NAS 8-2696-QPR-00002

SECOND QUARTERLY PROGRESS REPORT
PERIOD ENDING DECEMBER 31, 1964

RESEARCH & DEVELOPMENT ON FUEL CELL SYSTEMS

Contract No. NAS 8-2696

Prepared for:

National Aeronautics and Space Administration
George C. Marshall Space Flight Center
Huntsville, Alabama 35812

GPO PRICE $ ______
OTS PRICE(S) $ ______

Hard copy (HC) 3.00
Microfiche (MF) .75

ALLIS-CHALMERS
RESEARCH DIVISION
MILWAUKEE, WISCONSIN 53201

FEBRUARY 26, 1965

NAS 8-2696-QPR-00002

RESEARCH AND DEVELOPMENT
ON
FUEL CELL SYSTEMS

Second Quarterly Progress Report
Under Modification Number 6, Contract NAS 8-2696
For the Period Ending December 31, 1964

Prepared for

National Aeronautics and Space Administration
George C. Marshall Space Flight Center
Huntsville, Alabama

Research Division, Department 3341
Allis-Chalmers Manufacturing Company
Milwaukee, Wisconsin

Approved: J L Platner
J. L. Platner
Program Manager

TABLE OF CONTENTS

FOREWORD

This is the second quarterly report submitted after Modification Number 6, to Contract Number NAS 8-2696. The report covers the technical progress of "Research and Development on Fuel Cell Systems" for the period of October 1, 1964 to December 31, 1964.

Work under this contract is being performed by the Research Division of Allis-Chalmers Manufacturing Company, Milwaukee, Wisconsin. Will Mitchell, Jr., is the Director of Research. Dr. Powell A. Joyner is the General Manager of the Space and Defense Sciences Department of the Research Division. A project type organization was formed to carry out the program specified in the contract. J. L. Platner, Program Manager, has direct responsibility for the management and technical aspects of the program. Program management includes: D. P. Ghere, Assistant Program Manager; Dr. J. R. Hurley, Manager, Systems Research and Development; P. D. Hess, Manager, Engineering; R. E. Lochen, Manager Fabrication and Testing; C. R. Martin, Manager, Quality Assurance; Gunnar Johnson, Manager, Business Administration; and, M. J. Knuijt, Program Planner.

SUMMARY

Work being performed under the terms of this contract are divided into the following three major tasks:

Part I	Tasks	- Research and Technology
Part II	Tasks	- Breadboard and Experimental Items
Part III	Tasks	- System Test Models

Part I Tasks - Work under this part of the contract is being done to advance the art of fuel cells in general, and specifically, to support the work being done under the other two parts. During this report period the following conclusions were reached, based on analysis of test programs completed or in progress:

(a) Tests to determine the quantity of KOH electrolyte for fuel cells indicate that for the centerline design a minimum of 15 cc of KOH per cell will be required.

(b) Evaluation of asbestos for electrolyte membranes has revealed a wide range in density in the asbestos. Preselection of membranes to fall within a selected density range will increase the uniformity of performance between individual cells.

(c) A computer program for thermal analysis of the fuel cell system has been evolved and is being used in direct support of the Part III effort.

(d) A computer analysis has shown that the proportional controller used to regulate the reactant pressure is stable over the operating range of the fuel cell and will provide satisfactory performance.

Part II Tasks - These tasks cover the evaluation of breadboard models of fuel cell systems built to current (August 1964) technology. The following major achievements under this part of the contract have been made:

(a) An existing 1.5 KW breadboard system was refurbished into a 29 volt, 1.8 KW system. To date, this unit has successfully logged 404 hours of operation under load, which is two times the contractual life for this early system.

(b) A second 29 volt, 1.8 KW breadboard system was built and delivered to MSC, Houston for their performance evaluation. To date, this unit has successfully logged 500 hours of operation under load, which is two and one half times the contractual life for this early system.

(c) A third 28 volt, 2.0 KW breadboard system is being constructed for in-house testing in support of Part III Tasks at Allis-Chalmers.

Part III Tasks - These tasks cover the building of a number of 2 KW fuel cell system models, with advanced fuel cell technology. The deliverable systems will contain flight-designed hardware and will have automatic, self contained controls.

This report discusses in detail the approach used to determine the optimum system design which will meet the contractual requirements.

Analysis of the performance test results of the breadboard systems was used in evolving the centerline design for Part III system models. The centerline design is broken down into its various subsystems. Each subsystem is discussed and described and its present design status is given in this report.

Engineering and development tests performed in support of the centerline design have lead to the following:

(a) Evaluation testing of a number of commercial "off-the-shelf" motor-fans has indicated that the Globe Model 19A751 motor-fan will meet the requirements for the secondary coolant subsystem of the first engineering models.

(b) An electronic temperature compensated vacuum regulator for the water removal cavity has performed satisfactorily during the performance tests of the breadboard systems. Two different mechanical-type regulators are also being evaluated.

(c) The variation in thickness tolerances of the various cell components has a direct relationship to the amount of compression required to seal the gaskets during the construction of a fuel cell module. Results of the compression tests were considered in evolving the centerline design.

An analysis of the present technical progress does not reveal any serious problem areas in the development program. Work under this contract is progressing on schedule.

INTRODUCTION

This report covers the technical progress accomplished under Modification Number 6 to Contract NAS 8-2696 during the period of October 1, 1964 to December 31, 1964.

The report is divided into the following three main sections corresponding to the Part I, II, and III Tasks defined in the modified contract.

Part I Tasks	-	Research and Technology
Part II Tasks	-	Breadboard and Experimental Items
Part III Tasks	-	System Test Models

For a detailed definition and explanation of these tasks, see the First Quarterly Report, NAS 8-2696-QPR-00001, revised January 20, 1965.

PART I TASKS

RESEARCH AND TECHNOLOGY

Quantity of KOH for Fuel Cells

A test series has been started using standard two-cell test units to determine the concentration and volume of electrolyte required for optimum performance.

Previous testing indicated qualitatively that cell performance was affected to a greater degree by electrolyte volume than by electrolyte concentration. For this reason great care was taken to determine the void volume of each test cell. It was then possible to compute quite accurately the electrode saturation (fraction of electrode voids filled with electrolyte) for each test configuration.

The volume available for the constituents of a cell is determined by the spacer thickness and cut-out area. Cut-out area is defined as the area of the rectangle formed by the inner edges of the gasket. Figure 1 shows some of the pertinent configuration details of the standard test cells. Since the weight and absolute density of the cell constituents is known, the void volume can be obtained by difference. In a typical 0.2 sq. ft. centerline-type cell this void volume amounts to 25.0 cc. Of this amount, 15 cc normally is filled with electrolyte. The following table shows how the total void volume in this cell structure varies with the construction parameters:

Parameter	Variation in Parameter	Variation in Void Volume
Cut-out length	0.010"	0.05 cc
Cut-out width	0.010"	0.08 cc
Spacer thickness	0.002"	1.1 cc
Electrode	1 gram	0.1 cc
Asbestos weight	2.5 grams	1.0 cc

The most critical parameters are asbestos weight and spacer thickness. A group of 99 pre-cut asbestos membranes were weighed and a variation of 3.7 grams was found in the individual weights (14.3 to 17.0 grams). Because of the wide variation, the asbestos membranes for this test series were specified to lie within the range of 15.2 to 15.5 grams. In addition, the exact size and weight of all items involved in determining the void volume were recorded to aid in fixing the exact electrolyte saturation during the operation of the cell.

At the end of this reporting period the first two-cell test module (#53) had accumulated 94 hours of operation at 190° F and 100 ASF (40 amperes). The average cell voltage was 0.890. This test unit was constructed using Allis-Chalmers #15 SINAC silver cathodes, and 16 ml of 35% KOH in both the cell membranes and the water removal membranes. Future test cells in this series will be constructed using 15, 14, and 13 ml of 35% KOH in both asbestos membranes.

Asbestos for Electrolyte Membranes

A shipment of asbestos received from the same vendor under the same ordering specification was slightly different in color than previous shipments. It had a "yellowish" discoloration; previous shipments were white. An analysis report by the vendor indicated that the color was due to a minute amount of organic material (0.04%). In order to determine what effect the asbestos variation might have on cell performance, a two-cell test module was constructed, one cell with "white" asbestos, the other with "yellow" asbestos. The test unit was operated with both cells at a current density of 200 ASF. The individual cell voltages were then compared.

The test results indicated a slight variation in performance for the two cells. Further analysis of the asbestos revealed a slight difference in density; the yellow being lighter. Since both cells were wetted with the same amount of KOH electrolyte, it was concluded that the variation in performance was possibly due to the variation in asbestos density and the resulting difference in electrode saturation for the two tests. Subsequently, a density variation in both "white" and "yellow" asbestos sheets was discovered. Thus, for more uniform cell performance, the asbestos membranes would have to be preselected to fall within a narrower density range until manufacturing specifications could be upgraded.

Thermal Analysis Program

A computer program to analyze steady state thermal characteristics of the fuel cell module has been written and checked out. This program will be used to determine cell temperature profiles, heat exchanger specifications, and the effect of various secondary coolants on module performance. In order to simplify the computation, the following assumptions were made:

(a) Heat is produced uniformly over the active area of the cells.

(b) Flow of heat to the cooling fins is one-dimensional.

(c) Steady state conditions exist.

The analysis is conducted by the program in three successive stages:

(a) Computation of the amount of waste heat to be rejected.

(b) Computation of the temperature profiles of the plates.

(c) Computation of the thermal conditions in the coolant loop and the pressure drop.

Figure 2 shows cell temperature profiles for two plate designs having slightly different groove structures. These results were obtained from the computer program.

Advanced Control Techniques

Previous experience gained during the testing of both single cells and large modules pointed out the importance of satisfactory control of the operating conditions. Eventual cell failures and unexpectedly high voltage degradation rates could, in many instances, be attributed to severe upsets in the cell operating conditions. The most critical variable was found to be the effective electrolyte concentration within the cell while under load. This parameter would be influenced mainly by the water removal subsystem and controls.

Because of the importance of proper control methods, an analytical study of the control problem was started. The end result of the studies should be an optimum controller or at least an improvement over the initial controls used on early modules.

Before controls could be analytically designed, the relationships between the variable parameters of the system had to be determined. In order to accomplish this, the functional relationships between system variables was evolved in block diagram form as shown in Figure 3. Each block on the diagram represents a mathematical function relating the output of the box to its input. If the true functions represented by the blocks could be approximated by linear relationships with sufficient accuracy, subsequent control analysis would be facilitated.

The functional relationships that were found to be linear with sufficient accuracy are crossed out in Figure 3. The remaining functions have yet to be analyzed. The control techniques to be used for these parameters will depend upon their relative effect on the output voltage.

Proportional control of pressure has been investigated as a mode of operation for the reactant control subsystem. The analysis indicated that this method of control would be acceptable. There was a possibility that a periodic reactant demand due to feeding an electrical inverter might produce resonant pressure waves within the reactant cavities. Such a resonant condition could produce undesired mechanical vibration. An analysis of this condition is being conducted.

A linear analysis of the relationships affecting the fuel cell temperature is being conducted. If sufficient accuracy cannot be attained with linear approximations, a non-linear analysis will be required.

PART II TASKS

BREADBOARD AND EXPERIMENTAL ITEMS

The major accomplishments under Part II Tasks during this report period can be divided into the following three main categories:

(a) The Allis-Chalmers 28 volt, 1.5 KW breadboard system was refurbished into a 29 volt, 1.8 KW system, and subsequently performance tested for 404 hours under load. (This refurbished unit is henceforth identified as "Allis-Chalmers Breadboard Number 1 or A-C BB # 1").

(b) The assembly of the MSC 29 volt, 1.8 KW system was completed. The system was delivered to MSC and technical assistance was furnished during the initial testing phases at MSC.

(c) Construction of a second breadboard system was begun. This system, rated at 28 volts, 2 KW will be used for in-house testing in support of Part III Tasks. (This second unit is henceforth identified as "Allis-Chalmers Breadboard Number 2 or A-C BB #2").

Allis-Chalmers Breadboard Number 1 (A-C BB #1)

Construction details of the refurbished fuel cell system are shown in Table I. Following the completion of the assembly of A-C BB # 1, checkout tests were performed to evaluate the breadboard thermal control subsystem. After the checkout tests were completed a system performance test was initiated using the load profile shown in Figure 4. Figure 5 shows the test setup and Figure 6 shows system flow schematic for the fuel cell system. Initial operating conditions were as follows:

Hydrogen pressure	-	22 psig
Oxygen pressure	-	22 psig
Operating temperature	-	190 to 200° F.

Performance Summary - Test Log - The objectives of the performance testing, in addition to verifying the design features, were to determine recommended operating conditions for the MSC breadboard fuel cell system. Throughout the course of the test, experiments were conducted to determine:

(a) The purge requirements of the system, and

(b) The equivalent KOH setting for the vacuum controller.

At 63.5 hours of operation the oxygen pressure was increased from 22 to 27 psig. This psi differential pressure between the oxygen and hydrogen reactant gases was maintained for the duration of the performance test.

At 198 hours, a special six-hour run at 52 amperes was started at the request of NASA representatives. Output during this period was approximately 1580 watts at 28.8 volts. The average voltage per cell was 0.823 volt at a current density of 128 ASF.

Normal performance testing was continued until the system was shutdown for inspection after 209 hours of operation. (200 hours of operation was the contractual requirements for this early system). No serious defects were found and the system was put back on test. It was run an additional 195 hours on the same load profile for an accumulated time of 404 hours under load.

Results and Conclusions - Figure 7 shows the performance characteristics of the Allis-Chalmers Breadboard Number 1 fuel cell system. After 400 hours of operation, the maximum degradation was observed at the 65 amperes (162.5 ASF) load. It gradually increased from 4.5% immediately after application of the load to 13% after 1.5 hours of continuous operation at this load level. However, at 40 amperes (100 ASF), which is 67% of the design load, and is the highest steady load level on the profile, except for two higher short peaks, the degradation was only 1.5% after 400 hours of operation.

As a result of the purge and equivalent KOH setting experiments the following values for these requirements were established for operating the MSC breadboard.

(a) Purge - 6 seconds duration every 6 minutes at 1.5 times the stoichiometric consumption

(b) Equivalent KOH setting for the vacuum controller - 33%

A-C BB #1 was the second fuel cell system of this type to be built and operated. The following significant accomplishements should be noted:

(a) 404 hours of operation under the specified load profile exceeded the contractual requirements for the early breadboard by 204 hours.

(b) This was the first 29 volt fuel cell system of this type built with silver cathodes. Silver cathodes contributed to a significant increase in the fuel cell system life.

(c) The Thermal Control and Conditioning Subsystem performed well using helium as the secondary coolant. An improvement in duct design and fin spacing resulted in a more uniform temperature distribution within the fuel cell module.

(d) The use of inert helium, instead of previously used hydrogen, as the secondary coolant greatly increases the system safety.

Initial cell performance was adequate but lower than expected. At 63.5 hours of operation the oxygen pressure was increased from 22 to 27 psig. An immediate improvement in cell operation was observed. The need for increased oxygen pressure was attributed to the relatively dense cathode. This 5 psig differential pressure was maintained for the duration of the life test.

Some difficulty was experienced during system operation at the low load levels (470 watts). Hydrogen leakage into the water vapor cavity occurred five times during the test. Two of the leaks were attributed to operator error. In addition, the automatic KOH controller was removed from the system at various times during the test for readjustments or design modifications. During these periods the system performance was more erratic which probably contributed to some of the unidentifiable causes for the remaining hydrogen leaks. These conclusions are substantiated in part by the subsequent 500 hour operation of the MSC breadboard which incorporated the use of automatic vacuum controller almost exclusively and did not experience any hydrogen leakage into the water vapor cavity.

In all cases the leaks in A-C BB #1 during the first 404 hours operation were resealed by closing off the vacuum cavity and allowing the system to accumulate extra moisture. It was not necessary to remove the system from the load.

After 404 hours of operation on the load profile, which represented approximately 423 hours at temperature, leakage from the hydrogen reactant cavity into the water removal cavity in cell numbers 14 and 15 was discovered. It was not possible to seal these leaks by the method previously employed, so the system was removed from test.

Resoaking the water removal membranes of all the cells with electrolyte was tried without success. The fuel cell module was then separated and the two faulty cells were replaced without disturbing the remainder of the module. Special fixtures were manufactured to separate the stack and replace the faulty cells. Figure 8 shows the method of stack splitting.

The defective cells removed from A-C BB #1 were disassembled and inspected. No visible defects were discovered. Further tests are being conducted to determine if any flaws exist in the magnesium plates which could have caused the leakage. In addition, chemical tests are being run on the elastomer gaskets, and on selected areas of electrodes and asbestos for possible corrosion products and/or impurities which may have accumulated during the test.

A-C BB #1 fuel cell system is presently being used to conduct special non-operating tests to determine the resistance of the secondary coolant flow path.

MSC 1.8 KW Breadboard

The remaining steps in the fabrication of the MSC breadboard fuel cell system were completed during the reporting period and acceptance testing by Allis-Chalmers was started on October 9, 1964.

The construction of the MSC unit was the same as that of A-C BB #1 as detailed in Table I, with the exception that improvements were made based upon results of experiments conducted on A-C BB #1. The amount of KOH added into the water removal membrane was increased for the purpose of broadening the equivalent KOH control band. The MSC breadboard fuel cell system with the canister removed is shown in Figure 9.

The acceptance test consisted of operational tests to verify design conformance and quality of workmanship. Included were pressure and leak tests, thermal tests, and load tests. Load testing was conducted using a load profile as shown in Table II.

Shortly after being loaded, cell section #14 showed signs of being weak and when load segment 2 was applied, the voltage of this cell decreased to 87.3% of the average of all the other cells. Normal corrective procedures did not remedy this condition and the unit was shut down. The stack was separated, and cell section #14 was removed and inspected. There was evidence of lack of sufficient electrolyte in the cell section but the cause for the low performance was not evident. Cell section #14 was rebuilt using the same hydrogen and oxygen plates and new spacers, gaskets, frames, electrolyte holders and electrodes. The rebuilt cell section was re-installed into the stack and it performed satisfactorily throughout the remainder of the test.

Control optimization experiments were run and the best equivalent KOH concentration for the vacuum controller was determined to be about 31.5 percent.

After successfully completing the acceptance tests at Allis-Chalmers the fuel cell system was delivered to MSC. The on-time delivery was accomplished 2.5 months from contract go-ahead.

The unit was received at MSC, Houston, on November 2, 1964 for evaluation by the Thermochemical Test Branch for the Power Generation Branch, Propulsion and Power Division. The broad objectives of the test program at MSC are:

(a) In-house verification of the feasibility of this fuel cell concept for possible application to the various MSC space mission requirements, and

(b) To assess, early in the contract, problem areas that may exist which would require particular attention in the development program.

Testing at MSC was started on November 10, 1964. The flow schematic diagram for the test setup is shown in Figure 10. Figure 11 shows the module and subsystem arrangement, and Figure 12 shows the control panel and interface board. The unit was operated to the specified duty cycle as shown in Figure 13, on a six-days on, one-day off basis for two complete duty cycles and an accumulated load time of 241 hours.

Allis-Chalmers personnel provided assistance to MSC during this period of operation. The remainder of the testing was accomplished by MSC personnel.

The unit was again activated on November 30, 1964 and operated for a third complete cycle (421 hours of accumulated load time); and operation was continued until a total load time of 500.7 hours was accumulated at MSC. During this total operating time at MSC three duty cycles were completed and experiments relating performance to electrolyte concentration and temperature, as well as various purge modes, were accomplished. The total energy produced during this time was approximately 430 KWH.

At 500 hours of operational life the test was terminated to assess the data. Additional operation is planned to start in February 1965 and to continue on an uninterrupted basis until the useful life is extracted from the unit or 1000 hours is reached. The exact definition of continued testing will be tempered by analysis of the results of the first 500 hours of operation.

Performance characteristics obtained during tests at MSC are shown in Tables III, IV, and V, and Figures 14 and 15. A detailed description of the testing and performance has been prepared by MSC.

Results and Discussion - The fuel cell system as a whole performed well and exceeded the contractual August 1964 current-technology goal of 200 hours by 2.5 times. Five hundred hours of successful operation at this point in the program is considered to be a significant accomplishment.

(a) The fuel cell module performed satisfactorily at water removal membrane KOH concentration varying from 28 to 38%. A few cell sections were sensitive to changes in KOH concentration. This sensitivity was determined to be caused primarily by variations in asbestos uniformity. Preselection of asbestos membranes should eliminate this effect.

(b) Output voltage variation in the order of 100 to 900 millivolts was determined to be related to purge manifolding and purge mode. Intermittent manual purges were necessary to supplement the programmed purge mode. The purge mode was believed to be related to the density of the cathode.

(c) Irreversible cell failures do not appear to be a problem with the fuel cell. This conclusion is substantiated by an unusual occurrence that took place during a condition of high load (65 amperes) coincident with a purge. Cell section number 1 suddenly reversed during a purge. Corrective action was taken and operation returned to normal. Performance was equal to previous performance. No explanation was readily apparent for this occurrence. It was noted that when the purge solenoids opened, the sudden surge of flow sometimes forced the flowmeter float to the top and obstructed flow which would cause a corresponding pressure drop in the module. It appeared that this effect may have been sufficient, particularly at high load, to drop the hydrogen pressure in the cell section sufficiently to cause it to reverse. Operation for the remainder of the time was normal.

(d) The module performance was approximately 1.8 KW at a minimum of 27 volts through a load time of 241.3 hours at MSC. At the end of 500 hours at MSC, 1.4 KW was achieved with a 27.0 volt output. It should be noted that at two-thirds design load (1.2 KW), the value of the average load, the voltage was only reduced from 30.5 volts to 29.0 volts during the 500 hours of operation.

(e) The pH level of the product water varied from 9.5 to 12.5. The desired range is from 7.0 to 9.0. It is felt that additional work in the area of uniformity and modification of cell components will rectify this situation.

Allis-Chalmers Breadboard Number 2 (A-C BB #2)

Construction of this fuel cell system in breadboard form has started. This system will be used to verify the advances in technology that are expected to provide for a growth in power density of fuel cell systems. In addition, this system will be used as an engineering test bed in support of Part III Tasks of the program.

The significant design modifications of this system include the use of a new and improved silver cathode, Allis-Chalmers HYSAC #8, and 20 mil electrolyte membranes. The improved capacity of this new cathode and the use of the thinner electrolyte membrane allowed the number of cells in the module to be decreased from 70 to 62 cells (31 cell sections).

The rating of A-C BB #2 fuel cell system is 28 ± 2 volts at 2 KW.

PART III TASKS

SYSTEM TEST MODELS

The Part III Tasks include the development and construction of eight advanced 29 volt, 2000 watt fuel cell power systems for testing and evaluation. These advanced systems will include all necessary controls for self-sustained operation. Two types of power systems will be delivered. The open loop type will be designed to vent the by-products of the fuel cell reaction, heat and water vapor, directly into space. The closed loop type will be designed to provide a source of potable water. Testing and evaluation will be performed by both NASA and Allis-Chalmers.

The first part of this program is concerned with evolving the centerline design of the first two verification systems. This design is based upon the breadboard systems technology. The first system to be built (Number 5) is for in-house testing at Allis-Chalmers. The second system to be constructed (Number 2) will have a water recovery subsystem and is also for in-house testing.

System Design Analysis

A preliminary task in the evolution of the systems centerline design was the completion of a system design analysis. The purpose of this analysis was to define the design philosophy for the Part III systems utilizing the engineering effort and the results of the design verification, of the breadboard systems.

The optimum size of a fuel cell module, the power source of a fuel cell system, for a given application depends upon many factors. These factors include:

(a) A specific electrochemical situation (specific electrodes, reactants and electrolyte).

(b) Relative geometrical shapes of the system.

(c) Auxiliaries.

(d) Size of the fuel cell.

If it is assumed that the first three factors are fixed by the design, then the size of the fuel cell remains as the only pertinent variable factor. This parameter can be conveniently expressed as the total effective cell area.

Assuming that a fuel cell power system, consisting of both power module and fuel supply, is optimum when it has a minimum possible mass, it then can be shown that this minimum mass is determined by the power level and operating time. The rating for the power module can be defined in amount of mass per unit power, for example, pounds per kilowatt. Similarly, the potential of the fuel supply can be rated in energy per unit mass, for example, kilowatt hours per pound. Comparing these rating quantities for optimum systems, it will be found that the longer the operating time, the smaller the power density rating of the fuel cell module will be, and the larger will be the net energy density of the fuel.

Figure 16 shows a simple example involving three hydrogen oxygen fuel cell systems. The three mission requirements arbitrarily selected are to provide 2 kilowatts for 100, 300 and 1000 hours respectively. The small module (80 pounds) happens to be the optimum size for the 100 hours operating period, the medium module (110 pounds) for the 300 hour mission, while the weight of the optimum module size for the 1000 hour mission turned out to be 166 pounds. The example was formulated with the assumption that cell modules of any size would always weigh seven pounds per square foot of effective area. Purge requirements, fuel tankage, and parasitic power demands were not considered in the example since they would not alter the basic relationships displayed here.

Figure 16 also shows how the three modules would perform on missions of a duration other than that for which they were optimized. When used on too long a mission, the penalty in increased fuel mass overshadows the saving due to the smaller module. Conversely, when used on a mission of a shorter duration than the optimum, the saving in fuel mass does not compensate for the larger than optimum size of the fuel cell module. For the long duration missions, the net cell operating voltage is far more important than the weight of the module. To pick up an average gain of but 3 millivolts per cell by adding, say three pounds of copper to the current collection network in the optimum 1000 hour modules, the addition would be well worthwhile since a saving of five and one-half pounds of fuel would be realized.

The present Allis-Chalmers fuel cell system, nominally rated at 2 kilowatts, would lie somewhere between the small and medium sized units shown in Figure 16. The present fuel cell unit would appear very much like an optimized 2 kilowatt system for a mission of a few hundred hours duration. However, if the same unit were operated at about half that current density, it would appear very much like half of the 1000 hour optimum system shown in the example.

The factors just described, that is, trade-offs between fuel cell weight and fuel weight as the desired duration of operation changes, are important but are not by any means the only considerations in sizing a fuel cell power system to a given application. The volt-ampere characteristics of fuel cell devices change with time, generally dropping off in a fashion indicative of a rising internal impedance. In addition, a requirement is often placed on the inherent voltage regulation of a fuel cell system. The electrical design goals for the Allis-Chalmers fuel cell system include such requirements. The pertinent ratings are:

Nominal power	2000 watts
Overload capability	3300 watts (30 seconds)
Low power voltage	Less than 31 volts at 800 watts
High power voltage	More than 27 volts at 2000 watts

Generally, the voltage regulation requirement will be one of the major factors in determining both the cell design area and the number of sections to be used in series. When an electrical power source is operated at or near its peak power level, voltage regulation is very poor since, in the vicinity of the power peak, small changes in power output result in substantial changes in terminal voltage of the device. Thus, good self-regulation of a constant impedance power supply is essentially impossible near peak power. Two basic means are available to circumvent this difficulty.

(a) Design the device so that it is not an apparent constant impedance device. For example, a fuel cell system could be designed to produce its ultimate peak power at a desired voltage. To secure regulation and prevent excessive voltage rise at low or zero load, the apparent source impedance may be increased by reducing module temperature or throttling the reactant flow to maintain the terminal voltage at an acceptable level.

(b) The apparent source impedance may be reduced to a comparatively low value. Here, however, the peak power capability would be greatly increased. In a fuel cell system this would be accomplished by increasing the cell area and operating in the low current density region.

At the present time the second method is being considered, since the first method would require complex control devices and cell operation in yet untried and unproved regions.

The fuel cell power system which will be evolved during the course of the development program will be considered as modular building block applicable to a range of mission requirements. The basic unit of the fuel cell power systems will be a canister containing a single fuel cell module and the associated support subsystems. The fuel cell module will consist of 32 to 34 series connected sections. The sections will be comprised of two parallel connected fuel cells each having an active area of 0.2 square foot.

Particular attention will be given to the two following system arrangements.

(a) For missions of duration less than 400 hours, the power system will consist of a single fuel cell module.

(b) For missions of duration up to 720 hours, the power system will consist of two parallel connected modules. These modules will be nearly identical to the modules used singly for short missions. Lower power fans may be used in the module cooling subsystem due to the lower rejected heat load. Increase in fuel cell system volume and weight will be traded for reduced fuel consumption due to improved efficiency, longer operating time within voltage regulation specifications, and enhanced reliability.

Table VI shows the present capability of the two-canister, long mission power system. The numbers are derived from data and estimated properties of the Allis-Chalmers breadboard. The output of the system would be slightly over the 31 volt limit at the 800 watt level at initial operation.

If it is optimistically assumed that rate of degradation is directly proportional to power level, and that the volt-ampere characteristics of the two canisters at 720 hours are identical to the Allis-Chalmers breadboard at 360 hours, then all the requirements can be met by a 32 series section design. Thus, in all likelihood the 720 hour mission requirements can be met with two parallel canisters and little or no improvement in electrode performance.

With some improvement in net cell performance, the requirements could be met with a single canister. The required volt-ampere curves are shown on Figure 17. The cell volt-ampere curves must fall within the enclosed areas during the entire lifetime of the unit in order to meet regulation requirements.

The allowable design areas apply equally well to the 400 hour duration missions. However, the limitation on degradation rate is not quite so stringent. The V-J curve must remain in the closed area for only 400 hours rather than for 720 hours before drifting out of the bottom.

Based on the voltage regulation requirements the rating of the present Allis-Chalmers breadboard module with a 34-section design would be 29 ±2 volts at 800 to 1400 watts (90 watts parasitic power) and 2140 watts overload capability at 21 volts.

An improvement in average cell voltage of approximately 60 millivolts at 160 ASF will be required to attain the 2000 watt capability in a single canister of the present size. This gain can be accomplished by a combination of several improvements.

(a) A higher performance electrode system, such as HYSAC silver, could be used with an expected gain of 35 millivolts at 160 ASF.

(b) Performance may be improved by using 0.020" rather than 0.030" thick asbestos. Expected gain would be 35 millivolts at 160 ASF. Module length and weight would be slightly reduced also.

(c) On the order of 5 millivolts may be gained by improved methods of electrical connection to the cells.

(d) Improvements in electrode and asbestos uniformity may be expected as preparation processes evolve from the original laboratory procedures. Gains to be expected here may be of the order of 10 millivolts.

(e) It is assumed that observed rates of cell degradation could be cut in at least half, to 0.07 millivolts per hour at 160 ASF, by using improved techniques of thermal and moisture control. Observations of the Allis-Chalmers breadboard revealed that a large portion of the permanent degradation occurred in sudden jumps and was due to severe upsets in moisture control.

In summary,

(a) The 720 hour mission requirements can be met with present breadboard system number 1 volt-ampere characteristics and centerline design (plate area 0.2 ft^2) when two canisters are used in parallel.

(b) An alternate approach would be to redesign the cell plates for a larger area and thus achieve a 2000 watt capability in a single canister with present volt-ampere capability.

(c) Achievement of a 2000 watt capability in a single canister (plate area 0.2 ft^2) will require growth in cell capacity within attainable limits.

Considering the above alternatives, it is felt that it will be possible to surpass the requirements specification with the plate design frozen at 0.2 ft^2 by relying on improvements in the areas just cited.

Centerline Design - 2 KW System

Fuel Cell Power Systems Requirements - Before designing a fuel cell power system for use in space applications, the requirements of the system must be established. For the present program these requirements are shown in Table VII. These requirements are rather general and can be considered to include the major requirements of several types of missions.

The "open-loop" system exhausting the by-product water directly to space is more generally applicable to short or unmanned missions. The "closed-loop" systems which recover and collect the by-product water will fit into the longer manned space missions.

Interface and Subsystem Description - The interface relationship between the fuel cell power system and the test laboratory or a space vehicle is shown in Figure 18.

The power system is shown in schematic form in Figure 19 and has been divided into a number of functional subsystems to make use of subassembly techniques wherever possible. Components grouped as units simplify checkout, testing and maintainability.

The main subsystems are the fuel cell module, the thermal control, the reactant control, the electrical control, the moisture removal and water recovery, the canister and support, and the instrumentation. A short description of these subsystems follows:

(a) Fuel Cell Module - The Fuel Cell Module (FCM) will consist of 33 two-cell sections electrically connected in parallel. The sections will be electrically connected in series to form a 66 cell stack for the nominal 29 volt module. Each cell will have a water removal membrane facing the hydrogen electrode and will have an effective area of 0.20 ft^2.

(b) Reactant Control and Conditioning Subsystem - The reactant control and conditioning subsystem (RCCS) shall meter, control and monitor the pressure of the gaseous oxygen and hydrogen reactants utilized by the Fuel Cell Assembly (FCA). Provisions will be made to safeguard against excessive pressure differentials downstream of the regulators between the two reactants entering the FCM.

Reactants will be supplied to the RCCS within the temperature range of 0° F to 150° F and pressure range of 100 psia to 400 psia. The reactants will be raised to 195° F operating temperature within the canister.

The pressure of both reactants will be reduced by the reactant pressure regulators to approximately 35 psia. A purge timer will control the solenoid operated purge valves on the basis of the ampere-hours load on the module. A schematic diagram of the RCCS is shown in Figure 20.

Design Status - Design specifications have been prepared for all of the control components in this subsystem and sent to tentative suppliers for quotes. To date purchase orders have been issued for:

1. Reactant inlet solenoid valves
2. Reactant pressure regulators
3. Reactant purge solenoid valves
4. Water removal solenoid valves
5. Coolant control solenoid valve.

Delivery of these items is scheduled for February and March of 1965.

(c) Thermal Conditioning and Control Subsystem - The thermal conditioning and control subsystem (TCCS), shown in schematic form on Figure 21, will raise the FCA temperature from 0° F to 185 °F ± 5° F in one hour and will maintain a temperature of 195 ±5° F during operation. To accomplish this a secondary coolant of helium will be circulated over the module fins and through a heat exchanger, by means of two axial fans and a system of ducts and baffles, as shown in Figure 22. The secondary coolant system is completely contained within the canister.

A primary liquid coolant will be circulated through the heat exchanger in the canister to maintain the temperature of the secondary coolant. The flow of the primary coolant will be controlled by means of a solenoid valve and a temperature controller. A relief-type valve will be used to by-pass the flow when the solenoid valve is in the closed position.

Electric heaters will be used to heat the circulating gas during the startup period.

Design Status - A number of "off-the-shelf" motor-fan units have been tested to determine their compatibility with the TCCS design. As a result of these tests a motor-fan has been selected to be used on systems number 2 and 5. This motor-fan requires only approximately one-half of the power required by the present breadboard system units. The new motor-fans are scheduled for further evaluation in breadboard system number 2.

Many of the other components required within the TCCS will be very similar in design to the items used in the early breadboard systems tested both at Allis-Chalmers and MSC. Additional items such as heaters, relief valves and thermostats are presently being investigated.

(d) Moisture Removal Subsystem - The moisture removal subsystem (MRS) controls cell cavity pressure and the removal of product water in a fixed relationship to cell temperature, and, thereby regulates the electrolyte concentration as established by the Static Moisture Removal Concept. This is accomplished by means of a solenoid valve and an electronic controller that senses both cavity pressure and cell temperature and modulates the valve to establish the proper operating level. The product water vapor can be vented to space or to a water recovery subsystem.

Design Status - The design and verification of this controller was accomplished early in the program. Units were used on both the Allis-Chalmers breadboard system number 1 and the MSC breadboard system.

(e) Electrical Monitoring and Control Subsystem (EMCS) - The electrical monitoring and control of the major electrical subsystem components is shown in block diagram form in Figure 23. This subsystem shall consist of all the electrical components required to start, stop, and maintain regulation and proper operating conditions of the fuel cell assembly.

The EMCS will be capable of three modes of operation, Manual, Standby and Auto, and will have three function switches: Start, Load, and Stop. Manual override switches, active in the manual mode, will be provided for all major functions.

Design Status

Temperature Controller - Design details have been formalized for an incipient demand type FCA temperature and coolant controller. When applied to a thermo-system with a 6 minute maximum time constant and a one minute variable duty cycle error correcting control element, this controller has successfully maintained temperatures constant within ± 1° F.

Circuitry has been developed so this unit can control a 1 KW, 120 volt, 60 cycle heater. For this application a static SCR switch and a zero-crossing pulse control have been incorporated into the controller circuitry in order to minimize radio frequency interference.

Purge Control - Design of a purge control unit, which will relate ampere-hours and rate of voltage decay, is in progress.

Circuit designs for various power and signal conditioning devices to be used within the EMCS are also in progress.

(f) Instrumentation Subsystem - The instrumentation subsystem shall be integrated into the FCA and EMCS and shall include the instrumentation necessary to measure the performance characteristics of the fuel cell power system. The readout for the necessary sensors will be accomplished by laboratory facilities. However, sensors selected should be capable of integration into flight-type readout equipment at a later date.

The instrumentation interface relationships between the test facility, the electrical subsystem and the fuel cell assembly is shown in block diagram form in Figure 24. The following power system performance parameters will be measured:

(1) Total output voltage

(2) Individual cell voltages

(3) Current output

(4) Pressures: (6 gaseous and 2 liquid)

(5) Temperatures: (18 points - surfaces, gases, liquids)

(6) Valve and relay positions: (12 approximately)

(7) Fan RPM

(8) Inverter output voltages

(9) Inverter output currents

(10) Inverter input d.c. current

(11) Vibration: At least three internal vibration sensors shall be provided internally in the test model FCA's. These sensors shall not be removed from the assembly.

Design Status - The interface requirements between the canister and EMCS have been defined and the interface connectors, to be mounted on the respective portions of the canister, have been selected.

(g) Water Recovery Subsystem - The water recovery subsystem (WRS) will modify the "open-loop" fuel cell power supply system to the "closed loop" design. It will receive the product water from the FCA in the vapor state and will provide for recovery, accumulation, storage and release of this product as potable water.

The WRS centerline design approach is based on a static condenser-separator which has been satisfactorily tested in the laboratory during the development of the dynamic vapor pressure control method.

Provision will be made for accumulating the water in the accumulator tank and either manually or automatically transferring it to the storage tank. A pH sensor located in the accumulator with a readout range of 6.0 to 9.0 pH will cause the water to be dumped to space if its pH exceeds acceptable values.

Design Status - The static condenser has been designed and components fabricated. Testing is scheduled to begin on this component in January. Design and selection of components for the rest of the subsystem are in progress.

(h) Canister and Support - The canister and support, shown in Figure 25, consists of a cylindrical portion, end bell, and suitable brackets that attach to the flanges of the cylindrical part of the canister through thermal insulating blocks. The canister supports and encloses the FCM and the TCCS. The RCCS attaches to the support brackets and is thereby isolated from the canister except for the connecting tubing.

The approximate dimensions of the canister are 13-3/4" in diameter, and 30 inches long.

Engineering and Development Tests

Secondary Coolant Motor-Fan - In an effort to select the most suitable "off-the-shelf" motor-fan for A-C BB #2, and the early Engineering Test Systems number 2 and 5, a test program was initiated to determine the performance characteristics of several available motor-fan units. To date the units tested are:

Joy Model AVR 29-2101363	S/N AA-23084
Rotron Type 528 YS	S/N 809468
Rotron Type 387 JS	S/N 855326
Globe 19A751	AC No. 1251-1
Globe 19A751 (modified by addition of inlet flow diffuser)	AC No. 1251-2
Globe Multistage Type 19A921	AC No. 1629-1
Pesco Products Type 185027-011-01	S/N 159

The performance characteristics of these motor-fan units are shown on figure 26.

From measurements made on secondary helium gas cooling system on A-C BB #1 and the MSC breadboard systems, an acceptable fan performance rating of approximately 60 CFM at a static head of 1.1 to 1.2 inches of water was established. Based on the performance characteristics of the above fans, a Globe Type 19A751 motor-fan was selected to be used on the first Engineering Test Systems.

Temperature Compensated Vacuum Regulator - The Part III systems centerline design specification presently specifies an electronic-temperature compensated vacuum controller to be used in the Water Removal Subsystem. As an alternate design approach a mechanical type temperature compensated vacuum regulator is being investigated. To date two different models of this component have been obtained. One model was designed and fabricated at Allis-Chalmers and the second was received from an outside vendor. These units are scheduled for initial tests in January.

Cell Compression Test - A series of tests were performed with single-cell units to determine cell component dimension tolerances to reduce the compression load required to effect seals and to properly seat the fuel cell plates against the cell spacers. It was found that a thickness variation of 4 mils could change the force required to seat the cell plates against the spacer by about 2 tons. This difference in force has considerable effect upon the design of the fuel cell module tie-bolts and end-plates.

Quality Assurance

Contract NAS 8-2696 requires organizing, implementing and managing a quality assurance program for the Part III Tasks. Further, it recognizes the research and technology nature of the work and the limited items to be tested, and therefore states that a formal quality assurance program is not justified.

Document NPC 200-3 is cited as a guide for a provisional program to assure quality components, good workmanship and inspection, organized procedures, and adequate documentation and records to assure reproducibility and reliable performance. However, emphasis on working closely with design efforts, rather than establishing elaborate testing and inspection programs is given as a primary step toward a reliable product.

The quality assurance program shall assure technical liaison, recognition and practical use of existing applicable documents.

Quality Assurance Program

Current Status - As mentioned previously, the contract specifies that the quality control program be applied to Part III Tasks. However, applicable systems and procedures have been applied to Part I and II activities in areas where they can clearly benefit these two parts of the program.

Program Progress - The following list of activities have been completed and are now being implemented in the program.

(a) Material, parts and test apparatus of prior activities have been identified, inventoried and isolated in a controlled area. Their suitability and availability for future research and technology efforts has been ascertained.

(b) Material control functions and receiving activities have been formalized; storage areas have been controlled; and ledger records have been established.

(c) Inventory lot control has been established for defining use and source traceability of all critical materials involved in research tests or cell assemblies.

(d) Procurement requisition control procedures have been established to enforce specification usage in purchase information.

(e) Apparatus record files have been established to provide property status and location. Records will provide insight into possible affect of apparatus on test data.

(f) Inspection instruction procedures have been established.

(g) An information retrieval index of government documents (specifications, drawings, standards) has been established on a simple IBM card format to effect rapid updating of index for newly acquired information.

(h) Component activity logs have been established as part of the Material Control Ledger, to accumulate test and service information for later reliability analysis application. The log will also provide current status reporting of components "held" pending completion of verification and/or acceptance tests.

(i) Design specification review and sign-off procedures have been established. These procedures require engineering, test/fabrication, quality control, and project administration approvals.

(j) Drawing review and sign-off procedures have been established. Drafting supervisor, engineering, and quality control approvals are required.

(k) Test Authorization and Test Procedure Specification approval sign-off procedures have been established. These procedures require the approval of engineering, test/fabrication, quality control and project administration.

(l) Process investigations plating, welding, catalyzing, etc., have been initiated.

(m) Configuration logs for power system assemblies have been designed and implemented.

(n) Unsatisfactory performance reporting has been formalized and implemented.

(o) Test systems descriptions and schematic drawings of gas and electrical circuits have been formalized and are being kept current with laboratory construction progress.

(p) Calibration control procedures, records and equipment are in readiness.

Current Quality Assurance Activities

A few examples of current Quality Assurance activities are:

(a) In logic circuit development, the use of low cost commerical parts, mounted on vector-boards is being allowed for feasibility experiments. Further work will include a search for NASA approved parts suitable for use in the circuits, and an investigation of NASA proven and accepted mounting and packaging schemes for the logic circuits.

The design group leader on logic circuits met with MSFC engineers at Huntsville to become familiar with sources covering the above information. Upon his return the following items were implemented:

(1) Revised the circuit designs to maintain a common ground polarity compatible with space vehicle standard practices.

(2) Determined that selection of applicable parts from preferred parts listings would not compromise designs.

(3) Changed the mounting and packaging effort from an acceptable exhibit toward practical direction, using MSFC packaging models as a basic guide.

As a result the verification effort is accomplishing more than just improving a circuit function.

(b) The process of tungsten-inert gas (TIG) welding of magnesium has been checked out. X-rays of representative welds on canisters used on Part II Tasks canisters indicate tungsten inclusions and lack of weld penetration. Such indications are not acceptable.

This condition will be eliminated through use of welding equipment with better welding current regulation and some changes in techniques. Qualification test pieces are now in process. An evaluation of these pieces is being made by the X-ray Laboratory Staff. NASA specification references have been used. Allis-Chalmers X-Ray staff is qualified by both Navy and Air Force agencies to conduct qualification tests and evaluations.

(c) A sampling of twenty nickel plated cell support plates used in Part II Tasks were checked in dilute acetic acid for plating pinholes with the following results:

Number of Pinholes per Plate	Number of Plates
Over 10	2
6 - 10	4
1 - 5	10
0	4

Such pinholes apparently have no noticeable effect on the immediate performance of fuel cells. Their effect on long term storage or operation is not known. Nevertheless, the cause was traced to breaking-off of minute nickel plating growths which were forming on the sharp machined slot edges. An operating change, to include a mild sandblasting operation prior to plating, rounded these slot edges slightly and plating growths at this location were controlled. A sampling of twenty support plates from a lot manufactured after this change gave the following results:

Number of Pinholes per Plate	Number of Plates
1 - 5	3
0	17

Quality Control records and accumulated material history are initiating further research efforts on a number of materials. The "drop-outs" or residue of fabrication operations which have been retained and stored with historic identification are now valuable in correlating present research effort with past performances.

The effect of variables in gasket, spacer, magnesium sheet, asbestos membrane and electrodes is being restudied and re-evaluated.

ANALYSIS

This section of the report interprets the present technical progress of the program, and analyzes the accomplishments and problem areas in light of the program objectives.

Part I - Research and Technology

The intent of this part of the program is to provide progress in general fuel cell technology and to support the development of the 2 KW fuel cell systems of Part III.

To date, contributions from this part of the program include:

(a) The analysis of variation in individual cell performance, which has lead to an explanation of the variation. As a result, parameters of critical cell components are being defined so that component specifications may be upgraded to reduce the expected variation in performance of individual cells.

(b) Thermal analysis computer programs have been evolved and have proven to be useful engineering tools for optimizing fuel cell system design.

(c) The studies of advanced control techniques are exploring the possibility of using adaptive control methods on future systems.

Other areas of investigation include: recovery and storage of potable water, and water transport studies.

Part II Fuel Cell Breadboard Systems

The major effort of this part of the program was completed when the 29 volt, 1.8 KW fuel cell system was successfully performance tested for 500 hours. This test verified the following major design approaches to be employed in the Part III 2 KW systems:

(a) The silver cathode demonstrated a substantial increase in life over the nickel cathode. A system life of 1000 hours at rated capacity is considered to be achievable.

(b) The thermal control demonstrated that its design is adequate for continuous operation.

(c) The fuel cell reactor design demonstrated its adequacy for prolonged operation.

(d) The electronic electrolyte controller demonstrated that its design is adequate for continuous operation.

No serious technological problems were identified. The results of the performance tests have focused attention upon the following areas of effort:

(a) The need for improved reactant purge design and controls to further stabilize the output voltage.

(b) Improved control methods that will lower the pH of the product water to assure potability.

Part III Fuel Cell System Test Models

A design approach has been evolved for the 2 KW fuel cell systems of Part III. This approach takes maximum advantage of the development work accomplished on the Part II breadboard systems. It is also consistent with NASA's desire for a fuel cell power system that may be applied to a range of mission requirements.

Having established design guidelines, a centerline specification for the Part III power systems has been evolved. This centerline design defines the best known current technology and design configuration. Trade-offs and improvements will be made against the centerline design.

Development plans for the fuel cell subsystems are being prepared. Evaluation of long lead-time components, such as regulators and valves, has been completed.

TABLE I

ALLIS-CHALMERS BREADBOARD NUMBER 1

CONSTRUCTION DETAILS

Number of Cells	-	70 (two in parallel)
Hydrogen Electrodes	-	Nickel (Clevite)
Catalyst	-	30/30 mg/in^2 Platinum and Palladium
Oxygen Electrodes	-	Silver (Allis-Chalmers #15 SINAC)
Support Plaques	-	Nickel (Clevite)
Cell Electrolyte	-	35 % KOH
Water Removal Electrolyte	-	40 % KOH
Electrolyte Holder	-	0.030" Asbestos
Water Removal Membrane	-	0.030" Asbestos
Hydrogen Plate	-	Magnesium (nickel plated)
Oxygen Plate	-	Magnesium (nickel and silver plated)
Water Removal Plate	-	Magnesium (nickel plated)

TABLE II

MSC BREADBOARD LOAD PROFILE FOR ACCEPTANCE TESTING AT ALLIS-CHALMERS

Segment	Time (Hours)	Duration (Hours)	Current (Amps)
1	0.0 - 2.0	2	15.5
2	2.0 - 5.5	2.5	31.5
3	5.5 - 10.5	5	20.6
4	10.5 - 12.7	2.2	19.1
1a	12.7 - 13.9	1.2	16.0
2a	13.9 - 15.9	2	31.5
3a	15.9 - 19.1	3.2	47.5
4a	19.1 - 20.2	1.1	63.5
5a	20.2 - 22.5	2.3	48.0
6a	22.5 - 24.5	2	32.5
7a	24.5 - 25.5	1	16.0
1b	25.5 - 26.1	0.6	20.0
2b	26.1 - 27.8	1.7	40.0
3b	27.8 - 28.2	0.4	64.0
4b	28.2 - 29.6	1.4	40.0
5b	29.6 - 29.8	0.2	14.0

TABLE III

Polarization Data
MSC Breadboard Fuel Cell System
Elapsed Time - 11.2 Hours

Note: Cell 1 refers to Cell Section 1; and all voltages are in millivolts.

Amps	Total Voltage	Cell 1	Cell 2	Cell 3	Cell 4	Cell 5	Cell 6	Cell 7	Cell 8
10	34.1	971	972	974	973	968	972	977	967
20	33.0	931	940	935	941	927	931	940	924
30	31.8	894	910	900	909	888	894	907	881
40	30.9	860	883	870	881	854	861	878	837
50	29.9	822	855	839	853	816	827	849	779
60	28.7	781	827	811	823	769	794	821	682
70	27.7	739	799	784	793	699	760	794	575
80	26.5	684	772	758	758	593	723	768	506

Amps	Cell 9	Cell 10	Cell 11	Cell 12	Cell 13	Cell 14	Cell 15	Cell 16	Cell 17
10	969	974	981	975	971	972	977	978	972
20	931	943	949	940	929	940	934	947	940
30	897	914	920	908	888	911	893	918	909
40	866	887	894	880	850	885	853	892	881
50	836	859	867	849	810	857	806	865	853
60	808	833	842	822	769	831	752	839	826
70	782	808	818	796	721	807	681	813	800
80	755	781	794	769	660	782	581	788	772

Amps	Cell 18	Cell 19	Cell 20	Cell 21	Cell 22	Cell 23	Cell 24	Cell 25	Cell 26
10	973	972	977	973	975	971	974	978	968
20	943	940	946	940	943	938	941	946	933
30	914	911	918	910	912	908	909	916	901
40	888	885	892	883	885	880	878	891	872
50	861	858	867	856	859	852	854	864	842
60	835	831	842	830	831	825	826	837	814
70	809	809	819	804	806	799	800	815	785
80	781	783	795	779	780	772	773	790	752

Amps	Cell 27	Cell 28	Cell 29	Cell 30	Cell 31	Cell 32	Cell 33	Cell 34	Cell 35
10	976	967	975	969	973	975	974	979	979
20	945	933	945	937	941	943	940	949	949
30	916	901	915	906	911	914	909	923	922
40	891	873	889	879	886	888	883	898	897
50	866	844	863	851	859	863	856	874	872
60	841	819	839	824	835	840	830	851	849
70	818	792	816	796	812	817	806	830	826
80	793	765	792	765	788	796	783	809	804

TABLE IV

Polarization Data
MSC Breadboard Fuel Cell System
Elapsed Time - 100.5 Hours

Note: Cell 1 refers to Cell Section 1; and all voltages are in millivolts.

Amps	Total Voltage	Cell 1	Cell 2	Cell 3	Cell 4	Cell 5	Cell 6	Cell 7	Cell 8
10	34.2	977	974	973	974	968	973	978	961
20	33.0	938	939	932	939	923	930	939	914
30	30.2	903	907	895	903	880	889	903	866
40	30.7	873	878	864	874	839	856	876	818
50	29.6	845	850	834	844	782	820	849	739
60	28.5	817	823	804	811	682	784	823	618
70	27.4	789	795	774	774	580	746	795	539
80	26.2	753	760	739	724	522	701	766	486

Amps	Cell 9	Cell 10	Cell 11	Cell 12	Cell 13	Cell 14	Cell 15	Cell 16	Cell 17
10	969	978	983	976	976	972	981	981	974
20	928	943	949	940	932	935	944	950	938
30	890	911	917	904	887	901	910	920	904
40	860	883	890	874	848	872	880	895	875
50	831	857	865	847	808	845	851	872	847
60	803	830	841	818	764	817	818	849	820
70	775	802	816	791	710	788	782	826	790
80	744	772	788	759	638	755	737	801	758

Amps	Cell 18	Cell 19	Cell 20	Cell 21	Cell 22	Cell 23	Cell 24	Cell 25	Cell 26
10	976	973	979	974	978	973	975	981	970
20	941	937	946	938	942	937	939	946	931
30	908	903	917	903	909	902	904	914	894
40	881	877	891	874	881	873	875	889	864
50	853	850	867	847	854	845	847	863	834
60	825	825	843	819	828	817	820	839	803
70	795	800	820	790	800	788	789	816	770
80	758	771	795	758	768	754	754	790	723

Amps	Cell 27	Cell 28	Cell 29	Cell 30	Cell 31	Cell 32	Cell 33	Cell 34	Cell 35
10	978	968	976	970	974	976	974	981	982
20	944	929	942	934	939	942	938	949	950
30	912	895	910	897	907	910	904	919	920
40	887	865	883	869	880	884	876	895	895
50	863	836	858	839	855	859	850	872	872
60	839	808	833	807	829	836	824	849	849
70	817	778	810	771	804	812	800	828	827
80	791	742	783	722	776	789	773	806	803

TABLE V

Polarization Data
MSC Breadboard Fuel Cell System
Elapsed Time - 200.5 Hours

Note: Cell 1 refers to Cell Section 1; and all voltages are in millivolts.

Amps	Total Voltage	Cell 1	Cell 2	Cell 3	Cell 4	Cell 5	Cell 6	Cell 7	Cell 8
10	33.6	970	960	962	970	965	964	972	968
20	32.3	931	925	919	933	921	917	933	919
30	31.1	897	890	875	896	878	875	898	875
40	30.0	865	854	833	862	840	836	867	831
50	28.8	835	824	786	825	794	792	836	775
60	27.6	806	784	729	776	714	742	805	673
70	26.1	777	731	647	704	600	685	773	576
80	24.6	746	665	561	624	532	627	736	513

Amps	Cell 9	Cell 10	Cell 11	Cell 12	Cell 13	Cell 14	Cell 15	Cell 16	Cell 17
10	962	970	977	970	944	965	969	976	968
20	921	936	941	931	887	928	928	944	931
30	884	904	911	897	932	894	890	915	899
40	851	874	883	865	775	863	854	888	869
50	817	844	855	833	706	832	814	862	838
60	784	812	838	802	628	798	770	836	807
70	749	780	800	768	560	764	718	812	776
80	703	741	771	730	499	720	648	786	739

Amps	Cell 18	Cell 19	Cell 20	Cell 21	Cell 22	Cell 23	Cell 24	Cell 25	Cell 26
10	968	967	974	965	971	964	967	974	963
20	932	931	942	930	936	928	931	940	924
30	900	898	912	897	904	893	896	908	889
40	870	869	885	864	874	862	865	880	855
50	839	840	859	836	843	832	834	852	821
60	804	811	833	804	813	800	801	828	784
70	765	784	809	772	782	765	765	800	739
80	707	753	782	736	745	723	721	774	673

Amps	Cell 27	Cell 28	Cell 29	Cell 30	Cell 31	Cell 32	Cell 33	Cell 34	Cell 35
10	971	963	971	963	969	971	967	976	977
20	938	926	936	926	933	937	930	942	944
30	907	891	904	892	901	906	896	914	913
40	879	860	875	860	872	877	867	888	886
50	852	829	848	827	843	851	838	862	859
60	826	797	820	790	814	826	809	838	833
70	799	764	794	747	786	801	780	815	807
80	773	725	766	689	755	777	750	792	784

TABLE VI

Operating Points for 2 KW - 2 Canister Power Systems

Present Capability Assuming Worst Degradation Rate
(34 Section Design)

	Gross Power at System Voltages of		
Module Age	27 Volts	31 Volts	21 Volts (Overload)
0 hours	3450 W	1050 W	5650 W
720 hours	2140 W	650 W	3550 W

Present Capability Assuming Degradation Rate is Proportional To Load
(32 Section Design)

	Gross Power at System Voltages of		
Module Age	27 Volts	31 Volts	21 Volts (Overload)
0 hours	2920 W	343 W	5320 W
720 hours	2240 W	213 W	4080 W

TABLE VII

Fuel Cell Power System Requirements

Nominal Power Rating	-	2000 Watts
Overload	-	3300 Watts for 30 Seconds
Voltage Regulation	-	29 ± 2 Volts - Load Range 800 to 2000 Watts
Minimum Voltage and Overload	-	21 Volts
Reactant Inlet Pressure	-	100 - 400 psia
Reactant Inlet Temperature	-	-18° C to +66° C
Reactant Purity (Expected)	-	99.9%
Thermal Efficiency	-	55 - 65%
Endurance	-	720 Hours Under Load
Coolant	-	60% Methyl Alcohol, 40% Water - By Weight
Coolant Supply	-	250 Pounds Per Hour at 15 ± 3° C
Coolant Pressure Drop	-	5.0 psi
Start-up and Shut-down	-	1.0 Hour from -18° C
Environment (Design Criteria Only)	-	Motion and Thermal Vacuum Requirements

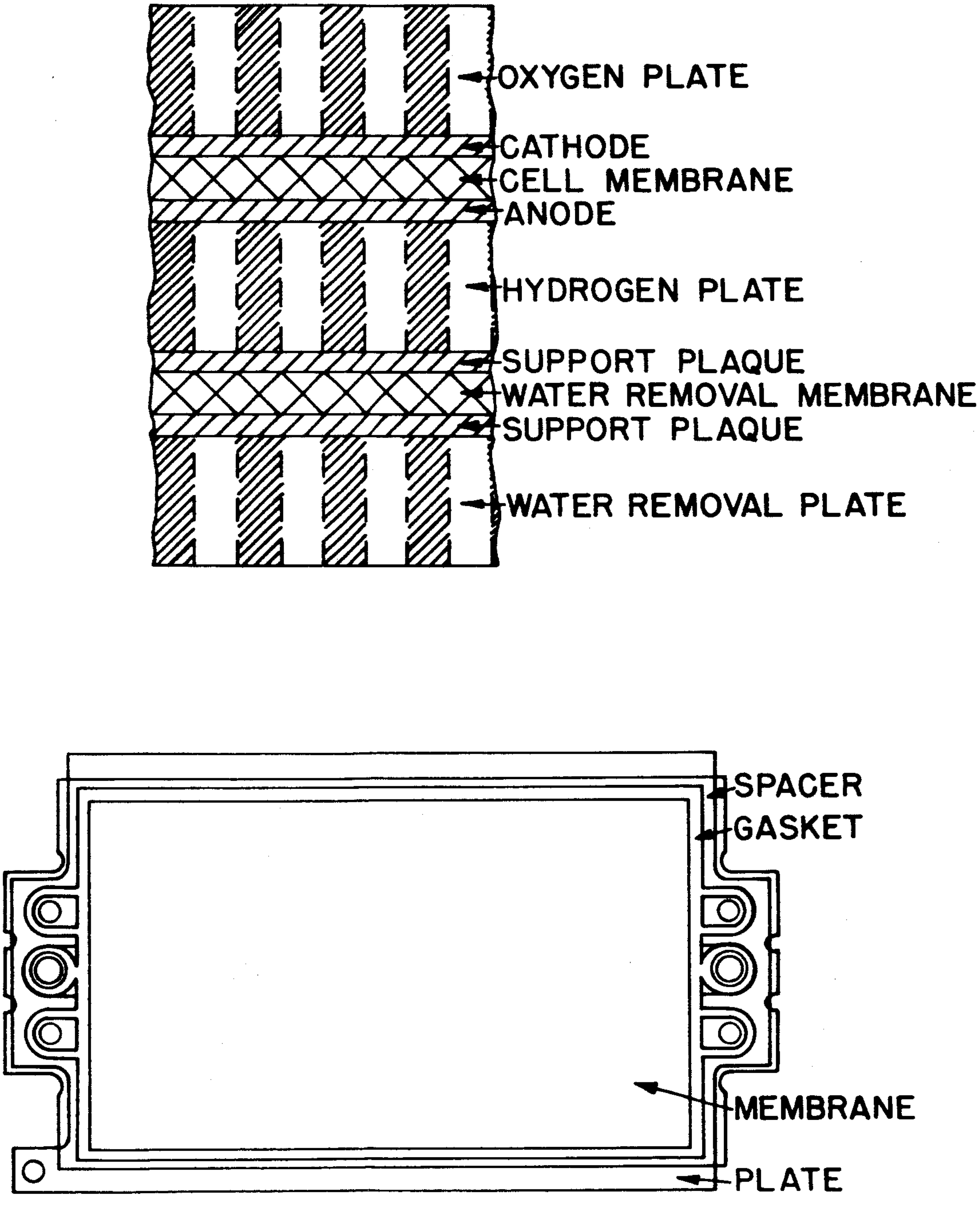

TYPICAL CELL CONSTRUCTION

FIGURE 1

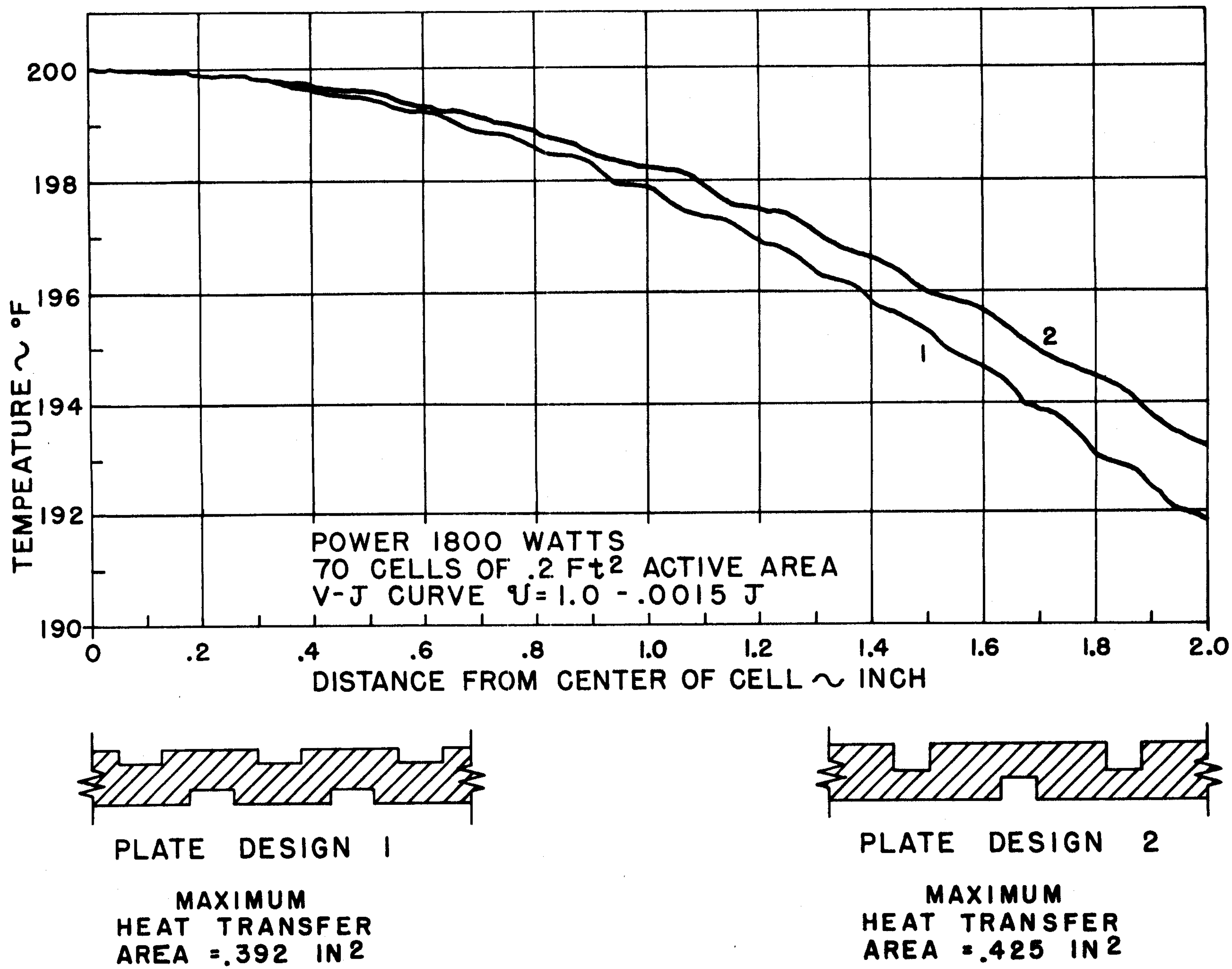

COMPUTED CELL TEMPERATURE PROFILE

FIGURE 2

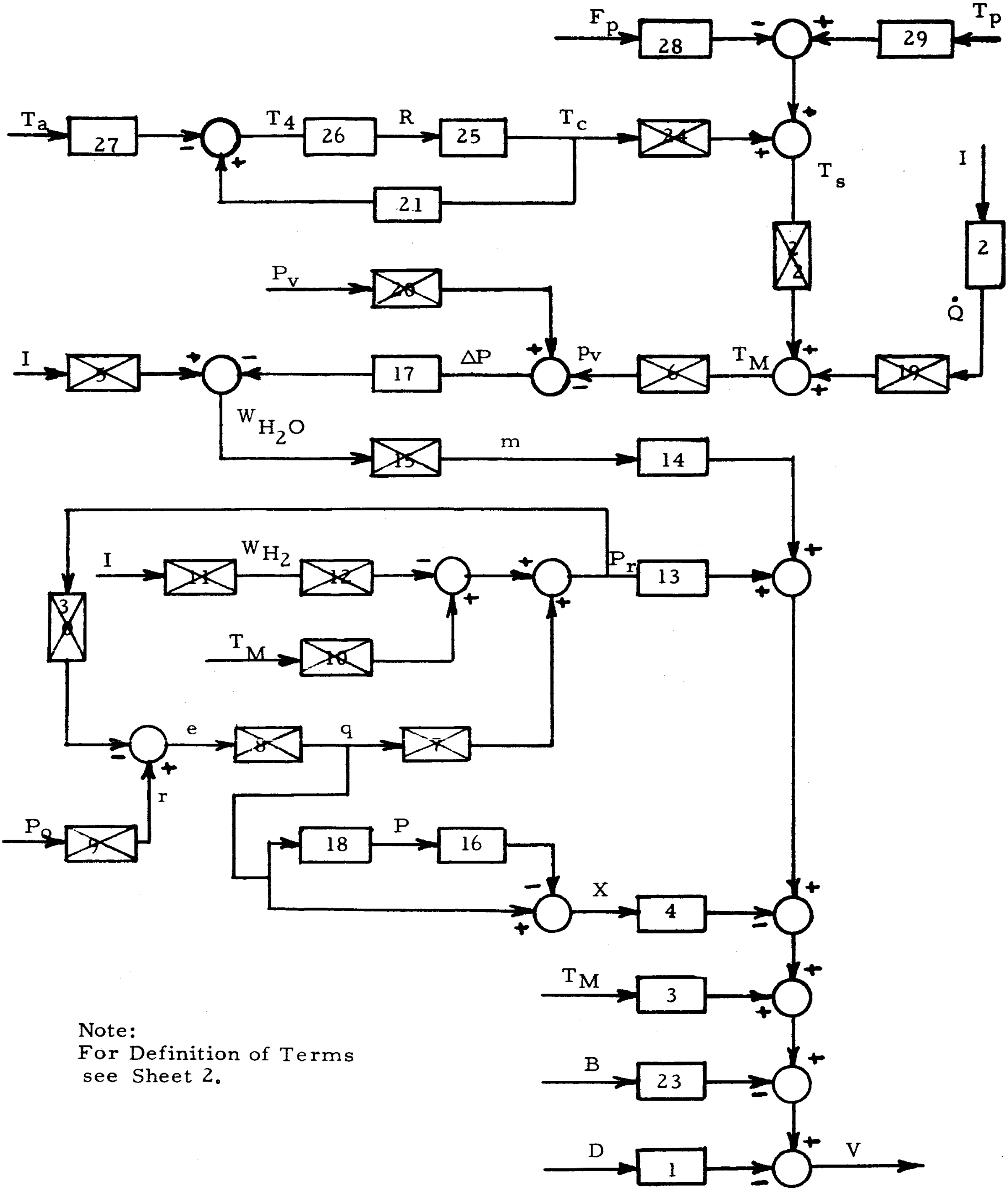

Note:
For Definition of Terms
see Sheet 2.

Process Characteristics
Figure 3 (Sheet 1 of 2)

Process Characteristics		Units
B	Blocking of individual cells	dimensionless
D	Plate deterioration	10^{-3} volts hr^{-1}
e	Actuating pressure signal	lbs in^{-2} absolute
F_P	Flow rate of primary coolant	lbs hr^{-1}
I	Output Current	Amperes
m	Moisture content of cell	in^3
P	Purge	dimensionless
P_o	Set point pressure (operating pressure)	lbs in^{-2} absolute
P_r	Reactant pressure	lbs in^{-2} absolute
P_v	Required vapor pressure of H_2O at temperature T_M	lbs in^{-2} absolute
p_v	Actual vapor pressure of H_2O at temperature T_M	lbs in^{-2} absolute
ΔP	Working vapor pressure for H_2O removal	lbs in^{-2} absolute
$\dot{Q}$	Rate of heat production in module	BTU hr^{-1}
q	Reactant flow rate (in)	moles/hr
R	Radiation	BTU hr^{-1}
r	Reference input pressure	lbs in^{-2} absolute
T_a	Ambient temperature	° F
T_c	Temperature of canister	° F
T_M	Temperature of fuel cell module	° F
T_p	Inlet temperature of primary coolant	° F
T_S	Temperature of secondary coolant	° F
T_4	$(T_c^4 - T_a^4)$	R^4
V	Output voltage	Volts
W_{H_2}	Reactant flow rate (out)	moles hr^{-1}
W_{H_2O}	Rate of production of water	lbs hr^{-1}
X	Inert buildup	dimensionless

Process Characteristics - Definition of Terms
Figure 3 (Sheet 2 of 2)

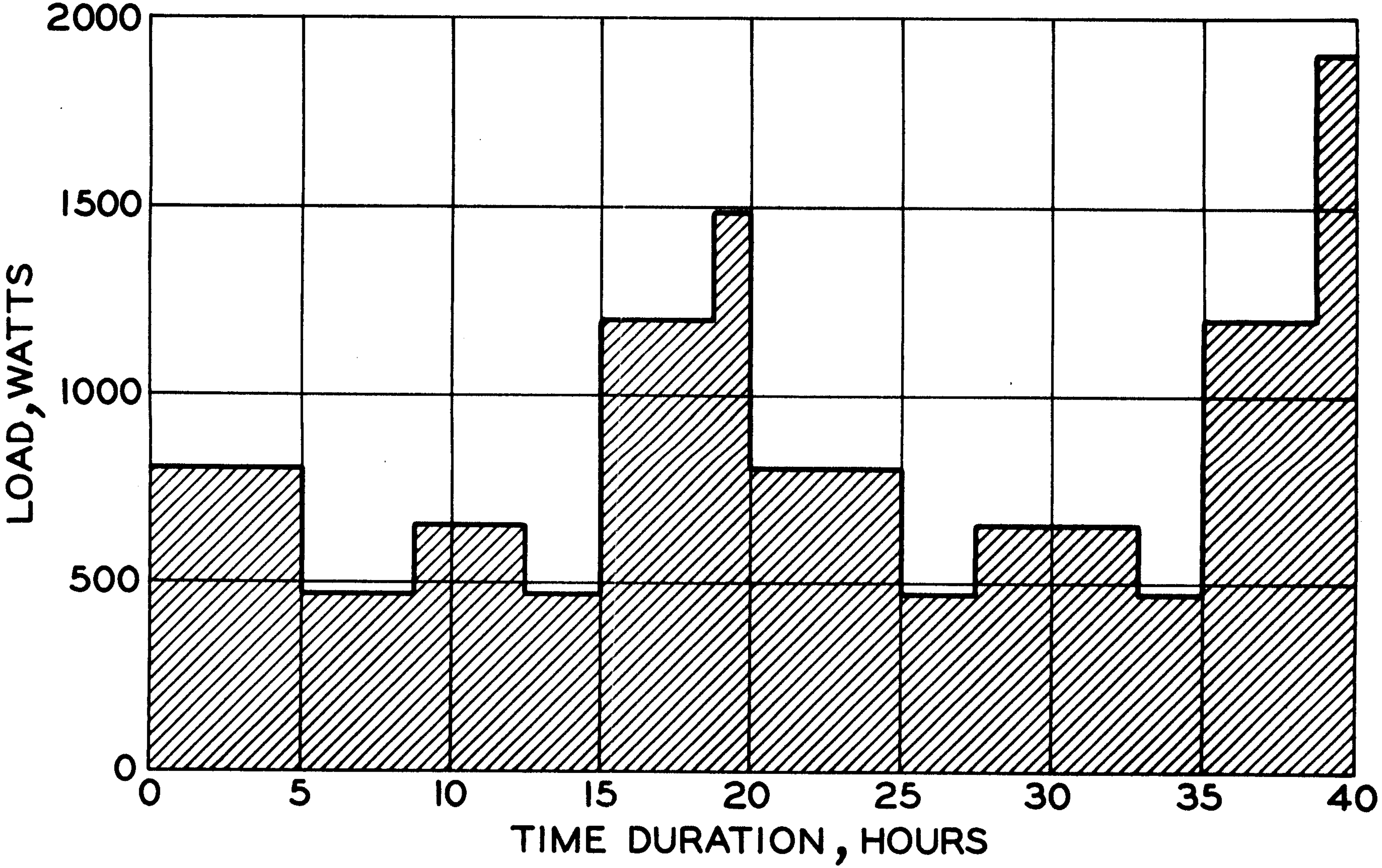

LOAD PROFILE FOR A-C BREADBOARD No. 1
PERFORMANCE TEST

FIGURE 4

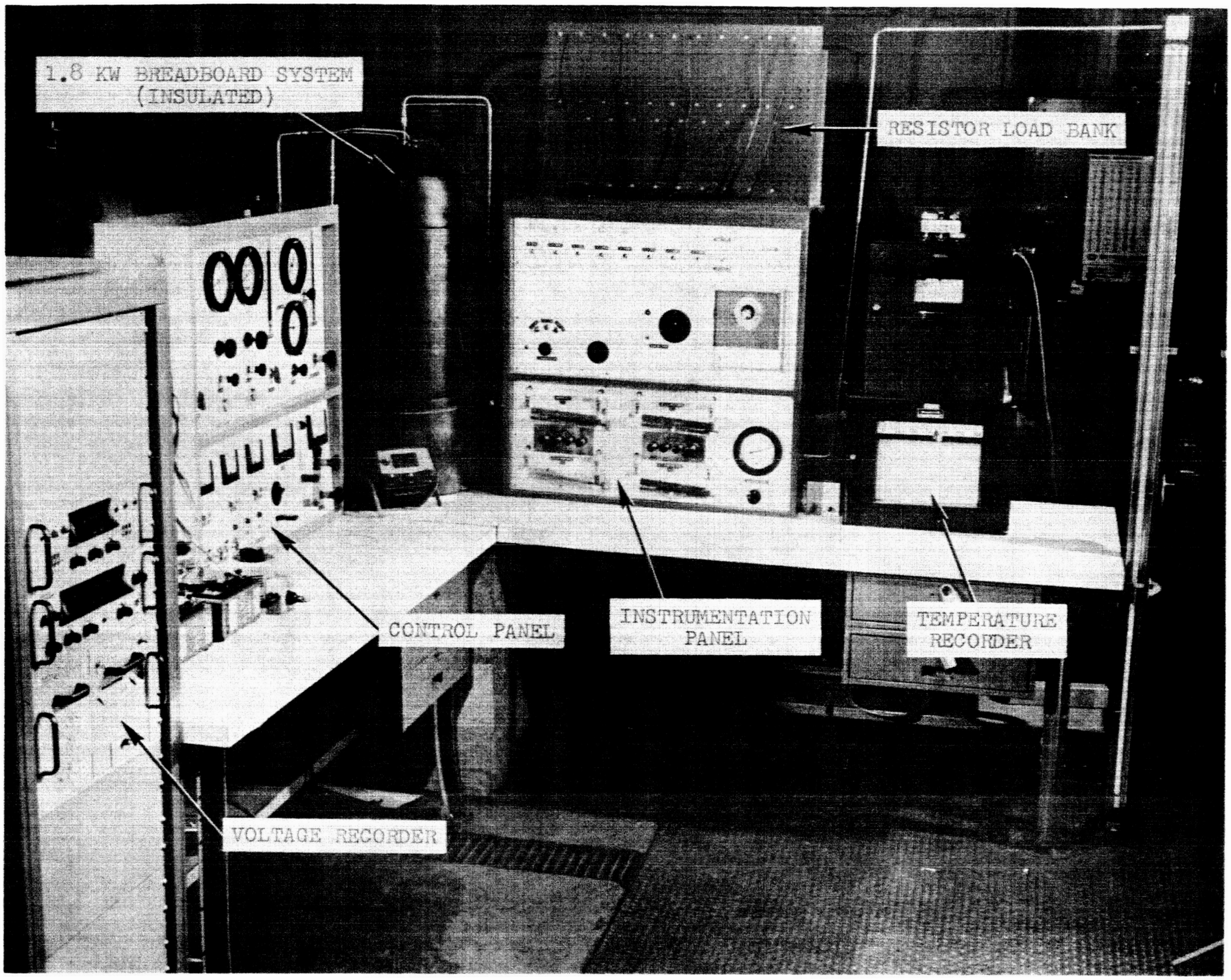

1.8 KW Breadboard System
Test Setup
Figure 5

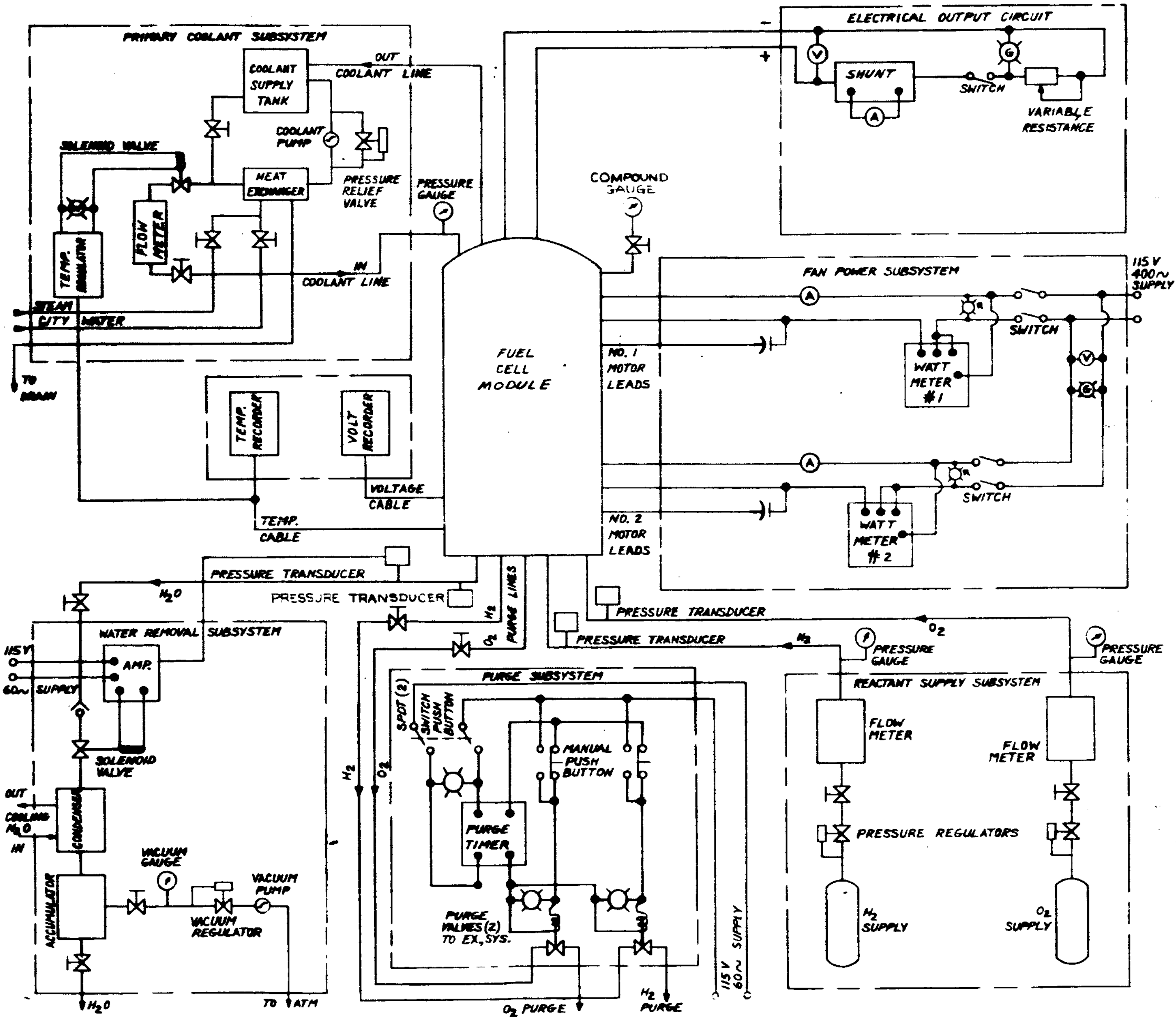

Schematic Diagram of Test Setup
A-C BB No. 1 Performance Test
Figure 6

PERFORMANCE CHARACTERISTICS
ALLIS CHALMERS BREADBOARD #1 FUEL CELL SYSTEM
70 CELLS (2 CELLS IN PARALLEL)
Ni - Ag ELECTRODES

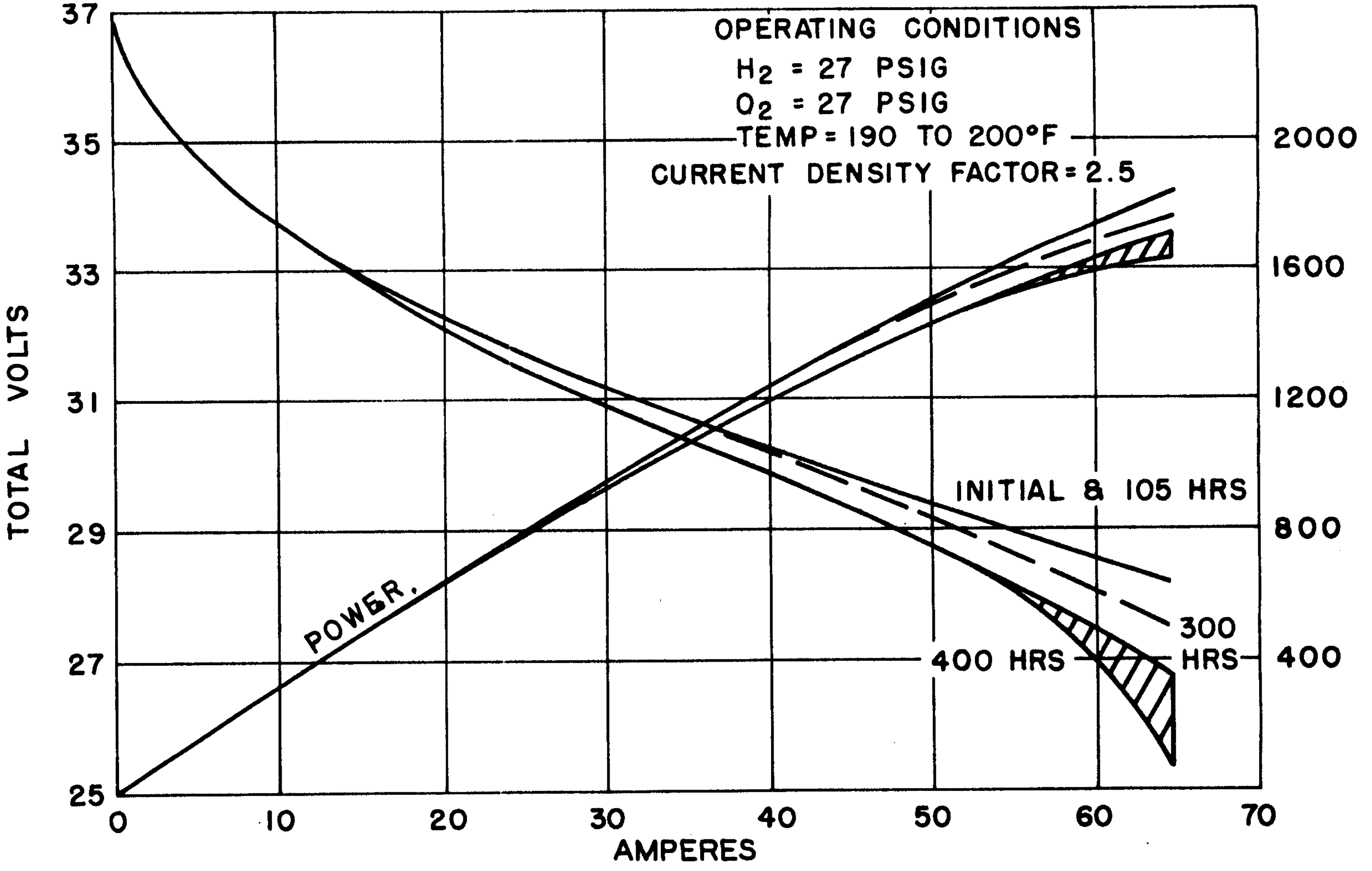

FIGURE 7

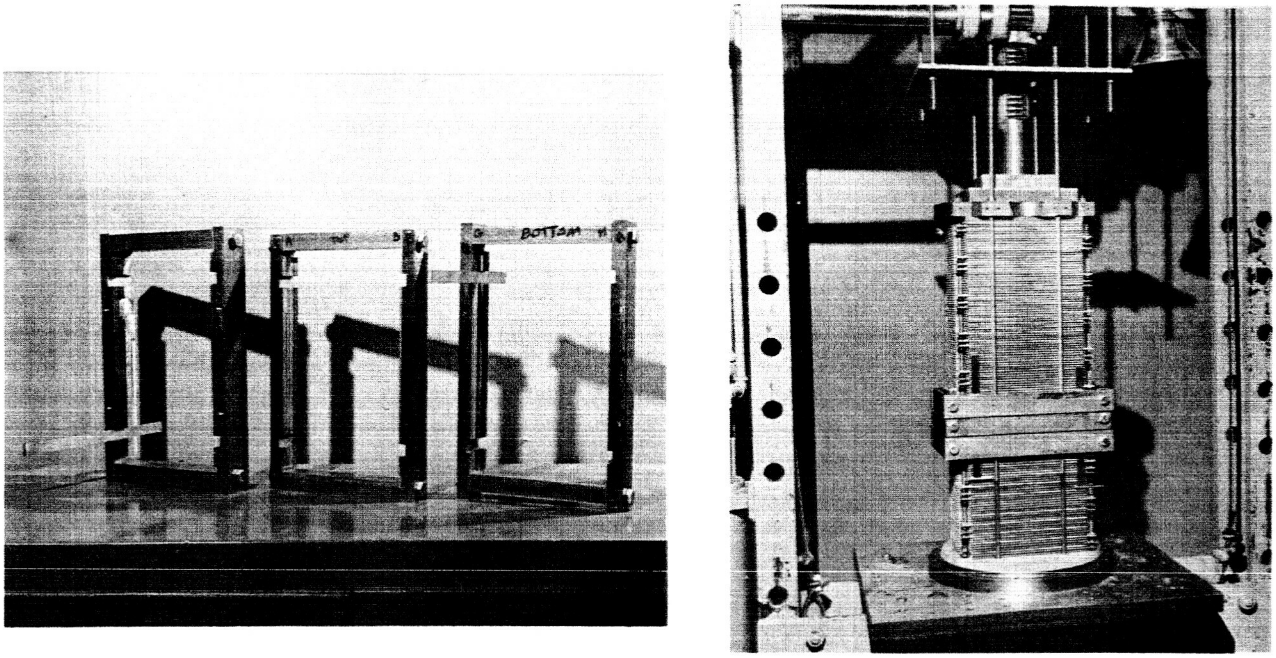

A - Fixtures for Stack Separation

B - Fixtures Installed on Fuel Cell Module

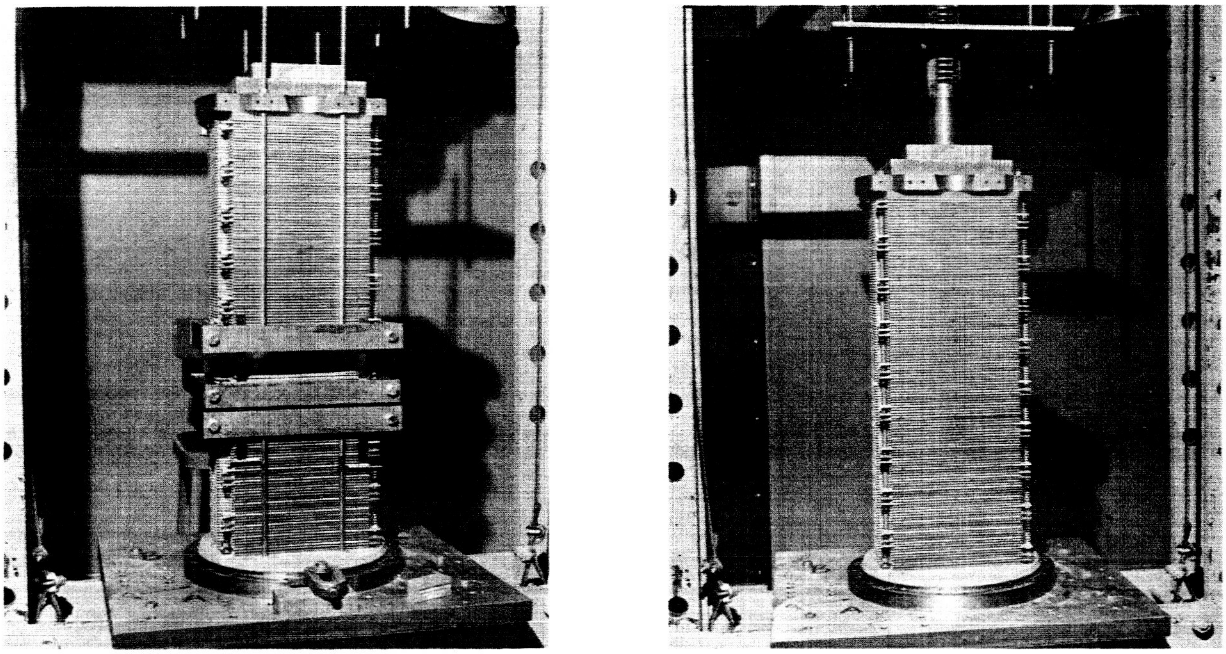

C - Module Stack Separated

D - Module Reassembled

Method of Stack Separation and Cell Removal

Figure 8

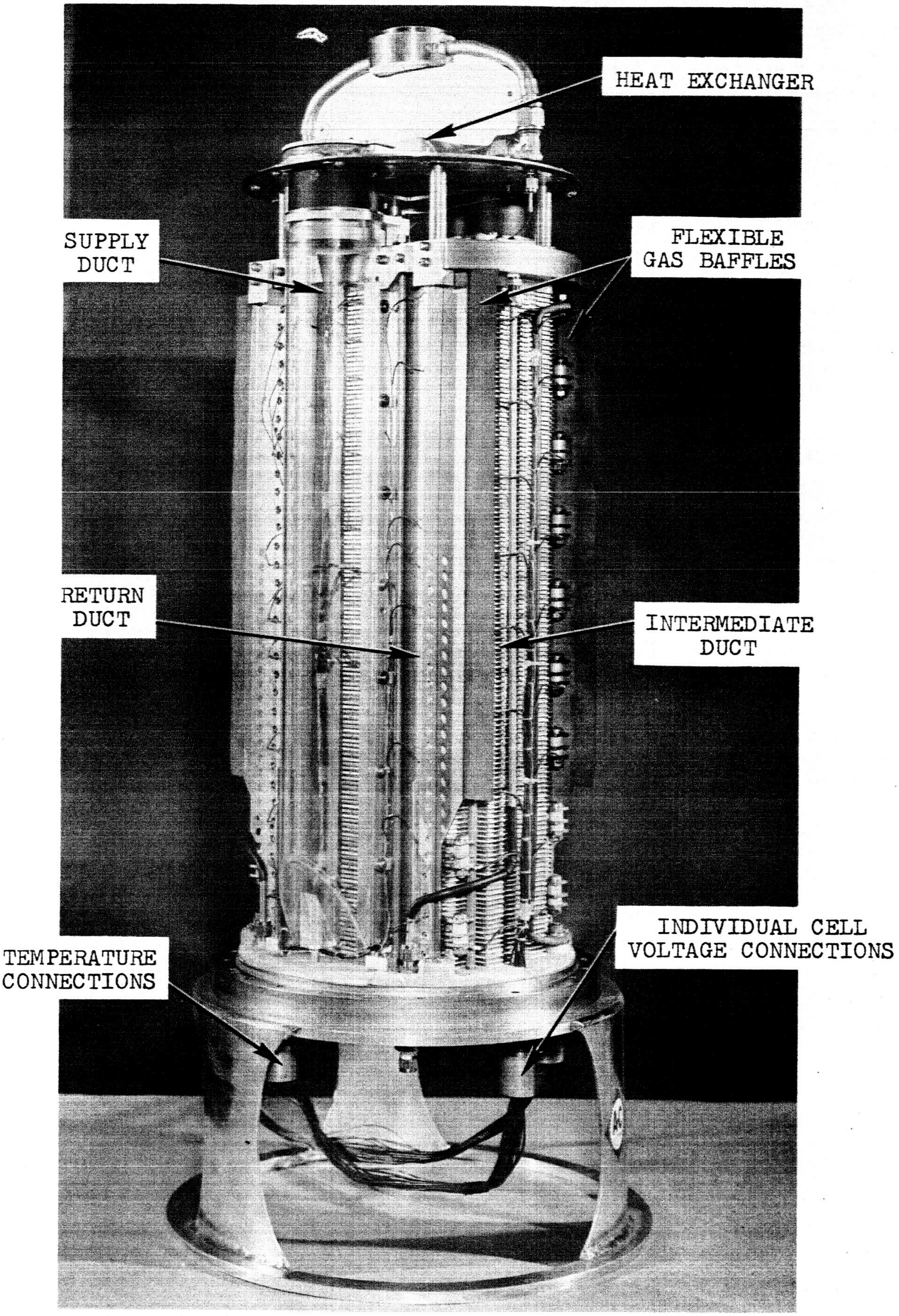

1.8 KW Fuel Cell Breadboard System
With Canister Removed
Figure 9

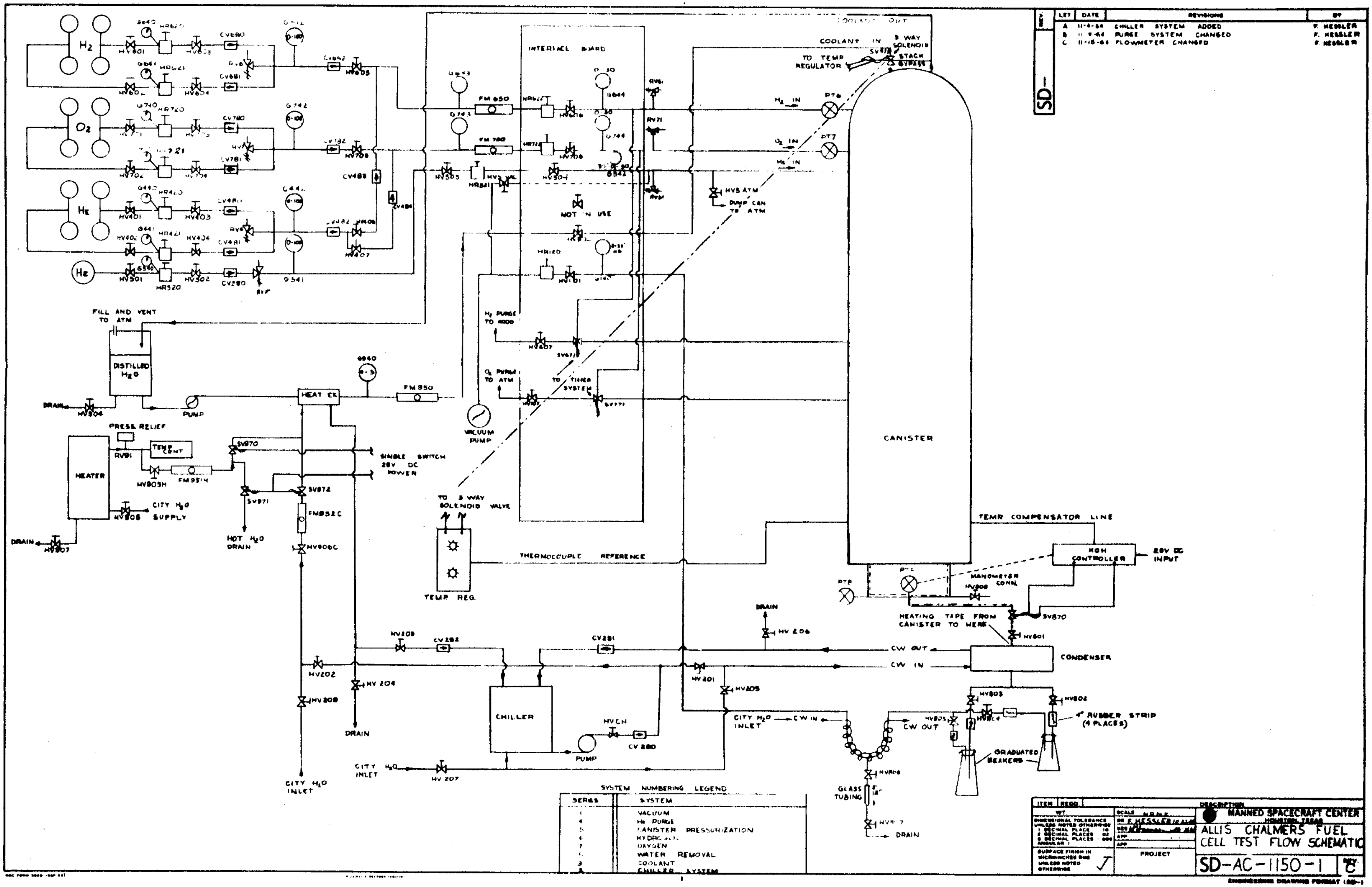

Schematic Diagram of Test Setup
Performance Test at MSC

Figure 10

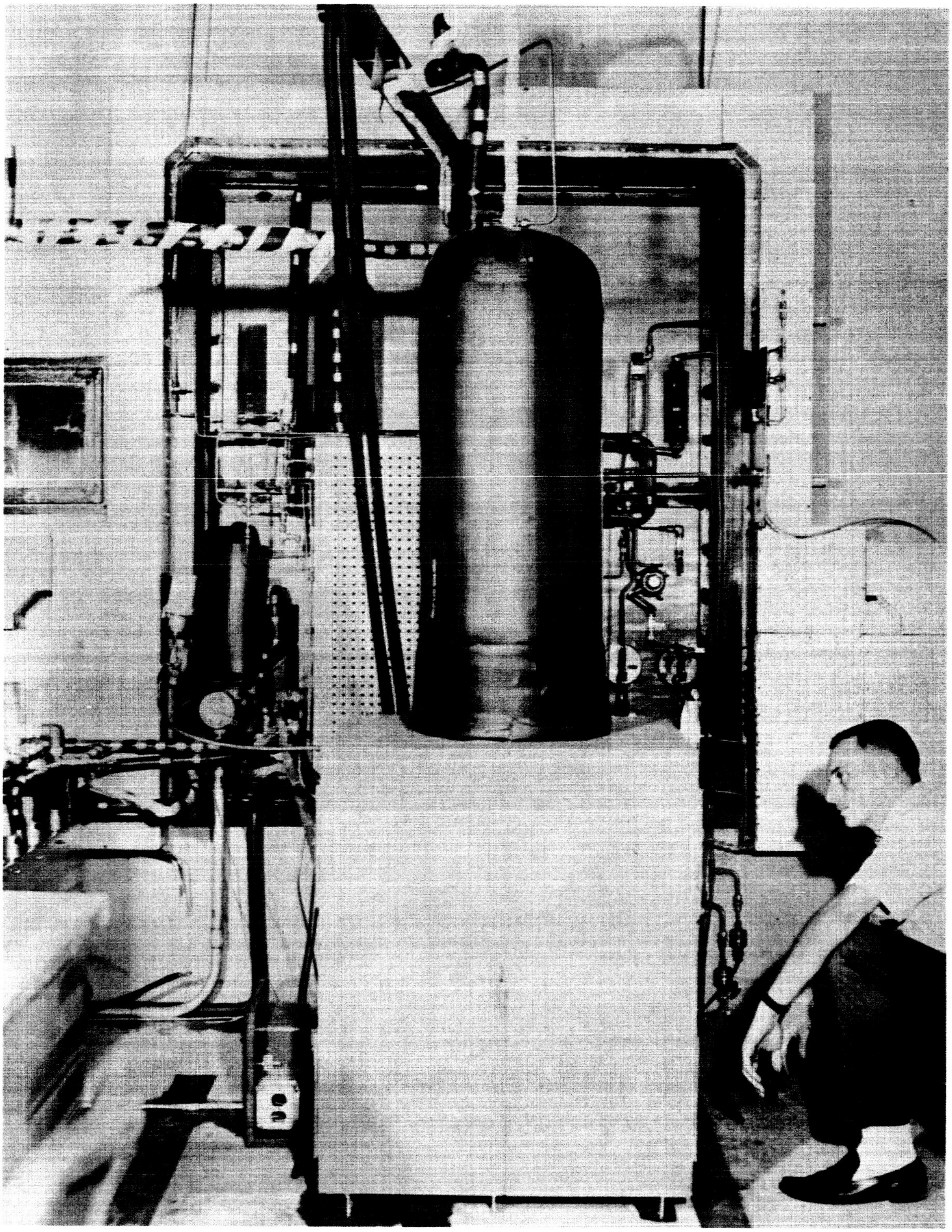

Module and Subsystem Arrangement
Figure 11

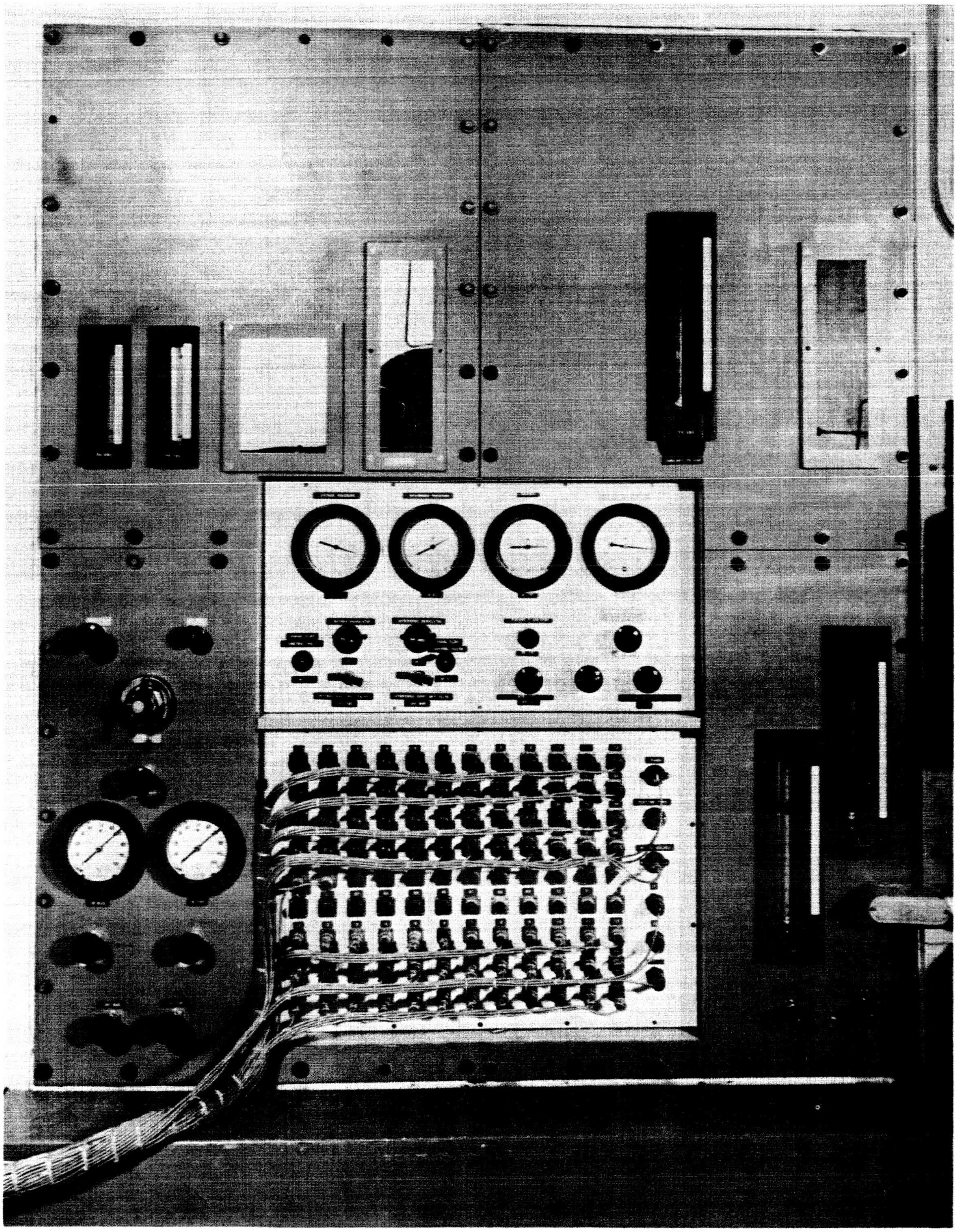

Control Panel and Interface Board
Figure 12

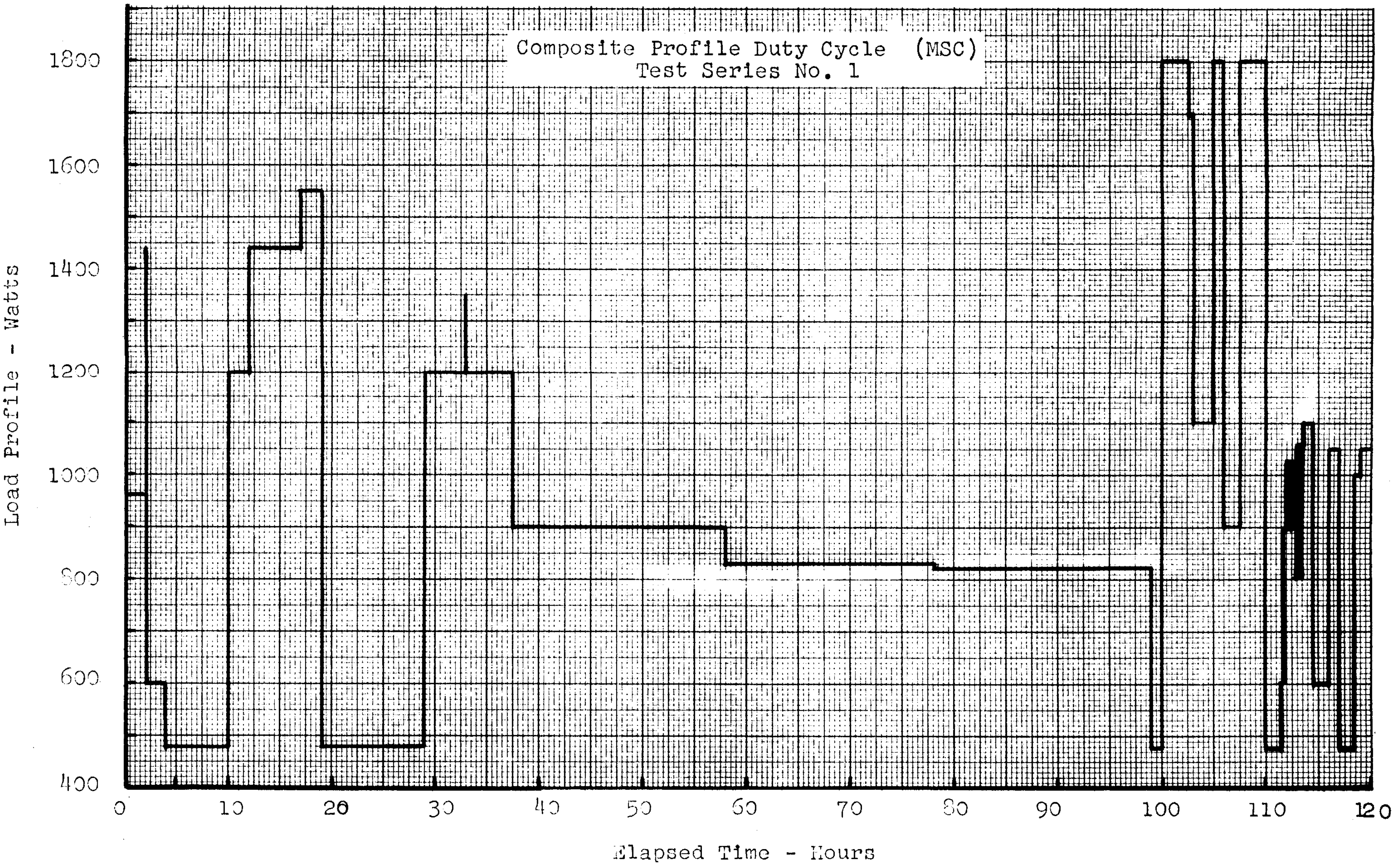
Composite Profile Duty Cycle (MSC)
Test Series No. 1
Load Profile - Watts
1800
1600
1400
1200
1000
800
600
400
0
10
20
30
40
50
60
70
80
90
100
110
120
Elapsed Time - Hours

Figure 13

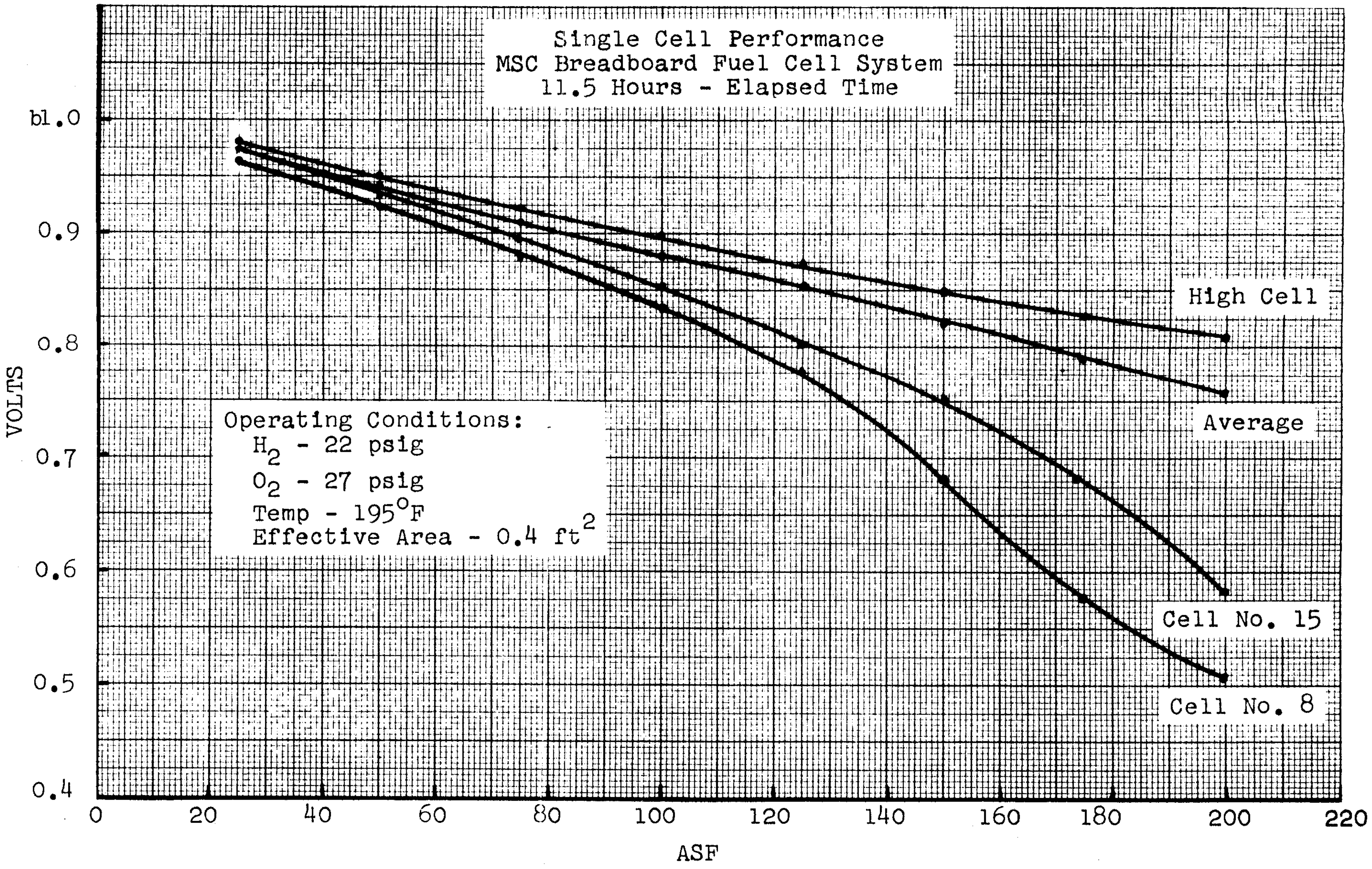

Single Cell Performance
MSC Breadboard Fuel Cell System
11.5 Hours - Elapsed Time

Operating Conditions:
H_2 - 22 psig
O_2 - 27 psig
Temp - 195°F
Effective Area - 0.4 ft^2

Figure 14

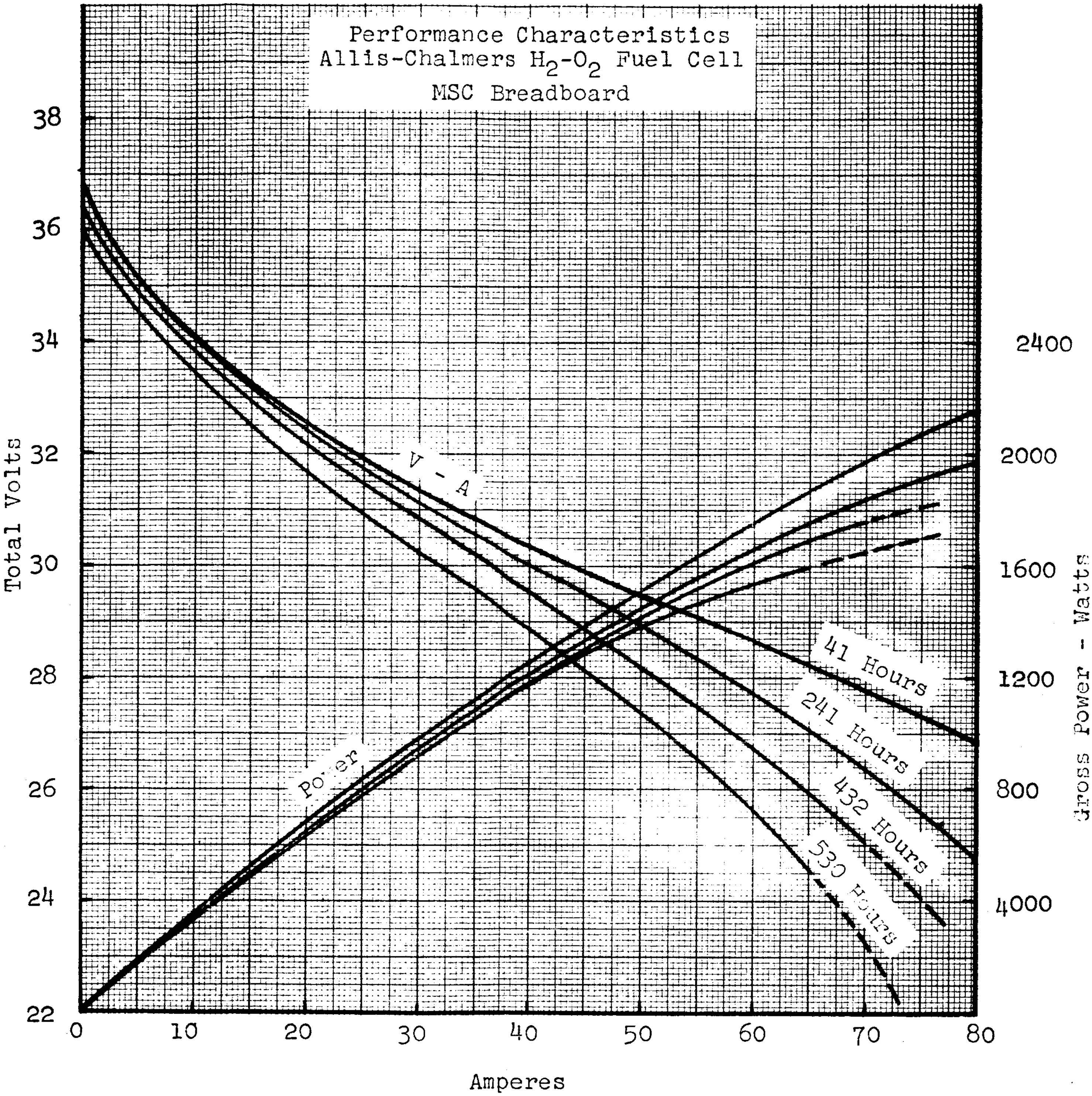
Performance Characteristics
Allis-Chalmers H_2-O_2 Fuel Cell
MSC Breadboard
Total Volts
38
36
34
32
30
28
26
24
22
0
10
20
30
40
50
60
70
80
Amperes
Gross Power - Watts
2400
2000
1600
1200
800
4000
V - A
Power
41 Hours
241 Hours
432 Hours
530 Hours

Figure 15

	100 HOURS	300 HOURS	1000 HOURS
SMALL MODULE 773 MV 227 ASF	CELLS 80 FUEL 191 271	CELLS 80 FUEL 575 655	CELLS 80 FUEL 1916 1996
MEDIUM MODULE 851 MV 149 ASF	CELLS 110 FUEL 175 285	CELLS 110 FUEL 522 632	CELLS 110 FUEL 1747 1857
LARGE MODULE 907 MV 93 ASF	CELLS 166 FUEL 163 329	CELLS 166 FUEL 490 656	CELLS 166 FUEL 1634 1800

V-J CURVE:	.8V @ 200 ASF
CELL WEIGHT:	7 LB./FT.^{2} CELL
POWER:	2 KW

NO PURGE
NO PARASITIC POWER

NOTE:-
ALL WEIGHTS IN TABLE ARE IN POUNDS

SYSTEM WEIGHT VS. MISSION TIME

FIGURE 16

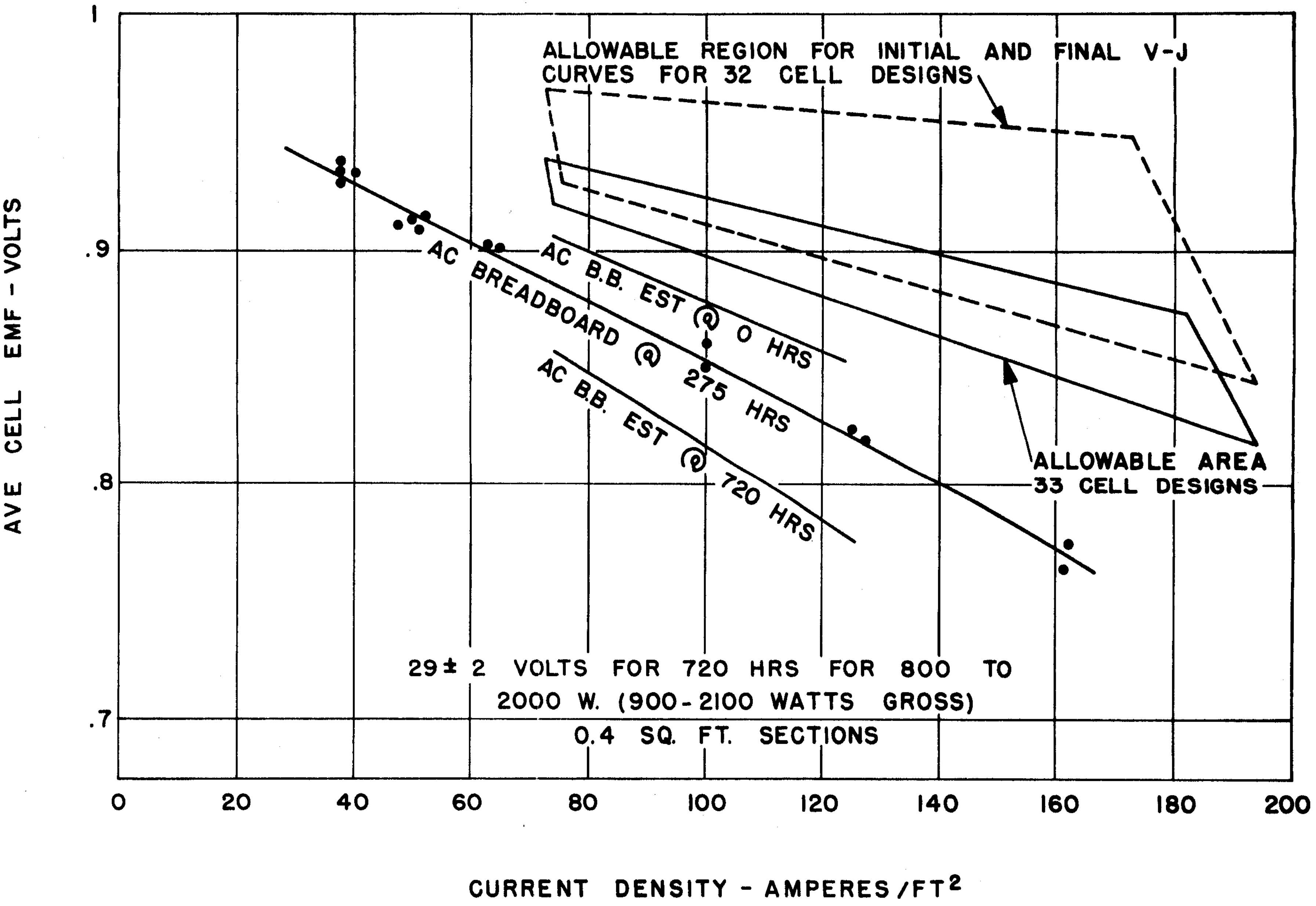

RESTRICTIONS ON V-J CURVES

FIGURE 17

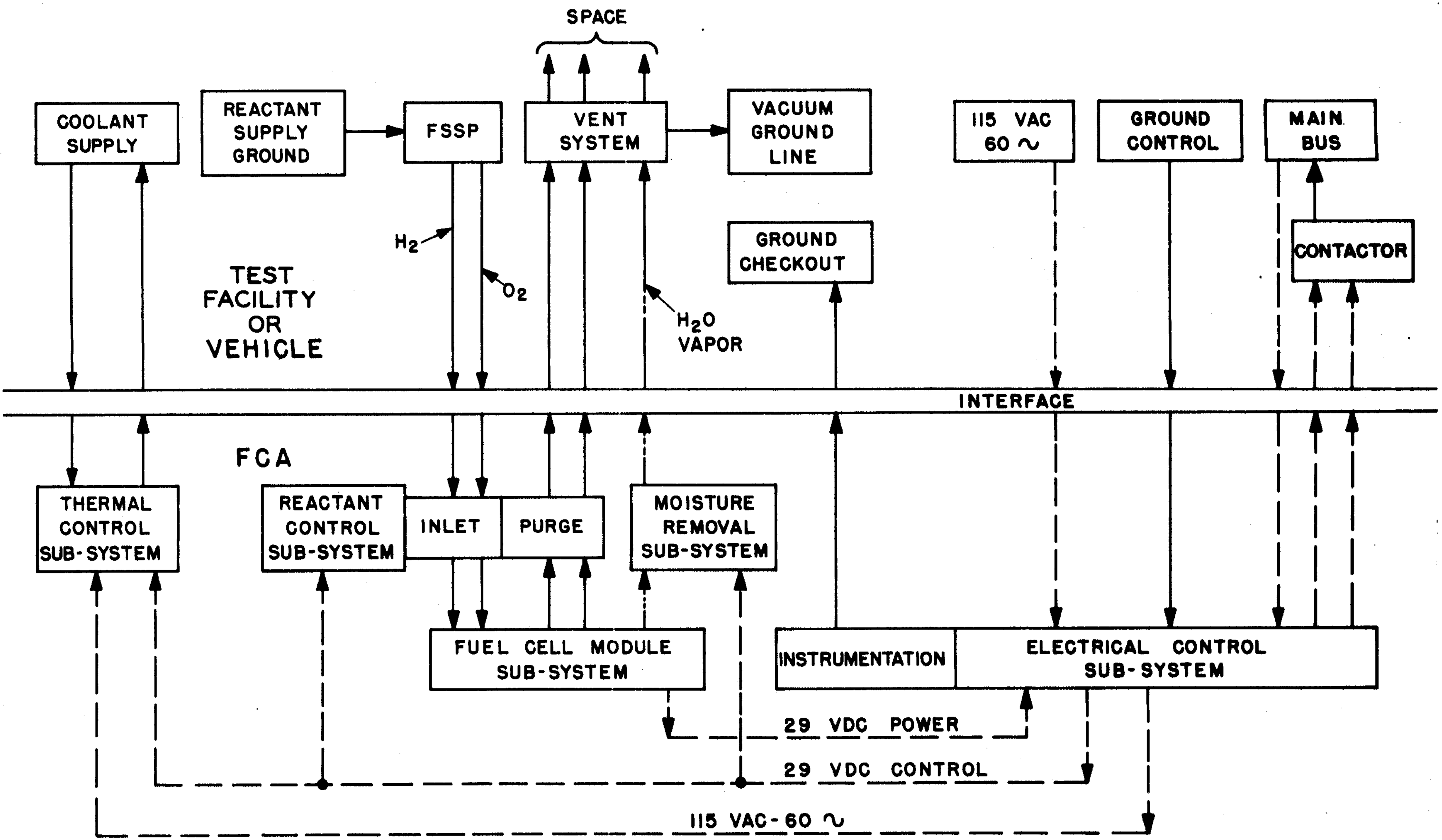

FCA INTERFACE BLOCK DIAGRAM FOR OPEN LOOP

FIGURE 18

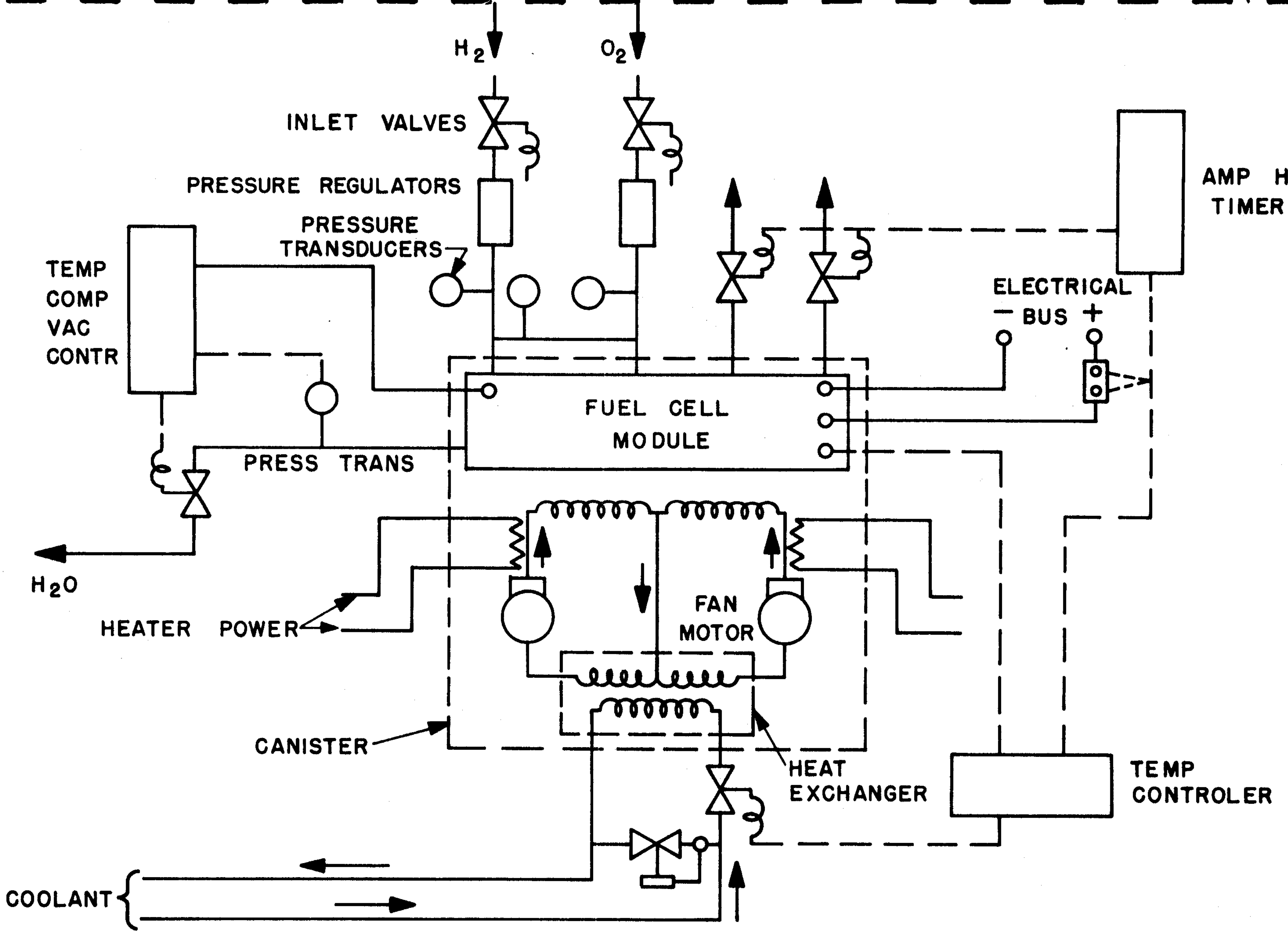

FCA SCHEMATIC

FIGURE 19

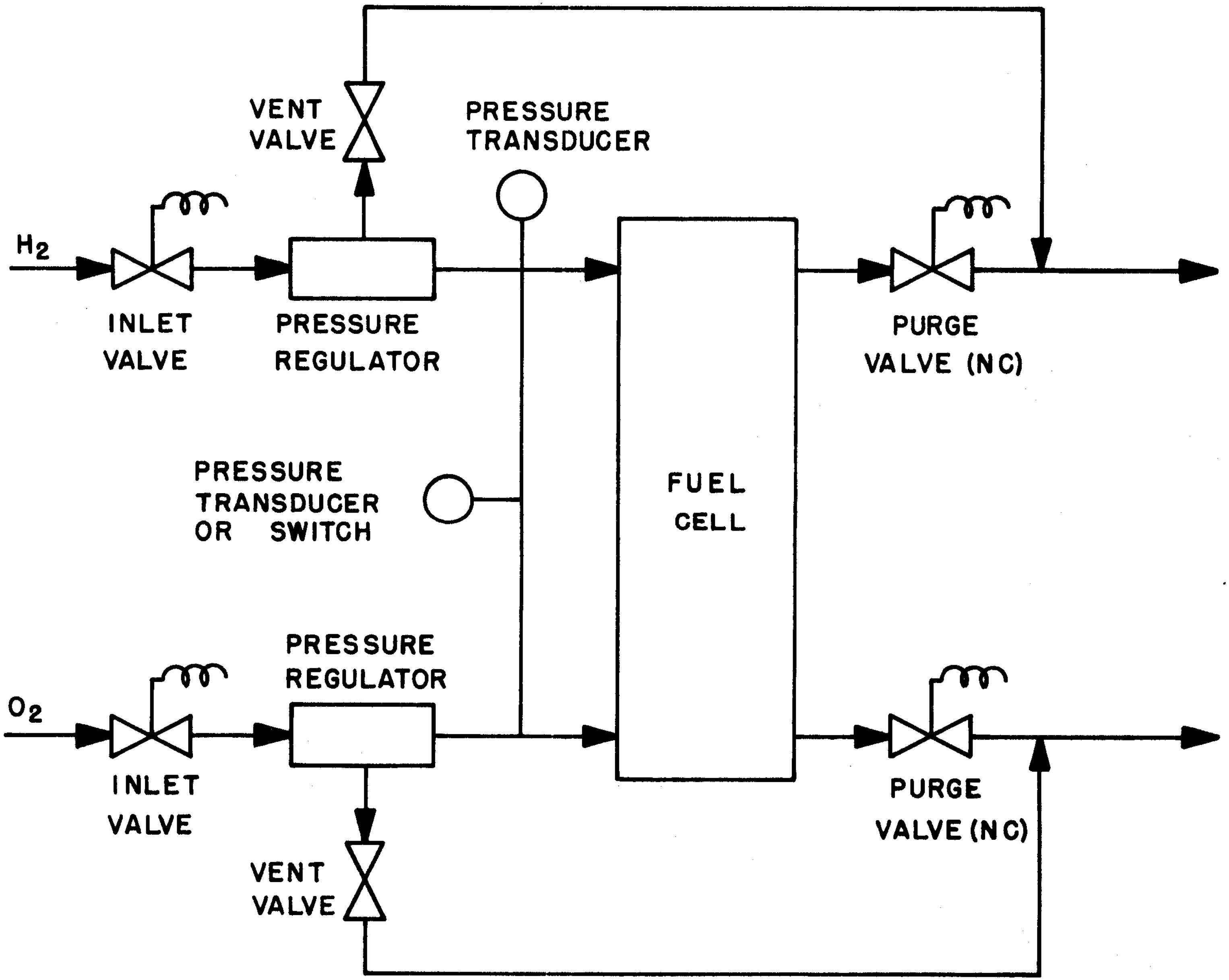

RCCS SCHEMATIC

FIGURE 20

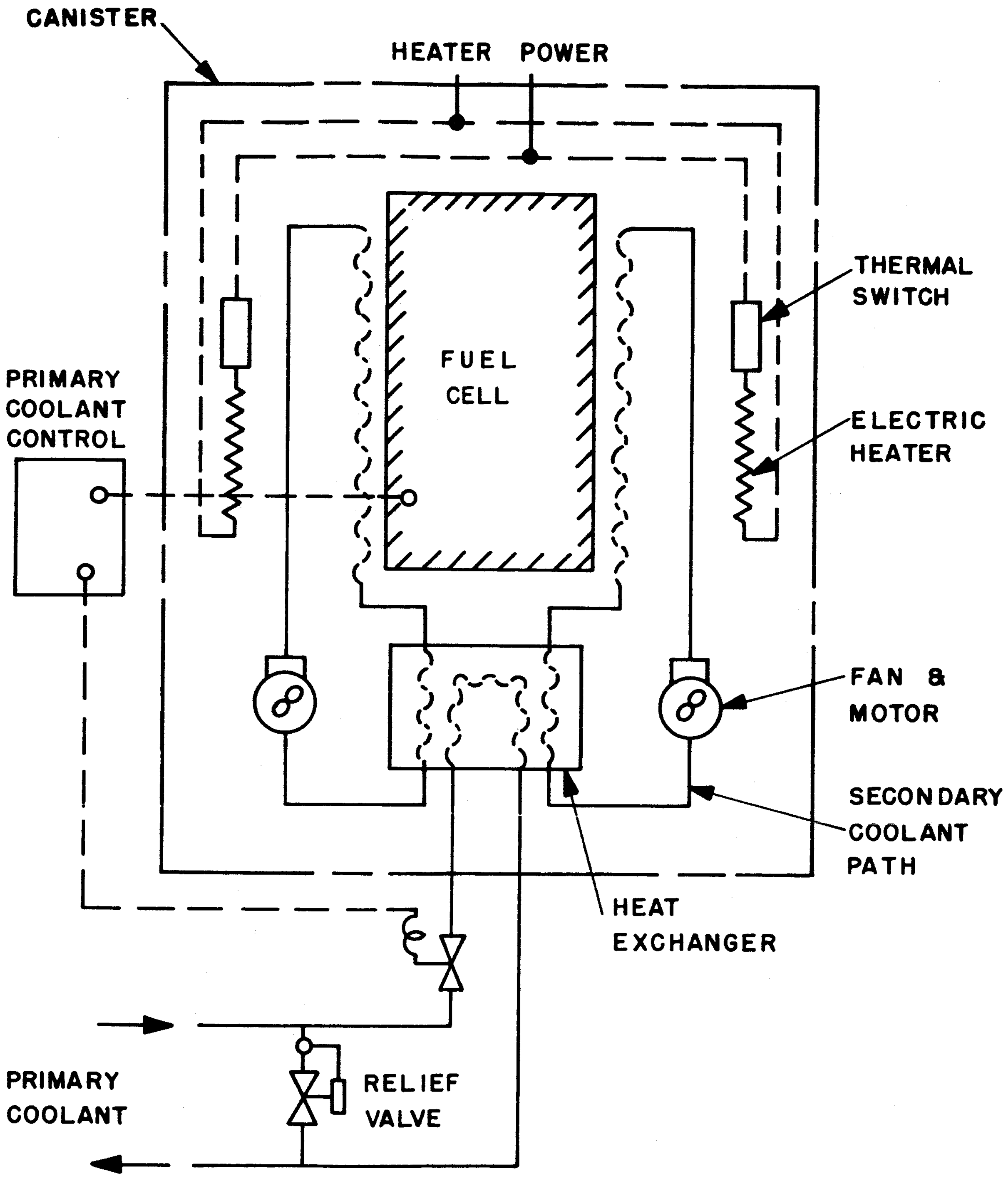

THERMAL CONDITIONING AND CONTROL SUB-SYSTEM

FIGURE 21

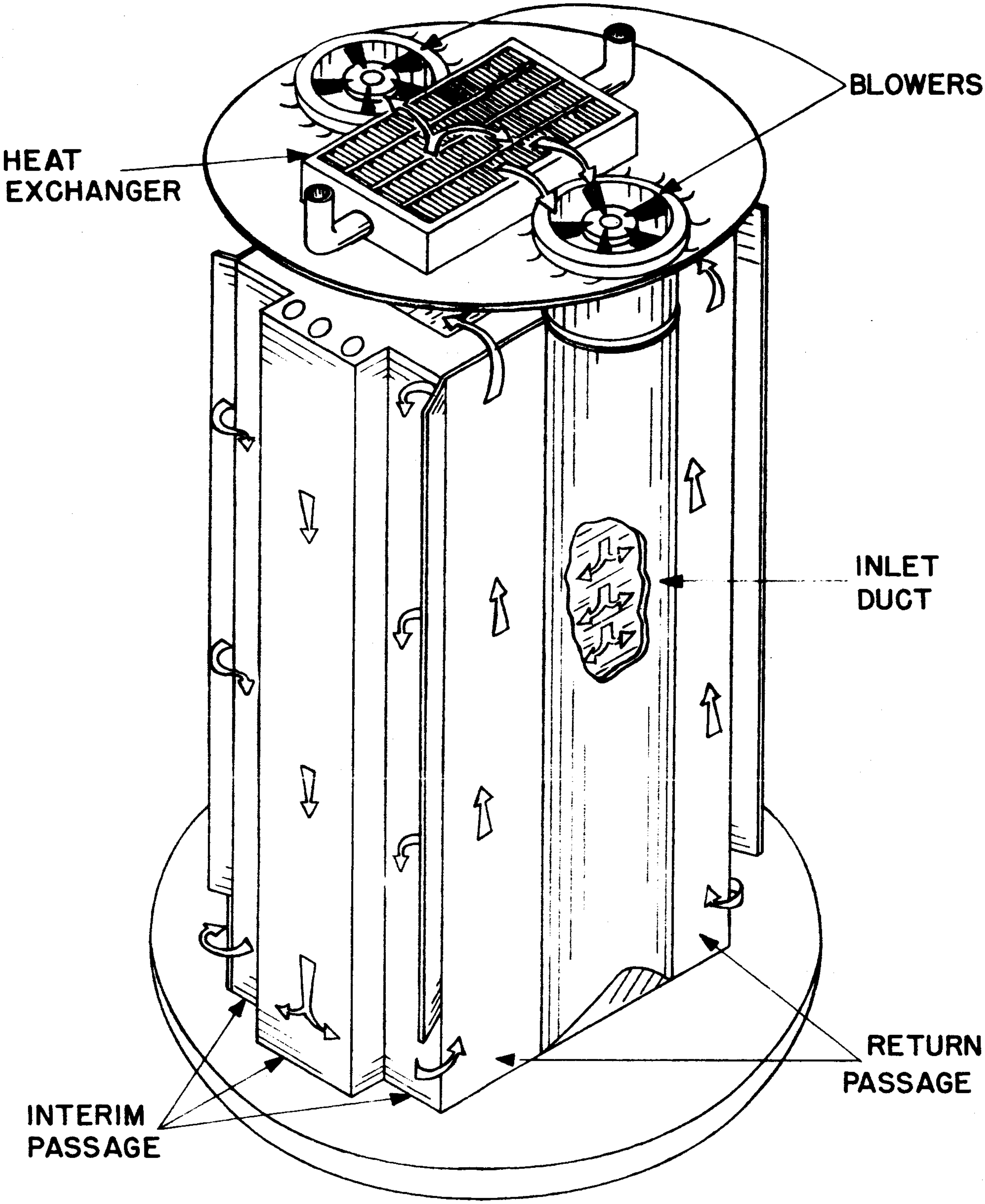

SECONDARY COOLANT SYSTEM CONSTRUCTION

FIGURE 22

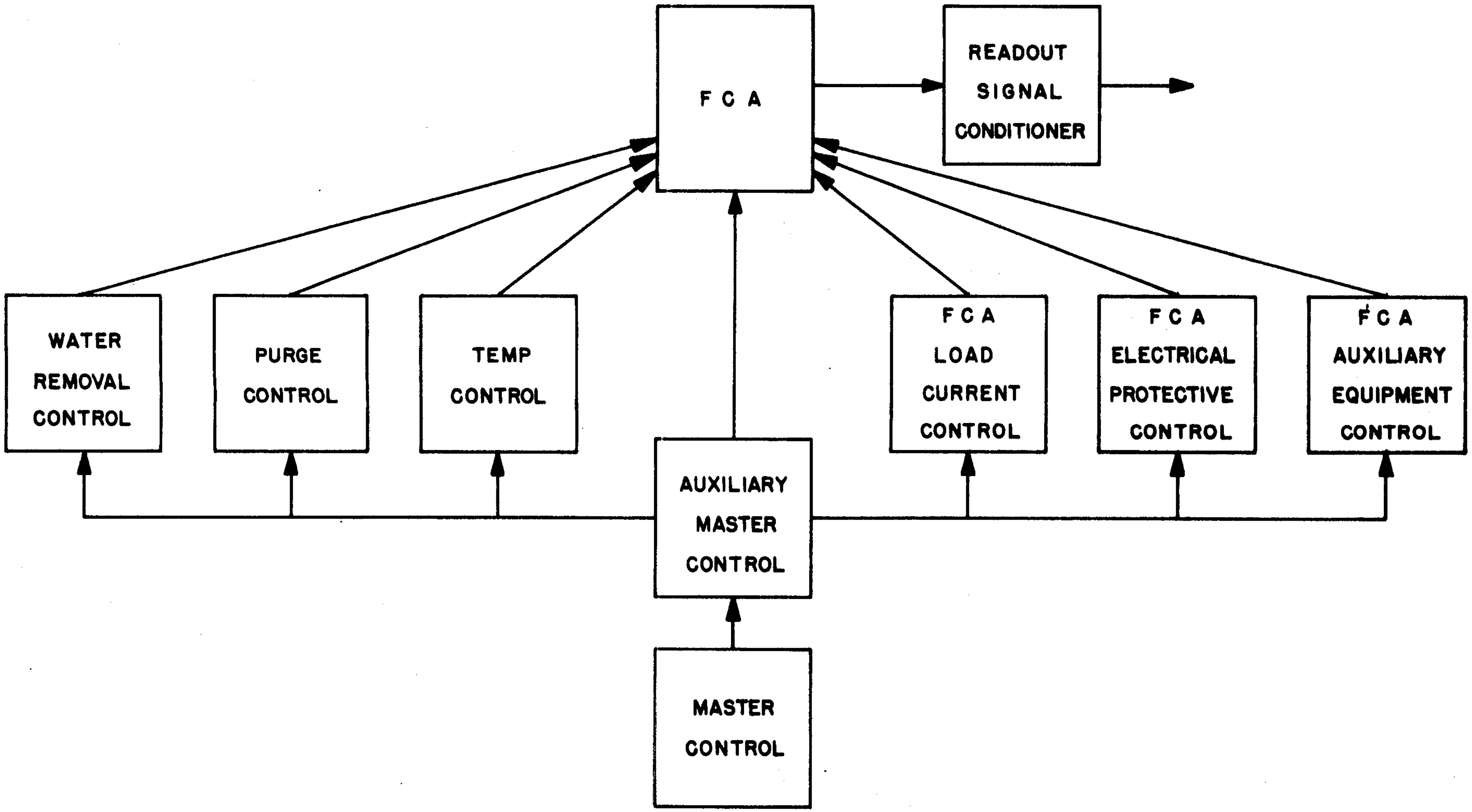

F C A MONITORING AND CONTROL OF MAJOR ELECTRICAL SUBSYSTEM COMPONENTS

FIGURE 23

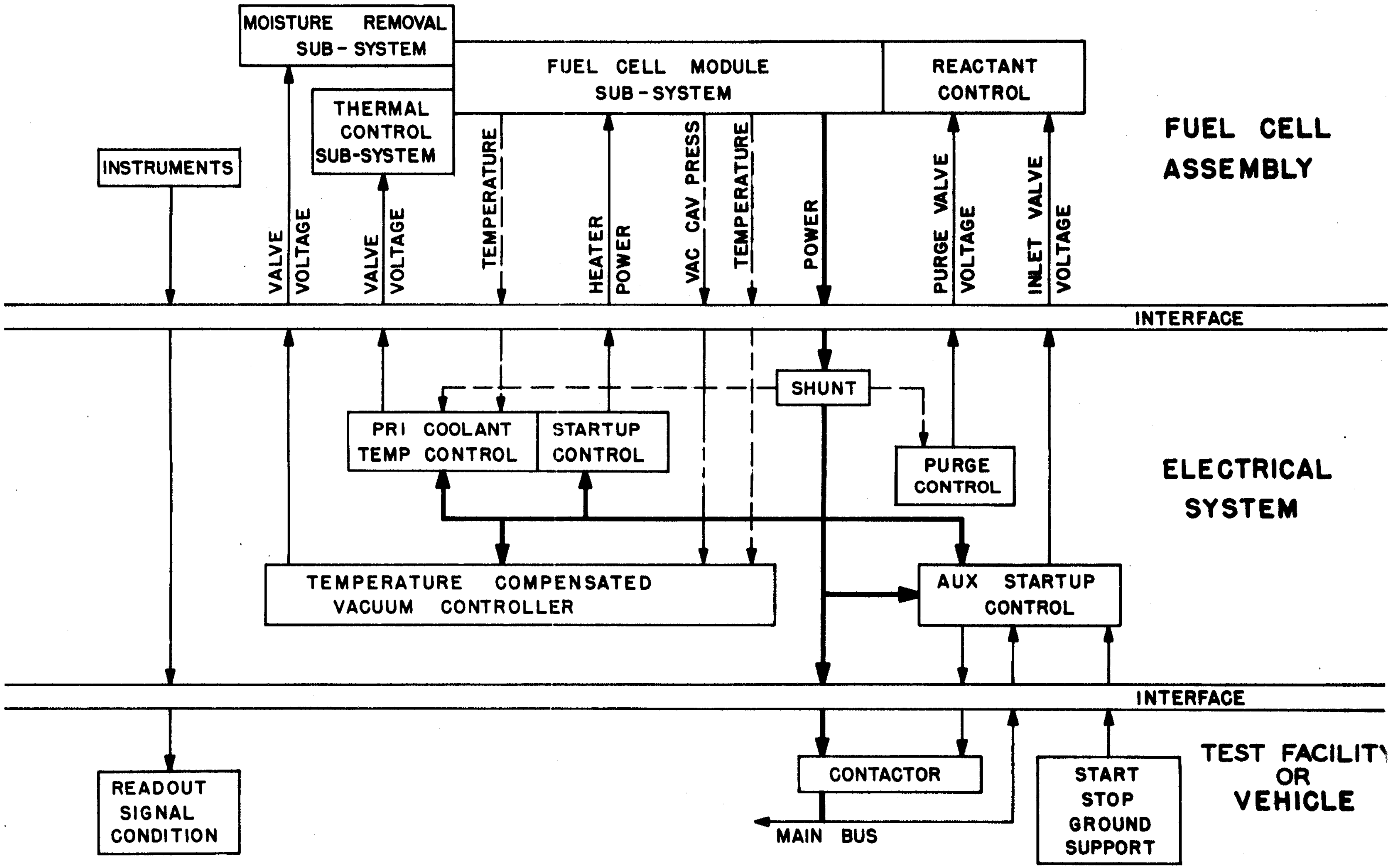

INSTRUMENTATION INTERFACE
BLOCK DIAGRAM

FIGURE 24

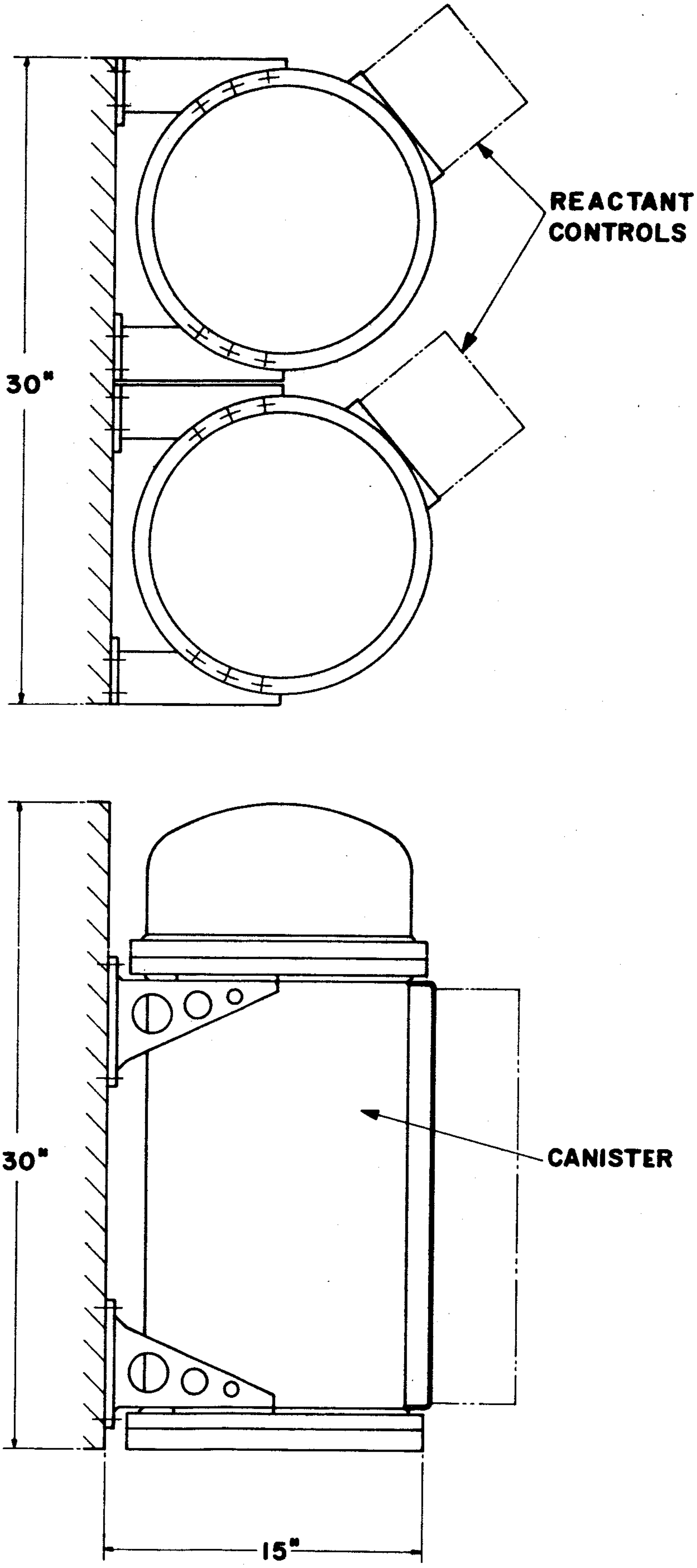

FUEL CELL ASSEMBLY

FIGURE 25

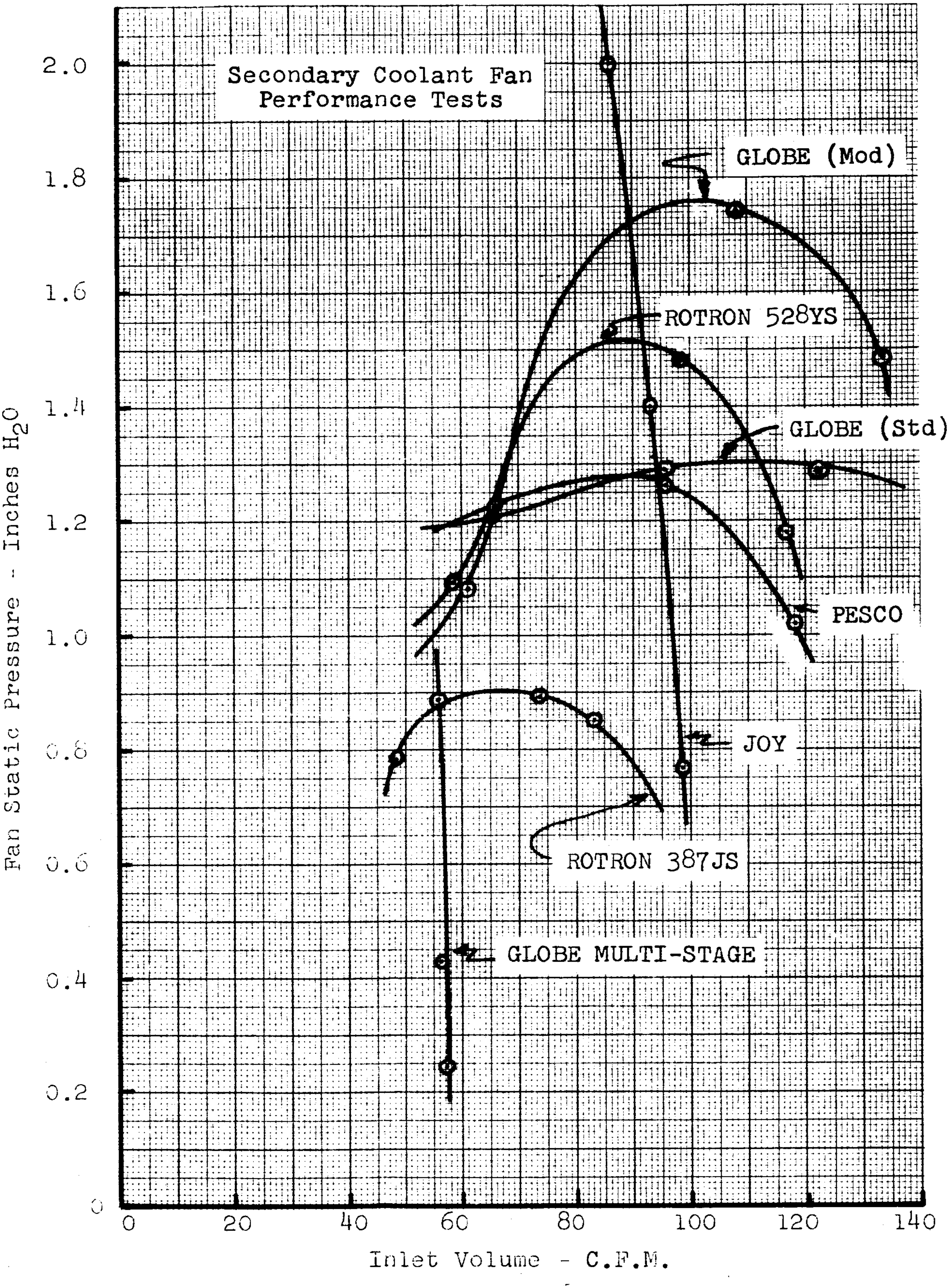
Secondary Coolant Fan
Performance Tests
GLOBE (Mod)
ROTRON 528YS
GLOBE (Std)
PESCO
JOY
ROTRON 387JS
GLOBE MULTI-STAGE
Fan Static Pressure - Inches H_2O
2.0
1.8
1.6
1.4
1.2
1.0
0.8
0.6
0.4
0.2
0
0
20
40
60
80
100
120
140
Inlet Volume - C.F.M.

Figure 26