https://ntrs.nasa.gov/search.jsp?R=19650025811 2020-03-16T22:06:59+00:00Z

AUTO-CONTROL LABORATORIES INC

ANGELES AND PALO ALTO, CALIFORNIA

GPO PRICE $ _____

CSFTI PRICE(S) $ _____

Hard copy (HC) 12.00

Microfiche (MF) .50

ff 653 July 65

N65-35412

(ACCESSION NUMBER) (THRU)

34 1

(PAGES) (CODE)

CR-2318 15

(NASA CR OR TMX OR AD NUMBER) (CATEGORY)

FACILITY FORM 602

HIGH TEMPERATURE THERMOCOUPLE

RESEARCH AND DEVELOPMENT PROGRAM

NIS-1

SUMMARY REPORT NO. T-1097

Contract Number NAS 8-5438

Request Number TP 3-83547

Prepared For

GEORGE C. MARSHALL SPACE FLIGHT CENTER

Huntsville, Alabama

Work Performed By

AUTO CONTROL LABORATORIES, INC.

5251 West Imperial Highway

Los Angeles 45, California

Date of Publication 18 June 1965

Prepared By: R. R. Smith, Jr.

R. R. Smith, Jr.

SUMMARY REPORT

INDEX

Para. No.	TITLE	Page No.
1.0	Summary Report	1
1.1	General	1
1.2	Review of Objectives	2
1.3	Conclusions	6
1.4	Recommendations	7
2.0	Investigations Performed	8
2.1	Sheath	8
2.2	Center Conductor	11
2.3	Insulators	11
2.4	Body	12
2.5	Lead Wires	13
2.6	Protective Coatings	14
2.7	Brazing and Welding	18
2.8	Sheath Formation	19
2.9	Sheath Finishing and Grinding	23
2.10	Sheath Coating	23
2.11	Mandrel Fabrication	23
2.12	Insulating	24
2.13	Assembly	25

SUMMARY REPORT

INDEX

Para. No.	TITLE	Page No.
3.0	Gage Design	26
3.1	First Generation	26
3.2	Second Generation	26
3.3	Third Generation	28
4.0	Recap of Deliveries	28

LIST OF ILLUSTRATIONS

		Page No.
Figure 1	Mandrel Assembly	21
Figure 2	Sheath Assembly	22
Figure 3	First Generation Gauge	27
Figure 4	Second Generation Gauge	29

1.0 SUMMARY REPORT

1.1 General

This report covers work performed under N.A.S.A. Contract NAS8-5438 for research and development of a high temperature thermocouple. Auto-Control Laboratories, Inc., was awarded the contract in June of 1963. The original project termination date was 17 June, 1964. This date was later extended to allow time for review of tests sub-contracted by N.A.S.A. In that time, nine high temperature thermocouples, ACL Type 4735, were scheduled for delivery to N.A.S.A. for test and evaluation.

Due to circumstances beyond the control of either N.A.S.A. or ACL, evaluation tests on both the first and second groups of three thermocouples were delayed. Therefore, the last group of three thermocouples was not delivered, as scheduled by ACL, on 17 June, 1964. They were delivered on 5 October, 1964, after completion of a review of independent evaluation tests performed for N.A.S.A. by Southern Research Institute, Birmingham, Alabama.

The thermocouples were all similarly constructed, with a thermochemically formed tungsten sheath and a tungsten 26% rhenium center conductor arranged in a coaxial fashion. Stem length of the thermocouples was fixed at 1.8 inch.

The nine thermocouples were delivered in three groups of three each. The groups differed slightly in construction, and were therefore identified as First, Second, and Third generation.

1.2 Review of Objectives

Objectives of the program were met with varying degrees of success. The primary objective of operation at 3000°C under adverse conditions of erosion, oxidation and high stress levels for useful periods of time was not accomplished. Individiduals within the family of thermocouples were operated at 3000°C, for short periods of time, in the order of seconds rather than minutes. The EMF of the couple up to 3000°C agreed closely with published and predicted data for this temperature range. Because no rocket engine was available for test, it was not possible to measure performance while being subjected to conditions similar to those of intended use. Test probes run in a gas burner did, however, last for appreciable periods of time, in the order of minutes, under highly oxidizing and erosive conditions. Separate shock (60 g 11 ms) and vibration tests to the 50 g level at 2000 cps, demonstrated that the probes met the shock and vibration requirements. Other R&D effort required by the contract, and results therefrom, are listed below.

a. "Development of the physical structure of an immersed probe to attain minimum drag and highest resistance to bending and shear." Due to the fact that the mounting afforded for the probe was limited to a 7/16" 20NF female mounting boss and no provision for orientation could be made, the probes were fabricated in a cylindrical form, with a semi-logarithmic taper. This construction afforded a shape approximately a constant strength cantilever beam over the whole immersed length. The configuration thus derived was a trade-off, since a cylindrical cross section is a poor aerodynamic shape, although projected area per increment of length decreased as the immersed length increased.

1.2 Review of Objectives

a. (Cont'd.)

Since no finite medium velocities were available for load calculation, estimates obtained from N.A.S.A. personnel were used in design estimates. The sheaths successfully withstood simulated loadings imposed upon them.

b. "Ascertain the best combination of ingredients in the protective coating of the probe to extend the term of oxidation resistance." After an exhaustive literature search, and many burner tests of supposed oxidation resistant coatings, Silicon Oxide and Tungsten Disilicide were selected as the best available. It was found that these coatings did, in fact, extend the life of the probes by a factor as high as 10 over the uncoated Tungsten. No truly protective coatings were found, however.

c. "Determine the best combination of compensated lead wires for use with immersion type probes." Thorough testing of all available types of compensated lead wire were accomplished. Due to the high temperatures encountered in the body of the probes, the compensated lead wire introduced errors in the output due to spurious EMF's, too large to be tolerated. Therefore, it was found necessary to bring out lead wire of the same type as the thermocouple materials, at least to the point where the ambient temperature could be held to less than 100°C.

d. "Incorporate latest state of the art materials as potting and sealing elements in the base of the probe." Again, due to high temperatures

1.2 Review of Objectives

d. (Cont'd.)

developed within the base of the probe during test runs, no good potting or sealing materials were found. Al the organic and inorganic filled epoxies failed, as well as refractory cements. Glasses were found to be too brittle and not compatible with the thermal coefficients of expansion of other materials in the probes. Magnesium Oxide, in finely divided form, and compacted in place was, therefore, used as potting in the base of the probe. To effect sealing, an all welded body construction was used, and the lead wires, enclosed in a stainless steel tube and insulated with oxides, were brought out to a zone of lower temperature, where conventional seals could be used.

e. "Determine effects of reactions between oxide coatings and Tungsten in relation to the EMF output." During the course of this investigation, it was found that oxidation itself had the least serious effect on the EMF output, although it seriously decreases the life of the tungsten. More importantly, in this regard, it was found that the eutectics formed with Tungsten had a far more serious effect, in fact causing irreversible changes in the EMF vs. temperature characteristic of the thermocouple. There seems to be a critical balance between the quantity of the oxide used in the coating, and the temperature - medium combination in which the coated probe is operated. Silicon Oxide, for example, has been observed to break down in the presence of Tungsten at about 3600°F, the silicon forming a silicide of Tungsten which melts at a much

1.2 Review of Objectives

e. (Cont'd.)

lower temperature than Tungsten. The Silicon further diffuses into the Tungsten and poisons the thermocouple junction.

f. "Establishment of rates of erosion for different types of refractory coatings such as Tungsten Disilicide, carbides and cermets when subjected to high velocity, high temperature gas streams." During studies of these materials, it was disclosed that, as in e. above, although some materials showed excellent resistance to high velocity, high temperature gas streams, their usefulness as a coating on a Tungsten substrate in a thermocouple was doubtful because of junction poisoning by the eutectics. This has been a recurrent problem, and is so serious in the case of the Tungsten-Rhenium alloys that companies employing the hot pack cemertation process refuse to attempt to coat them. The coatings can be applied to the Tungsten and the alloys by diffusion or plasma spray. These processes are useful only to the extent that the coated part is kept below the eutectic temperatures in use.

1.3 Conclusions

After review of the program and the data resulting therefrom, the following conclusions can be reached, regarding the type 4735 probes.

a. The type 4735 probes are capable of short term operation at temperatures in the 5000°F region, and for longer term operation in the 4000°F temperature range.

b. Probes coated with Silicon based protective coatings are not suitable for operation in an inert atmosphere, unless they are preoxidized to prevent junction poisoning.

c. The probe structure is capable of withstanding the vibratory and shock loadings specified.

d. The probe structure is capable of withstanding the dynamic loads imposed on it by immersion in a steady high velocity gas stream. It is not known whether the probe will withstand shock loadings imposed by rapid flow transitions from subsonic to supersonic velocities.

e. There are no truly oxidation protective coatings presently available for use on a Tungsten or Tungsten alloy thermocouple probe at the present state of the art.

f. Thermochemically formed Tungsten thermocouples are suitable for use as high temperature probes and are capable of highly repeatable performance under some conditions of use.

g. Unless transitions from the thermocouple materials to so-called compensated lead wires can be held within recommended limits, the compensated lead wire is not suitable for use in a high temperature probe.

h. An optimum configuration for a stem shape cannot be obtained unless

1.3 Conclusions

h. (Cont'd.)

provision is made in the mounting for orientation of the immersed portion of the probe stem relative to flow.

i. There are no true seals or potting compounds available for use in high temperature probes.

j. Formation of eutectics with Tungsten and its alloys is a serious problem when various high temperature materials are used in conjunction with the thermocouple materials as either protective coatings or structural members in the probe. This is unfortunately true of those materials that show excellent resistance to erosion and oxidation.

1.4 Recommendations

On the basis of the results obtained from tests performed by ACL and others, it is recommended that the type of probe resulting from this program be considered for further development for use in specific applications. Its use as a general purpose high temperature probe is not recommended.

2.0 INVESTIGATIONS PERFORMED

2.1 Sheath

The first approach taken by ACL toward the development of a high temperature refractory metal thermocouple was a "brute force" technique, in which a thick wall Tungsten sheath, fitted with an insulated center conductor of Tungsten 26% Rhenium, was mounted in a stainless steel body. These probes, ACL Part Number 4734, were evaluated by N.A.S.A. prior to the issuance of the contract under which work was performed by ACL during the period June, 1963 to July, 1964.

Tungsten was retained in further work because of its high melting point, the relative ease with which various coatings could be applied, and its formability. Tungsten-Rhenium alloys, although demonstrating better ductility than Tungsten, were available at that time only in wire and tubular forms. They are, moreover, extremely difficult to coat with oxidation resistant materials.

The greatest single problem encountered in this project was that of providing resistance to oxidation and erosion, while avoiding contamination or eutectic formation in the Tungsten sheath and the junction between the Tungsten and Tungsten 26% Rhenium alloy. This problem was never entirely solved. Fabricability of the Tungsten to desirable shapes without excessive cold working was provided by use of the thermochemical process (vaporization of Tungsten Hexafluoride and deposition of the metal) and careful attention to mandrel design.

2.1 Sheath (Cont'd.)

Oxidation of Tungsten, and other refractory metals - Molybdenum, Tantalum, and Columbium, is a problem to which a great amount of work has been devoted in recent years, but without notable success at temperatures above 2500°F to 3000°F.

The manner in which Tungsten oxidizes, unlike some other metals, is particularly discouraging. Iron, for example, tends to provide protection during oxidation. In Tungsten, oxidation may start at 1000°F or even less, with the formation of its low temperature oxides. These give a small degree of protection from about 1200°F to about 1750°F. These low temperature oxides then scale off, and the Tungsten surface is left unprotected. As the temperature rises above 1750°F the oxides sublime away. At just over 2000°F, the sublimation rate becomes so rapid that large weight losses are seen. The thicker oxides forming above 1200°F are extreme, and usually cause a catastrophic deterioration of small structural parts such as a thermocouple stem.

Additionally, although cold strength is quite high, the strength of Tungsten decreases very rapidly above 3000°F, as contrasted with graphite, whose strength increases with temperature, reaching a maximum at about 4500°F. Oxidation of graphite, however, starts at a lower temperature than with Tungsten. This sort of oxidation - strength problem is common to all of the refractory metals.

2.1 Sheath (Cont'd.)

Strength, however, is not the only important consideration. Ductility must also be considered. Both qualities are related to the lattice structure and the crystalline grain size. Nothing much can be done about the lattice structure, since it is a basic characteristic inherent in the pure material. It can only be altered by introducing atoms of impurities. (Which would change the thermo-electric properties.) Grain size, however, can be initially controlled. Small grain size is associated with ductility, and is normally seen at low temperatures. At higher temperatures, recrystallization occurs and grain growth is seen. This means that, in the refractory metals, low ductility and brittle behavior can be expected. Contributing to the grain growth in thermo-chemically formed Tungsten is the amount and degree of work performed on the part. In this material, it has been observed that large crystal formation is retarded, even after exposure to high temperature, if provision of nuclei for grain growth is avoided by refraining from surface work on the raw parts. ACL has found that light surface working can be tolerated, but deep surface work such as heavy grinding, etc., will inevitably furnish nuclei, and rapid crystal growth will occur. Some recent work by others with Tantalum* has resulted in retention of small grain size, with the attendant advantage of strength and ductility many times that of the large crystal form. This material, designated SGS (stable grain size) Tantalum, retains all the electronic, physical, and chemical qualities of normal Tantalum, but is claimed to have 300% greater strength at high temperature.

2.1 Sheath (Cont'd.)

Because of the highly successful work done with Thoria Dispersion in Nickel, it was hoped that results equally as good could be expected with thoriated Tungsten. Such, however, was not found to be the case.

2.2 Center Conductor

Various thermoelectric systems are known to have good EMF vs. Temperature characteristics at elevated temperatures. Among the materials available for use opposite Tungsten are: Iridium, Rhenium, and various alloys of Tungsten 3% Rhenium, Tungsten 5% Rhenium, Tungsten 25% Rhenium, and Tungsten 26% Rhenium. The selection of Tungsten 26% Rhenium as the center conductor was made because the output vs. Tungsten was higher, over the known and established range (0°F - 5000°F), than any of the other combinations. Other reasons for its choice were: availability, cooperation of the manufacturer in effecting good delivery, and verification of calibration data, price in small quantities, previous experience in other applications, its known aging and stability characteristics.

2.3 Insulators

Many types of insulating materials were investigated for possible use in this project. Based on an exhaustive literature search, as well as ACL's previous experience with high temperature insulators, it was decided that only three insulators, Magnesium Oxide, Beryllium Oxide, and Thorium Oxide were suitable, and even these could be used only in zones where the temperature did not exceed 4200°F. Of these three

2.3 Insulators (Cont'd.)

insulators, Beryllia was slightly better than the others, but only by a few hundred degrees Fahrenheit.

Experimental evidence showed that it was possible to eliminate oxide insulation in the hottest zone of the probe, if the internal geometry was such that contact between the center conductor and the sheath could be prevented, to avoid secondary junctions and the resulting spurious EMF.

Such probes were run in ACL's high temperature black body furnace through many temperature cycles to 5000°F with excellent repeatability. Similar results were not apparently obtained, however, by Southern Research Institute in their calibrations. A full report on their evaluation of the Type 4735 probes was not available as this report was prepared.

*Hoskins Manufacturing Company

2.4 Body

The material selection for the body of the probe was based on performance of materials used in previous probes, as well as calculations and experiments. It was feared at first that, because of the high temperatures of the Tungsten sheath, its relatively high coefficient of thermal conductivity, and the large temperature differential, the temperature at the body

2.4 Body (Cont'd.)

would be too high to consider the use of stainless steel. Among metals considered for use were capacitor grade Tantalum, Molybdenum, TZM (an alloy of Titanium, Zirconium and Molybdenum) and certain of the noble metals and their alloys. Considering the cost and fabrication problems attendant to the use of these materials, however, it was considered prudent to perform an experiment to determine the effect of running a Tungsten sheath at high temperature, mounted in stainless steel.

This test, in which the sheath tip was held above 4500°F, did not have any apparent effect on the stainless steel, other than to discolor it. The calculated temperatures in the base were apparently in error because of assumptions made of the internal thermal resistances. A heat sink, fabricated of 1/4" thick steel plate, 8" square was used to mount the probe. Such a heat sink was not considered overly large. This approach was taken because no good estimate of mounting temperature was available. On the basis of the procedures described above, series 304 stainless steel was chosen as the material to be employed in the body.

2.5 Lead Wires

It was an objective of this project to determine the best combination of compensated lead wires to use on a high temperature probe. All commercially available compensated lead wires were thoroughly tested. These lead wires all incorporate either Copper and a Nickel alloy, or P and N types of Nickel alloys. ACL found that none of them performed

2.5 Lead Wires (Cont'd.)

satisfactorily when the area of their junction with the thermocouple materials was in excess of 100°C. Errors introduced by their use above 100°C were so large that their use became impractical. They could be employed, however, at low temperatures (0°F and below) without appreciable errors resulting.

As a consequence of ACL's tests, it was decided to use Tungsten and Tungsten 26% Rhenium wire in lead assemblies.

2.6 Protective Coatings

In searching for protective coatings for Tungsten, one prerequisite had to be borne in mind: the coating had to be compatible with the use of Tungsten as one leg of a thermocouple, and not as a simple structural member. Thus, any coating had to be regarded in its effect on the thermoelectric properties of both the Tungsten substrate and the Tungsten 26% Rhenium alloy in the junction. It had been noted previously in practice, as well as in the literature, that diffusion occured at high temperatures with a subsequent junction poisoning and deterioration of the thermocouple output. These effects had to be considered, not only initially in coating processes employing high temperature, but also with time and temperature cycling. This excluded a number of promising coatings. Ideally, any coating considered for use had to be capable of meeting two primary objectives:

1) Prevent diffusion of Oxygen ions into the material.

2.6 Protective Coatings (Cont'd.)

2) Prevent escape of the metal ions out of the material. The coatings should, moreover, have a low vapor pressure at operating temperature, a melting point higher than the operating temperature, and low tendency to react or combine with the substrate and the medium of operation.

When the survey of coating materials was started, a first look was taken at the application methods employed with available coatings. These were: flame spraying, plasma spraying, dipping, pack cementation, vapor deposition, and combinations of these processes.

Outstanding, at first examination, because of their refractoriness, were the following materials.

1. Metallic diffused alloys of Silicon, Titanium, or Zirconium with controlled oxidation to form a metal-bonded, metal modified outer layer.
2. A deposition of elemental Silicon, with controlled oxidation to form its oxides.
3. Carbides and borides deposited by plasma spraying, such as Hafnium Carbide and Tantalum Carbide - M. P. over 7000°F. Titanium Boride, Zirconium Boride, M. P. over 5000°F.
4. Carbides - A number of carbides with high melting points are known. Among these are Hafnium Carbide and Tantalum

2.6 Protective Coatings (Cont'd.)

4. (Cont'd.)

Carbide, both with melting points over 7000°F. Silicon Carbide is known to be capable of oxidation resistance at 3000°F to 4000°F. They have reasonable coefficients of expansion and are of relatively good strength.

5. Borides - Zirconium Boride - M. P. 5500°F and Titanium Boride - M. P. 5320°F were reported to have oxidation resistance.

6. Nitrides - Boron Nitride has been known to have good high temperature characteristics with oxidation resistance, but most have poor oxidation resistance.

7. Oxides - Many of these have been tried, notably Thorium Oxide - M. P. 5970°F, Magnesium Oxide - M. P. 5120°F, and Zirconium Oxide - M. P. 5500°F. These ceramics all have one principal fault in common when used as thin coatings on Tungsten: They tend to crack and erode away under flow conditions. Magnesium Oxide reacts with Tungsten at about 4200°F. Others exhibit poor thermal shock and are generally incompatible as regards coefficients of thermal expansion.

8. Cermets - These have been used in thermocouple protection tubes, but present many of the problems associated with ceramics when attempts are made to apply them to a thermocouple sheath.

2.6 Protective Coatings (Cont'd.)

9. Composites - Two types of composites - Chrome Composite and Tungsten Composite evidenced good resistance to temperature and oxidation, but were considered poor choices for thermocouple use because of internal transpiration, and their insulating qualities - either of which would tend to introduce errors in the thermocouple output.

The carbides seemed an obvious choice until the secondary effects on the Tungsten substrate, when viewed as a leg of a thermocouple, were considered. Reaction with the Tungsten was a certainty, and this effect had been previously noted by ACL, with disastrous results, in other high temperature thermocouples. They also tended to accelerate brittle failures in Tungsten.

As seen in tube collapse tests performed on Tungsten, stress relief and crack propagation are serious problems. Ductile flow relieves stresses built up during load application until the flow rates become excessive. Then, in brittle materials such as Tungsten (or ceramics) the rapid stress relief results in a brittle fracture. Likewise, in brittle materials as contrasted with ductile materials, crack propagation is usually continuous once the crack starts, without an increase in stress. Thus, any coating process, or coating material, that would enhance grain growth and brittleness was eliminated from consideration.

2.7 Brazing and Welding

One of the very practical problems associated with fabrication of high temperature probes lies in the techniques employed for joining refractory metals to each other, and to lower temperature metals, such as the stainless steels. Thus, development of joining techniques were given considerable attention. It was found that any good grade of high temperature silver solder (1700°F) could be used, if care was taken in its use. Fluxes seemed to have little or no effect on wetting and adherence. Of the known welding techniques, electron beam welding was probably the most desirable because of the easily attained high temperatures, and the precision with which the weld area can be controlled. This method would lend itself better, however, to relatively large production, rather than the very small quantities used in development work.

On the basis of work previously done by ACL, as well as the literature, the T.I.G. process, with specially fabricated heat sinks, was used for all refractory metal welding in this project. Caution must be used when the Tungsten is in proximity to steel during welding, because Tungsten readily goes into solution in molten steel. Since junctions were formed thermochemically, there was no need to weld the Tungsten to the alloys.

A serious disadvantage in welding Tungsten is that the high temperatures required cause recrystallization, and large grain formation enhances the possibility of brittle fractures at, and in the region of the weld-joint,

2.7 Brazing and Welding (Cont'd.)

Care must also be taken to minimize the contact of air with the hot Tungsten to avoid oxidation, which starts at relatively low temperatures in the presence of Oxygen.

2.8 Sheath Formation

At the beginning of the project, it was not known definitely whether means of orientation could be provided for the portion of the sheath immersed in the medium. It was assumed that some such arrangement might be possible. Therefore, considerable attention was paid to geometry other than the cylinder. Two sheath cross sections, biconvex and rhombus, were first selected by ACL as suitable for the anticipated Mach regime. These were selected because of their usefulness as low drag forms for both high subsonic and supersonic conditions. Both must, however, be oriented to flow.

The thermochemical formation process was ideally suited to the formation of Tungsten to shapes such as those mentioned above. Mandrels of a mild steel, over which the Tungsten is deposited, are relatively easy to form, since they can be made by standard machine shop practices. They are removed easily and effectively by acid etching after the sheath is formed. Since the Tungsten conforms nearly exactly to the mandrel only light surface finishing, if any, is required to arrive at the desired shape.

2.8 Sheath Formation (Cont'd.)

Later in the project, it was found that orientation of the probe was not possible in its intended mounting, which was defined as a 7/16"- 20 thd female boss. The sheath configuration finally selected was cylindrical, with a semi-logarithmic taper from base to tip. Within limits imposed by the diameter of the base, compared with the immersion length, an approximation of a constant strength beam resulted.

The mandrels were made with a hole through the center from end to end, and were machined to the final outside dimensions, less the wall thickness. A W-W26Re wire was run through the longitudinal center hole and was permitted to extend the desired amount for junction formation from the mandrel tip. The mild steel of the mandrel was then crimped evenly around the W-W26Re wire. The mandrel assembly is shown in Fig. 1.

The mandrel assembly was then mounted vertically, tip up, within a quartz tube surrounded by an induction heating coil, and was brought up to formation temperature. Vaporized Tungsten Hexafluoride (WF_6) was then fed into the quartz tube at a controlled flow rate, and the mandrel assembly was revolved during the sheath formation. When the build up of Tungsten had reached the desired thickness, the process was stopped. After cooling and inspection, the part was immersed in hot, concentrated Hydrochloric acid (HCl) until the mild steel mandrel was dissolved. The acid was then neutralized, and the part washed in water before drying. A sheath assembly is shown in Fig. 2.

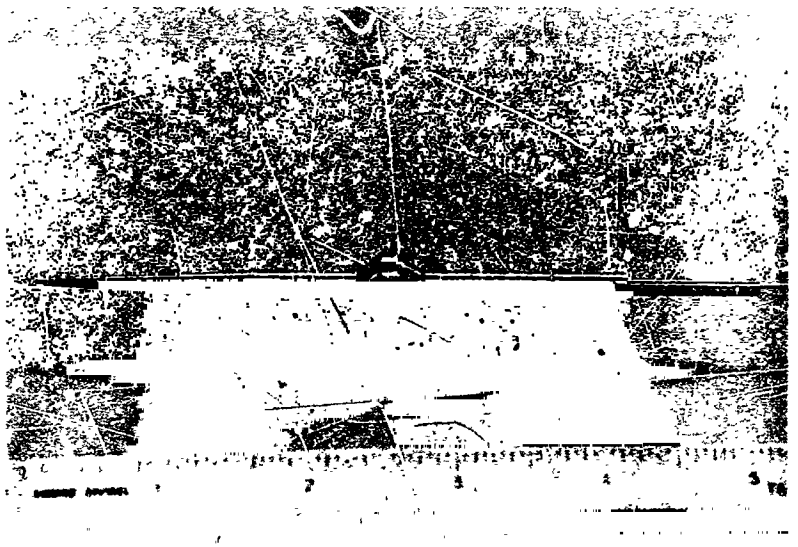

Figure 1 Mandrel Assembly

2.9 Sheath Finishing & Grinding

Ordinarily, no surface finishing was required. When required, as little material as possible was removed. The primary consideration in grinding vapor deposited Tungsten is to avoid deep grinding to minimize the possibility of supplying nuclei for grain growth.

2.10 Sheath Coating

Two types of coatings, Silicon, and Zirconium Oxide were used on the nine type 4735 gauges delivered to N.A.S.A. The first six were all siliconized. Of the last three, two were siliconized, but the third was coated with Zirconium Oxide.

The Silicon was applied by the same process used in formation of the sheath. Being vapor deposited, it was quite pure.

The Zirconia was applied by the plasma spray process, and was built up to a thickness of about .005 inch.

2.11 Mandrel Fabrication

The mandrels, over which the sheaths were formed, were fabricated from mild steel to the exterior shape of the part desired. The mandrel dimensions were those of the final part, less the wall thickness of the sheath. The compression mounting area of the sheath assembly, essentially a double truncated cone, was formed by drilling a Tungsten rod, then machining a double cone. The hole in the Tungsten

2.11 Mandrel Fabrication (Cont'd.)

rod was of a diameter such that it was a slip-fit to a step on the mandrel. During the deposition process, the vapor deposited Tungsten formed over the mild steel mandrel, and joined with the Tungsten slug. The slug remained in the assembly after the acid bath, since it is not attacked by Hydrochloric acid.

2.12 Insulating

The only insulations used as such in the Type 4735 gauges were Magnesium Oxide and Beryllium Oxide. In the delivered items, all insulation except Magnesium Oxide was eliminated because any type of insulation available for use in the immersed portion of the sheath either melted or became conductive as the temperature exceeded 4000°F. After calibrations at ACL showed it was possible to obtain repeatable results without insulation in the tip region, Magnesium Oxide only was used in the body and after portion of the sheath assembly. MgO tubing was used wherever support for the center conductor was required, or for support and isolation aft of the transitions from Tungsten sheath to Tungsten lead wire, and from the W26Re center conductor to W26Re lead wire. Reagent grade MgO powder, well compacted, was used to fill voids remaining in the body cavity.

Lead wires from the body to the bare wire termination were insulated with Aluminum Oxide tubing.

2.13 Assembly

Assembly of the piece parts of the gauge varied slightly from one generation to the next. All, however, were essentially the same. The transitions were made first. The sheath sub-assembly was fitted with a helical Platinum wire seal and damper, then inserted through the main body. The threaded compression cone-nut was then inserted into the body and run down against the aft-cone portion of the sheath until securely in place. The body cavity was then filled with the powdered MgO and compacted. The aft body section with lead extension tubing welded in place was then T.I.G. welded to the main body section. The whole assembly was then evacuated and back-filled with Argon gas, following which the seal at the end of the lead assembly was tightened. Approximately six inches of the thermocouple wires were left for connection to test apparatus.

Fabrication and assembly of the first generation gauges was somewhat different, in that the body parts were threaded for screw connections throughout. This initial method was used in order to provide ease of disassembly for experimental purposes. Because of difficulty in obtaining a good seal, this method was abandoned in favor of the all welded assembly, as used in the second and third generation gages.

3.0 GAGE DESIGN

3.1 First Generation

Design of the first generation gauges was based essentially upon the ACL Type 4734 gauges, which had been previously tested by N.A.S.A. These tests were fully described in Southern Research Institute Final Report on Task Order 1, entitled "Evaluation on the Performance of Tungsten - Tungsten 26 Rhenium Thermocouples to about 5000°F" (N.A.S.A. Contract Number NAS 8-5196). This report, in its conclusions, placed an upper limit of about 4200°F for ±7% accuracy, and an absolute upper limit (failure point) of about 4500°F for the Type 4734 thermocouples. These limits were attributed to the use of Beryllium Oxide as insulation within the sheath.

The coaxial construction of the Type 4734 gauge, with Tungsten as the sheath, and Tungsten 26 Rhenium as the center conductor, was retained in the Type 4735 gauges delivered to N.A.S.A. The geometry of the sheath was changed from a straight cylinder with stepped tip, to a tapered cylinder, and the use of insulation within the sheath was curtailed, to prevent conduction as the insulator reached its upper limit of usefulness. A first generation gauge is shown in Fig. 3. Details of first generation gauge construction are shown in Appendix "A".

3.2 Second Generation

After difficulties with sealing were encountered with the first

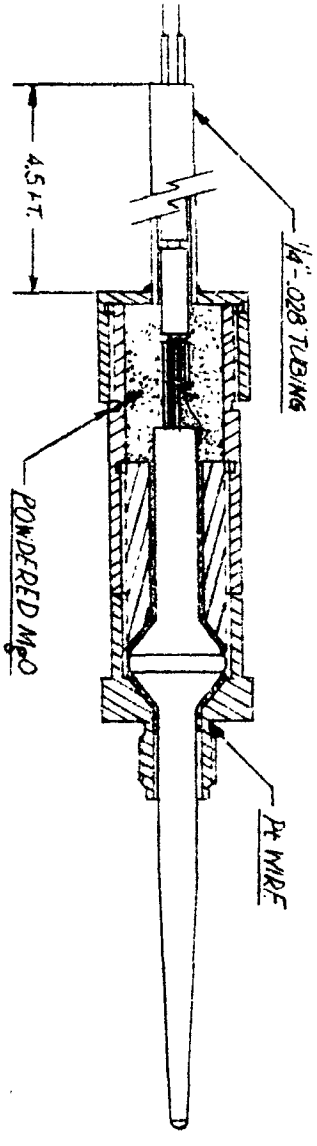

FIGURE 3

Assembly Sketch, ACL Gauge, Type 4735, 1st. Generation

3.2 Second Generation (Cont'd.)

generation gauges, the screwed-joint construction was changed to an all-welded assembly. This also reduced the weight of the gauge. Details of second generation gauge construction are shown in Appendix "A". A second generation gauge is shown in Fig. 4.

3.3 Third Generation

The third generation gauges were identical to the second generation gauges except for details in lead wire assembly. One of three gauges in the third group shipped was plasma spray coated with Zirconium Oxide rather than the Silicon used on all other Type 4735 gauges. This gauge is identified by a "Z" following its serial number.

4.0 RECAP OF DELIVERIES

Gauges	Quantity	Serial Number	Date
1st Generation	3	002, 003, 004	17 Oct., 1963
2nd Generation	3	007, 008, 009	26 Feb., 1964
3rd Generation	3	010, 011, 012Z	5 Oct., 1964

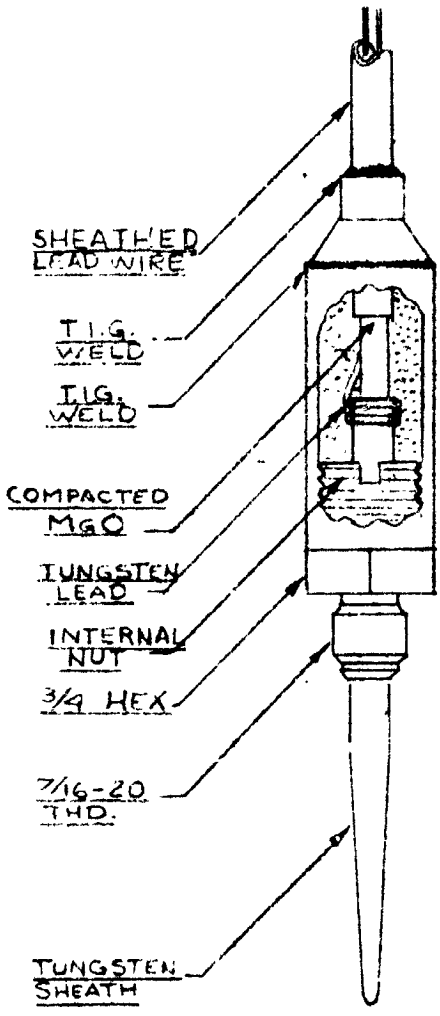

Figure 4 - TYPE 4735 GAUGE

2nd GENERATION