General Disclaimer

One or more of the Following Statements may affect this Document

- This document has been reproduced from the best copy furnished by the organizational source. It is being released in the interest of making available as much information as possible.

- This document may contain data, which exceeds the sheet parameters. It was furnished in this condition by the organizational source and is the best copy available.

- This document may contain tone-on-tone or color graphs, charts and/or pictures, which have been reproduced in black and white.

- This document is paginated as submitted by the original source.

- Portions of this document are not fully legible due to the historical nature of some of the material. However, it is the best reproduction available from the original submission.

X-RAY AND γ-RAY ASTRONOMY

by

Mincru Oda

Department of Physics

and

Laboratory for Nuclear Science
Massachusetts Institute of Technology

and

Institute for Nuclear Study
University of Tokyo

Presented at the Cosmic Ray Conference by IUPAP, London, Sept. 6-17, 1965

This work is supported in part through funds provided by the National Aeronautics and Space Administration under Grant No. NsG-386 and by the Atomic Energy Commission AT-(30-1) 2098.

ABSTRACT

The purpose of this paper is to review and discuss observational facts and related arguments concerning x-rays and γ-rays of cosmic origin which have become available in the past few years. First, observational methods will be summarized briefly. Next, a review of the many unexpected results of observational facts of cosmic x-rays in the $1 \sim 10$ kev range is presented. Physical processes of x-ray generation in discrete x-ray sources are briefly discussed. While the discovered discrete x-ray sources are in the galactic plane, an isotropic component which is likely of extragalactic origin seems to exist. Observations of radiation from several tens of kev up to γ-ray energies will be reviewed. Though no γ-rays of proven cosmic origin have been detected, upper limits set for various suspected discrete sources and the isotropic component have considerable physical significance.

I. Introduction

Studies of cosmic γ-rays and x-rays have opened a new field of astrophysics and provided new tools to explore the universe. In particular, observations of cosmic x-rays have provided a continuing source of significant information since their discovery. In the case of γ-rays (> several Mev), no γ-rays of proven cosmic origin have been detected so far. There is, however, some evidence for a general background and even the upperlimits of intensities given to various astronomical objects have considerable astrophysical significance.

Since any possible physical processes of γ-ray and x-ray generation are deeply related to the physical nature of the source, it is clear that γ-ray and x-ray astronomy will play fundamental roles in understanding various astronomical problems.

Various mechanism for the production of γ-rays and x-rays through the interaction of energetic protons or electrons with the interstellar medium or photons are summarized schematically in Fig. 1. In the figure, relations are indicated for various generation mechanisms along the generating media (indicated by circles), the input protons and electrons and the generation outputs (indicated by squares).

As the generation mechanism of γ-rays, we consider bremsstrahlung in the interactions of energetic electrons with interstellar matter and the decay of neutral pions produced in collisions between cosmic ray particles and matter or photons. Compton scattering of low energy photons by energetic electrons (inverse-Compton effect) was discussed

for the generation of x-rays. (Felton and Morrison 1963) The frequency range of synchrotron radiation emitted by electrons moving in magnetic fields may extend to the x-ray bend if the energy of the electrons is sufficiently high. Thermal radiation of a very hot body of temperature $10^7 \sim 8^\circ K$ is in x-ray band. Characteristic x-rays are produced after a shell electron of an atom is knocked out by a high energy particle.

Several review articles are available for physical processes for x-rays and γ-ray production (Gould and Burbidge 1965, Ginzburg and Syrovatsky 1964, Hayakawa and Matsuoka 1965). There are also reviews which include experimental aspects. (Garmire and Kraushaar 1965, Giacconi and Gursky 1965, Friedman 1965, Hayakawa et al 1965 b).

Whether one or more of these physical processes can be compatible with the observation and with various astrophysical parameters or not is the main point of the interpretation of observational facts. Successful interpretation of the facts, together with further progress in observations will lead us to a deeper understanding of astronomy.

II. Atmospheric and Interstellar Absorption of Electromagnetic Radiation:

Fig. 2 shows the atmospheric absorption of electromagnetic radiation. Curves represent atmospheric levels where the intensities of the radiaton of various energies are reduced to 1/2, 1/10 and 1/100 of initial values. It is obvious that except for the optical and radio bands the electromagnetic spectrum is observable only outside of the atmosphere.

Outside of the atmosphere, the radiation is absorbed by the interstellar medium and starlight photons.

The curves in Fig. 3 represent the range of exploration in the space with radiation of various wavelengths. The curve determines the density of the interstellar matter (in atoms/c.c.) times the distance (in light years) to reduce the intensity of radiation to 1/e of initial value. Assuming the average density of the matter to be 0.3 atoms/c.c., the galactic center and the Crab Nebula are indicated on the figure. Interstellar space is essentially opaque in the region from 912 Å (13.5 e.v.) to about 50 Å because of the absorption due to the process of ionizing interstellar hydrogen, helium and other gases.

In the γ-ray energy region, the absorption or the attenuation of the radiation, due to pair production in collision with charged particles and Compton scattering is very little and the γ-rays can pass through the inter-galactic space as long as the Hubble distance ($1.3 \cdot 10^{28}$ cm).

The absorption of energetic γ-rays of energy $> 10^{12}$ e.v. by pair production in photon-photon collisions may have a mean free path comparable to the Hubble radius. For the extremely high energy range of gamma-rays, $> 10^{17}$ e.v. it may be necessary to take into account the absorption by collisions with photons of very long wavelength. (Goldreichand and Morrison 1964).

III Method of Observation: (1)*

Thus far, most x-ray observations have been made with sounding rockets (Aerobee) which reach a maximum altitude of about 200 km allowing observations above 80 km for about 5 minutes. The rockets have carried

* Further details will be described by Giacconi et al on the Proceedings of Varenna Summer School on High Energy Astrophysics (1965).

various detectors of sensitive area from 10 cm^2 up to about 1000 cm^2.

The techniques used to scan the celestial sphere with a rocket borne detector are illustrated in the following three typical cases.

a) Rapidly Spinning Rocket

The rocket is spun at a spinning frequency of about two revolutions per second and approximately maintains the frequency until it re-enters the atmosphere which reduces the frequency through atmospheric drag. The motion of the rocket while it is outside of the atmosphere can be treated as a freely spinning rigid body as a first approximation. The motion consists of a spin with constant angular velocity around the minor axis of inertia and a precession of the spin axis around an axis fixed in the space and parallel to the total angular momentum (precession axis). The half apex angle of the precession cone in this case usually is less than 15°. Suppose that the detector has a rectangular field of view in the rocket frame of reference as is shown on the celestial sphere in Fig. 4. A band of sky is scanned by the field of view by the spinning of the rocket. While the spinning axis precess, an even broader region of the sky is scanned as is indicated in the figure. The celestial source is seen whenever the field of view transit the source. The source is seen periodically provided that it is kept in the band which the field of view scans. The period between successive transits of the source is essentially equal to the spin period, which is subject to a slight secular variation and a small periodical variation produced by the precession of the rocket.

The number of counts per passage of the source across the field of view is usually small and delicate superposition or "synchronization" of the counts as a function of the azimuth of the detector axis with respect to the revolution is necessary in the course of analysis of data in order to obtain significant results. This is the typical method of analysis which ASE-MIT group adopted.

b) Slowly Spinning Rocket

In some experiments, the rocket was despun or the spin velocity was reduced by means of gas jets after it reached a sufficiently high altitude. Then the apex of the precession cone greatly increases and the rocket starts to tumble. Thus, a larger portion of the sky may be scanned. Although the source is seen much fewer times, the sky is scanned much more slowly and the counts during one revolution may have considerable significance. For example, Friedman et.al., (NRL-group) covered most of the celestial hemisphere above the horizon by a detector with nearly a circular field of view of 14° in diameter with a scanning speed of one revolution/6 $\sim$ 8 sec.

c) Attitude-Controlled Rocket:

Thus far, the attitude control system (ACS) is based on the use of gyroscopes as sensing devices and the control is provided by gas jets. Gas jets cause the spin axis to point to a prescribed direction.

R. Giacconi and the group of physicists at American Science and Engineering, Inc. and B. Rossi and other physicists at M.I.T. will be referred as ASE or ASE-MIT group. H. Friedman's group at Naval Research Laboratory, P. Fisher's group at Lockheed and S. Hayakawa's group at Nagoya University will be referred to as NRL, Lockheed and Nagoya respectively.

It is then possible to keep the axis of a given detector pointing to a given direction within a degree or so or to make it sweep at a prescribed speed over a certain angular interval. This type of rocket was used by NRL group for the observations of the lunar occultation of the Crab Nebula and by Lockheed group to scan the galactic plane.

Several satellites have been used for the observation of cosmic γ-rays. Kraushaar and Clark (Kraushaar and Clark 1962, Kraushaar et. al. 1965) first used Explorer XI with a gamma- ray detector of effective area of about 45 cm^2. The Explorer may provide an observation time of the order of 3000 hours. Also, there are experiments planned on the OAO which may provide an observation time of about 3000 hours and with an effective detector area of about 1000 cm^2.

L. Peterson (1965) used the OSO-1 satellite to fly his 50-150 kev photon directional scintillation detector and a "Compton telescope" for the 0.3 $\sim$ 3 Mev range. Arnold et. al. (1962) measured photon fluxes with an isotropic counter on a boom on the Ranger III.

Also, balloons have been used for the observation of x-rays and gamma-rays. In order to distinguish the radiation of extraterrestial origin from the ambient background of secondary radiation in the atmosphere only highly directive radiation is looked for.

IV. Observational Methods: (2)

Detectors

a) G. M. counters and proportional counters

The G. M. counters which have been used for x-ray observations of the sky are sensitive to radiation in the range 1 $\sim$ 10 Å. The long wave-length limit is set by the window material and the short wavelength limit by the filling gas used.

Berylium windows of thickness $\frac{2}{1000}$ inches have been successfully used. This thickness corresponds to the absorption length of x-rays of 8 Å, and it is essentially transparent for x-rays of shorter wavelengths. Possibilities of using even thinner window of Aluminum or hydro-carbon are under study and it will soon become possible to extend the observable range to 20 Å or even 30 Å.

The efficiency of the counter starts to decrease for increasing energy of x-ray quantum when the gas of the counter becomes transparent. Argon gas of one atmospheric pressure and 5 cm deep begins to be semi-transparent at about $\lesssim 2$ Å. Using a heavier gas such as Xenon one can easily make the counter sensitive up to say 50 kev. An effective counter area of about 100 cm^2 is now very common. Proportional counters may be very useful for spectral observations. Pulse height distributions of a Xe-filled proportional counter for various monochromatic sources are shown in Fig. 5.

b) Scintillation Counters

Scintillation counters have been used for observation of both γ-rays and x-rays. The output pulse height is proportional to the energy of the x-ray quantum with fairly good accuracy. The average energy per photoelectron for a typical scintillation counter is 1000 ev whereas the average energy per ion pair produced in the proportional counter is the order of 30 ev. Thus, the scintillation counter may be suitable for comparatively higher energy regions of x-ray, say > 10 kev, where the proportional counter looses efficiency and resolution.

The Explorer XI experiment (Kraushaar and Clark) Kraushaar et. al. for detecting gamma-rays relied upon the directivity of the electron-positron pair produced by the gamma-ray in a CsI-NaI counter in combination with scintillation counters and a Cerenkov counter.

An arrangement of scintillation counters in coincidence called as "Compton telescope" (Peterson et. al.) was used for OSO-1 experiment.

c) Photoelectric Devices

A photoelectric detector is essentially made by a combination of a large photocathode and an electronmultiplier in such a way that photoelectrons ejected from the photocathode are led to the first dynode of the multiplier. The efficiency of the photoelectric effect at the solid surface for incident x-rays of 1 $\sim$ 10 Å is typically a fraction of percent. It increases to the order of a percent for grazing incidence. Also, there is evidence that for longer wavelengths (10 Å $\sim$ 30 Å) the efficiency is higher.

A group of Russian scientists discovered (1960) that some alkali halide, like CsI, SrF, have anomalously high efficiency for x-ray photons amounting to the order of 20% or more.

The ASE group made successful use of this detector on a rocket with a sensitive area of 40 cm^2 and sensitive wavelength up to 12 Å. The virtue of this detector is that it can be made sensitive to x-rays of long wavelength because a strong window is not necessary.

d) Spark Chambers

The virtue of this technique is the combination of its directionality (say, 1° for 1 Bev gamma ray) and its broad acceptance solid angle.

Thus, this fits the purpose of surveying discrete source of gamma rays. Because of its directivity it gains in signal to noise ratio for finding a discrete source against a high background over a sinple counter system. This enables Greisen and his Cornell group and K plan and the Rochester group to design experiments (Greisen et. al. 1965) for balloon borne detectors in spite of a high background of secondary origin at the balloon altitude.

Collimators:

a) In order to resolve x-ray sources and to obtain accurate information on the location and the angular sizes of sources, it is necessary to limit the field of view of the detectors. A collimator of a honeycomb type structure was used by the NRL group to provide approximately a circular field of view of 14° diameter. Cellular type collimators were used by ASE to get a typical field of view of 3° wide by 40° long.

b) The combination of high resolution and broad field of view was achieved by a "modulation collimator" developed by the ASE-MIT group.

The principle of this collimator is schematically shown in Fig. 6. Depending upon whether the angular size of the source is smaller or larger than $\frac{d}{D}$ radian, the collimator produce or does not produce the "modulation" of the flux while the orientation of the collimator with respect to the direction of the source changes. Thus, the size can be

estimated by the magnitude of the modulation. An example of observational results is shown together with expected curve (dashed line) for a size $\ll 0.5^{\circ}$.

A collimator of 7' resolving angle was used to determine the size of the SCO-X-1 source. It will be feasible to design a rocket-bourne collimator, of, say 1/4 arc minute resolution with a broad field of view.

With this collimator, one can also determine the location of a source on a group of lines projected on the celestial sphere according to the angular response of the collimator. It will be possible to limit the possible location on few lines.

Image Forming Telescopes

Image forming telescopes have been constructed and used for solar x-ray astronomy by ASE. This instrument consists of two reflecting surfaces which provide total reflection of x-rays under grazing incidence. This instrument may present an image of a source with an angular resolution of perhaps a few arc second when it is well pointed towards the source.

V. Observational Facts (x-rays)

The existence of extra solar x-ray was first discovered by Giacconi, Gursky, Paolini of ASE and Rossi of M.I.T. (1962) with a spinning rocket launched in June 1962. Geiger counters with a wide field of view were used and a strong source in the vicinity of the Galactic center, however,

off the center slightly, and a possible weaker source in the Cygrus constellation were detected. Also a diffuse backgrcund of probably celestial origin was observed. Two additional rocket experiments by the same group (Oct. 1962, June 1963) (Gursky et al 1963) with similar instrumentation confirmed the results and gave an indication of another source in the direction of the Crab Nebula. Friedman and the group at the Naval Research Laboratory (NRL), in the meantime, flew a collimated detector in April 1963 which scanned the general region of the Scorpio constellation with an angular resolution of 14°. (Bowyer et al 1964 a b). They detected a strong source which was definitely off the Galactic center since the flight was made while the Galactic center was below the horizon. This flight also revealed the source in Taurus which is about 1/10 as strong as the first source.

In July 1964, the NRL group (Bowyer et al 1964 c) succeeded in flying an attitude-controlled rocket at the moment when the moon occulted the center region of the Crab Nebula. This experiment clearly showed that the Taurus x-ray source was indeed the Crab Nebula and had a finite angular diameter of about 2 arc minutes.

In 1964, five rocket flights were carried out. ASE & MIT group (Giacconi et al, 1964 a, Oda et al 1964, Giacconi et al, 1965, Clark et al 1965) with two rapidly spinning rockets (Aug. 1964 and Oct. 1964) resolved the Scorpio x-ray source and a source region in the vicinity of the Galactic center which extends along the Galactic plane. Two discrete sources in this source region were identified and located.

The NRL group (Friedman 1965, Bowyer et al 1965) with a despun slowly spinning rocket launched in July 1964 and Nov. 1964, scanned most of the northern sky above declination -57° and observed the source region along the galactic disc extending for about 60° of galactic longitude in Serpens, Sagittarius and Scorpio, two sources in Cygius and the Crab Nebula. The source region was concluded to be composed of probably several sources whose locations and intensities were tentatively given.

Fischer et al (1965) scanned along the galactic plane from $l_{II} \approx 320^{\circ}$ to $l_{II} \approx 160^{\circ}$ and determined the galactic longitude of several sources.

Clark of M.I.T. succeeded in 1964 (Clark 1965) in detecting x-rays from the Crab Nebula with a balloon-borne instrument in the energy region > 15 kev.

Fig. 7 shows the part of the sky which has been scanned by the NRL survey of July and November 1964. Regions of the sky studies by ASE-MIT are also indicated.

Locations of sources discovered so far are summarized in Fig. 7 and 8. The strongest source in Scorpio (SCO-X-1) was observed and located by the ASE-MIT, NRL and Lockheed groups. Intensities of the SCO-X-1 estimated by these groups are in reasonably good agreement. Typical figures may be listed as follows after Giacconi, Gursky and Waters (1965).

Energy Range	Counting Rate* Counts/cm^2 sec	Integrated Power** ergs/cm^2 sec	Integrated Flux Photons/cm^2 sec***
1 ~ 10 kev	16.8 ± 0.6	(1.6 ± 0.4) . 10^{-7}	32 ± 6
8 kev	1.2 ± 0.3	(3.3 ± 0.8) . 10^{-8}	1.8 ± 0.4

* Counts for 1 ~ 10 kev obtained with Argon-filled GM counter with a Be-window of 9.0 mg/cm^2 thickness. Counts for > 8 kev were obtained with the NaI counter.

** Integrated over the energy range.

*** Considering the spectral response of the counter and based upon the assumed energy spectrum of ν^{-1}.

The upper limit of the intensity of discrete sources which might have escaped the observation is about 1/20 or 1/30 of the intensity of SCO-X-1 source for most of the indicated region of the sky.

Fig. 8 summarizes the observations by ASE-MIT, NRL and Lockheed groups. The existence of the complex source region near the Galactic center is agreed on by ASE-MIT, NRL and Lockheed, though details are somewhat contradictory. Results of ASE-MIT observations are summarized as follows:

1) The location of the source in Scorpio (SCO-X-1) is either one of the following two locations:

16 h 12m		16 h 19m
-15.6°	or	-14.0°

The error in this location is about $\pm 1/2^\circ$.

2) The source region between $l_{II} = 340^\circ$ and $l_{II} = 15^\circ$ is limited in a narrow box of the width 6° as indicated. This box is slightly off the galacticplane and the Galactic center, therefore, Sagittarius A is not likely to be a strong x-ray source, though the possibility of Sag. A being in this box cannot be completely ruled out.

3) The integral intensity of this box region is about 1/2.5 of SCO-X-1.

4) The region may be composed of several discrete sources, though a possibility of a diffuse background cannot be ruled out. The intensity of the composite discrete sources cannot be larger than 1/12 of SCO-X-1. At least two discrete sources in this box are clearly located.

5) The remnant of 1604 SN (Kepler SN), is <u>not</u> a source or at least its intensity is less than 1/30 of SCO-X-1.

6) There is an indication of a weak source in a narrow region below the galactic plane as indicated.

The NRL group concluded that at least several discrete sources are resolved in the source region which extends from $l_{II} = 340^{\circ}$ to $l_{II} = 20^{\circ}$ and that configuration of the region can be best explained by a group of possible sources indicated in the Figures 7, 8, 9. The intensities assigned for the sources in the unit of the intensity of SCO-X-1 are indicated in Fig. 8. The intensity of the Crab Nebula is concluded to about 1/7 of that of SCO-X-1 in the same wavelength range. Two sources were located in the constellation Cygnus but neither of these coincide with the Cygnus loop or Cygnus A.

The Lockheed group resolved six sources by scanning along the galactic plane as shown in Fig. 8, 9. This group concluded the location of SCO-X-1, as $16^{h}\ 14^{m}$, $-15^{\circ}\ 36'$ with an accuracy of 15 arc minutes. One of the two Cygnus scources located by NRL was confirmed.

As described before, x-rays from Taurus were observed by the NRL group while the Moon occulted the Crab Nebula and clearly were shown to come from a region of angular diameter of 2' near the center of the Crab Nebula. This is the only x-ray source, thus far, which has been identified with any astronomical object observed with radio or optical means.

In summary, one may conclude as follows:

1) There is an x-ray source in the Crab Nebula that is a typical supernova remnant.

2) There are at least seven or eight discrete sources which are located within 5° of the galactic plane but with a scattering of about 3°. They show a loose clustering towards the galactic center.

3) SCO-X-1 is an exception being more than about ten times stronger than any other sources and located at somewhat high galactic latitude (25°) though its direction is still in the general direction of the Galactic center.

4) There is no evidence for the identification of x-ray sources with any astronomical objects which are observable with radio or visible light except for the x-ray source in the Crab Nebula.

5) Angular sizes of discrete sources are small. Most of the sources in the complex region near the galactic center are smaller than 30'. The source SCO-X-1 is smaller than 7'.

6) None of the following objects show the evidence of x-ray emission of intensity larger than 1/20 of SCO-X-1; Orion complex; Cyg. A., Quasars, SN remnants except the Crab Nebula (SN1054).

7) It has been agreed that there may be a diffuse, probably isotropic background. This will be discussed later in more detail.

The information on the spectra of x-ray sources is still very meagre. So far, the information is available only for the spectral region of $1 \sim 40$ kev with very limited accuracy. A tentative spectrum for the SCO-X-1 is synthesized in Fig. 10 from various pieces of results. Giacconi et al (1965) concluded the following parameters respectively for assumed spectral functions in $1 \sim 10$ kev range from the comparison of counting rates of GM counters with no filter and filters of different thicknesses:

a) power law ; $\alpha = 1.1 \pm 0.3$

b) exponential law ; $T = (3.8 \pm 1.8) . 10^{7o}K$

c) Planck's law : $T = (9.1 \pm 0.9) .10^{6o}K$

A power law is typical for synchrotron radiation and inverse Compton effect. An exponential law is the characteristic spectrum of radiation by free-free transiion in a hot and optically thin ion cloud of temperature T.

The spectrum beyond 10 kev obtained by the pulse hight analysis of scintillation counters and proportional counters seems to rule out the Planck-law-type spectra. Further discussions on the shape of the spectrum must be reserved until more data are available.

There is an indication suggested by ASE and also by NRL (Friedman 1965) that the spectrum of the source region near the galactic center may be harder than that of SCO-X-1.

The importance of the spectra in the longer wavelength region has to be emphasized. Depending upon the distance to the source, the spectra should show a cutoff at different wavelengths, typically from 15 Å to 30 Å would be absorbed and the Crab Nebula may show a cutoff around 20~30 Å.

VI. Generation Mechanisms of X-Rays

It should be emphasized that intensities of the discrete sources ($10^{-8} \sim 10^{-7}$ ergs/cm^{2}sec) are very high. So, they must be astronomical object in which a very efficient generation mechanism of x-rays is at work but at the same time, they do not emit substantial radio and optical radiation except in the case of the source in the Crab Nebula. Various

physical processes have been discussed. (See Fig. 1 and review articles of theories)

1) Synchrotron radiation of electrons in the 10^{14} ev range in a magnetic field of $10^{-3} \sim 10^{-4}$ gauss provides the radiation in the x-ray band. However, since electrons in this circumstance lose their energies very rapidly (within a year), some mechanism of injecting electrons with this energy very quickly must exist in the source.

2) The bremsstrahlung of an electron of energy of about 10 kev in an impact with a proton (and probably an electron) gives radiation in the x-ray band. Rossi (1964) pointed out that the configuration of cold plasma in which non-thermal electrons generate x-rays by bremsstrahlung is unlikely to be a strong x-ray source and suggested a "hot" plasma as a possible source. In a plasma of temperature $10^7 \sim 10^8$ °K, thermal energies of electrons is the order of 10 kev and the bremsstrahlung of thermal electrons (free-free transition) is in the x-ray band. If this is the case, the question is then how the plasma is heated to this temperature and kept confined for a long period. If we consider the free-bound radition in the plasma in addition to the free-free radiation, the necessary temperature can be reduced by some factor. (Hayakawa et al 1965 d).

We may calculate various physical parameters of the source for assumed physical processes and see if they are reasonable. As an example, in table I the electron density, the energy density, the total energy and the maximum total mass of the source are calculated in order to explain the SCO-X-1 for assumed distances to the source and size of the source for typical processes.

For example, if the source were a supernova remnant, the total energy is smaller than 10^{62} ev. and the mass is smaller than 5 solar masses. Then, for this table we argue that, if the Compton effect is the process, the source must be nearby, and the hot plasma is energetically possible as a source at a distance of kilo par sec.

VII X-Ray Sources and Supernova

One of the x-ray sources was clearly identified with the Crab Nebula which is a remnant of 1054 supernova (SN) by the NRL group (Bowyer et al 1964 c). No positive evidence of x-ray sources has been found for other SN remnants such as Cass A, Kepler SN, Tycho SN or Cygnus loop. This may not be too surprising, however, if we take into account the fact that 1054 SN may be the nearest supernova which has been identified.

The Crab Nebula radiates an x-ray flux of about 10^{-8} erg/cm^2 sec in the 2~8 Å band from its central region of about 2 arc minutes diameter. Considering the distance to the Crab Nebula, we get 2.10^{35} ergs/sec as the x-ray energy ejected. Fig. 11 is a summarized spectrum of electromagnetic radiation from the Crab Nebula. It is well known that the spectrum up to the optical region can be explained by means of the synchrotron radiation of energetic electrons. From various physical considerations of the structure of the Crab Nebula, it has been maintained that the energy of existing electrons may not exceed much beyond 10^{12} ev and spectrum of the electromagnetic radiation may have a cutoff not far beyond the optical region. On the contrary, the spectrum seems to extend quite far. It would be crucial to know if this is the continua-

tion of the spectrum from the optical region or this x-ray band has different physical origin.

Various physical processes have been considered to explain this x-ray band of the spectrum.

Synchrotron radiation of energetic electrons of the band 10^{14} ev. in a magnetic field of $10^{-3} \sim 10^{-4}$ gauss provides the x-rays. However, if the synchrotron radiation is the mechanism for x-ray generation, as discussed previously , there must be some rapid process (< 1 year) by which 10^{14} ev electrons are continuously produced in the Crab Nebula.

It may be easily seen from table I that the free-free emission of the "hot" plasma cloud of temperature $10^{7} \sim 10^{8}$ °K is possibly the source in the Crab Nebula though the argument is tight. It was pointed out that, if we assume the relative abundance of elements, the free-bound transition can be calculated and it is likely to be as important as the free-free transition.

Hayakawa, Matsuoka, and Yamashita (1965) assumed a similiarity between the hot ionize cloud in the Crab Nebula and hot condensations in the solar corona which were considered as the origin of enhanced solar x-rays and applied the results of the calculation done by Kawabata and Elwert to the problem of the Crab Nebula. They showed that assuming the chemical composition of the hot cloud to be similar to the composition of cosmic rays, the temperature of the plasma can be reduced somewhat.

The question of how the energy was pumpted into a hot plasma could is another matter. Gould and Burbidge (1965) showed that the gas

motions of the Crab Nebula is not able to keep the temperature as high as 10^8 °K for a period to be compatible with the observation. Morrison and Sartori (1965) proposed a model for the history of the supernova remnant. This model describes the source as a hot, optically thin gas cloud with very rich abundance of high-Z elements. The high - Z elements are considered to be formed by the r-process (rapid-process) in the explosion. Radio-active elements formed in r-process decay through fission and the fission fragments may keep supplying the radioactive energy for an extended period of time, which is enough to heat the gas cloud up to the temperature of 10^8 °K. The process of this radioactive heating is basically similar to the "Cf-hypothesis of SN remnant" (Burbidge et al 1957) but as a nucleus of longer lived C_m^{250}, for example, is considered here. This model provides a long-lasting x-ray source which is compatible with the idea of all x-ray sources being SN-remnants, though the model may be questioned because of its generous assumption on the relative abundance of high-Z elements.

The group at Rice University (Clayton and Craddok 1965) estimated fluxes of x-rays or gamma-rays emitted as line spectra based upon the Cf-hypothesis of SN. The lines distribute between 30 kev and 2 Mev and the flux of strongest line (390 kev from Cf^{249}) is estimated to be about 10^{-4} photons/cm^2 sec. Experiments to detect the lines are proposed.

Neutron stars were proposed as an attractive possibility of explaining the x-ray emission from the sources, immediately (Chiu 1964; see review articles on theories) after the SCO-X-1 and the source in the Crab Nebula were discovered. The neutron star is the hypothetical final state

of stellar evolution left after the SN explosition. It is supposed that the density of this star is extremely high (10^{15} g/cm^3) and it is composed of neutrons which are in a degenerate state. After formation of the neutron star, because of enormous gravitational energy released to the heat, it remains extremely hot (typically 10^7°K) for some time* (say 1000 yrs) and it emits the blackbody radiation which is in the x-ray band at this temperature. It was shown that a neutron star at typical distance may be a detectable x-ray source. However, the size of the source determined by the NRL group and the spectrum > 10 kev region by Clark made the neutron star hard to be the direct mechanism of x-ray source in the Crab Nebula. Theoretical studies of the neutron star have been continued and its various possible relations to the x-ray source are discussed (Cameron 1965).

A question may naturally arise. Are all discrete source supernova remnants? Recall the fact that the majority of the sources in the galactic plane cluster within approximately 20° of l_{II}. This indicates that the sources are mainly located in the vicinity of the galactic center, within say 1 kpc, and, hence, the distance to these sources from us is typically 8 kpc. Then, if all x-ray sources are supernova remnents, we are lead to the following arguments by statistical considerations:

1) Since the distances are the same order of magnitude, the sources

---

* The life of a neutron star is quite uncertain because of obscurity in the cooling process in this hot and highly compressed matter. (See Tsurutz and Cameron 1965).

which are even more than 20 times stronger than the Crab Nebula have to be explained.

2) Not all of supernovae leaves strong x-ray remnants. That is, only limited cases of supernovae leaves strong x-ray emitting remnants. Thus, in order to explain the number of observed x-ray sources, we must admit numerous supernovae in the vicinity of the galactic center. In order that this number of supernovae is compatible with the generally accepted occurrence frequency of supernovae in the galaxy, we must assume very long life for the "x-ray remnant", such as $> 10^4$ yrs.

3) Most of supernovae must cluster in the vicinity of the galactic center. This is not likely the case because known remnants or suspected radio and optical remnants do not show this tendency at all.

Thus, in any case, the hypothesis that all x-ray sources are supernova remnants stress peculiar features of the supernova remnant and the x-ray source.

VIII SCO-X-1 Source

The fact that the SCO-X-1 is the strongest source and is located at comparatively high galactic latitude ($+25^{\circ}$) may suggest that it belongs to physically the same kind of object as the other sources only being located nearby. However, if it is similar to the source in the Crab Nebula, it must be very close (like 500 pc) and the following question has to be answered: why such a near remnant cannot be recognized by radio or optical observation?*

---

* There is a small diffuse object seen in the error circle on the Palomar Observatory Sky Survey. Also the radio astronomy group of Bologna indicated a radio source in the circle. But there is no evidence that they are peculiar.

It is not likely that the SCO-X-1 is similar in kind to the sources in the vicinity of the galactic center. Thus, the question of what is SCO-X-1 is entirely unsolved. It is extremely important to improve the accuracy of its location so that more thorough search for radio and optical objects is possible.

Suppose that the physical process in the SCO-X-1 source is either synchrotron radiation or free-free transition by a "hot" dilute gas regardless which astronomical object it is. Then, the energy flux in the optical band is most likely larger than that of x-ray band; i.e., 10^{-10} erg/cm^2 sec. This optical flux corresponds to magnitude 12 and under more reasonable condition it should be brighter. Therefore, unless it is a diffuse source of larger angular size than two arc minutes so that the surface brightness is diluted down to 22 or 23rd magnitude per square arc seconds or it is smaller than a few arc seconds, it should be clearly distinguished from stars in the field as a bright and diffuse source. Since we know that the size of the source is smaller than 7 arc minutes, the angular size of the source must be in a limited range (2~7') or it must be so small that it cannot be distinguished from a star.

Regarding the location of the SCO-X-1, the following features may be worth keeping in mind. 1) Although it is located at a relatively high galactic latitude, it is approximately on "$l_{II} = 0$" line in the galactic coordinate. This is the source of a suggestion (Morrison) that the SCO-X-1 may be a phenomenon of galactic scale and located on the galactic axis in the halo. 2) SCO-X-1 is in the general region of the

complex composed of O-B stars association and interstellar clouds which extend in Scorpio and Sagittarius constellation at a distance of 700 pc. 3) Relative locations of the "north polar radio spur" to the SCO-X-1 suggests the possible relation between the two. This geometric relation is consistent with the following picture. We may assume SN exploded nearby and that its expending relativistic gas cloud compressing the interstellar medium, form a well defined boundary which is recognized as the Radio Spur. And, the x-ray-source was left in the middle of the cloud as in the case of the Crab Nebula. Difference of this picture from the case of the Crab Nebula is that the relativistic gas cloud is emphasized here and the Crab Nebula-type remnant somehow has not developed to be visible optically. Consideration on the possible age of this "SN" and the expansion speed of the boundary leads to an estimate of the distance as, say, 100 ~ 1000 l.y.

IX X-Ray Intensity of Our Galaxy

If we admit the clustering of sources towards the galactic center, it can be shown that the sources near the galactic center bear the most of the radiative power of the galaxy provided that contribution of the isotropic component of galactic origin is minor. Therefore, the absolute intensity of the galaxy is, as the order of magnitude, 10 quanta/cm^2 sec 1 ~ 10 kev range) $\times 4\pi \times R_{GC}^2 \approx 10^{47}$ quanta/sec . 1 ~ 10 kev range . galaxy) where R_{GC} is the distance to the galactic center.

If the Andromeda nebula is similar to our galaxy, its x-ray intensity is predicted to be about $\frac{1}{500}$ quanta/cm^2 sec. If our galaxy is an average

galaxy, the Virgo cluster which is composed of 3000 galaxies at a distane of 7000 kpc may have the intensity of about 0.1 quanta/cm^2 sec.

X. Background Component of Celestial X-rays and Extragalactic X-ray Sources

Since the earliest observation of ASE the existence of the isotropic x-ray background has been indicated. Information on the background flux is summarized in Fig. 12. The ratio, η, of the counting rate of the isotropic component to the peak counting rate of the SCO-X-1 source for various experiments are presented for the field of view Ω of respective measurements. This ratio is insensitive to the experimental conditions provided the spectra of SCO-X-1 and the background are essentially similar. The ratio is: $\phi_B \cdot \Omega / \phi_{SCO}$ where ϕ_B is the background flux for unit solid angle and ϕ_{SCO} is the flux density of the SCO-X-1 that is, say 17 counts/cm^2 sec in 2 $\sim$ 8 Å band. Results of ASE show that η is roughly proportional to Ω as is expected if the background is truly x-rays coming from outside, except for one result which is suspected to be in error because of a partial failure of the veto-counter which rejected cosmic ray particles. All other data were obtained without the veto-counter and, hence, it is understandable that they show slightly higher background fluxes. An estimate of the flux by NRL is based on the difference of the counts when the counter was looking upwards and downwards indicated as the lower limit of NRL values of η is consistent with ASE. Thus, the background component which is proportional to the field of view of the detector is estimated as about 6 count/(cm^2 sec ster) for 2$\sim$ 8 Å band. If we consider the spectral response of the detector and the energy spectrum, the flux may be as much as 10 quanta/(cm^2 sec ster.)

There is no evidence for anisotropy for any specific direction of Galactic coordinate: e.g. say the direction of the Milky Way. Also there is no positive indication to show a bright atmospheric horizon or any preferential local azimuth. All information indicates that the background flux from outside truly exists though it is not absolutely certain that the flux comes from outside of the Van Allen belt. If it is extraterrestial, it is likely extragalactic. If it is extragalactic, we may expect a dip along the galactic disc in say, the 10~20 Å band provided the interstellar absorption of extragalactic flux is more than the contribution of a number of weak sources which may possibly exist in the plane.

There are two typical ways of explaining the extragalactic component. One is to attribute it to the superposition of galactic x-rays (Gould and Burbidge 1965). The other is to consider the generation of x-rays in the intergalactic space.* The inverse-Compton effect of intergalactic photons with intergalactic electrons has been considered.

Suppose the background flux is a superposition of x-rays from galaxies in the universe up to the Hubble distance, R_H. The background flux, I, per unit solid angle is expressed by

$$I = n_g \frac{P_g}{4\pi} R_H$$

where n_g is the density of galaxy and p_g is the emissivity of the average galaxy. If our galaxy is one of the average galaxies and the x-ray sources are localized near the center of the galaxy, the intensity of the source near the Galactic center would have to be $f = P_g / 4\pi R_{GC}^2$ where R_G is the distance to the Galactic center. Thus: $f = I / n_g \cdot R_{GC}^2 \cdot R_H$

* The x-ray background may have an important bearing in cosmology, but we will not come into these problems here. See Gould and Burbidge 1965, Sciama 1965 for example.

There is no evidence for anisotropy for any specific direction of Galactic coordinate: e.g. say the direction of the Milky Way. Also there is no positive indication to show a bright atmospheric horizon or any preferential local azimuth. All information indicates that the background flux from outside truly exists though it is not absolutely certain that the flux comes from outside of the Van Allen belt. If it is extraterrestial, it is likely extragalactic. If it is extragalactic, we may expect a dip along the galactic disc in say, the 10~20 Å band provided the interstellar absorption of extragalactic flux is more than the contribution of a number of weak sources which may possibly exist in the plane.

There are two typical ways of explaining the extragalactic component. One is to attribute it to the superposition of galactic x-rays (Gould and Burbidge 1965). The other is to consider the generation of x-rays in the intergalactic space.* The inverse-Compton effect of intergalactic photons with intergalactic electrons has been considered.

Suppose the background flux is a superposition of x-rays from galaxies in the universe up to the Hubble distance, R_H. The background flux, I, per unit solid angle is expressed by

$$I = n_g \frac{P_g}{4\pi} R_H$$

where n_g is the density of galaxy and p_g is the emissivity of the average galaxy. If our galaxy is one of the average galaxies and the x-ray sources are localized near the center of the galaxy, the intensity of the source near the Galactic center would have to be $f = P_g / 4\pi R_{GC}^2$ where R_G is the distance to the Galactic center. Thus: $f = I / n_g \cdot R_{GC}^2 \cdot R_H$

* The x-ray background may have an important bearing in cosmology, but we will not come into these problems here. See Gould and Burbidge 1965, Sciama 1965 for example.

Putting figures in the formula

($n_g = 3.10^{-11}/kpc^3$, $R_H \approx 3.10^6 kpc$, $R_{GC} \approx 10$ kpc

and $I \approx 10$ quanta/cm^2 sec ster per 2 ~ 8 Å) we get $f \approx 700$ quanta/cm^2 sec for 2 ~ 8 Å. This is about 100 times greater than the observed intensity. That is, the superposition of the galaxies explains only one percent of the observed isotropic flux.

If out galaxy is not typical and the emissivity of the average galaxy is 100 times of our galaxy, the isotropic component can be explained by the superposition. If so, it can be shown that the Virgo cluster would provide the intensity of about 2/cm^2 sec which may be observable.

If, on the average, one out of m galaxies has the x-ray emissivity 100 m times of our galaxy, the superposition of x-ray flux from these galaxies also explains the background. In this case, the typical distance to the nearest galaxy of this kind and its x-ray intensity can be figured out as approximately $2m^{1/3}$ (MPC) and 3.10^{-2} $(m)^{1/3}$ counts/cm^2 sec per 2 8 Å respectively. If m is typically 100, the expected intensity is 0.1/cm^2 sec. This figure indicates that by improving the sensitivity of detection technics by a factor of 10, we may resolve the background to the composit extragalactic source if this model is true. The background component of intergalactic origin will be discussed later.

XI Cosmic X-rays - γ-rays

Observations are summarized in Table II. In Fig. 13, results of observations on discrete sources are summarized. No positive evidence for any astronomical objects being x-ray or gamma-ray source except those x-ray sources which were discussed before has been found.

Consider a radio source where the radio emission is caused by the synchrotron radiation of energetic electrons in a magnetic field and assume that the electrons are produced by the decay of pions and not post-accelerated. Because approximately the same amount of energy goes to charged pions and neutral pions which decay into gamma-rays, energy fluxes of synchrotron radiation in a certain frequency range and gamma-rays of a corresponding energy, which is a function of the magnetic field, are approximately equal. Thus, the expected energy spectrum of gamma-rays can be derived from the spectrum of synchrotron radiation if the magnetic field is given.

From the Crab Nebula the spectrum of synchrotron radiation is known for a wide frequency range, from radio to optical region. For assumed magnetic field (10^{-4} gauss) the energy spectrum of gamma-rays is thus derived as indicated in the figure. As another example, the spectrum is estimated for Virgo A. The spectrum of synchrotron radiation in this case is not known beyond radio region. So the calculation was made for various assumed frequency limit to which a power law spectrum holds.

Although experimental results only show the upper limits for various suspected sources, it is seen that these upper limits are already physically meaningful and further improvement of experiments will be very important.

Experiments by Chudakov et al. (1962) and Fruin et al. (1964) seem to show the electrons in the Crab Nebula are not simple decay products of pions and are probably post-accelerated if the synchrotron spectrum of the Crab Nebula extends beyond optical region as shown in Fig. 11.

In Fig. 14, observational results on the isotropic component are summarized. ASE, Nagoya and Arnold et al. indicate that the obtained fluxes are real though it is not absolutely certain that they are extraterrestial. There are some indications that Kraushaar and Clark's upper limit may be real also.

The isotropic component may be produced in our galaxy or more likely outside of our galaxy. The estimated gamma-ray energy spectrum for π^0-decay in our galaxy is indicated in the figure after Garmire and Kraushaar. Fazio, Stecker and Wright (1965) showed that, if the 3.5° black body radiation field of Penzias-Wilson (1965) is correct a substantial contribution is expected by inverse Compton scattering of photons of this universal radiation field by galactic electrons.

As for the isotropic component of extragalactic origin, one may consider two origins. One is the superposition of unresolved galaxies. As in the case for 1 10 kev range, the superposition of galaxies may not explain the observed isotropic flux of gamma-ray range if our galaxy is "typical". If sources in our galaxy distribut uniformly in a sphere or a plane and our galaxy is "typical", it can be shown that the contribution from our galaxy predominate the superposition of galaxies up to the Hubble distance. Thus, the superposition is not likely to be the explanation.

Another possible place for generation of the isotropic component is in intergalactic space. One possibility is the inverse-Compton effect

in intergalactic space. If we assume that the electron spectrum in intergalactic space is similar to what Hayakawa et al. (1964)assumed for galactic electrons* and use the star light photon density worked out by Garmire, we get an expected spectrum as shown in the figure. If the electron spectrum should keep a constant power to lower energy as indicated by Cline's experiment, we expect the spectrum indicated by a dashed line. Of course, this assumption of similarity of electron density in the Galaxy and in the intergalactic space is made only for the convenience of discussion. We expect even several orders of magnitude higher flux of inverse-Compton x-rays and γ-rays than actually is observed, if we take this electron spectrum and the Penzias-Wilson's field in intergalactic space.

Gamma-rays of higher energy may be produced by the decay of neutral pions produced by the collision of intergalactic cosmic rays and intergalactic gas. Also, they may be produced by the bremsstrahlund of intergalactic electrons. Estimated spectra for these processes are shown in Fig. 15 after Garmire and Kraushaar. The uncertain nature of various estimates of the isotropic component must be emphasized.

---

* The galactic electron spectrum is not well known, Direct measurements by Earl (1961), Meyer and Vogt (1961), L'Heureux and Meyer, (1965), and Agrinier et al. (1964) are in reasonable agreements with theoretical estimate of the spectrum from the radio noise done by Hayakawa et al. Measurement by Cline et al. (1964) provides information for low energy range which is in disagreement with the above.

XII Conclusion

In conclusion, I wish to emphasize the fact that obtained results in this new branch of astronomy in the past few years have already revealed quite unexpected features of the universe and there is no doubt that this will continue to be a strong tool to explore the universe.

The author would like to thank Prof. Garmire with whom he worked out most of this article. Also the author owes to those who helped him by sending information and by discussions specifically to Prof. Greisen and Prof. Hayakawa who informed the author of unpublished results and to Prof. Morrison for critical discussions.

For the most part, this article has its origin in discussions with Prof. Rossi and Prof. Clark of M.I.T. and Dr. Giacconi and Dr. Gursky of A.S.E.

-REFERENCES-

Agrinier, B., Boella, G., Degli Antoni, G., Dilworth, C., Koechin, Y., Parlier, B., Scarsi, L. and Sironi, G.; 1964 Phys. Rev. Letters 13, 377.

Arnold, J.R., Metzger, A.E., Anderson, E.C. and Van Dilla, M.A.: 1962 J.G.R. 67, 4878.

Bowyer, S., Byram, E.T., Chubb, T.A., and Friedman, H.: 1964a Space Research 4, 966.

Bowyer, S., Byram, E.T., Chubb, T.A. and Friedman, H.: 1964b Nature 201, 1307.

Bowyer, S., Byram, E.T., Chubb, T.A., and Friedman, H.: 1964c Science 146, 912.

Bowyer, S., Byram, E.T., Chubb, T.A. and Friedman, H.: 1965 Science 147, 394.

Burbidge, G.R., Gould, R.J. and Tucker, W.H.; 1965 Phys. Rev. Letters 14, 289.

Cameron, A.G.W.; 1965 Nature 205, 878.

Chiu, H.Y. and Saltpeter, E.E.; 1964 Phys. Rev. Letters 12, 412.

Chiu, H.Y.: 1964 Ann. of Phys. 26,364.

Chudakov, A.E., Dadykin, V.L., Zacepin, V.I. and Nesterova, N.M.: 1962 J. Phys. Soc. Japan 17, Supple. A III, 106 and 1962 Proc. Fifth Interamerican Seminar of Cosmic Rays, La Paz, Bolivia.

Clark, G.W., Garmire, G., Oda, M., Wada, M., Giacconi, R., Gursky, H. and Waters, J.: 1965 Nature 207, 584.

Clark, G.W. 1965 Phys. Rev. Letters, 14, 91.

Clayton, D.D. and Craddock, W.L.: 1965 Ap. J. 142, 189.

Cline, T.L., Ludwig, G.H. and McDonald, F.B.; 1964 Phys. Rev. Letters 13, 786.

Duthie, J.G., Happner, E.M., Kaplan, M.F. and Fazio, G.G.: 1963 Phys. Rev. Letters 10, 364.

Fazio, G.G., Stecker, F.W. and Wright, J.P.: 1965 Phys. Rev. Letters submitted.

Felton, J.E. and Morrison, P.: 1963 Phys. Rev. Letters 10, 453.

Fisher, P.C., Johnson, H.M., Jordan, W.C., Meyerott, A.J., and Acton, L.W.: 1965 COSPAR Symposium, Buenos Aires.

Friedman, H.: 1965 in press

Fruin, J.H., Jelley, J.V., Long, C.O., Porter, N.A. and Weekes, T.C.: 1964 Physics Letters 10, 176.

Frye, G.M. and Smith, L.H.: 1965 Bull. Am. Phys. Soc. 10, 705.

Garmire, G. and Kraushaar, W.: 1965 Space Science Reviews.

Giacconi, R. and Rossi, B.: 1960 J.G.R. 65, 773.

Giacconi, R., Gursky, H., Paolini, F. and Rossi, B.: 1962 Phys. Rev. Letters 9, 439.

Giacconi, R., Gursky, H., Waters, J.R., Clark, G.W. and Rossi, B.; 1964 Nature 204, 981.

Giacconi, R. and Gursky, H.: 1965 Space Science Review.

Giacconi, R., Gursky, H. and Waters, J.R.: 1965 Nature 207, 572.

Ginzburg, V.L. and Syrovatskii, S.I.: 1965 USPEKHI

Goldreich, P. and Morrison, P.: JETP 18, 239.

Gould, R.J. and Burbidge, G.R.: 1965 Annales D'Astrophysiciques 28
1965 Handbuch der Physik (in press)

Greisen, K., Ogelman, H., Delvaille, J.: Private communication.

Gursky, H., Giacconi, R., Paolini, F. and Rossi, B.: 1963 Phys. Rev. Letters 11, 530.

Hayakawa, S., Okuda, H., Tanaka, Y., and Yamamoto, Y.: 1965a Progr. Theor. Phys. Suppl. No. 30.

Hayakawa, S. and Matsuoka, M.: 1965 b Progr. Theor. Phys. Suppl. No. 30

Hayakawa, S., Matsuoka, M., and Sugimoto, D.: 1965 c Space Science Rev. (in press).

Hayakawa, S., Matsuoka, M. and Yamashita, : 1965 d COSPAR Symposium Buenos Aires.

Hicks, D.B., Rind, L.Jr. and Peterson, L.E.: 1965 IEEE Transact. on Nucl. Sci. Vol. NS-12, 54.

Kraushaar, W. and Clark, G.W.: 1962 Phys. Rev. Letters 8, 106.

Kraushaar, W., Clark, G.W., Agogino, M., Garmire, G., Helmken, H. and P. Higbie

L'Heureux, J. and Meyer, P.: 1965 Phys. Rev. Letters. 15, 93.

Mayer, P. and Vogt, R.: 1961 Phys. Rev. Letters 6, 193.

Morrison, P.: 1958, Nuovo Cimento 1, 858.

Morrison, P. and Sartori, L.; 1965 Phys. Rev. Letters 14, 771.

Morton, D.C.; 1964 Nature 201, 1308.

Oda, M., Clark, G.W., Garmire, G., Wada, M., Giacconi, R., Gursky, H. and Waters, J.: 1965 Nature 205, 554.

Oda, M.: 1965 Applied Optics Jan.

Penzias, A.A. and Wilson, R.W.: 1965 Ap. J. 142, 419.

Peterson, L.E.: 1965 COSPAR Symposium, Buenos Aires.

Rossi, B.; 1964 COSPAR Symposium, Florence
1964 Solvay Conference

Sciama, D.W.; 1964 COSPAR Symposium, Florence. 1965 Ap. J.

Tsuruta, S. and Cameron, A.G.U.; 1965 Nature 207, 364.

Woltjer, L.; 1964 Ap J. 140, 1309.

ii

iii

TABLE I

Calculated physical parameters of SCO X-1 for various assumed processes and distances.

R (distance l.y.)	30	300	3000	3.10^4	
i) Synchrotron radiation (B_1 is assumed to be $1.5 \cdot 10^{-3}$ gauss)					
$N_e(10^{13}$ e.v.)/c.c. (electron density)	$2.10^{-13}/d^3$	$2.10^{-11}/d^3$	$2.10^{-9}/d^3$	R^2/d^3
$N_e \cdot E_e$ e.v./c.c. (energy density)	$2/d^3$	$200/d^3$	$2.10^4/d^3$	$R^2/d3$
N_eE_eV e.v. (total energy)	10^{54}	10^{56}	10^{58}	R^2
ii) Compton effect (starlight density is assumed to be 1 e.v./c.c.)				
$N_e(3.10^7$ e.v.)/c.c.	$60/d^3$	$6000/d^3$	$6.10^5/^3$	$6.10^7/d^3$	$R^2/^3$
N_eE_e e.v./c.c.	$10^9/d^3$	$10^{11}/d^3$	$10^{13}/d^3$	$10^{15}/d^3$	R^2/d^3
N_eE_eV e.v.	6.10^{62}	6.10^{64}	6.10^{66}	6.10^{68}	R^2
$M/M_\odot$	>0.05	>5	>500	$>5.10^4$	R^2
iii) Hot Plasma ($T \sim 10^{7\circ}K$)					
$N_e \approx N_i$/c.c.	$40/d^{3/2}$	$400/d^{3/2}$	$4000/d^{3/2}$	$4.10^4/d^{3/2}$	$R/d^{3/2}$
N_eE_e e.v./c.c.	$4.10^8/d^{3/2}$	$4.10^9/d^{3/2}$	$4.10^{10}/d^{3/2}$	$4.10^{11}/d^{3/2}$	$R/d^{3/2}$
N_eE_eV e.v.	$5.10^{58}d^{3/2}$	$5.10^{59}d^{3/2}$	$5.10^{60}d^{3/2}$	$5.10^{61}d^{3/2}$	$R/d^{3/2}$
$M/M_\odot$	$0.03.d^{3/2}$	$0.3d^{3/2}$	$3.d^{3/2}$	$30\ d^{3/2}$	$R/d^{3/2}$

Flux density $\equiv F = \frac{V}{4\pi R^2} \cdot P \approx 10^{-7}$ erg/cm^{2}sec. $1 \sim 10$ kev

Volume $\equiv V = \frac{\pi}{6} d^3$ d = diameter of source in l.y.

TABLE II

Observer	Vehicle	Detecter	Energy	Observation
1) Hayakawa et al (1965)	rocket (Lambda)	Scinti.	5 ~ 20 kev	isotropic
2) Clark	balloon	"	15 ~ 60 kev	Tau A
3)				Cyg.
4)				SCO-X
5) Arnold et al	Ranger III	Scinti. on boom	50 kev ~ 1 Mev	isotropic (Upper limit)
6) Peterson	OSO-1	Compton Telescope	0.5 ~ 5 Mev	Upper Limit of isotropic
7) Duthie et al	balloon	Scinti.	> 50 Mev	Upper limit (?) of discrete
8) Frye and Smith (1965)	balloon	Sparkchamber	~100 Mev	Upper Limit of discrete
9) Kraushaar and Clark	Expl. XI	gamma-telescope	>100 Mev	Upper Limit of discrete and isotropic source.
10) Greisen et al	balloon	sparkchamber	> 1 Bev	Upper Limit of discrete sources.
11) Fruin et al		EAS	$> 5.10^{12}$ e.v.	Upper Limit of discrete sources.
12) Chudakov et al		(Cerenkov light)		
13) BASJE		EAS (μ-les)	$> 10^{15}$ e.v.	

CAPTIONS

Fig. 1 Various Processes for generation of x-rays and γ-rays.

Fig. 2 The absorption of the radiations in the atmosphere. Altitudes where the radiations attenuate to indicated fraction are shown as the function of wavelengths.

Fig. 3 The absorption of the radiations in the interstellar space.

Fig. 4 The motion of the detector's field of view on the celestial sphere in the precession frame of reference. Zs in the spin axis and Zp is the precession axis. Dark shadows indicate the field of view. Shadowed band is the region which is scanned by the field of view per revolution. The region between dashed lines is scanned per precession cycle. X is the direction of the source.

Fig. 5 Energy response of a proportional counter. Radioactive sources are used as indicated.

Fig. 6 Principle and an example of experimental results of the modulation collimator.

Fig. 7 The regions of the sky scanned since 1964 by NRL and ASE are indicated by the light and dark shadows respectively. On most of the region maximum intensity of the source which might have escaped the detection is about 1/30 of the intensity of the SCO X-1. Observed discrete sources of x-ray are indicated by X.

Fig. 8 Observed discrete x-ray sources in the galactic coordinate.

CAPTIONS (cont.)

Fig. 9 X-ray sources near Sagittarius observed by ASE-MIT, NRL and Lockheed groups. (see the text).

Fig. 10 Tentative energy spectrum of SCO X-1. The spectrum is still very uncertain.

Fig. 11 Energy spectrum of the Crab Nebula.

Fig. 12 Relation of background counts and the solid angle of detectors. Lower point of NRL was obtained from the difference of counts when the detector was looking upwards and towards the earth. When d and e were taken, the veto-counter was not working properly.

Fig. 13 Summary of information for various suspected discrete sources of cosmic γ-rays. Theoretically expected curves under certain assumptions are shown. Energy spectrum for Tau A in x-ray region is shown.

Fig. 14 Summary on isotropic component of cosmic photons. Expected spectra of photons produced in the intergalactic or galactic space by various physical processes under assumptions on densities of energetic electrons and protons, and protons in the space are indicated. Star light density in the intergalactic space was calculated by Garmire. Radio measurements of Penzias and Wilson suggested a possibility that the universe is immersed in a background black body radiation of a few degrees Kelvin.

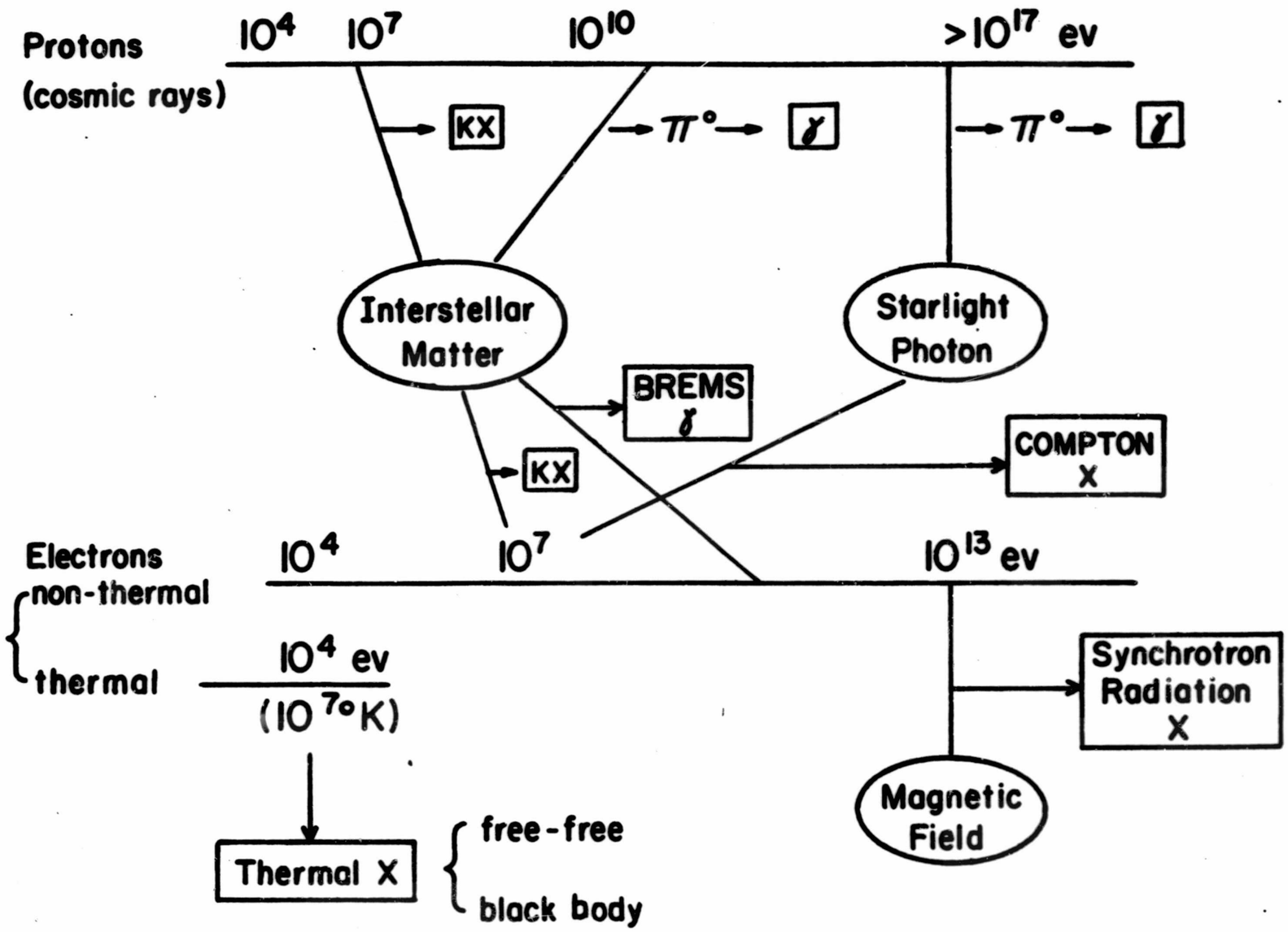
Protons
(cosmic rays)
10^4
10^7
10^{10}
$>10^{17}$ ev
KX
$\pi^\circ \rightarrow \gamma$
$\pi^\circ \rightarrow \gamma$
Interstellar Matter
Starlight Photon
BREMS γ
KX
COMPTON X
Electrons
non-thermal
thermal
10^4
10^7
10^{13} ev
10^4 ev
($10^{7\circ}$K)
Synchrotron Radiation X
Magnetic Field
Thermal X
free-free
black body

FIG I

ATTENUATION OF RADIATION IN THE ATMOSPHERE

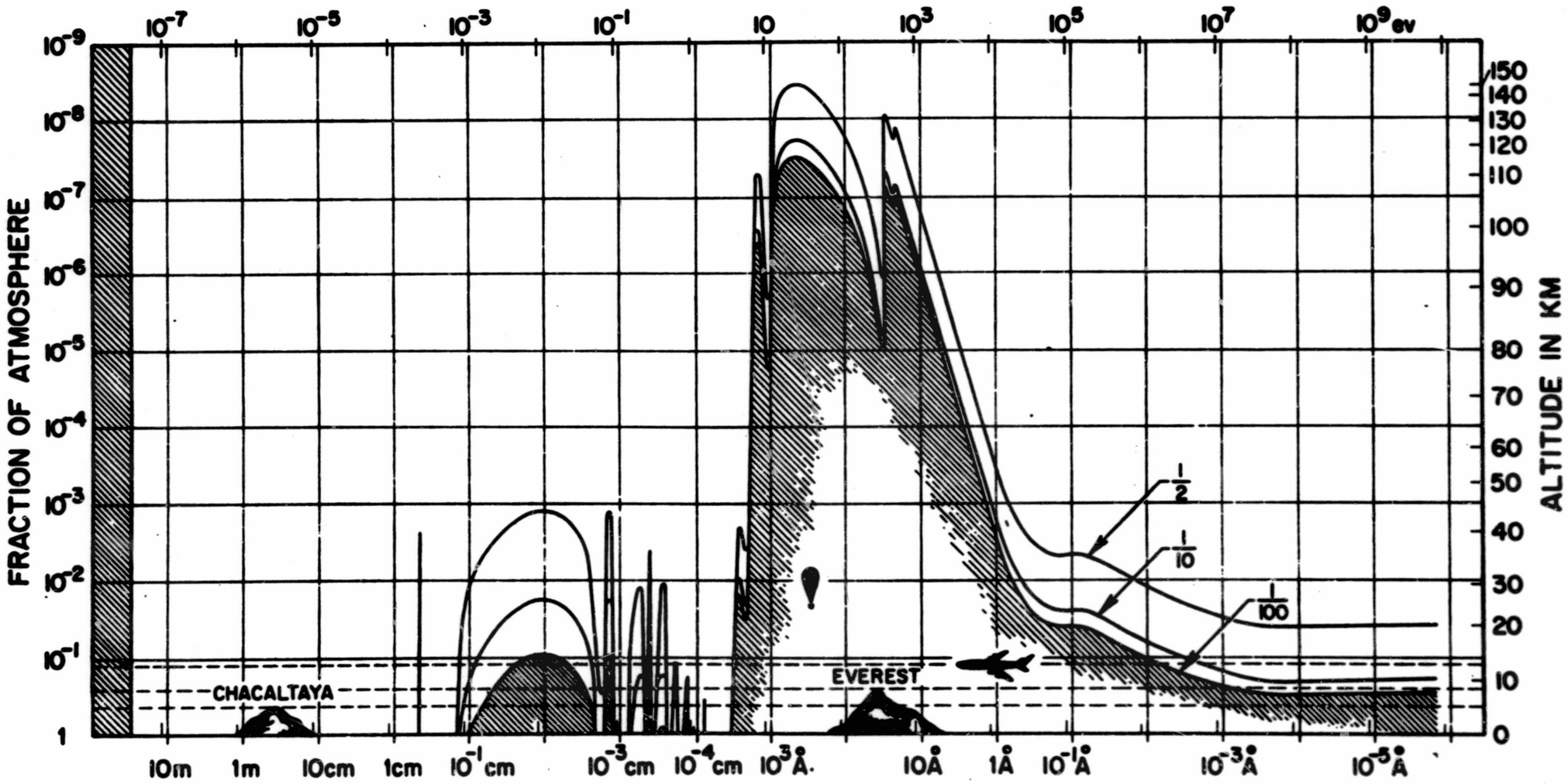

FIG 2

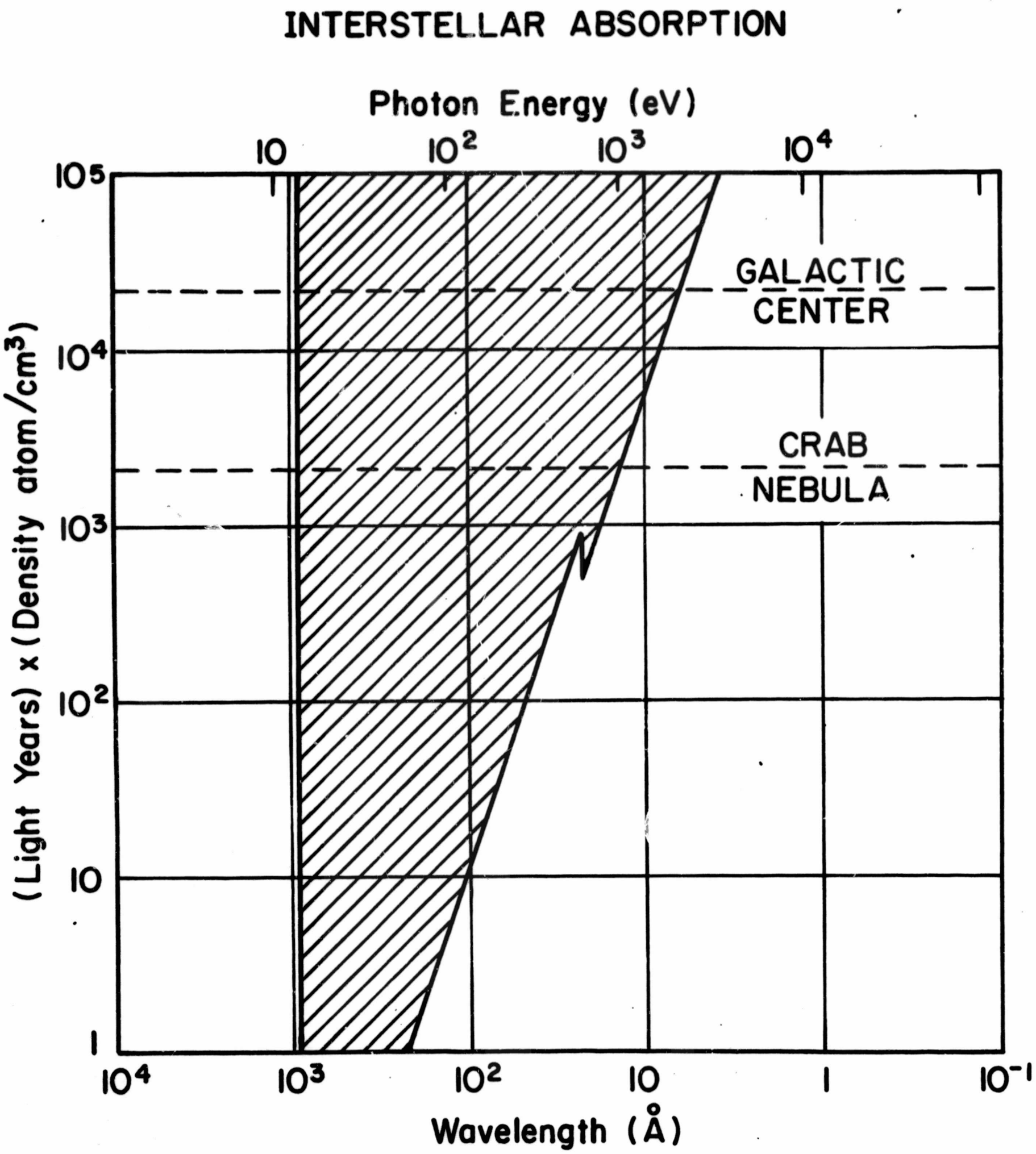
INTERSTELLAR ABSORPTION
Photon Energy (eV)
10
10²
10³
10⁴
10⁵
10⁴
10³
10²
10
1
(Light Years) x (Density atom/cm³)
GALACTIC CENTER
CRAB NEBULA
10⁴
10³
10²
10
1
10⁻¹
Wavelength (Å)

FIG 3

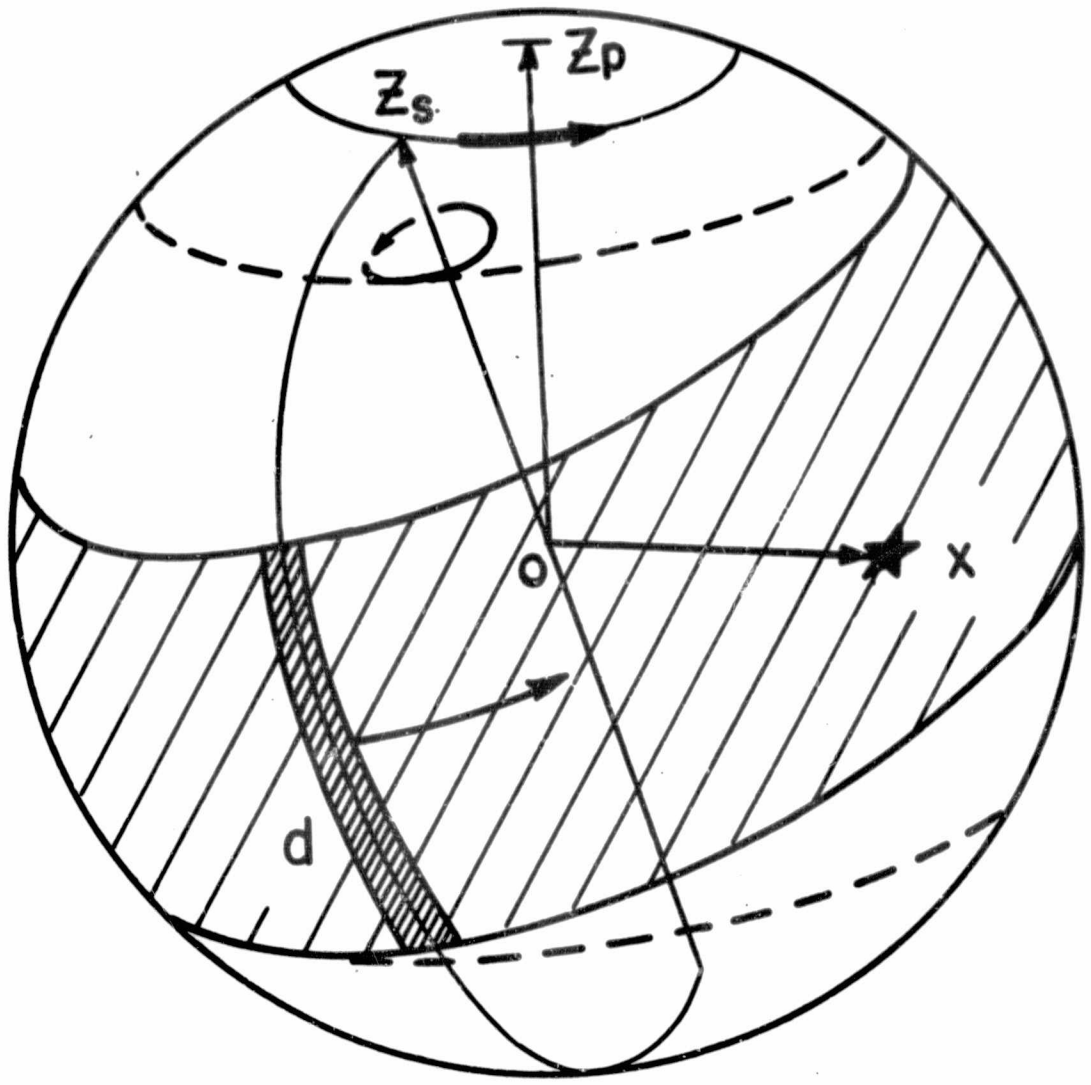

MOTION OF DETECTOR FIELD OF VIEW ON THE CELESTIAL SPHERE

FIG 4

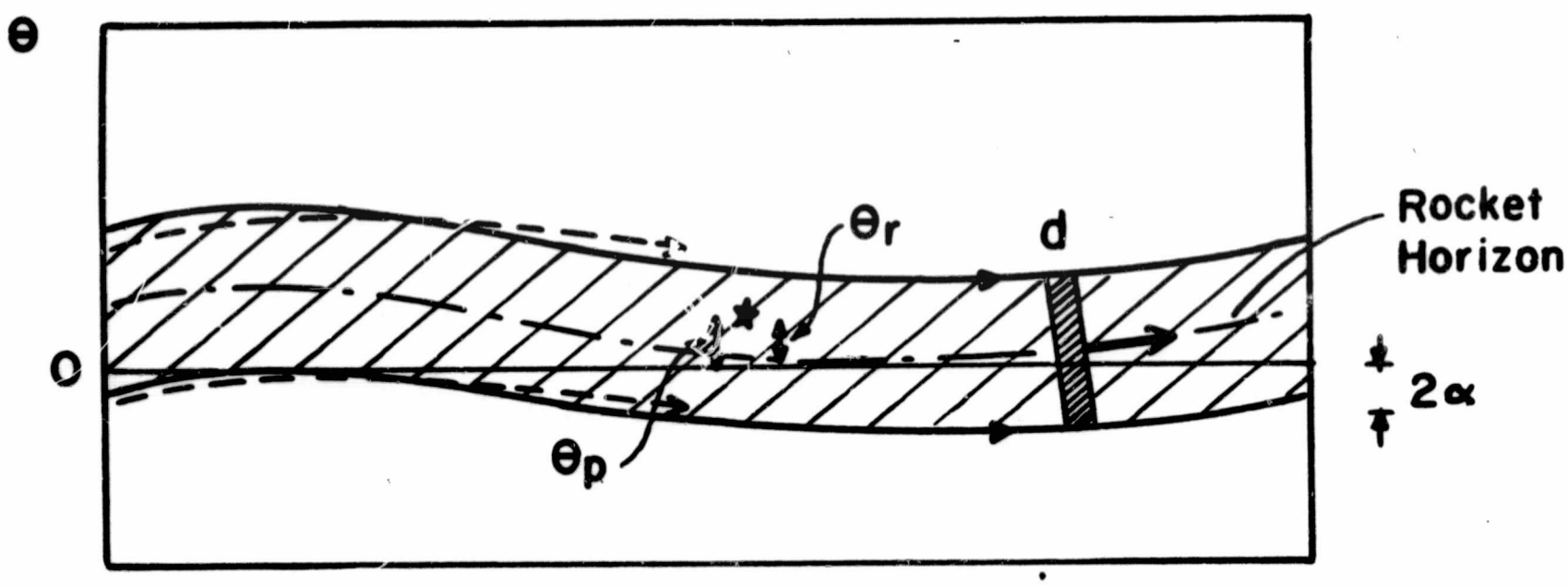

MOTION OF DETECTOR FIELD OF
VIEW IN THE PRECESSION
FRAME OF REFERENCE

FIG. 5

RESPONSE OF PROPORTIONAL COUNTERS TO MONOENERGETIC X-RAYS

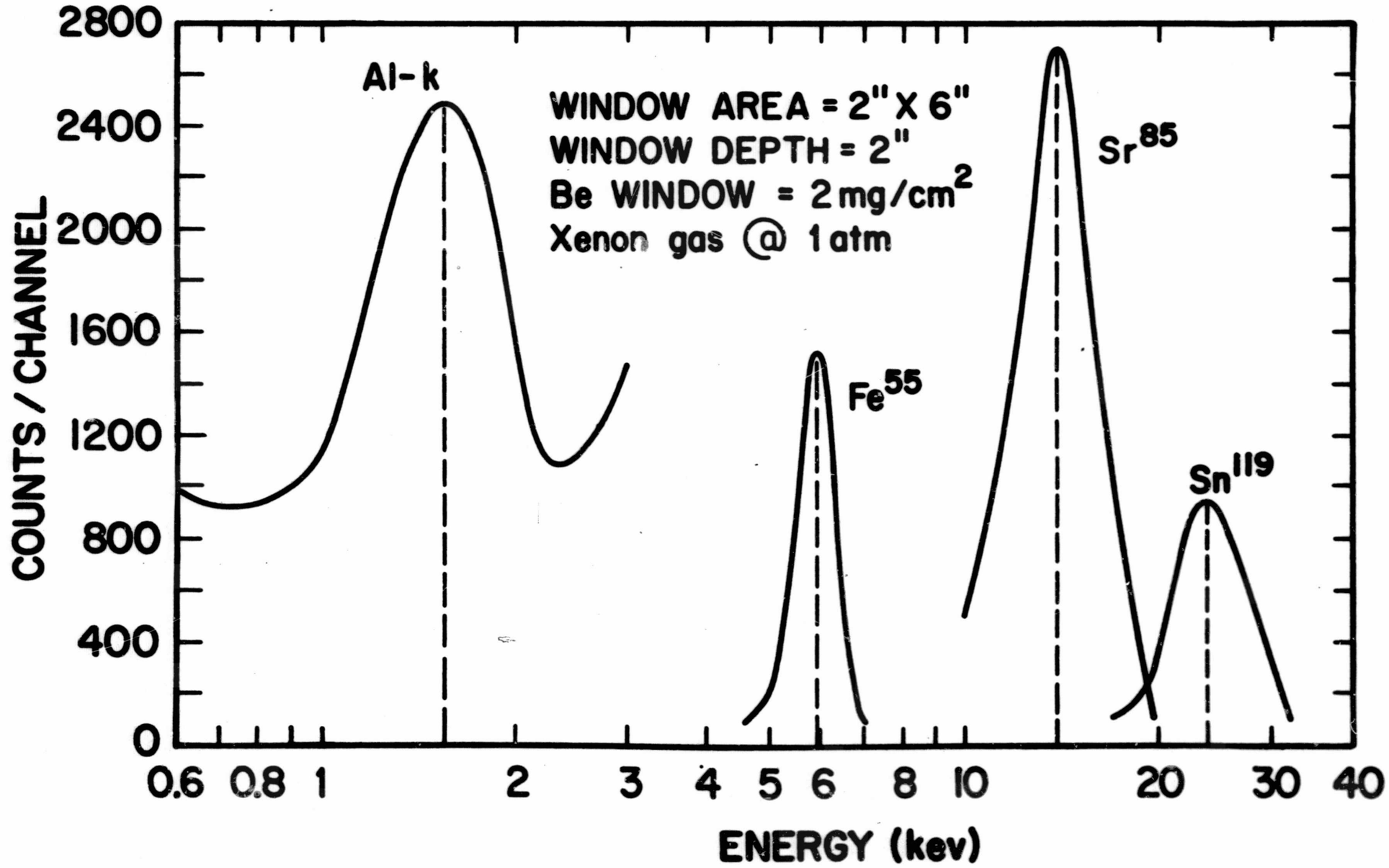

FIG 6

PRINCIPLE OF MODULATION COLLIMATOR

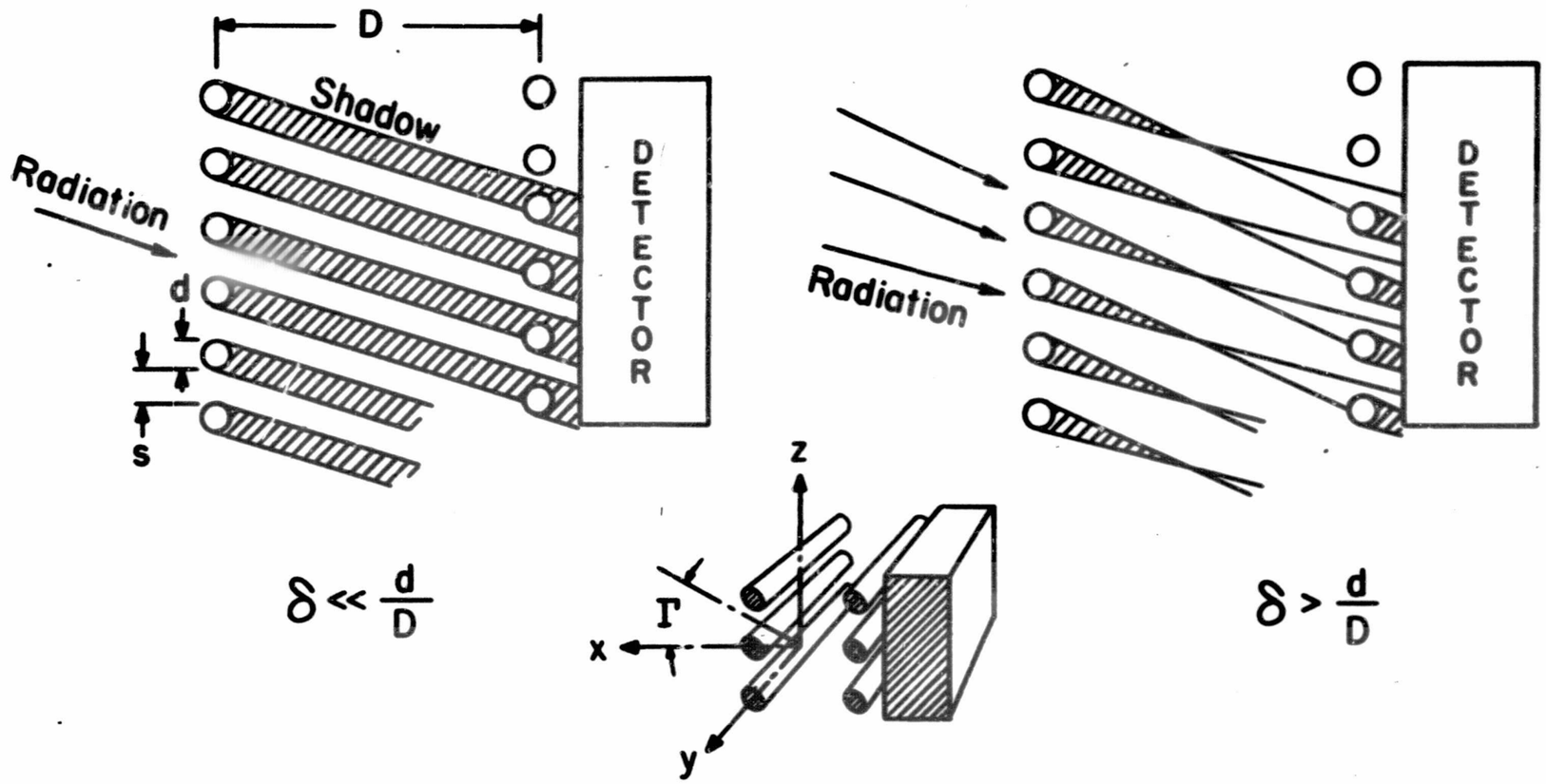

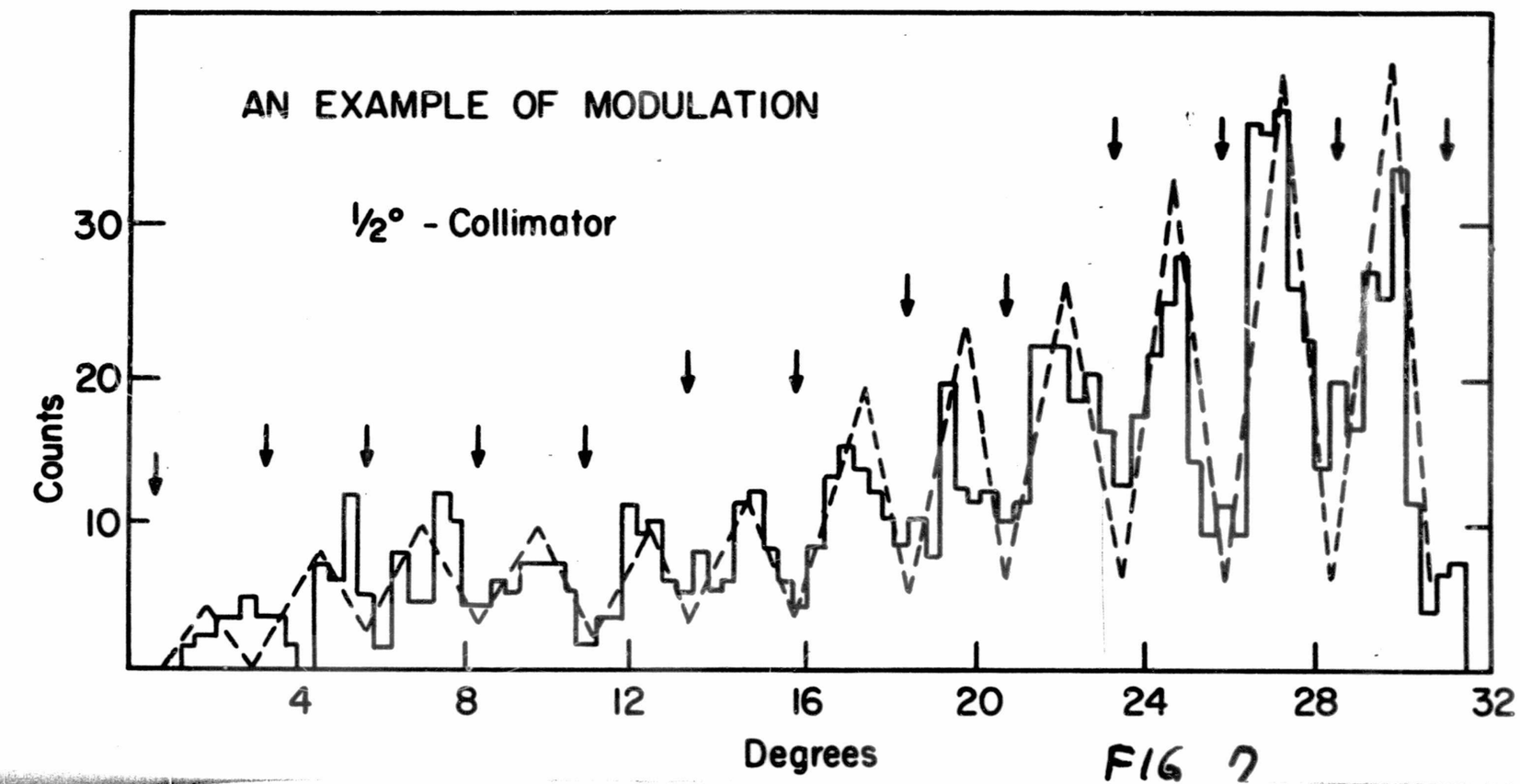

FIG 7

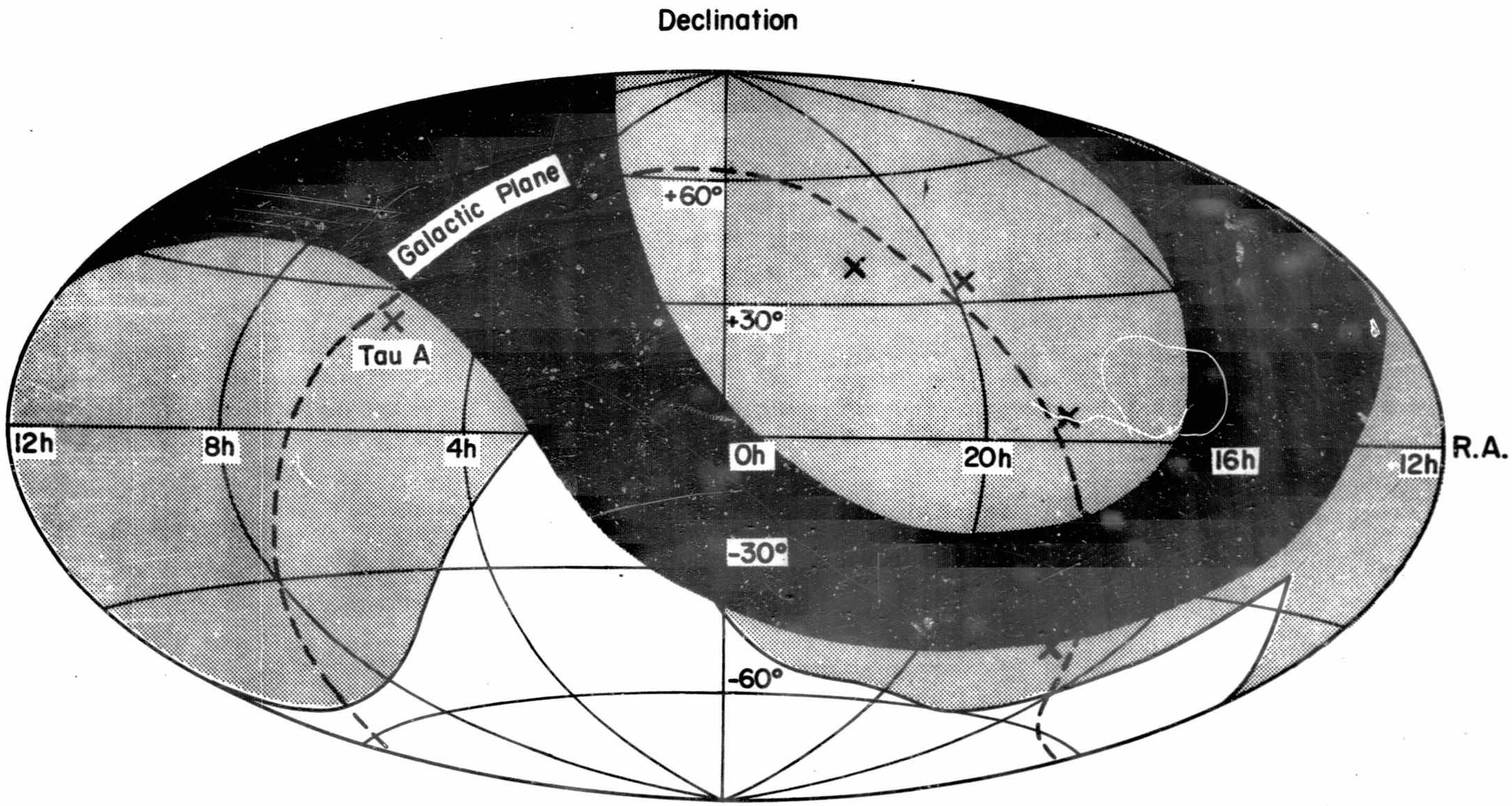
Declination
Galactic Plane
+60°
+30°
Tau A
12h
8h
4h
0h
20h
16h
12h
R.A.
-30°
-60°

FIG 8

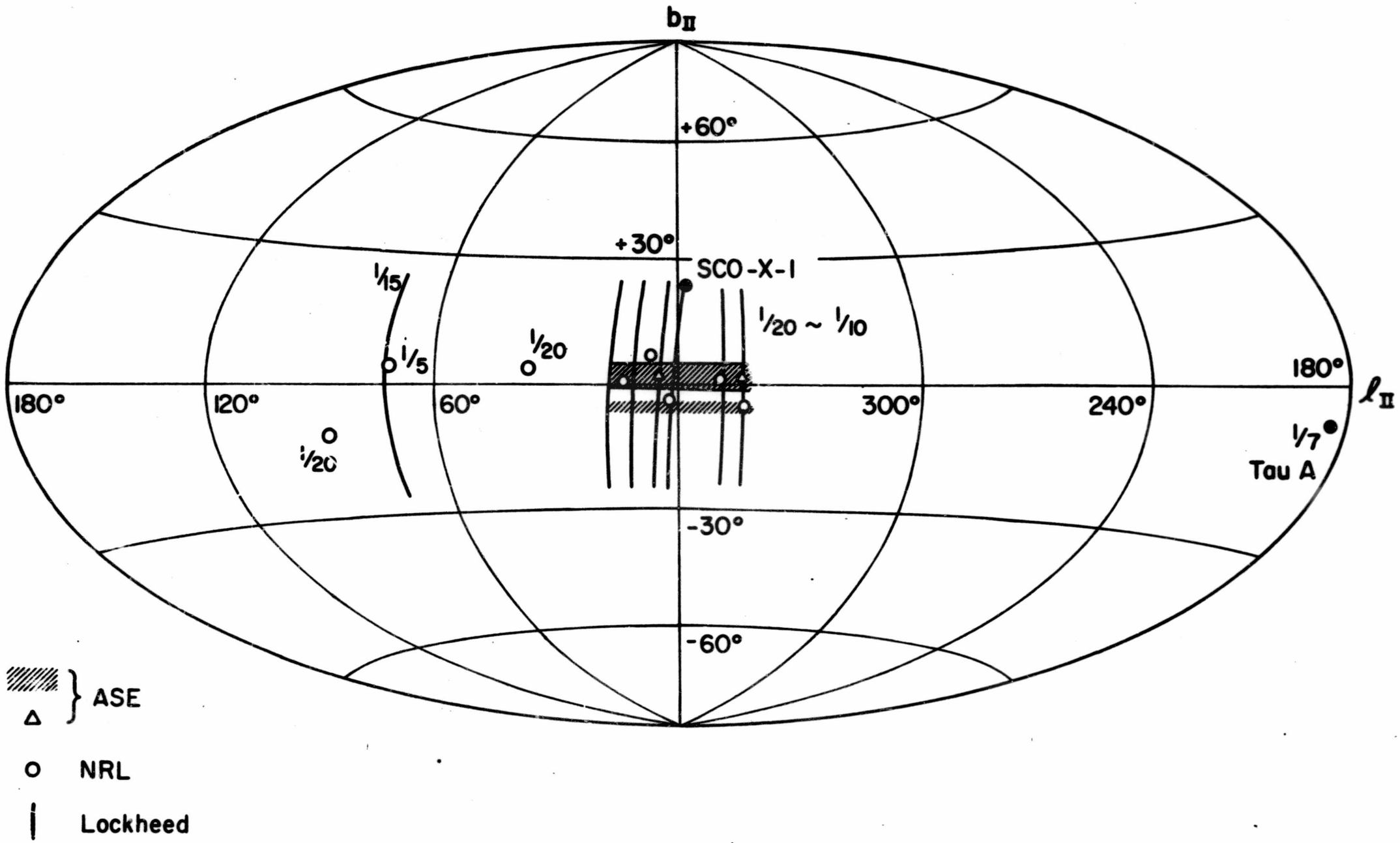

OBSERVED X-RAY SOURCES ON THE GALACTIC COORDINATE

FIG 9

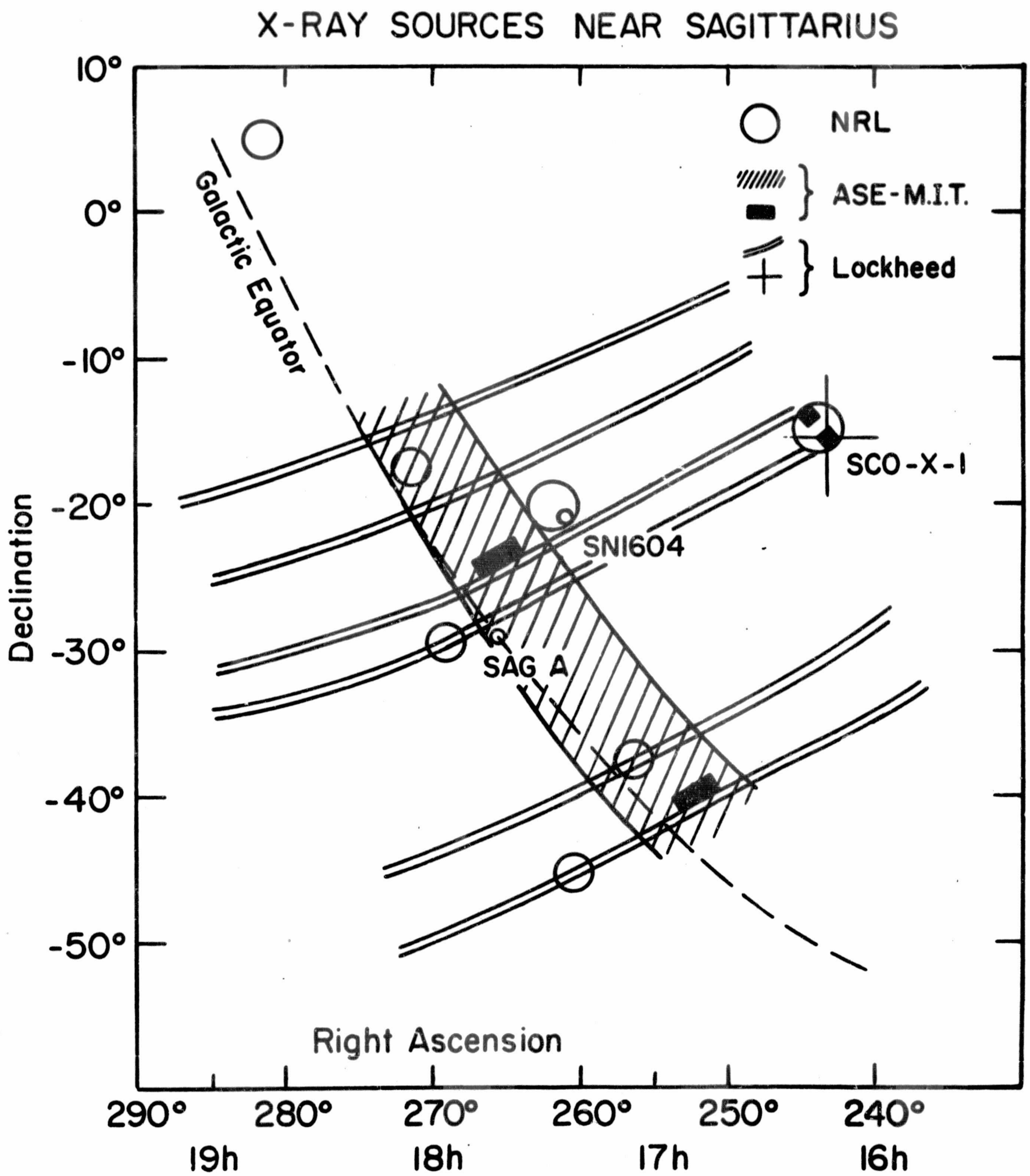
X-RAY SOURCES NEAR SAGITTARIUS
NRL
ASE-M.I.T.
Lockheed
Galactic Equator
SCO-X-1
SN1604
SAG A
Declination
10°
0°
-10°
-20°
-30°
-40°
-50°
Right Ascension
290°
280°
270°
260°
250°
240°
19h
18h
17h
16h

FIG 10

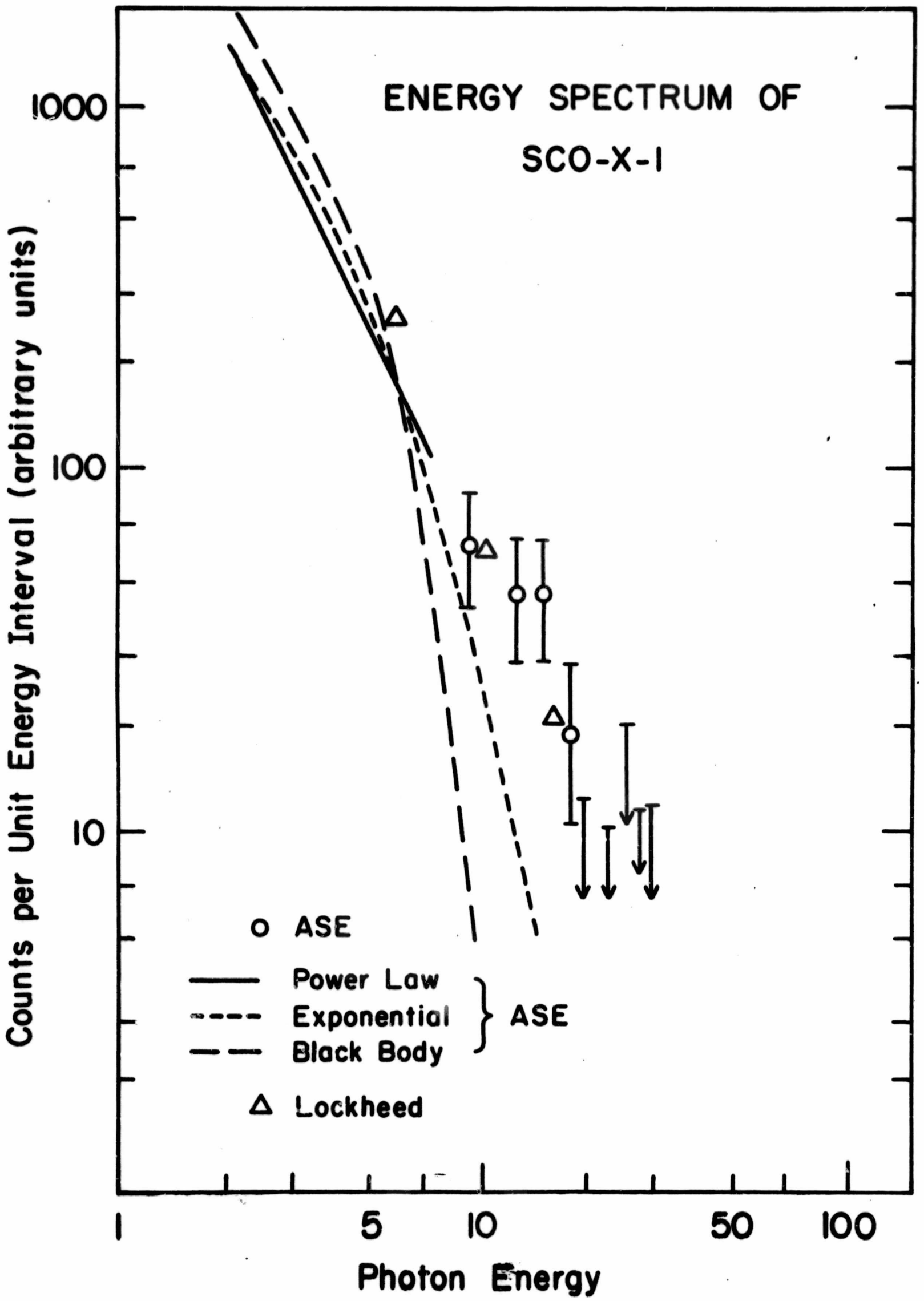
ENERGY SPECTRUM OF
SCO-X-1
1000
100
10
Counts per Unit Energy Interval (arbitrary units)
o ASE
Power Law
Exponential
Black Body
ASE
Δ Lockheed
1
5
10
50
100
Photon Energy

FIG 11

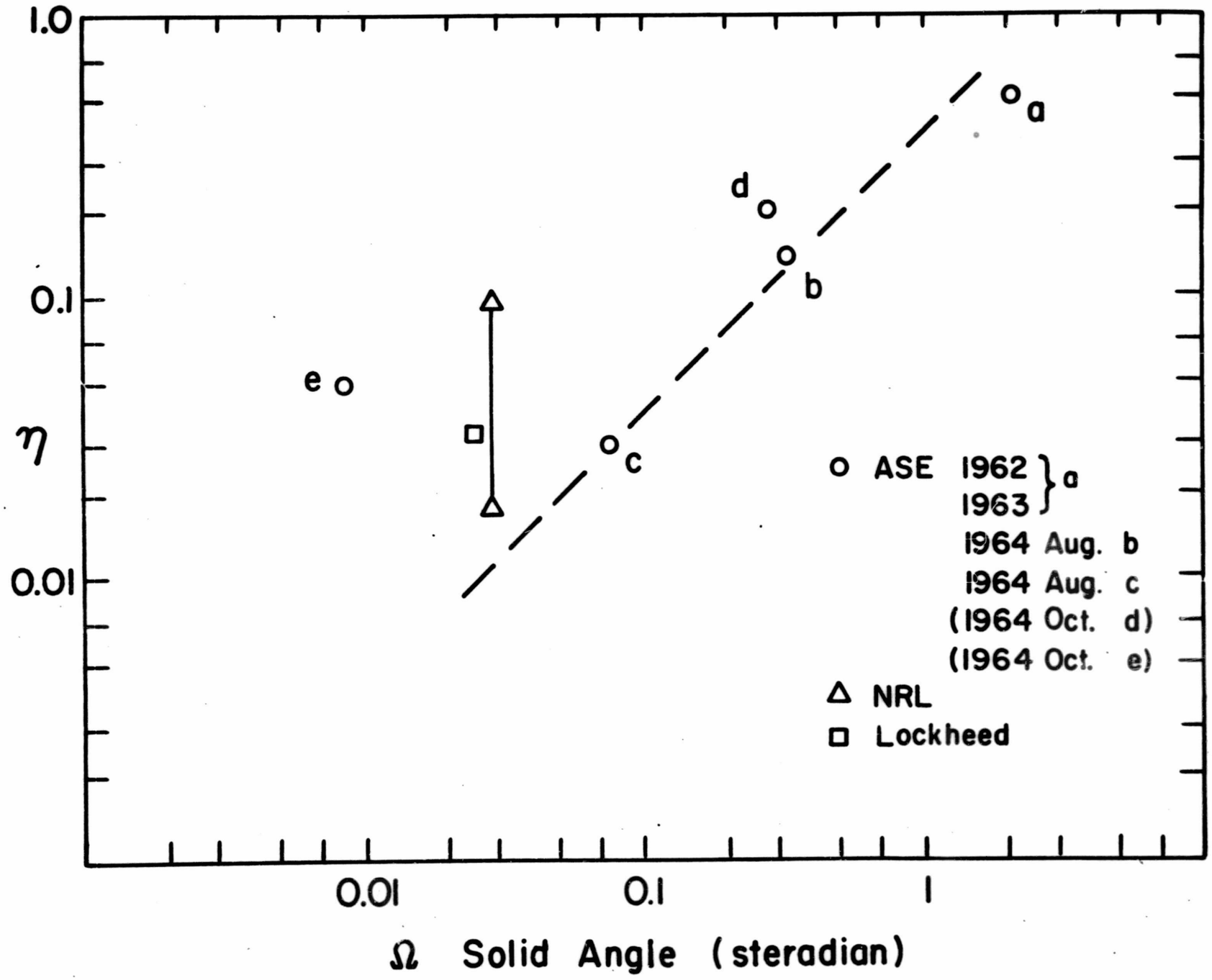

η = observed counting rate of background/peak counting rate of SCO - X - 1

FIG 12

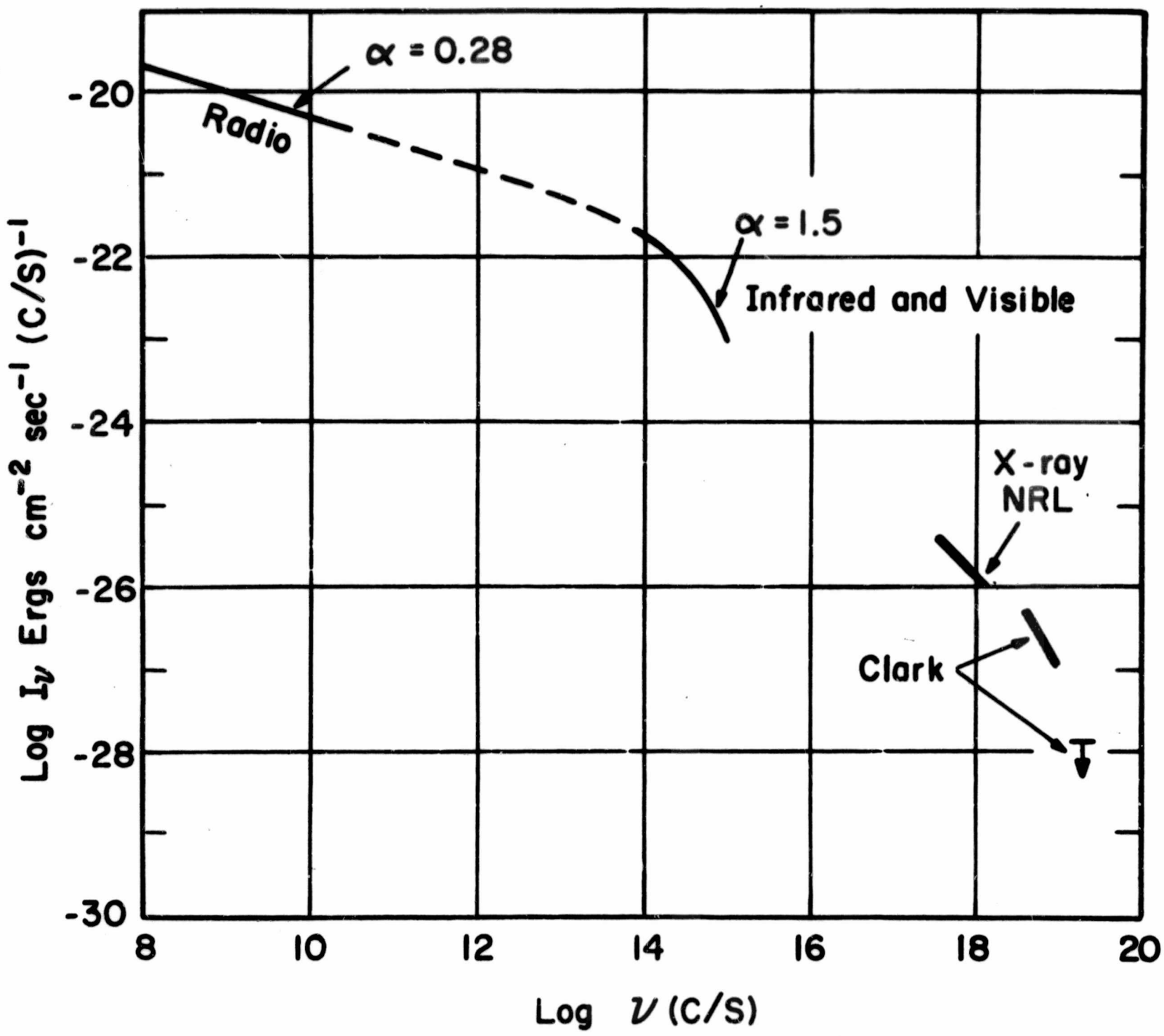

SPECTRUM OF CRAB NEBULA

FIG 13

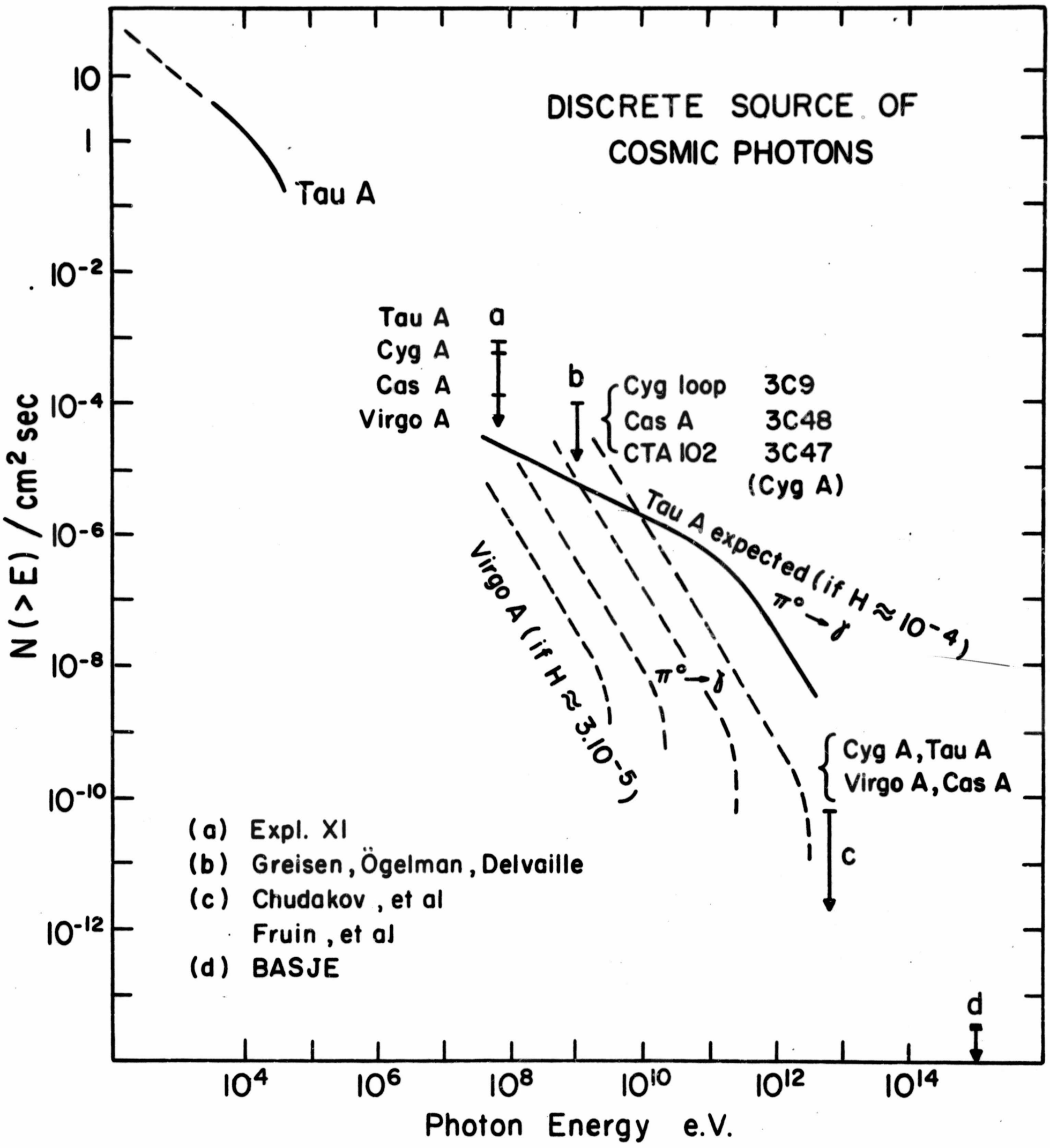
DISCRETE SOURCE OF
COSMIC PHOTONS
Tau A
Tau A
Cyg A
Cas A
Virgo A
a
b
Cyg loop
Cas A
CTA 102
3C9
3C48
3C47
(Cyg A)
Tau A expected (if H ≈ 10⁻⁴)
π° → γ
Virgo A (if H ≈ 3.10⁻⁵)
π° → γ
Cyg A, Tau A
Virgo A, Cas A
c
d
(a) Expl. XI
(b) Greisen, Ögelman, Delvaille
(c) Chudakov, et al
Fruin, et al
(d) BASJE
N (>E) / cm² sec
10
1
10⁻²
10⁻⁴
10⁻⁶
10⁻⁸
10⁻¹⁰
10⁻¹²
10⁴
10⁶
10⁸
10¹⁰
10¹²
10¹⁴
Photon Energy e.V.

FIG 14

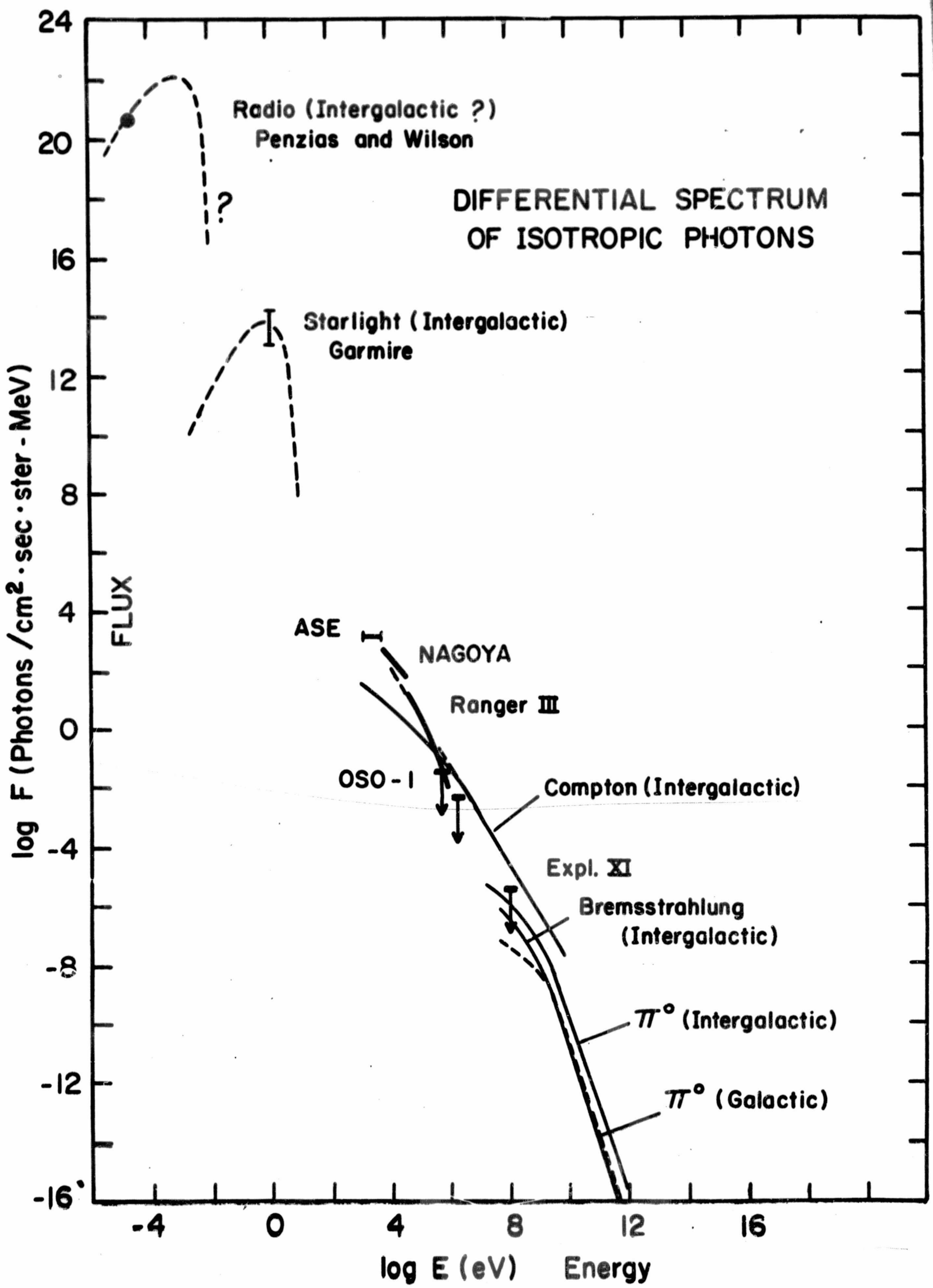
DIFFERENTIAL SPECTRUM
OF ISOTROPIC PHOTONS
Radio (Intergalactic ?)
Penzias and Wilson
?
Starlight (Intergalactic)
Garmire
ASE
NAGOYA
Ranger III
OSO - I
Compton (Intergalactic)
Expl. XI
Bremsstrahlung
(Intergalactic)
π° (Intergalactic)
π° (Galactic)
log F (Photons /cm² · sec · ster - MeV)
FLUX
log E (eV)
Energy
24
20
16
12
8
4
0
-4
-8
-12
-16
-4
0
4
8
12
16

FIG 14