ms!

[redacted]

GPO PRICE $ ________

CFSTI PRICE(S) $ ________

Hard copy (HC) 3.00

Microfiche (MF) .75

ff 653 July 65

FAIRCHILD HILLER
REPUBLIC AVIATION DIVISION
FARMINGDALE, LONG ISLAND, NEW YORK

FACILITY FORM 602

N66 26703 (ACCESSION NUMBER)	(THRU)
99 (PAGES)	1 (CODE)
CR 75066 (NASA CR OR TMX OR AD NUMBER)	15 (CATEGORY)

FHR 3232
February 1966

FINAL REPORT

DEVELOPMENT OF TOOLING, PRODUCTION PROCEDURES, AND PRODUCTION OF 57-INCH BULKHEADS

Contract No. NAS 8-11500
Control No. CPB-04-37525-63

Gunther Pfanner

Prepared for
George C. Marshall Space Flight Center
National Aeronautics and Space Administration
Huntsville, Alabama 35812

Manufacturing Research
Fairchild Hiller
Republic Aviation Division
Farmingdale, New York

FOREWORD

This final report covers the work performed under Contract NAS 8-11500, Control Number TP3-82468 (1F), CPB-04-37525-63, July 1964 to December 1965. It is published for technical information only and does not necessarily represent the recommendations, conclusions or approval of the National Aeronautics and Space Administration.

This contract with the Republic Aviation Division of the Fairchild Hiller Corporation was initiated by the Manufacturing Engineering Division of the George C. Marshall Space Flight Center, Huntsville, Alabama.

The work was performed by the Republic Aviation Manufacturing Research Department. The contract was administered by the Contracts Branch, Procurement and Contracts Office of the George C. Marshall Space Flight Center. Mr. David Hoppers of MSFC conducted the technical liaison. Mr. Robert Dishman and Mr. Paul Schuerer were responsible for technical supervision.

This report has been prepared by Mr. Gunther Pfanner who was the principal investigator. The forming experiments were conducted by Messrs. Peter D'Aguanno, Peter Bonde, Peter Seese and Walter Kastle. Their dedication and suggestions are appreciated. Messrs. Frank Hoppe, Manuel Broullon and Alex Sirotkin also contributed technical and labor saving suggestions.

TABLE OF CONTENTS

LIST OF ILLUSTRATIONS

LIST OF ILLUSTRATIONS (Continued)

LIST OF TABLES

ABSTRACT

26703

Thin 57-inch ellipsoid bulkheads were fabricated in 2219-T6 aluminum alloy for subsequent welding into liquid oxygen test tanks. A sequence of fabrication operations involving hydraulic forming, selective chemical milling, heat treatment and contour sizing were developed to obtain close diameter and thickness dimension ranges. The principal development aspects were involved with obtaining forming control of the draw/stretch ratio to avoid buckling or splitting failures. These factors constitute a problem area in aluminum alloys at the high diameter ratio (715:1) of the 57-inch bulkhead blanks.

Experimental difficulties were satisfactorily resolved, and a general method of forming control which follows empirical and analytical relationship was evolved. The specific accomplishments under this contract include:

- a segmented pressurized metal bladder for localized control of the workpiece flange
- an optimized stretch-draw (or depth-draw) relationship
- an inexpensive reinforced fiberglass die concept
- a unique hinged flange and pressurization design
- an expandable seal against the moving workpiece surface

SECTION I

INTRODUCTION

This report describes the development of forming techniques for ellipsoid bulkheads in 28" and 57" diameter aluminum alloy. Originally, fabrication of 105" bulkheads was also intended but experimental difficulties with the 57" size precluded further work within the contract funding. The 28" bulkheads, which are about 1/4 the area of the 57" bulkheads, were formed to obtain process information. The 57" bulkheads were formed for subsequent assembly into liquid oxygen tanks at MSFC. The required specifications are:

Material: 2219 aluminum
Final Condition: - T6
Thickness: .050 + .008 - .000 inches
Contour: 1:1.4 ellipse; $X^2 + 2y^2 = 812.25$
Outside Diameter: 57.000 +.030 - .030 inches.

The principal area of forming difficulty lies in the relative thinness in relation to the diameter and depth which tends to produce buckling, wrinkling, or thinout failures. The methods which were originally considered include:

Hydroforming. In this method the blank edges are sandwiched under continuously variable pressure while a male punch pushes the work piece against a pressurized rubber bladder. The process has the combined advantages of stretch-draw control due to:

- flange pressure control
- variable forming pressure
- friction between punch and bladder

These controls permit forming of domes with less thinout than any other process, but the largest hydroform machine is currently 28".

Draw press forming. The cost of matched male-female dies makes this method attractive only for large production runs and excludes it for the prototype production such as involved in this program. Bulkheads such as 57" and 105" can be formed by draw press forming, but the cost per part is also high due to the requirement for several successively deeper forming operations to allow for changes in flange lubrication and pressure (see Appendix E).

Spinning - Lathes up to 170-inch diameter are available. Due to the large diameter/thickness ratio and large depth/diameter ratio, there can be little flow of metal from the blank diameter into the shape without undesirable buckling. Consequently, the spinning operation is largely a shear flow operation which implies extreme deformation (reduction in thickness) near the trim line for relatively deep parts such as the 1:1.4 elliptical domes of this program. To obtain the material ductility to permit such deformation, moderate mandrel temperatures (300°F) are required.

Electrohydraulic (EH) Forming - This is a high energy rate forming process which uses stored capacitor energy discharged in water (rather than an explosive charge) to produce high intensity, short duration pressure pulses which deform metal workpiece sheets at high strain rates. Only a female die is required. For dome of the 1 to 1.41 ellipsoid depth, thinout changes gradually from the original sheet thickness at the trim line to 2/3 of the original thickness at the dome center.

It was decided to begin Phase I with comparative experiments involving spinning, EH, and a combination of these processes. The results indicated that better surface finish and thinout control were available with the EH process. This process was employed for the bulk of the Phase I work with 28-inch bulkheads to establish techniques and reference data for the Phase II work with the 57-inch bulkheads.

In Phase II, twenty-seven forming experiments were conducted in the 57-inch size. The first six experiments employed the EH method and established that the 57-inch size in a deep dome was just about the limit of the power and energy capability of the 155,000 joule capacitor bank in that the ellipsoid contour could barely be attained. The tooling was revised to permit hydraulic forming (HF) with liquid pressure directly on the upper workpiece surface. The next nine experiments with

HF established flange control parameters, but included periods of experimental difficulty resulting from pressure plate bending and yielding due to weld cracking in the steel structure below the fiberglass die surface. The last twelve experiments employed the HF method with suitably reinforced tooling. Sealing difficulties limited the forming pressure to about 250 psi, but this pressure was adequate to produce smooth and accurate contour conformance provided the flange restraint was controlled to minimize contour buckling in the early forming stages. When combined with selective chemical milling, the process repeatedly produced 57-inch bulkheads to the required thickness, diameter, and heat treated condition.

The balance of this report describes the above experiments, tooling and procedures in greater detail.

SECTION II

PHASE I - REDUCED SCALE EXPERIMENTS WITH 28" BULKHEADS

A. SPINNING AND SPINNING/EH FORMING

About twelve companies have spinning equipment which can handle blank diameters as large as 144". These companies were contacted by letter and telephone to discuss their interest, approach and capability with regard to the spinning of 105" bulkheads as well as 28" reduced scale bulkheads. Upon receipt of quotations two companies (Phoenix Products, Incorporated, Milwaukee, and G&G Metal Spinners, Indianapolis) were selected to form six (6) 28" bulkheads. This work was supported under a Republic Aviation program to investigate techniques of forming large, thin bulkheads. Due to the lack of industry experience with such work, it was considered advisable to conduct essentially the same experiments with both spinners.

The objective of the experiments were:

- to establish the thinout surface finish and contour conformance of domes spun to full depth.
- to obtain partially spun domes for subsequent electrohydraulic (EH) forming to full depth (combination forming).

1. Spinning Full Depth Domes

The most marked feature of 28" domes which were spun from .063" blanks by G&G and Phoenix was the extreme thinout that occurs near the trim line of the part. Figures 1 and 2 show that the thinnest regions were about .032". These parts were spun over male contour mandrils. Discussions with both companies established that modification in spinning procedure such as a smaller diameter starting blank or prior spinning into a female cavity could reduce thinout variation. Thinout would still be greatest at the trim line, but thickness at this point could be held as high as .042". A heavier trim line from a .063" blank in a spinning process is not considered possible since the shape is primarily obtained by shear rather

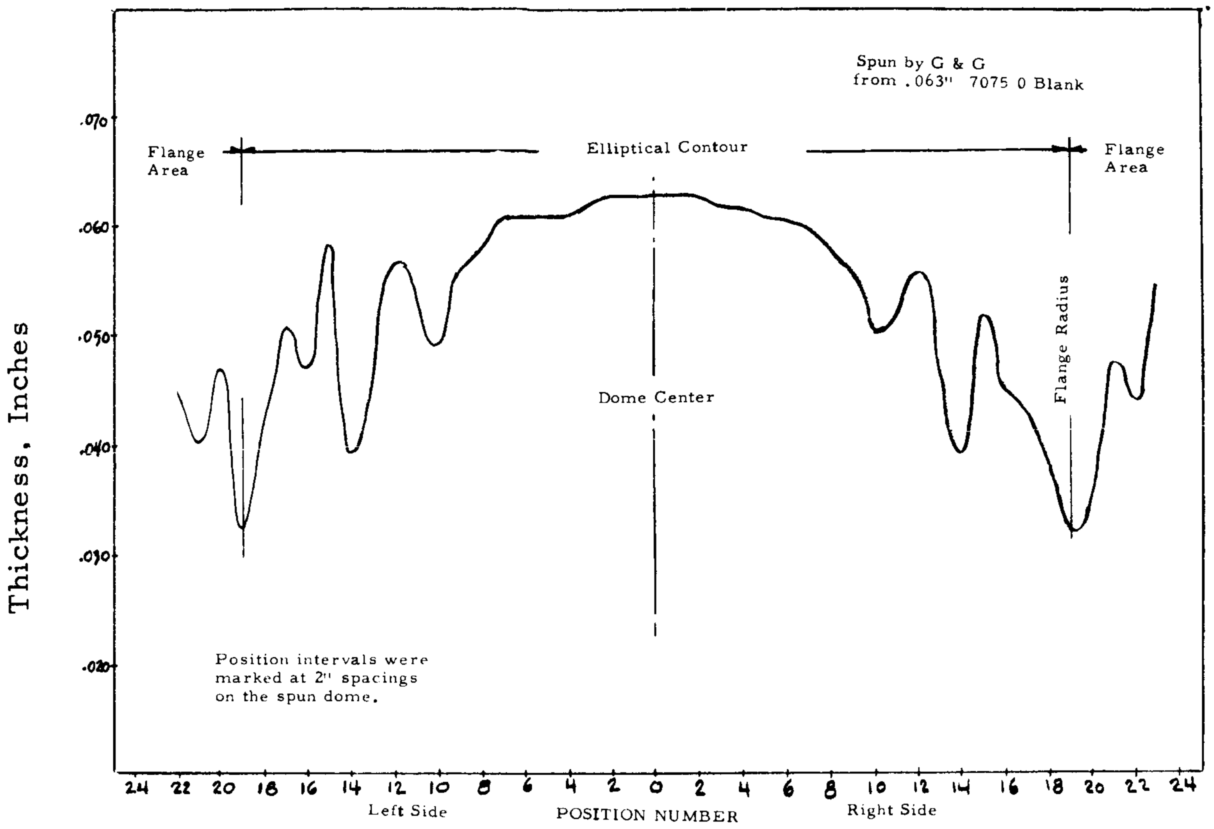

THICKNESS GRADIENT OF SPECIMEN 3
SPUN TO 28-INCH DIAMETER X 10-INCH DEEP ELLIPTICAL CONTOUR

FIGURE 1

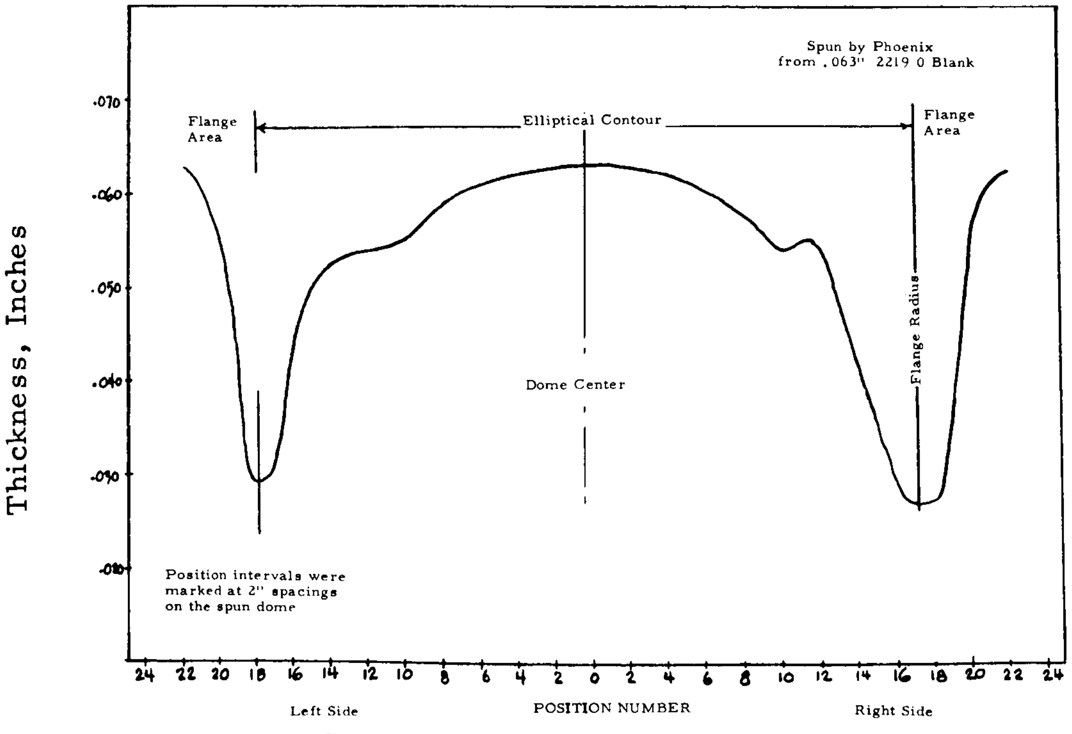

THICKNESS GRADIENT OF SPECIMEN 22
SPUN TO 28-INCH DIAMETER X 10-INCH DEEP ELLIPTICAL CONTOUR

FIGURE 2

than distribution of surface area. Redistribution, which is drawing of metal from the flange is not possible since thin sheets cannot compress and thicken without buckling as the flange assumes a smaller diameter.

Differences in technique in the shear spinning of the dome sides is apparent in Figures 1 and 2 in that the Phoenix dome does not contain the erratic changes in thickness of the G&G dome. In both cases however, it was necessary to coin the metal with the spinning roller to the degree that roller grooves in the surface were pronounced (see Figure 3 bottom). Microinch surface roughness readings were above the 1,000 value of profilometer measurement. By contrast, parts formed by EH stretch-draw averaged 90 microinches.

2. Spinning/EH Forming

In spinning over a male mandril, parent thickness is retained at the dome center and thinout increases toward the bulkhead periphery. In pressure forming, the situation is reversed in that the periphery (flange) retains its parent thickness (actually increases slightly with draw), and the dome center thins out. Consequently, it seemed appropriate to employ a combination process; namely, to partly form a part by spinning and then to complete the part by electrohydraulic EH forming to obtain more uniform thinout over the contour. Three experiments employing this procedure were partly successful in that EH produced the greatest thinout in the heavier dome center. See Figure 4 . However, fracture occurred along the line of extreme spinning thinout.

3. Spinning - Conclusions

Spinning experiments were discontinued due to the surface roughness and extreme thinout.

The combined spinning/EH process was not continued since selective chemical milling was found to be an effective method in reducing parts with gradual thinout gradient to a uniform finished dimension.

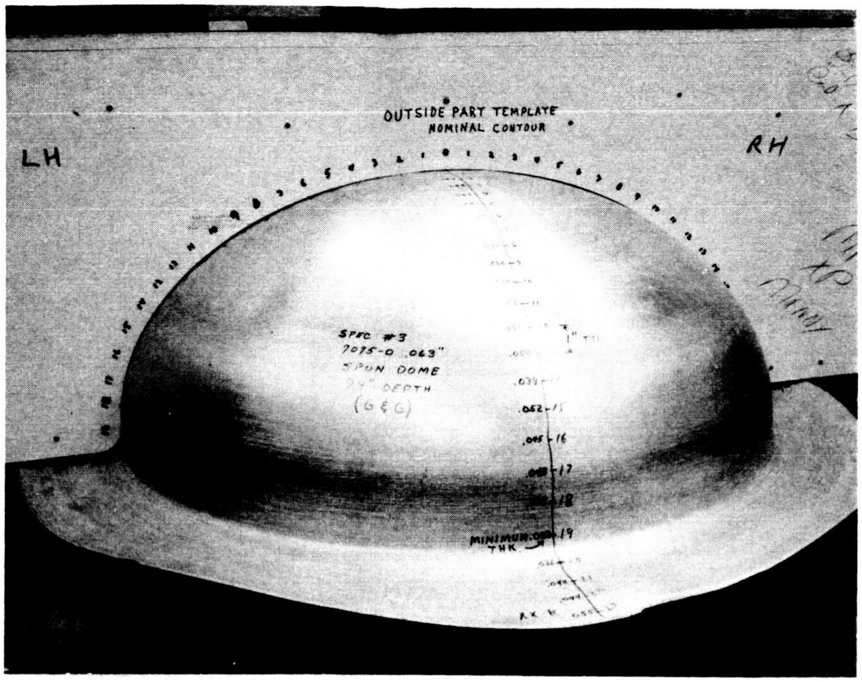

FULL DEPTH 1.414:1 28" SPUN DOME SHOWN ON TEMPLATE
The markings on the template and dome indicate measurement positions and thickness measurements. The small arrow near the flange radius indicates the thinnest (.032") region.

ENLARGED VIEW TO SHOW SURFACE TOOL MARKS

FIGURE 3

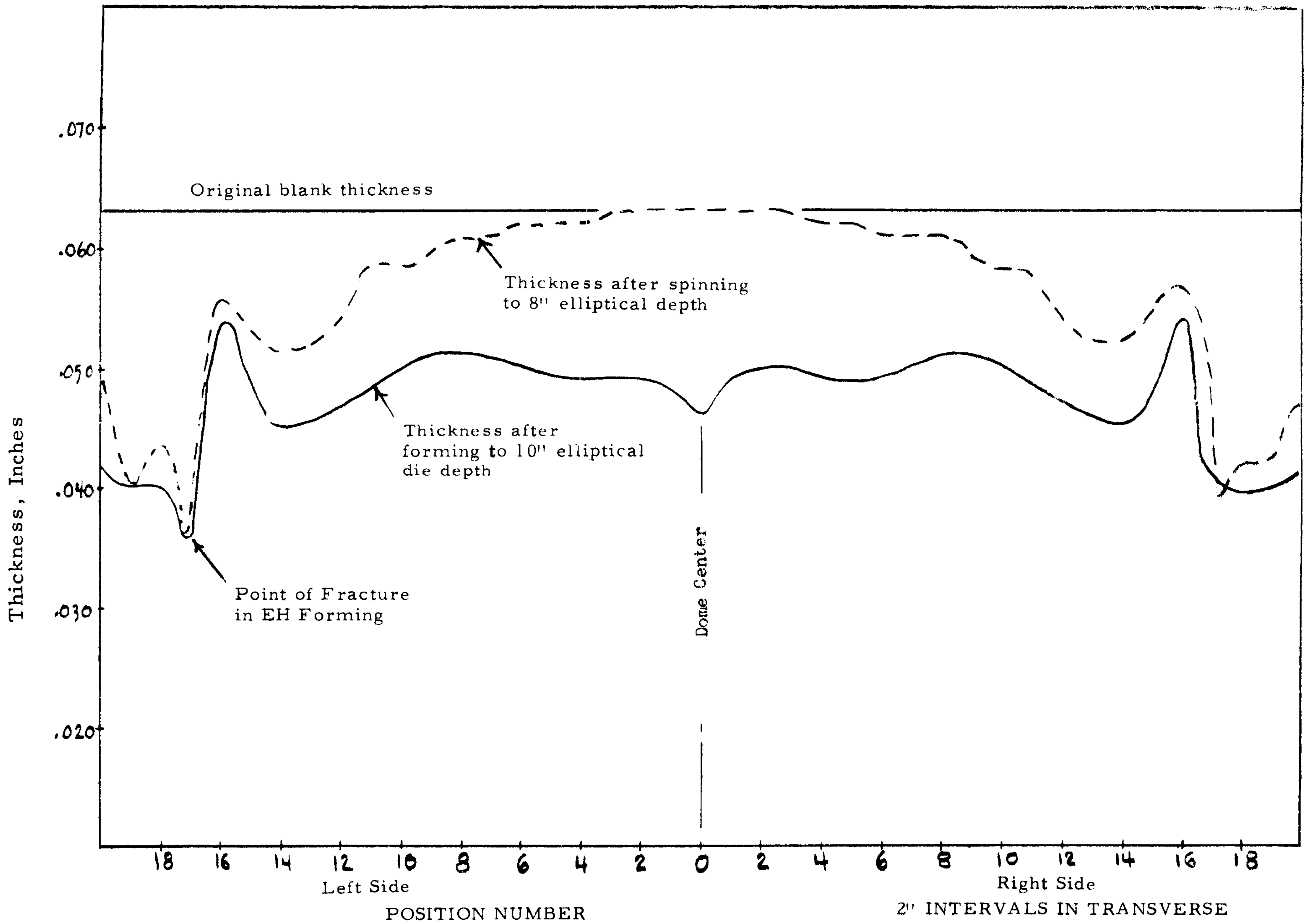

THICKNESS GRADIENT AFTER SPINNING AND EH FORMING (SPECIMEN 12) 2219-O ALUMINUM .063"
FIGURE 4

B. ELECTROHYDRAULIC FORMING 28" BULKHEADS

1. Equipment, Tooling, Procedure

Most electrohydraulic (EH) forming experiments were conducted with the 960 uf (155,000 joule) capacitor bank which has a no load frequency of about 10 KC. The capacitor bank is charged by six G.E. K-9207372 power supplies containing bridge type kenetron rectifiers connected in parallel. The bank can be charged to 18 KV in approximately 20 seconds when output charging current is set for maximum.

The switching apparatus employed a high vacuum switch and an associated vacuum system. The switch consists of a sealed chamber connected to the vacuum system which maintains a vacuum level of 10^{-5} mm Hg. Triggering of the switch is accomplished by energizing an ignitor plug which causes ionization by creating a momentary pressure rise in the switch.

An arrangement of electrodes, tank, and die, similar to that of Figure 5 was employed except that a 28" kirksite die and a suitable adapter to the water tank were employed. The tank was filled with water to approximately 20" height which corresponds to 237 gallons of water, requiring less than one minute to fill and 4 minutes to drain by siphoning with 1-1/2 inch hose.

The 28" bulkheads were formed with either the kirksite die shown in Figure 6 or the fibreglass die shown in Figure 7. The fibreglass has a tensile strength of 25,000 psi. Since the die did not crack or craze, and since fibreglass die costs are about 50% lower than cast, machined dies, the fibreglass shell concept, reinforced with steel ribs, was also employed for the 57" bulkheads.

In the EH process, the vaporization of the submerged initiation wire produces gaseous products which are momentarily restricted by the inertia of the surrounding water. Consequently, a high pressure wave of approximately 100 microsecond duration is produced. The pressure wave expands outward in all directions and the portion which is directed at the workpiece produces plastic deformation. The pressure intensity in the wave diminishes in approximate proportion to the distance the wave has traveled toward the workpiece.

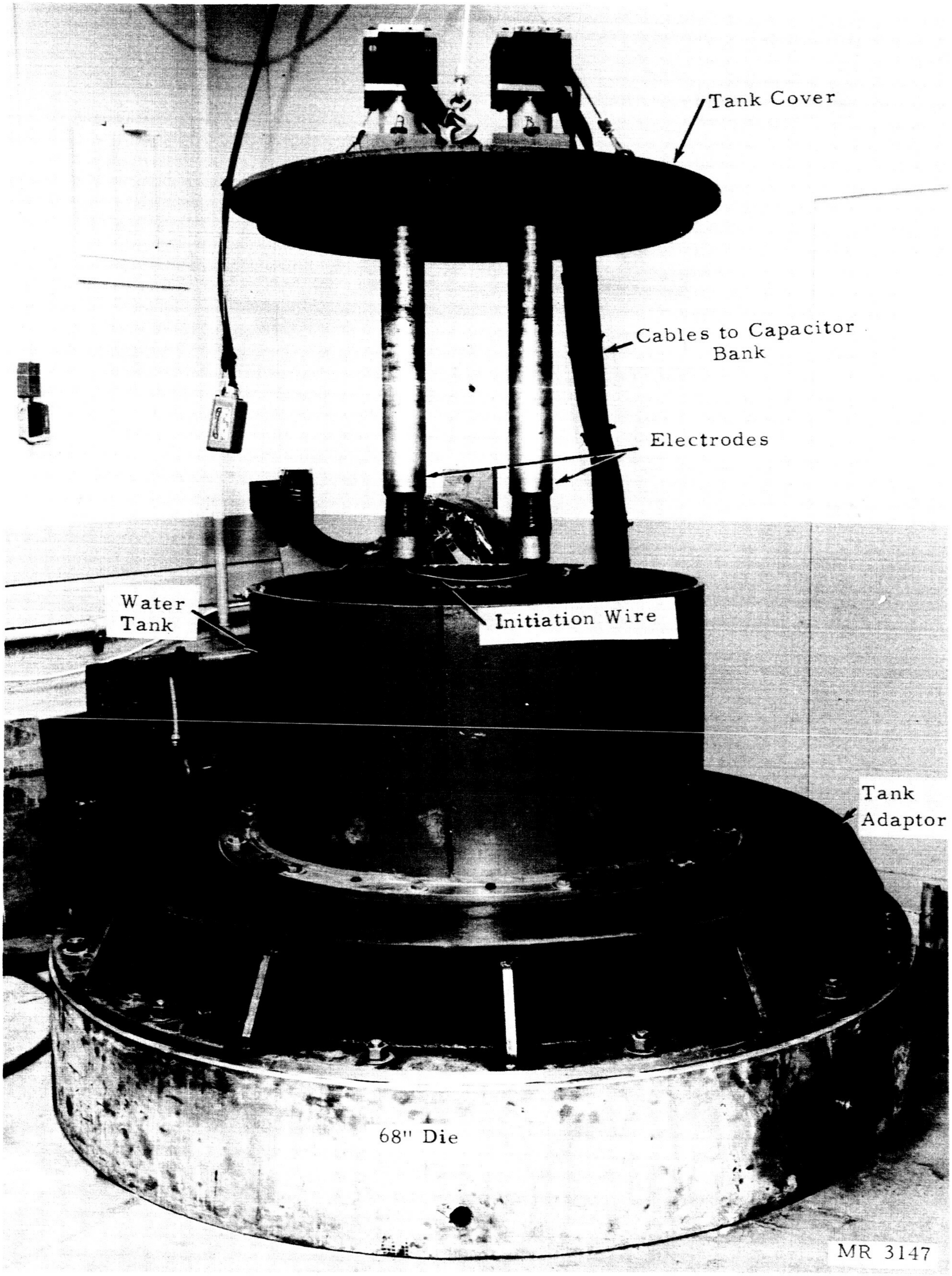

ARRANGEMENT OF ELECTRODES. TANK AND DIE

FIGURE 5

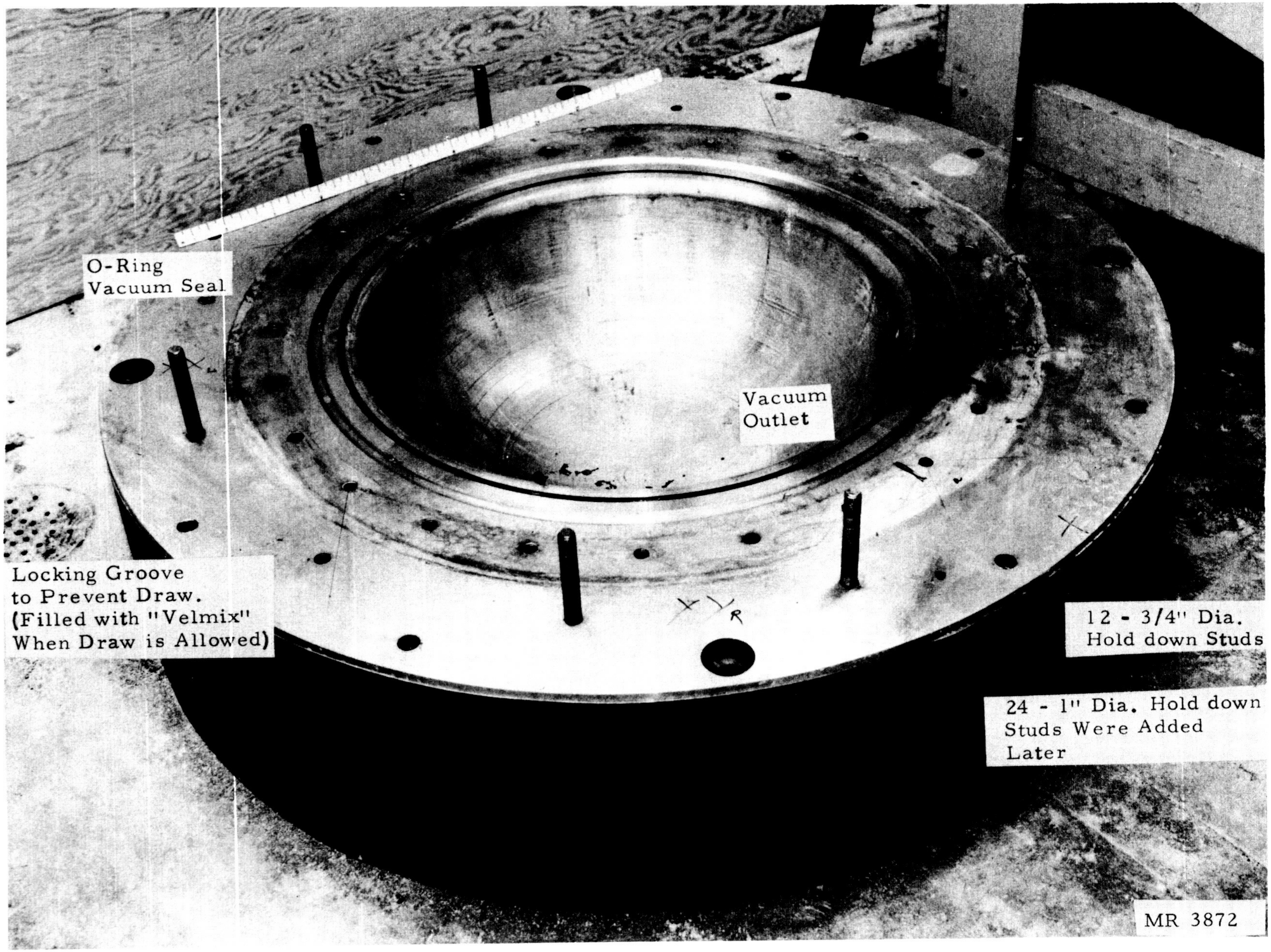

28" DIAMETER KIRKSITE DIE

FIGURE 6

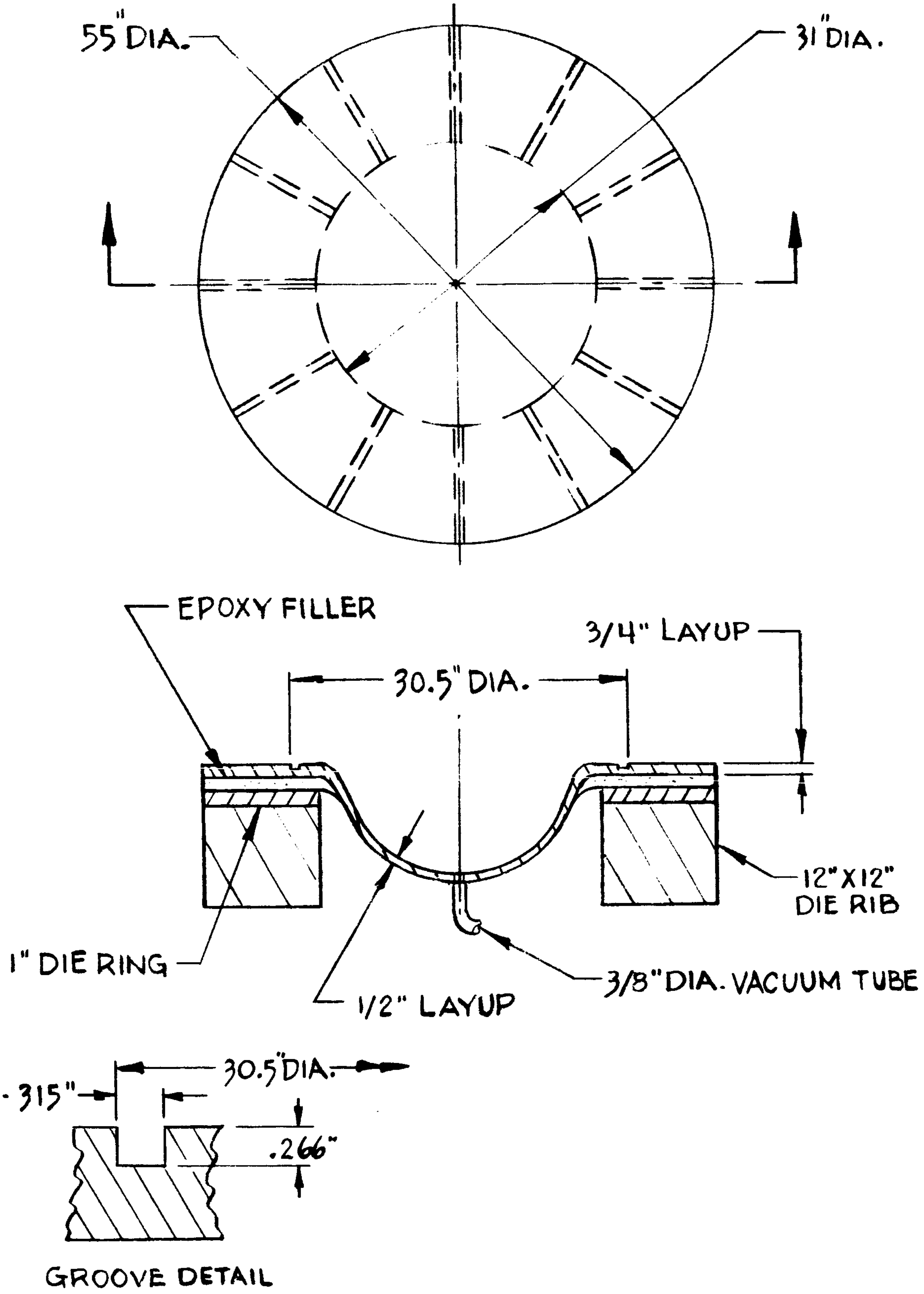

CONSTRUCTION OF 28" DIAMETER REINFORCED PLASTIC DIE

FIGURE 7

The number of EH discharges employed in forming the 28" bulkheads generally depended on the effectiveness of the flange draw control method. In the earlier experiments when control methods (later described) were being developed and frequent adjustments were necessary, as many as 18 discharges (see schedule in Figure 8) were employed until die contact at dome center (position 3 in the sketch) and several more discharges were required to form the spherical shape of (3) to ellipsoid die contour (4).

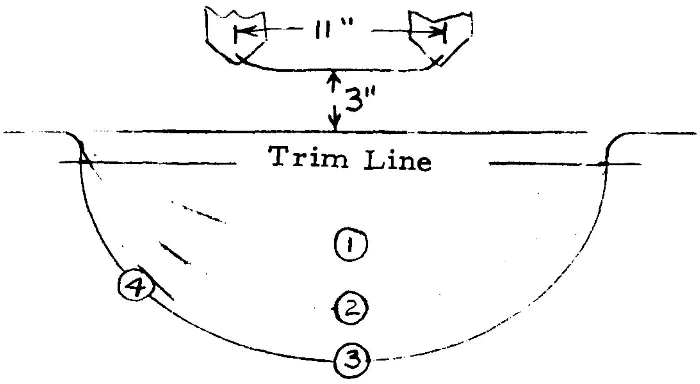

Most of the experiments were conducted with an 11" gap, and with the electrodes fixed 3" above the original blank position during the entire series of discharges. After each discharge the electrodes were rotated 45° to maintain uniformly spherical workpiece contour. In the later experiments (after development of effective draw control), parts were formed to die contour with as few as 12 discharges totaling 200,000 joules (960 uf bank) or 128,500 joules (240 uf bank). See Table 1.

Workpieces were coated with grease lubricant for most draw experiments and were notlubricated for stretch experiments.

Except for the initial stretch experiments which utilized a 36" diameter blank, all other blanks were 40" in diameter. The blank was usually prepared with a 1" x 1" center square and radius lines drawn in the transverse and longitudinal grain direction. These radial right angle lines were marked at 2" intervals for subsequent contour thickness measurements in the manner shown in Figure 9. The center square dimensions were

Shot #	KV	Depth (in)	Total Draw-in (in.)				Bolt Torque (Ft. Lbs.)												Remarks
			3	6	9	12	1	2	3	4	5	6	7	8	9	10	11	12	
1	4.0	4.51	.58	.64	.64	.75	25											25	
2	4.0	5.51		Not Measured			30	25								25	30	30	Increased at 1-11-12 because of greater draw at 12
3	4.0	6.13	1.26	1.55	1.35	1.30	10	0	0	0	10							10	Overall decrease due to "settling" of die
4	4.0	6.81	1.28	1.60	1.50	1.40	25											25	Draw-in greater than desired-increased all torque
5	4.0	7.20	1.30	1.85	1.75	1.57													
6	4.0	7.58	1.52	2.00	1.91	1.62	0	0	0	0	25							25	Torque decreased at 1-2-3-4 to permit draw in that area
7	4.0	7.79	1.92	2.20	1.93	1.82	0	0	0	0	25	30	30	30	30	30	25	25	Increased to remove wrinkles at 6-10 area
8	4.2	8.09	2.32	2.40	1.95	2.02													
9	4.4	8.50	2.62	2.97	1.98	2.08													
10	4.5	8.82	2.78	3.02	2.14	2.21	25	35	35	35	35	10	10	10	10	25	25	25	To reduce draw at 3&6 and allow draw at 9
11	4.5	9.03	2.90	3.10	2.30	2.60													
12	5.0	9.40	2.90	3.10	2.54	2.88	30	35	35	35	35	10	10	10	25	25	30	30	To reduce draw at 12 and 9
13	5.0	9.64	2.93	3.08	2.62	2.98	40											40	To reduce all draw to minimum
14	5.8	10.08	2.93	3.08	2.72	3.08													
15	6.0	10.50	3.02	3.12	3.04	3.83													
16	6.5	10.64	3.02	3.13	3.14	4.07	75											75	To stop all draw
17	7.0	10.71	3.02	3.14	3.34	4.27													
18	7.0	10.78	3.28	3.14	3.40	4.57													Draw-in still present at 12 due to very small flange

TOTAL ENERGY - 215,000 joules

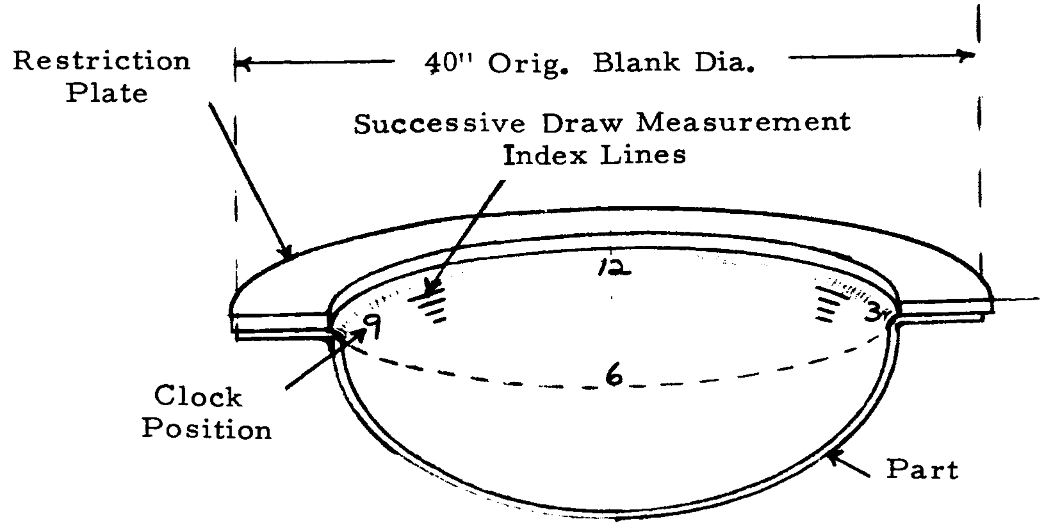

*Draw measured at die radius, see sketch

Experimental Conditions

960 uf capacitor bank

Electrode spacing - 11:

1/16" diameter Magnesium Initiation Wire

Specimen #40

TORQUE AND DRAW MEASUREMENTS
DURING FLANGE CONTROL
WITH SET SCREW PRESSURE
ON RESTRICTION PLATE
FIGURE 8

150

2

TABLE I

ELECTROHYDRAULIC FORMING RECORD

PART 28-62

Shot #	Discharge Voltage KV	Dome Depth inches	Total Draw, Inches Position 3	6	9	12	Average	Flange Pressure, PSI Position 3	6	9	12	Average
Vacuum		1.62										
1	9	5.05	.55	.80	.85	.75	.74	125	125	125	125	125
2	9.5	6.50	.93	1.49	1.18	.88	1.13	150	175	175	175	170
3	10	7.47	1.75	1.80	1.20	1.24	1.50	175	300	300	175	240
4	10	8.30	2.28	1.85	1.20	1.72	1.76	400	400	300	175	320
5	10	8.92	2.30	1.87	1.30	1.97	1.86	600	400	150	300	360
6	10	9.45	2.50	1.87	1.58	2.74	2.17	600	400	150	300	360
7	10	9.50	2.50	1.87	1.58	2.74	2.17	600	150	150	600	375
8	10	10.04	2.50	2.10	2.20	3.00	2.45	600	150	150	600	375
9	10	10.60	2.50	2.75	3.00	3.06	2.83	600	150	150	600	375
10	10	10.95	2.55	3.06	3.00	3.06	2.92	500	500	500	500	500
11	10	10.95	2.55	3.06	3.00	3.06	2.92	500	500	500	500	500

TOTAL 128,550 joules.

Experimental Conditions Specimen #62

.063" x 40" diameter 6061-0 blank

240 uf capacitor bank, (10 KV = 12,000 joules)

20" gap, 3" standoff

.06" magnesium exploding wire (except for Shot 7 which employed .09" wire and was rather ineffective)

Electrodes rotated 90° between discharges

Lubrication - light grease

Draw measured at die radius

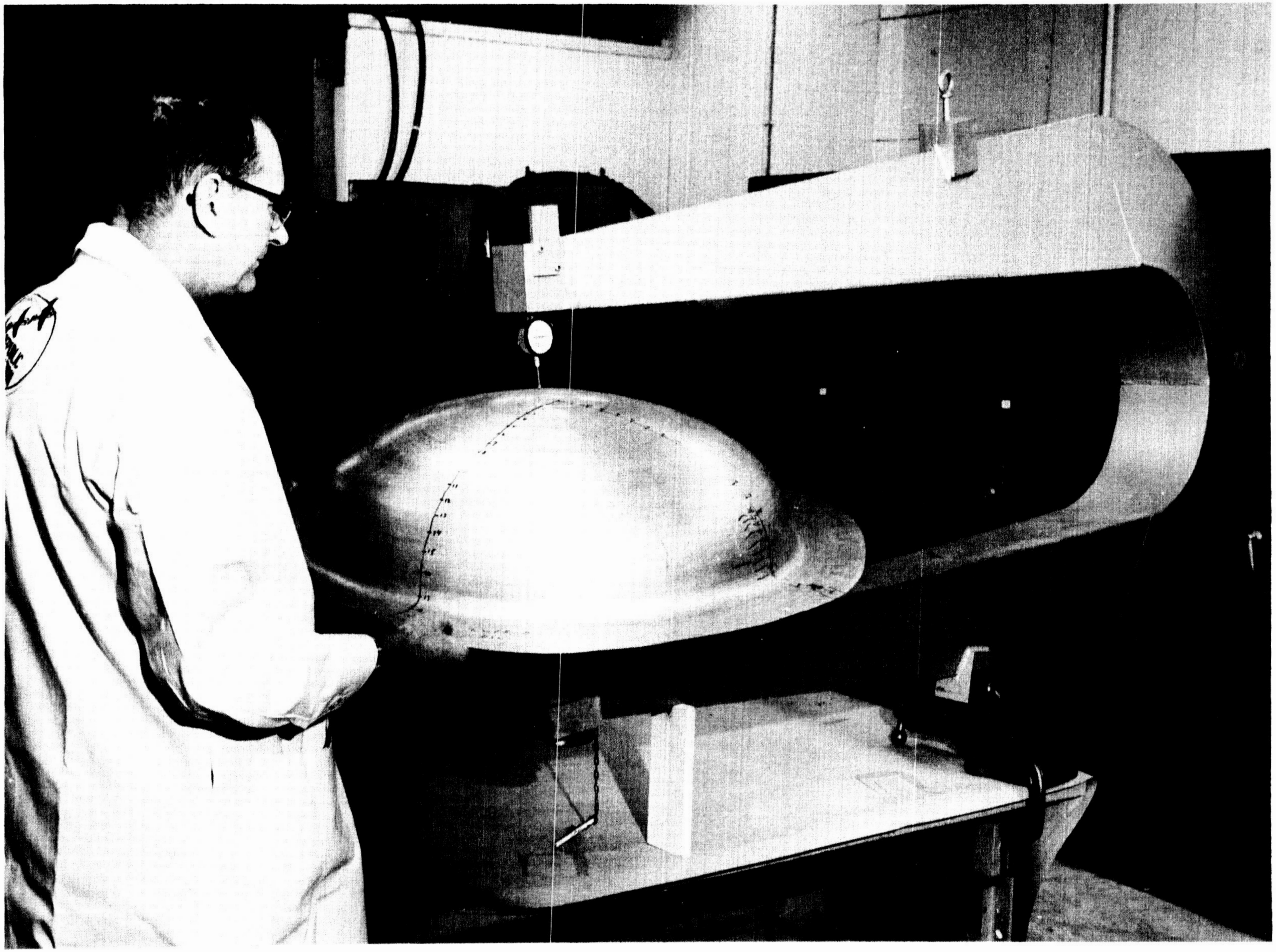

METHOD OF MEASURING THICKNESS GRADIENT OF 28" DOMES (MR3873)

FIGURE 9

periodically measured during forming in order to calculate the thickness of the square. The alloys used were 7075, 6061 and 2219, all 1/16" thick and mainly O temper.

2. EH Forming Experiments - 28" Bulkheads

Stretch forming experiments, in which a locking bead in the flange prevented draw was employed, were conducted to establish the dome depth which could be obtained. This work was of particular interest in establishing a method for fabricating domes of 105" and larger diameters with minimum allowance for flange width. Due to the limitations of current rolling mill equipment, as shown in Figure 10, it is apparent that the 140" to 144" width considered necessary for drawing forming is not available in the thin gages from which .050" bulkheads would be produced.

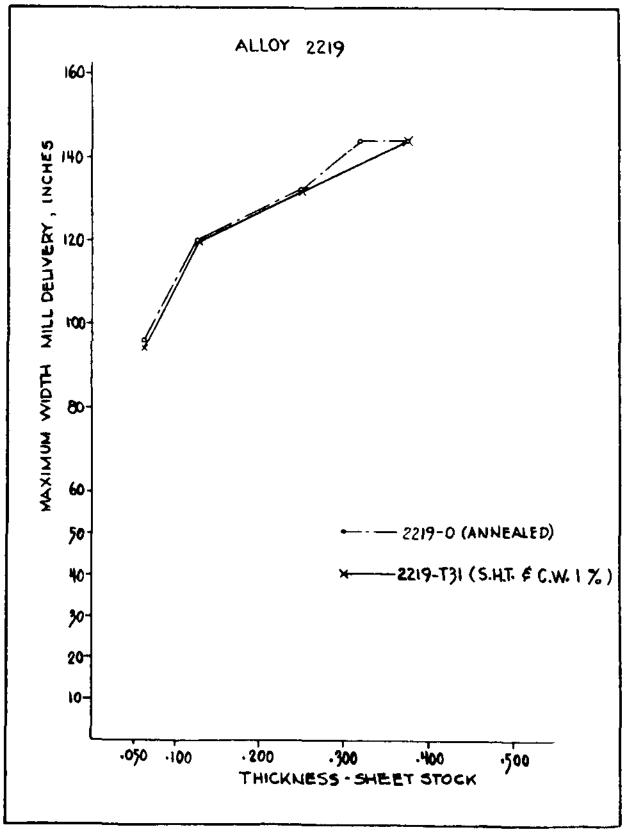

ALUMINUM WIDE SHEET AVAILABILITY
FIGURE 10

Stretch forming experiments with several annealing stages were conducted with six 28" domes. With annealing, thinout up to 50% was obtainable (compared to 25% without annealing). However, as can be seen in Figure 11, thinout at the dome center becomes progressively more pro-

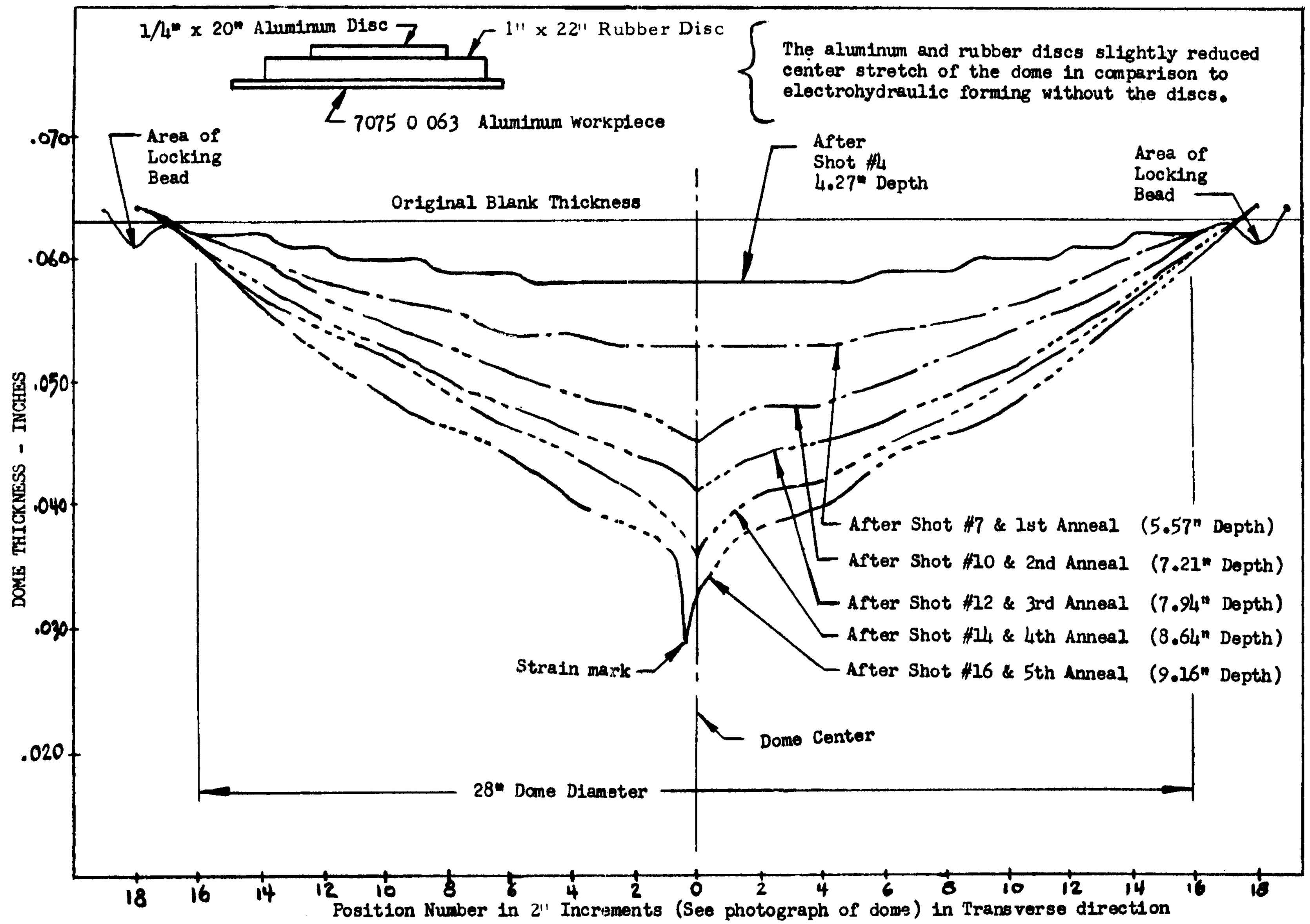

SPECIMEN 8
THICKNESS PROFILE AT SEVERAL STAGES OF STRETCH FORMING

FIGURE 11

nounced since annealing eliminates the compensating higher strain hardness of the thinner region. The maximum dome depth which was obtainable was 9.19", which is about 1.6" short of the 10.8" die depth. The graph at the left shows that, in terms of the required 1.4:1 ellipsoid, this represents a contour completion, on a surface area basis of 66%. A photograph of a stretch formed part and a record of the EH forming and annealing employed are shown in Figure 12.

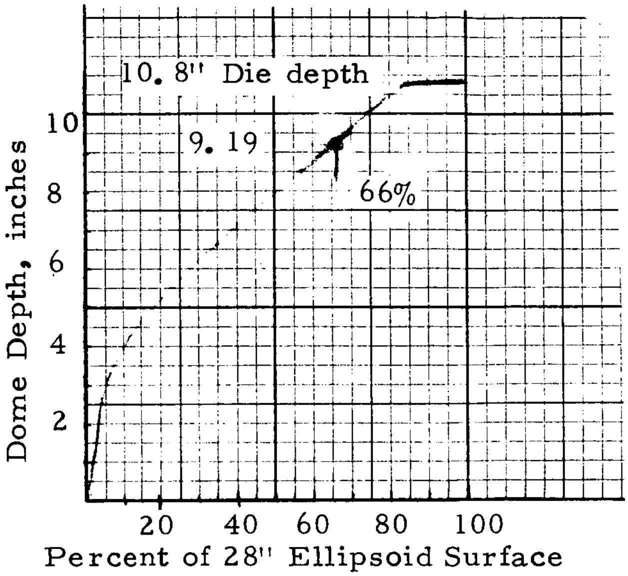

<u>Inverse Punches</u> such as shown in the sketch below were employed to initially obtain greater stretching in the outer region. Three experiments were conducted with inverted punches to concentrate the stretch during the first EH discharges in an annular ring of about 12 to 20" diameter.

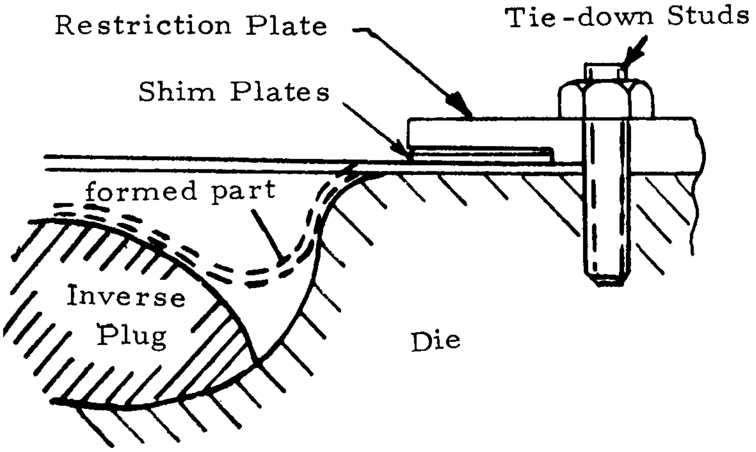

Figure 13 shows a part with the inverted dish shape which is subsequently reversed to obtain ellipsoid dome shape. A comparison between Figures 11 and 14 shows that stretch is considerably more uniform than in stretch forming without the inverse plugs. However, the greater time involved in

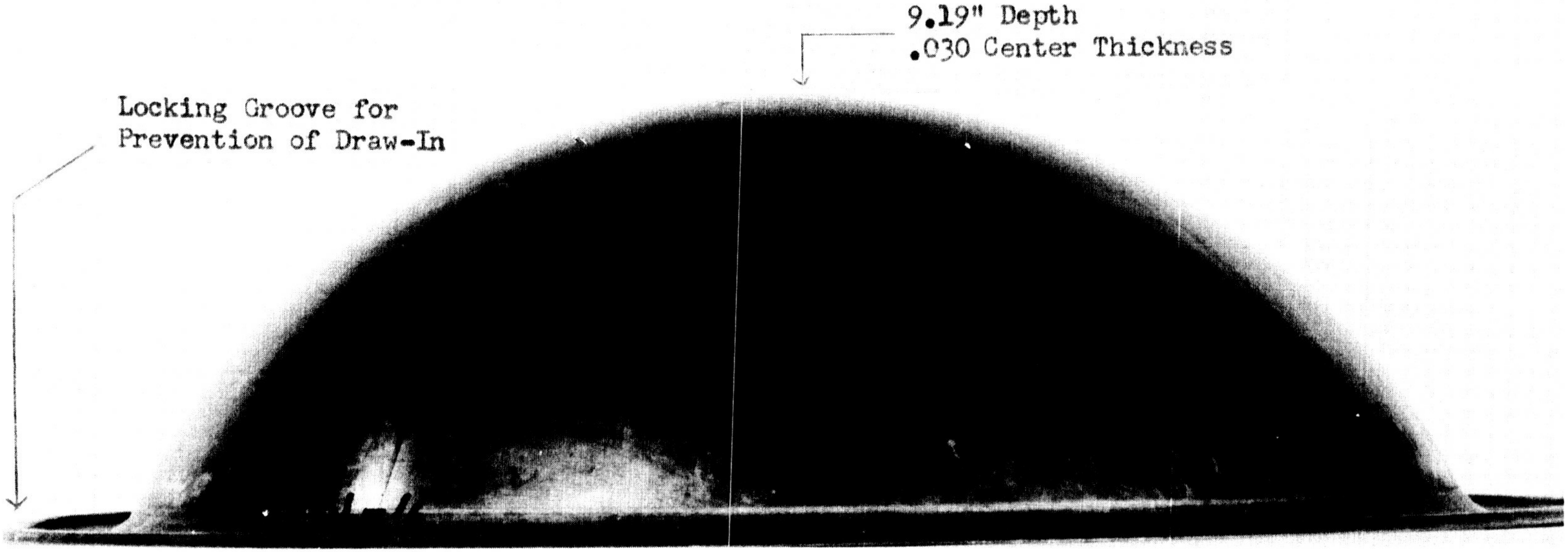

Shot #	KV	Joules	Depth (in)
1	3.5	5,880	2.11
2	4.0	7,680	3.11
3	4.5	9,720	3.77
4	5.0	12,000	4.27
	First Anneal		
5	5.5	14,520	4.87
6	6.5	20,280	5.17
7	7.0	23,520	5.57
	Second Anneal		
8	7.5	27,000	6.10
9	7.5	27,000	6.47
10	8.0	30,720	7.21
	Third Anneal		

Shot #	KV	Joules	Depth (in)
11	7.0	23,520	7.51
12	7.0	23,520	7.80
	Fourth Anneal		
13	7.0	23,520	8.42
14	6.0	17,280	8.64
	Fifth Anneal		
15	6.0	17,280	8.94
16	6.0	17,280	9.19

SPECIMEN 8
EH FORMING AND ANNEALING RECORD DURING STRETCH FORMING

FIGURE 12

SHAPE OF SPECIMEN 14 AFTER 6 STRETCH FORMING DISCHARGES AGAINST AN INVERTED PUNCH

FIGURE 13

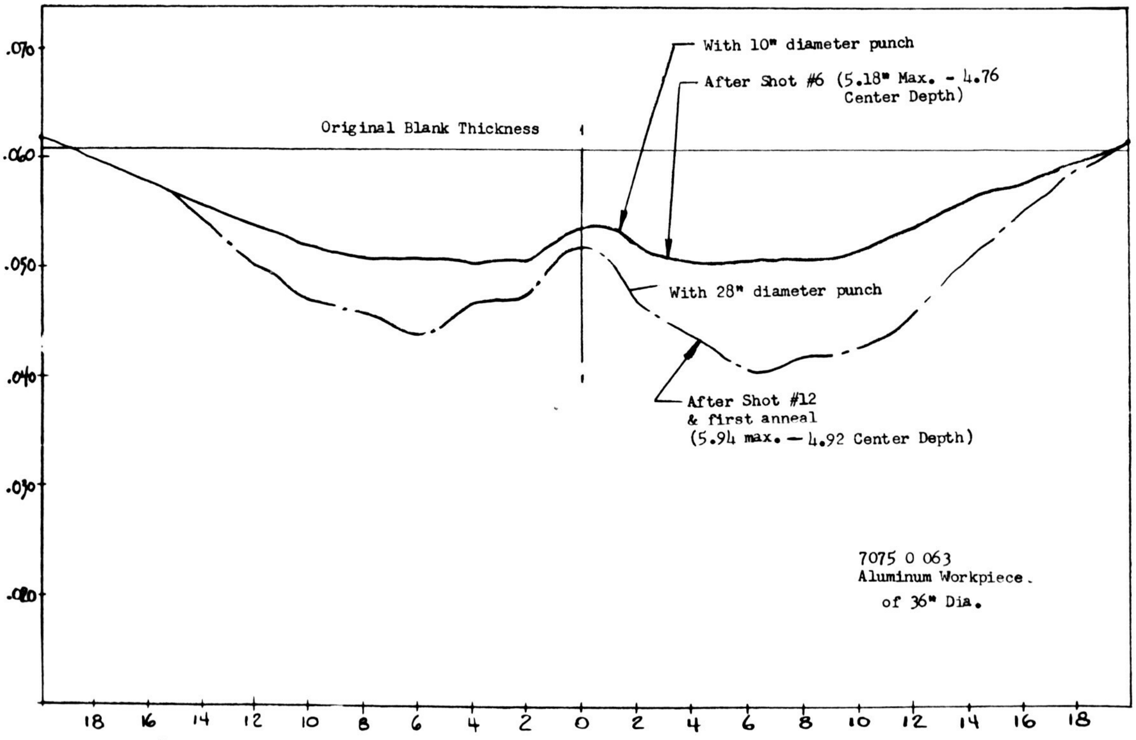

THICKNESS PROFILE OF SPECIMEN 14
STRETCH FORMED WITH INVERTED PUNCHES
FIGURE 14

workpiece-repositioning to permit punch changes outweighs the improvement in thinout variation.

It is interesting to note that the inverse punch method has an inherent advantage that did not become apparent until the draw experiments (described below) were begun. Namely, the punch stabilizes the blank against nonuniform draw since the workpiece does not shift with respect to the inverse punch.

Draw forming experiments were begun with the inverse punch method. This produced satisfactory contour with less thinout, (17% at dome center, see thinout gradient marked on dome, (Figure 15) than obtained in subsequent draw forming with the inverse punch.

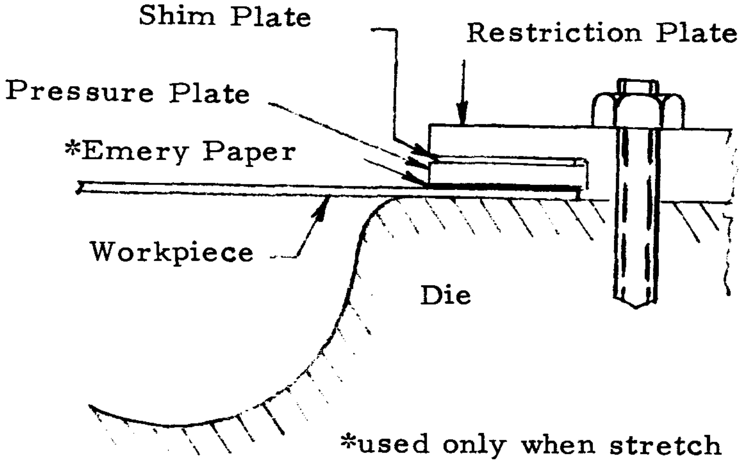

*used only when stretch rather than draw, was desired

The first experiments without the inverse punch could not be completed since draw was quite nonuniform. Shim plates (see sketch) of varying thickness were then employed to increase restriction in regions where draw was excessive. Still, draw could not be uniformly controlled. Consequently, a change was made in flange restriction from the relatively indeterminate and nonuniform pressure of various shim plate thickness to the more controllable application of flange pressure shown in the upper sketch on page 25. This metal bladder concept would seem to be an optimum method of producing a uniform flange restraint. However, several unsuccessful experiments demonstrated that, despite lubrication and good centralization of the 40" blank diameter over the 28" die, draw was still nonuniform. Undoubtedly, a

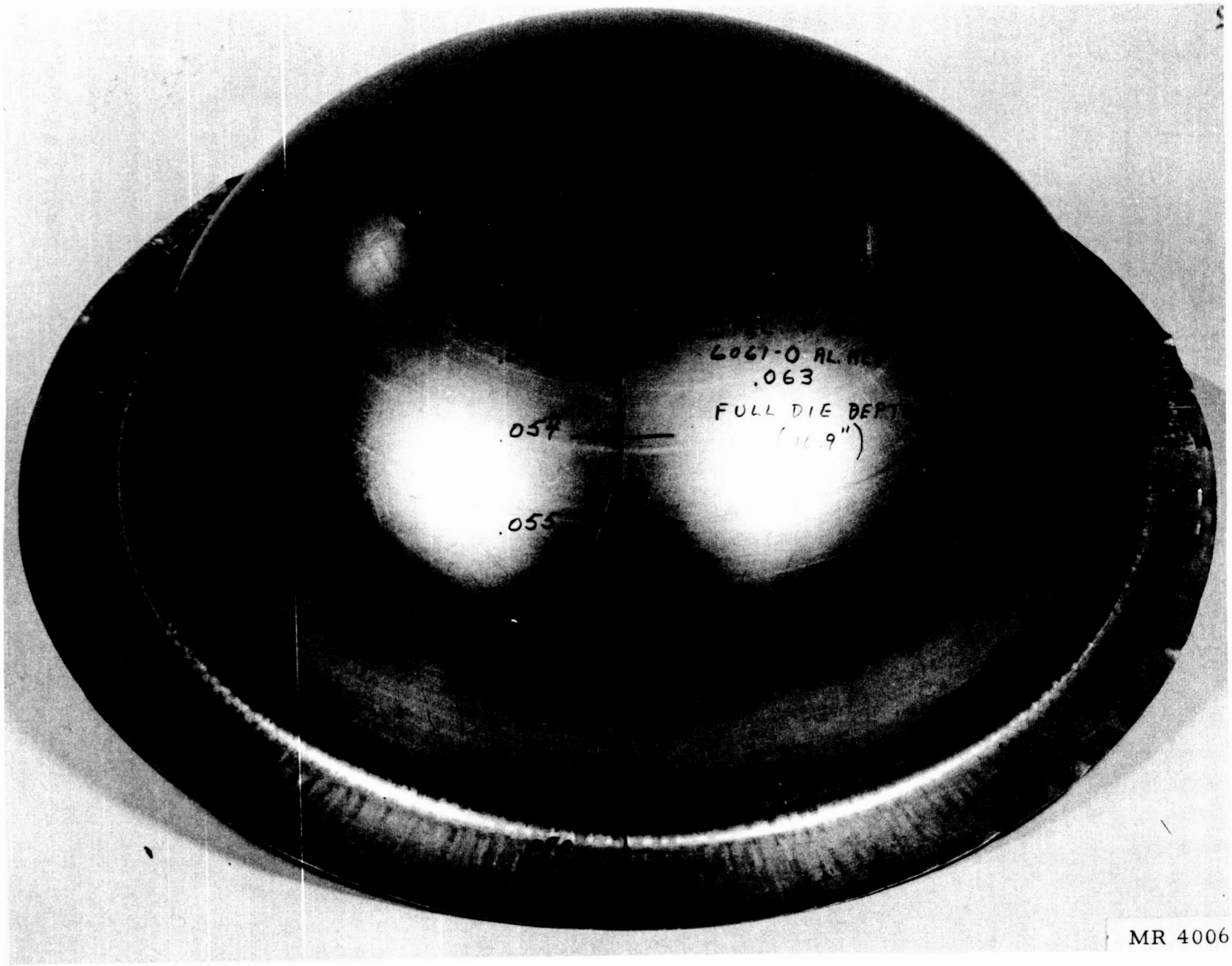

Note the small flange which is adequate for draw control in this method since much of the draw occurs with the stabilizing effect of the inverted plugs. Also note that the flange width is quite constant indicating uniform draw.

TYPICAL DOME FORMED BY THE INVERSE PLUG AND DRAW METHOD

FIGURE 15

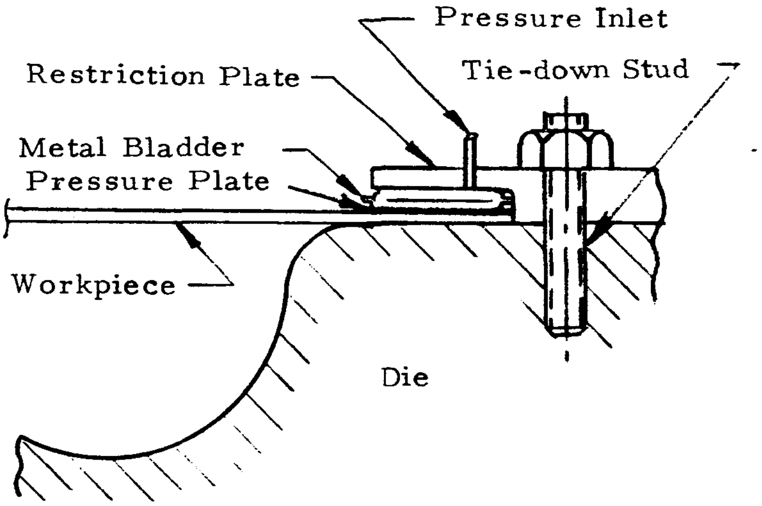

larger blank diameter would have produced more uniform draw, but the thinout at dome center was sufficiently close to fracture (27%, as compared to 17% for the inverse plug-draw method) to preclude the use of larger blank diameters. It was possible to produce satisfactory bulkheads by forming to a depth of only 8" with the metal bladder flange control, then returning to shim plate restriction with emery paper in localized positions on the flange, and finally forming to full die depth of 10.8" by halting draw altogether with emery paper.

The above procedure demonstrated that localized flange control was required. Accordingly, as the sketch indicates, set screws were added to permit adjustment of the restriction plate pressure as indicated by draw measurements. It was necessary

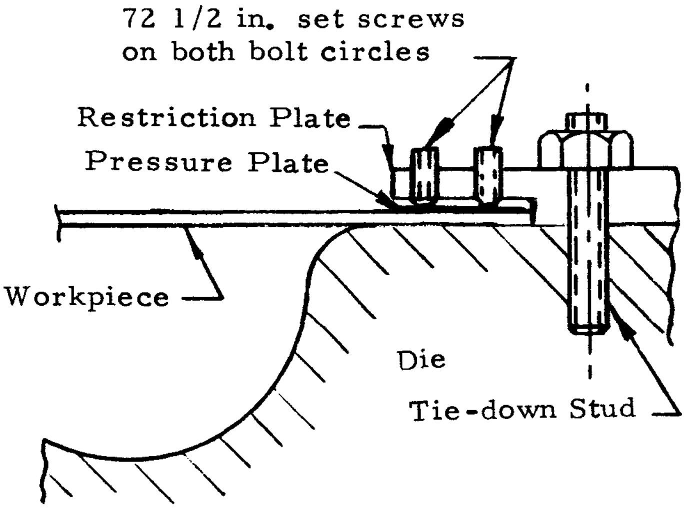

to sand blast the restriction plate to increase friction and thereby obtain sufficient restraint with the maximum torque (125 ft. lbs.) which could be applied. This set screw method of flange control was satisfactory in that control of draw was good, both as to amount and symmetry, but adjustment of set screw torque was necessary for nearly every EH discharge. This was tedious, particularly since the cloudiness of the water from the suspended particles of the vaporized wire generally required lowering the water level so that the screws could be seen for adjustment.

Accordingly, it was decided to return to the pressure bladder concept of flange control. Calculations, see Appendix A, indicate that flange pressures up to 725 psi would be required. Consequently, 24 1" bolts were added to the 12-3/4" tie-down studs. Three domes were formed with flange pressures up to 1100 psi which could fully restrain the part. Despite these higher pressures draw was still nonuniform, causing flange wrinkles which subsequently were drawn into the contour. It was concluded that a wrinkle-free part could not be formed with uniform flange pressure.

Consequently, a four sectional bladder was (see Figure 16) constructed to permit individual pressure control of each of the four sections. Pressures were controlled by a system of pressure and bleed valves. The first specimen (#50) formed by this method conclusively indicated that sectional control was the best approach. This technique was later employed with eight segments in forming 57" domes. At that time refinements such as lubricant application and avoiding pressures under 100 psi to prevent flange wrinkling, were introduced.

During the course of the experiments, curves such as shown in Figures 17 and 18 were plotted. Based on a number of dome experiments, a "normal" or desirable curve between depth and draw (as measured at the die radius) to obtain a wrinkle-free part with minimum thinout gradient is shown in Figure 18. Some deviation during the forming discharges is of course tolerable (and unavoidable even with the improved control of a sectionalized bladder), but it is useful to use the desired depth-draw curve as a guide for pressure changes between discharges. As the arrows, and comments on thickness and contour wrinkles, in Figure 17 indicate, curves to the left of the group can be expected to rupture or have excess thinout, whereas curves to the right of the group will have severe buckles or wrinkles in the contour area several inches below the trim line.

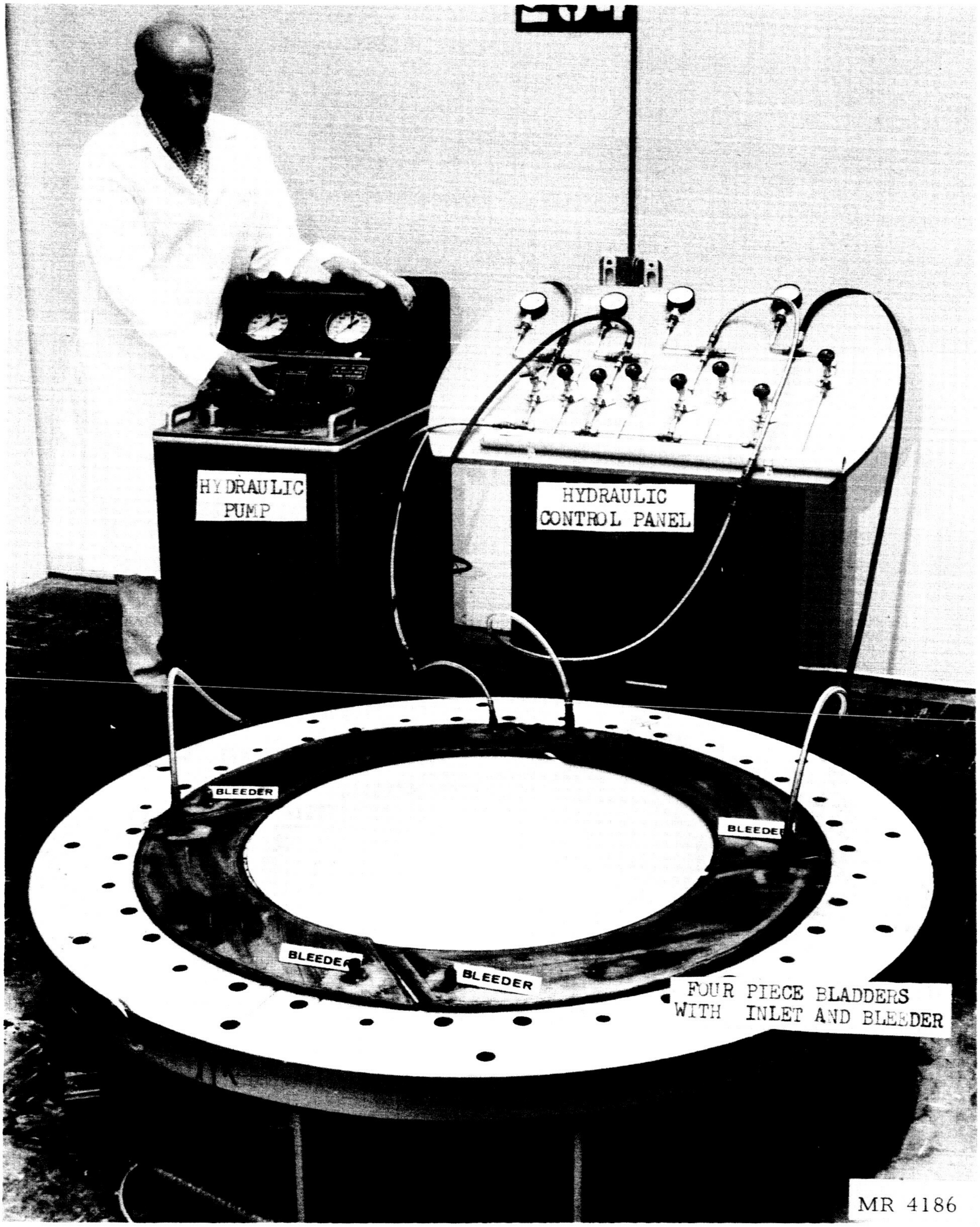

HYDRAULIC SYSTEM AND SECTIONAL BLADDERS FOR FLANGE CONTROL SHOWN ON 28" PLASTIC DIE

FIGURE 16

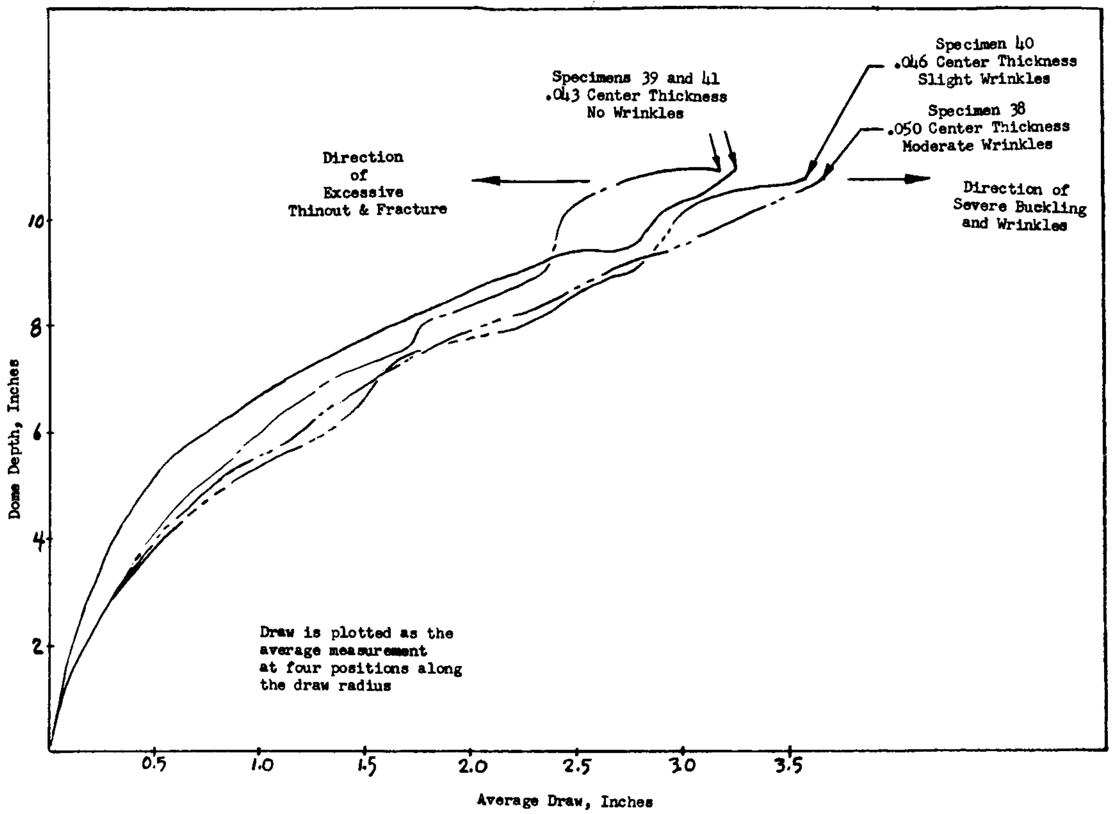

DEPTH VERSUS DRAW - 28" DOME SPECIMENS
FORMED WITH SET SCREW CONTROL OF FLANGE PRESSURE

FIGURE 17

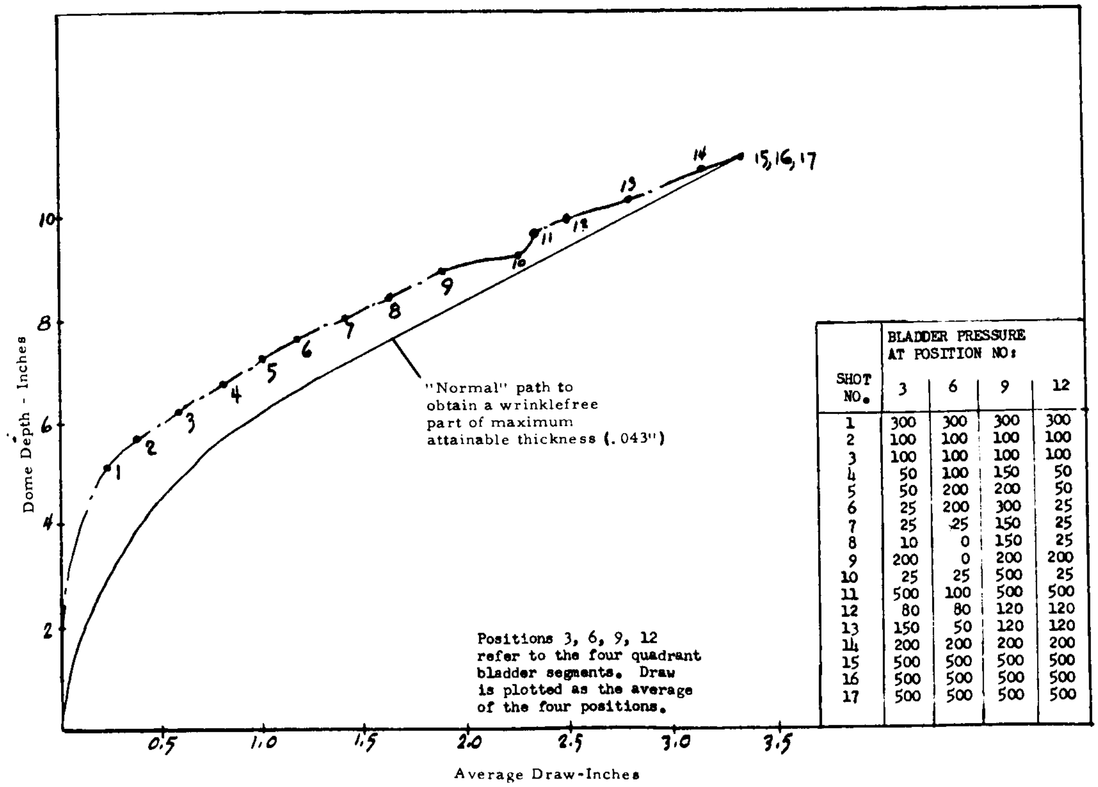

SHOT NO.	BLADDER PRESSURE AT POSITION NO: 3	6	9	12
1	300	300	300	300
2	100	100	100	100
3	100	100	100	100
4	50	100	150	50
5	50	200	200	50
6	25	200	300	25
7	25	25	150	25
8	10	0	150	25
9	200	0	200	200
10	25	25	500	25
11	500	100	500	500
12	80	80	120	120
13	150	50	120	120
14	200	200	200	200
15	500	500	500	500
16	500	500	500	500
17	500	500	500	500

DEPTH VERSUS DRAW - 28" DOME SPECIMEN #50
FORMED WITH LOCALIZED BLADDER FLANGE CONTROL

FIGURE 18

SECTION III

PHASE II - FABRICATION OF 57" BULKHEADS

A. EXPERIMENTAL APPROACH

Selection of Die Diameter - The difference between part and die diameter of the 28" domes (formed by the EH process) is shown in the table below.

28" DOME PERIPHERY TAPE O.D. MEASUREMENTS

Kirksite Die

Spec. #	Alloy	O.D.	Average	Die I.D.	Average Difference from Die
39	6061-0	28.105	28.084"	28.109"	.025"
41	6061-0	28.100			
43	6061-0	28.085			
46	6061-0	28.056			
50	6061-0	28.085			
59	6061-T4	28.075			

Epoxy Die

Spec. #	Alloy	O.D.	Average	Die I D.	Average Difference from Die
48	6061-0	28.092	28.092	28.127"	.035"
56	6061-0	28.084			
58	6061-T4	28.088			
60	2219-T3	28.090			
62	2219-0	28.108			

Note: 1. All O.D measurements were taken on a flat surface table with the periphery tape spaced 1" above the part flange by means of wooden blocks to assure "Squareness".

2. Both dies were measured with a Brown & Sharp inside micrometer at 4 equally spaced points on the die. (4 readings averaged for the above value).

Since the variation of the difference from part to part is rather large (.004 to .053" for kirksite die and .019" to .043" for the epoxy die) it seemed likely that the difference was not necessarily springback but that may have been failure to completely contact the die contour. For this reason, the die diameter was selected as only .015" above the 57" nominal, namely 57.015 ± .010".

Selection of Die Construction - Based on satisfactory performance of the 28-inch epoxy shell die in EH forming of eight domes without damage (deformation, crazing, delamination, etc.), it was decided to employ the epoxy shell construction for the 57-inch bulkheads. The epoxy shell die cost is about 50% of the cost of cast, machined kirksite or meehanite dies.

The 57-inch epoxy shell proved satisfactory in that only minor repairs (due to porosity below the surface) were required. However, difficulty was experienced in that the epoxy shell flange deformed due to insufficient strength in the welds of the steel cradle which supported the epoxy flange. This required two corrections; 1) welding of the entire cradle seams over the original tack weld constructions and 2) addition of a 1-inch steel face plate over the epoxy flange which was out of plane due to inadequate support. These corrections prevented flange wrinkling. Thereafter, flange control was effective and the forming of 57-inch domes #15 through #27 was straightforward except for some sealing difficulties.

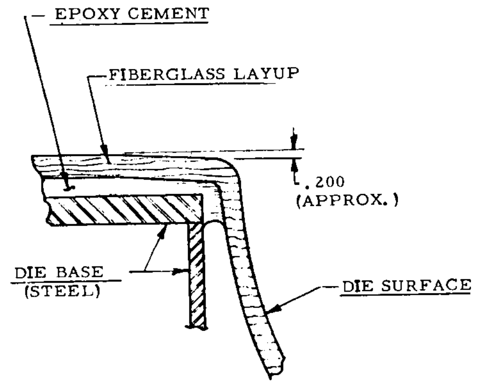

DEFORMED CONDITION

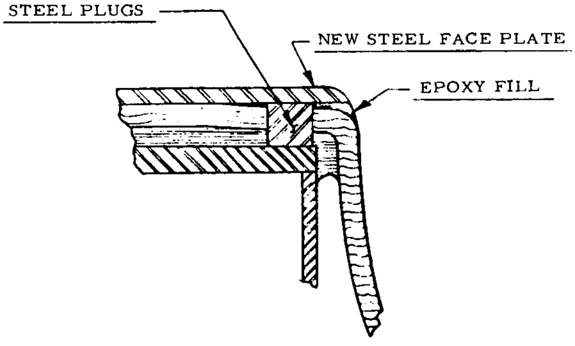

CORRECTION

Selected Fabrication Procedure - The table below compares the fabrication procedure selected based on Phase I results with 28-inch dome experiments and the procedure actually employed to produce 57-inch bulkheads to the requirements of drawing number 18-A-2-701.

PROCEDURE ORIGINALLY INTENDED	PROCEDURE FOUND BEST
EH Controlled Draw Forming	HF with Controlled Draw
Epoxy Laminate Die	Epoxy Laminate Die with Steel Face
Segmented Bladder Flange Control	Segmented Bladder Flange Control
Minimum Size Blank in .080" Thickness	080" x 84" Diameter Blank
Form in O Condition to 1/4" of Die Contour	Form in O Condition to Die Contour
Solution Treat and Finish Form	Selectively Chem Mill to Uniform Thickness
Artificially (Furnace) Age	Solution Treat and Size
Selectively Chem Mill to Min. Thickness Variation	Artificially Age

A detailed description of the best fabrication procedure follows:

1. Anneal .080" 2219 material and cut a workpiece of 84" diameter.
2. Apply a light coat of grease to both surfaces of the workpiece except for an outer border of 7". The grease provides lubrication and prevents corrosion. The dry outer border increases flange restraint without requiring rather high flange pressures which approach the strength of the tooling. Draw scratches which occur due to lack of lubrication of the outer 7" are still outside the trim line of the contour upon completion of the draw forming.
3. Gradually increase forming pressure upon the workpiece contour from 40 psi to 260 psi while selectively changing flange restraint in each of eight radial zones by applying flange pressures of 150 to 500 psi. The flange pressure changes were regulated to have the observed draw-depth measurements (plotted for each of the eight zones) conform closely to a "normal" draw-depth curve. Ten successive measurements were generally made. Table 2 records the typical changes made in flange pressure to compensate for observed draw, and Figure 19 compares the draw-depth curves of a number of 57" domes with the curve considered "normal" on the basis of 28" dome forming experiments.
4. About midway through the forming process it was found desirable to release both forming and flange pressures and to lift up the flange pressure plate. This procedure was a refinement which reduced the problem of maintaining a forming pressure seal against the moving flange metal which tended to drag the seal. The release of the seal permitted it to re-expand to its original diameter. If necessary, lubrication (friction) changes could be made at this time dependent on whether the prior stretch relationship had been within the typical range.
5. After forming, measurements were made of thickness, contour and diameter.
6. Partially immerse the formed dome in the chem mill bath. Rotate and vertically adjust the part to selectively reduce the

TABLE 2

HYDRAULIC FORMING RECORD

PART 57-27

Reading Number	Total Dome Depth inches	* Forming Pressure psi	BLADDER PRESSURE, psi and FLANGE DRAW,** inches								
			1	2	3	4	5	6	7	8	Average
1	5.40	35	160	160	160	160	160	160	160	160	160
			.48	.45	.35	.34	.30	.34	.40	.45	.39
2	7.60	50	220	220	200	200	200	200	200	200	205
			.70	.72	.64	.65	.62	.66	.72	.70	.67
3	8.70	60	260	300	240	240	240	240	300	260	252
			.78	.86	.78	.74	.80	.84	.80	.82	.81
4	10.10	75	260	300	300	300	300	300	300	300	295
			1.05	1.10	1.00	1.00	.94	1.00	1.00	1.10	1.02
5	12.00	90	300	300	260	260	300	300	260	300	285
			1.32	1.40	1.40	1.40	1.36	1.45	1.45	1.40	1.39
6	13.80	100	340	380	280	340	280	280	300	290	311
			1.76	2.00	1.98	1.90	1.80	1.76	1.65	1.76	1.83
7	15.50	110	340	450	420	340	280	260	240	280	326
			2.08	2.08	2.40	2.20	2.60	2.35	2.30	2.20	2.27
8	18.10	120	250	350	350	320	300	350	350	300	321
			2.95	3.38	3.34	3.44	3.40	3.24	3.05	2.95	3.22
9	21.00	130	300	440	450	320	280	280	300	300	333
			4.45	4.50	4.40	4.35	4.15	4.15	4.22	4.40	4.33
10	22.40	250	400	420	400	400	380	340	500	400	410
			4.94	4.78	6.08	6.10	5.40	4.76	4.30	4.50	5.10

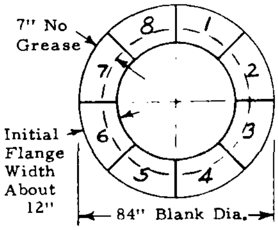

---

* 24 psi vacuum employed under workpiece to increase forming force.

** radial reduction of the original 84" blank diameter thickness. Check thickness readings with vidigage. This operation changed dimensional range from .052 to .054" at dome center and .078 to .080" at the trim line to the .050 to .058" range.

7. Solution treat and quench without fixturing or restraining the workpiece (890°F, 1 hour, cold water quench). After quenching, the contour distortion from template of most of the parts was less than .1 to .2". Two parts, however, had maximum deviations of about .5"

8. Return to the die for hydraulic sizing. After this operation 6 out of 9 parts were within .06" of nominal contour and three had maximum deviations of .13".

9. Aging was performed at 375°F ± 10° F for 36 hours. During this process the flange was bolted at the plate to preclude damage in handling. The diameter increased about .060" during aging to a 57.030" dimension.

10 The flange was trimmed off 1/2" above the ellipsoid equator trim line with a 1/8" diameter router bit.

A group of domes completed by the above series of operations is shown in Figure 26.

B. ELECTROHYDRAULIC FORMING 57-INCH BULKHEAD

1. Equipment, Tooling, Procedure

The 960 uf capacitor bank described on page 10 was employed for the first seven 57-inch bulkhead experiments which employed EH forming. Approximately 65 discharges totaling about 3,000,000 joules were required for the dome center to contact the die and another 30 discharges totaling about 2,000,000 joules were required for the balance of the workpiece to be brought to the ellipsoid die contour. This total of 5,000,000 joules compares with about 200,000 joules required for forming the 28-inch domes with the 960 uf capacitor bank. For equal workpiece thickness, the mechanical (strain) work to form a 57-inch dome is about four times the work to form a 28-inch dome since work is based on area. Based on calculations in Appendix D for static forming of bulkheads, the above values of 200,000 joules for 28-inch bulkheads and 5,000,000 joules for 57-inch bulkheads correspond to efficiencies of electrical energy conversion to mechanical work of 36% for the 28-inch bulkheads and only 8% for the 57-inch bulkheads.

An epoxy die as per drawing (fold-out, Figure 20) and a water tank as per drawing (fold-out, Figure 21) were employed. The electrodes previously used for the 28-inch domes were remounted in a cover large enough for the 57-inch water tank. The die, water tank and electrodes are shown with a completed dome in Figure 22.

Although six parts (57-1 to 57-6) were formed by the EH process, in retrospect only the first two can be considered significant since the difficulties experienced with flange control and flange wrinkling can only be explained in terms of progressive yielding of the supporting die structure after a rather high flange pressure (700 psi) was employed in the later stages of forming 57-2. The progressive yielding deflected the workpiece face but was not immediately detected since it occurred mainly under forming load and therefore could not be measured. In addition, although malfunctioning of the tooling was apparent, the difficulty described above, which was the main problem, was obscured by the fact that it permitted flange (rather than contour) wrinkling and these wrinkles in turn bent the pressure plates above them. It was therefore not until EH experiments had been discarded and several pressure plates had been replaced that the main problem with the die support structure was correctly diagnosed.

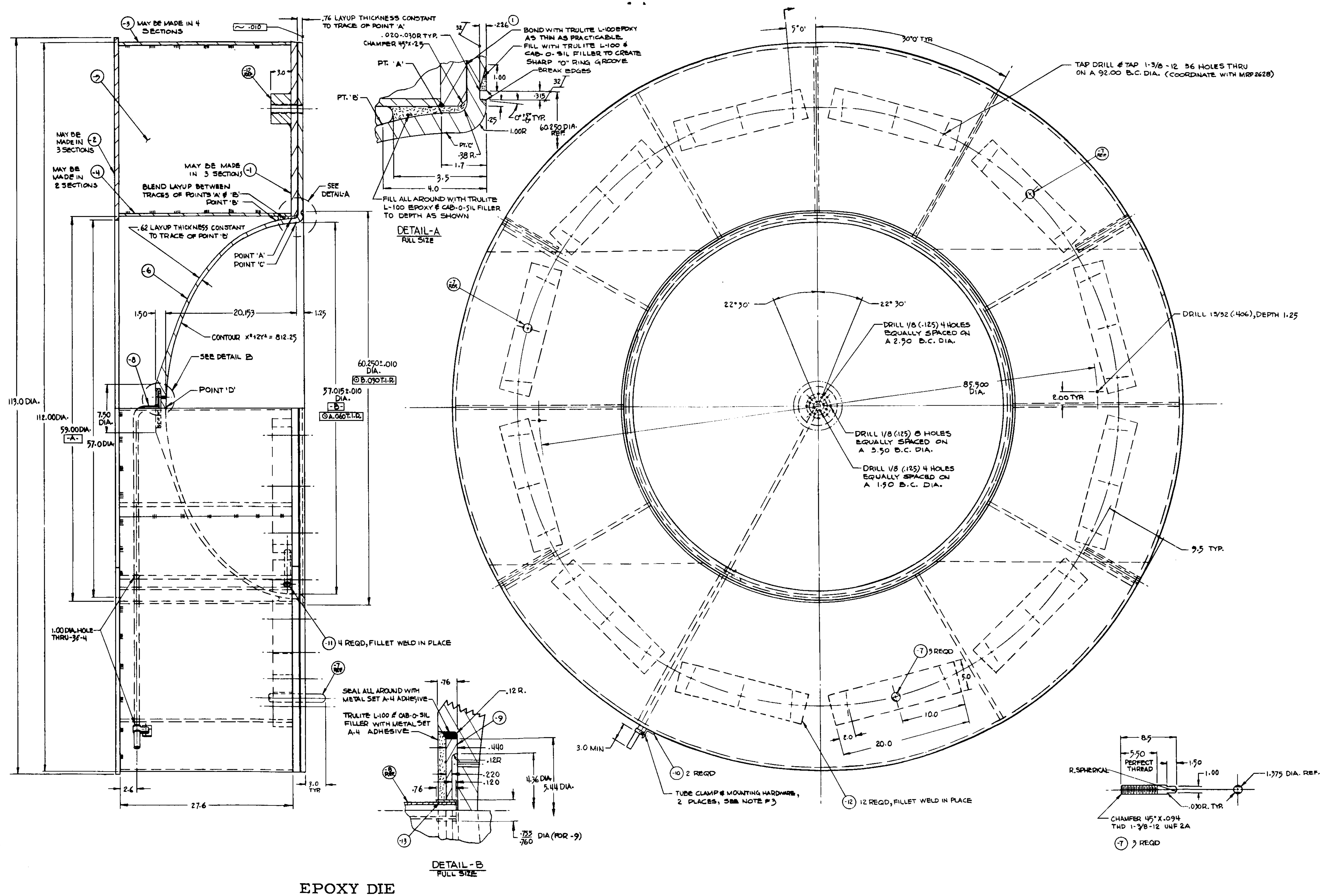

NOTES

ADDITIONAL REQUIREMENTS UNLESS OTHERWISE NOTED

(1) ALL-OVER MAXIMUM ROUGHNESS IN MICRO-INCHES PER SYMBOL HEREWITH. $\sqrt[125]{}$

(2) BREAK ALL SHARP UNNECESSARY EDGES.

(3) LOCATION AND SIZE OF PINS, SCREWS AND BOLTS TO BE DETERMINED BY TOOLMAKER.

(4) SURFACE MARKED ⊙A .060 T.I.R. SHALL BE CONCENTRIC WITH SURFACE MARKED -A- WITHIN .060 TOTAL INDICATOR READING.

(5) SURFACE MARKED ⊙B .030 T.I.R. SHALL BE CONCENTRIC WITH SURFACE MARKED -B- WITHIN .030 TOTAL INDICATOR READING.

(6) SURFACE MARKED ~ .010 SHALL BE FLAT WITHIN .010.

(7) -8, -9 & -13 TO BE WELDED TOGETHER & TO BE INSPECTED TO ASSURE NO LEAKAGE AT JOINTS.

✓	TRULITE L-100	EPOXY
✓	A-4	ADHESIVE
✓	CAB-O-SIL	FILLER

MRP 2621

SHEET 1 OF 1

T D REV

NO. REQ. PER UNIT	PART NO.	NAME	DIA	THICK	WIDTH	LENGTH	MATERIAL
1	-13	SLEEVE	.750	.049		6.8	STAINLESS STL TUBE
12	-12	BOLT RETAINER		3.0	5.0	20.0	4130 STL PLATE
4	-11	LIFTING LUG	1.25			9.5	STL PIPE
1	-10	SUPPORT					1.5X1.5X.54 STL. ANG.
1	-9	VACUUM MANIFOLD		0.5	5.5	5.5	MIL-S-6121 STL PLATE
1	-8	TUBE	1.625	.095		65.0	STAINLESS STL TUBE
3	-7	GUIDE	1.375			8.5	TOOL STL
1	-6	DIE					STYLE 164 FIBREGLASS
12	-5	WEB		0.5	26.0	27.7	H.R.S.
1	-4	WALL INNER		.375	27.7	167.0	H.R.S.
1	-3	WALL OUTER		.375	27.7	370.0	H.R.S.
1	-2	BASE LOWER		0.5	113.5	113.5	H.R.S.
1	-1	BASE UPPER		1.0	112.5	112.5	H.R.S.

DO NOT SCALE DRAWING

DRAWN	CHECKED	APPR'D	APPR'D	APPR'D	TOLERANCES DECIMAL (UNLESS OTHERWISE NOTED)			ANGULAR	SCALE
A.K. Walling 10-2-64	P.D. 10-2-64			R.	1 PL ±.1	2 PL ±.03	3 PL ±.010	±0°30'	1/4

PLASTIC DIE - FOR CAPACITOR DISCHARGE FORMING OF 57 INCH ELLIPTICAL BULKHEAD

DRAWING, DESIGN AND OTHER DISCLOSURES PROPERTY OF
REPUBLIC AVIATION CORP., MFG. ENG. DIV.
FARMINGDALE, L. I., NEW YORK
UNAUTHORIZED USE, MANUFACTURE OR REPRODUCTION IN WHOLE OR IN PART IS PROHIBITED

TOOL NO. MRP 2621

EPOXY DIE
FIGURE 20

①

36②

36③


T3-2032-.50-
SPACED EQUAL

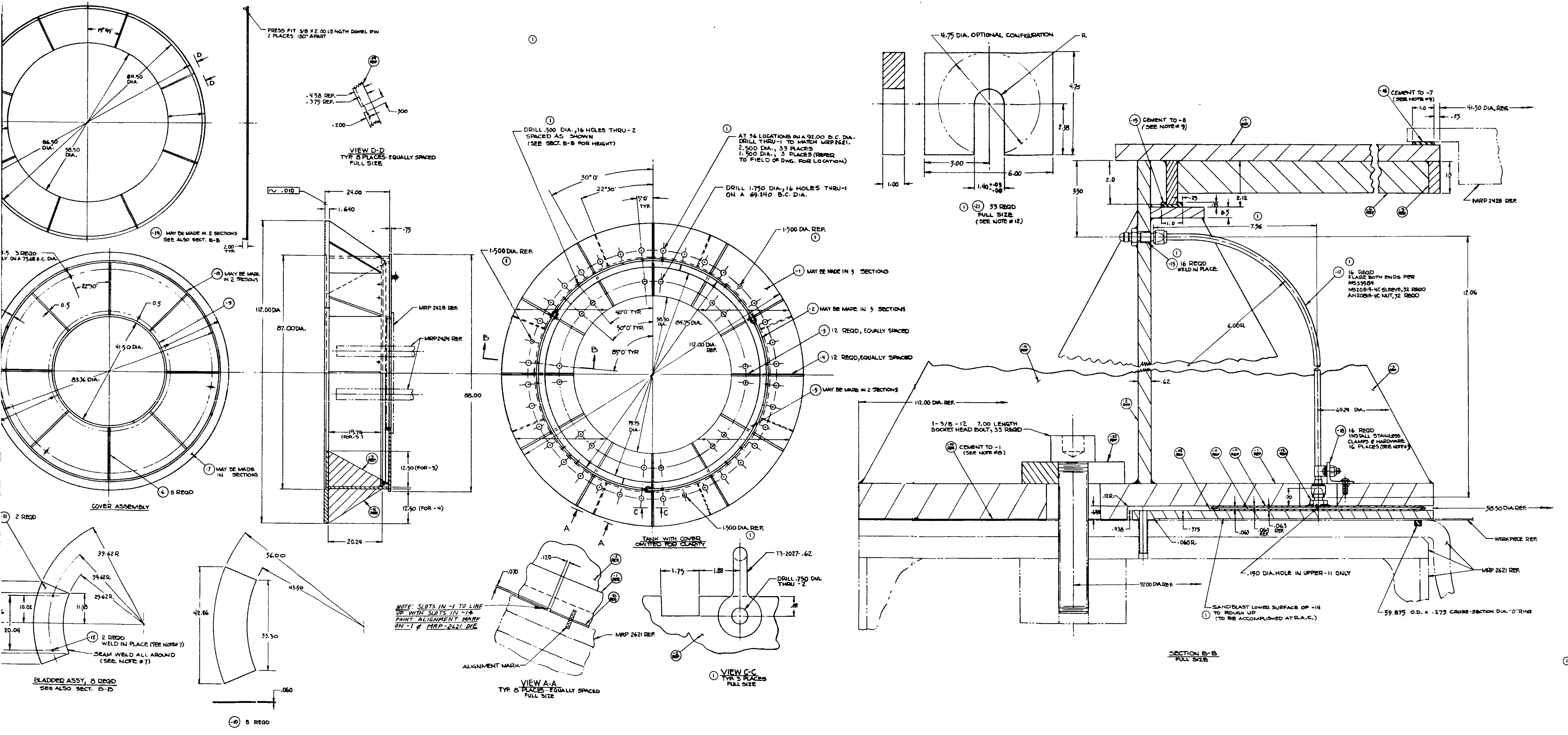

NOTE: VENDOR INFORMATION ONLY

MFR. ONLY
1.) -7 WITH -6-8 & -9
2.) -1 WITH -2-3-4 & -5
3.) -14 PRESSURE PLATE
4.) MACHINE ALL DETAILS AS REQD.
① 5.) ADD ALL HOLES AS INDICATED.
6.) FOR -1 CHOOSE SUITABLE THICKNESS TO OBTAIN 1.64 THICKNESS AFTER WELDING AND MACHINING

NOTES

ADDITIONAL REQUIREMENTS UNLESS OTHERWISE NOTED

(1) ALL-OVER MAXIMUM ROUGHNESS IN MICRO-INCHES PER SYMBOL HEREWITH. 125
(2) BREAK ALL SHARP UNNECESSARY EDGES.
(3) LOCATION AND SIZE OF PINS, SCREWS AND BOLTS TO BE DETERMINED BY TOOLMAKER.
(4)
(5) DIMENSIONS GIVEN AS FRACTIONAL STOCK SIZES MAY VARY A MAXIMUM OF MINUS .06.
(6) WHERE A MANUFACTURER'S NAME AND NUMBER IDENTIFY A PART, ANOTHER MANUFACTURER'S EQUAL (DUPLICATE) PART WILL BE ACCEPTABLE.
(7) AFTER WELDING, RESTRAIN BLADDER & PRESSURE TEST TO 1500 P.S.I. NO LEAKAGE PERMITTED.
(8) AFTER CEMENTING IN PLACE, -10 GASKETS ARE TO BE TRIMMED TO CONFORM TO CUTOUTS ON -1 BASE.
(9) -15 & -16 GASKETS MAY BE SPLICED FROM MATERIAL AVAILABLE IN R.A.C. HARDWARE CRIB AS MIL-R-6130, GRADE B, TYPE 2, MED. CELL SPONGE RUBBER, 5 FOOT LENGTHS.
(10) ALL MACHINED INTERNAL FILLET RADII .030 UNLESS OTHERWISE NOTED.
(11) SURFACE MARKED ~ .010 TO BE FLAT WITHIN .010.
(12) -21 WASHERS TO BE FABRICATED FROM 4340 STL PLATE HARDEN & TEMPER TO 150-175 KSI.
① (13) -19 & -20 HAVE BEEN CANCELLED & WILL NOT BE REUSED.

✓	MIL-C-4003	CEMENT (EC 847 [illegible])					
1	59.875 O.D. X .275 DIA	"O" RING					
33	1-3/8-12-7.0L	SOCKET HEAD BOLT					
2	3/8 X 2.00 L	DOWEL PIN					
32	MS20819-4C	SLEEVE					
32	MS20818-4C	NUT					
3	T3-2032-5-15	SHOULDER EYEBOLT					
3	T3-2027-.62	ANCHOR SHACKLE					

MRP 2628

SHEET 1 OF 1

NO. REQ. PER ASSY	PART NO.	NAME	DIA.	THICK	WIDTH	LENGTH	MATERIAL
33	-21	WASHER		1.0	5.0	6.0	4340 STL PL SEE NOTE [illegible]
16	-18	SUPPORT		.125			1.5X1.5X2.0 [illegible]
16	-17	TUBE	.250			20.5	CRES TUBE MIL-T-[illegible]
1	-16	GASKET		.250	1.0	156.0	[illegible]
1	-15	GASKET		.250	1.0	262.0	NOTE #9
1	-14	PRESSURE PLATE		0.5	87.0	87.0	H.R.S.
16	-13	FITTING (MAKE FROM AN 832-4C UNION)					
16	-12	FITTING (MAKE FROM AN 815-4C					UNION)
16	-11	PLATE		.041	13.7	31.0	CRES. [illegible]
8	-10	GASKET - 40 DUROMETER		.062	16.5	45.0	[illegible]
1	-9	BAFFLE		0.5	1.5	130.0	H.R.S.
1	-8	BAFFLE		0.5	2.0	262.0	H.R.S.
1	-7	COVER		.07	88.5	88.5	H.R.S.
8	-6	STIFFENER		0.5	1.5	20.0	H.R.S.
1	-5	RING		0.5	85.0	85.0	H.R.S.
12	-4	GUSSET		0.5	13.7	20.5	H.R.S.
12	-3	GUSSET		0.5	12.7	20.0	H.R.S.
1	-2	WALL		.625	12.5	270.0	H.R.S.
1	-1	BASE		[illegible]	113.0	113.0	H.R.S.

①

DRAWN	CHECKED	APPR'D	APPR'D	APPR'D	TOLERANCES	SCALE
A.R. Walker 10-15-64	[illegible] 10/26/64	[illegible] 10/17/64		[illegible]	±0.1 ±.03 ±.010 ±0°30'	1/8

WATER TANK- FOR 57 INCH DIA. DIE-CAPACITOR FORMING

REPUBLIC AVIATION CORP. MFG. ENG. DIV.
FARMINGDALE L.I. NEW YORK

TOOL NO. MRP 2628

37①

37②

37③

WATER TANK
FIGURE 21

④

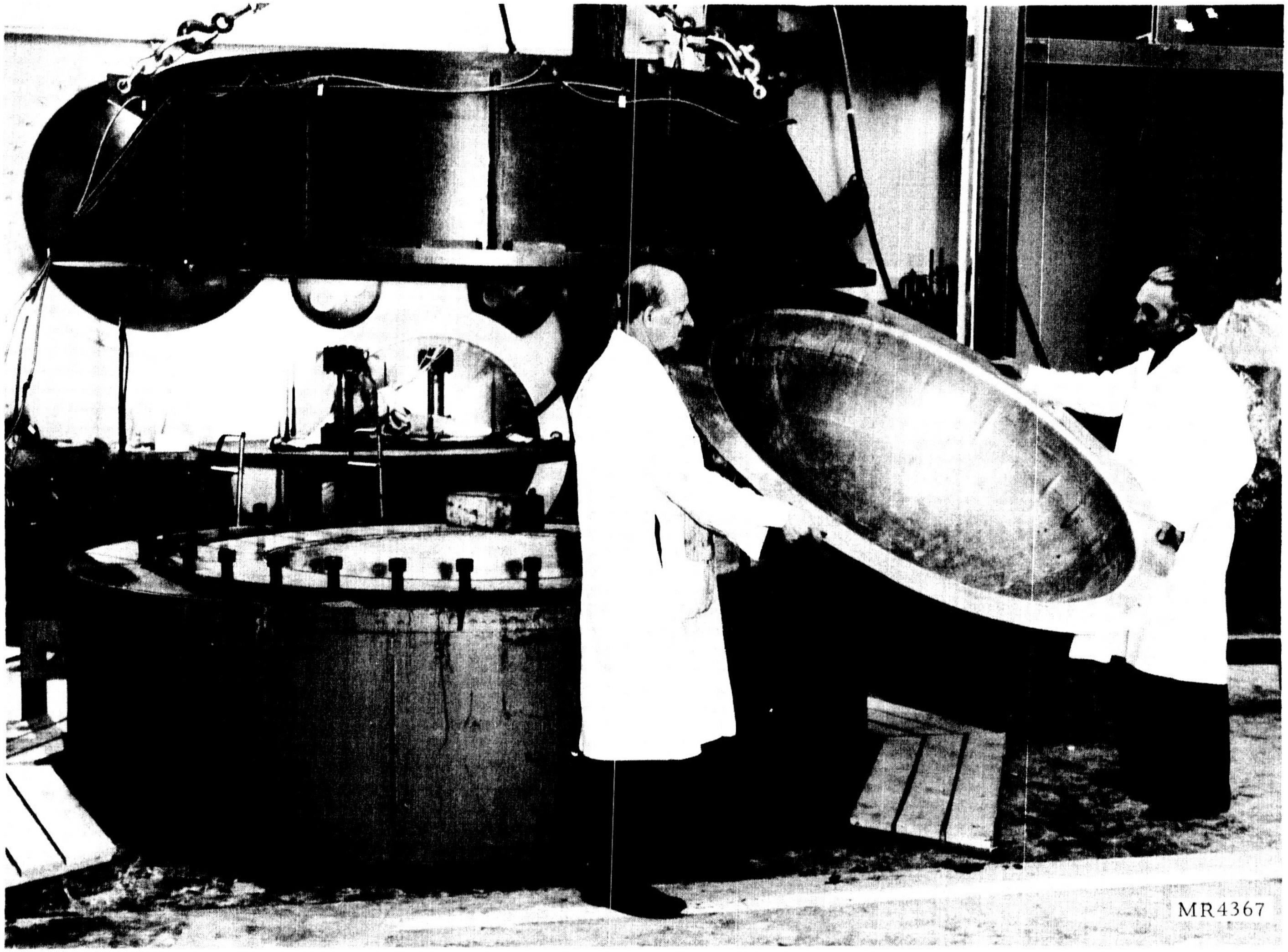

Note: Electrodes mounted on tank cover plate can be seen in background between tank and die

The dome contour was originally smooth, but is shown after a series of sizing discharges (shots 85 to 96) with circular initiation wires which caused contour wrinkles to return

57-INCH EPOXY DIE, TANK COVER AND COMPLETED ELECTROHYDRAULIC FORMED PART 57-2

FIGURE 22

2. EH Forming Experiments

The first experiment in electrohydraulic (EH) forming combined the high draw restraint conditions of high (300-400 psi) initial flange pressures and the largest blank (84") which the tooling would accommodate.

The curves below(taken from forming data in Table 3) show the thinout and draw (dashed lines) deviated considerably from the desired "normal" (solid lines) curves. As forming proceeded, flange pressures were reduced to 90 psi to increase draw. This produced some contour wrinkling which was a concern in this first experiment since the tolerable amount which would be stretched out in attaining die contour, had not yet been established. The thinout curve, however, was a greater concern since it indicated that the fracture line would be reached before the dome center contacted the die. Consequently, experiment 57-1 was terminated after a 14-inch dome depth had been attained.

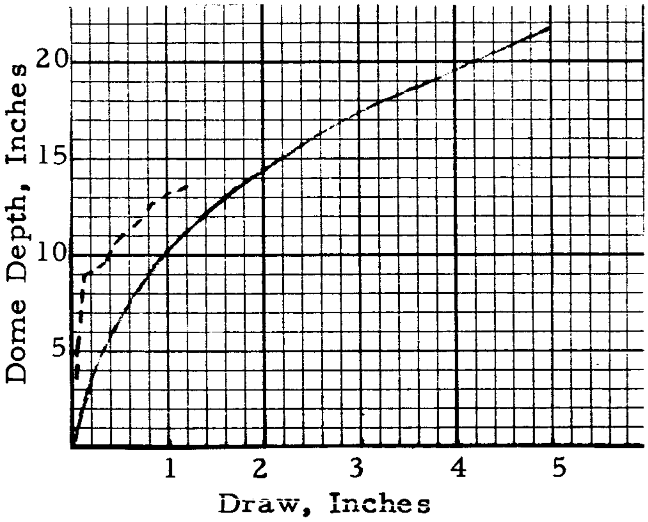

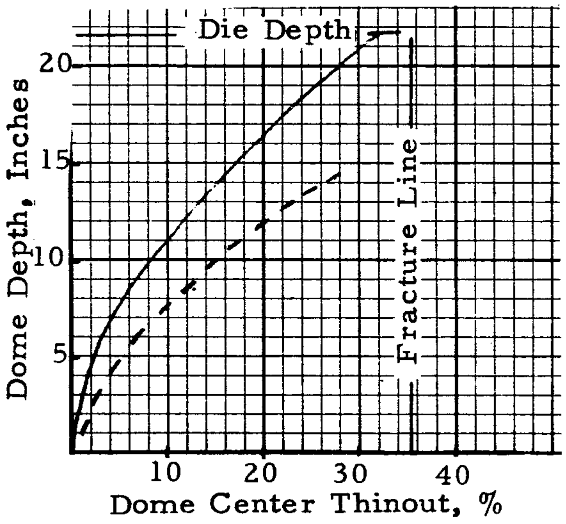

In view of the above results, the second experiment (57-2) employed a smaller (80") blank diameter to reduce the draw restraint, and forming was begun with a relatively low (100 psi) flange pressure. These changes produced contour wrinkling that was more severe than in the first experiment and flange pressures were continuously increased between sequences of discharges (see forming record in Table 4) to reduce the wrinkling by increasing stretch. However, the average draw curve (page 42)

TABLE 3

ELECTROHYDRAULIC FORMING RECORD
PART 57-1

		Discharge Voltage KV and Wire Size	Flange (Bladder) Pressure, psi and Flange Draw, inches Position									
Shot #	Dome Depth inches		1	2	3	4	5	6	7	8	Dome Center Thickness, inches	Remarks
Vacuum	2.60		400	400	400	400	400	400	400	400	.080	
1	4.74	6	400	300	300	300	300	300	300	300		
		.06	.05	.05	.05	05	.05	.05	.05	.05		
2	5.83	7										
		.09	08		.12		.06		.08			
5	8.58	9	200	200	200	200	200	200	200	200	.070	Reduced pressure to increase draw
			.08		.12		.06		.03			
6	9.19	8										
			.15		.18		.12		.08			
7	9.79	8.5	150	150	150	150	150	100	100	100		Reduced pressure to increase draw
			.50		.30		.40		.35			
8	10.39	9.0	400	150	150	150	150	300	300	400		
			.50		.34		.50		.40			
9	10.76	9.2	400	150	150	150	400	200	200	400	.067	Slight wrinkles in contour
			.50		.40		.50		.45			
10	11.16	9.5	150	200	150	250	150	200	150	250		
			.55				.70		.50			
11	11.56	10.0	150	150	150	150	150	150	150	150		
			.60	.50	.51	.50	.81	.31	.60	.64		
15-17	12.92	10.2	130	130	130	130	130	100	100	130		
		.12	.93	.87	.85	.87	.85	.64	.76	.98		
18-20	12.92	10.2	.90	.90	.90	.90	.90	.80	.80	.90		
		.06										
21-23	13.13	10.2	.97	.87	.85	.89	.85	.70	.76	.98		
		.09										
24-26	13.56	10.2	1.26	1.04	.96	1.01	1.02	1.0	1.38	1.39		
		.09										
27-29	14.07	10.2	150	90	90	90	90	90	150	150		
		.09	1.28	1.20	1.33	1.40	1.06	1.18	1.38	1.39		
30-32	14.19	10.2	300	300	300	300	300	300	300	300	.058	More wrinkles in contour; increased pressure
		.09										
33-35	14.44	10.2										Wrinkling removed Part somewhat conical due to high stretch/draw ratio.
		.09										

Experimental Conditions

.080 x 84-inch diameter 2219-O blank
960 uf capacitor bank (10KV = 48,000 joules)
Electrode gap 20-inch for shots 1 to 29, 33-inch for shots 30 to 35
Wire diameter as indicated (.06, .09, .12") - .06" found to be most effective
Electrodes rotated 45° between shots
Lubrication - light grease both sides
Draw measured at the blank circumference

TABLE 4

ELECTROHYDRAULIC FORMING RECORD
PART 57-2

Shot #	Dome Depth inches	Discharge Voltage KV and Wire	Flange (Bladder) Pressure, psi and Flange Draw, inches Position									Dome Center Thickness, inches	Remarks
			1	2	3	4	5	6	7	8	Average		
2	5.82	7.0	100	100	100	100	100	100	100	100	100	.080	
		.06	.40	.35	.32	.30	.28	.20	.15	.20	.28		
8	8.82	9.0	150	150	150	150	150	175	175	175	162		Water drained. Part is spherical with moderate radial wrinkles
		.06	.72	.75	.80	.87	.82	.71	.75	.72	.77		
20	11.14	10.2	300	300	300	175	175	175	175	175	196	.072	Electrodes lower 6" to increase work done per shot. Part still wrinkled.
		.06	1.15	1.13	1.15	1.25	1.25	1.07	1.07	1.05	1.13		
38	15.27	10.4	150	150	150	150	150	150	150	150	150	.064	Water drained. Part still wrinkled.
		.06	2.40	2.40	2.35	2.35	2.30	2.02	2.04	2.15	2.25		
50	18.62	10.7	450	450	350	350	300	300	300	350	355	.062	Water drained. Part still wrinkled. Will change to circular wire.
		.09	4.41	4.23	4.15	4.12	4.03	3.64	3.78	3.93	4.07		
61	19.96	11.5	400	400	400	400	400	400	400	400	400		Circular wire (.06x33" dia. used) to minimize center thinout.
		Circ.	4.72	4.67	4.55	4.70	4.85	4.70	4.68	4.65	4.68		
62	20.11	11.5	300	300	300	300	300	300	300	300	300	.054	Electrodes lower 6" to increase work per shot. Return to straight wire.
		.09	5.33	5.00	4.72	4.77	4.92	4.76	4.92	5.10	4.98		
72	21.02	14.0	700	700	700	700	700	700	700	700	700		700 psi flange pressure too great; caused deflection which caused water to leak past workpiece seal and into vacuum system.
		.09	5.86	5.81	5.68	5.66	5.62	5.34	5.30	5.40	5.58		
82	21.02	12.0	400	400	400	400	400	400	400	400	400		Dome center is contact with die. Radial wrinkles begin 2" under trim line; are now only 5" long, 1-1/2" wide, 1/4" deep.
		Circ.	PART IN CONTACT; NO FURTHER DRAW										
84	21.02	12.0	400	400	400	400	400	400	400	400	400		Part soundsin contact with die over entire contour. Remove wrinkles with 1 lb. hammer.
		Circ.	Selectively Chem Mill to .052"-.058" and Solution Treat										
96	21.02	12.0	400	400	400	400	400	400	400	400	400	.054	Circular wires employed for sizing; caused prior wrinkles to return See Figure 22.

Experimental Conditions

.080 x 80-inch diameter 2219-O blank
960 uf capacitor bank (10 KV = 48,000 joules, 14 KV = 142,000 joules)
Electrode gap 20" for shots 1 to 50
Electrodes rotated 45° between shots
Lubrication - light grease both sides
Draw measured at the blank circumference

Deviation from Contour Template after Forming

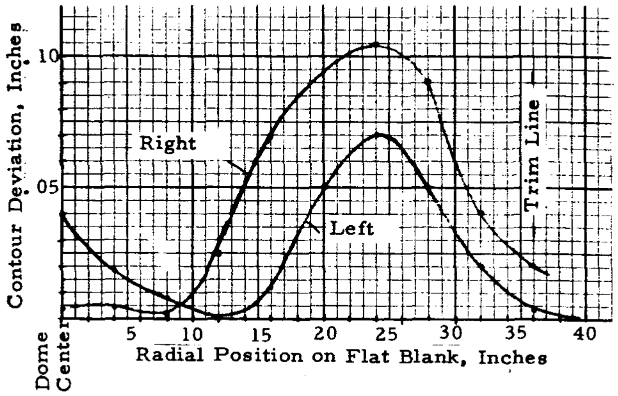

and the actual draw curves in Figure 23 for each flange segment, show that pressures as high as 700 psi, could not prevent draw. The strength of the hold-down bolts would not permit greater pressure and therefore the wrinkles could not be entirely stretched out. The wrinkles were however reduced to a size which was hammered out. However, as the curves in Table 4 show, the part was not quite to contour, and subsequent sizing (after chemical milling and heat treating) produced sufficient draw to return the wrinkles (see Figure 22).

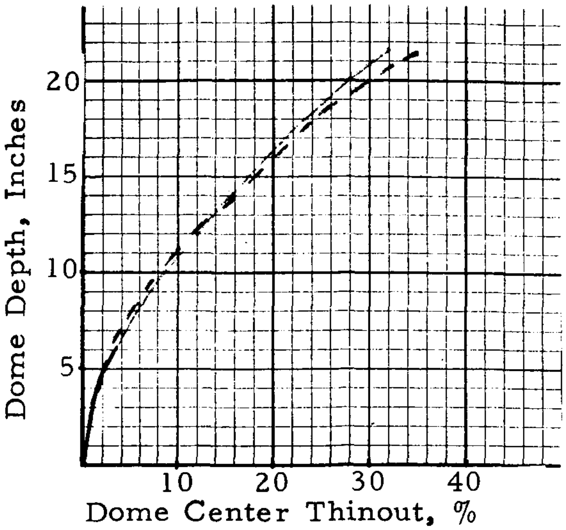

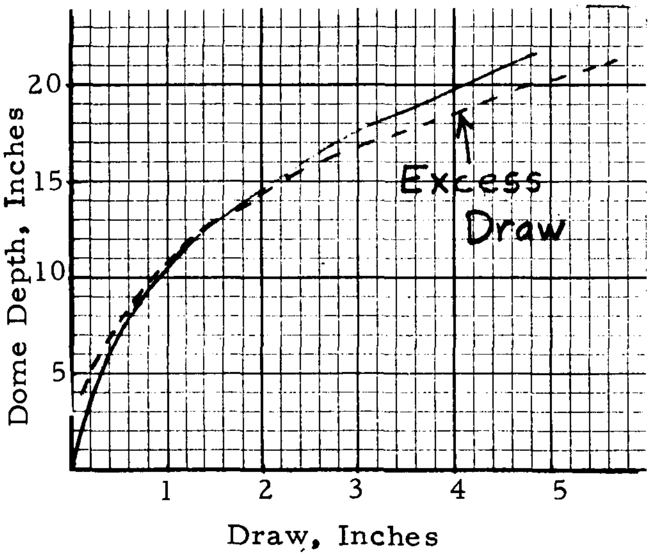

The above experiment established that:

80-inch blank was too small for the amount of draw which occurred under the particular flange lubrication-friction condition. Midway through the forming operation, draw reduced the flange to only a few inches and even excessive pressures are not sufficient to control draw. Consequently, future experiments were conducted with 80-inch blanks and greater friction or with 84-inch blanks.

The number of discharges to attain die contour was excessive and time consuming. The entire forming operation required 16 hours for two men. This includes raising the electrodes

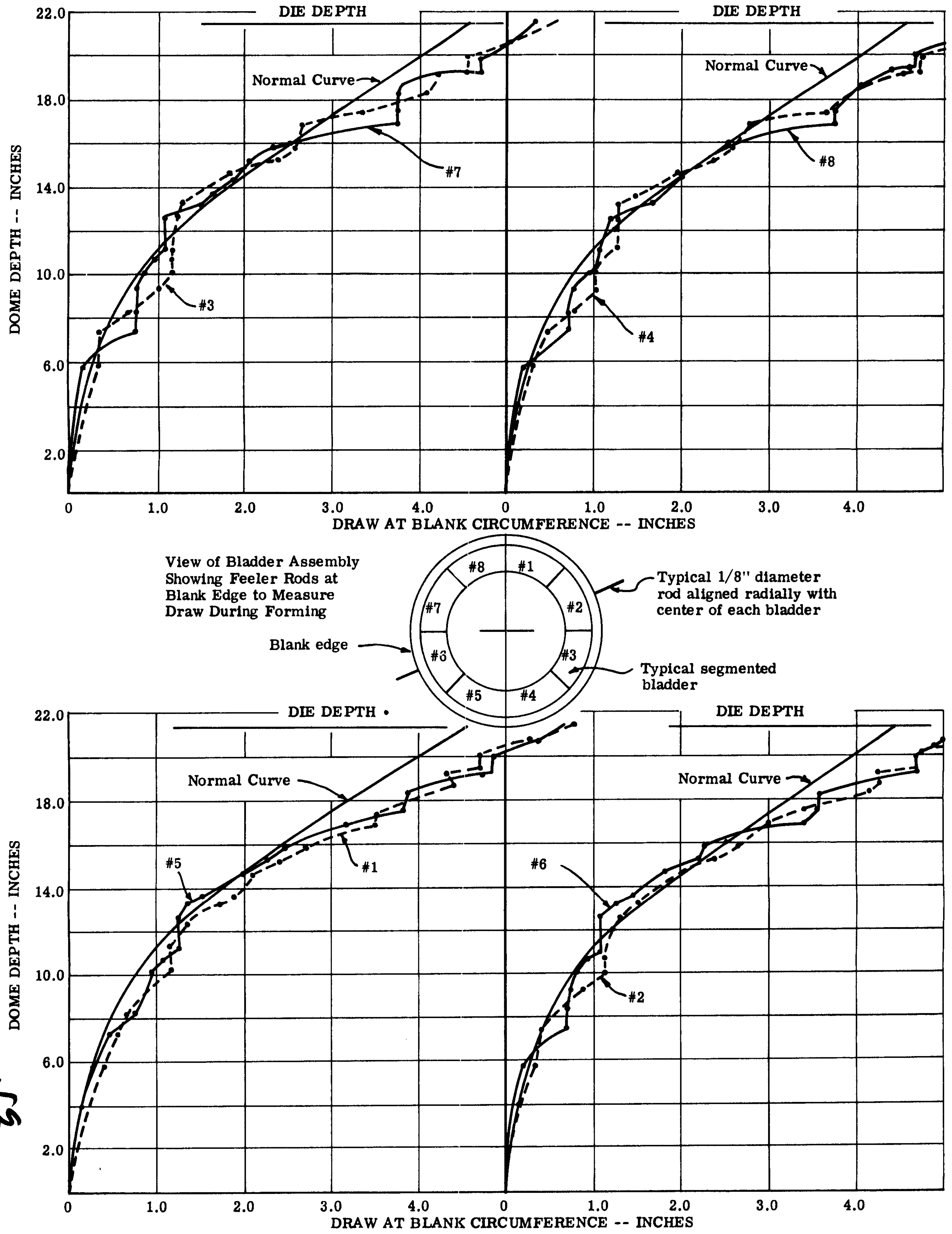

DEPTH-DRAW CURVES PLOTTED DURING EH FORMING OF DOME 57-2

FIGURE 23

②
43

and inserting a new wire for each discharge, measuring dome depth, and measuring draw after each group of several discharges.

The remaining four EH experiments included techniques such as the using of large diameter (33-inch) initiation wire rings rather than the straight wire between electrodes which were employed for most discharges in the first two experiments. Circular wires were effective in producing greater stretch near the trim line and thereby avoiding excess dome center thinout. (High energy processes such as EH cause greatest acceleration and consequent elongation of the areas of the workpiece which are closest to the discharge.)

However, the power of the 155,000 joule bank, although adeqate to vaporize the 33-inch diameter wires in .03-inch and .06-inch sizes, produced lower pulse pressures with the longer wire. Therefore, the net amount of metal movement was not significantly different from that obtained with shorter, straight wires positioned centrally with greater standoff distance. Indeed, the smaller standoff required with the circular wires required precautions (such as insulation of electrodes and careful positioning of wire) to avoid direct arcing to the workpiece.

Since the EH process time could not be reduced, and since the power was marginal in attaining close contour conformance, it was decided to modify the tooling to permit forming of the 57-inch bulkheads by direct hydraulic pressure.

C. HYDRAULIC FORMING 57-INCH BULKHEADS

1. Tooling Modifications and Procedure

The 28-inch EH dome forming tooling was modified for hydraulic forming (HF) by simply using a complete pressure plate rather than an annular ring to provide flange pressure (see sketch). The modification permitted hydraulic forming, but contour buckling was excessive. The reason for this is that sufficient draw restriction could not be maintained since the upward forming pressure (HF) on the pressure plate partially released the downward flange pressure, P.

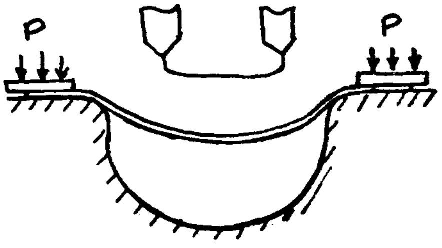

28-inch EH Tooling

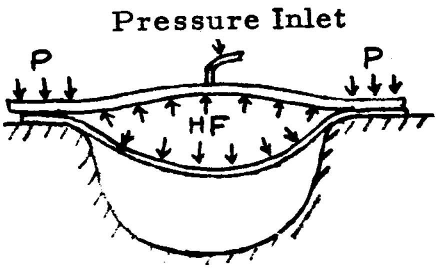

28-inch HF Modification

This led to the thought that the problem could be avoided simply by designing the restriction plate as two parts; an inner plate to contain the forming pressure and an outer ring to maintain flange pressure. The sketch below

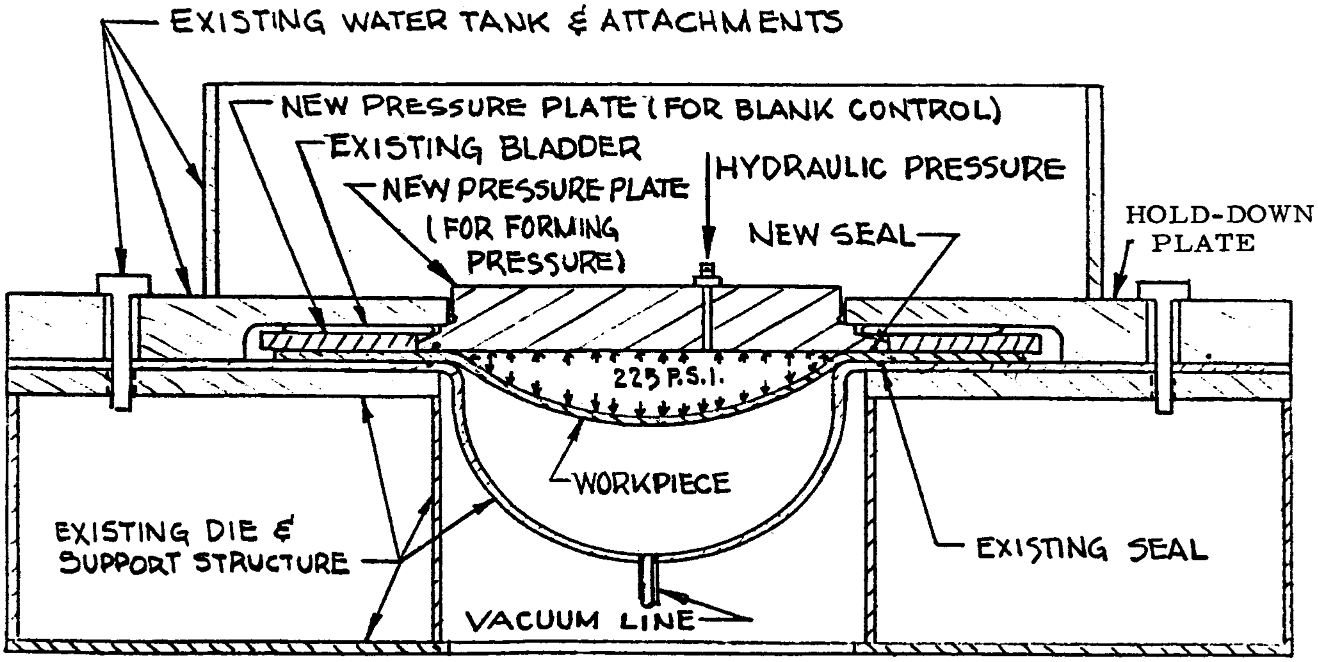

57 INCH DIE ARRANGEMENT FOR HYDRAULIC FORMING

shows the two pressure plates independently restrained by the hold down plate. These modifications were made to the 57-inch tooling as shown in the sketch.

The modification satisfactorily permitted independent control of flange and forming pressure. Under the 270 psi forming pressure the 2-inch thick pressure plate bulged up two inches in permanent deformation. The deformation created no problems, but the .1-inch to .2-inch upward elastic deformation of the hold down plate was excessive to maintain an O-ring seal, even with precompression to two-thirds of the O-ring diameter (see top sketch). To obtain forming pressures greater than 150 psi it was necessary to remachine the pressure plate to accept an expandable seal (seelower sketch).

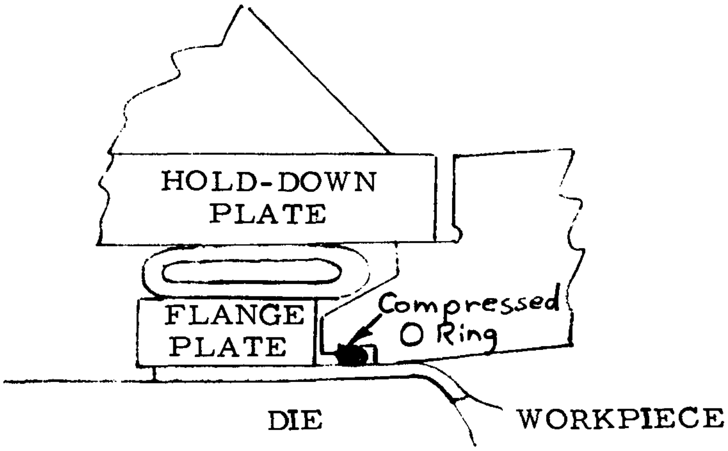

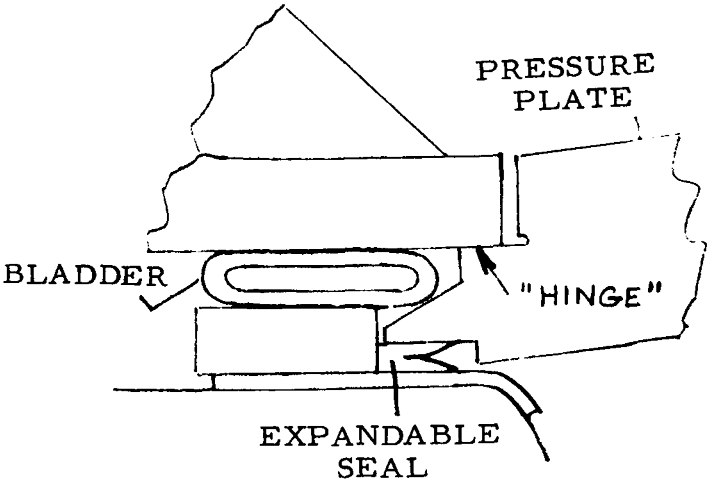

2. Hydraulic Forming (HF) Experiments

Experiments 57-7 to 57-27 were conducted by HF. The pertinent experimental data is shown in Table 5. In general the experiments can be divided into two categories. In the first category, (57-7 to 57-14) flange control through blank size, friction and lubrication were investigated, and difficulty with flange plate bending increased the number of experiments required. In the second category, (57-15 to 57-27), corrected tooling was employed, lubrication and flange control practices were finalized, and the last group of parts (57-23 to 57-27) were formed under essentially identical conditions. These conditions were outlined on Page 31.

The significance of the HF experiments and the effectiveness of blank diameter, flange plate roughness, flange pressure and lubrication upon flange control will be best understood by reference to Table 5 and the comments below for each group of experiments.

Experiments 57-7,8,9 These experiments were conducted with small (80-inch) blank diameter and established that:

- a rough, non lubricated, flange surface produced too much restraint even with a very low flange pressure (50 psi) and small blank diameter (80-inch). These conditions give a k/d value of .87 which is twice that of smooth, non lubricated 84-inch blanks and is four to six times higher than the k/d value for smooth, lubricated 84-inch blanks.
- the 80-inch blank is too small. (This was observed earlier in the EH experiments.) Draw cannot be adequately restrained (see depth-draw curve for 57-8) when the blank is lubricated, and the relatively small flange cannot be uniformly controlled. For example, the wide deviation (dotted lines in Table 5, graph 57-9) between regions of maximum and minimum draw as compared with average draw (dashed lines) tends to increase contour wrinkling in local areas.
- Expectedly, under equivalent flange restraint conditions, the thinout of a 80-inch blank is less than that of an 84-inch blank. For example, at 19.3-inch dome depth, the .080-inch original thickness of bulkhead 57-9 was thinned to a center

TABLE 5

EXPERIMENTAL DATA FOR HYDRAULIC FORMING OF 57-INCH BULKHEADS

Dome No.	Dome Depth	Flange Plate	Lubrication	Initial Blank Dia., (inches)	(4) Average Flange Pressure (psi)	Average Draw, (inches)	(6) r, (inches)	(3) k/d	Flange Condition	Center Thickness	Contour
57-7	15.1	Rough(1)	None	80	50	1.2	38.8	.87	Flat		Incomplete
57-8	11.3	Rough(1)	Grease	80	400	1.2	38.8	.11	Flat		Incomplete
57-9	19.3	Smooth	None	80	400	3.8	36.2	.17	Flat, Uneven Draw	.064	Incomplete
57-11	21	Smooth	None	84	200	2.8	39.2	.38	Wrinkled	.046	Fractured
57-12	21	Smooth	None	83	150	3.1	38.4	.30	Wrinkled	.049	Fractured
The wrinkled condition was associated with waviness in the 3/8" pressure plate which was replaced											
57-13	11.5	Smooth	Grease, One Side	84	250	1.6	40.4	.13	Badly Wrinkled		Incomplete
57-14	9.8	Smooth	Grease, One Side	82	450	1.6	39.4	.09	Badly Wrinkled		Incomplete
Wrinkling continued with a new pressure plate and it was recognized that the flange surface had yielded due to fracture of welds in the supporting structure. Rewelding and addition of a 1" plate provided an adequate repair											
57-18	22	Smooth	Grease	84	300	5.0	37.0	.19	Flat		Complete
57-19	22	Smooth	Grease	84	420	4.8	37.2	.14	Flat		Complete
57-20	22	Smooth	Grease	84	400	5.2	36.8	.15	Flat		Complete
57-22	22	Smooth	Inner Flange(2)	84	400	5.1	36.9	.15	Wrinkled		Complete
57-23	22	Smooth	Inner Flange(2)	84	400	5.5	36.5	.14	Flat		Complete
57-25	22	Smooth	Inner Flange(2)	84	400	5.5	36.5	.14	Flat		Complete
57-26	22	Smooth	Inner Flange(2)	84	490	5.0	37.0	.12	Flat		Complete
57-27	22	Smooth	Inner Flange(2)	84	410	5.1	36.9	.15	Flat		Complete

(1) Rough grit sandblasted

(2) No grease in outer 7" border

(3) Calculated as $k/d = \frac{t\sigma(60-r)}{P(r^2-900)}$ see Appendix B

(4) Pressure at completion

(5) The solid line is the "normal" curve

(6) Outer flange radius at the indicated dome depth

DOME DEPTH VERSUS AVERAGE DRAW CURVES (5)

——— normal curve
- - - average curve
. . . . . maximum and minimum draw segment curves

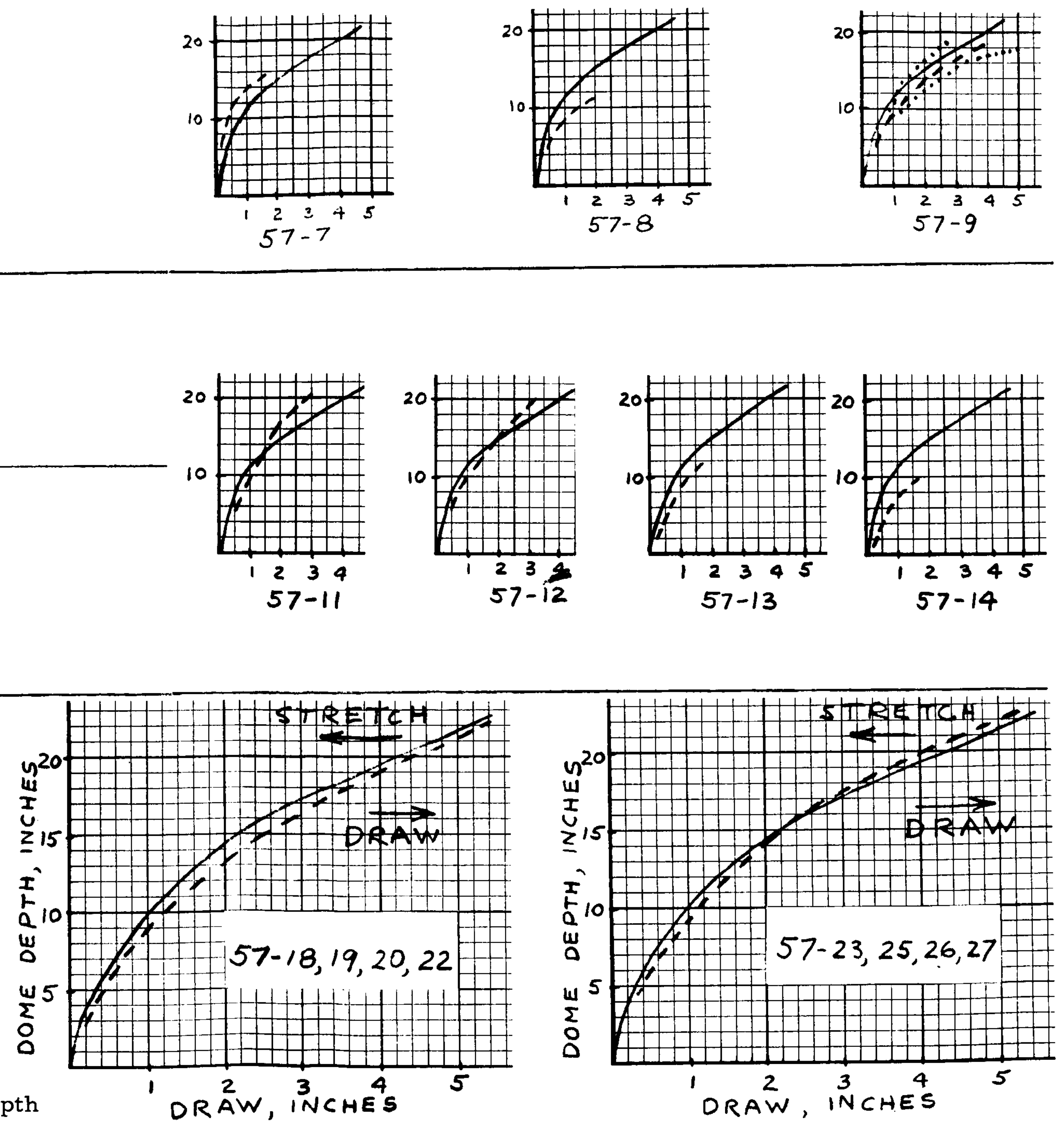

thickness of .064-inches. At this depth an 84-inch blank would have been thinned to .060-inches.

Experiments 57-11, 12 These experiments were conducted with larger blank diameters (84-inch and 83-inch) and without lubrication. Table 5 shows that despite low flange pressures (150 to 200 psi), the lack of lubrication produced excess restraint. This can be seen in the high k/d ratio, the stretch-draw curves located in the stretch region, and the thinness of the center (.046-inches and .049-inches). Consequently, these domes split at the dome center and the finished elliptical contour could not be attained.

Experiments 57-13, 14 The addition of lubrication for these experiments markedly reduced the friction/draw (k/d factor) to .09 and .13. However, due to the flange plate yielding problem, higher flange pressures could not avoid flange wrinkling and close control of the stretch-draw curves was not possible. The curves were considerably below the "normal" curve and contour buckling was therefore more than the amount which is nornal during the initial forming stage. This can be seen in Figure 24.

Experiments 57-18 to 27 With the repair of the flange support structure, addition of a 3/4-inch die plate and a new 1/2" flange pressure plate no further flange control problems were experienced. Table 5 indicates that this group of parts were formed at low k/d ratios. All experiments conformed closely to the desired "normal" stretch-draw curve and little difference exists between each of the eight stretch-draw curves which were plotted during the forming operation. These are the curves which comprise the average curves in Table 5. A typical set of the eight curves (one for each flange zone) is shown in Figure 25. A completed dome in the die can be seen in Figure 26. Figure 27 shows a photograph of a completed dome on the contour template. A typical flange control data sheet for this group (57-18 to 27) bulkheads is shown in Table 2. As a group, the bulkheads had the typical thinout gradient along the contour shown in Figure 28. As expected, the domes for which higher average flange pressures were somewhat thinner since draw was less.

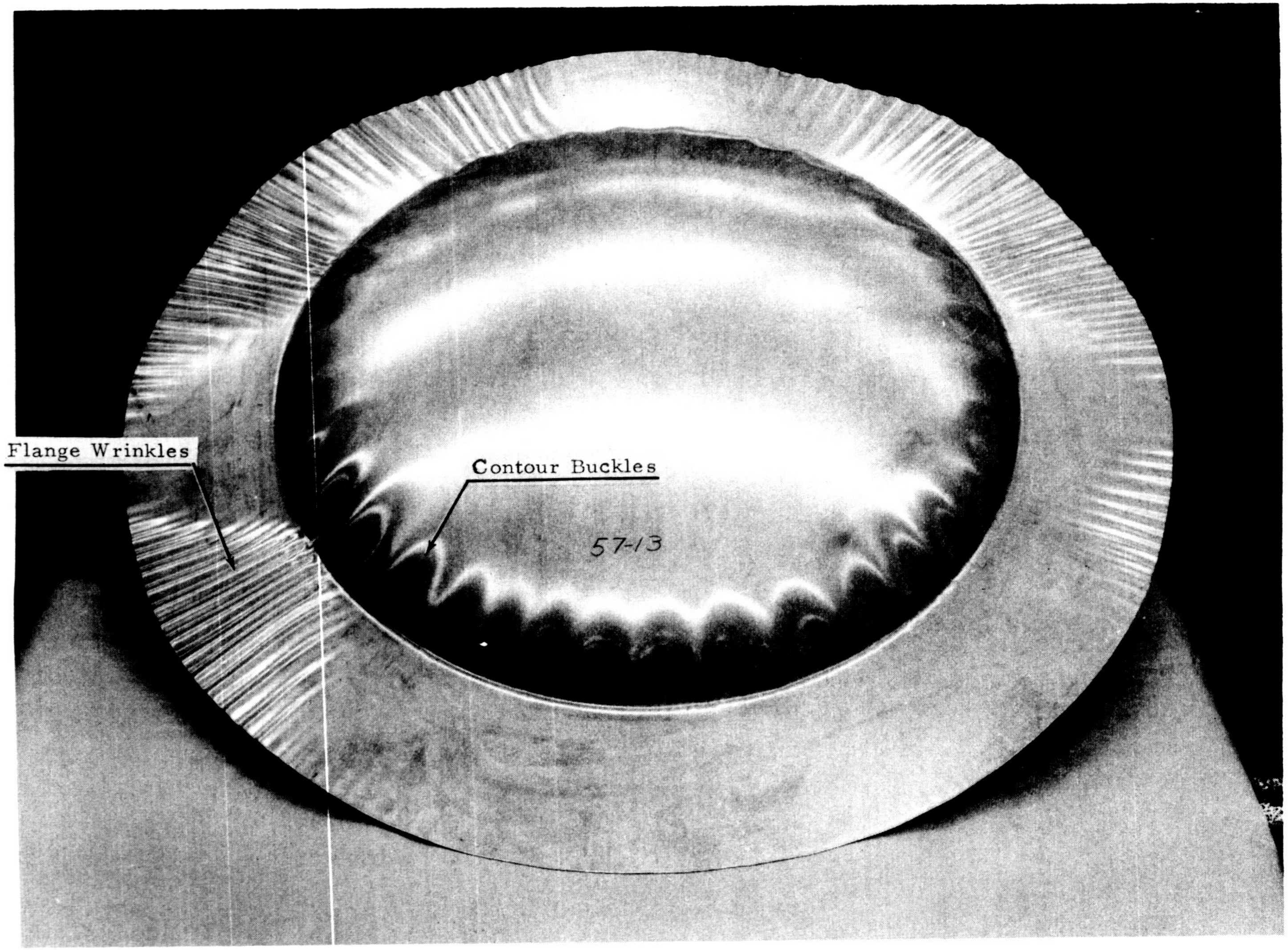

HYDRAULIC FORMING EXPERIMENT 57-13

MR-4664

Forming of this bulkhead was terminated due to severe localized wrinkling of the flange which was caused by bending of the flange pressure plate and yielding of the die support structure. Consequently, the flange could not be adequately restrained, and excess draw has produced contour buckling which is excessive.

FIGURE 24

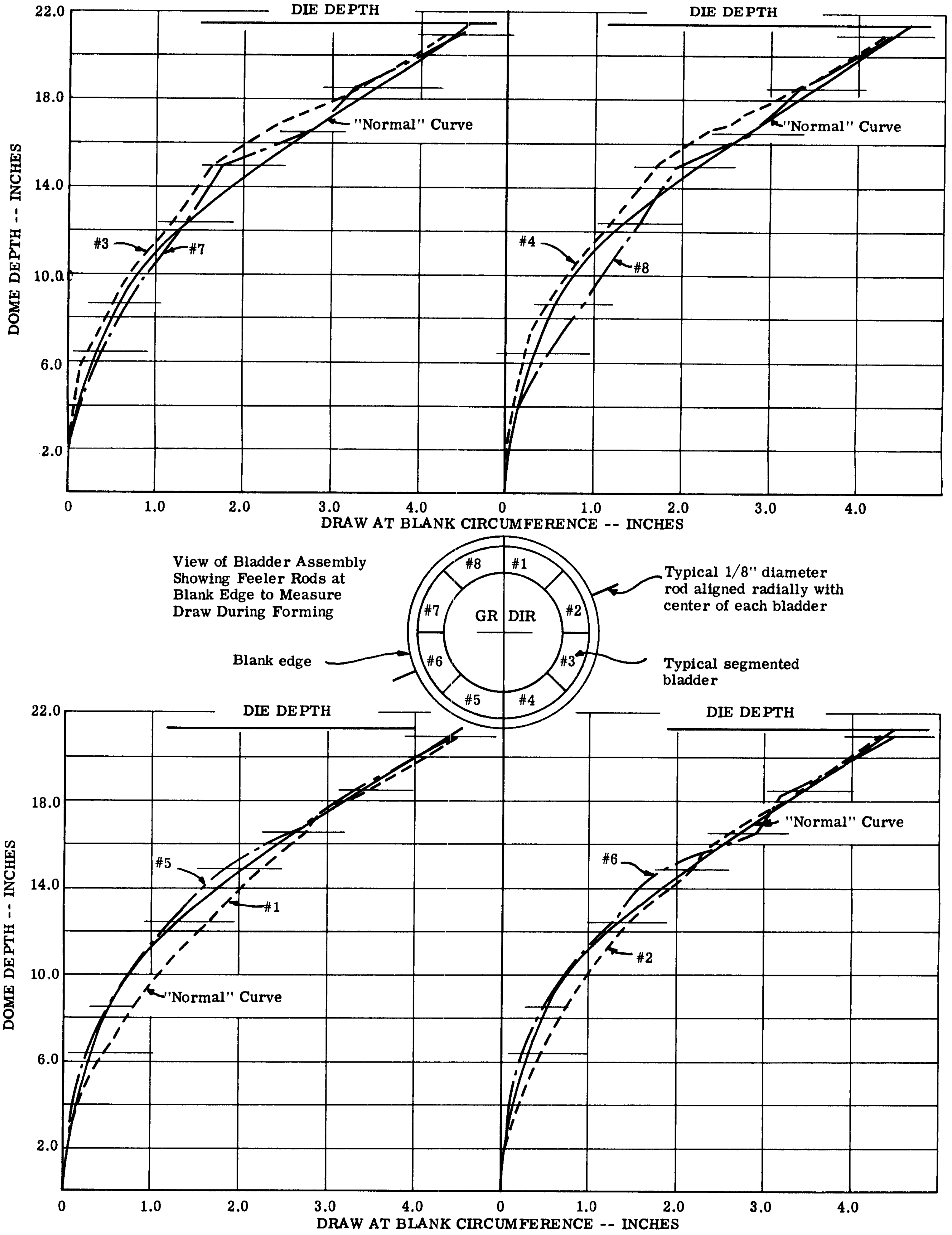

DEPTH-DRAW CURVES PLOTTED DURING EH FORMING OF DOME 57-25

FIGURE 25

2

MR4593

The last group of hydraulically formed bulkheads (57-19 to 27) are shown ready for shipment after chem-milling, heat treatment, sizing and trimming. An untrimmed bulkhead is shown in the forming die.

HYDRAULICALLY FORMED BULKHEADS (57-19 to 27)

FIGURE 26

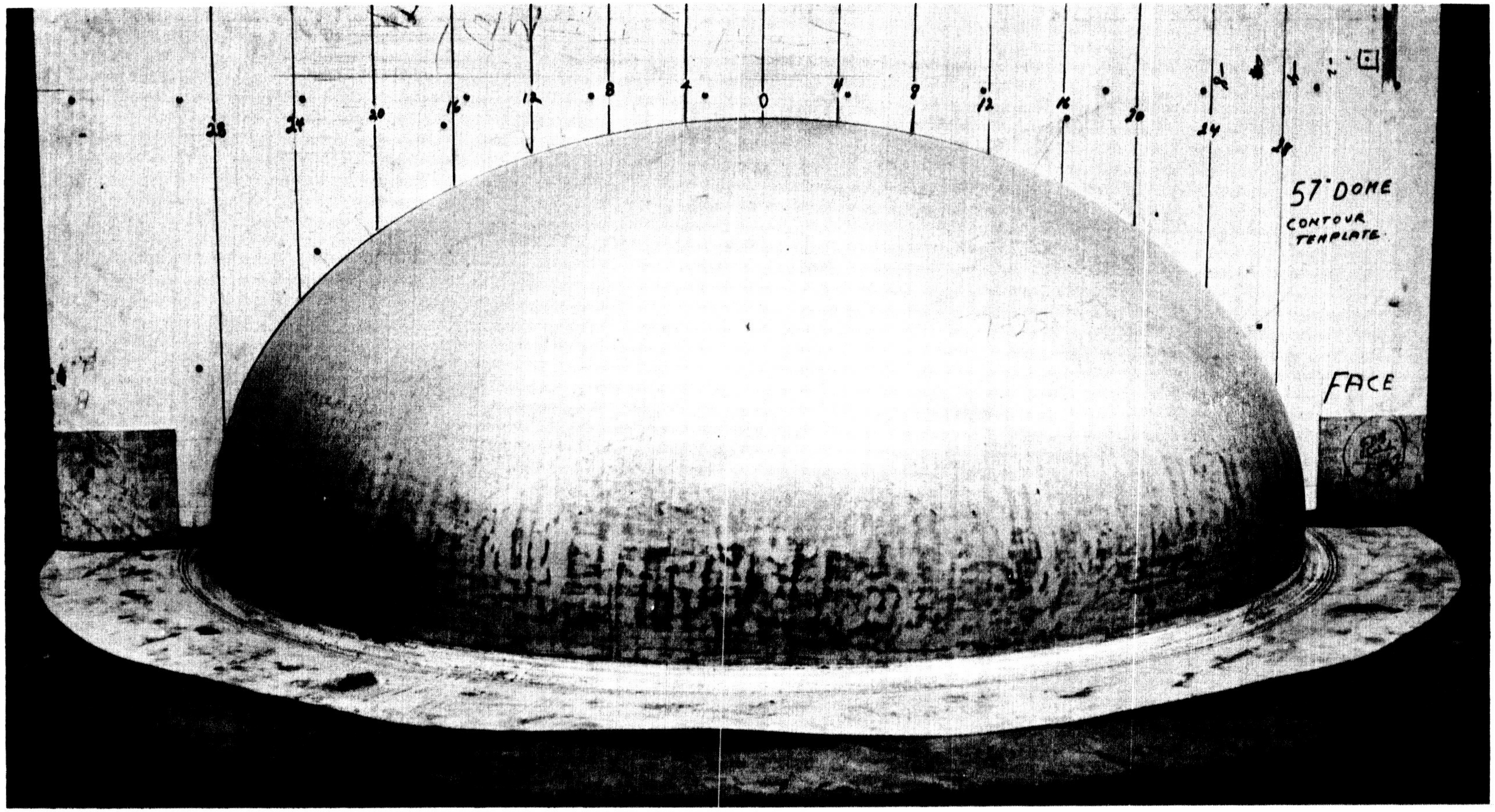

MR 4565

The pattern on the contours shows that overall contact has been made with the epoxy die surface. The .150-inch maximum contour deviation of the part was the largest for the last series of experiments (57-19 to 27). After sizing, the maximum contour deviation was reduced to .064-inch.

HYDRAULIC FORMING EXPERIMENT 57-25

FIGURE 27

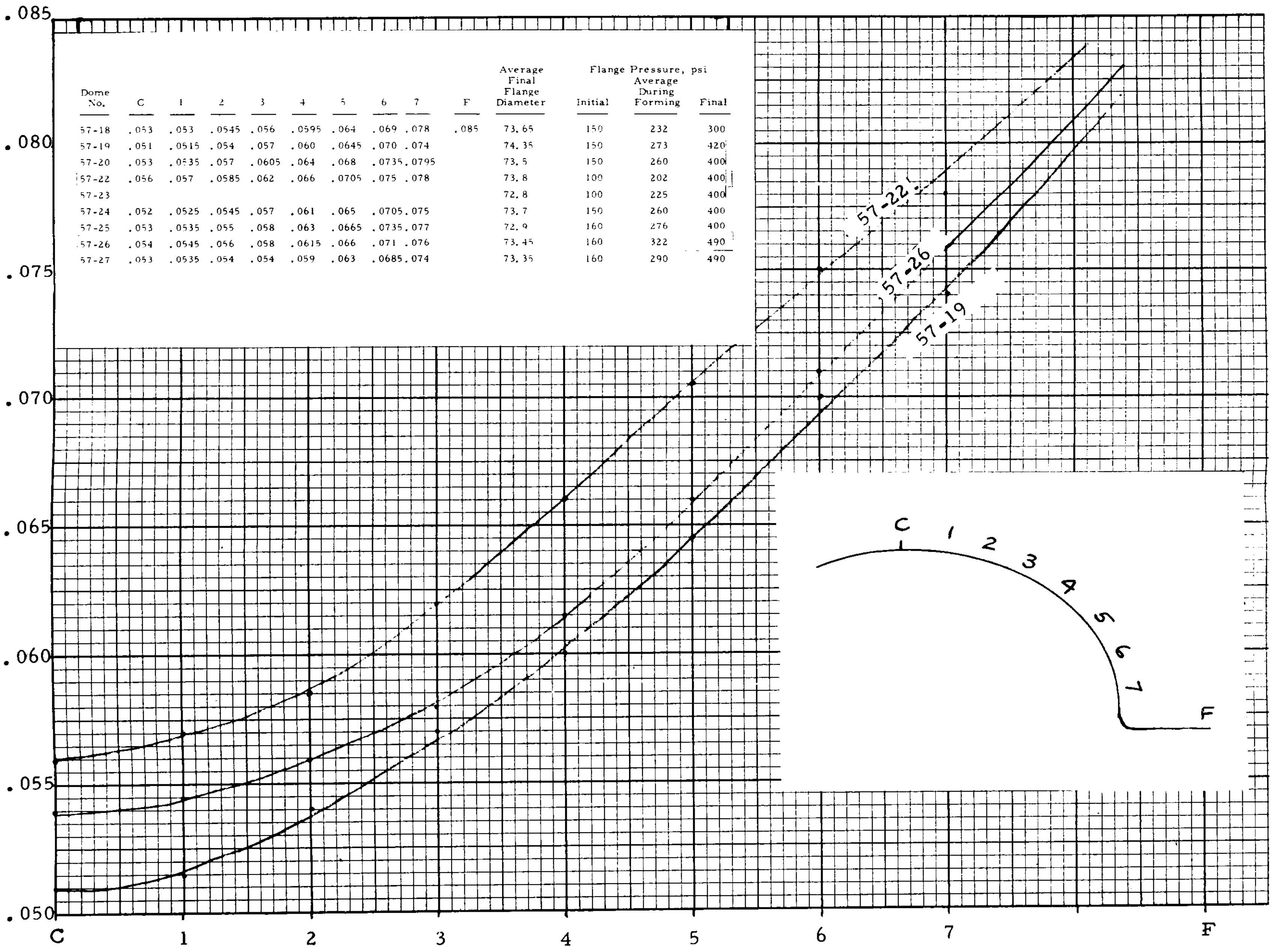

Dome No.	C	1	2	3	4	5	6	7	F	Average Final Flange Diameter	Flange Pressure, psi Initial	Flange Pressure, psi Average During Forming	Flange Pressure, psi Final
57-18	.053	.053	.0545	.056	.0595	.064	.069	.078	.085	73.65	150	232	300
57-19	.051	.0515	.054	.057	.060	.0645	.070	.074		74.35	150	273	420
57-20	.053	.0535	.057	.0605	.064	.068	.0735	.0795		73.5	150	260	400
57-22	.056	.057	.0585	.062	.066	.0705	.075	.078		73.8	100	202	400
57-23										72.8	100	225	400
57-24	.052	.0525	.0545	.057	.061	.065	.0705	.075		73.7	150	260	400
57-25	.053	.0535	.055	.058	.063	.0665	.0735	.077		72.9	160	276	400
57-26	.054	.0545	.056	.058	.0615	.066	.071	.076		73.45	160	322	490
57-27	.053	.0535	.054	.054	.059	.063	.0685	.074		73.35	160	290	490

57-INCH BULKHEAD THICKNESS AFTER HYDRAULIC FORMING OF .080" X 84" DIAMETER BLANKS

FIGURE 28

D. CHEMICAL MILLING, HEAT TREATMENT AND SIZING

Prior to chemical milling the contour thickness was recorded by vidigage readings on two perpendicular longitude lines along the contour (Figure 29). Thereupon, the bulkheads were alkaline cleaned and mounted to the motorized (air driven) fixture shown in Figure 30. The bulkheads were partially immersed in an etchant bath. Turco 9H, which has a chemical milling rate of about .001 inches per surface per minute, was the etchant. The bulkheads were rotated at about three revolutions per minute. The entire chemical milling process required 30 minutes and during this time several micrometer readings were made of the flange edge thickness. These measurements provided the key to the immersion level since the amount to be removed had been established along several latitude lines by the initial vidigage measurements. Four immersion depths were employed during the process; this method of selective milling by successive immersion stages was effective in obtaining a finished uniformity of bulkhead thickness within the .008-inch tolerance range.

After chemical milling, the surface smut was removed and the bulkheads were rinsed in cold water.

After chemical milling, the 2219 bulkheads were heated to 890°F in an oven without fixturing. Fixturing was employed in initial tests but was found to produce more quench distortion than unfixtured bulkheads.

Cryogenic quenching in liquid nitrogen (to minimize distortion) was considered for a time but a sufficiently large quench tank was not available. Actually, the cold water quenching was quite satisfactory in that most parts were still within .1 inch to .2 inches of the contour template. Two parts, however, had maximum deviations of about .5 inches.

After quenching, the parts were sized in the forming die with up to 270 psi water pressure on the ellipsoid contour. Most parts were within .06 inches of nominal contour after this operation.

Aging was performed in an oven at 375°F ± 10°F for 36 hours. The bulkhead flange was fastened to a plate during this operation to avoid damage in handling.

During the chemical milling, solution treatment, sizing (reforming to the die), and aging operations, the contour and diameter changes were recorded for each bulkhead. Typical records of the data are shown in Tables 6 and 7. The tables show that contour deviation is greatest several inches from the trim line (position 24). The tables also show that deviation was reduced by the hydraulic die sizing operation which employed approximately 250 psi to restretch the bulkhead to die contour.

Table 8 records the changes in bulkhead diameter which occurred during processing. The measurements are consistent from experiment to experiment and thereby indicate that the process is reproducible. However, it is interesting to note that each operation produces significant increase or decrease in bulkhead diameter. To begin, the male plaster, and die were fabricated about .020 inches larger than intended. After forming, the bulkheads were another .020 inches larger than the die and were removed from the die by prying up the flange. It can only be concluded that either the fiberglass die expanded elastically under the 250 psi hydraulic forming pressure, or that the diameter increase was a result of elastic relaxation of the workpiece from the circumferential compression of the draw forming operation. Thereupon, chemical milling, in thinning .080 inches to .055 inches thickness, removed about .025 inches from the diameter. Next, the metallurgical change of solution treatment further decreased the diameter which after sizing was still about .055 inches less than after chemical milling. A contraction (density increase) of .0005 inch per inch is usual for aluminum alloys and this amounts to a contraction of .028 inches for a 57-inch diameter. Aging represents a metallurgical expansion of .0007 inch per inch (density decrease) which is .040 inches for the 57-inch diameter. The average observed expansion, however, was about .070 inches. Finally, the removal of the flange reduced the diameter by .020 inches, thereby indicating that the flange had contained residual circumferential stresses.

Despite these relatively large fluctuations in diameter, the eight completed (trimmed) parts listed in Table 8 were in a narrow range of .011 inch and the part dimensions average exactly to the 57.038-inch die dimension. The dimensional fluctuations which occur during processing exactly balance each other, and no springback allowance need be made to the die dimension.

VIDIGAGE MEASUREMENT OF BULKHEAD THICKNESS MR 4562

FIGURE 29

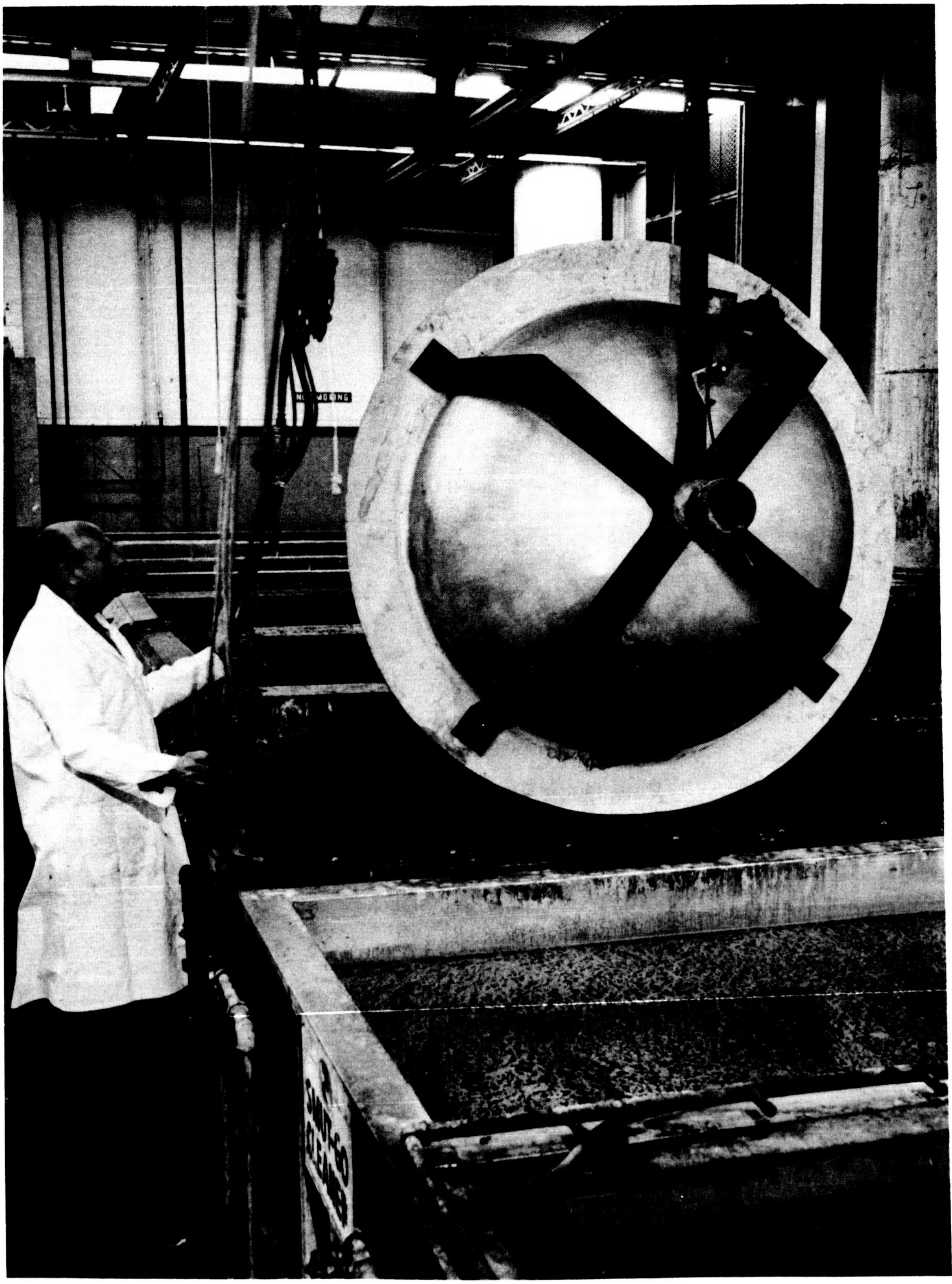

MR 4594

MOTORIZED ROTATING FIXTURE FOR SELECTIVE CHEMICAL MILLING
TO OBTAIN UNIFORM BULKHEAD THICKNESS

FIGURE 30

TABLE 6

BULKHEAD 57-23

CONTOUR AND DIAMETER MEASUREMENTS DURING PROCESSING

Process Sequence	.28	.24	.20	16	12	8	4	C	4	8	12	16	20	24	28	Diameter (inches)
After Forming	.00 .00	.09 .12	.05 .09	.04 .08	.00 .04	.00 .00	.00 .00	.03 .03	.02 .01	.04 .02	.07 .02	.12 .03	.10 .15	.18 .20	.00 .00	57.060
After Chem Milling and Die Sizing	.03 .00	.08 .09	.03 .05	.00 .02	.00 .00	.00 .00	.00 .00	.02 .00	.03 .02	.00 .02	.02 .00	.04 .00	.05 .03	.09 .07	.00 .00	
After Solution Treatment	.06 .03	.08 .09	.07 .07	.04 .00	.02 .00	.00 .00	.03 .00	.03 .02	.02 .02	.00 .01	.00 .00	.03 .00	.07 .03	.10 .07	.06 .02	
After Die Sizing	.02 .04	.03 .05	.00 .02	.00 .00	.00 .00	.00 .00	.03 .00	.03 .02	.03 .00	.03 .00	.00 .00	.00 .00	.02 .03	.03 .05	.02 .06	56.982
After Aging	.00 .09	.02 .08	.00 .03	.00 .00	.00 .00	.00 .00	.02 .00	.03 .03	.03 .02	.02 .02	.00 .00	.00 .00	.01 .00	.04 .04	.00 .00	
After Trimming																57.043

Contour readings are taken on two perpendicular longitude lines and are measured as deviations from nominal contour by template measurement as per Figure 27. The diameter was measured with a vernier circumference tape.

The above measurements are of contour deviation in inches at indicated positions along the contour. "C" represents the dome center.

TABLE 7

BULKHEAD 57-27

CONTOUR AND DIAMETER MEASUREMENTS DURING PROCESSING

Process Sequence	28	24	20	16	12	8	4	C	4	8	12	16	20	24	28	Diameter (inches)
After Forming	.00 .00	.08 .08	.08 .03	.04 .00	.00 .00	.00 .00	.00 .02	.03 .03	.02 .02	.02 .02	.00 .00	.02 .00	.05 .04	.08 .07	.00 .00	57.059
After Chem Milling	.00 .04	.10 .09	.04 .04	.00 .00	.00 .00	.00 .00	.05 .03	.05 .06	.03 .04	.00 .04	.00 .04	.00 .04	.06 .06	.09 .08	.00 .00	
After Solution Treatment and Die Sizing	.02 .15	.03 .08	.02 .03	.00 .00	.00 .00	.02 .02	.02 .03	.03 .04	.03 .03	.02 .02	.00 .00	.00 .00	.02 .00	.03 .04	.03 .00	57.016
After Aging	.02 .04	.02 .04	.00 .02	.00 .00	.00 .00	.02 .02	.03 .04	.04 .04	.03 .04	.02 .02	.00 .00	.00 .00	.01 .02	.03 .03	.00 .02	57.073
After Trimming																57.039

Contour readings are taken on two perpendicular longitudinal lines and are measured as deviations from nominal contour by template measurement as per Figure 27. The diameter was measured with a vernier circumference tape.

The above measurements are of contour deviation in inches at indicated positions along the contour. "C" represents the dome center.

TABLE 8

TOOL AND DIE MEASUREMENT AND 57-INCH BULKHEAD DIAMETER MEASUREMENTS DURING PROCESSING

Bulkhead	57-18	57-19	57-20	57-23	57-24	57-25	57-26	57-27
Form		57.025*	57.032*	57.060	57.057	57.065	57.056	57.059
Chem Mill	(Diameter reduced about .025" during chem milling)							
Solution Treat and Size	56.982	56.983	56.988	56.982	56.992	56.992	56.994	57.016**
Age	57.056	57.058	57.056					57.073**
Trim	57.033	57.044	57.034	57.043	57.043	57.040	57.032	57.039

Tool and Die Dimensions	
Die Drawing Dimension -	57.015 ±.010
Male Plaster -	57.036
Fiberglass Die (at beginning of experiments) -	57.038
Fiberglass Die (at end of experiments) -	57.038

Operation	Diameter Change
Form	about .025" larger than die
Chem Mill	reduced by .025"
Solution Treat and Size	further reduced by .055"
Age	increased about .070"
Trim	reduced about .020"

* Formed at 200 to 235 psi; other bulkheads formed at 250 to 290 psi

** Relatively high readings; reason unknown.

Note: Plaster, die, and part measurements were made to .002" accuracy by use of circumferential vernier tape

E. INSPECTION PROCEDURES AND RESULTS

1. Inspection Procedures

The following inspections and tests were performed to indicate conformance to contract specifications, drawing #18-A-2-709 tolerances, and additional requirements considered pertinent for quality assurance (Figure 31).

a. Thickness

The thickness tolerance for the 57-inch bulkheads is .050" $^{+\,.008''}_{-\,.000''}$. Two sets of thickness readings were taken (transverse and longitudinal, to the sheet rolling direction) at four inch intervals as shown in the figure below.

All readings were recorded whether within tolerance or not. Readings were obtained with a vidigage to an accuracy of ±.001".

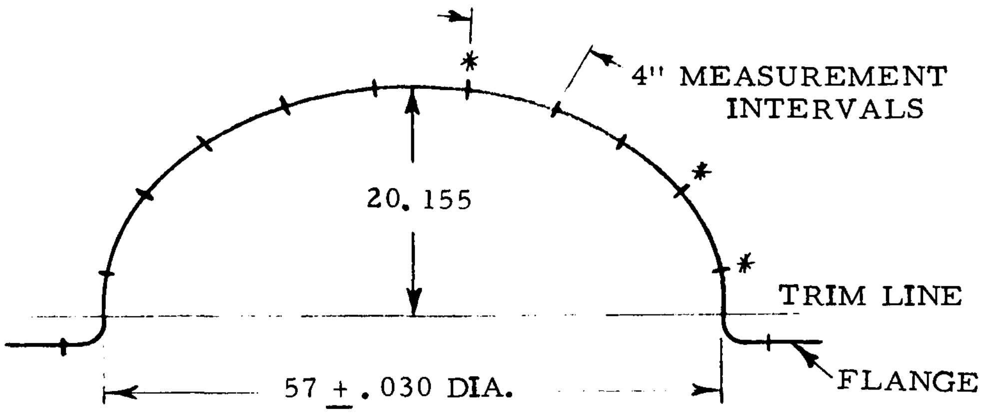

b. Contour

Contour tolerance for the 57-inch bulkhead is not specified. Templates and feeler gages were used for determining contour deviation from nominal ellipsoid contour. Measurements were taken at the same four inch intervals (up to the trim line) where thickness measurements were obtained. Bulkheads were rough trimmed for shipment to MSFC (1/2 inch beyond finish trim line).

c. Outside Diameter

The outside diameter tolerance for the bulkheads is 57 ±.030". Measurements were made at the trim line with a vernier circumference tape. Accuracy ±.002".

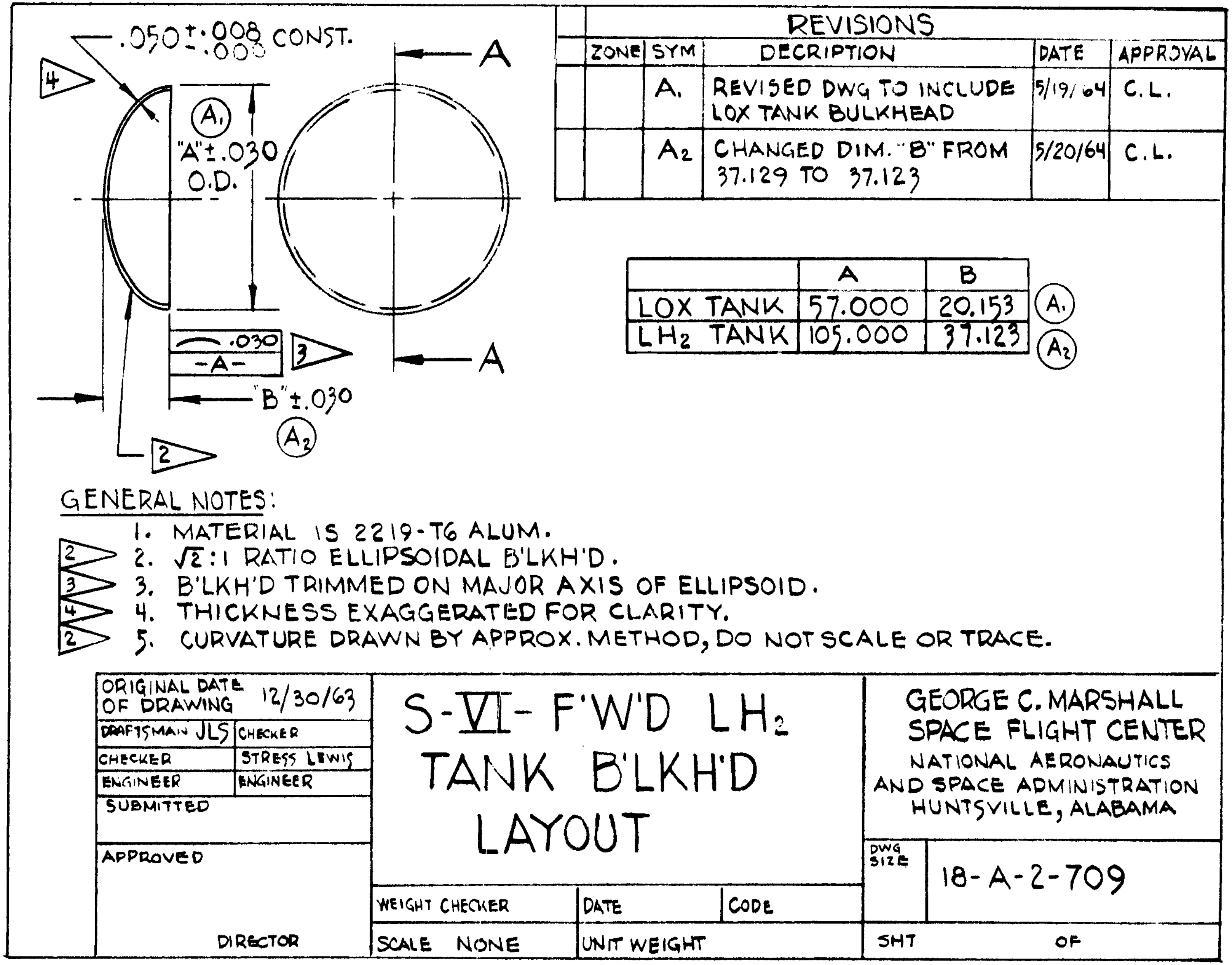

REVISIONS

ZONE	SYM	DECRIPTION	DATE	APPROVAL
	A1	REVISED DWG TO INCLUDE LOX TANK BULKHEAD	5/19/64	C.L.
	A2	CHANGED DIM. "B" FROM 37.129 TO 37.123	5/20/64	C.L.

	A	B	
LOX TANK	57.000	20.153	(A1)
LH_2 TANK	105.000	37.123	(A2)

GENERAL NOTES:

1. MATERIAL IS 2219-T6 ALUM.
2. $\sqrt{2}$:1 RATIO ELLIPSOIDAL B'LKH'D.
3. B'LKH'D TRIMMED ON MAJOR AXIS OF ELLIPSOID.
4. THICKNESS EXAGGERATED FOR CLARITY.
5. CURVATURE DRAWN BY APPROX. METHOD, DO NOT SCALE OR TRACE.

ORIGINAL DATE OF DRAWING 12/30/63
DRAFTSMAN JLS
CHECKER
CHECKER
STRESS ENGINEER LEWIS
ENGINEER
SUBMITTED
APPROVED
DIRECTOR

S-VI- F'W'D LH_2
TANK B'LKH'D
LAYOUT

WEIGHT CHECKER
DATE
CODE
SCALE NONE
UNIT WEIGHT

GEORGE C. MARSHALL
SPACE FLIGHT CENTER
NATIONAL AERONAUTICS
AND SPACE ADMINISTRATION
HUNTSVILLE, ALABAMA

DWG SIZE 18-A-2-709
SHT OF

REDUCED COPY OF MSFC BULKHEAD DRAWING

FIGURE 31

d. Surface Roughness

Surface profilometer measurements were taken in the transverse sheet rolling direction at the positions indicated by asterisks shown in the above figure. The target surface finish was 125 microinches.

e. Material Temper

The material Temper

The material was formed from 2219 aluminum in the O condition and the mechanical properties in the final condition must be equivalent to T6 or better. Minimum strength targets for the T6 condition are 36,000 psi yield, 54,000 psi ultimate and 6% elongation (in 2 inches).

Three tensile coupons will be taken from the flange area of each bulkhead.

f. Other

In addition to the above mentioned inspections and tests, any deviations or discrepancies peculiar to each part were to be obtained and recorded.

2. Inspection Results

The inspection data for the seven bulkheads which were shipped to George C. Marshall Space Flight Center are shown in Table 9. All parts were accepted and conformed to drawing 18-A-2-709 except for slight deviations in thickness and diameter.

The results indicate that the .008 inch thickness tolerance is adequate but that selective chem milling should be held to an 004 inch tolerance range to allow for some thinning in the die sizing operation.

The diameter range of .011 inch is considerably less than the .060 inch tolerance range. The previous discussion of dimensional changes during processing indicates that the die dimension should include no springback allowance.

All contour surfaces were smooth and none of the contour buckling which is normal (to avoid excess thinout or rupture) in early forming stages remained in the completed bulkheads.

TABLE 9

COMPILATION OF INSPECTION DATA - 57-INCH BULKHEADS

Part #	Thickness Range .050 +.008 -.000	Diameter 57.000± 030	Max. Contour Deviation (No Spec.)	Surface Finish	Tensile Data		
					Ult.	Yield	Elong.
57-18 (Extra Part*)	.044-.050	57.033	.040	60-125	61,700	50,100	6.5
					61,650	46,200	7.0
					62,200	43,000	6.0
57-19	.0475-.055	57.044	.064	60-125	62,330	43,250	7.5
					60,500	42,800	7.0
					62,500	44,100	8.0
57-23	.051-.0545	57.034	.090	60-125	61,980	43,660	8.0
					63,940	41,160	7.5
					63,380	45,730	8.0
57-24	.0475-.056	57.043	.040	60-125	62,180	42,950	8.0
					63,240	42,770	7.0
					61,650	42,660	7.5
57-25	.0515-.058	57.040	.051	60-125	61,230	43,540	8.5
					59,920	41,250	7.5
					62,240	42,930	8.0
57-26	.051-.056	57.032	.125	60-125	61,790	43,900	7.0
					63,250	44,550	8.0
					62,900	44,650	7.5
57-27	.053-.0575	57.039	.040	60-125	62,340	43,720	7.0
					61,780	41,230	7.5
					61,240	42,990	7.5

* Six parts were required by contract.

SECTION IV

CONCLUSIONS

1. With adjustable localized flange pressure to control draw, deep ellipsoid aluminum alloy bulkheads (1.4:1 ellipse) can be formed without contour wrinkles or splitting in diameter/thickness ratio up to 700. Flange control factors such as blank diameter, lubrication, pressure plate roughness and flange pressure must be optimized. Inverse dome forming is an alternate method of flange control but requires additional tooling (the inverted domes) and longer process time to make tool changes.

2. With flange pressure draw control, a prescribed "normal" curve of draw-dome depth must be followed to avoid the opposite extremes of splitting or contour wrinkling. As forming proceeds under increasing hydraulic pressure, flange pressure must also increase. This pressur increase compensates for the decreasing flange area and provides the radial strain which in the later forming stages erases the contour buckling. Such contour buckling must be permitted in early forming stages due to the high diameter/thickness ratio.

The required increase in flange pressure with continuing draw conforms closely to an expression derived from tension, compression and friction forces upon the flange.

3. Close contour and diameter ranges were held in fabricating the 57-inch bulkheads. The various diameter increases and decreases which occur during processing (forming, heat treatment, chemical milling) are compensating and the trimmed part diameter is within a few thousandths of an inch of the die diameter.

4. Selective chemical milling was established to be an effective method for correcting for thinout variation in the formed bulkhead. Thinout variation is dependent on flange restraint, and can be kept consistent from part to part by following a "normal" draw-dome depth curve.

5. Solution treatment and aging represented no particular difficulties despite the relative thinness of the 57-inch bulkheads. Contour distortion is minimized by free quenching (rather than fixture quenching) after solution treatment.

6. Even though energy conversion efficiency was reasonable (8%), electrohydraulic forming was marginal for forming 57-inch bulkheads due to power limitations of the 155,000 joule capacitor bank. The problem was principally in not obtaining sufficient impulse strength to remove wrinkles in the contour. By contrast, hydraulic forming appears particularly suited for forming of large thin bulkheads even though the tooling restraint forces are more than twice as high for hydraulic forming than for high energy (impulse) methods. In high energy forming, the forming forces are reacted by inertia and motion of the die and only the flange forces must be restrained by structure. For thin workpieces such tooling forces will be reasonable. However, for large thick workpieces, economy in the tooling structure will tend to dictate that explosive forming be employed.

7. The fiberglass shell die concept with suitable steel backup was satisfactory for the entire 57-inch experiemental program. Seven electrohydraulic and twenty hydraulic experiments were conducted.

8. In hydraulic forming the tool design must provide structural separation between flange pressure and forming pressure so that they may be independently applied.

9. Reasonable cost of tooling structure for hydraulic forming requires that elastic deflection of the flange support structure be permitted. This requires the use of a sliding expandable seal between the workpiece and the flange pressure plate. The seal developed during the current program was adequate to produce the required bulkheads, but a more reliable design such as an inflatable, low friction device would be more suitable.

APPENDIX A

DERIVATION OF MAXIMUM FLANGE PRESSURE FOR DRAW

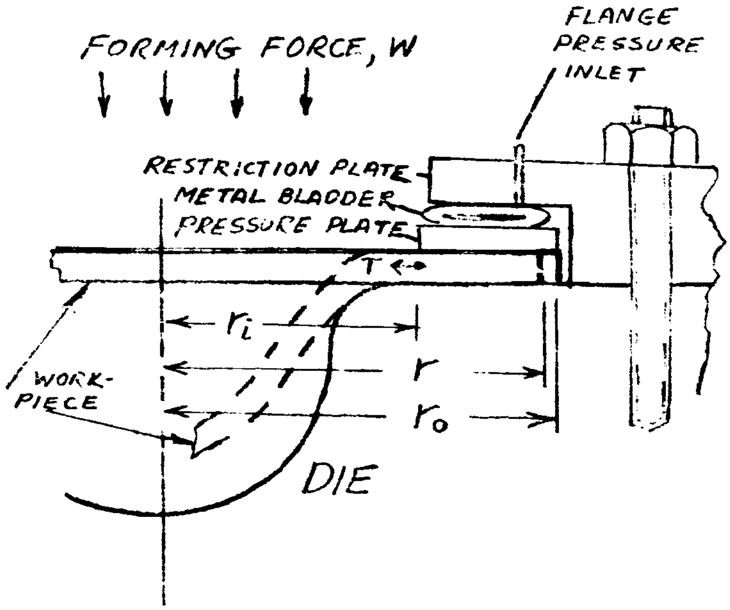

Figure Al. Tool and Workpiece Arrangement

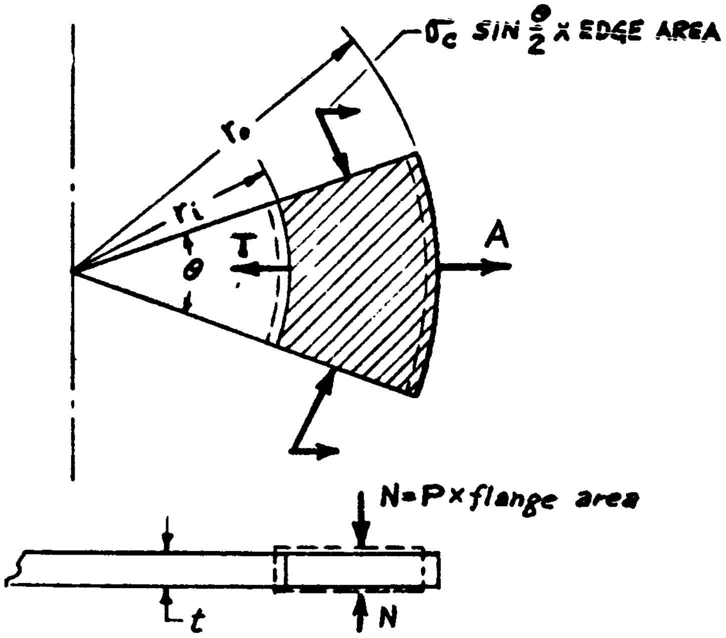

Figure A2. Force Distribution in the Workpiece Flange

The sketch in Figure Al shows symbolically the workpiece blank as positioned in the die prior to draw forming and during forming. A metal bladder over the flange area of the workpiece is pressurized to maintain a uniform pressure over the entire flange area. Figure A2 shows a pie shaped portion of the workpiece blank in which the flange area is shaded, and forces are designated by bold arrows. The flange area tends to move radially inward to the dashed lines under the tension force T which results from the downward forming force, W. In tending to move radially inward (or to draw) the elemental area tends to thicken as shown in the lower view of Figure A2.

Such thickening is resisted by the confined presence of workpiece metal outside the pie shape which is being considered. Consequently, while drawing is occurring, the thickening implies that there must be a compressive yield stress, σ_C, in the edge areas of the pie shaped flange. Assume that the normal force upon the flange, N, is increased until drawing just ceases. The edge areas of the pie shaped flange are then still at compressive yield as long as the forming force, W, which produces tension force, T, is still applied. Now assume that the tensile force, T, and the normal force, N, are increased in whatever proportion necessary to just prevent draw. At some point, forming by stretch will begin as tensile force, T, exceeds the tensile yield stress σ_T. It is therefore clear* that when a normal force just sufficient to prevent draw is applied so that forming by stretch occurs, the flange area is simultaneously in radial tensile yield and circumferential compressive yield.

To calculate the minimum value of flange pressure, P, which will prevent movement (draw) of the flange area, the forces upon the elemental area are equated:

$$T = A + 2\sigma_c \left(\sin \frac{\theta}{2}\right) (\text{Edge Area}) \qquad (1)$$

Tension force on the inner flange diameter	Friction force on the flange	Force resisting compression of the flange

From the geometry of the pie shape,

$T = \sigma_T t r_i \theta$ where σ_T = tensile yield stress

$A = \frac{2kP\theta}{2} \left(r^2_o - r^2_i\right)$ where k = friction coefficient

$$2\sigma_c \sin \frac{\theta}{2} (\text{Edge Area}) = 2\sigma_c \sin \frac{\theta}{2} (r_o - r_i)t = \sigma_c \theta (r_o - r_i)t$$

(since the sine of a small angle equals the angle)

---

* The existence of a radial tension stress equal to the material yield stress is obvious in that grid marked blanks characteristically show radial elongation as the metal is drawn out of the flange region and into the die.

Introducing these forces into equation (1) gives

$$\sigma_T\, t\, r_i\, \theta = kP\theta\,(r_o^2 - r_i^2) + \sigma_c\, \theta\,(r_o - r_i)t$$

$$kP\,(r_o^2 - r_i^2) = \sigma_T\, t\, r_i - \sigma_c\, t\,(r_o - r_i)$$

$$P = \frac{t\,(\sigma_T\, r_i - \sigma_c\, r_o + \sigma_c\, r_i)}{k\,(r_o^2 - r_i^2)} \qquad (2)$$

In the above equation σ_T and σ_c are the tensile yield stress at r_i and the compression yield stress between r_i and r_o. Since these are regions of biaxial stress (where the yield stress will differ from the uniaxial yield stress) and since the ratio of σ_T to σ_c varies between r_i and r_o, actual values of σ_T and σ_c cannot be assigned unless the varying amounts of radial and circumferential strain are observed. However, in the interest of obtaining a simple relationship, it is useful to use the well known uniaxial yield stress values for σ_T and σ_c, and to recognize that $\sigma_T = \sigma_c$ for ductile metals so that

$$P = \frac{t\sigma\,(2r_i - r_o)}{k(r_o^2 - r_i^2)} \qquad (3)$$

Equation (3) indicates that when the blank diameter is twice the die diameter ($r_o = 2r_i$) that forming will be by stretch rather than draw even if no flange restriction pressure is applied. This, of course, requires that the workpiece be thick enough so that buckling does not occur at a stress below the compression yield.

Since none of the previous discussion is dependent on whether the workpiece is in its original position or whether it is partly formed, and since it is merely necessary that a force W of sufficient magnitude be applied for force T to produce a yield stress at r_i, a more general statement of the pressure P which is just sufficient to prevent draw or is the maximum which would be employed in a draw operation is:

$$P = \frac{t\,\sigma\,(2r_i - r)}{k\,(r^2 - r_i^2)} \qquad (4)$$

where r is the radius at any time during the forming operation.

A sample calculation employing the dimensions of a 28-inch dome at the completion of draw forming from an .062" x 40" blank of 15,000 psi yield strength, gives P as 725 psi when $r = 17.5$ and $r_i = 15$ and k is assumed to be .2 .

APPENDIX B

THEORETICAL AND ACTUAL RESTRICTION PRESSURES IN DOME FORMING

In the interest of obtaining the flange hold-down pressure required for forming 57-inch bulkheads and thereby to establish the design strength of the tooling, an expression of the flange pressure was derived as*

$$P = \frac{t\sigma(2r_i - r_o)}{k(r_o^2 - r_i^2)}$$

where
t = blank thickness
σ = yield strength
r_i = inner flange radius
r_o = outer flange radius
k = friction constant

Since the above flange pressure in the above equation is the minimum required to prevent draw, an expression for flange pressure which permits draw will probably not be much less to avoid severe contour buckling of a workpiece with high ratios of diameter/thickness and depth/diameter. By adding a factor d, where $d < 1$, and defining r as the outer flange radius at any time (r_o being the original value), the equation becomes an expression for flange pressure as a function of flange radius, or as a function of draw which equals $r_o - r$. The flange pressure, P, during draw as given in the equation below is then a function of flange size, material thickness, yield strength, friction, and the factor d which is dependent on diameter/thickness and depth/diameter ratios.

$$P = \frac{t\sigma(2r_i - r)\,d}{(r^2 - r_i^2)\,k} = \frac{t\sigma(2r_i - r)}{(r^2 - r_i^2)k/d} \qquad (5)$$

For a given workpiece and contour configuration, t and r_i are fixed. Yield strength, σ, will not vary significantly since there is practically no thickness change (implying little strain work) near the flange. Unless lubrication is modified during forming k remains constant although its value is not known unless measured in a separate friction experiment. The flange radius, r, and flange pressure, P, are measurable variables and this

---

*Republic MR Report 63-85-1, G. Pfanner, June 25, 1964.

leaves d as the only unknown which may be variable.

In the interest of comparing the equation with actual values of P employed during forming of the 57-inch domes, a graph of high and low ranges of P in the last ten experiments is compared (in Figure B-1) with the value of P in the equation. A particular fixed value of k/d=.135 is employed to have the calculations fall in the mid-range of actual pressures. The comparison indicates that the formula and actual experience agree with reasonable closeness, that rising flange pressures are required to follow the empirical ("normal") depth-draw curve (Figure 19) which was the basis for selection of flange pressures during the forming process. Also, the relatively small difference between actual and theoretical curves implies only a small percentage variation in d during forming. Indeed, it raises the question whether the theoretical curve (d = constant) might not have been an effective guide to establish (or replace) the depth-draw curve which was the criterion for flange pressures employed during the 57-inch experiments.

Figure B-2 compares equation 5 with flange pressures employed in the EH forming of a 28-inch dome (experiment 28-62). In this case, a k/d ratio of .37 fits reasonably to the flange pressures actually employed during forming.

Since lubrication is similar in the above comparison between 57-inch and 28-inch domes, k can be considered equal. This indicates that the draw factor, d, is higher for the 57-inch dome which means that biaxial yield stresses in the 57-inch size are higher than in the 28-inch size. This is to be expected since the diameter/thickness ratio is higher for the 57-inch dome (710:1 versus 450:1) and a proportionately greater amount of stretch is required to avoid contour wrinkles in the finished dome.

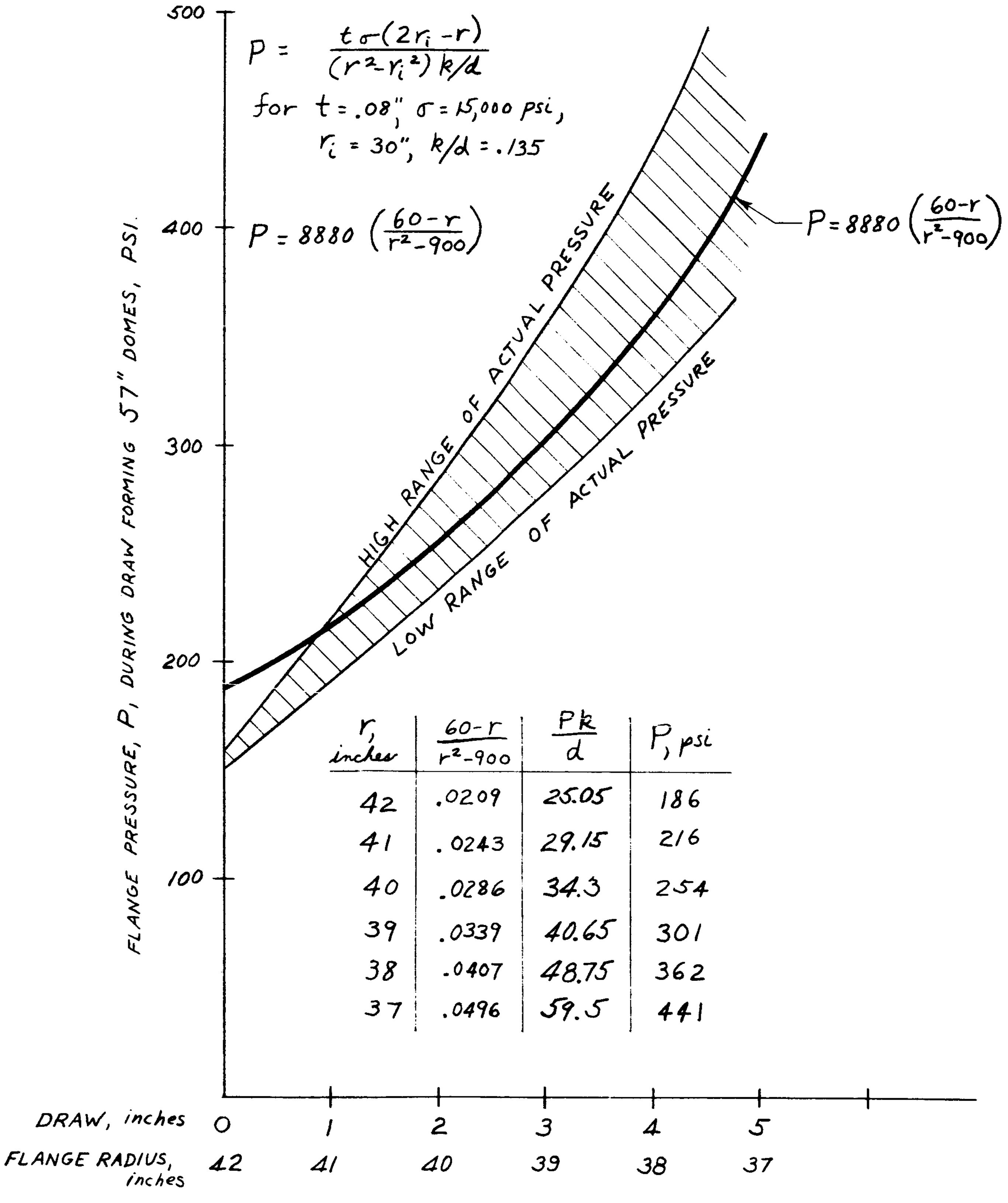

$$P = \frac{t\sigma(2r_i - r)}{(r^2 - r_i^2)\,k/d}$$

for $t = .08''$, $\sigma = 15{,}000$ psi, $r_i = 30''$, $k/d = .135$

$$P = 8880\left(\frac{60-r}{r^2-900}\right)$$

$$P = 8880\left(\frac{60-r}{r^2-900}\right)$$

r, inches	$\frac{60-r}{r^2-900}$	$\frac{Pk}{d}$	P, psi
42	.0209	25.05	186
41	.0243	29.15	216
40	.0286	34.3	254
39	.0339	40.65	301
38	.0407	48.75	362
37	.0496	59.5	441

COMPARISON OF ACTUAL FLANGE PRESSURE FOR 57-INCH BULKHEADS WITH DERIVED EXPRESSION FOR PRESSURE

FIGURE B1

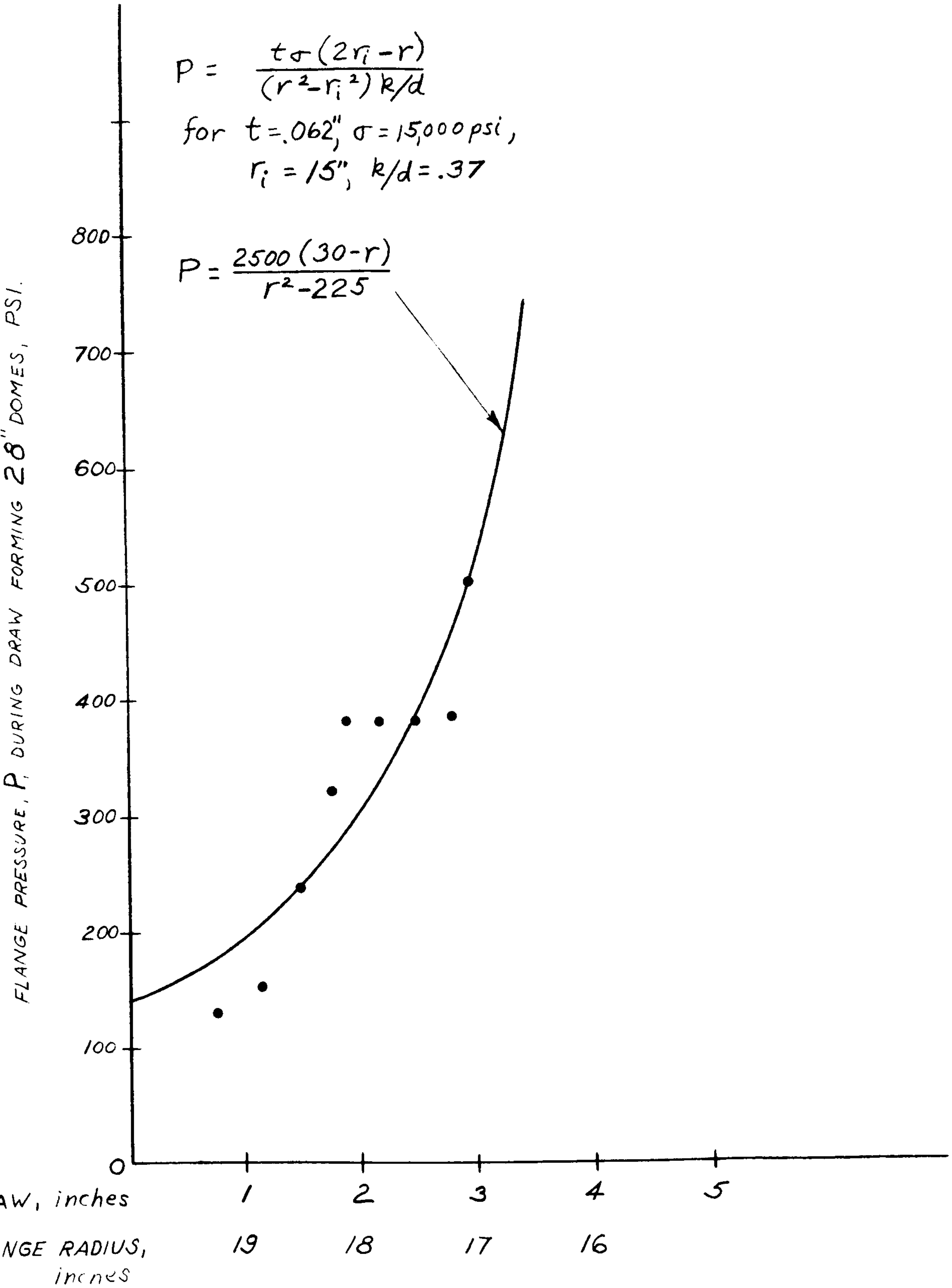

COMPARISON OF ACTUAL FLANGE PRESSURE FOR 28-INCH BULKHEAD (SPECIMEN 28-62) WITH DERIVED EXPRESSION FOR PRESSURE

FIGURE B2

APPENDIX C

CALCULATION OF DRAW RATIO

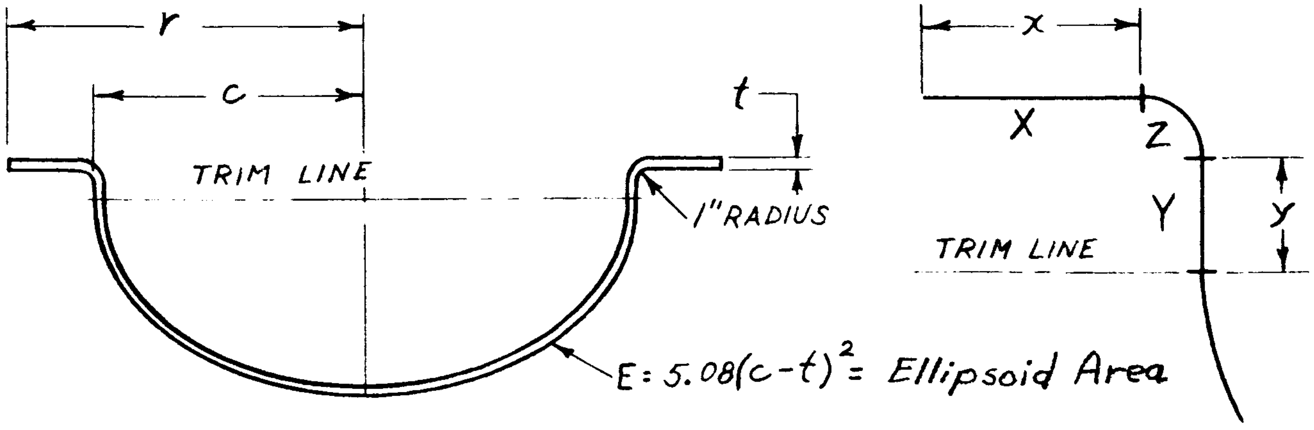

The ratio of the original blank area to the entire formed workpiece surface area is a good measure of the ratio of the draw.* This ratio is a valid index since it takes into account the effect of stretch as well as draw, and it is a measure of both which is really of interest. Stretch thins out the metal below the trim line whereas draw thickens the metal above the trim line. Therefore, stretch increases area whereas draw reduces area. The net area change will always be positive, but the closer the original area is to the formed area, the more effective the draw operation. By this definition, the maximum (but unattainable) draw ratio is 1.0.

For a typical 57-inch dome and for $t = .08''$, $r = 37.1$, $c - 28.5$, $y = 1.125$ and $x = 7.6$, the respective areas E, X, Y, Z are:

E = 4093
X = 1590
Y = 200
Z = 308
Total = 6191 square inches

Since the area of the original 84-inch diameter blank was 5550, this is a draw ratio of 5550/6191 = .90.

---

*Others have defined draw ratio as blank diameter/die diameter.

For a 28-inch dome (Specimen 28-62) and $t = .062$, $r = 17$, $c - 14.05$, $y = .00$ and $x = 2.0$, the areas are

E = 974
X = 201
Y = 0
Z = 144
1319

Since the area of the original 39.75-inch diameter blank was 1240, this is a draw ratio of 1240/1315 = .94.

The higher draw ratio of the 28-inch dome (.94 versus .90) confirms the observation in Appendix B that flange pressure values indicated that a higher draw factor was applied in forming 28-inch domes.

APPENDIX D

CALCULATION OF HYDRAULIC FORMING WORK

The work performed in hydraulic metal forming is the integrated product of the forming pressure and the fluid volume displacement ($W = \int PdV$). This is experimentally obtained by measuring forming pressure and dome depth at several intervals during the forming operation, and then calculating volume from the dome depth by assuming that the workpiece shape is a spherical segment of ever decreasing radius. This is an accurate assumption since the pressure is hydrostatic and the strength of the workpiece remains fairly uniform over its area since center thinout is compensated by the increased strength of work hardening. After the workpiece contacts the die at the dome center, forming pressure continues to increase and a final volume measurement is calculated as that of the finished ellipsoid.

Plots of experimentally measured depth (h), calculated volume (V) and measured pressure (P) in Figures D1 and D2 give the work in hydraulically forming a 57-inch bulkhead from .080-inch aluminum of 15,000 psi yield strength as 393,000 joules. This value is obtained as the area under the P-V curve.

It is, of course, possible to get a good approximation of hydraulic forming work without actual experiment if the draw ratio of the operation is so high that the entire workpiece can be assumed to be at yield stress circumferentially and radially. Actually, this is not so in the region near the workpiece trim line and actual work would be lower than calculated from the geometry and pressure formulas. These formulas,

$$P = \frac{2\sigma t}{r} \quad \text{and} \quad V = \pi h \left(\frac{c^2}{8} + \frac{h^2}{6} \right)$$

where σ = yield stress
t = workpiece thickness
r = workpiece radius
h = dome depth
c = die diameter = fixed
h, r, c are related by $r = \frac{c^2}{8h} + \frac{h}{2}$

are also useful to obtain the work required for hydraulic forming of 28-inch by ratio to the 57-inch work value of 393,000 joules. (Since data of h vs P was not available for the 28-inch dome, it could not be calculated directly.) Comparison of the formulas show that for work-pieces of equal yield strength and formed by equal draw-stretch, the forming ratio is $\frac{t}{L^2}$ where L can be either c, h, or r. Therefore, for

	t	c	W
57" Dome	.080	57	393,000
28" Dome	.062	28	

$$W_{28''} = W_{57''} \frac{t_{28}}{t_{57}} \left(\frac{c_{28}}{c_{57}} \right)^2$$

$$W_{28''} = W_{57''} \frac{.062}{.080} \left(\frac{28}{57} \right)^2 = 393,000\ (.187) = 73,491 \text{ joules}$$

As a check on the above value of deformation work for the 28-inch dome, a separate calculation was made in which the strain work of flange compression and dome thinout were added to obtain total work. This method gave a work calculation of 68,000 joules which can be considered as close agreement with the above.

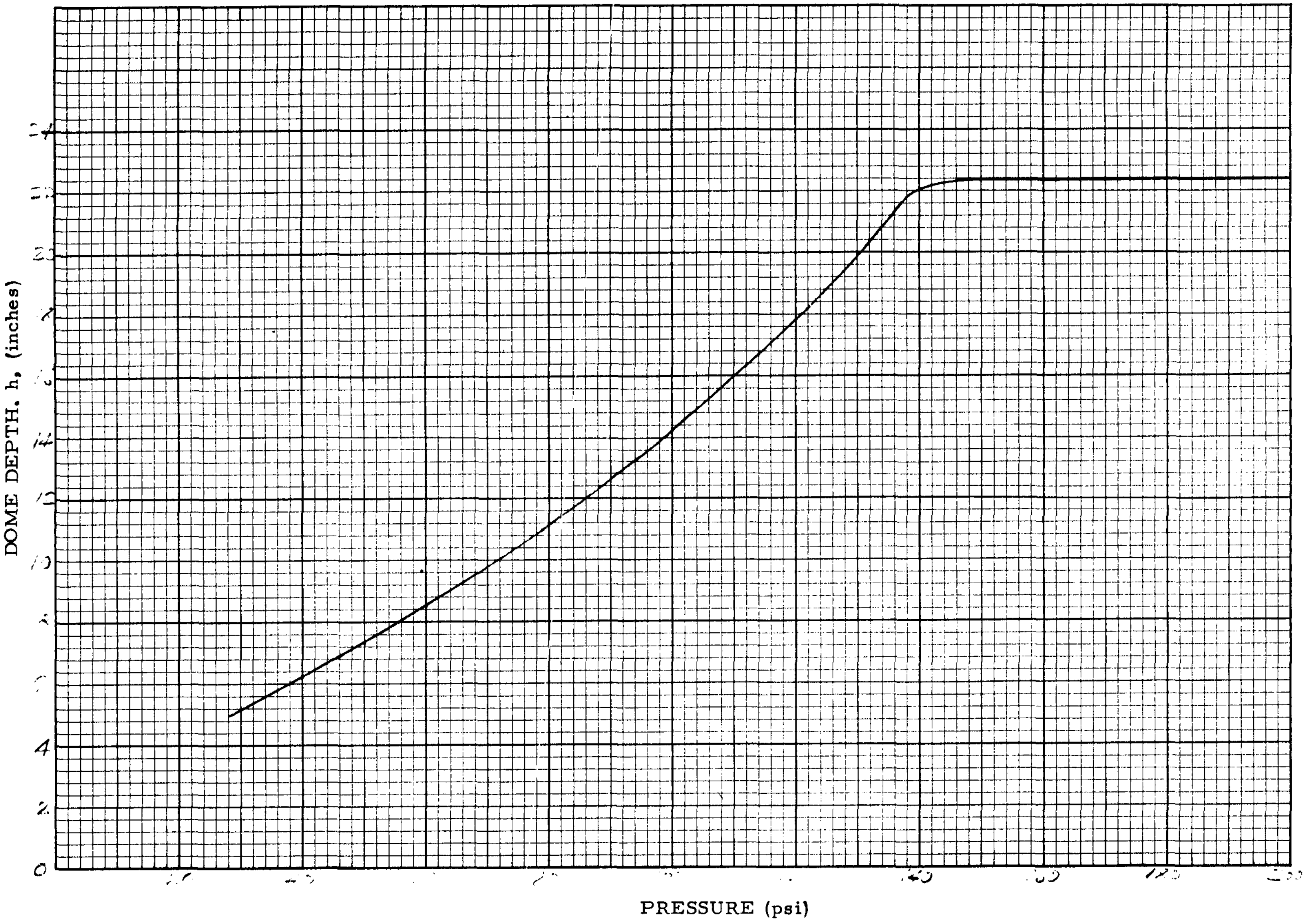

TYPICAL FORMING PRESSURE VERSUS DOME DEPTH FOR 57-INCH BULKHEADS
FIGURE D-1

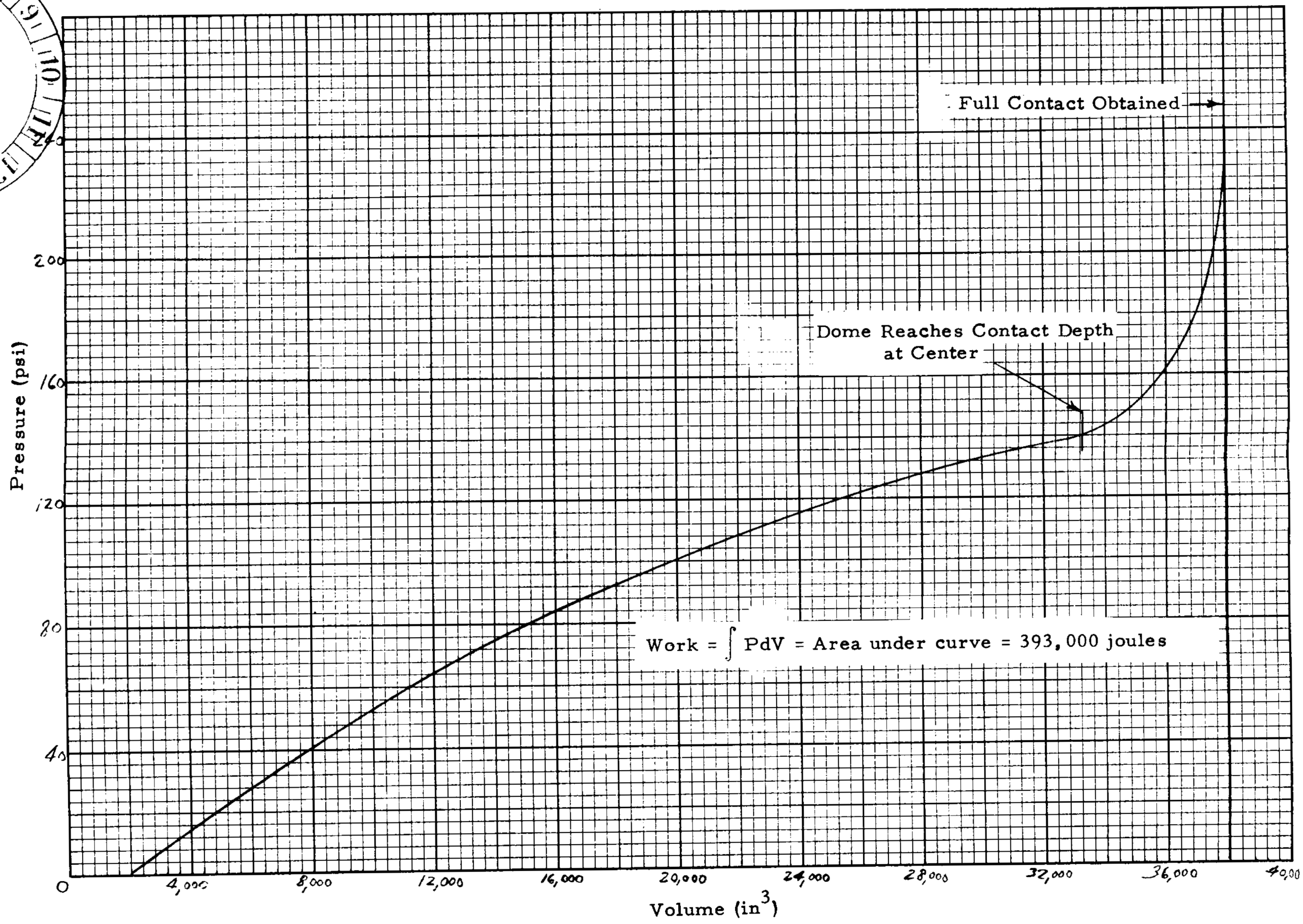

VOLUME VERSUS FORMING PRESSURE TO OBTAIN FORMING WORK
FIGURE D-2

APPENDIX E

PRESS DOME FORMING

A field trip to American Car and Foundry (ACF), Milton, Pennsylvania conducted by F. J. Hoppe of Republic's Manufacturing Research Department on July 12, 1963 was made to obtain manufacturing procedures as background for the production of the 57-inch and 105-inch bulkheads. The results of the trip are summarized below.

At ACF, a discussion was held with Mr. C. Reedy, Plant Manager, concerning the procedure employed to manufacture 96-inch diameter, 35-inch deep, 2014 aluminum alloy (.100" minimum thick) Martin domes.

Martin domes were manufactured in a 4000-ton double acting Lake Erie press. The machine had a clear platen area 160" square between guide post. A Lee Wilson radiant type oven, 1200°F (10' x 10' x 10') with a quench tank were employed for the heat treatment and the annealing of the aluminum blanks. A furnace with a protective atmosphere, (2000°F) conveyer type, 15' across, 3' high and 60' long adjacent to the press was used for hot press forming nozzle type areas of oil tank cars.

The parts were manufactured with an open drawing type female with a secondary draw ring and a full contour male punch.

Blanks were manufactured from both Alcoa and Reynolds material and had to be machined to the .150 ± .005 thickness from thicker material. Both these materials formed equally well. The starting blank die was 122 inches. During the forming operation, the blank was trimmed when required to maintain a circle as the blank did not pull evenly even with the pressure controlled secondary draw ring. The finished formed blank diameter with trims which varied from part to part was approximately 104 inches in diameter.

The first ten pieces were formed in stages by sometimes greasing the blank and at other times by removing the grease to hold the blank back and to hold out the shrink wrinkles. The part was formed to approximately 18 inches deep and then cold worked annealed; that is, the short time anneal of 650°F and air cool instead of the full anneal 775°F and furnace cool 50°F per hour to 500°F. The part was then formed to 24, 30, 31 and 34 1/2 inches depth with the short time anneal employed after each depth. These first parts still had some shrink wrinkles and these were ironed out by spinning the parts on a Bullard lathe. Then the parts were solution heat treated and finished formed, the last 1/2 depth in the draw press in the SW condition. Parts were then aged.

Martin later found that the parts which had been spun had hairline cracks. As the manufacturing procedure improved, the spinning operation was eliminated and no further cracking appeared. The draw ring pressures varied between 600 and 700 tons and the ram pressure was approximately 250 to 275 tons.

A record was kept of the forming procedure and pressures of each part. Later examination showed considerable variation between pressure and respective depth for each part. The process was more "an art" than a standard forming procedure.

After heat treat, the domes were checked on a male inspection jig. Depth varied by ±.060" and ±.010" in diameter. Contour was not inspected except in a port area which varied ±.030". Thickness at the center was .114 inches and at the side, approximately .122 inches for an .008-inch thickness variation.

Mr. Reedy's view concerning forming similar domes in thinner gages was that several deep drawing operations (with successively deeper and smaller diameter tools) would be required to maintain gage thickness.