GENERAL DYNAMICS
Convair Division
Life Sciences

LIQUID/GAS SEPARATION MECHANISMS

64-26231

13 September 1965

LIFE SUPPORT SYSTEM FOR SPACE FLIGHTS OF EXTENDED TIME PERIODS

NAS 1-2934

Prepared for

NASA/Langley Research Center
Langley Station
Hampton, Virginia 23365

Prepared by S. McCunney/J. Burnett

Approved by B. G. North
for D. Krause
Deputy Program Manager

Approved by R. C. Armstrong
R. C. Armstrong, M.D.
Program Manager

TABLE OF CONTENTS

LIST OF ILLUSTRATIONS

1/INTRODUCTION

Liquid/gas separation mechanisms for manned spacecraft have traditionally presented major problems in ground test and flight applications. In selecting the liquid/gas separation mechanisms for the prototype life support system both static and dynamic techniques were included, each to be produced in several configurations for the various applications. This approach was taken to assure a broad range of experience from which significant information could be obtained in a minimum of program time. The approach has proven to be a valid one.

This report presents a summary of the experiences dealing directly with the several liquid/gas separation mechanisms employed in applications specifically involved with air-water separation. The report summarizes requirements, describes types of mechanisms employed, outlines developmental problems and solutions attempted, briefly discusses current performance of the various units, and recommends actions for continued development as required.

2/SUMMARY OF LIQUID/GAS SEPARATION - LSS

2.1 REQUIREMENTS

Requirements for liquid/gas separation exist in a wide variety of functions within the prototype LSS. Each requirement includes operating capabilities under zero gravity with performance demonstration at one-G. Specific mechanisms are required for liquid/gas separation in zero gravity to complete the following functions.

1. Cabin Air Humidity Control
2. CO_2 Reduction Product Water Removal
3. Electrolysis Unit Product Gas Removal
4. Evaporation Water Recovery
5. Urine Collection
6. Waste Wash Water Collection

Static mechanisms which accomplish separation by directing entrained liquid droplets to porous plates are employed by the first three. Dynamic separation mechanisms which produce a centrifugal force and accomplish separation by directing entrained liquid droplets into a probe at the inner surface of a diverging-converging, rotating drum are employed in the last three functions.

2.2 PROBLEMS ENCOUNTERED

Each application has experienced development problems of varying severity. Modifications have been required for each installation ranging from virtual redesign to simple repair. Each application has performed adequately in final system tests but, in varying degree, has added to an over-all concern regarding the relatively underdeveloped status of liquid/gas separation.

The cabin air-water separator was by far the most troublesome. Plate leakage, although ultimately reduced in both frequency and magnitude, existed throughout the program. The sintered metal porous plates are delicate and easily damaged in fabrication, during handling, and in assembly operations. In addition, the durability of the assembly remains in question with respect to degradation of porosity caused by corrosion and contamination.

The evaporation unit separator was the next most troublesome. Torque limitations of the air turbine drive combined with design and configuration problems associated with the water pickup probe (pitot) severely limited operation and efficiency. Correction of these difficulties was virtually impossible due to the unitized (sealed) design of the case.

The urine and wash water separators experienced excessive vibration, limited torque and bearing degradation. Modifications were relatively effective but are not considered complete.

The CO_2 reduction unit separator has proven relatively satisfactory primarily due to its heavy, rigid construction and its inherently simple separation task, aided by a liberal pressure gradient and gravity. The only significant problem involved loss of plate porosity through carbon contamination resulting from upstream component failures.

2.3 RECOMMENDATIONS

It is recommended that a program be undertaken at this time to specifically develop new or modified liquid/gas separator configurations for the LSS in its current prototype status with further development to a flight configuration. It is considered that the experience at this point has been sufficiently definitive to both support the recommendation and to provide a practical basis for rapid and economical development. It has been demonstrated that random developments at the component level will not produce either adequate unit performance or satisfactory integrated performance.

3/STATIC SEPARATORS

3.1 CABIN AIR-WATER SEPARATOR

The cabin air-water separator controls cabin humidity by removing water droplets from the air stream in the cabin air duct after they have been condensed and agglomerated by the system "A" cabin air heat exchanger. Condensate is continuously transferred to the CT-2 collection tank of the water management system by an electrically-driven pump which matches the catch rate of the separator, Reference (1). The basic separation function is performed with no moving parts (static), by directing entrained water droplets to porous metal plates which provide a liquid/gas interface through capillary action permitting water to flow through the plate to the separator pump. If air pressure forces are less than capillary forces, water will flow through the plates to the separator pump inlet. The air will be excluded.

Efficiency is measured by the percentage of condensed water which is removed by the separator, and is directly related to the separator configuration for a given water droplet size, distribution and air velocity. The basic configuration used in the life support system was developed by the Electromechanical Division of TRW but was modified by Convair to improve performance, reduce air leakage, and provide adequate pumping. Although the anticipated moisture output of a four-man crew is 19.6 lb/day, the separator specification required a peak water removal capacity of 3.7 lb/hr from a 900 lb/hr air stream in a 10 psia cabin. The allowable entrained moisture in the discharge air was 0.15 lb/hr, corresponding to an efficiency of 96%.

3.1.1 CURRENT CONFIGURATION. The water separator and header assembly are modifications of the original TRW configuration, consisting of a flanged housing which is installed in the vertical section of the cabin air duct downstream of heat exchanger "A", and an array of porous plate assemblies. The porous plate assemblies are aligned with the duct but baffles are employed to deflect the air and direct entrained water droplets to the plates, where they are "swallowed" by capillary action, Figures 1, 2, and 3. Each double plate assembly is made of two porous sheets of sintered nickel which are attached to a supporting frame to form a water cavity. End plate assemblies have only one porous sheet, the side facing the separator housing being solid metal. The water cavities are connected at the top and bottom to common Tygon manifolds which lead to the pump. The number of double plates has been reduced from nine to four to accommodate the baffles. Net flow area was reduced from 95 sq.in. to 38 sq.in. and the air makes a 180° turn at each of the eight baffles.

The TRW pump failed to deliver water at the required discharge pressure, was not self-priming and was found to lose prime at a suction head of 0.3 psig. The pump was removed from the instrument and control panel and replaced with a modified Gorman Rupp oscillating pump, Figure 4. An additional pump of this type was also installed to remove liquid carry-over from the sump downstream of the separator, and return it to the duct upstream of the heat exchanger.

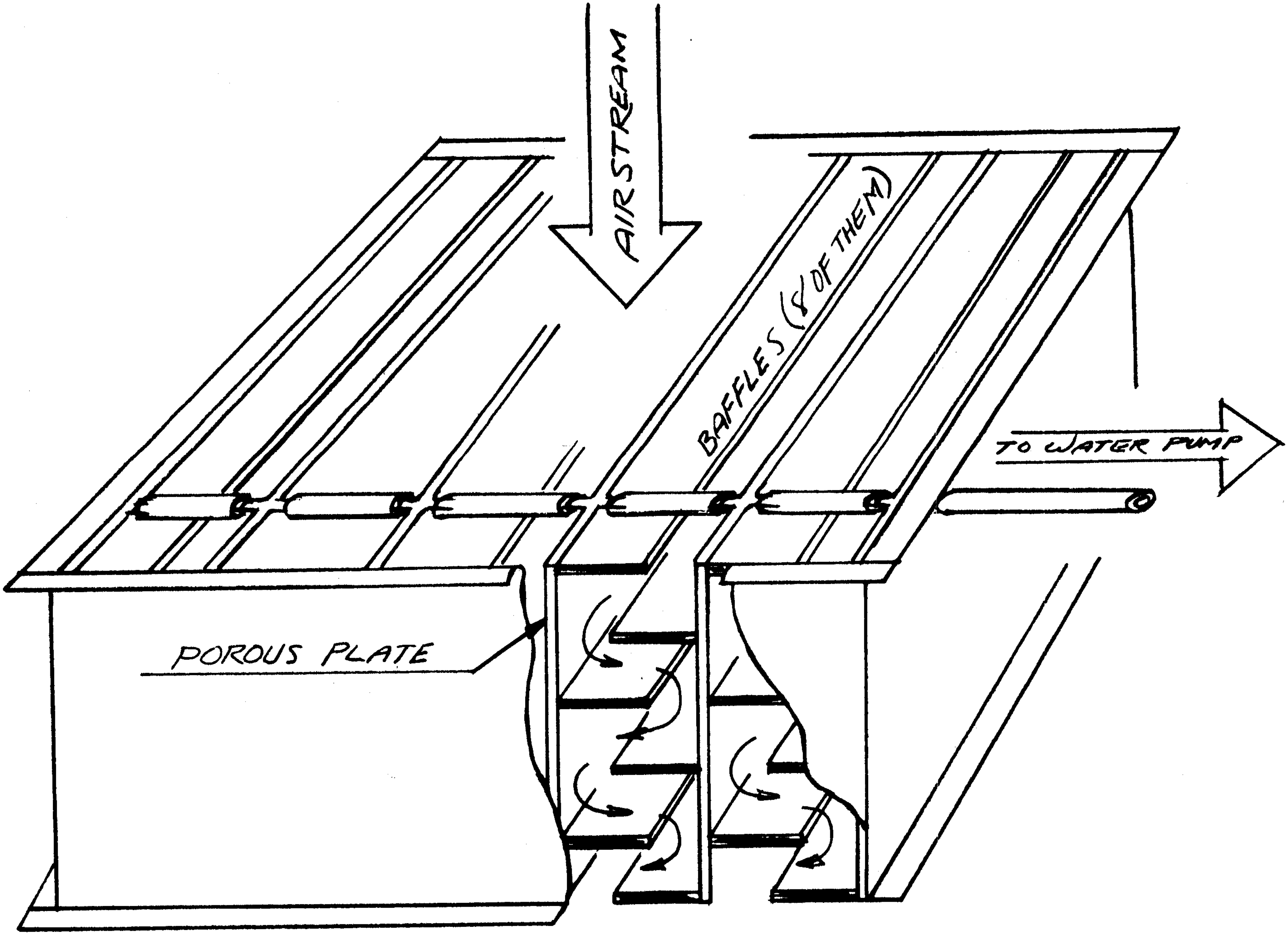

Figure 1. Current Configuration

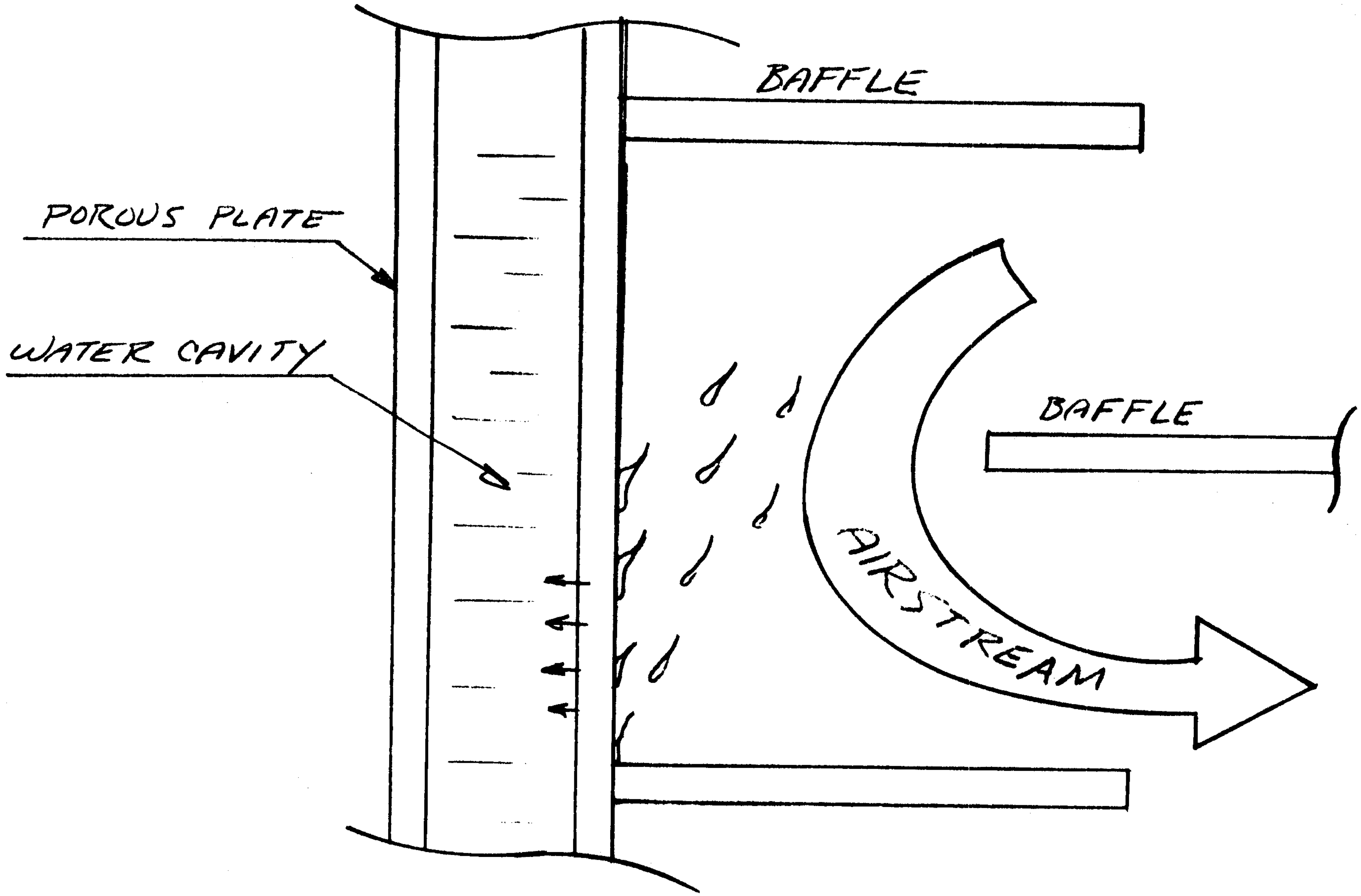

Figure 2. Air Deflection

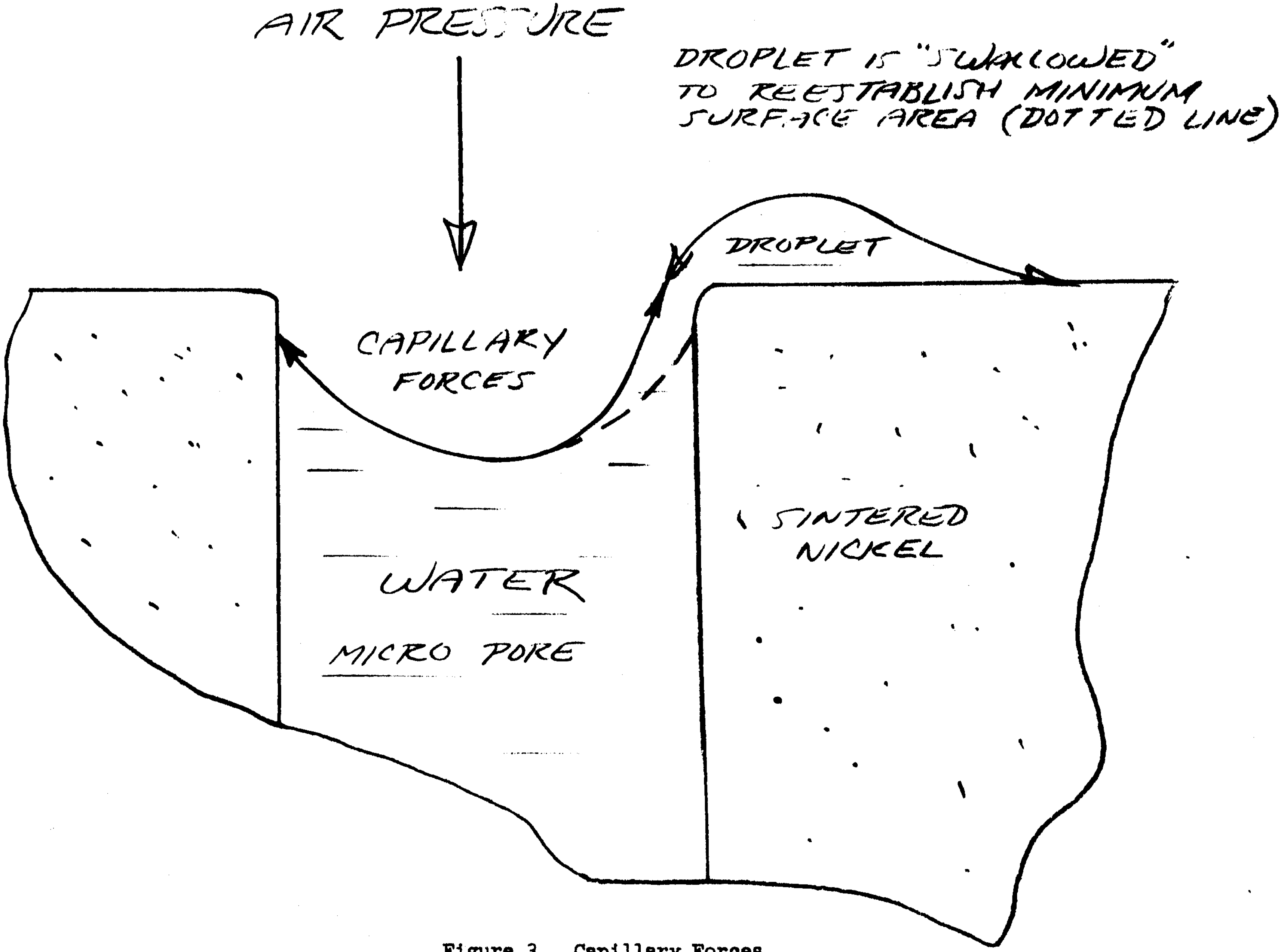

Figure 3. Capillary Forces

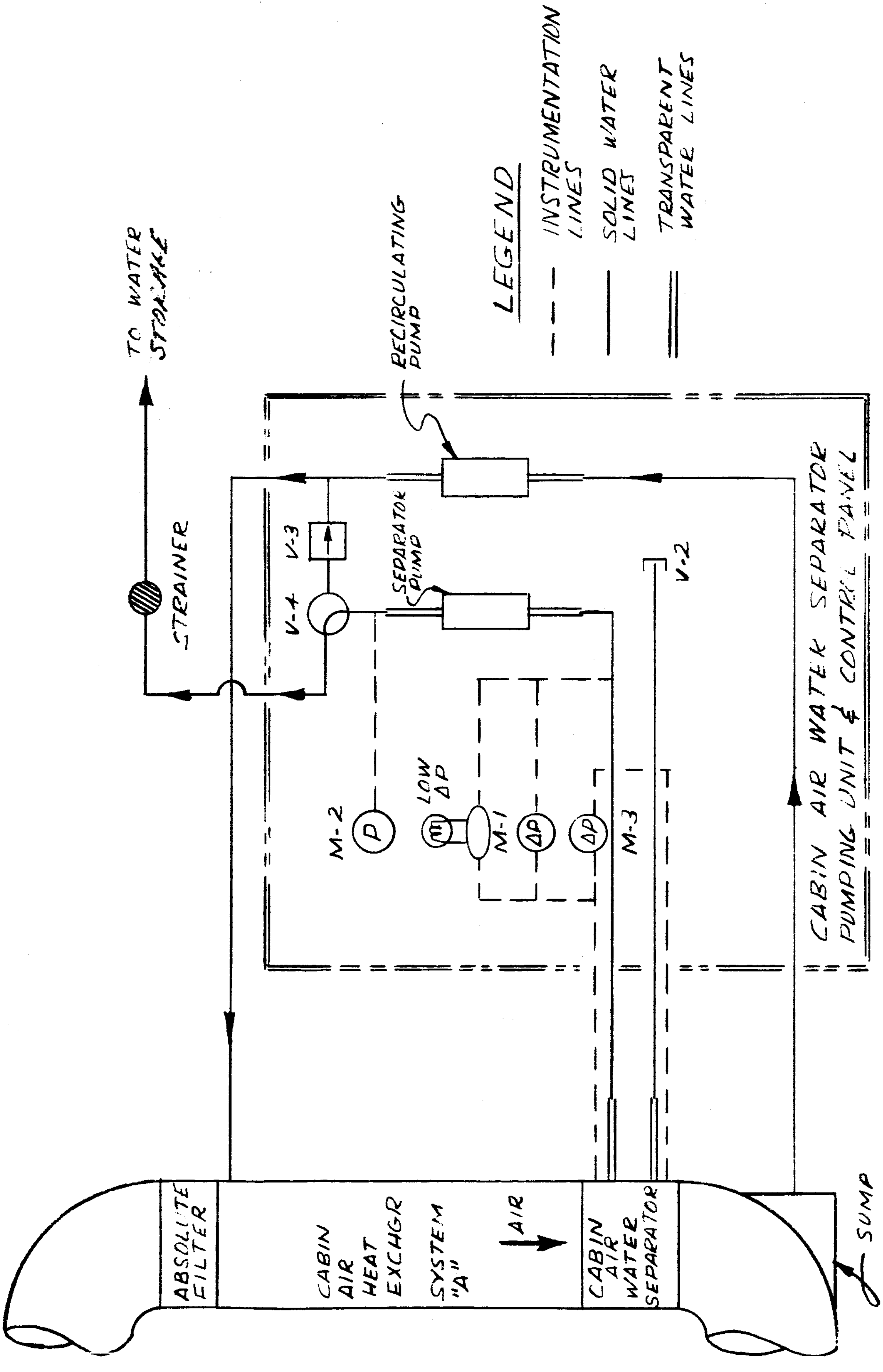

Figure 4. Cabin Air-Water Separator Schematic

3.1.2 DEVELOPMENTAL HISTORY. In April 1964, TRW contracted to develop a separator with a scheduled delivery date of 7 August 1964. By 6 July a configuration which appeared to meet the specification requirements had been developed and tested at TRW. Attempts to rerun these tests for formal acceptance by Convair were abandoned because of difficulty with the test specimen and the TRW test facility. The configuration employed stainless steel wool packing between the porous plate assemblies, contained in wire mesh. Chevron-shaped grooves in the end plates were intended to impart a "V" form to the packing so that water droplets might migrate toward the porous plates under the influence of the dynamic pressure of the air stream, Figure 5.

The separator assembly was left at TRW and the transition duct and sample porous plate assemblies were shipped to Convair. When tested at Convair, most of the plate assemblies showed severe air leakage at 1 psi differential pressure due to ineffective or damaged solder between plate and frame. Small specimens were fabricated from the TRW plates to evaluate both an adhesive bonding, and attachment by welding. A satisfactory bond was obtained with FM 1000 adhesive on a 0.187-inch frame for the sealing surface in lieu of the 0.09 inch of the TRW design. Porous plate material and the remaining parts were shipped from TRW 3 December, and new plate assemblies were fabricated by Convair using adhesive bonded chem-milled plates.

The bonding technique has proven to be workable but plate construction is such that cracking and puncture occur rather frequently during the bonding process and in subsequent handling operations. Further complicating the problem of plate integrity is the difficulty in obtaining satisfactory control and test of plate quality. These factors coupled with the inherent difficulties in maintaining uniform and continuous plate wetting during operation have resulted in a continuing plate leakage problem throughout the test program.

Two new configurations which produced a more positive flow direction were fabricated and tested for comparison with the original separator assembly which employed the open matrix, metalic mesh chevrons to direct the entrained water onto the plates. The first essentially added a series of solid plate "V" baffles to the original metal mesh chevrons. The second discarded the metal mesh "agglomerator" and substituted a series of offset, straight (flat plate) baffles to produce an air flow labryinth across the separator.

Due to the lack of definitive information concerning the original pump, tests were conducted to determine its pumping characteristics, Figure 6. These tests showed that the original pump could not meet the desired capacity of 3.7 lb/hr with a suction pressure of 3 psig and discharge pressure of 5 psig. The pump was not self-priming and would lose prime when air bubbles were introduced to the inlet. These deficiencies are directly related to the very low catch rate of the separator and were inherent to the pump design, which attempts to accommodate this catch rate.

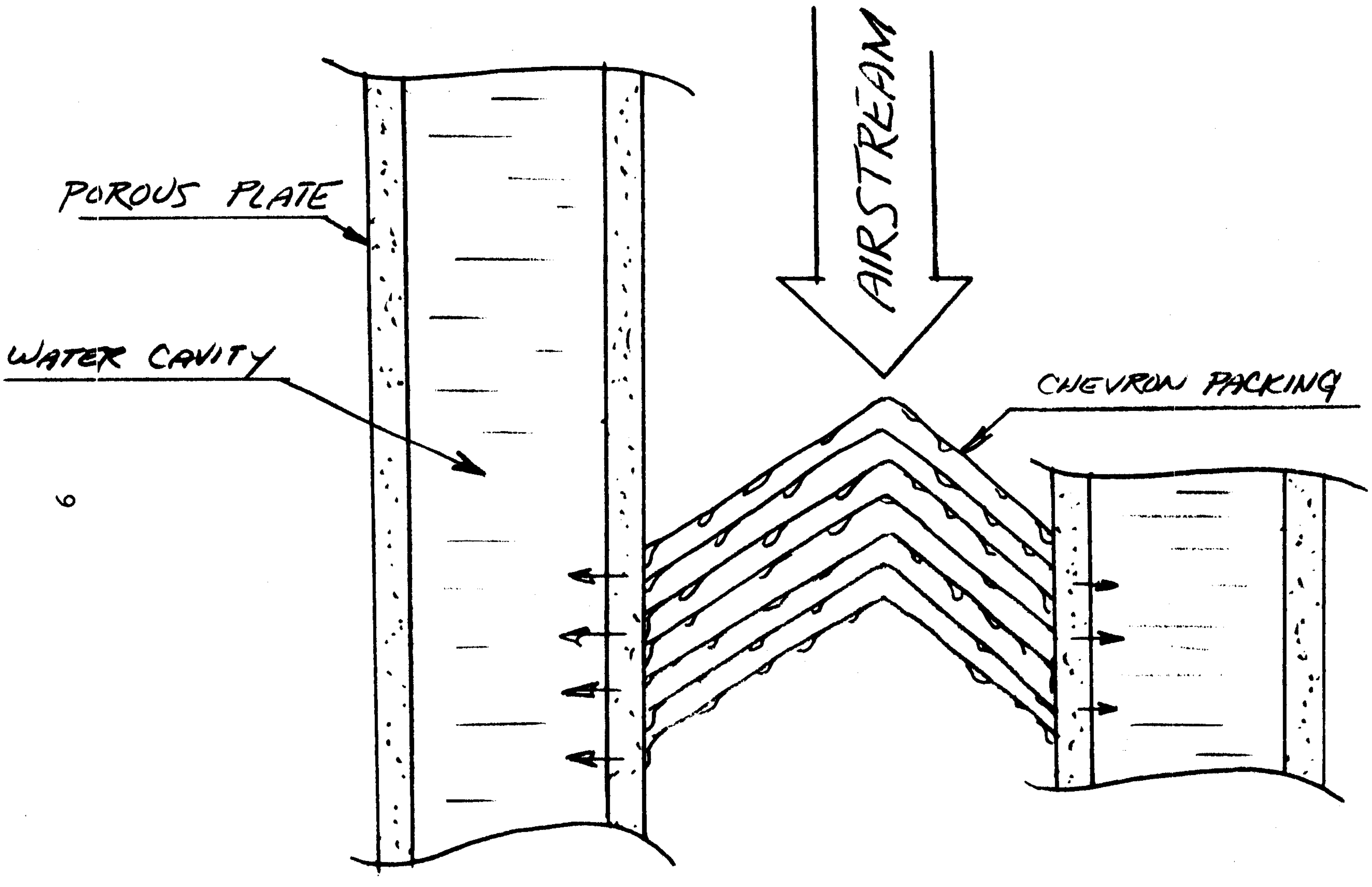

Figure 5. Chevron Packing

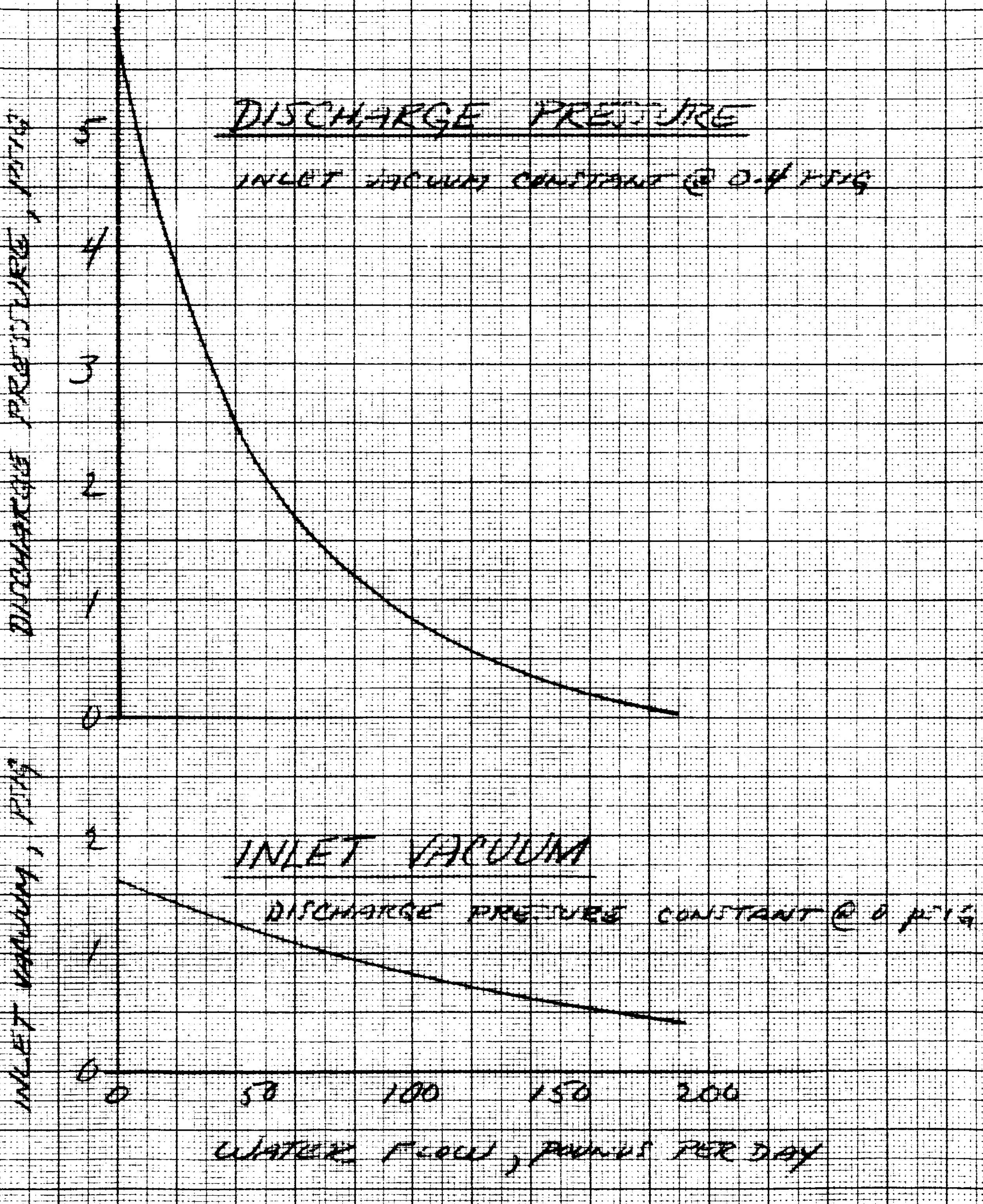

Figure 6. TRW Pump Capacity

Explanation of the observed characteristics is as follows:

1. Failure to pump to design pressure: Deformation of the diaphragms at 5 psig reduced the volume per stroke below the 0.9 cc required to deliver 3.7 lb/hr. Deformation at 5.7 psig completely canceled pumping action and the effective stroke was zero.

2. Failure to pump against 3.0 psig vacuum: The effective stroke was reduced to zero by the inlet pressure bias, evidence that the bias worked as intended, but with excessive sensitivity.

3. Failure to self-prime: The volume per stroke was extremely small compared to the total volume of the pump chambers, check valve cavities and empty inlet lines - a ratio of about 100:1. The pressure change per stroke was proportional to the volume ratio, or about four inches of water for full pump stroke. This was the cracking pressure of the check valves so that the pump would not self-prime.

4. Loss of prime due to air bubbles: Prime is lost if the total volume of air bubbles in the inlet line and pump reduces the pressure change per stroke to cracking pressure of the check valves. The tendency is aggravated by the reduction in effective stroke when the pump is working against a vacuum.

As a result of this investigation the original pump was replaced by a Gorman Rupp solenoid-driven, oscillating, two-stage, bellows pump. As shown on Convair Drawing 64-26177, an adjustable controller was installed in the separator pump electrical circuit to permit manual adjustment of pump displacement and thus adjustment of separator plate Δ P. An additional pump of the same type was added to the circuit to recycle the water carry-over collected in the sump downstream of the separator, back to the inlet side of the condensing heat exchanger.

3.1.3 PERFORMANCE. Of the three separator configurations evaluated in the test bed during the test program conducted at Convair, the final configuration was found to have 50% better efficiency than the original configuration when installed for the 10 psia demonstration test of 15 July 1965, Table 3.1.3. It is noted that a considerable water carry-over was re-evaporated in the discharge duct during all tests. When an allowance is made for this re-evaporation, the apparent efficiency of the installation is significantly better than the efficiency of the separator alone. The apparent efficiency attained by the straight baffle configuration was 95.5%, primarily because the reduced cabin pressure permits a greater absolute humidity in the discharge duct.

3.1.4 RECOMMENDATION. The static porous plate cabin air-water separator proved to be leakage-prone throughout the entire program. The sintered metal is delicate and easily damaged in fabrication and handling, and the durability of the plate-to-frame bond remains a question. In addition, long-term testing is likely to reveal other expected problems such as corrosion and degradation of plate porosity.

These known and suspected shortcomings of this static separator justify study of other static separation techniques in conjunction with serious consideration of a rotating dynamic separator for cabin air systems.

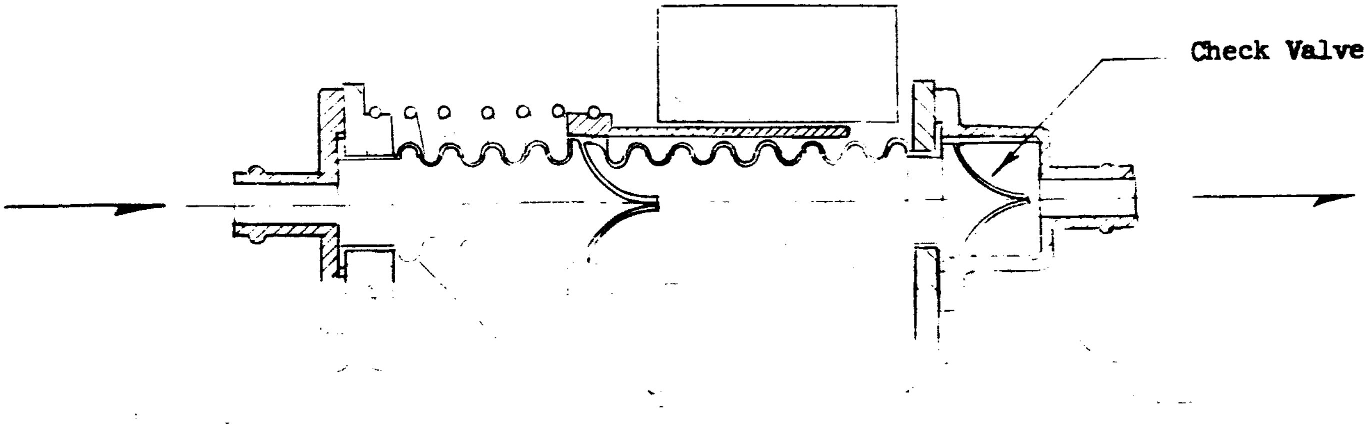

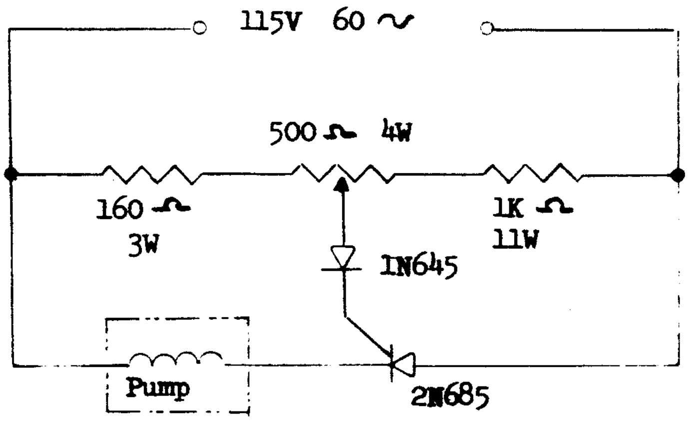

Pump Rating

Parameter	Maximum Capabilities (1)		Nominal Operation (2)
	No. 1 Base Pump	No. 2 Pump and Control	No. 3 Pump and Control
Inlet Suction (psig - negative)	1.8	2.5	1.5
Discharge Pressure (psig - positive)	4.75	5.0	1.5
Delivery (pph)	240.0	190.0	2.0^{+3}_{-2}

(1) Each value independently obtained; i.e., for No. 1, delivery was obtained with discharge at 0 psig and inlet at or above 0 psig.

(2) Values are simultaneously obtained.

Figure 7. Modified Gorman Rupp Pump and Control

Table 3.1.3. Cabin Air-Water Separator Test Results

Date Configuration Cabin Pressure, psia	5 January 1965 Chevron Packing 14.7	8 February 1965 "V" Baffle 14.7	15 July 1965 Straight Baffle 10.0
Inlet Duct:			
air flow, lb/hr	1630	1192	756
dry bulb temperature, °F	71.5	77.5	64.3
wet bulb temperature, °F	60.5	60.9	49.9
rel. humidity, %	54.0	37.4	59.5
abs. humidity, lb/lb dry air	0.00885	0.00755	0.0109
total moisture input, lb/hr	14.40	9.00	8.25
Heat Exchanger Discharge:			
dry bulb temperature, °F	42.5	41.3	32.0
wet bulb temperature, °F	42.5	41.3	32.0
rel. humidity, %	100	100	100
abs. humidity, lb/lb dry air	0.00573	0.00548	0.00545
water vapor output, lb/hr	9.35	6.54	4.13
water condensed, lb/hr	5.05	2.46	4.12
Separator:			
water separated, lb/hr	1.28	1.36	1.52
water trapped, lb/hr	0.17	0.06	0.07
water leakage, lb/hr (estimated)	0.50	0.18	trace
Discharge Duct:			
dry bulb temperature, °F	48	46	44
Efficiency, % = $100 \times \frac{\text{water separated}}{\text{water condensed}}$	25.4	55.2	36.8
Apparent Efficiency, % $100 \times \frac{\text{water separated}}{\text{water removed}}$	65.5	85.0	95.5

3.2 CO_2 REDUCTION UNIT WATER SEPARATOR

The steam formed in the Bosch and Sabatier reactors of the CO_2 reduction unit is liquefied in a glycol-cooled condenser and removed from the system through a porous plate water separator. As in the cabin air-water separator, capillary action of the porous plate maintains a gas-water interface which seals in the gas against system pressure but permits product water to flow through as it is formed. System gases are recycled through the Bosch reactor to achieve the desired process rate with a reactor of reasonable size, and if the product water is not removed the reaction would cease. Recovery and storage of product water is essential to the long-term economy of the cabin atmosphere, oxygen regeneration being accomplished by the electrolysis of water from storage.

The separator must accommodate a large range in gas flow, the recycle rate in the Bosch mode of operation being about 75 times the methane flow from the Sabatier reactor. Since the nominal water rate is 1.2 cc/min in Sabatier and 2.4 cc/min in Bosch, the liquid water content of the gas is about 38 times greater in Sabatier than in Bosch.

3.2.1 CURRENT CONFIGURATION. The water separator utilizes a single sheet of porous sintered nickel, mounted between neoprene gaskets and clamped in a two-piece sandwich like housing. When securely bolted together the assembly forms a leak tight, wire-packed gas passage with large intake and discharge manifolds, and a water cavity served by two smaller manifolds. The water manifolds are used to fill the water cavity and wet and seal the porous plate prior to use, as well as to remove product water. The separator is installed horizontally so that the water droplets which form on the wire packing are eventually directed to the porous plate by the force of gravity.

Water flows from the separator to an expulsion tank which can hold several hours' of water production, the water and gas chambers of the tank being separated by a flexible spring-loaded diaphragm. Check valves are installed in the water inlet and delivery lines so that water can be periodically expelled by manual operation of a pneumatic valve which admits pressurized nitrogen to the gas chamber of the tank. The expelled water is directed to collection tank CT-2 of the water management system.

3.2.2 DEVELOPMENTAL HISTORY. The TRW separator that came with the reduction unit was functionally identical to the current separator and worked properly throughout the Convair test program until a high temperature carbon filter failed, blocking the separator with carbon and making it inoperative. The replacement separator was patterned after the original, but with a better bolt circle and larger liquid manifolds.

The TRW water pump was not self-priming and would lose prime if gas bubbles were introduced to the pump inlet. Since the gas side pressure of the water separator is always positive, the pump was replaced with an expulsion tank which has the added advantage of reliable delivery to any tank pressure that does not exceed the regulated pressure of the nitrogen expulsion gas.

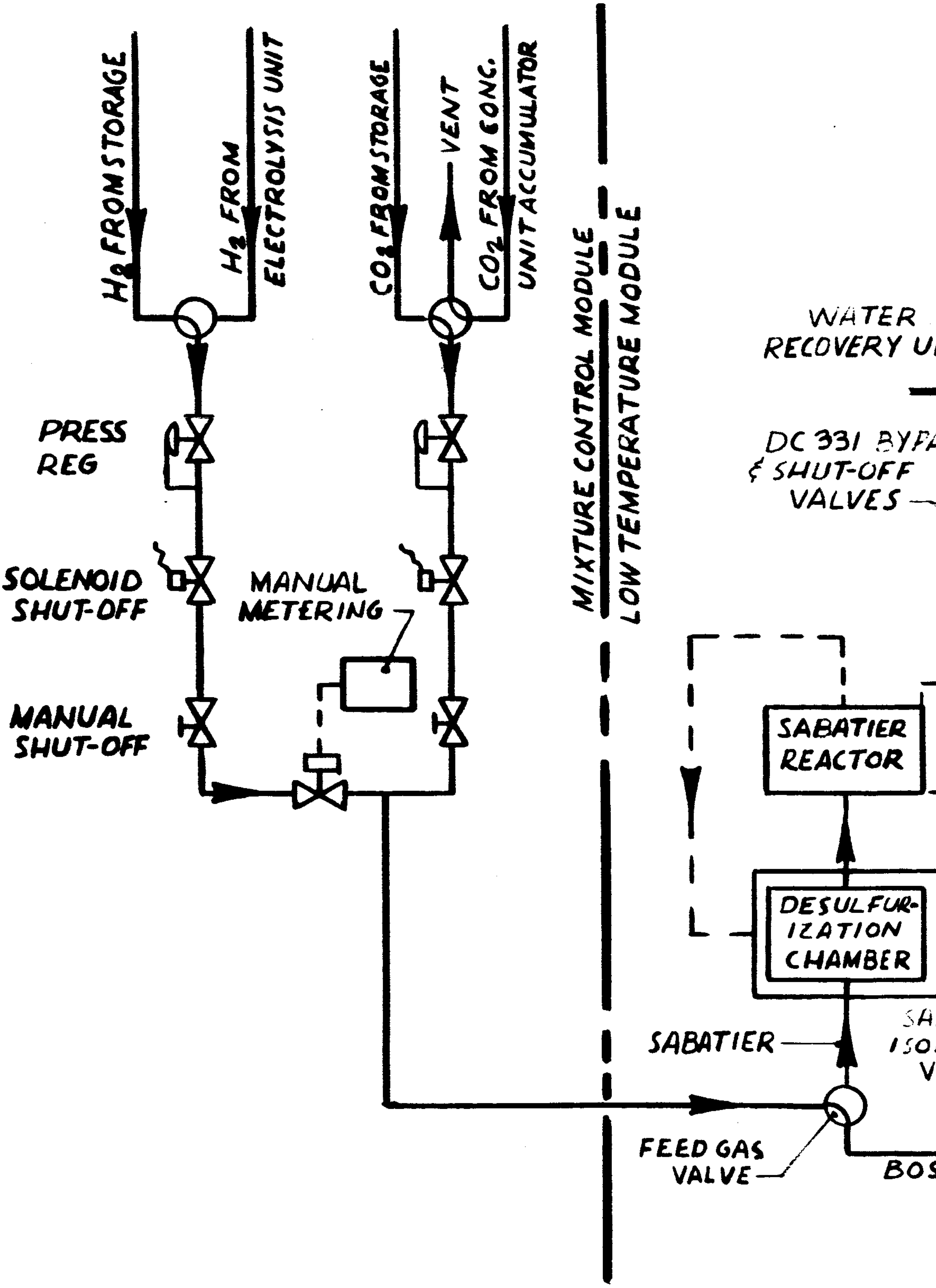

H₂ FROM STORAGE
H₂ FROM ELECTROLYSIS UNIT
CO₂ FROM STORAGE
VENT
CO₂ FROM CONC. UNIT ACCUMULATOR
PRESS REG
SOLENOID SHUT-OFF
MANUAL METERING
MANUAL SHUT-OFF
MIXTURE CONTROL MODULE
LOW TEMPERATURE MODULE
WATER
RECOVERY U
DC 331 BYPA
& SHUT-OFF
VALVES
SABATIER REACTOR
DESULFUR-IZATION CHAMBER
SABATIER
SA
ISO
V
FEED GAS VALVE
BOS

Figure

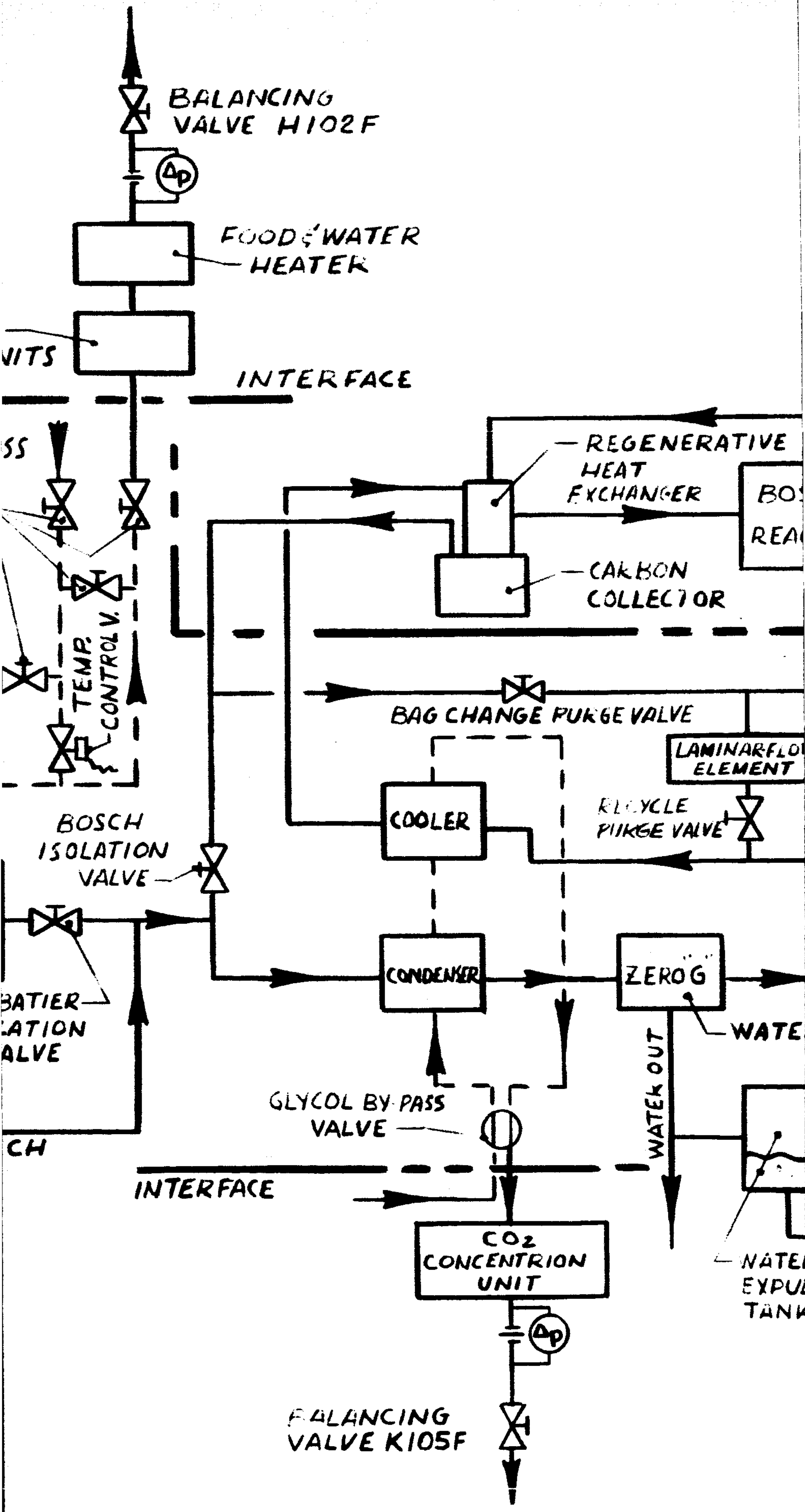

8. CO$_2$ Reduction Unit Flow Schematic

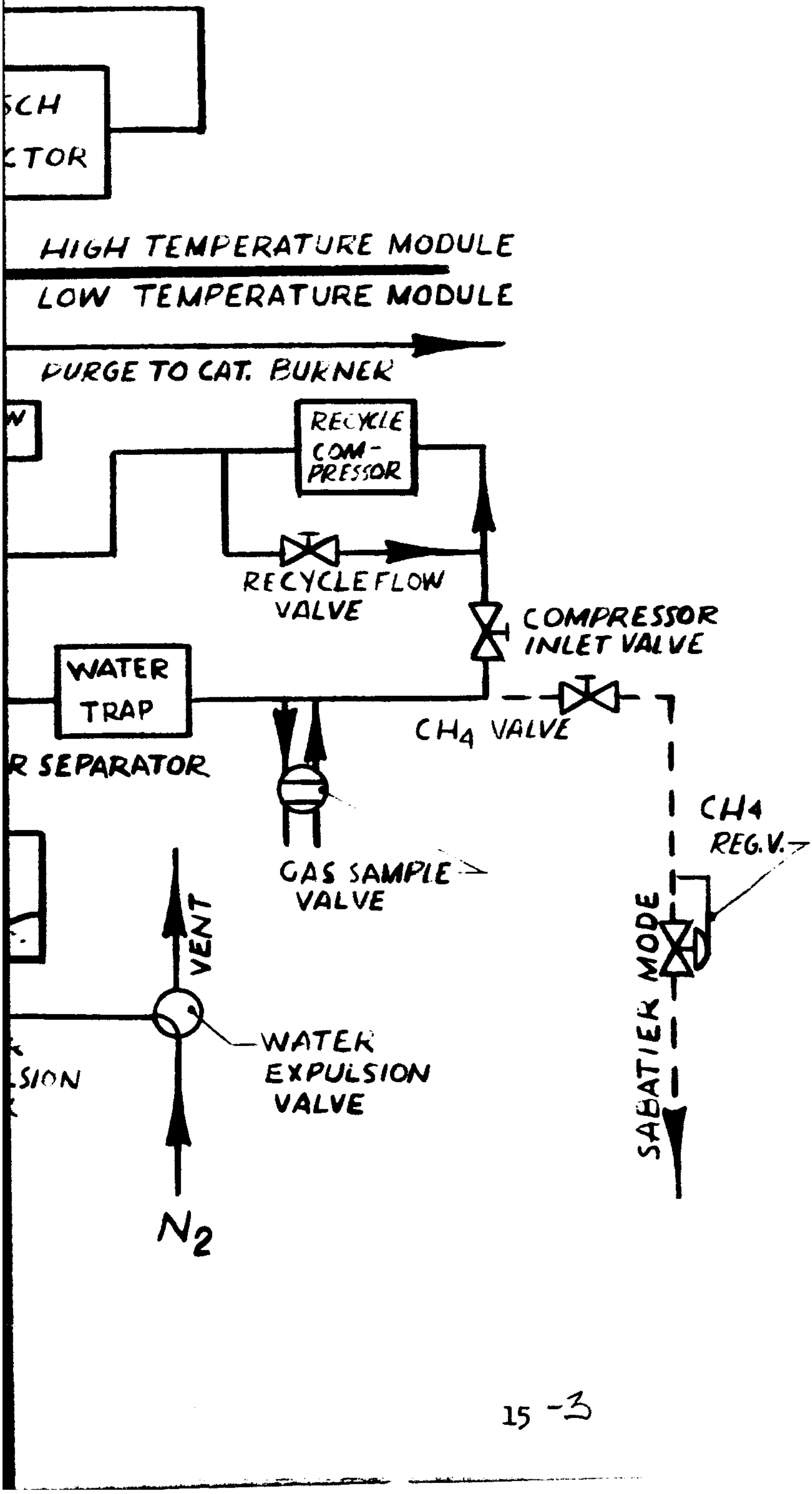
SCH
CTOR
HIGH TEMPERATURE MODULE
LOW TEMPERATURE MODULE
PURGE TO CAT. BURNER
W
RECYCLE COM-PRESSOR
RECYCLE FLOW VALVE
COMPRESSOR INLET VALVE
WATER TRAP
R SEPARATOR
CH4 VALVE
CH4 REG.V.
GAS SAMPLE VALVE
VENT
WATER EXPULSION VALVE
SION
SABATIER MODE
N2

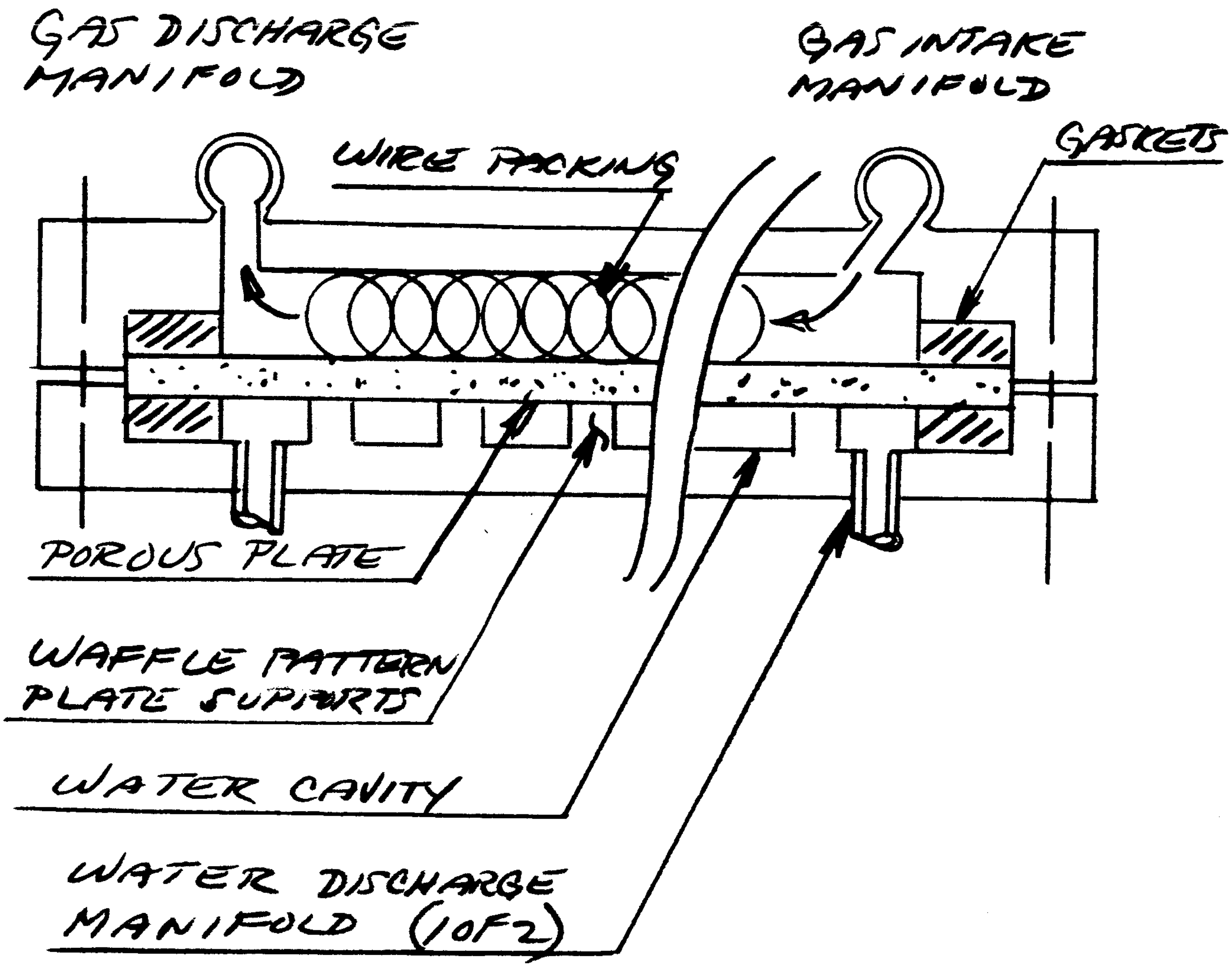

Figure 9. CO_2 Reduction Unit Water Separator

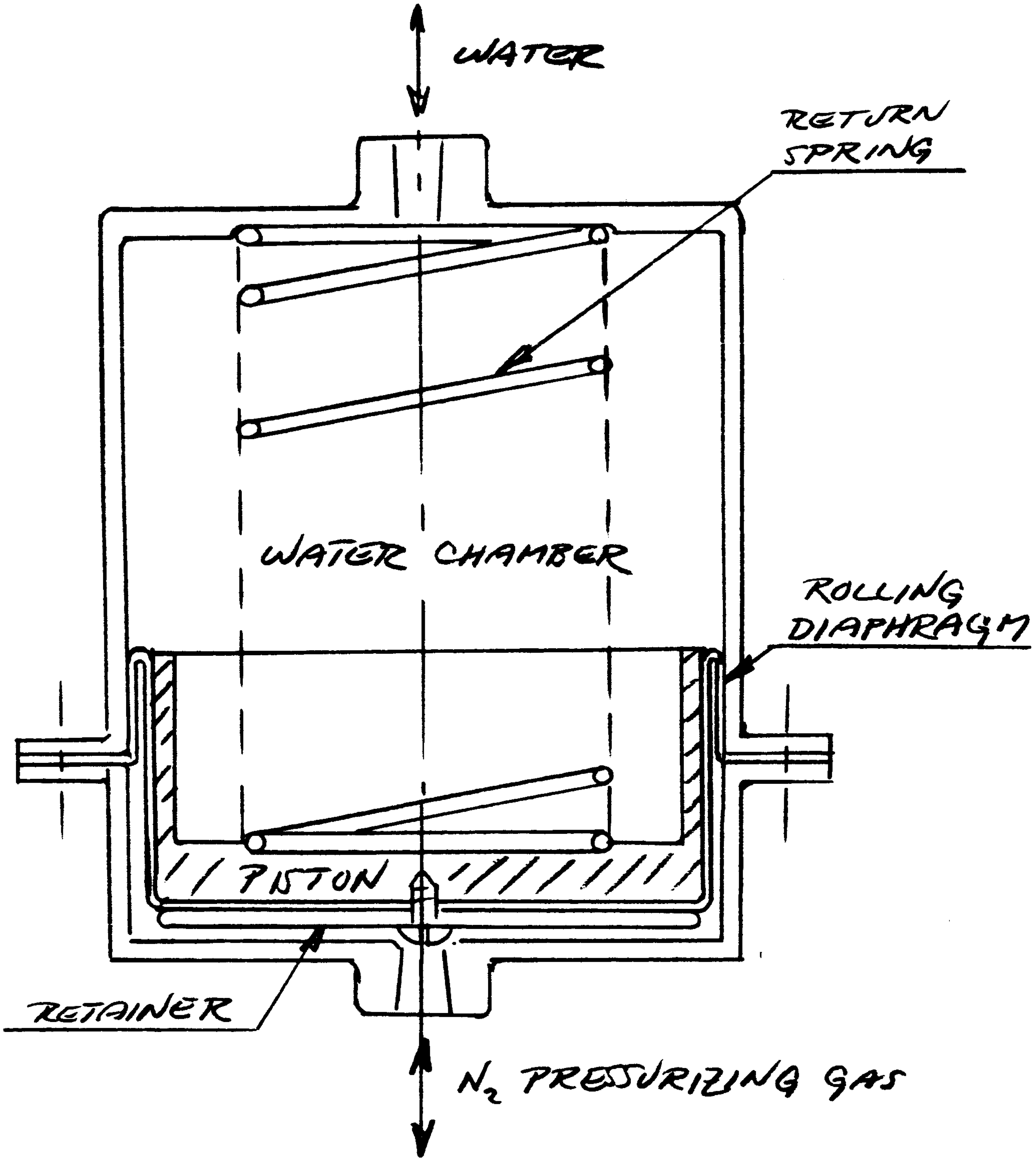

Figure 10. Water Expulsion Tank

3.2.3 UNIT PERFORMANCE. The porous plate water separator was installed in the reduction unit in June 1965 as part of the comprehensive redesign accomplished at that time. The unit was operated in the Bosch mode in a 10 psia cabin during the demonstration test of 13 July 1965, and again on 15 July to demonstrate the Sabatier mode of operation. Full process rate and water production were established in each mode and no difficulty was encountered in start, run, or shutdown. Complete test results are documented in the Final Demonstration Test Report, 64-26228.

Detailed instructions for operating the redesigned reduction unit, including wetting and sealing the water separator, are contained in the Handbook of Operating Instructions, 64-26230.

3.2.4 RECOMMENDATIONS. Although trouble-free performance of this porous plate separator is expected, programs for advanced studies of liquid/gas separation techniques should include the requirement of this application.

4/DYNAMIC SEPARATORS

The dynamic separators chosen for the prototype LSS employ a driven rotating member to impart a centrifugal force to the liquid particles contained in the liquid/gas mixture. The mixture is impinged on the inner surface of the rotating "bowl" which in turn drives the liquid to its major internal diameter. The liquid, assuming a uniform cross section, impinges on a static pitot tube which directs the water flow into a collection circuit. The separation efficiency and the magnitude of the pressure rise which can be attained by any given configuration is dependent on such elements as pitot design, bowl diameter, rotational speed, liquid/bowl interface friction, and circuit resistance. Two configurations are employed, one configuration installed in each evaporation unit downstream of the condenser, the other configuration in the waste management system as a urine/air separator and in the personal hygiene area as a waste air-water separator on the discharge side of the sponge squeezer.

Problems were experienced with both configurations in all three of the applications. One common problem was insufficient driving torque. This was accentuated both by excessive bearing drag resulting from poor lubrication and contamination, together with pitot orientation and configuration problems leading to excessive bowl drag and/or water stream slippage. Other problems were associated specifically with the two different configurations, the differences in the applications, and to some extent the nature of the liquid being processed.

4.1 WATER RECLAMATION - AIR EVAPORATION UNIT, WATER SEPARATORS

The separators installed in the evaporation units are air turbine-driven centrifugal separators, designed and produced by Hamilton Standard Division of United Aircraft. The separators were designed for a specific spacecraft application and were adapted to the LSS evaporation unit air circuits. The specification under which the evaporation units were developed required that the separators deliver essentially air-free water at the rate of 1.25 lb/hr to a system holding tank pressure of 2 psig, and to do so at both one-G and zero-G.

4.1.1 CURRENT CONFIGURATION. The current configuration of the separator was established by rework at HSD immediately following the source acceptance tests and is shown on HSD - SVSK58050B, "Water Separator, Centrifugal," which is reproduced in a generalized form in Figure 11.

4.1.2 DEVELOPMENTAL HISTORY. The flight requirements under which the initial design of the separator was developed, resulted in a decision to produce the unit in a unitized (sealed) configuration to meet the minimum weight and develop demands. Nominal water delivery and pressure rise requirements for the initial design were slightly lower than those for the LSS evaporation units. These two factors have been influential in the evaporation unit application, however, the sealed configuration has been by far the dominant limitation as it has virtually eliminated the possibility of corrective and improvement actions during the program. During the source acceptance tests at HSD in October 1964, separator stall was experienced and a pump was temporarily added which pumped water from the separator case drain and a downstream water trap into the external product water storage tank.

Following the source acceptance tests in which the original separator problems were defined, HSD elected to fabricate two new separators. The new separators were delivered to Convair in January 1965. During the initial system tests at Convair, separator No. 1 developed both low rpm and surge and an accompanying noise. The unit was removed and returned to HSD for rework. Again the "sealed" configuration severely limited corrective action. Within this limitation, several fixes were attempted. Bearings and bearing preload were changed and the metal mesh (droplet agglomeration) removed with little or no change in the drag and noise conditions. Following X-ray, which indicated the possibility of interference in either or both the bowl to case seal and the pitot assembly, seal clearances were increased. This apparently resulted in reduced drag and noise. Return of the separator to system test indicated that its performance had been restored to approximately its original value.

As subsystem and system test experience increased through functional checkout and performance evaluation, it became apparent that separator stall was frequent both during start-up and during test and often was of sufficient severity to require evaporation unit shutdown and rather complex corrective measures. Previous experience had demonstrated that significant corrections within the "sealed" separators were not possible. Therefore, system changes were made to minimize the probability of separator stall and to make correction of a stall a simple operator task.

One such change reduced the resistance of the product water circuit to the holding tanks. The other change added a separator purge circuit which removes excess liquid from either the case or rotating bowl and injects the purge into the air stream at the evaporator inlet. During normal operation the purge circuit should be required only during start up. However, during development and evaluation testing where scheduled step changes in air flow and/or thermal balance can be expected during the course of a single test, separator stall may occur while the unit is operating. Extensive testing has shown that the two system changes are effective and except for bearing drag problems, will produce "acceptable" operation of the water separation function if not of the separators themselves. The separator purge requirement undoubtedly will exist in one form or another with all dynamic separators in both one-g and zero-g environments. The differences in configuration and gravitational affects will alter but not eliminate the purge requirement and the type of mechanisms employed.

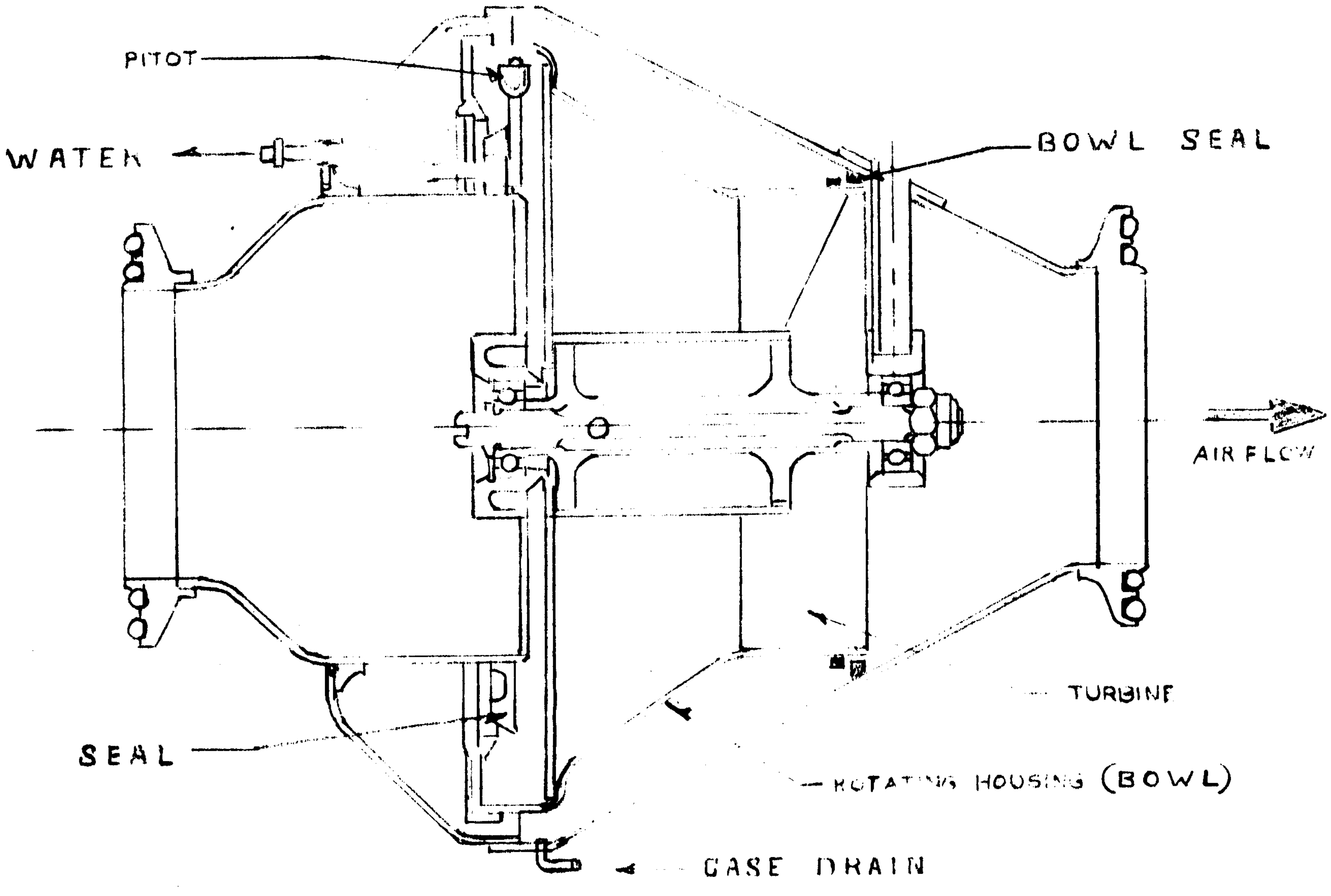

Figure 11. Centrifugal Water Separator - Air Turbine Driven

4.1.3 UNIT PERFORMANCE. Neither unit can meet the pressure rise requirements without altering the product water circuits. Unit No. 1 can attain approximately 0.7 psig at the holding tank while unit No. 2 can attain slightly over 2 psig. Characteristic speeds for unit No. 1 at a sea level ambient fall in the range of 2100-2200 rpm and 1500-1800 rpm at an ambient of 10 psia while unit No. 2 operates in a range of 2200-2400 rpm at sea level and 1900-2200 rpm at 10 psia. Any factor affecting mass flow in the evaporation air circuit will influence separator rpm, as will changes in the residual liquid in the separator case and water "level" in the rotating bowl. In normal operation these changes are not sufficient to cause trouble. However, deviations from the characteristic speed ranges resulting from step changes in operating conditions are rapid in build up, either going to 3000-4500 rpm indicating an abnormally low or no process rate or to a stalled or near stalled condition, indicating excessive water "levels" in the separator.

Following extended shutdown, an additional problem has been experienced. The units have been difficult to start and operate at a lower rpm than normal. Examination of the separators has revealed excessive bearing drag caused by a gum-like contaminate in the bearing. Clean up or replacement of the bearings has temporarily relieved the problem.

4.1.4 RECOMMENDATIONS. Repeated and exhaustive attempts have been made by both Convair and Hamilton Standard to analyze and correct the problems being experienced. Because of the "sealed" configuration adopted for the initial design and subsequently carried over to the current configuration, no significant progress has been made. In addition, it is not likely that corrective progress can be made with the current units. Recommendations thus involve an investigation into a new design which will permit disassembly, produce an optimized pitot design, tolerage the contaminants inherent in the process stream, provide adequate torque and torque characteristics to handle the load and its variations, and include self-purging capabilities as required.

4.2 WASTE MANAGEMENT AND PERSONAL HYGIENE, WATER SEPARATORS

The separators employed for air-urine separation in waste management and for waste wash water in personal hygiene are identical motor-driven centrifugal separators designed and produced by MRD of General American Transportation Corporation. The separator design was specifically developed to perform the liquid/gas separation function required by the urinal assembly of the waste management. The specification under which the design was developed required that the separator deliver essentially air-free urine at the rate of 2.40 lb/hr, at an outlet pressure of 5 psig. In addition, it is required to do so while operating with a liquid content as high as two pounds and to do so at both one-g and zero-g. The inlet air-urine mixture is drawn through the urinal and into the separator bowl by venting the bowl to the low pressure of the waste management assembly blower inlet.

4.2.1 CURRENT CONFIGURATION. The initial configuration of the separator, shown in Figure 12, has been significantly modified as shown by Figure 13. The changes present in the final configuration include:

1. Addition of a housing mounted drive support bearing.

2. Replacement of the drive motor with a motor of higher torque.

3. Installation of an improved pitot.

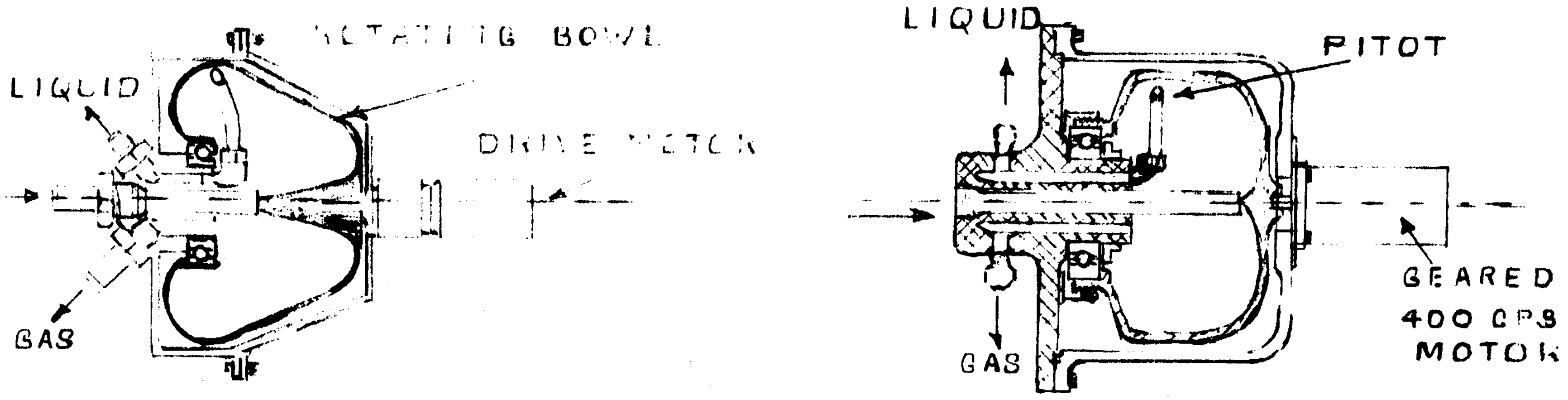

INITIAL CONCEPT

INITIAL CONFIGURATION

Figure 12. Centrifugal Water Separator - Motor Driven

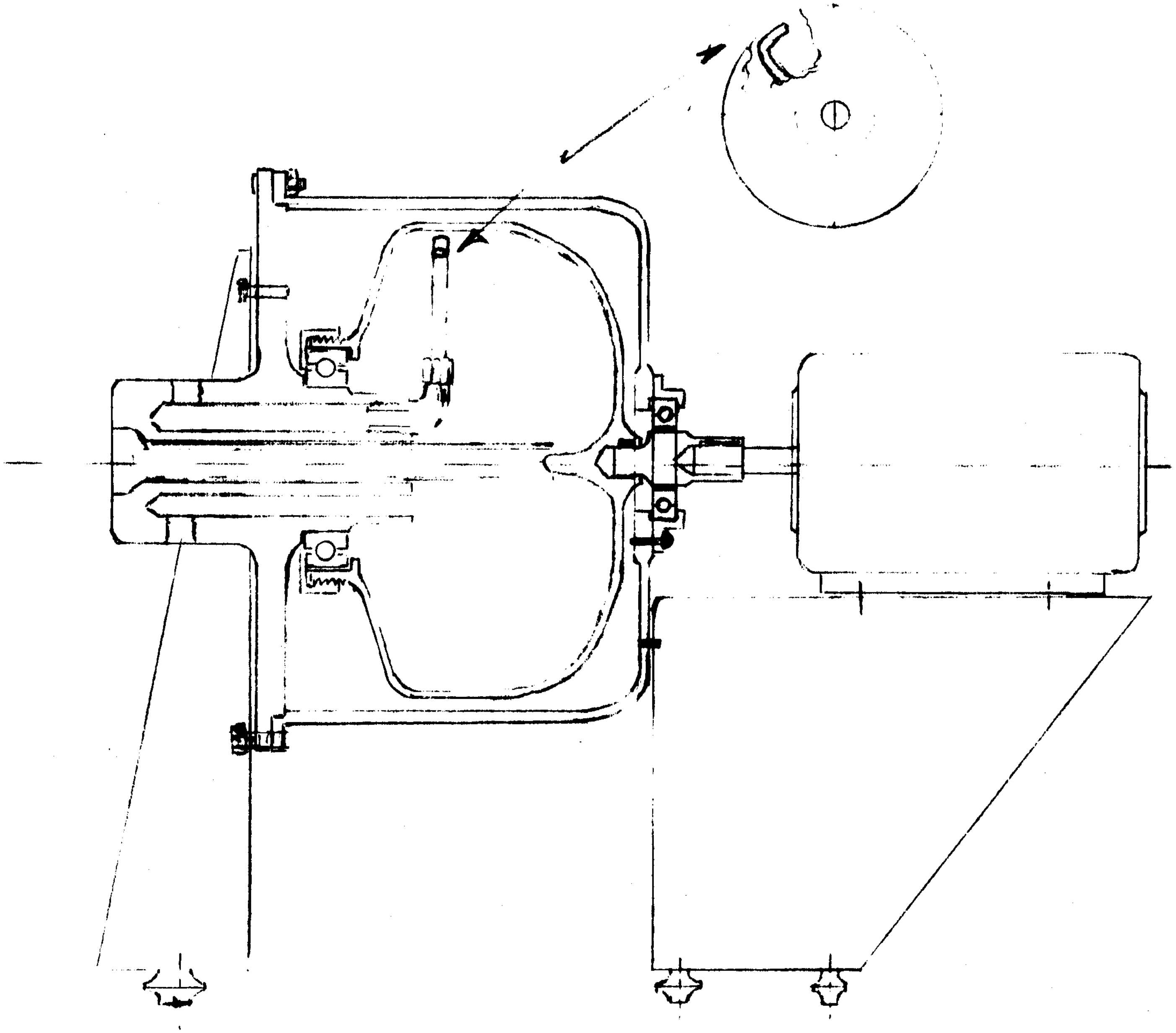

Figure 13. Centrifugal Water Separator - Final Configuration

4.2.2 DEVELOPMENTAL HISTORY. The urine separator was specifically designed to meet the requirements of the LSS but was based on the design of previously constructed units. The maturation of the initial design can be observed in Figure 12 by comparing the initial concept of the initial released configuration.

1. Problems Encountered in Developing Initial Configuration. During both development tests and the source acceptance tests held at MRD in October 1964, various problems were encountered including the following.

   A. Excessive vibration.

   B. Low output flow and/or pressure.

   C. Water leakage into separator case through bearing.

   D. Materials corrosion.

2. Corrective Actions Included in Initial Configuration. Corrective actions taken prior to source acceptance to minimize the problems as listed in paragraph (1) included:

   A. Dynamic balance of rotating bowl (1A).

   B. Alteration of pitot configuration (1A, 1B, 1C) to reduce residual liquid level and increase delivery capability.

   C. Addition of a water splash barrier (1C) at the bearing.

   D. Bowl bearing material changes to stainless steel (1D).

   E. Coating of interior surfaces with Teflon (ambient cure spray)(1D).

3. Problems Encountered with Initial Configuration in System Tests. Following receipt of the waste management assembly and the personal hygiene separators and their installation in the LSS, several major problems were experienced including the following.

   A. Excessive vibration producing unacceptable noise and potential equipment failure.

   B. High bearing drag caused by accumulation of residue from the product streams accentuated by dry out during test shutdown (non-operating periods). Residuals from the cleansing agent (Benzalkonium Chloride) employed in the wash water appeared to be particularly troublesome. In addition, some bearing corrosion appeared as a potential problem. Bearing drag at times was sufficiently high to make start-up impossible with the torque available.

   C. Inadequate separation efficiency especially for wash water due to the foaming associated with the cleansing agent.

4. Corrective Actions Applied to the Initial Configuration. Corrective action taken to minimize the problems during the system test program and prior to the final test as listed in paragraph (3) included:

   A. Removal of the torque limited, flange-mounted, 400 cps, miniature geared motor and installation of a base-mounted, 60 cps, commercial direct drive motor of higher torque capability (3B).

   B. Elimination of bowl drive axis run-out (3A).

   C. Installation of a second bowl support bearing mounted on the separator housing (3A).

   D. Installation of an improved pitot (3A, 3C).

   E. Replacement of stainless steel components wherever possible with aluminum components to reduce corrosion accelerated by the materials incompatibility.

   F. Investigation of (not installed) replacement of the high drag metallic ball bearing employed as the bowl main support bearing with a low drag, non-metal, corrosion and contaminate resistant sleeve bearing. Various materials, materials combinations, and bearing configurations were investigated. The selected candidate was bronze-filled Teflon for both elements of the bearing (journal and sleeve). The molded raw stock is available as MB (70%) from Raybestos-Manhattan, Inc., Aerospace Division, 1400 E. Orangethorpe Avenue, Fullerton, California. The material is compounded as LNP No. 147 by Liquid Nitrogen Products, Santa Ana, California. Figure 14 illustrates the approach selected. It is believed that this type of bearing would also eliminate much of the noise associated with the large metallic ball bearing. Program schedules did not permit application of this essential step.

4.2.3 UNIT PERFORMANCE. Both separators in their final configuration are capable of delivering a sufficient quantity of liquid, adequately free of air, and at sufficient pressure to meet the anticipated demands of extended man tests. However, neither unit is capable of meeting the specified peak flow rate in its current (final) configuration. Figure 15 shows the delivery characteristics of the two units in their final configuration and of the urine separator in its initial configuration. The inherently high torque requirement for the large ball bearing being employed, accentuated by inadequate lubrication, together with its intolerance to contamination will continue to limit the performance of the units. Vibration has been reduced to a point where it would appear that the potential for vibration induced material failures has been significantly reduced if not eliminated. Noise problems associated with the installation structure still persists although of a greatly reduced level. Much of the start and stop vibration associated with excessive residual liquid levels has been eliminated but vibration still exists to the extent that vibration damping mounts are required to keep noise at an acceptable level.

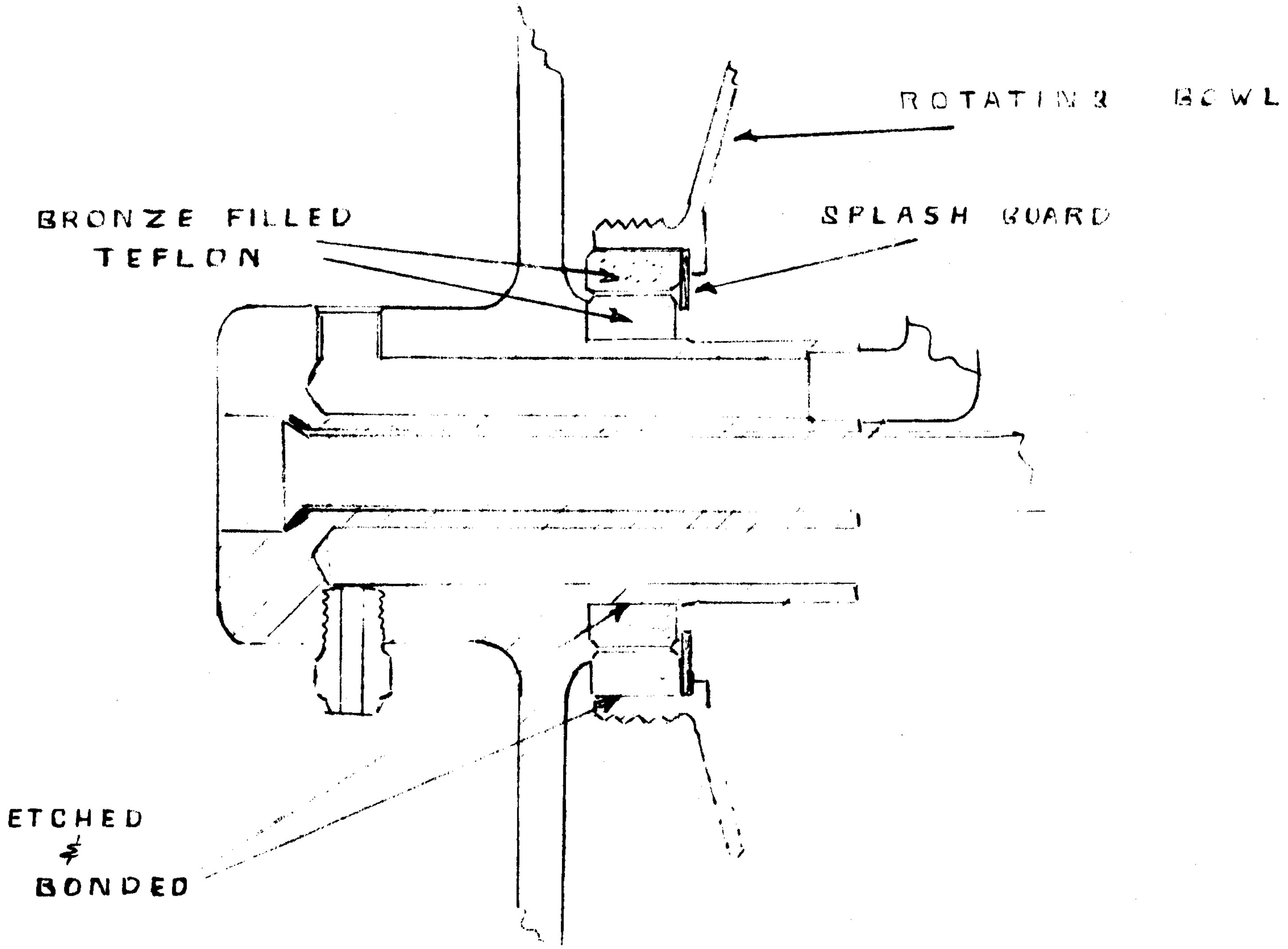

Figure 14. Non-Metallic Bearing - Suggested Configuration

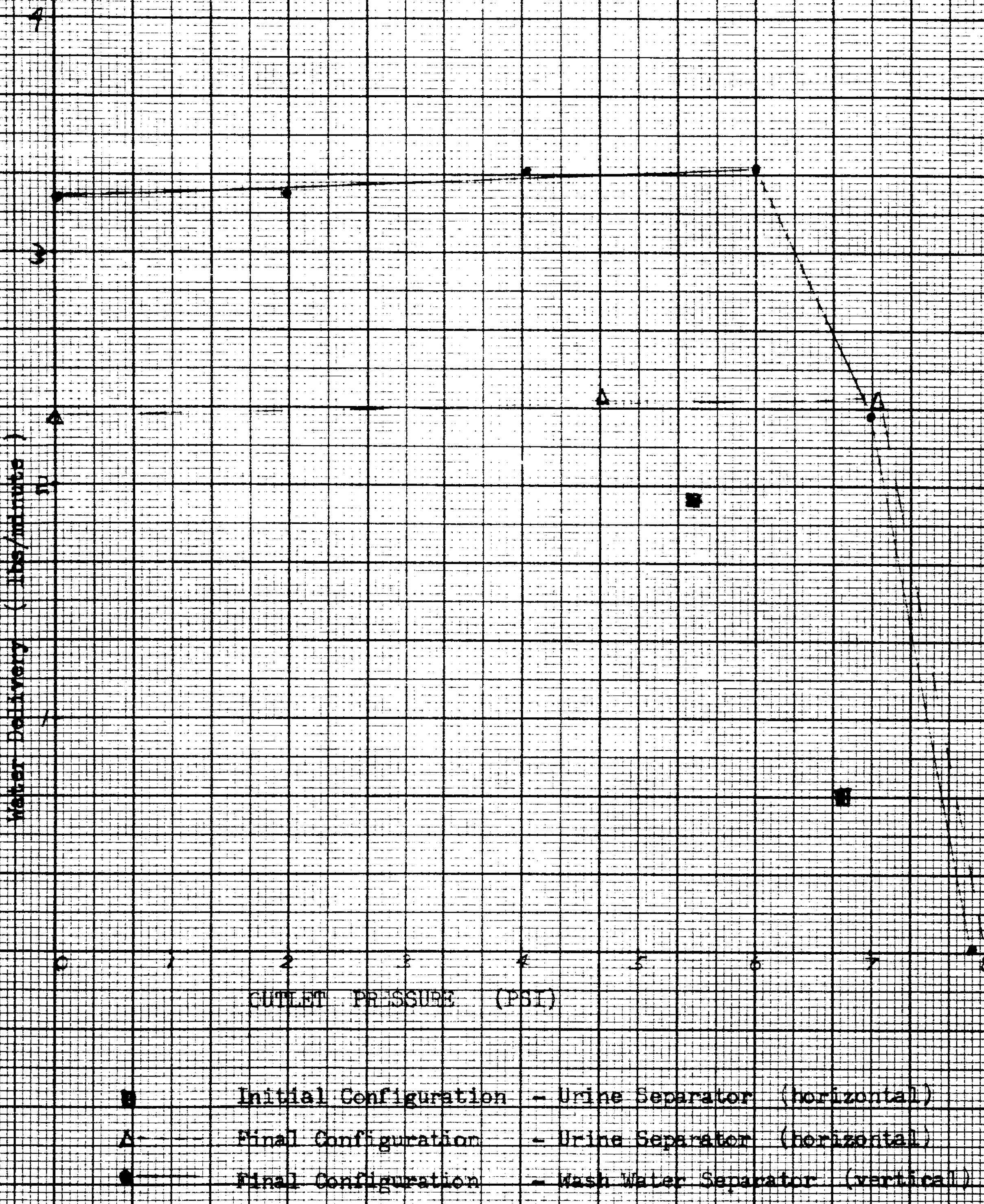

Figure 15. Centrifugal Water Separator - Motor Driven - Delivery Characteristics

4.2.4 RECOMMENDATIONS. It is recommended that the application of the two-element, non-metallic sleeve type bearing be examined. One separator could be immediately modified and subjected to an inclusive test program. The results of this program could form the starting point for the new separator design program recommended in Section 4.1.

5/REFERENCE DOCUMENTATION

Reports

64-26201	System Specifications -- Life Support System
64-26228	Final Demonstration and Test Report
64-02024	Cabin Air-Water Separator -- Specification
64-02003	CO_2 Reduction Unit -- Specification
64-02018	Waste Heat Air Evaporation Water Recovery -- Specification
64-02006	Waste Management System -- Specification
64-02005	Water Electrolysis Unit -- Specification

Drawings

64-26100	Schematic of Integrated Life Support System
64-26182	Subsystem Product Flow Diagram
64-26167	Cabin Air-H_2O Separator Unit System Diagram
64-26177	Water Separator Cabin Air Electrical Diagram
64-26161	CO_2 Reduction Unit System Diagram
TRW Dwg. 818478	Water Separator and Header Assembly
TRW Dwg. 81835	Cabin Air-Water Separator Schematic
64-26169	Air Evaporation Water Recovery System Diagram
ASD-SVSK-58050	Centrifugal Separator
64-26166	Waste Management System Diagram
MRD-1252-1500A	Separator Assembly
64-26163	H_2O Electrolysis Unit System Diagram