https://ntrs.nasa.gov/search.jsp?R=19660018752 2020-03-16T19:33:44+00:00Z

System Reliability Technology

Final Report

DEVELOPMENT OF RELIABILITY METHODOLOGY FOR SYSTEMS ENGINEERING

Volume I. Methodology: Analysis Techniques and Procedures

April 1966

GPO PRICE $ _____

CFSTI PRICE(S) $ _____

Hard copy (HC) 3.00

Microfiche (MF) .75

ff 653 July 65

FACILITY FORM 602

N66 28042 (ACCESSION NUMBER) — (THRU)

168 (PAGES) — 1 (CODE)

CR-75670 (NASA CR OR TMX OR AD NUMBER) — 15 (CATEGORY)

Prepared for

Office of Reliability and Quality Assurance
National Aeronautics and Space Administration
Washington, D. C. 20546

Under Contract NASw-905

RESEARCH TRIANGLE INSTITUTE · DURHAM, NORTH CAROLINA

FOREWORD

This is one of three volumes of the final report prepared by Research Triangle Institute, Durham, North Carolina under NASA contract NASw-905, "Development of Reliability Methodology for Systems Engineering". This work was administered under the technical direction of the Office of Reliability and Quality Assurance, NASA Headquarters with Mr. John E. Condon, Director, as technical contract monitor.

The effort under this contract began in April 1964, to continue for approximately two years and was performed jointly by personnel from the Institute's Solid State Laboratory and Statistics Research Division. Dr. R. M. Burger was technical director with W. S. Thompson serving as project leader. The principal contributors to this report were A. C. Nelson, C. A. Krohn and W. S. Thompson. J. R. Batts and C. A. Clayton wrote the computer programs and performed the appropriate analyses. Dr. R. F. Drenick of Brooklyn Polytechnic Institute served as consultant on this work.

PREFACE

The objective of this contract was to develop reliability methodology which relates to various techniques which can be applied in designing reliable systems and to extend the methodology by the development and demonstration of new techniques. It was important to have available a system on which to test and demonstrate the results. A complex static inverter was chosen for this purpose and served this role well.

The three major areas of effort in the program are defined by the titles of the final report volumes listed as follows:

Vol. I. Methodology: Analysis Techniques and Procedures

Vol. II. Application: Design Reliability Analysis of a 250 Volt-Ampere Static Inverter

Vol. III. Theoretical Investigations: An Approach to a Class of Reliability Problems

The purpose of Vol. I is to describe the mathematical techniques which are available for performing the reliability analysis of equipment life and performance. Appropriate technique selection, coupled with proper coordination of efforts during design, are essential for engineering reliability into equipment. Vol. II considers the practical application of reliability analysis to circuit design and demonstrates improvements in the identification and solution of problems using the techniques described in Vol. I. This employs the static inverter as an example. Vol. III describes fundamental studies in stochastic processes related to reliability.

Other technical reports issued under this contract effort are as follows:

1. "On Certain Functionals of Normal Processes," Technical Report No. 1, September 1964.
2. "Functional Description of a 250 Volt-Ampere Static Inverter," Technical Report No. 2, December 1964.
3. "The Variance of the Number of Zeros of Stationary Normal Processes," Technical Report No. 3, March 1965.
4. "Problems in Probability," Technical Report No. 4, October 1965.
5. "Reliability Analysis of Timing Channel Circuits in a Static Inverter," Technical Report No. 5, December 1965.
6. "Reliability Analysis of Timing Channel Circuits in a Static Inverter," Technical Report No. 6, January 1966.

ABSTRACT

This volume describes reliability analyses for equipment in the design stage. The major, essential reliability tasks are failure modes and effects analyses, performance variation analyses, component stress analyses, and reliability prediction. The proper coordinated use of these provides the bases for evaluating and improving the design to achieve the earliest possible assurance for reliability. Analysis of the ways in which components fail and the effects of each mode helps to determine the criticality of each component and assists in focusing appropriate emphasis in other efforts. Comparison of operating stresses of components to ratings determines whether components are being properly applied. For performance variation, either an equation for performance is necessary or else a physical model is used for direct observation and evaluation. The relative contribution of each component to the overall variability can be assessed. Probabilistic techniques such as Monte Carlo simulation and propagation of moments can be used to estimate the probabilities or distributions of performance. Various end-limit techniques provide worst-case performance values and parameter sensitivities. Reliability predictions are based on logic relationships for combining success or failure event probabilities of system components. Some advanced techniques consider more than two possible results for each event. The calculation of the probability of each result is most often based on the negative exponential distribution for the life of a component. Other distributions are now being employed in simple applications, but the complexity can be overwhelming if applied generally.

TABLE OF CONTENTS

		Page
1.0	Introduction	1
2.0	Design Reliability Analysis Concepts	3
2.1	Design Reliability Analysis Perspective	4
2.2	Coordination of Reliability Analysis Tasks	6
2.2.1	Functional Analyses	8
2.2.2	Failure Modes and Effects Analyses	10
2.2.3	Performance Variation Analyses	11
2.2.4	Component Stress Analyses	12
2.2.5	Reliability Prediction	13
2.3	Reliability Analysis Techniques	15
2.3.1	Performance Variability Analysis	16
2.3.2	Reliability-Life Analysis Techniques	16
3.0	Performance Variation Analysis Techniques	20
3.1	Inputs	20
3.1.1	Modeling Concepts	20
3.1.2	Part and Interface Characteristics	21
3.2	Procedures	21
3.2.1	End Limit Analyses (Sensitivity and Worst-Case)	24
3.2.1.1	Analytical	24
3.2.1.2	Experimental	31
3.2.2	Distributions at Fixed Times	36
3.2.2.1	Moments	38
3.2.2.2	Simulation	43
3.2.2.3	Analytical	50
3.2.2.4	Empirical	55
3.2.2.5	Discrete States	56
3.2.2.6	Miscellaneous	56
3.2.3	Time Varying Distributions	57
3.2.4	Random Processes	60
3.3	Outputs and Uses	68
4.0	Reliability-Life Techniques	71
4.1	Inputs	74
4.1.1	Logic Relationship	74
4.1.2	Indices	74

TABLE OF CONTENTS (con't)

	Page
4.2 Techniques	75
4.2.1 Conventional	75
4.2.1.1 Discrete Probabilities	75
4.2.1.2 Exponential Life Distribution	76
4.2.1.3 Continuous Markov Process	89
4.2.2 General Two-State	89
4.2.2.1 Continuous Time Distribution	90
4.2.2.2 Time Distribution Moments	90
4.2.2.3 Simulation	90
4.2.3 N-State	91
4.3 Outputs and Uses	91
5.0 Combination of Past and Present Results	92
6.0 Conclusions and Recommendations	97
7.0 References and Bibliography	106

Appendices

A. Computer Programs for Performance Variation Analysis	113
A.1 Introduction	113
A.2 Performance Variation Analysis (PVA)	113
A.3 Simulation Program	117
A.4 Sensitivity and Moment Analysis	119
B. Random Number Subroutines	125
B.1 Random Uniform Numbers	125
B.2 Random Normal Numbers	125
B.3 Correlated Normal Variables	126
B.4 Logarithmic Normal Variables	127
B.5 Exponential Variables	128
B.6 Gamma Variables	128
B.7 Beta Variables	128
B.8 Weibull Variables	129
C. Description of Performance Variation Analysis Programs	130
C.1 Introduction	130
C.2 Performance Variation Analysis - Simulation	130

TABLE OF CONTENTS (Con't)

	Page
C.3 Performance Variation Analysis - Sensitivity and Moment Analysis	131
C.4 Performance Variation Analysis - Interaction Analysis	132
C.5 Illustrative Example for Input and Output	133

1.0 Introduction

Good engineering is, and will remain, the key to reliability. But, good engineering is more than just applying physical relationships--it makes use of all available knowledge that benefits the effort. As systems have grown more complex and requirements more stringent, the engineer has had to rely more and more on assistance from other diciplines. Notably, there is a continuing interest in applications of more and better statistical techniques to practical engineering problems. Elementary techniques are adequate for solving many problems; however, there are also many cases where added sophistication using models and statistical techniques will provide distinct benefits.

In a previous contract effort (contract NASw-334) a basic study led to formulation of a theoretical probabilistic model for reliability. This model established a perspective for including both life and performance and their interrelationship in analyses for reliability.

The major effort under this contract has been devoted to further development of analytical tools and to demonstrating their use. Major emphasis has been on contributions to the design stage effort, the level at which improvements in analysis techniques are most beneficial. This allows the earliest possible assurance that requirements are met while the design is still flexible. A major result of this study has been the coordination and optimization of the various design stage reliability analysis efforts. These results provide further evidence that a sound reliability analysis methodology is evolving.

The purpose of Volume I of the final report is to describe the available analysis techniques for reliability methodology. Attention has been focused on electrical and electro-mechanical equipment, but many of the techniques are readily extendible to mechanical equipment. Volume II of this report presents a detailed design reliability analysis of a static inverter to demonstrate the role of improved techniques in resolving design problems. The static inverter is being developed at the George C. Marshall Space Flight Center for future space system applications and was selected as a representative space equipment for analysis in this activity.

Section 2.0 of this volume describes the coordination of the design reliability efforts and reviews the perspective of the designer (the decision-maker) who is selecting the reliability analysis techniques for evaluating a proposed equipment design. That section also describes certain basic concepts used in later sections. Section 3.0 describes and gives examples of performance variability techniques,

including modeling concepts and also describes the outputs and uses of the techniques. Reliability-life techniques are similarly described in Section 4.0. Section 5.0 discusses the use of prior information, in particular, Bayesian decision models. Conclusions are presented in Section 6.0. These compare the relative merits of the techniques and cite needs for further technique development. The references are given in Section 7.0 by sections and by appendices. A partial bibliography of papers is also included.

2.0 Design Reliability Analysis Concepts

This section serves both an introductory and summary role for the discussion of reliability analysis techniques. A design reliability analysis procedure is proposed for an equipment or subsystem. This procedure comprises the primary analysis tasks that a design engineer considers at this stage of the design and development cycle. The tools or techniques used in implementing these tasks are only described briefly in this section; detailed procedures are presented in Sections 3.0 and 4.0.

Reliability is defined as "the probability that the equipment successfully performs its intended function for a specified duration while operating under certain environmental stresses." Assuming that performance is acceptable at t_0, the start of the period (t_0,t), reliability R(t) is defined in abbreviated notation as

$$R(t) = \text{Prob}\{\text{"Performs intended function" in } (t_0,t) \,|\, \text{Environment}\}. \quad (1)$$

The environment represents "the totality of all factors related to the mission that affect the equipment operation and thus contains all signal inputs, power inputs, loads, and environmental stresses." The event "performs intended function" is considered to represent the joint event that the equipment is "alive" and its "performance acceptable" so that

$$\begin{aligned} R(t) &= \text{Prob}\{\text{"Alive" and "Performance acceptable"} \,|\, \text{Environment}\} \quad (2) \\ &= \text{Prob}\{\text{"Performance acceptable"} \,|\, \text{"Alive", Environment}\} \\ &\quad \times \text{Prob}\{\text{"Alive"} \,|\, \text{Environment}\}, \end{aligned}$$

where the time dependence is excluded for brevity but is still implied. The dichotomy contained in (2) conforms to the two major areas of performance and life; however, (2) also reveals the inseparable relationship of the two through the common environment. Thus any design action intended to increase one of the two probabilities in (2) should also include consideration for the effect on the other to assure that the net change is not a decrease in R(t).

The only completely satisfactory way to estimate reliability is to place several items on test under the mission conditions and use the ratio of the number of equipments which performed as intended to the total number used. Such a procedure is rarely possible, especially in the early design stage, and the only alternative is to achieve maximum assurance for reliability by performing appropriate analyses that uncover design weaknesses in the preliminary design and permit the selection of the best of alternate designs.

2.1 Design Reliability Analysis Perspective

Given a proposed mission and design for an equipment, the designer encounters certain problems with regard to how the equipment may behave in its environment. The reliability and performance requirements of the mission and the proposed design are the basic inputs to the designer, designated as the decision-maker, for analysis technique selection (see Figure 1). If the equipment is only a slight modification of equipment for which considerable field experience is available, then the analysis can be greatly simplified. Available resources, such as the data, manpower, schedules, and computer facilities are important because these constraints can reduce the number of reliability analysis techniques to only a few which are appropriate.

As illustrated in Figure 1, there are several general reliability tasks which typify the various elements of an overall analysis. Each task allows treatment, to some extent, of both performance and life. Failure modes and effects analyses (FMEA) are procedures for considering modes of operation of equipment components and the effects these modes have on equipment operation. FMEA are especially useful for identifying problem areas to be considered in other tasks. Performance variation analyses (PVA) treat continuous-type variations in performance characteristics using models (either mathematical or physical) which give the relationships between performance and the component and interface characteristics that cause the performance to vary. Component stress analyses consider individually the components of the equipment for a comparison of actual stresses to rated capabilities. Reliability prediction is concerned with the probability of successful operation of an equipment using models that relate success probability to probabilities of discrete events associated with components and interface characteristics. Implementation of these four tasks require the use of two basic sets of reliability techniques; performance variability and reliability-life.

In applying the techniques, typical outputs are as indicated in Figure 1; 1) reliability indices, 2) identification of design weaknesses, and 3) design or safety margins. These may suggest either a redesign, a more refined analysis technique, or further analysis using results of past experience with similar equipment. Present results may be combined with past experience by means of Bayesian models, reliability growth models, and/or by purely subjective considerations based on engineering experience. This may lead directly to redesign or further system considerations for possible trade-offs. Maintainability, human

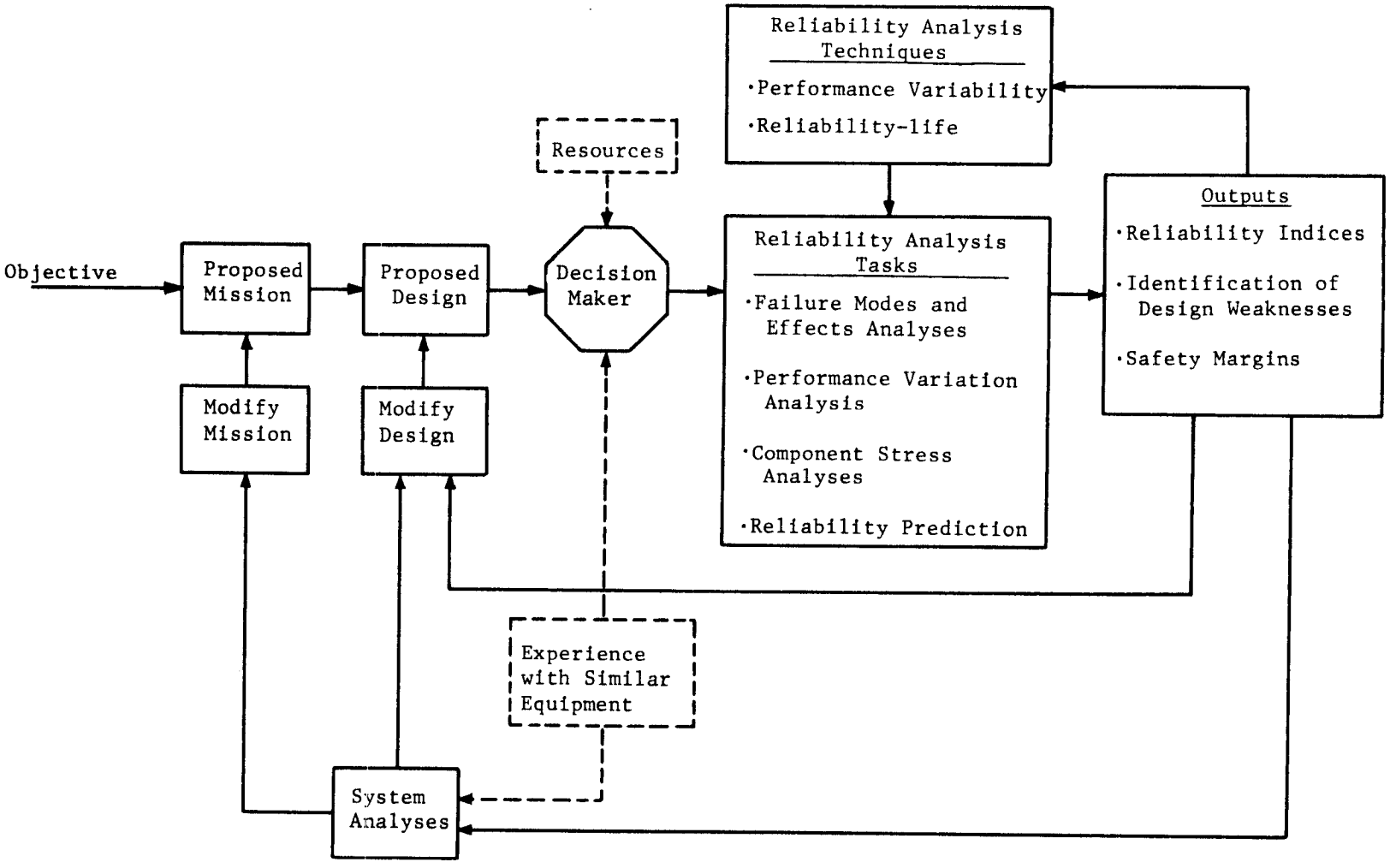

Figure 1. Design Stage Reliability Analysis Perspective

factors, physical constraints, cost/effectiveness, and optimization considerations become important considerations in this process resulting in design or mission modification. The procedures, as illustrated in Figure 1 may be iterated many times during the design effort until the desired assurance (within the constraints) is obtained.

Typical objectives of the reliability analysis tasks conforming to the output information are (1) to identify and remove possible causes of failure and degradation, (2) to apportion tolerances and balance design (or safety) margins, and (3) to obtain reliability indices. Primary reliance on any one task or technique will not fulfill the desired objectives; it is only through the appropriate coordination of the tasks and proper selection of the techniques that the objectives will be achieved.

The selection process requires a full understanding of what techniques are available, how they are applied, what inputs are required and what useful output they can provide. Later sections of this report are devoted to more detailed identification and description of available techniques. Special emphasis has been on performance variability techniques, this being an area which is conventionally less formalized and in which the need for promoting a better understanding to the design engineer is recognized. Reliability-life analysis techniques have received similar emphasis, but in less depth because experience with their application is more common.

The specific design reliability analysis tasks and their coordination are described in the following section. The tools or techniques which are available for implementing these tasks are discussed briefly in Section 2.3 and in further detail in Sections 3.0 and 4.0 of this report.

2.2 Coordination of Reliability Analysis Tasks

The four tasks are strongly interrelated and it is through the appropriate coordination of their use that maximum utility is derived for contributions to reliability. The interrelationship is illustrated in Figure 2. This figure represents an expansion of a portion of Figure 1 with emphasis on the analysis tasks, their coordination, and outputs.

As input to the analysis the mission and the proposed design are designated. Output information may vary in sophistication from qualitative judgements to detailed calculation of predicted success probabilities. Appropriate interpretation and use of the output information affects other program efforts such as:

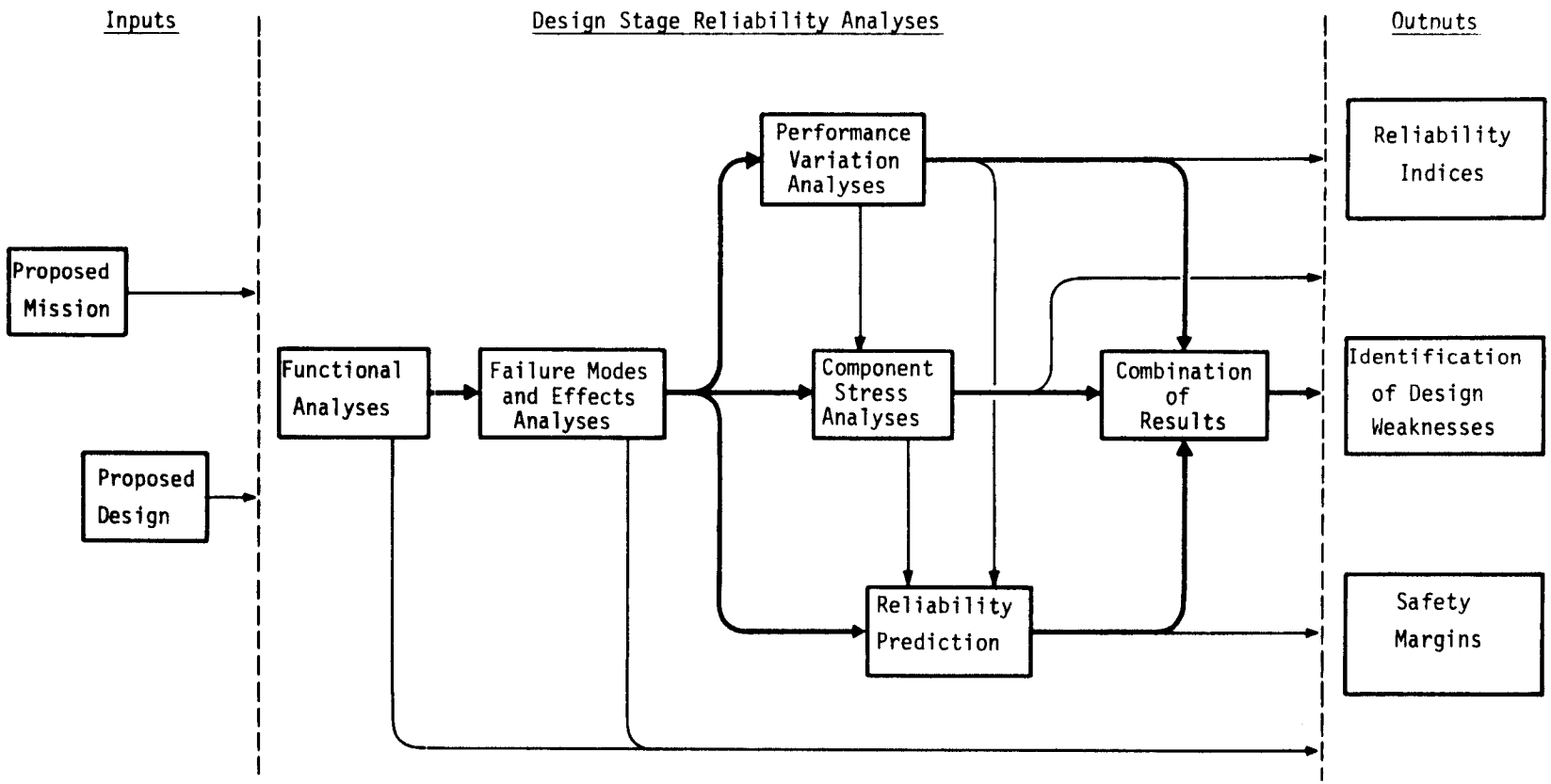

Figure 2. Coordination of Reliability Analysis Tasks for Equipment Design

(a) the selection of design configurations and design techniques,

(b) the selection of parts and materials,

(c) the testing of hardware (either breadboards, experimental models or prototype models),

(d) the methods used in fabrication of hardware,

(e) the preparation of specifications,

(f) the procedures used in operation, calibration and checkout, and

(g) the employment of the end product.

The analysis flow allows for many approaches of varying complexity. The aim is to coordinate the tasks in order to make the best use of available resources and, since the tasks are interrelated, to emphasize the need for careful planning. The process is iterative through the feedback paths shown in Figure 1 to allow for refining and updating the analyses as the equipment is modified and more information becomes available.

2.2.1 Functional Analyses

Functional analyses are concerned primarily with digesting all pertinent input information and translating it into forms useful for the other tasks. The basic approach to performing the reliability analysis tasks is modeling--designating important performance characteristics of the equipment and determining cause and effect relationships between the characteristics and the factors that influence their behavior. This allows evaluation of both equipment performance and life. The modeling concept is thus the basis for the information gathered in the functional analysis. Modeling concepts are described in more detail below for further clarification.

Systems are composed of elements (such as subsystems, circuits, or piece-parts) and the elements are functionally interrelated in that the behavior of each element is influenced by the behavior of others. Such functional decomposition of a system is one effort of functional analysis; however, the system or equipment being analyzed is itself first viewed as an element.

A general functional model of an element of a system is shown in Figure 3. The X's are <u>input variables</u> which, in general, define the total environment of all signal inputs, power inputs, loads, and environmental stresses. The U's similarly are variables representing <u>internal characteristics</u> of the element. For example, if the element is a circuit the U's may represent such factors as resistance, transistor gain or the dimension of a printed circuit. The Y's are <u>attributes</u> or the

performance characteristics of interest designated to characterize the operation of the element. For example, gain and bandwidth may be designated as performance attributes of an amplifier. All of the variables are considered to be functions of time, and in concept, there exists a functional relationship

$$Y_j(t) = g_j[X_1(t), \ldots, X_L(t), U_1(t), \ldots, U_M(t)] \qquad (3)$$

relating each of the Y's to the X's and U's. In general, the X's, Y's and U's are considered random processes, and reliability analyses are aimed in concept, toward probabilistic treatment of these variables over time. Because all three exhibit analogous modes of behavior, further discussion will be limited to the attributes. There are two broad classes of behavior. They are characterized by attribute variation ending in an abrupt change, catastrophic failure, and variation which does not end abruptly, performance variation or degradation. The former behavior is typically illustrated by an opening or a shorting of a resistor and the latter by a degradation or drift of resistance with time due to aging and input variations. (The definition of "abrupt" is subjective and in reality intermediate forms of attribute behavior or "mavericks" may exist; another possible definition is that those attributes whose behavior does not conform to a functional model descriptive of a general population are designated as catastrophic failures.) The relationship of these two classes of behavior to the two events, "alive" and "performance acceptable" in the reliability definition given by equation (2) is apparent.

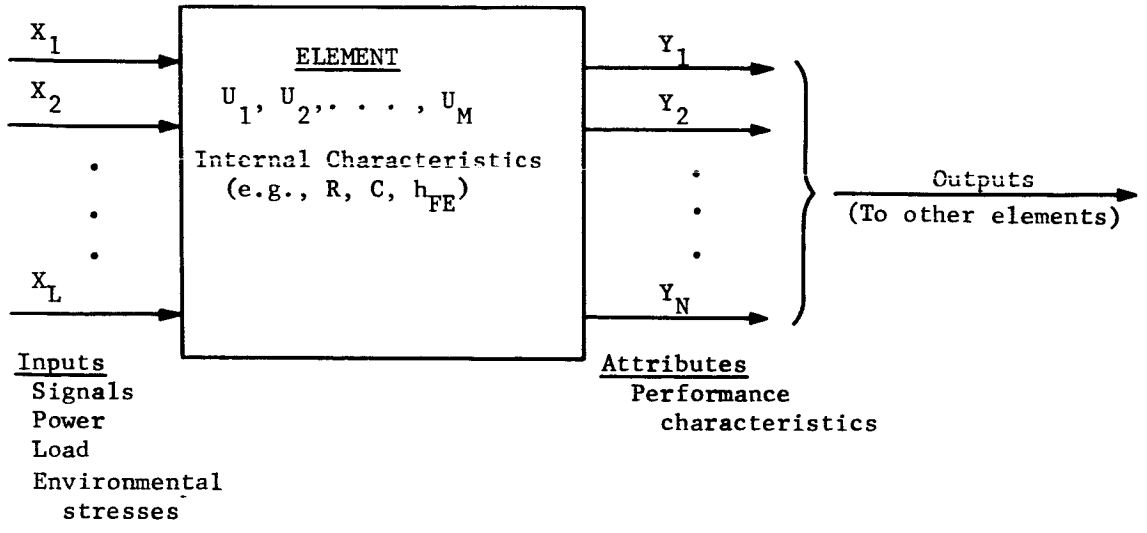

$$Y_j(t) = g_j[X,(t), \ldots, X_L(t), U_1(t), \ldots, U_M(t)]$$

Figure 3 Functional Model of a Single Element

Within this modeling framework, the aim of functional analysis is to identify the attributes and their regions of acceptable variation and to specify the factors that influence their variation. This entails careful scrutiny of all signal inputs, power inputs, loads, and environmental stresses, taking into account their functional forms and operational profiles. Also involved is the functional decomposition of the equipment in order to identify the internal characteristics in terms of attributes of lower level elements and the functional relationships among the elements.

The functional analyses alone frequently provide useful output information. Typically, they may reveal inadequate safety margins in interface characteristics or discrepancies in operational requirements.

2.2.2 Failure Modes and Effects Analyses

Experience has shown that a failure modes and effects analysis is important and should be initiated as early as possible in the design effort. Briefly, modes of operation of lower level elements are identified and their effect on the equipment noted. For analysis of a complex system, failure modes may be limited to those for subsystems with identification of failed modes such as

(a) premature operation,
(b) failure to operate at a prescribed time,
(c) failure to cease operation at a prescribed time, and
(d) failure during operation.

Other degraded modes such as excess noise or high output voltage may be introduced but this adds to the complexity of the analysis. For smaller elements, i.e., circuits, the analysis extends to failure modes of piece-parts, typically considering opens, shorts, and drift modes for their effect on the circuit.

Each of the component modes considered in conjunction with those of other components defines a mode of behavior, but not necessarily distinct modes, of the equipment. (These modes are not necessarily distinct as more than one combination of component modes may result in the same system behavior.) If the effect of a mode of behavior on the equipment is detrimental, this becomes useful output information.

A major purpose in the failure modes and effects analysis is the designation of problems to which the other techniques may be usefully applied. Some use of performance variation analysis is required in identifying the effect of a component failure. As noted above, it may be obvious in some cases and in others, require only simple calculations; however, an extensive analysis may sometimes be required

and discretion should be used in deciding whether the effort is justified. This judgement is influenced by the time and cost for determining the effect, the likelihood of the failure occurring, and the penalty for not knowing the effect. Also, if a component failure denotes a range of uncertainty in the behavior of an important attribute, this may dictate the need for further modeling effort using some of the performance variability techniques.

Component failure modes identified in the failure modes and effects analyses are also considered in the components stress analyses. For example, if an open failure of a particular resistor causes failure of the system, this may specify more emphasis on the electrical and thermal stresses that can cause the failure. This may, in turn, identify the need for more derating, heat sinking or similar remedy.

Failure modes are direct inputs to the reliability prediction for specifying the component states to be included in a logic model. Methods for treating two or more component states in prediction are described in Section 4.

Initially, it is usually impossible to designate the effects of all component modes. The analysis can be updated and refined as more information is obtained. The problem of dimensionality is prevalent and an objective is to abstract the more important modes for consideration. There is a need for further research in procedures in this task.

2.2.3 Performance Variation Analyses

Performance attributes are designated in the functional analyses to characterize the operation of the system. Performance variation analyses (PVA) treat the continuous-type variations in behavior of these attributes for the system modes of interest identified in the failure modes and effects analysis. Major emphasis is usually on normal modes of operation when all components are operating in a non-failed state but possess inherent variability. The major concern with PVA is the likelihood or assurance that specific requirements are met.

In general, the treatment is with models, either mathematical or physical, which relate the attributes to influencing factors and use them for investigating the effects of variability. The types of results available from these are:

(a) attribute sensitivities to variations in input and internal part characteristics,

(b) sources of variation,

(c) regions of variations for input and internal part characteristics that result in acceptable performance,

(d) worst-case values of attributes,

(e) attribute distribution characteristics (means, variances, percentiles, etc.), and

(f) probabilities of acceptable performance for given input conditions.

These can be direct outputs for use in making design decisions, in estimating component stresses, or in obtaining reliability predictions. For example, the use of a computer network analysis program such as NET-I, yields the major attributes of the circuit such as gain or output pulse rise time and also the electrical stresses such as voltage, current and power dissipation of each component. Successive computations may include variations of input and internal part characteristics to yield worst-case values of distribution characteristics of these stresses.

As described under failure modes and effects analyses, performance variability techniques are useful also in determining effects of failed components. For example, computer network analysis programs can simulate various failure modes (open, short, etc.) with the resulting attribute value and computed stresses for other components indicating the effect.

2.2.4 Component Stress Analyses

In stress analyses components of the system are considered individually for a comparison of actual stresses to rated conditions for which they were designed. The concept of stress as currently applied in this sense is an extension from the concept of mechanical stress applied in strength of materials analyses, and as a result has assumed broader meanings to include all conditions such as electrical, thermal, and radiation that may have detrimental effects on the equipment operation. The purpose of stress analyses is to minimize, within existing constraints, the likelihood of component failure caused by stress exceeding "strength" and the effects of aging and degradation caused by the particular stress condition.

Stress analyses may be performed at different levels of sophistication. For example, determination of electrical stresses may be limited to computing worst-case conditions using very simple models or to determining the distribution of the stress using statistical techniques.

More sophistication in thermal analyses are providing more realistic temperature profiles as a benefit to stress analyses. As illustrated and previously

described, some of the stresses may result from performance variation analyses. In simple analyses the comparison of stress with rated condition is performed by simply comparing the levels while accounting for derating when employed. Even though numerous simplifying assumptions are usually required; the analyses serve to significantly increase the engineer's confidence in design acceptability. For more extensive analyses where distributions of quantities are involved, the comparison may require computing probabilities that stress is less than strength with the acceptability based on the computed probability.

Significant outputs leading directly to design improvement are the identification of design weaknesses and the estimation of design margins. The stress levels determined in the analyses are also useful outputs to life predictions, as illustrated, for example, they are used in the selection of application factors for adjusting part failure rates.

2.2.5 Reliability Prediction

Reliability prediction treats equipment behavior in terms of probability of successful operation using models that relate success probability to probabilities of discrete events. This task draws heavily on the reliability-life techniques described in Section 4.0. Because of simplicity the more popular techniques are the conventional two-state techniques using part failure rates and exponential life distributions. The failure modes and effects analyses identify failure modes to be considered in the prediction. In conventional practice, major emphasis is usually on catastrophic failures; however, some performance degradation failures are in the prediction since part failure rates include some out-of-tolerance failures in the failure rate estimates. This practice is not consistent and thus the conventional predictions do not fully account for performance degradation failures. Occasionally, prediction of performance degradation failures are available from performance variation analyses. Their integration into the prediction conforms to the concepts presented in Section 2.0 and is further clarified by an extension of these concepts as described below.

The second expression of reliability R(t) formulated from the basic definition is

$$R(t) = \text{Prob}\{\text{"Performance acceptable"} \mid \text{"Alive"}, \text{Environment}\} \times \text{Prob}\{\text{"Alive"} \mid \text{Environment}\}$$

where the time dependence is excluded from the arguments for brevity but is still implied. The event, "Alive", is considered synonymous with the event of "no catastrophic failure" and the event, "Performance Acceptable" with "no performance degradation (or drift) failure". The environment represents the totality of all factors related to the mission that affect the equipment operation and thus contains all signal inputs, power inputs, loads, and environmental stresses.

In the above expression for reliability, the first probability measure of performance represents the input to prediction from performance variation analyses and the second probability represents the successful or alive prediction for the catastrophic failed states identified in the failure modes and effects analysis. The probabilities for the various environmental conditions are derived from the mission profile through functional analyses or from the stress analyses.

Complexity and the limitations on data usually preclude actual realistic predictions of reliability based on the above concepts. One comprehensive example of literal application of these concepts for actually obtaining assessments of the probability measures for a single axis stabilization loop is presented by Britt (1965). In that study the estimated reliability was used to compare different designs of an equipment. Similar analysis of circuits, but in less depth, was also reported by Suran (1963).

Conventional practice in prediction conforms mainly to estimating

$$\text{Prob}\{\text{"Alive"} \mid \text{Environment}\}$$

which is only a portion of the reliability expression presented above. As previously mentioned, some performance degradation failures are included because of the inherent nature of existing failure rate data. Evolution of more sophistication in prediction has been slow, however, techniques in the general two-state area employing more descriptive life distributions such as the Weibull are frequently being used. An extension to more than two states is also being used with a typical, practical approach for circuits employing three-state logic (success, failed open, and failed short) for simple components.

Even though logic expressions themselves frequently provide useful information, emphasis is usually on computing a number to represent predicted reliability. Little dependence can be placed on the actual value of a reliability index computed in this manner. Relative values are useful for comparing designs and with appropriate combination with results from other tasks, serve further in uncovering design weaknesses.

2.2.6 Combination of Results

This is not a formal, well-defined effort but exists both in concept and reality. Each method separately provides useful design information, but to assure appropriate emphasis on both performance and life the results from the various methods, particularly the three illustrated, must be considered jointly. If, as described under reliability prediction, probabilities of acceptable performance could be combined with life probabilities to obtain a meaningful prediction of success probability, this would provide a major portion of the design information needed. The outputs from prediction will usually be imprecise indices with significant utility only when appropriately compared with other results.

Because of the different forms of the results the combination process is primarily subjective. As illustration, consider that performance variation analyses have yielded worst-case results for two designs being compared and that Design A gives, say, smaller variation than Design B. Reliability predictions with conventional two-state analyses may, in turn, result in Design B having a higher probability of success. Indications are thus that Design B represents an improvement in life over Design A, however, at the sacrifice of performance. If there is adequate confidence in the results of each, a trade-off may be necessary, for example, resulting in Design C that uses some of the better features of Designs A and B. On the other hand, lack of confidence in the results may dictate the need for more sophistication in the analyses. For example, an extension of the life analysis to more realistically include additional modes of part failures and their affects may show that Design A is the better from the standpoint of life. This type of problem is demonstrated in Parker and Thompson (1966) for a circuit in the static inverter where the analysis resulted in eliminating 100 diodes for design improvement.

In many cases, the results of stress analyses are also needed to make the design decision. This is also demonstrated in Parker and Thompson (1966) for the same circuit where the stress of component power dissipation became a factor for consideration in the design comparison.

2.3 Reliability Analysis Techniques

The two basic sets of reliability analysis techniques, performance variability and reliability life, are described briefly in this section.

2.3.1 Performance Variability Analysis

Performance variability techniques (PVT) are mathematical procedures for treating the continuous variation of performance characteristics using models (either mathematical or physical) which provide relationships between equipment performance attributes and part and interface characteristics. The different procedures are based primarily on the nature of the input data (limits, distributions, and processes) and on the model (physical or mathematical). The inputs, procedures, and their outputs are outlined in Figure 4.

The inputs to such an analysis are mathematical models of the general form

$$Y_j(t) = g_j[\underline{X}(t), \underline{U}(t)], \; j = 1, 2, \ldots, N,$$

or physical models such as a breadboard, prototype, or the production items. In addition, the part and interface characteristics are required and are to be expressed as a function of the operational profile of the equipment when possible. The form of the models and the part and interface data is related to the analysis technique.

The techniques are designated as (1) end-limit (2) fixed-time distributions, (3) time-varying distribution and (4) random process. The end-limit procedures make use of limit or "expected extreme" and nominal values of part and interface characteristics. The fixed-time distribution procedure uses distributions or characteristics (such as moments) of the distributions for the part and interface characteristics. The time-varying distribution permits the consideration of a changing distribution of the characteristics over the mission duration as a function of the environment and degradation of the characteristics with time. Finally, random processes allow for general treatment of the variations of the characteristics with time and corresponding treatment of the outputs. All of the above techniques can be applied with physical or mathematical models and to varying degrees of analytical exactness. Consequently, several techniques are described in detail in Section 3 along with examples of applications.

2.3.2 Reliability-Life Analysis Techniques

Reliability-life techniques (RLT) refer to those procedures which treat each component of an equipment as being in one of several possible states. Either discrete probabilities are assigned to the various states or appropriate failure time distributions are assumed along with the conditional probability of failure in one of the several modes. The various techniques, their inputs and outputs are outlined in Figure 5.

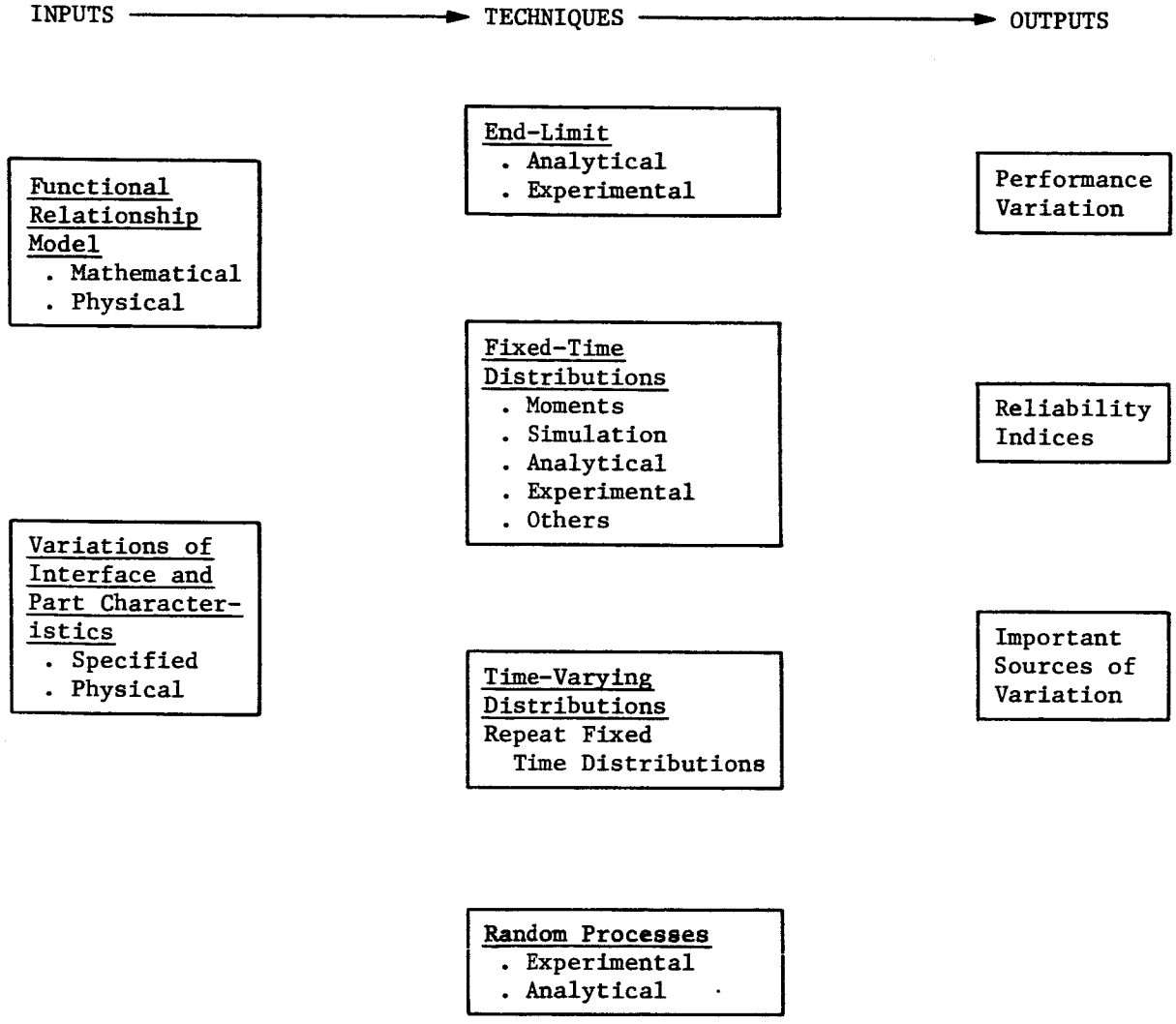

Figure 4 Performance Variability Techniques

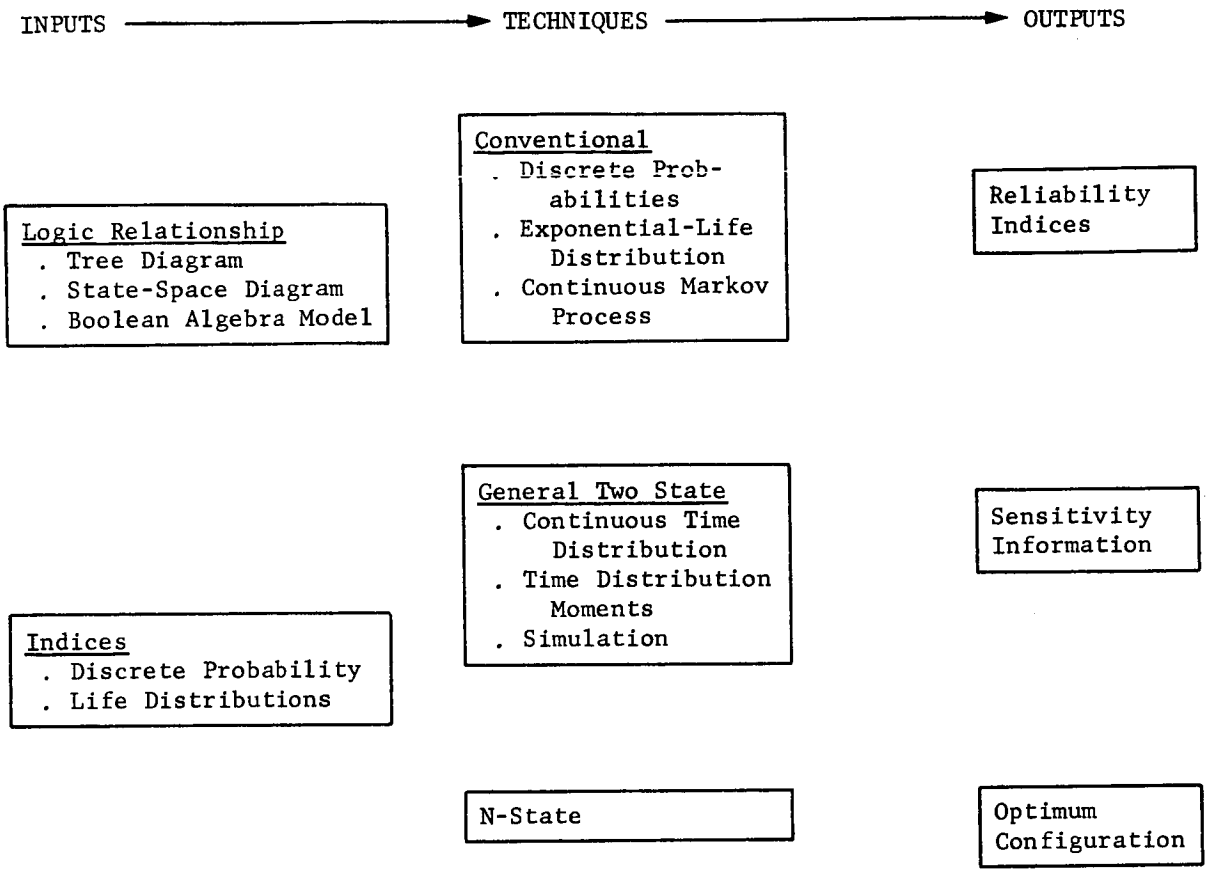

Figure 5 - Reliability-Life Techniques

In the reliability-life techniques the items are related by means of a logic diagram. Other inputs are discrete probabilities, failure time distributions, etc. The techniques are denoted as conventional, general two-state, and N-state. Approaches using only two states will be referred to as general or conventional depending upon the generality of the assumptions. For electrical circuits the conventional approach, assuming parts as either failed or non-failed, is the most popular. The N-state technique refers to the use of three or more modes of operation of the components of the equipment. Additional states such as failed open, failed short, and drift may be included in the analysis.

The typical outputs are system indices (such as the estimated reliability of successful performance, mean-time-between-failure, etc.), sensitivity information, and optimization of system configuration.

3.0 Performance Variability Techniques

Performance variability techniques are mathematical procedures for treating the continuous variation of performance characteristics using models (either mathematical or physical) which provide relationships between equipment performance attributes and part and interface characteristics. The different procedures are based primarily on the nature of the input data (limits, distributions, processes) and on the model (physical or mathematical). The techniques, their inputs and outputs are described in the following three sections.

3.1 Inputs

The inputs to such an analysis are mathematical models of the general form

$$Y_j(t) = g_j[X_1(t), \ldots, X_L(t), U_1(t), \ldots, U_M(t)], j = 1, 2, 3, \ldots, N,$$

or physical models such as a breadboard, prototype, or the production items. In addition, the part and interface characteristics are required and are to be expressed as a function of the operational profile of the equipment when possible. The form of the models and the part and interface data is related to the analysis technique.

3.1.1 Modeling Concepts

Mathematical Models

The models relating the performance attributes to the interface and internal part characteristics may be derived from basic theory, for example, by use of equivalent circuit h-parameters in the case of transistor circuits. On the other hand, these models may be obtained empirically by testing the physical model (e.g. breadboard circuits) with prescribed alterations or simulated changes in the part characteristics. The performance attributes of the physical models are measured, and these results are used in a least squares analysis to obtain a prediction equation relating the performance to the interface and part characteristics. Such an equation is limited in usefulness by the ranges of the parameter variations prescribed. The ranges must be selected to include the expected variation of the parameter for the duration of the mission. Furthermore, in order to perform a least squares analysis a form of the model must be assumed on the basis of an engineering analysis of the element under evaluation. For example, it may be assumed that the form is linear or exponential.

Finally computerized models such as NET-1 use a topological description of the circuit as input. The computer program uses a steady state and transient equation to describe the circuit behavior. In this case the model does not become available in explicit form to the user of the program. However, the computer may be used a sufficient number of times to obtain a relationship by means of regression methods between the performance attributes and the interface or part characteristics of interest.

Physical Models

The physical model may be a breadboard of the circuit for experimental observation, a prototype, or production items to be used in field operations.

3.1.2 Part and Interface Characteristics

The part and interface characteristics to be used in the analysis may take the form of the expected limit of variation of the independent variables, distributions of the variable at discrete time during the mission life, or that of a random process over time. These data may be either specified (given) or physical (parts or equipments).

Specified Data

The given data may be available from manufacturer's data sheets, IDEP reports, ECRC data summaries, or ~~some~~ related data retrieval centers such as PRINCE, or they may be generated internally from routine or special test efforts.

Physical Data

The variations in the variables may be available physically as replaceable samples of parts or equipments that are used in the physical model.

3.2 Procedures

The various analysis techniques cited in the reliability literature for this category are primarily circuits oriented. They all tend to follow the general outline shown below.

Basic Procedure

a. Select the performance attributes of interest. These could be functional outputs, specific performance characteristics or environmental outputs.

b. Develop the deterministic mathematical models at nominal conditions relating the performance attributes to part characteristics, and functional inputs.

c. Estimate the variability of the part characteristics and functional inputs. These include initial (manufacturing) variations, aging effects, and the influence of environmental inputs.

d. Compute various quantities related to possible performance failure modes. The first two steps below provide results possibly useful for reliability improvement, while the third step provides a reliability index. These are:

   1. Establish the expected variability of and possibly the correlation between the performance attributes.
   2. Identify sources of performance attributes variability. Possible sources include contributions from the linear, non-linear, and interaction behavior of the deterministic models, and from variations of correlation between the independent variables.
   3. Predict the probability of successful performance by assigning limits to the expected performance attribute variations.

The various indices which are computed can be used for identifying designs which are susceptible to failure, and for providing redesign guidance. They are also useful for comparing alternate design approaches, and for aiding the assignment of specification limits. Normally the estimate of the probability of acceptable performance that can be obtained from a performance variations analysis is not highly precise as a result of the lack of precision in the data on part and interface characteristic behavior over time.

The various techniques for applying the above basic procedure have been classified as shown below and in Figure 5 of Section 2.

Performance Variability Techniques

a. End Limit (Worst Case and Sensitivity) Analyses
    1. Analytical
    2. Experimental
b. Distributions at Fixed Time
    1. Moments
    2. Simulation
    3. Analytical
    4. Experimental
    5. Discrete States
    6. Miscellaneous
c. Time Varying Distributions

    Repeat Fixed Time Techniques (1, ..., 5) at Discrete Times
d. Methods of Random Processes
    1. Analytical
    2. Experimental

The terms used for the various categories have been selected based on their capability to infer what is involved and accepted usage. The terms have primary reference to the manner by which the computations for obtaining the performance attribute variations are performed, the modeling procedure (empirical or theoretical), or the manner by which the variability of the independent variables are described. The conventional expressions of dependent and independent variables are used in this report. A dependent variable could be a functional output or an element performance attribute. An independent variable could be a functional input, an environmental input, or a part characteristic.

Each of these techniques is not necessarily suitable for the three uses cited in the basic procedure. For example, the end limit techniques are not usually expressed in a probabilistic manner, and therefore are not suitable for explicitly obtaining a reliability or life index.

Each technique is briefly discussed, and references are given. Approximately 120 references were found on these approaches in a partial search of the last several years literature.

3.2.1 End Limit Analyses (Sensitivity and Worst-Case)

3.2.1.1 Analytical

End-Limit approaches are based on variability limits, and do not usually have any probabilistic considerations. The simplest approach conceptually is to compute all possible (2^n) performance values. Specializations have been developed and programmed which are somewhat different approaches to the worst case concept. One specialization aimed at efficiency is to first use partial derivatives to determine the direction of the performance attribute change, and then compute the performance attribute worst case by selecting the appropriate high and low limits. Another specialization is to investigate design tolerance adequacy and interaction effects by determining the region of successful operation; such two-factor contour plots have been programmed and are called "schmoo plots". These techniques are referred to as MANDEX and "Parameter Variation Method" in West and Scheffler (1961). End limit techniques are suitable for investigating the areas of variability, sensitivity, and interactions. As no probabilistic considerations are included, there is no treatment of correlation between either independent or dependent variables. End limit techniques are not used for obtaining probability quantities for reliability or life. Some advantages of the limit approach compared to the lack of an organized variability effects analysis are simplicity for obtaining either assurance of drift reliability or a starting place for redesign; and, if variation data is available, it tends to specify limits (rather than distribution). Limitations are primarily the possible over-conservatism leading to increased requirements on the rest of the system, i.e. increased parts, power dissipation, size, and weight, and thereby increasing the opportunity for a catastrophic failure. Figure 6 illustrates the procedures for this approach.

Example 1 - End Limit Analysis - Analytical Procedure

Static Inverter Voltage Regulation Loop

Inputs

A static inverter under design and development at Marshall Space Flight Center was selected as the equipment for trying and evaluating the various basic reliability analysis techniques. The static inverter function and complete analysis are described in technical report No. 2 and Vol. 2 of the final report for this project.

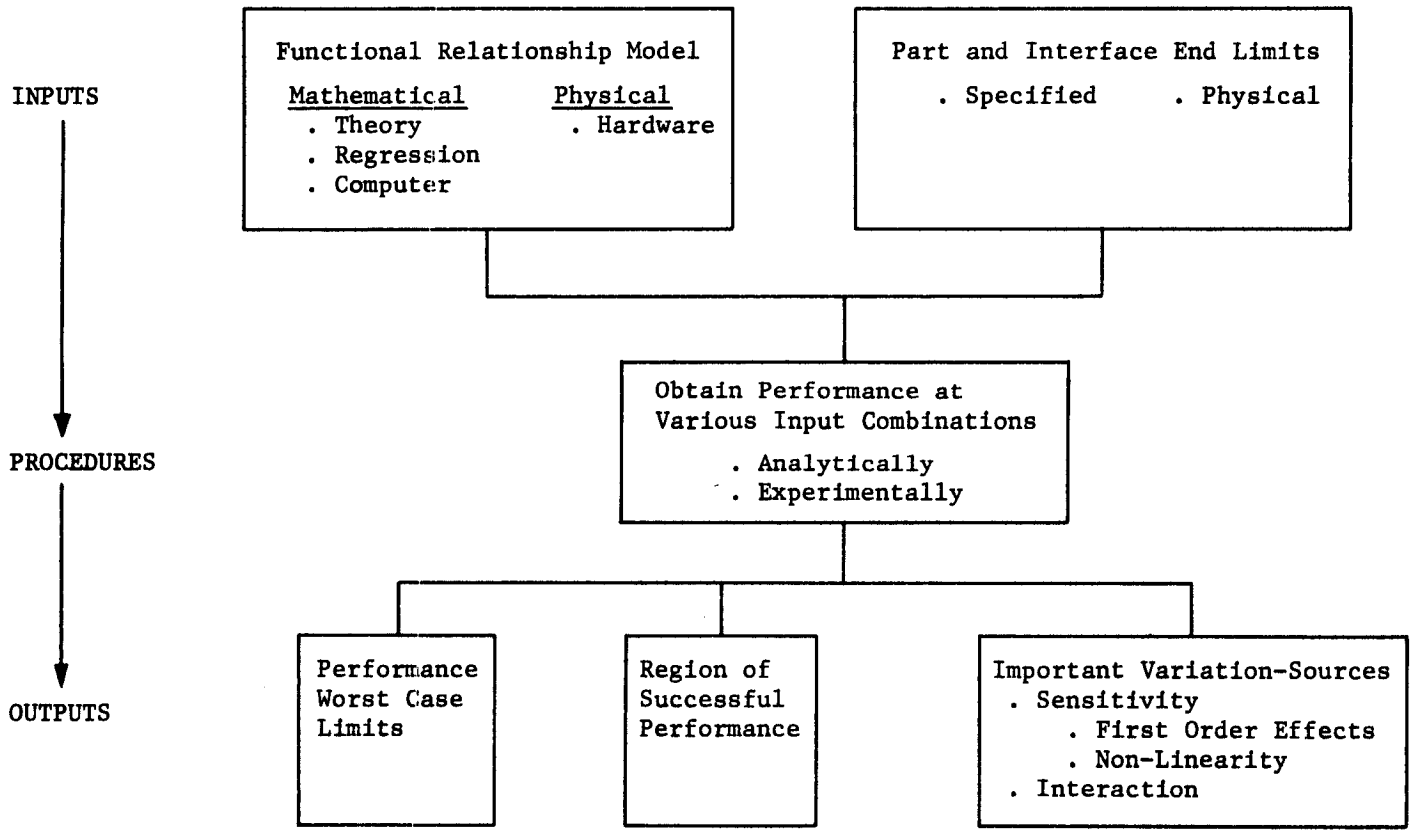

Figure 6 - End Limit Techniques (Worst Case and Sensitivity)

The model for the analysis is a system of differential equations in the form

$$\frac{d^2V}{dt^2} + A_1 \frac{dV}{dt} + A_0 V = B_0 + B_1 V_{in}\,\tau$$

$$\frac{d\tau}{dt} + k\tau = C_1 + C_2 V,$$

where

V = average three-phase output voltage,

V_{in} = input dc voltage,

τ = magnetic amplifier output pulse duty period,

and the coefficients A_0, A_1, ..., C_2, and k are complicated function of circuit part and interface characteristics, e.g.

$$C_2 = \frac{3\sqrt{2}}{\pi} \frac{R73 + \alpha R74}{R73+R74+R75} \frac{N_g N_{c1}}{V_g R_{c1}} \left\{\frac{N_{c1}^2}{R_{c1}} + \frac{N_{sh}^2}{R_{sh}}\right\}^{-1}$$

The complete equations are given in Vol. 2. For the steady state solution one obtains

$$V = \frac{kB_0 + B_1 C_1 V_{in}}{kA_0 - B_1 C_2 V_{in}} ,$$

or

$$V = g(V_z, R73, R75, V_{in}, z_L, \ldots) .$$

The nominal values and the expected deviations of the characteristics from their respective nominal values are given in Table 1 below. The expected extreme deviation of the i-th variable is denoted by h_i and the computer uses two steps each of size $h_i|2 = DX_i$.

Table 1

Nominal Values and Expected Deviations
From Nominal (h) of Some Typical Part
and Interface Characteristics

Variables	Nominal Values X(I)	Expected Deviations (h)
V_z	8.4 volts	0.21 volts
R73	1100 ohms	20.76 ohms
R75	20,000 ohms	500 ohms
V_{in}	28 volts	2.24 volts
.	.	.
.	.	.
.	.	.
V_g	12 volts	0.42 volts

Analysis

The model and the variations of the variables are inputs to a computer program for sensitivity analysis as described in Appendix C. This program computes the first and second partial derivatives of V with respect to each of the variables, the sensitivity of V with respect to each variable, and checks for interaction and non-linearity of V as a function of each of the variables.

Output

The output of such an analysis is given in the tables on the following pages. The output in Table 2 includes the values of the voltage V for five equally spaced values of each of the independent variables in the mathematical model. These values are referred to as Y(X-2DX), Y(X-DX), Y(X), (the nominal value appears at the bottom of the table because it is identical for each row) Y(X+DX), and Y(X+2DX). Y' and Y" are the first and second partial derivatives of the performance with respect to the indicated variable in the first column. The column headed by SENSITIVITY-LINEAR is the linear measure of sensitivity given by

$$LS_i = \frac{Y'h_i}{Y(X)} \quad , \quad h_i = 2DX_i \quad ,$$

Table 2

Moment and Sensitivity Analysis - Static Inverter Voltage Regulation Loop

FIRST AND SECOND PARTIAL DERIVATIVES (Y' AND Y'') OF V L WITH RESPECT TO X

X	Y(X-2DX)	Y(X-1DX)	Y(X+1DX)	Y(X+2DX)	PARTIALS Y'	PARTIALS Y''	SENSITIVITY LINEAR	SENSITIVITY NON-LIN
R67	.11498E 3	.11500E 3	.11503E 3	.11505E 3	.86263E -2	-.13889E -3	.28125E -3	-.84905E -5
R69	.11505E 3	.11503E 3	.11500E 3	.11499E 3	-.86651E -2	.14709E -3	-.27453E -3	.84905E -5
K PH	.11505E 3	.11503E 3	.11500E 3	.11499E 3	-.54950E 5	.19727E 11	-.26038E -3	.25472E -4
R''G	.11515E 3	.11508E 3	.11495E 3	.11489E 3	-.23556E -1	.41574E -3	-.11317E -2	.55189E -4
R W	.11501E 3	.11501E 3	.11502E 3	.11502E 3	.30518E -2	-.24414E -3	.53066E -4	-.42453E -5
V IN	.11501E 3	.11501E 3	.11502E 3	.11502E 3	.34151E -2	-.38926E -3	.66509E -4	-.84906E -5
V G	.11489E 3	.11495E 3	.11508E 3	.11514E 3	.30169E 0	.22144E -1	.11017E -2	.16981E -4
C	.11502E 3	.11502E 3	.11502E 3	.11502E 3	.13563E 4	-.43403E 11	.17689E -5	-.42453E -5
R S	.11502E 3	.11502E 3	.11502E 3	.11502E 3	.56514E -3	.00000E 0	.35377E -6	.00000E 0
L	.11502E 3	.11502E 3	.11502E 3	.11502E 3	.57542E 1	-.39856E 6	.24764E -5	-.42453E -5
R P	.11502E 3	.11502E 3	.11502E 3	.11502E 3	-.47472E -1	-.27127E 2	-.24764E -5	-.42453E -5
PHIK	.11508E 3	.11505E 3	.11499E 3	.11496E 3	-.73913E 6	.14973E 12	-.51898E -3	.42453E -5
PHIS	.11507E 3	.11505E 3	.11499E 3	.11496E 3	-.74544E 6	.17361E 12	-.48608E -3	.42453E -5
V Z	.11224E 3	.11363E 3	.11641E 3	.11779E 3	.13227E 2	.22144E -1	.24150E -1	.42453E -5
V CE	.11502E 3	.11502E 3	.11502E 3	.11502E 3	-.11393E -1	-.15625E 1	-.24764E -5	-.42453E -5
R73	.11688E 3	.11594E 3	.11411E 3	.11322E 3	-.88062E -1	.14729E -3	-.15895E -1	.27594E -3
R74	.11521E 3	.11511E 3	.11492E 3	.11482E 3	-.38574E -1	.78125E -4	-.16769E -2	.84905E -5
R75	.11251E 3	.11367E 3	.11637E 3	.11772E 3	.54040E -2	.00000E 0	.23492E -1	.00000E 0

ALL X AT NOMINAL, Y(X) = .11502E 3

STD DEV OF Y(X), .10056E 1

Table 3

Worst Case Limits - Static Inverter Regulation Loop

WORST CASE LIMITS

VALUE OF VARIABLE AT LOWER LIMIT AND AT UPPER LIMIT ,			X	DX
R67	.14625E 3	.15375E 3	.15000E 3	.18750E 1
R69	.14934E 3	.14206E 3	.14570E 3	.18220E 1
K PH	.22345E -4	.21255E -4	.21800E -4	.27250E -6
R''G	.11603E 3	.10497E 3	.11050E 3	.27630E 1
R W	.98000E 2	.10200E 3	.10000E 3	.10000E 1
V IN	.25760E 2	.30240E 2	.28000E 2	.11200E 1
V G	.11580E 2	.12420E 2	.12000E 2	.21000E 0
C	.18500E -5	.21500E -5	.20000E -5	.75000E -7
R S	.47280E 1	.48720E 1	.48000E 1	.36000E -1
L	.16005E -2	.16995E -2	.16500E -2	.24750E -4
R P	.40600E 0	.39400E 0	.40000E 0	.30000E -2
PHIK	-.31492E -5	-.33107E -5	-.32300E -5	.40380E -7
PHIS	.30750E -5	.29250E -5	.30000E -5	.37500E -7
V Z	.81900E 1	.86100E 1	.84000E 1	.10500E 0
V CE	.10250E 1	.97500E 0	.10000E 1	.12500E -1
R73	.11208E 4	.10792E 4	.11000E 4	.10380E 2
R74	.20500E 3	.19500E 3	.20000E 3	.25000E 1
R75	.19500E 5	.20500E 5	.20000E 5	.25000E 3

WORST CASE LIMITS AND NOMINAL VALUE

V L	.10726E 3	.12324E 3	.11502E 3

INTERACTION CHECK USING 1ST AND 2ND DEGREE TERMS OF TAYLOR SERIES

V L	.10708E 3	.12304E 3

INTERACTION CHECK USING 1ST DEGREE TERMS OF TAYLOR SERIES

V L	.10703E 3	.12299E 3

GOODNESS OF FIT USING 1ST AND 2ND TERMS OF TAYLOR SERIES

VARIABLES	Y(X-2DX)/Y(X)	1.-SENS	1.-SENS+NON LIN	Y(X+2DX)/Y(X)	1.+SENS	1.+SENS+NON LIN
R67	.99972E 0	.99972E 0	.99971E 0	.10003E 1	.10003E 1	.10003E 1
R69	.10003E 1	.10003E 1	.10003E 1	.99972E 0	.99973E 0	.99973E 0
K PH	.10003E 1	.10003E 1	.10003E 1	.99974E 0	.99974E 0	.99976E 0
R''G	.10012E 1	.10011E 1	.10012E 1	.99892E 0	.99887E 0	.99892E 0
R W	.99994E 0	.99995E 0	.99994E 0	.10000E 1	.10000E 1	.10000E 1
V IN	.99992E 0	.99993E 0	.99992E 0	.10001E 1	.10001E 1	.10001E 1
V G	.99890E 0	.99890E 0	.99891E 0	.10011E 1	.10011E 1	.10011E 1
C	.99999E 0	.10000E 1	.99999E 0	.10000E 1	.10000E 1	.99999E 0
R S	.10000E 1	.10000E 1	.10000E 1	.10000E 1	.10000E 1	.10000E 1
L	.10000E 1	.10000E 1	.99999E 0	.10000E 1	.10000E 1	.99999E 0
R P	.10000E 1	.10000E 1	.99999E 0	.10000E 1	.10000E 1	.99999E 0
PHIK	.10005E 1	.10005E 1	.10005E 1	.99948E 0	.99948E 0	.99948E 0
PHIS	.10005E 1	.10005E 1	.10005E 1	.99951E 0	.99951E 0	.99952E 0
V Z	.97585E 0	.97585E 0	.97585E 0	.10241E 1	.10241E 1	.10242E 1
V CE	.10000E 1	.10000E 1	.99999E 0	.10000E 1	.10000E 1	.99999E 0
R73	.10162E 1	.10159E 1	.10162E 1	.98437E 0	.98410E 0	.98438E 0
R74	.10017E 1	.10017E 1	.10017E 1	.99832E 0	.99832E 0	.99833E 0
R75	.97650E 0	.97651E 0	.97651E 0	.10235E 1	.10235E 1	.10235E 1

i.e. $100 \times LS_i$ is the expected percent variation in the performance with respect to the expected maximum deviation of the indicated variable. The NON-LIN column contains the second degree effects. Quick examination reveals that V_z, R73, and R75, are the important variables and that each contributes approximately a 2 percent change in the voltage. Only R73 has a non-linear contribution exceeding 0.01 percent.

The last line in Table 2 gives the estimated standard deviation of the performance attribute based on the first order terms of the Taylor series expansion of the functional model. The adequacy of the first order approximation is checked in additional outputs in following Tables.

Table 3 contains the values of the independent variables used in obtaining the lower limit and the upper limit in columns 2 and 3 respectively. Columns 4 and 5 contain the nominal values and the DX-values. The worst-case values of the performance are given at the bottom of columns 2 and 3, and the nominal value below column 4.

The worst-case limits are obtained under the assumption that the performance is essentially a linear function of the independent variables over the specified ranges of the variations and that the worst-case performance occurs at a vertex (corner) point. This assumption is very often valid because the ranges are small and the function is sufficiently linear to determine the worst-case by examining only the first-order partial derivatives and evaluating the functional model at the appropriate extreme point only on the basis of the first-order partials. However, it is easy to suggest examples for which the worst-case does not occur at an extreme point. The output of the computer program checks for the validity of the linearity assumption and the degree of interaction which may be present. The row following the worst-case values of Table 3 contains a check of the contribution to the performance variability as a result of the product terms (interaction terms) and higher order terms in the variables. The value 123.0 is the upper limit computed from the Taylor series expansion using only the linear (c_1X_1) and pure second degree ($c_{11}X_1^2$) terms and does not use terms like $c_{12}X_1X_2$ and higher degree terms. Hence, the closeness of 123.0 to the actual performance value 123.2 indicates that the linear terms are sufficient if one is willing to accept an error of less than 0.25 volt in 115 volts, 123.0 vs 123.2 (actual and 107.1 vs 107.3 (actual).

Table 3 contains a check of the adequacy of using the first, and the first and second degree terms for one variable at a time. Column 2 contains the actual performance at the lower extreme value of the indicated variable divided by the nominal value. The third and fourth columns give the Taylor series approximation to the same value using the first order and the first and second order terms respectively. The last two columns provide the same comparison for the upper extreme values. The nearly identical values in columns 2 and 3 (also columns 5 and 6) indicates that the use of linear terms is sufficient.

In summary, this analysis has identified the important variables, those which contribute most to the variation in the performance. It has provided a sufficient check of assumptions required for making a moment analysis using only a linear approximation. It has provided estimates of the worst-case values which can be used to assess the adequacy of the design.

3.2.1.2 Experimental

It is, of course, possible to conduct an end limit investigation through physical modeling. In addition to using breadboards, an automatic instrument is commercially available which iteratively steps through all possible 2^n combinations of a maximum of 16 part characteristic worst-case limits as described by Oliveto (1964). These experimental techniques are suitable for investigating performance variability, sensitivity, and interactions. The advantages and limitations of analytical end limit techniques which are discussed above in Section 3.2.1.1 are also applicable to these experimental ones. Also, other advantages here are those inherent in a realistic physical model over a mathematical model, the ability to investigate circuits where mathematical models are not readily available, and the feasibility of quickly investigating many different limit combinations. In addition to the need for worst-case parts and the instrument, there is some loss of insight into the circuit analysis which would normally come from mathematical modeling. It is, of course, possible to do both an analytical and an experimental end limit analysis in order to obtain the benefits of both.

Example 2 - End-Limit Analysis - Empirical Procedure

Static Inverter Voltage Regulation Loop

Inputs

On the basis of the sensitivity analysis of the mathematical model for the average three-phase output voltage the most important variables or parameters are V_z, R73, R74, R75, V_{in}, and V_g. To check the analytical results, changes in the values of these variables were simulated or made through part substitutions according to the design indicated in Table 4. The nominal or mean values of the part characteristics are denoted by a zero, the low and high values by -1 and 1 respectively. All variables except the one for which sensitivity measurements were being made were held at their nominal values in runs numbered 2 - 13.

These runs were repeated for values of the gain parameter, N_f = 0,1,2,3, and 4. In addition at least two independent measurements were made of the voltage for several of the designated runs. A total of 28 runs were made. The results for N_f = 4 are given in Table 5.

Table 4

Variation of Part and Interface Characteristics

Run No.	V_z	R73	R74	R75	V_{in}	V_g
1	0	0	0	0	0	0
2	-1	0	0	0	0	0
3	1	0	0	0	0	0
4	0	-1	0	0	0	0
5	0	1	0	0	0	0
6	0	0	-1	0	0	0
7	0	0	1	0	0	0
8	0	0	0	-1	0	0
9	0	0	0	1	0	0
10	0	0	0	0	-1	0
11	0	0	0	0	1	0
12	0	0	0	0	0	-1
13	0	0	0	0	0	1

Table 5

Results of Sensitivity Experiment (N_f = 4)

Run No.	Average 3ϕ - voltage (V)
1	115.16, 115.43, 115.45, 115.29, 115.46, 115.41, 115.57
2	112.52, 112.24
3	117.77, 118.26
4	117.82
5	113.14
6	114.90, 114.92
7	115.46
8	112.67
9	118.02
10	115.47, 115.49
11	115.40, 115.41
12	115.35, 115.25, 115.35
13	115.58, 115.67, 115.57

Analysis

These data were used to obtain a linear empirical relationship between the voltage and the six part and interface characteristics. The model was assumed to be of the form

$$V = \beta_0 + \beta_1 V_z + \beta_2 R73 + \beta_3 R74 + \beta_4 R75 + \beta_5 V_{in} + \beta_6 V_g + \varepsilon ,$$

where $\beta_0, \beta_1, \ldots, \beta_6$ are the unknown coefficients to be estimated by the method of least squares on the basis of the observed values of V for corresponding values of the variables and ε is the deviation between the observed voltage V and the mean voltage as given by the model. The deviation ε includes, for example, measurement variation and a measure of the inadequacy of the model. For example, a linear model may not be sufficient and ε would include the higher order (non-linear) effects.

Outputs

The prediction equation for V using N_f = 4 is

$$\hat{V} = 115.36 + 11.97\ \Delta V_z - 0.0870\ \Delta R73 + 0.00547\ \Delta R75$$

$$- 0.079\ \Delta R74 - 0.014\ \Delta V_{in} - 0.061\ \Delta V_g\ ,$$

where $\hat{V}$ is the predicted mean value of V as a linear function of the observed variables, and ΔV_z ..., ΔV_g are the deviations of the respective variables from their nominal values, $\overline{V}_z$, ..., $\overline{V}_g$, i.e.,

$$\Delta V_z = V_z - \overline{V}_z, \text{ etc.}$$

The sensitivity of V to each of the variables can be obtained as

$$LS_i = \frac{b_i}{V_N} h_i,\ h_i = 2DX_i$$

where h_i is the expected deviation of the i-th variable from its nominal or mean value for the mission duration, and V_N is the nominal value of the voltage. These empirical sensitivities were obtained for each of the variables for N_f = 0,1,2,3, and 4. These results for N_f = 0,3, and 4 are recorded in Table 6 for comparison with the analytical sensitivities.

The agreement between the empirical and analytical sensitivities is better than expected. On the other hand it should be noted that the analytical model was modified for N_f = 4 on the basis of empirical results, without which the agreement

Table 6

Comparison of Empirical and Analytical Sensitivities for N_f = 0, 3, and 4.

Variable	$2h_i$	Sensitivity					
		$N_f = 0$		$N_f = 3$		$N_f = 4$	
		Emp.	Anal.	Emp.	Anal.	Emp.	Anal.
V_z	0.42	0.044	0.048	0.043	0.048	0.044	0.048
R73	55	-0.042	-0.043	-0.041	-0.043	-0.041	-0.043
R74	10	0.046	0.046	0.047	0.046	0.047	0.046
R75	1000	-0.00722	-0.0023	-0.00704	-0.0032	-0.00683	-0.0034
V_{in}	4.48	0.00422	0.0037	0.00070	0.00086	0.00054	0.00015
V_g	0.84	-0.00163	0.0006	0.00011	0.0019	-0.00044	0.0022

would have been worse for $N_f = 4$. The variables with small sensitivities did not yield good agreement because the order of magnitude of sensitivity was within the error of measurement.

Remark 1. Note that if the mathematical model were tedious to obtain, good measurements of sensitivity can be obtained from a breadboard model through interchanging parts or simulating changes in the part characteristics. In case of a simple circuit, it may be advisable to build several breadboard models according to a prescribed pattern of variation of the variables and then measure the performances of these circuits under various input, load, and operational profile characteristics.

Remark 2. The selection of the variation of the variables as given in Table 4 is one of several possible selections of experimental designs which could have been used. The literature on statistical design of experiments gives several patterns which one may select. If second-degree effects are expected it is necessary to include the center point (all variables at their nominal levels) in addition to the end points. If no appreciable non-linear effects are expected, if one is constructing several breadboards of the design, and if one can easily alter all part characteristics simultaneously; a preferred statistical design (selection of combinations of part characteristics to be used in the breadboard circuits) is of the type given in Table 7.

Table 7

Variation of Part and Interfact Characteristics

Run No.	V_z	R73	R74	R75	V_{in}	V_g
1	-1	-1	-1	-1	-1	-1
2	-1	-1	-1	1	1	1
3	-1	1	1	-1	1	1
4	-1	1	1	1	-1	-1
5	1	-1	1	-1	-1	1
6	1	-1	1	1	1	-1
7	1	1	-1	-1	1	-1
8	1	1	-1	1	-1	1
9	0	0	0	0	0	0

The runs numbered 1, ..., 8 are the minimum necessary to estimate the effects of each of the variations in the six part and interface characteristics and for the estimates to be uncorrelated. See Addelman (1963) for a discussion of the mathematical properties of such statistical designs. The inclusion of the nominal circuit (all characteristics at their nominal value or 0 level) is for the purpose of checking the adequacy of a linear approximation. Ideally more than one circuit should be constructed having nominal part charactersitics in order to be able to test for the linearity with a reasonable degree of precision. The disadvantage of such a statistical design compared with the one in Table 4 is that it requires changing more than one characteristic (part or input) each time. More care must be exercised when performing the experimental work. Some examples of this type of experiment are given in Tommerdahl and Nelson (1963).

3.2.2 Distributions at a Fixed Time

Performance variability techniques which are probabilistic in nature provide ways to analyze considerations which are not treated in the end limit techniques. The independent variables are described in a probabilistic manner, and are used with the deterministic functional relationship between the independent and dependent variables to obtain probabilistic descriptions of the dependent variables. Figure 7 is a flow diagram of this approach. The probabilistic approach provides analysis methods which are based on a more realistic representation of what physically occurs as compared to limit techniques. Thus probabilistic approaches are usually less conservative than a worst case analysis. Also, the probabilistic approaches allow explicit treatment of the probability of successful performance through the use of pre-assigned bounds. If bounds are assigned to the performance attributes of an equipment, then reliability can be obtained as a function of time. However, if several equipments are combined into a system (or in general if any items are combined) and a functional relationship exists between the performance attributes of these equipments, then the reliability for the combination of equipments cannot be obtained by multiplying the individual equipment reliabilities. A performance attribute variation of one equipment may be compensated for by a performance attribute variation of another equipment. Thus probabilistic techniques for propagating distributions over functional relationships are needed to obtain a combined reliability.

The distribution techniques are generally not applied as widely as the end limit techniques. Primary reasons preventing increased applications are the general lack of precedence for using statistical approaches for performance variations.

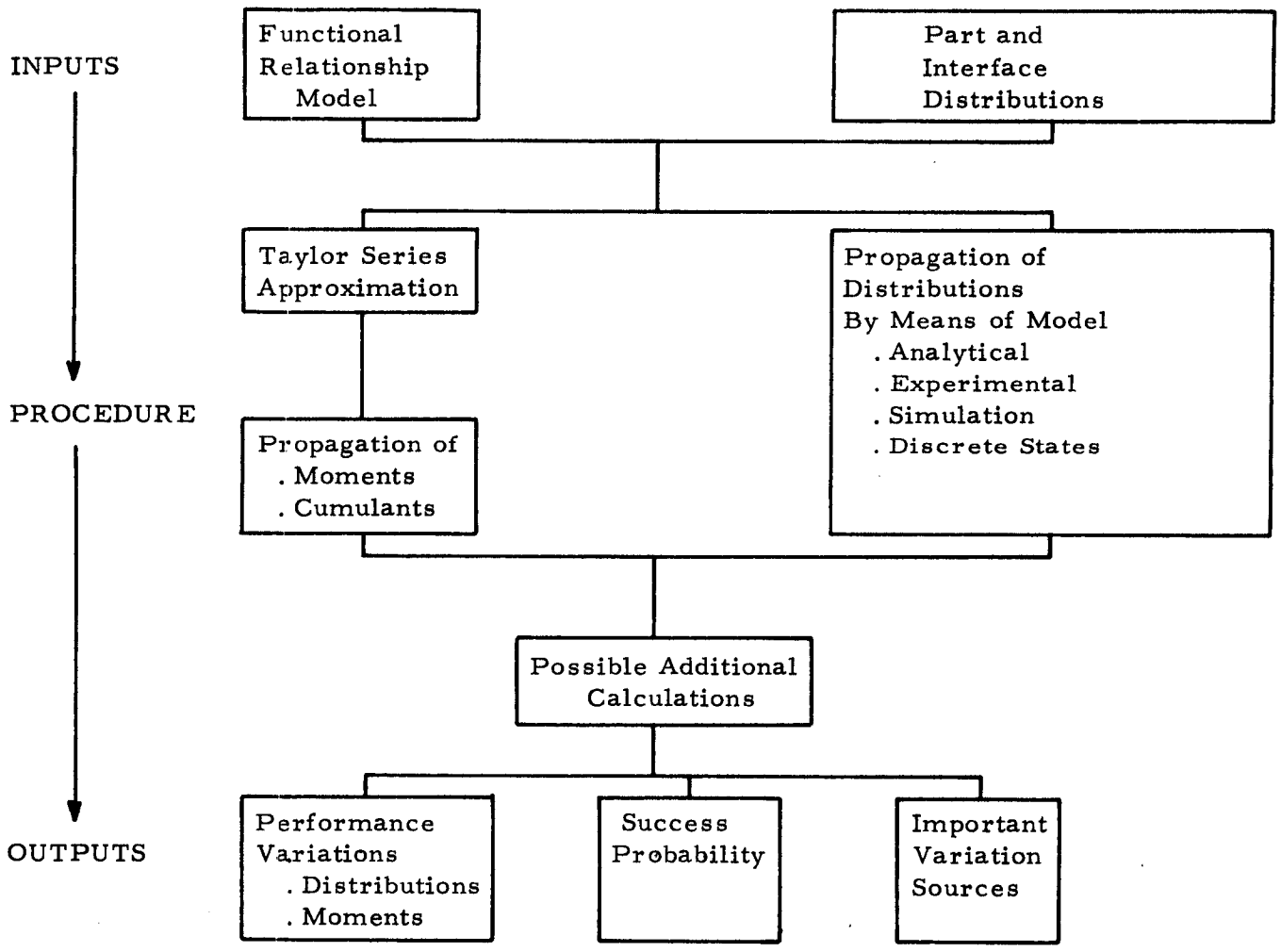

Figure 7 - Distributions at a Fixed Time

3.2.2.1 Moments

In the moments technique the functional relationship is expanded in a Taylor series. Higher order terms may be used, although most references tend to only use the linear terms. Measures of location and variability of the independent variabiles are described by means and central moments. The degree of association which might exist between two independent variables is described by the correlation coefficient. The mean and central moments of the dependent variables are obtained from the application of expected value theory, which gives the mean and central moments of the dependent variable as functions of terms obtained from the Taylor series expansion and the mean and central moments of the independent variables. The distribution of the performance variables is then obtained by either assuming a distribution, or by fitting a distribution by the method of equating moments, for example. Correlation between the various performance attributes can also be obtained by this approach, but this is not usually noted or developed in reliability applications of this technique. The moments method is widely cited in the reliability literature. See, for example, Hinrichs (1956) and Marini, Brown, and Williams (1958).

For simpler problems, requiring the use of only first order terms, it is possible to use this technique without a computer. Conversion of the functional model to a Taylor series yields sensitivity and possibly interaction terms which readily provide information on variability sources. When the problem becomes more complex, as an involved functional relationship and higher moments, a computer is required. Advantages of this approach are simplicity for easier problems, and resultant information on sources of variability. It is often referred to as the propagation of error method.

Example 3 - Fixed Time Distributions - Moments

1) Linear Amplifier

Inputs

Model

The linear amplifier, for which the circuit is shown in Figure 8, is used here and in other sections of this volume to illustrate some of the reliability analysis techniques.

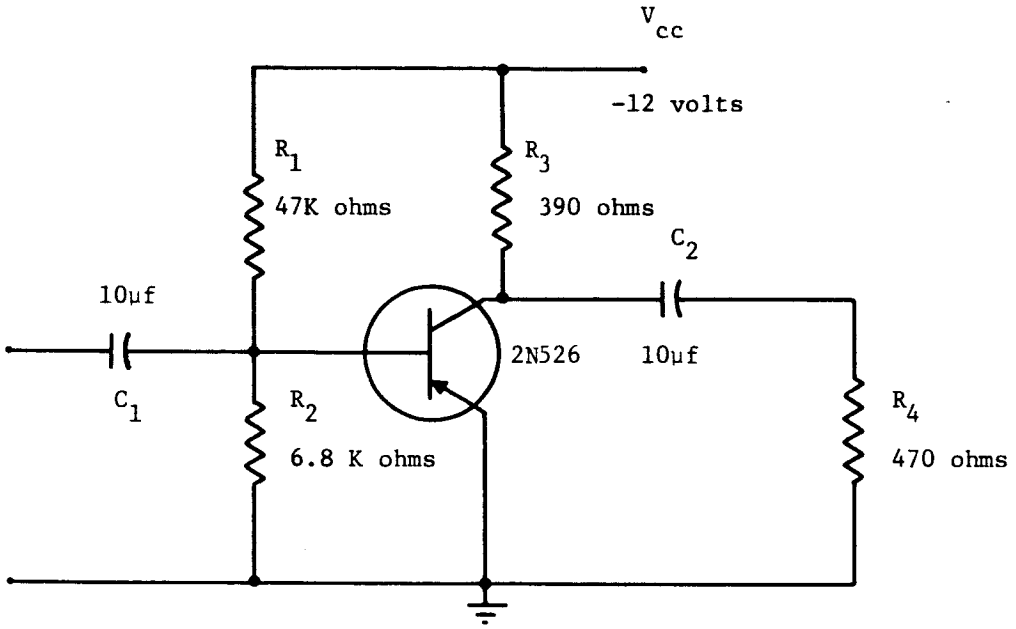

Figure 8 - Linear Amplifier Circuit

For audio frequency applications, the transistor is adequately described by the hybrid or h-parameters. See Tommerdahl and Nelson (1963) for further details on the circuit description and the derivation of the mathematical model. From circuit analysis the model for current gain is as follows:

$$A_i = \frac{R3}{R3 + R4} \; \frac{h_{fe}}{1 + h_{oe} U_2} \; \frac{U_1}{U_1 + \frac{(\Delta^{h_e}) U_2 + h_{ie}}{1 + h_{oe} U_2}}$$

where

$$U_1 = \frac{R1 \; R2}{R3 + R4} \; , \qquad U_2 = \frac{R3 \; R4}{R3 + R4} \; ,$$

$$\Delta^{h_e} = h_{ie} \, h_{oe} - h_{re} \, h_{fe} \; .$$

Part Characteristics

The means and standard deviations of the part characteristics are contained in the following table.

Table 8

Linear Amplifier Circuit Component

Part Parameters-Means and Standard Deviations

Parameter	Mean	Standard Deviation
R1	47.05K ohm	0.97K ohm
R2	7.03K ohm	0.17K ohm
R3	380.9 ohm	8.54 ohm
R4	468.7 ohm	11.14 ohm
h_{fe}	102	11.1
h_{re}	576×10^{-6}	0.46×10^{-6}
h_{oe}	556×10^{-6} mhos	68.6×10^{-6} mhos
h_{ie}	254	24.9

The following matrix contains the correlation coefficients r_{ij} between pairs of the equivalent circuit transistor parameters. The resistances are sampled at random from separate distributions and are uncorrelated with each other and with the h-parameters.

	h_{fe}	h_{oe}	h_{ie}	h_{re}
h_{fe}	1	0.595	0.912	0.165
h_{oe}		1	0.608	0.400
h_{ie}	(by symmetry)		1	0.611
h_{re}				1

Analysis

As suggested in the proposed approach one first performs a sensitivity analysis and checks the function $A_i = g(\ )$ for non-linearity and for interaction. Because the function is essentially linear, the first and second moments of the performance can be obtained from the linear approximation to the performance, i.e.

$$\begin{aligned}\tilde{A}_i &= c_0 + c_1 h_{fe} + c_2 h_{ie} + \ldots + c_8 R4 \\ &= 39.38 + 0.387\Delta h_{fe} + 118.3\Delta h_{re} - 0.742 \times 10^{4} \Delta h_{oe} \\ &\quad - 0.00619\Delta h_{ie} + 0.416 \times 10^{-5} \Delta R1 + 0.186 \times 10^{-3} \Delta R2 \\ &\quad + 0.0512\Delta R3 - 0.0502\Delta R4.\end{aligned}$$

Output

The estimated mean and standard deviation of A_i are given by

$$\hat{\mu}\{A_i\} = 39.38$$

and

$$\begin{aligned}\hat{\sigma}\{A_i\} &= [(0.387)^2 s^2\{h_{fe}\} + \ldots + (-0.0502)^2 s^2\{R4\} + \\ &\quad + 2(0.387)(118.3)\, s\{h_{fe}\}\, s\{h_{re}\}\, r\{h_{fe}, h_{re}\} + \ldots \\ &\quad + 2(-0.742 \times 10^{4})(-0.00619)\, s\{h_{oe}\}\, s\{h_{ie}\}\, r\{h_{oe}, h_{ie}\}]^{1/2} \\ &= 3.91\end{aligned}$$

Remark 1. If the function could not be approximated by a linear function higher order moments and/or distributions of the part characteristics would be required.

Remark 2. The standard deviations and means used in the above analysis were inherent variations in the part characteristics. Variation as a result of operation environment, inputs, stresses, loads, and/or aging were not included. The analysis would be the same except that the total standard deviations would be larger than the above. In addition, correlations between the behavior of the parts characteristics may be introduced as a result of changes in a third variable, such as temperature, affecting two or more part characteristics.

Example 4 - Fixed Time Distributions - Moments

Static Inverter Voltage Regulation Loop - V

Inputs

The mathematical model is the same as described in Section 3.2.1.1. Input means and standard deviations were taken as the nominal values and as one-fourth the expected extreme deviations respectively. The correlations are unknown. However, by good engineering judgement it is feasible to group the pairs of part characteristics as those having high correlation, say r = 0.7, low correlation, r = 0.3, and no correlation, r = 0. The sign of the correlation is taken to be positive or negative if the part characteristics tend to vary in the same or opposite directions respectively.

On the basis of the sensitivity analysis it was inferred that the function could be approximated by a linear model. Hence, the estimated voltage is expressed by

$$\tilde{V} = c_0 + c_1 V_z + c_2 R73 + \ldots + c_7 R''_G \quad ,$$

or

$$\tilde{V} = 115.0 + 0.00541\Delta R75 - 0.0881\Delta R73 + 13.23\Delta V_Z - 0.0386\Delta R74 - 0.745\Delta\phi_K \times 10^6 + 0.301\Delta V_G - 0.0235\Delta R''_G \quad .$$

Output

The estimated mean and standard deviation of V are

$$\hat{\mu}\{V\} = 115.0 \text{ volts, and}$$

$$\hat{\sigma}\{V\} = 1.61 \text{ volts}$$

Remark 1. The analysis is dependent on the assumptions concerning the variations of the part and interface characteristics.

Remark 2. The assumed correlations should be checked for their consistency. The technique for doing this will be discussed under simulation techniques. In short, the matrix of the simple correlations must be positive definite and the square root matrix inversion routine as given by Dwyer (1951).

3.2.2.2 Simulation

The Monte Carlo simulation approach is currently receiving the most attention among performance variability techniques as reflected by reliability publications. The independent variables are each described by their distribution with little restriction on the shape of the distribution. Values of the independent variables are randomly selected, and are used with the functional relationship to obtain values of the dependent variable. Accuracy can be increased by increasing the number of samples. The result is expressed in Sylvania Electronics Systems, (1963) as the distribution of the dependent variables.

Appeal of the Monte Carlo method is based on several points. Little restriction exists on the shape of the distributions, or on the type of functional relationship. Background in probabilistic concepts required for grasping the concept is very small. A computer is required for application, and this is the only aspect which might be a limitation. There is a tendency to be critical of the Monte Carlo approach because it does not inherently yield sensitivity information related to sources of variability. Sensitivity information can be readily added when the basic Monte Carlo approach is augmented by a least squares analysis.

If the method of moments is not satisfactory due to the non-linearities of the functional relationship and furthermore, if no analytical method is easily obtained, one will usually perform a simulation study. The random variables with appropriate distributions are generated and substituted into the mathematical model. This process is repeated many times in order to estimate the performance distribution with the desired precision. The complications of the function and

the distributions offers little difficulty to this technique. Hence, it has been used extensively.

Example 5 - Fixed Time Distributions - Simulation

Static Inverter Voltage Regulation Loop

Input

The mathematical model is the one for the average three-phase voltage, V. The variables were assumed to be normally distributed with the means, variances, and correlations as given in Table 9.

Analysis

One hundred Monte Carlo trials were performed and the resulting performance values were arranged in ascending order, the moments, and measures of skewness and kurtosis were obtained. Finally, the sample cumulative distribution function was fitted by an Edgeworth series using the Hermite polynomials.

Outputs

The outputs of the simulation program are given in Tables 10, 10a, 10b, 10c, and Figure 9. Table 10 contains an input check in order that the mean values, standard deviations, and correlations of the simulated variables can be compared with the input nominal values, standard deviations, and correlations. Table 10a contains the simulated values of the dependent variable or the performance attribute listed in ascending order. Table 10b gives the moments, skewness, and kurtosis of the performance attribute, and Table 10c contains the estimated percentiles of the performance attribute by Edgeworth series for values of performance at its estimated mean values plus multiples of one-half of the estimated standard deviation. Figure 9 gives the observed sample distribution function of average three-phase voltage for the static inverter regulation loop and the fitted Edgeworth series approximation.

Table 9

Inputs - Simulation Analysis for V

MODEL 1, V L

	VAR. NAMES	NOMINAL VALUE	DEVIATION	DISTRIBUTION
1	R67	.15000E 3	.18750E 1	NORMAL
2	R69	.14570E 3	.18220E 1	NORMAL
3	K PH	.21600E -4	.27250E -6	NORMAL
4	R''G	.11050E 3	.27630E 1	NORMAL
5	R W	.10000E 3	.10000E 1	NORMAL
6	V IN	.28000E 2	.11200E 1	NORMAL
7	V G	.12000E 2	.21000E 0	NORMAL
8	C	.20000E -5	.75000E -7	NORMAL
9	R S	.48000E 1	.36000E -1	NORMAL
10	L	.16500E -2	.24750E -4	NORMAL
11	R P	.40000E 0	.30000E -2	NORMAL
12	PHIK	-.32300E -5	.40380E -7	NORMAL
13	PHIS	.30000E -5	.37500E -7	NORMAL
14	V Z	.84000E 1	.10500E 0	NORMAL
15	V CE	.10000E 1	.12500E -1	NORMAL
16	R73	.11000E 4	.10380E 2	NORMAL
17	R74	.20000E 3	.25000E 1	NORMAL
18	R75	.20000E 5	.25000E 3	NORMAL

INPUT CORRELATIONS

```
 .700
 .300 .300
 .700 .700 .300
 .700 .700 .300 .700
 .000 .000 .000 .000 .000
-.700-.700-.300-.700-.700 .000
 .300 .300 .300 .300 .300 .000-.300
 .700 .700 .300 .700 .700 .000-.700 .300
 .000 .000 .000 .000 .000 .000 .000 .000 .000
 .700 .700 .300 .700 .700 .000-.700 .300 .700 .000
 .000 .000 .000 .000 .000 .000 .000 .000 .000 .000 .000
-.300-.300-.300-.300-.300 .000 .300-.300-.300 .000-.300 .000
-.300-.300-.300-.300-.300 .000 .300-.300-.300 .000-.300 .000 .300
 .300 .300 .300 .300 .300 .000-.300 .300 .300 .000 .300 .000 .300-.300
 .700 .700 .300 .700 .700 .000-.700 .300 .700 .000 .700 .000-.300-.300 .300
 .700 .700 .300 .700 .700 .000-.700 .300 .700 .000 .700 .000-.300-.300 .300 .700
 .700 .700 .300 .700 .700 .000-.700 .300 .700 .000 .700 .000-.300-.300 .300 .700 .700
```

Table 10

Input Check - Simulation Analysis for V

INPUT CHECK

MODEL 1, V L

	VAR. NAMES	NOMINAL VALUE	DEVIATION	DISTRIBUTION
1	R67	.14989E 3	.25742E 1	NORMAL
2	R69	.14562E 3	.23953E 1	NORMAL
3	K PH	.21811E -4	.33375E -6	NORMAL
4	R''G	.11035E 3	.33151E 1	NORMAL
5	R W	.99909E 2	.13633E 1	NORMAL
6	V IN	.28005E 2	.11033E 1	NORMAL
7	V G	.12017E 2	.25189E 0	NORMAL
8	C	.19982E -5	.86240E -7	NORMAL
9	R S	.47970E 1	.53300E -1	NORMAL
10	L	.16512E -2	.28111E -4	NORMAL
11	R P	.39988E 0	.49969E -2	NORMAL
12	PHIK	-.32294E -5	.46787E -7	NORMAL
13	PHIS	.29994E -5	.46014E -7	NORMAL
14	V Z	.84014E 1	.13647E 0	NORMAL
15	V CE	.99917E 0	.16619E -1	NORMAL
16	R73	.10995E 4	.15508E 2	NORMAL
17	R74	.19983E 3	.33151E 1	NORMAL
18	R75	.19978E 5	.29783E 3	NORMAL

INPUT CORRELATIONS

```
 .852
 .684 .723
 .795 .773 .570
 .875 .817 .752 .751
 .192 .145 .239 .135 .181
-.397-.402-.036-.520-.294 .204
 .466 .542 .419 .491 .492 .152-.267
 .883 .890 .711 .772 .904 .242-.247 .528
 .230 .201 .298 .013 .306 .070 .294 .027 .309
 .810 .765 .722 .734 .892 .129-.212 .404 .870 .309
-.300-.215-.322-.210-.510-.017-.134-.089-.422-.293-.443
 .112 .087 .299-.142 .163 .089 .429 .000 .261 .284 .164-.133
 .036 .015 .132-.207 .095 .064 .496-.016 .152 .352 .145-.271 .431
 .671 .634 .665 .493 .599 .189-.085 .469 .679 .144 .579-.145 .615 .113
 .834 .774 .670 .710 .826 .146-.248 .450 .929 .249 .847-.438 .175 .172 .607
 .833 .804 .618 .772 .912 .116-.339 .484 .886 .251 .867-.450 .111-.022 .527 .780
 .877 .797 .657 .849 .802 .142-.431 .570 .855 .104 .801-.299 .022-.016 .612 .824 .796
```

Table 10a

Simulated Voltages in Ascending Order

DEPENDENT DATA LISTED IN ASCENDING ORDER

I	I/N	V L		I	I/N	V L		I	I/N	V L	
1	.010	.1121E	3	45	.450	.1146E	3	90	.900	.1172E	3
2	.020	.1121E	3	46	.460	.1146E	3	91	.910	.1172E	3
3	.030	.1124E	3	47	.470	.1146E	3	92	.920	.1172E	3
4	.040	.1124E	3	48	.480	.1146E	3	93	.930	.1173E	3
5	.050	.1125E	3	49	.490	.1147E	3	94	.940	.1176E	3
6	.060	.1125E	3	50	.500	.1147E	3	95	.950	.1176E	3
7	.070	.1126E	3	51	.510	.1147E	3	96	.960	.1179E	3
8	.080	.1127E	3	52	.520	.1147E	3	97	.970	.1179E	3
9	.090	.1127E	3	53	.530	.1148E	3	98	.980	.1183E	3
10	.100	.1128E	3	54	.540	.1150E	3	99	.990	.1183E	3
11	.110	.1128E	3	55	.550	.1151E	3	100	1.000	.1186E	3
12	.120	.1129E	3	56	.560	.1151E	3				
13	.130	.1129E	3	57	.570	.1151E	3				
14	.140	.1130E	3	58	.580	.1151E	3				
15	.150	.1131E	3	59	.590	.1152E	3				
16	.160	.1131E	3	60	.600	.1153E	3				
17	.170	.1131E	3	61	.610	.1155E	3				
18	.180	.1132E	3	62	.620	.1156E	3				
19	.190	.1133E	3	63	.630	.1157E	3				
20	.200	.1133E	3	64	.640	.1157E	3				
21	.210	.1134E	3	65	.650	.1157E	3				
22	.220	.1134E	3	66	.660	.1157E	3				
23	.230	.1135E	3	67	.670	.1157E	3				
24	.240	.1135E	3	68	.680	.1159E	3				
25	.250	.1137E	3	69	.690	.1159E	3				
26	.260	.1137E	3	70	.700	.1159E	3				
27	.270	.1138E	3	71	.710	.1159E	3				
28	.280	.1138E	3	72	.720	.1160E	3				
29	.290	.1139E	3	73	.730	.1160E	3				
30	.300	.1140E	3	74	.740	.1162E	3				
31	.310	.1140E	3	75	.750	.1162E	3				
32	.320	.1140E	3	76	.760	.1163E	3				
33	.330	.1141E	3	77	.770	.1163E	3				
34	.340	.1143E	3	78	.780	.1164E	3				
35	.350	.1143E	3	79	.790	.1166E	3				
36	.360	.1143E	3	80	.800	.1166E	3				
37	.370	.1144E	3	81	.810	.1167E	3				
38	.380	.1144E	3	82	.820	.1168E	3				
39	.390	.1145E	3	83	.830	.1168E	3				
40	.400	.1145E	3	84	.840	.1169E	3				
41	.410	.1145E	3	85	.850	.1169E	3				
42	.420	.1145E	3	86	.860	.1169E	3				
43	.430	.1145E	3	87	.870	.1169E	3				
44	.440	.1146E	3	88	.880	.1170E	3				
				89	.890	.1171E	3				

Table 10b

Moments of V

MOMENTS

	V L	
FIRST	.114976E	3
SECOND	.264643E	3
THIRD	.652214E	2
FOURTH	.148192E	4
STD. DEV.	.165563E	1
SKEWNESS	.197728E	0
KURTOSIS	.211276E	-1

VARIANCE - COVARIANCE MATRIX, ORDER 1

V L	.367077E	1

Table 10c

Percentage Points for V by Edgeworth

Z = 113.10859	F(Z) =	-.95190E -2
Z = 113.66622	F(Z) =	-.14936E -1
Z = 111.70364	F(Z) =	.22405E -2
Z = 112.52146	F(Z) =	.77118E -1
Z = 113.33910	F(Z) =	.21750E 0
Z = 114.15673	F(Z) =	.37755E 0
Z = 114.97435	F(Z) =	.51297E 0
Z = 115.79198	F(Z) =	.63934E 0
Z = 116.60960	F(Z) =	.78189E 0
Z = 117.42724	F(Z) =	.91182E 0
Z = 118.24486	F(Z) =	.98705E 0
Z = 119.06249	F(Z) =	.10096E 1
Z = 119.88011	F(Z) =	.10075E 1

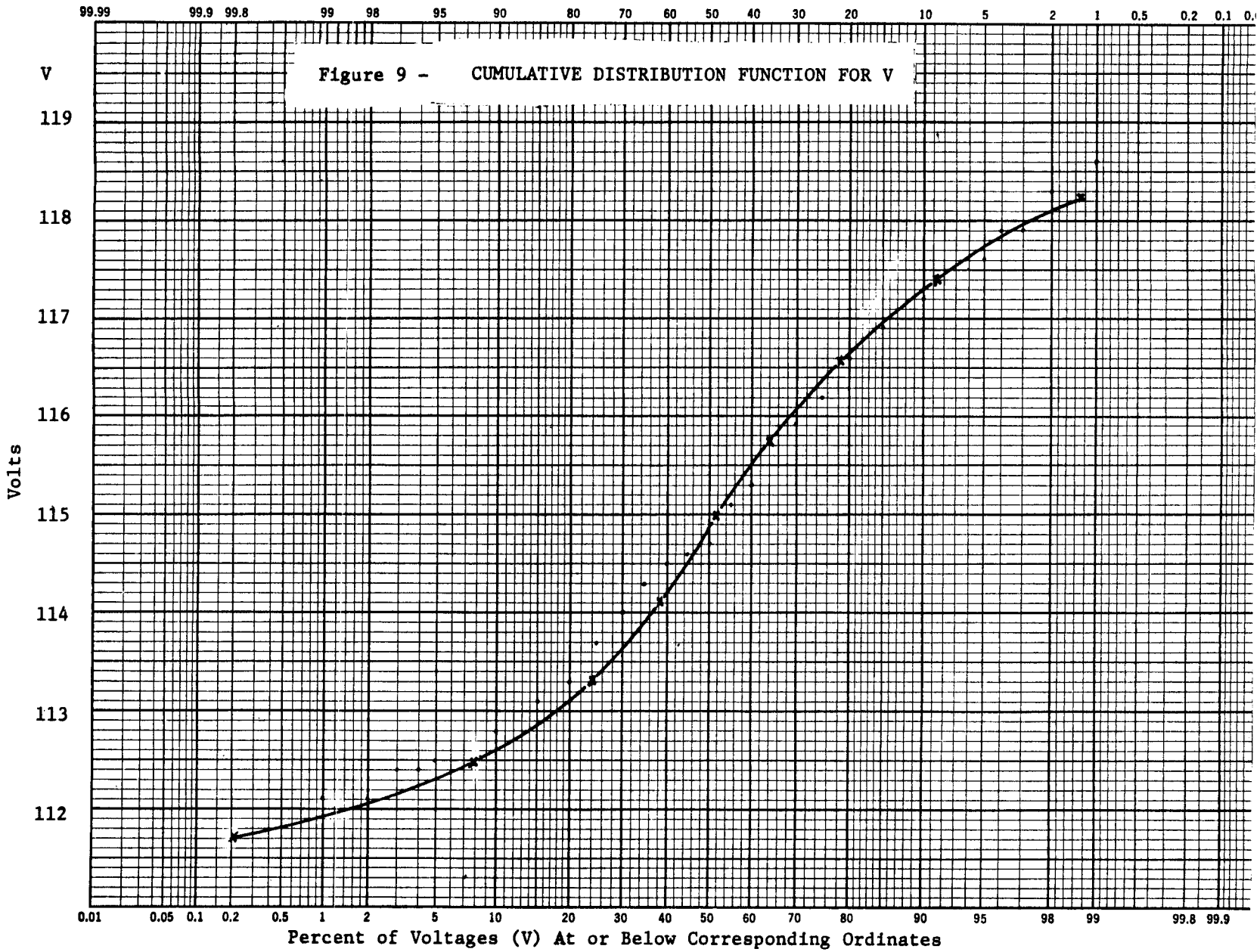
Figure 9 - CUMULATIVE DISTRIBUTION FUNCTION FOR V
V
Volts
119
118
117
116
115
114
113
112
99.99 99.9 99.8 99 98 95 90 80 70 60 50 40 30 20 10 5 2 1 0.5 0.2 0.1
0.01 0.05 0.1 0.2 0.5 1 2 5 10 20 30 40 50 60 70 80 90 95 98 99 99.8 99.9
Percent of Voltages (V) At or Below Corresponding Ordinates

3.2.2.3 Analytical

Distributions of dependent variables which are not approximations can be conceptually obtained, however, applications are very limited because of the analytical complexities. Here the variability of the independent variables is represented by their joint density function. When a single dependent variable is under consideration, its distribution function can be obtained by integration over the appropriate region of the joint density function of the independent variables as given in Parzen (1960). This is the region where the dependent variable is equal to or greater than the solution of the function relating the dependent and independent variable. An example of this notion is convolution for sums. This approach can be extended to more than one independent variable, where the various dependent variables are functions of the same independent variables. Here the joint density function of the dependent variables is obtained from the product of the joint density function of the independent variables and the Jacobian of the functions relating the independent and dependent variables. This technique can also be applied to the single independent variable case.

These approaches have recently received some exploratory attention from a reliability viewpoint. See, for example, Reza (1964) and Shooman (1965). Any application to realistic problems appears very limited. However, it should be noted that engineering applications to certain situations have been developed, e.g. Davenport (1958) in communications theory. This exact approach is cited because it is another method for handling the propagation of distributions, and it is used in certain engineering fields dealing with probabilistic concepts and in the development of many classical statistical relationships. It also is worth pursuing in order to obtain a better understanding of the performance variations problem.

The use of a rigorous mathematical approach for obtaining the distribution of the performance measure of interest, given a mathematical model and distributions of the part and interface characteristics, is seldom possible. For example, the current gain of the simple linear amplifier is given as a complicated function of eight (8) part characteristics. The average three-phase voltage of the static inverter is given as an extremely complex function of the part and interface characteristics. Thus even if one knows the distributions of variables precisely one cannot readily obtain the distributions of the performance measures. In such cases one usually resorts to simulation. However, there is often the possibility of applying mathematical rigor to an approximate functional relationship. In both

the above cases the complicated function can be approximated by a linear function of certain variables. Furthermore, there are usually only a few important variables.

If the relationship

$$\tilde{y} = g(x_1, x_2, \ldots, x_n)$$

can be approximated by a linear function

$$\tilde{y} = c_0 + c_1 x_1 + \ldots + c_n x_n,$$

it is possible to approximate the distribution of $\tilde{y}$ for certain distributions of the variables x_i, $i = 1, \ldots, n$. For example, if x_i is normally distributed with mean μ_i and standard deviation σ_i and if the correlation between x_i and x_j is ρ_{ij}, then the distribution of $\tilde{y}$ is approximately normally distributed with mean

$$\mu\{y\} = c_0 + c_1 \mu_1 + \ldots + c_n \mu_n,$$

and standard deviation

$$\sigma\{y\} = [c_1^2 \sigma_1^2 + \ldots + c_n^2 \sigma_n^2 + 2c_1 c_2 \sigma_1 \sigma_2 \rho_{12} + \ldots + 2c_{n-1} c_n \sigma_{n-1} \sigma_n \rho_{n-1,n}]^{1/2}.$$

One cannot use the estimated probability of extreme deviations as precise values because the approximation may not be satisfactory for large deviations. The only reason that the above approach is often satisfactory is that for the expected ranges of deviations (usually less than 10 to 20% of the nominal value) the function is approximately linear.

Suppose that $\tilde{y} = g(x_1, \ldots, x_n)$ cannot be adequately approximated by a linear function, but assume that there is only one important variable for which the relationship is non-linear. Thus suppose that

$$\tilde{y} = g(x_1) + c_0 + c_2 x_2 + \ldots + c_n x_n,$$

where x_1 is the variable arbitrarily chosen as the one variable for which the effect is non-linear. The nature of the function $g(x_1)$ can be obtained by means of mathematical approximations for the general function $g(x_1, x_2, \ldots, x_n)$.

Example 5 - Fixed Time Distribution - Analytical

In the case of the function for the current gain of the linear amplifier described in Section 3.2.2.1,

$$A_i \simeq \frac{c_1 h_{fe}}{1 + c_2 h_{fe}} + c_3 + c_4 h_{re} + \ldots + c_{10} R4,$$

and

$$g_1(h_{fe}) = \frac{c_1 h_{fe}}{1 + c_2 h_{fe}} \quad .$$

The function $g_1(h_{fe})$ is immediately obvious from the form of the general function in this case as no approximation is required. The constants c_1 and c_2 are determined by substituting in the nominal values of the part characteristics other than h_{fe}. The constants $c_3, \ldots, c_{10}$ can be determined by using

$$A_i^* = A_i - \frac{c_1 h_{fe}}{1 + c_2 h_{fe}} = c_3 + c_4 h_{re} + \ldots + c_{10} R4,$$

and the first order terms of a Taylor series for A_i^*. In this particular case

$$c_1 = 0.3854, \text{ and } c_2 = 0.1642 \times 10^{-4} \quad .$$

Hence the function is very closely approximated by the use of a linear function as previously indicated. If we let

$$x_2 = c_3 + c_4 h_{re} + \ldots + c_{10} R4,$$

then x_2 is approximately normally distributed with mean

$$\mu\{x_2\} = c_3 + c_4 \mu\{h_{re}\} + \ldots + c_{10} \mu\{R4\} = \mu_2, \text{ say,}$$

and standard deviation

$$\sigma\{x_2\} = [c_4^2 \sigma^2\{h_{re}\} + \ldots + c_{10}^2 \sigma^2\{R4\} + 2c_4 c_5 \sigma\{h_{re}\} \sigma\{h_{oe}\} \rho\{h_{re}, h_{oe}\}$$

$$+ \ldots]^{1/2} = \sigma_2, \text{ say.}$$

Furthermore, h_{fe} and x_2 have approximately a bivariate normal distribution with mean vector $\mu = (\mu_1, \mu_2)$ and covariance matrix, where

$$\varepsilon = \begin{bmatrix} \sigma_1^2 & \sigma_1 \sigma_2 \rho_{12} \\ \sigma_1 \sigma_2 \rho_{12} & \sigma_2^2 \end{bmatrix}$$

where

ρ_{12} is the correlation between h_{re} and x_2 .

At this point it is possible to obtain the probability that A_i is less than or equal to a, i.e.

$$P\{A_i \leq a | \mu, \epsilon\},$$

by numerical integration. Because the function is very nearly linear it is not necessary to use the bivariate normal tables for techniques for performing this integration.

Example 6 - Fixed Time Distribution - Analytical

Static Inverter Voltage Regulation Loop

In the case of the static inverter the average three-phase voltage, $\tilde{V}$, can be expressed approximately as

$$\tilde{V} = 2.3425x + \frac{6.2352}{x} + f(v_z, k_\phi, \phi_k, \ldots) \quad .$$

where

$$x = \frac{R73 + \alpha\ R74}{R73 + R74 + R75} \quad .$$

If

$$\tilde{V} - 2.3425\ x - \frac{6.2352}{x}$$

is used as the dependent variable in the program for sensitivity and worst case analysis, then an approximate expression can be obtained for V as

$$\begin{aligned}\tilde{V} = {} & 2.3425x + \frac{6.2352}{x} + 13.228V_z + 0.19 \times 10^{-3} R75 \\ & - 0.0235\ R''G + 0.301V_G - 0.745 \times 10^{6} \phi_K \\ & - 0.746 \times 10^{6} \phi_s\end{aligned}$$

If V_z, R75, ..., ϕ_s have a multivariate normal distribution with mean values, standard deviations, and correlations given in Table 9, Section 3.2.2.2, then the expression for $\tilde{V}$ can be written as

$$\tilde{V} = 2.3425x + \frac{6.2352}{x} + u$$

where u has mean $\mu\{u\}$ and variance $\sigma^2\{u\}$ as given below.

$$\mu\{u\} = 13.228\ \mu\{V_z\} + \ldots - 0.746 \times 10^{6}\ \mu\{\phi_s\} \quad .$$

$$\sigma^2\{u\} = (13.228)^2\ \sigma^2\{V_z\} + \ldots + (0.746 \times 10^{6})^2\ \sigma^2\{\phi_s\}$$

$$+ 2(13.228)(0.19 \times 10^{-3})\ \sigma\{V_z\}\ \sigma\{R75\}\ \rho\{V_z, R75\} + \ldots \quad .$$

Now the probability that V lies within prescribed bounds i.e., $a \leq V \leq b$, is given by

$$P\{a \leq V \leq b\} = P\{2.3425x + \frac{6.2352}{x} + u \leq b\}$$

$$-P\{2.3425x + \frac{6.2352}{x} + u \leq a\}$$

Thus the problem has been reduced to that of approximating an integral of the bivariate normal density function (assuming that x and u have a bivariate normal distribution) over the region defined by the above equations. Suppose that u and x are independently distributed then

$$P\{2.3425x + \frac{6.2352}{x} + u \leq b\}$$

$$= \int_{-\infty}^{\infty} \frac{1}{\sqrt{2\pi}\ \sigma_x} \exp\{-\frac{1}{2\sigma_x^2}(x-\mu_x)^2\}dx \int_{-\infty}^{b-2.3425x-\frac{6.2352}{x}} \frac{1}{\sqrt{2\pi}\ \sigma_u} \exp\{-\frac{1}{2\sigma_u^2}(u-\mu_u)^2\}du$$

$$= \int_{-\infty}^{\infty} p\{x\}dx \cdot \Phi(b-2.3425x - \frac{6.2352}{x} - \mu_u / \sigma_u)$$

If t is large, $\Phi(t)$, the normal distribution function, may be approximated by

$$1 - \Phi(t) \sim \frac{1}{(2\pi)^{1/2} t}\ e^{-\frac{1}{2}t^2} \quad .$$

See Feller (1950, p. 166 and 179) for a discussion of this approximation. Hence, for this condition the integral reduces to a one dimensional integral which can be evaluated by standard numerical methods, e.g. Simpon's rule.

If the variable x accounted for almost all of the variation in V, it would be possible to approximate the desired probability by ignoring the remaining variables and using

$$P\{V \leq b\} = P\{3.6604 + 2.3425x + \frac{6.2352}{x} \leq b\}$$

$$= P\{2.3425x^2 + 3.6604x + 6.2352 - bx \leq 0\}$$

$$= P\{c(b) \leq x \leq d(b)\}$$

where c(b) and d(b) are the roots of the quadratic equation

$$2.3425x^2 + 3.6604x + 6.2352 - bx = 0.$$

Thus $P\{V \leq b\}$ can be determined for several values of b and the distribution of V can be estimated. Similarly one can determine $P\{V \leq a\}$.

The various approaches to the solution of the probability estimation problem depend on the relative importance (sensitivity) of the variable, whether or not they are correlated, the degree of non-linearity of the most important variable, etc. The techniques suggested are approximations of various types but they should give further insight to the distribution of the dependent variable. Their use may also supplement a pure Monte Carlo simulation.

The fact that a normal distribution has been assumed does not limit the use of some of the above techniques but only some of the specific results. If one assumed a uniform distribution, for example, some of the approximations given above could be replaced by exact values.

If the simplifying assumptions made in the above analysis cannot be made then it would be necessary to use a method of simulation. In order that some of the techniques might be used subject to real world time constraints, a collection of appropriate computer subroutines would be required.

3.2.2.4 Empirical

As stated in Section 2.0 the ideal method for estimating the reliability of an equipment is to observe its behavior under actual environmental conditions. Of course, this procedure is not practical nor usually possible during the early design stages. In the production stage and subsequent usage stages it may be possible to observe the equipment or specific elements under actual conditions. These observations can then be used to estimate some of the characteristics of the distribution of the performance attributes or the distribution. The use of previous test results on similar equipment should be very helpful in the early stages of a testing program. See Section 5 for a discussion of the methods by which one may combine past and present test results.

3.2.2.5 Discrete States

In this technique the distribution of each of the independent variables is represented by dividing the range of each variable into a relatively small number of intervals, and then assigning the probability associated with each interval, i.e., a histogram. Thus the range of an independent variable is covered by a limited number of discrete states. For each combination of the independent variables there will be a resultant value of the dependent variable if only a single value for the independent variable is associated with each interval. The value of the dependent variable is computed directly from the functional relationship, with an associated probability which is computed from the joint probability of the independent variables. If there are m independent variables with n discrete states, then mn values of the dependent variable will be obtained, with each possible combination having an associated probability. In an investigation of this technique it is proposed that the limit values of each interval of the independent variables be used. Here the range of the dependent variable is divided into a number of intervals, k. Now when any of the computed mn intervals of the combinations of the dependent variables overlap any of the k assigned intervals, then the probability associated with the computed interval is proportionally assigned to the k assigned intervals which are overlapped. The probabilities associated with each of the k intervals are added to give the final result, which is the histogram of the dependent variable.

3.2.2.6 Miscellaneous

Two additional approaches for finding distributions have been suggested for reliability applications. They are somewhat similar in that both use the property of the product of characteristic functions to provide distributions of sums. One of these approaches, Gray (1959), uses a picewise polynominal approximation of the distribution of the dependent variable. The other approach, Draper (1961), uses semi-invariants (also called cumulants) to represent the distributions of the independent variables. Semi-invariants are functions of central moments. Here the functional properties are then used to obtain a semi-invariant representation of the dependent variable. Then semi-invariants are converted to central moments, from which the distribution of the dependent variable can be fitted.

These approaches have similar advantages and limitations. Both can treat more complex distributions; neither treats correlation; and non-linear and interaction terms are ignored. There is no evidence of any applications of these; both could be manually applied for simple problems.

3.2.3 Time Varying Distributions

Sometimes the variation of the part characteristics are known at discrete times in the life of the part. For example, it may be known that the mean value and the standard deviation of a part characteristic changes with time according to some empirical relationship. This result can be used in conjunction with a mathematical model to estimate the distribution of the performance attribute at discrete times in the life of the equipment. Figure 10 gives an illustration of a typical time varying distribution. Furthermore, one may know that the part characteristic is temperature dependent and that the effect is reversible. Hence, the times that one selects to study the performance attribute should reflect the nature of the mission profile.

To obtain the distribution empirically from physical models would require a large number of such items for testing purposes. Normally the procedure would be to obtain an empirical model first and then propagate the distributions of the independent variables by means of the mathematical model to obtain estimates of the distributions of the performance attributes.

Example 7 - Time Varying Distributions - Moments

Linear Amplifier

Inputs

See Section 3.2.2.1 for the model and the means and standard deviations of part characteristics at time zero. It is assumed that the transistors h-parameters increase by about 5 percent of their respective nominal values over a period of time of 10^4 hours. Furthermore, none of the resistances are altered significantly. The standard deviation of the drift rate is assumed to be 1 percent. Assuming the drift is essentially linear would allow one to estimate the characteristics of the performance attribute current gain at intermediate times or as a function of time.

Let

$$h_{fe}(t) = h_{fe}(0) + d_1 \mu\{h_{fe}(0)\}t$$

and

$$h_{oe}(t) = h_{oe}(0) + d_2 \mu\{h_{oe}(0)\}t,$$

where d_1 and d_2 are the relative drift rates of the corresponding h-parameters. In this case the means of both d_1 and d_2 are put equal to 5 percent (of mean parameter value at time 0) per 10,000 hours or 5×10^{-6} units per hour. The mean

values of the h-parameters as a function of time are given by

$$\hat{\mu}\{h_{fe}(t)\} = \mu\{h_{fe}(0)\} + \mu\{d_1\}\mu\{h_{fe}(0)\}t$$

$$= 102 + 5.10 \times 10^{-4} t$$

and

$$\hat{\mu}\{h_{oe}(t)\} = 556 \times 10^{-6} + 2.780 \times 10^{-9} t.$$

The variances of the parameters values at time t are

$$\sigma^2\{h_{fe}(t)\} = \sigma^2\{h_{fe}(0)\} + \sigma^2\{d_1\}\,\mu^2\{h_{fe}(0)\}t^2$$

$$= 123.21 + 1.0404 \times 10^{-8} t^2$$

and

$$\hat{\sigma}^2\{h_{oe}(t)\} = 4.706 \times 10^{-9} + 3.091 \times 10^{-19} t^2 .$$

These means and variances are then substituted into the expression for current gain A_i as given in the example in Section 3.2.2.1. Thus the estimated mean and standard deviation of A_i at time t are

$$\hat{\mu}\{A_i(t)\} = \hat{\mu}\{A_i(0)\} + 5.10 \times 10^{-4} t\ (0.387)$$

$$+ 2.780 \times 10^{-9} t\ (-0.742 \times 10^{4})$$

$$= 39.38 + 1.767 \times 10^{-4} t$$

and

$$\hat{\sigma}\{A_i(t)\} = [\hat{\sigma}^2\{A_i(0)\} + t^2\ (0.1575 \times 10^{-8})]^{1/2} .$$

The estimated mean and standard deviation of A_i are shown as a function of time t in Table 11.

Table 11

Mean and Standard Deviaiton of Current Gain A_i Versus Time t

t	$\hat{\mu}\{A_i(t)\}$	$\hat{\sigma}\{A_i(t)\}$
0	39.38	3.910
2500	39.82	3.911
5000	40.26	3.915
7500	40.70	3.921
10,000	41.14	3.930

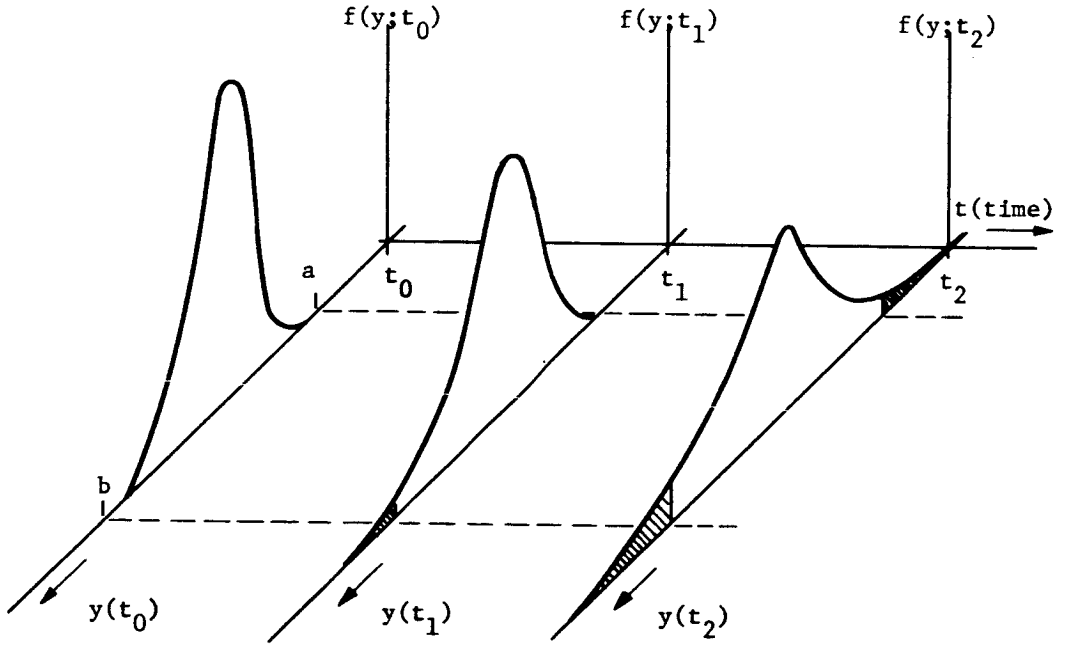

Figure 10 - Drift of Attribute y(t) Illustrated as a Time-Varying Distribution

3.2.4 Random Processes

In some reliability assessment problems the performance attribute of an element may be represented by a stochastic process (such as an error in system output) during the period of operation ($0 \leq t \leq T$, say). Let such a process be denoted by $y(t)$ and suppose there are limits a and b such that $a \leq x(t) \leq b$ ensures satisfactory operation. Some reliability indices which are useful are:

1. The mean and variance of the number of crossings of the bounds a and b,
2. The proportion of time for which the process lies within the limits a, b, (See Figure 11 below for an example).
3. The mean and variance of the area outside the limits $y(t) = a$, $y(t) = b$, and between the curve given by a realization of the process and these limits, and
4. The above indices may also be obtained from curves $u_a(t)$, $u_b(t)$ in place of the limits a, b.

All of the above indices are to be discussed in a book to be published in the near future, Cramer and Leadbetter (1966). In the meantime, one can refer to papers, Leadbetter (1963, 1965), Leadbetter and Cryer (1965), and Cramer (1962) for a discussion of the techniques, assumptions, and the type of results one can obtain. An example is given below to indicate the essentials of the procedures. No theoretical discussions are given herein.

Figure 12 illustrates the procedural flow of the analysis for stochastic process applications.

Example 8 - Random Processes - Analytical

Reliability of a Linear System with Random Inputs--An Example of the Use of the Spectral Moments

The use of the theory of stationary normal processes in evaluating system reliability has been discussed by Cramer (1962). The following discussion is designed to show how these methods can be used in a particular case--that of a single degree of freedom gyro. Specifically we consider the system described by the block diagram at the top of page 63, where Laplace transform notation is employed.

a) Attribute Behavior

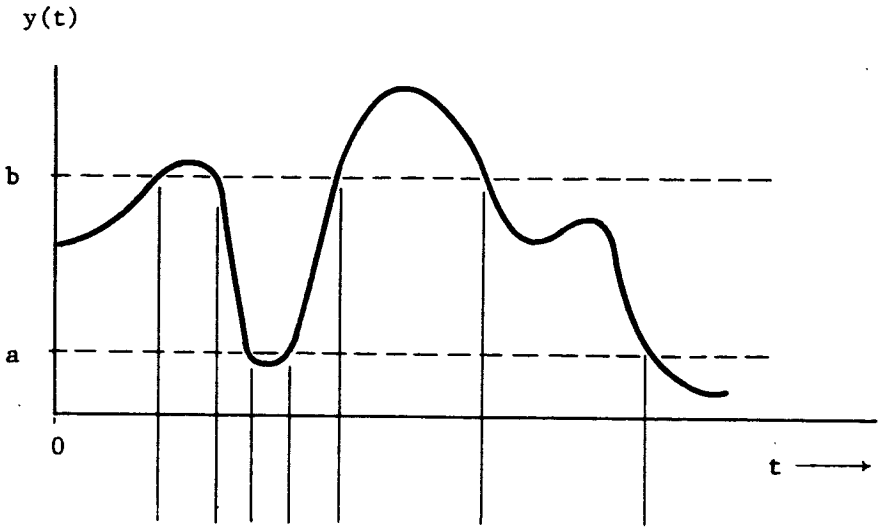

b) Special Function for Defining Failure
w(t) = time that y(t) < a or y(t) > b

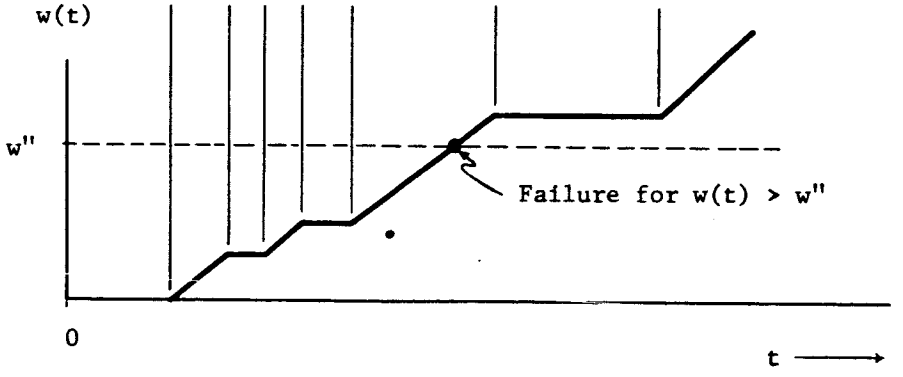

Figure 11 - Example of Non-monotonic Drift Behavior and One Possible Method for Defining Failure

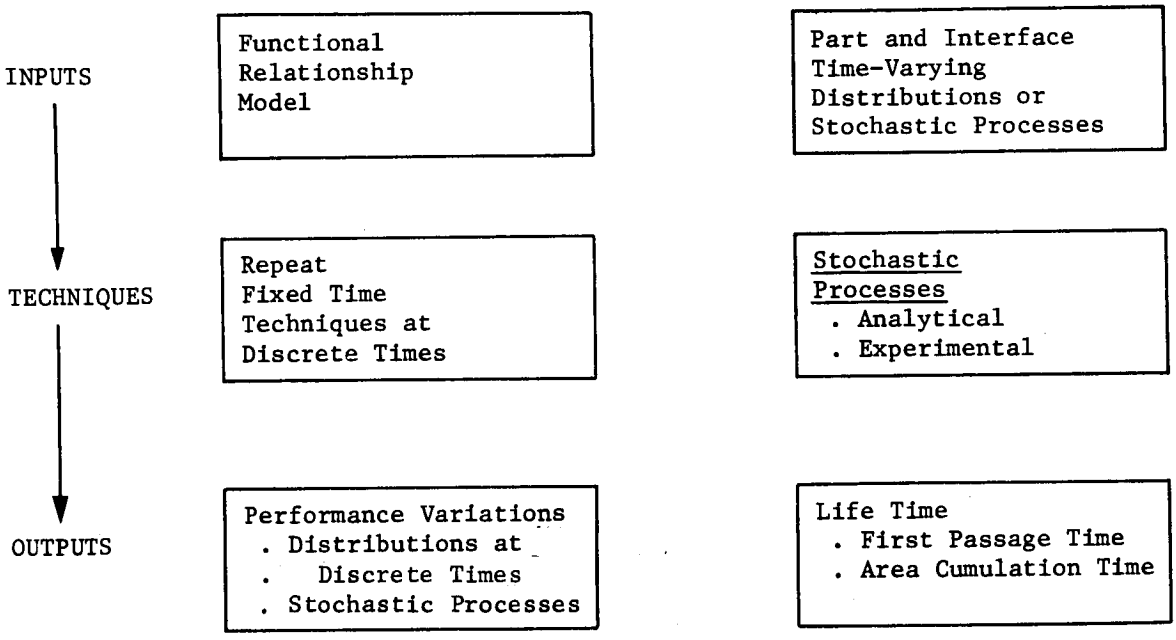

Figure 12 - Time-Varying Distribution and Stochastic Process Techniques

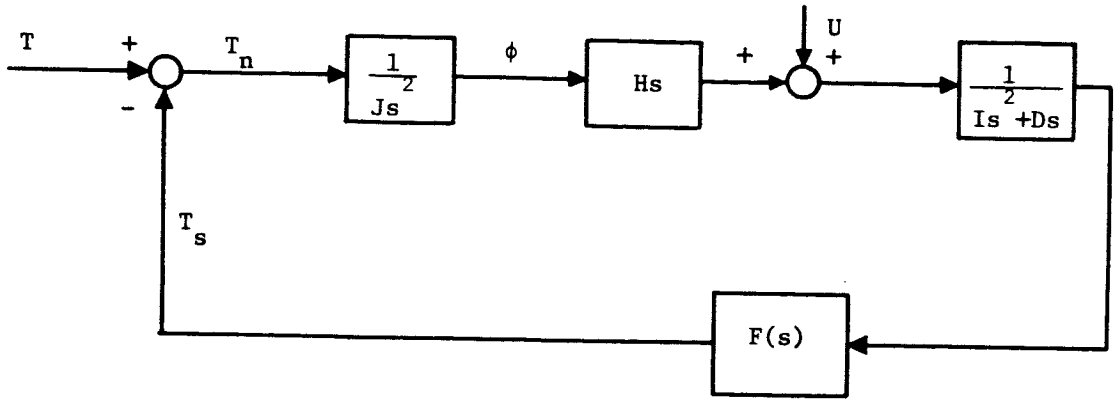

Here T is a random torque about the gyro input axis
U is a random torque about the gyro output axis
I and J are moments of inertia
D is a damping factor
F(s) is the transfer function of the compensating network and servo motor.

As a specific case the following were taken for values of the constants and F(s)

$$J = 10^4,\ I = 10^3,\ D = 10^5,\ H = 10^6 \text{ c.g.s. units}$$

$$F(s) = 5.6 \times 10^4 \frac{(.147s+1)^2}{(.0306s+1)^2}$$

It is assumed that the system can be considered reliable if various quantities of interest stay within (or rarely go outside) certain limits during the period of use. One such quantity is the angular displacement ϕ about the gyro input axis. We have the following equation, from the block diagram, in terms of Laplace transforms, relating ϕ to the input torques T and U:

$$\phi = \gamma(s)T + \delta(s)U$$

where

$$\gamma(s) = (Is + D)/P(s)$$

$$\delta(s) = -F(s)/(sP(s))$$

$$P(s) = Js^2(Is + D) + HF(s).$$

Assume now that U and T are normal stationary processes with zero means and spectral densities $f_U(\lambda)$, $f_T(\lambda)$ respectively.

Then ϕ will not be stationary since the transfer function from U to ϕ has a singluarity at the origin. However, the derivative $\dot{\phi}$ of ϕ is a stationary normal process with zero mean and spectral density given by

$$f_{\dot{\phi}}(\lambda) = \lambda^2 |\gamma(i\lambda)|^2 f_T(\lambda) + \lambda^2 |\delta(i\lambda)|^2 f_U(\lambda).$$

One U-input of great interest is the random part of the torque due to gyro "drift-rate." In general U contains low frequency components only and the function $|\lambda\delta(i\lambda)|$ is nearly constant for λ small (i.e., in the range where f_U is appreciable). Thus the spectrum of $\dot{\phi}$, when U is the only input, is very close to being merely a multiple of that of U. That is, the network does not alter U, as far as its effect on $\dot{\phi}$ is concerned. This means that if U is a stationary normal Markov process, then in the absence of T, $\dot{\phi}$ is also Markov and results obtained for Markov processes may be applied.

Consider now the input T which could, for example, arise from random external disturbances. It will, typically, contain high frequency components. For the purposes of illustration it will be assumed that T has a spectrum of the form $A/(\lambda^2 + \omega_0^2)$, where A and ω_0 are constants. In particular this implies that the variance of T is $\pi A/(2\omega_0)$.

The spectral density of $\dot{\phi}$ can be evaluated using the formula quoted. For the application of the theory of normal stochastic processes, the moments of $f = f_{\dot{\phi}}$ are important. That is, it is necessary to calculate the values of

$$\lambda_{2i} = \int_0^\infty \lambda^{2i} f(\lambda)\, d\lambda$$

for certain values of i. For the use of certain formulae, λ_0, λ_2, and λ_4 are needed. However, in the example chosen, $f(\lambda)$ is of the order λ^{-4} for large λ (which is seen from its definition). Hence only the moments λ_0 and λ_2 exist. However, this is enough for some applications.

Expected Crossings of a Given Level

Consider now the number of crossings of a given level, a >0, which the process $\dot{\phi}(t)$ will make during $(0, T_0)$, the mission duration. Let this number of denoted by $N(T_0)$.

It is known that the expected number of such crossings is

$$E(N(T_0)) = \frac{T_0}{\pi} \sqrt{\frac{\lambda_2}{\lambda_0}}\, e^{-a^2/2\lambda_0} .$$

Using this result we can, from a knowledge of λ_0 and λ_2 , calculate $E(N(T_0))$ for any particular a > 0. The λ's are calculated under the assumptions that the U-process is absent and that the spectral density of T has the form

$$f_T(\lambda) = A/ (\lambda^2 + \omega_0^2)$$

where in Case 1 $\omega_0^2 = 10$, A = 0.10

and in Case 2 $\omega_0^2 = 1$, A = 0.0316

(the A's being chosen so that the total "power" in each of the spectra is the same).

Corresponding to cases 1 and 2 above the following values for λ_0 , λ_2 are obtained (by numerical integration):

Case 1

$$\lambda_0 = 1.09 \times 10^{-12}$$
$$\lambda_2 = 1.29 \times 10^{-10}$$
$$\lambda_0 = .536 \times 10^{-12}$$
$$\lambda_2 = .412 \times 10^{-10} .$$

Using these λ_i, the expected number of crossings has been plotted in Figure 13 as a function of the level a, in each case, for an operating time T of 4 hours.

These calculations have assumed certain forms for the spectra of the "input" disturbances U, T. In practice these spectra would have to be estimated. The estimation of the U-spectrum would presumably offer little difficulty provided continuous records of gyro-tests were available. A corresponding estimation of the T-spectrum is likely to be more troublesome. However, it is felt that it is at least possible that satisfactory estimates of the important quantities could be obtained from analysis of "meteorological-type" data. The only other quantities occurring in the formulae are the gyro constants which, of course, are assumed known.

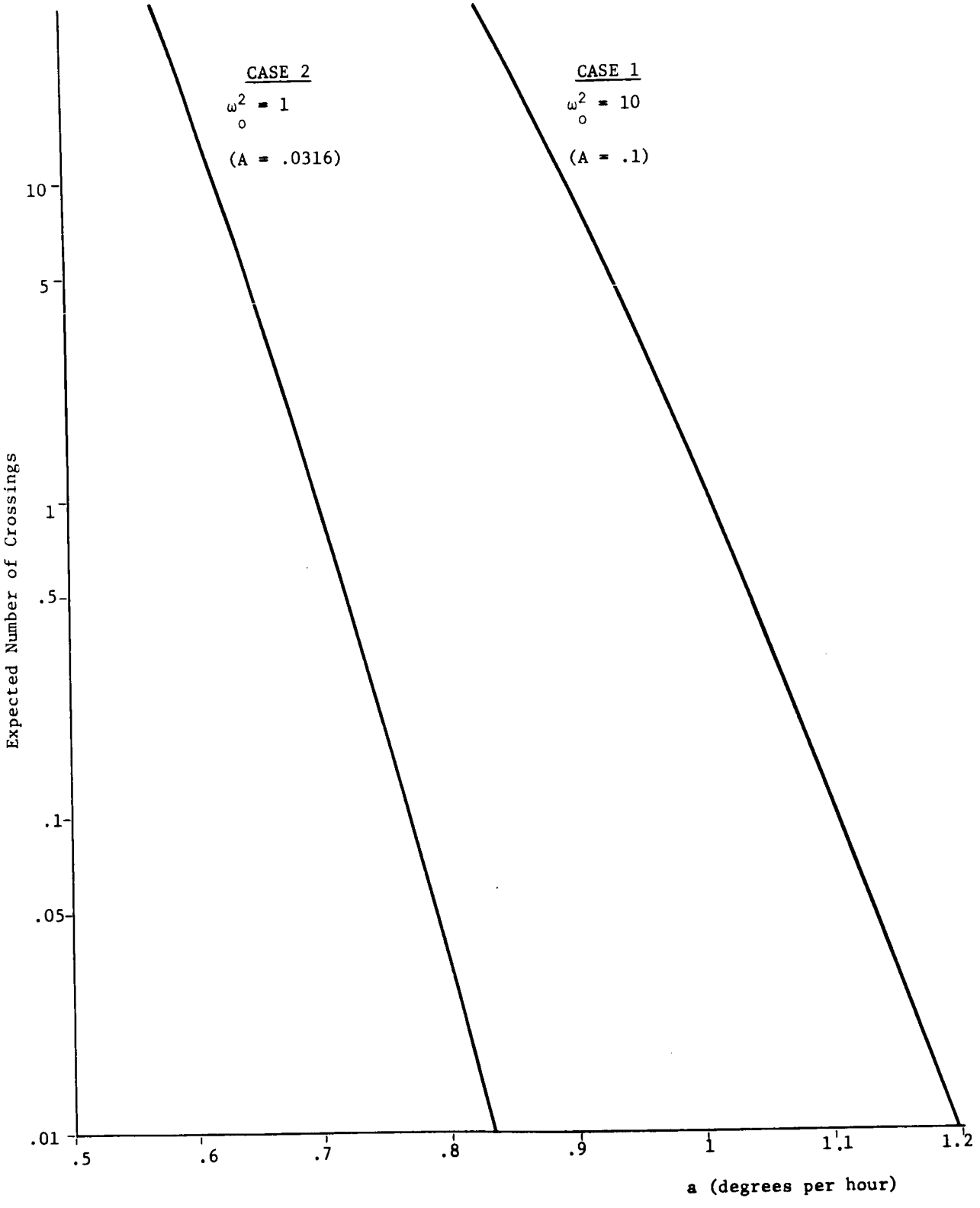

Figure 13 - Mean Number of Crossings

Graphs such as Figure 13, when available, provide useful indices by which to judge the system performance. It is to be noted, however, that in cases such as these we can also obtain an upper bound to the probability that the level a will be crossed at all during (0, T). For if P_j is the probability of exactly j crossings, (j = 0, 1, ...),

$$E(N(T_0)) = \sum_1^\infty j\, P_j$$

$$\geq \sum_1^\infty P_j$$

$$= 1 - P_0 .$$

Hence

$$P_0 \geq 1 - E(N(T_0)) ,$$

i.e., we have a lower bound to the probability, P_0, that there will be no crossing in $(0, T_0)$. Since one way of defining system reliability would be the probability that no crossing of the level a occurred, this would yield

$$\text{Reliability} \geq 1 - E(N(T_0)) .$$

For example, in Case 2, if the level a is chosen to be .75 degrees per hour, then

$$\text{Reliability} \geq 1 - .176$$

i.e. 82 per cent.

The discussion above has been carried on in terms of $\dot{\phi}$--good performance being interpreted in the sense of keeping $\dot{\phi}$ small. (We have been considering a one-sided case but the modification to a 2-sided case involving levels $\pm$ a, is obvious.) In general, other quantities would be of greater interest than $\dot{\phi}$, e.g., ϕ itself, or some velocity error. The discussion for $\dot{\phi}$ was done because of the simplicity introduced by stationarity, but other cases could also be considered.

Finally, the application has been confined to the evaluation of the expected number of crossings. Other quantities such as the mean time outside given levels, mean "area outside given levels" etc., can be calculated in similar ways. The only difficulty arises in cases where it is necessary to use λ_4, which does not exist under the assumptions above. In such cases it would be necessary to use a form for the spectral density $f_T(\lambda)$, say, which tends to zero faster (as $\lambda \longrightarrow \infty$) than that used above.

Markovian Model

Theoretical work and experimental applications have been conducted on using a Markovian model for explicitly extending this discrete-state approach to include time considerations, Brender and Tainiter (1961), Tainiter (1963, 1963a). Here the variations of the independent variables over time are assumed to follow stationary Markov laws. Distributions of the independent variables and the transition probabilities for given time intervals can be obtained. By assigning bounds to the dependent variable, a reliability for a given time is obtained based on the probability of the dependent variable being in a failed state. Techniques for implementing this approach are given in the references, including tests for the validity of the assumptions. A by-product of the procedure cited for efficiently partitioning the independent variables into discrete states is sensitivity information for identifying critical variables. Also, it is noted that correlation among the independent variables can be considered.

3.3 Outputs and Uses

Typical outputs of the analyses are worst case limits of the performance attributes, moment or distributions of the performance at discrete times, sensitivity measures, (linear and non-linear effects), interactions, identification of the most important parameters, and descriptions of attributes as random processes. The outputs may be used in trade-off and optimization analyses, selection or screening techniques, identification of needs for manufacturing control, human factor considerations, and system effectiveness/cost analyses. One of the most important outputs is the identification of design weaknesses and the requirements for improvements in the equipment reliability. The performance and reliability indices so obtained can be used in comparing various designs for selecting parts.

Optimization Techniques

All of the techniques mentioned above are of the type for analyzing a given design, and could be used for comparing alternate designs. However, none were design techniques in the sense of arriving at an optimal condition, i.e. a minimum variation of the performance attributes subject to desired nominal values, where the number of possible alternate designs was so large as to be impracticable to individually analyze for comparison. Various techniques have been developed in recent years for some classes of optimization problems, i.e. linear programming, non-linear programming, and dynamic programming. Here the objective is to find the values for a set of independent variables which will optimize some function of

the independent variables, and at the same time satisfy certain constraints on the independent variables. The linear-programming technique has been proposed by Jelinek (1964) for application to assist in the design of certain circuits. The type of information developed for worst case analysis is similar to that needed for using linear programming procedures. The objective is to minimize voltage and power stress levels, which is related to the criticism that worst case designs are over-conservative. It seems that simultaneous application of worst case design techniques and where the necessary conditions are satisfied, the linear programming optimization technique, show some promise in lowering the detrimental effects of worst case over-conservatism. However, this approach only touches a small part of the over-conservatism problem.

No references were found proposing application of a design optimization approach that would be related in some way to probabilistic performance variation analysis. Simultaneous analysis of the drift and catastrophic failure of several alternate designs was proposed and illustrated by Becker (1963). Here the drift reliability was obtained by placing bounds on the distribution of performance attributes, and the reliability-life indices are obtained from the conventional failure rate vs. stress curves. The resulting reliability predictions have some use for comparison of alternate designs.

Example 9 - Optimization Technique - Specification Problem

The variation of each of the performance measures can be expressed as a function of the specified variation on each of the part characteristics by means of one of the formulas of the previous section, for example,

$$\hat{\sigma}^2\{Y\} = \Sigma\Sigma\, Y_i Y_j \hat{\mathrm{Cov}}\{X_i, X_j\} .$$

Furthermore, it is possible to express cost, weight, size or some other pertinent performance measure as a function of the $\sigma\{X_i\}$. For example, the cost of 10%, 5%, and 1% resistors increases as $\sigma_i = \sigma\{X_i\}$ decreases. These costs can be obtained from catalogues of manufacturers. One problem is to determine for minimum cost the specifications that should be placed on the part characteristics in order that $\hat{\sigma}^2\{Y\} \leq K^2$. Thus one minimizes

$$C = c_0 + \Sigma\, c_i\{\hat{\sigma}_i\}$$

where

c_0 is some fixed cost, and

c_i is the cost of the i-th component as a function of σ_i.

Note that the cost function may be simply a table of values. The minimization of cost is to be done subject to

$$\hat{\sigma}^2\{Y\} \leq K^2$$

or

$$\hat{\sigma}\{Y\} \leq K \ .$$

An example of this approach is given in Tommerdahl and Nelson (1963).

4.0 Reliability-Life Techniques

Reliability-life techniques refer to those procedures which treat each part of an equipment or circuit as being in one of several possible states. The states may be non-failed, failed open, failed short, etc. Either discrete probabilities are assigned to the various states or an appropriate distribution of time to failure is assumed along with the conditional probability of failure in one of the failed states. The widespread approach is to simply have two possible states for an item, non-failed or failed. Approaches using only two states will be referred to as conventional and general two-state, depending upon the assumptions. If the catastrophic failure modes of open and short are used as the failed states and there is a single non-failed state, the item has a total of three possible states. It is, of course, possible to have more than three states. When items are combined an open or short of an item may not result in the combination of items being failed. Approaches where three or more states are considered for an item will be referred to as N-state.

In the reliability-life techniques the items are related on a logic basis such as a tree diagram, truth table, or reliability logic diagram. This structure of the relationship is in contrast to that of the performance variability techniques previously discussed in Section 3, which used the deterministic model of the functional relationship between independent and dependent variables. Further, the performance variability techniques used as the other basic input, variation information of the dependent variables which could be probabilistic or deterministic; the reliability-life techniques use a probabilistic description of the possible states of lower level items as the other basic inputs.

The general procedure for performing reliability-life analyses is outlined below as orientation for discussion in later sections on various techniques. Application of a particular technique emphasizes or de-emphasizes different features of the procedure resulting in different outputs.

Basic Procedure

a. The mission operational profile is used to establish mission functions, operating times and sequences, and the environments.
b. A reliability logic is established for the system being considered. It reflects each function that is to be performed, and the other necessary operational profile considerations of step a. A success diagram for a function to be performed is obtained by selecting the

combination(s) of lower level item states in which the system will be considered to successfully perform.

c. A reliability index is selected for each item included in the logic diagram. It may be of a discrete nature, or a failure time distribution.

d. Mathematical probability models are developed by applying the fundamental probability laws to b and c, or the information in b and c are combined by simulation.

e. The results of d are used for obtaining numerical reliability figures (prediction) and for performing analyses which are useful for reliability improvement (assurance and trade-offs).

These are:

(1) Predict numerical values of system reliability index(es) for the function(s) which the system is to perform.

(2) Identify the sources which have the largest effect on the system reliability by sensitivity analyses.

(3) Establish the possible variability in (1) which results from the uncertainty of numerical values associated with the reliability indices of the lower level items.

(4) Optimize system reliability in applicable situations by appropriate choice (allocation) of the reliability figures of the lower level items or of the configuration of the system.

The procedure described in the above outline is illustrated in the flow diagram of Figure 14. Inputs refer to steps b and c of the outline, step d refers to the procedures, and step e refers to the outputs. Inputs, procedural techniques, and outputs are discussed further in the following sections. The reliability-life techniques were given in Figure 5 of Section 2.3.2.

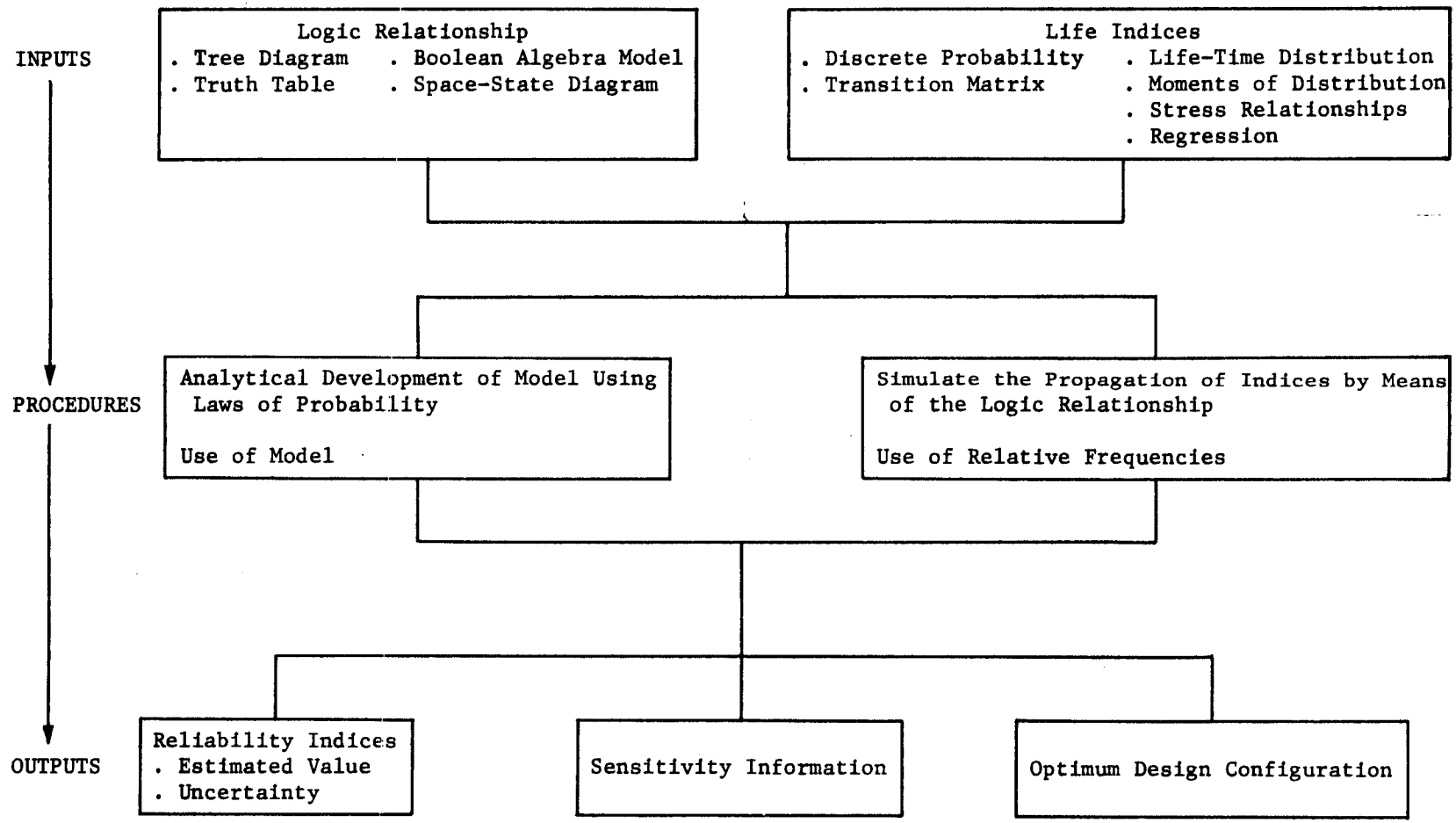

Figure 14 - Reliability-Life Procedural Analysis

4.1 Inputs

The two inputs for a reliability-life technique are (1) the manner by which items are related from the reliability viewpoint and (2) the manner by which the characteristics of each item are described from a reliability-life viewpoint. A perspective of these two inputs to a reliability-life analysis is shown in the flow diagram of Figure 14 . These inputs are discussed in the following sections.

4.1.1 Logic Relationship

The reliability logic may be developed in one of a number of ways, such as a tree diagram, state-space diagram, or truth table, which reflects the possible combinations of the states of the items which make up the system. A Boolean algebra model can also be used to express how the item states must combine in order to achieve successful performance. The complete relationship of possible states is not usually developed to the smallest possible level of detail, but rather simplications or approximations which are apparent are made as given in Muller(1964). Normally only the success paths are used because of their smaller number, and these are often sketched in block diagram fashion. Note that in a complex system determination of the success paths is not a simple task, particularly if there are redundant paths and if items have more than two states. Thus, the logic which is viewed here as an input can be a significant analysis by itself, in terms of both the effort required and of the utility made with just these results. The logic relationship can also include events associated with the operational profile in addition to the states of the physical items comprising the system. Here the events could be environments, inputs, or loads. If these events are included, the input indices will be expanded to include some form of probabilistic index for the states of each event.

4.1.2 Indices

An index is associated with each of the possible states of each item. It may be discrete or be related to a time distribution. The choice depends on such factors as the nature of the item and its use. The manner by which the analysis techniques are classified below is largely related to the form of the indices. Choice of the parameters associated with an index must reflect the effect of the operational environment and of the grade or "quality" level. These reflections are handled in a number of ways, as an "expert opinion", generally accepted graphical relations (handbook curves), or generally accepted analytical relations.

The latter may have a theoretical basis, as the Eyring Model, or reflect historical data, as the regression model Von Alven (1964).

4.2 Techniques

4.2.1 Conventional

There has been a prevalent approach to reliability-life analyses that historically started with the earliest military oriented applications and is currently continuing. An item is simply considered to have two states, failed or non-failed, and each item initially is assumed to be in the non-failed state. Independence is assumed between all items. The reliability of each item is either treated on an attribute basis or on a constant hazard (or failure) rate basis. These conventional approaches are loosely defined by the techniques found in the various reliability handbooks which are DOD sponsored or oriented such as RADC (1961) and Mil Hdbk-217 (1962). Handbooks of this type typically list equations obtained from one of the conventional techniques listed below without deriving the equations.

4.2.1.1 Discrete Probabilities

In this non-parametric approach discrete probabilities are associated with each of the two states of each item. The system reliability is simply the probability associated with the system success state(s). A simple series system has one success state, and a redundant system has more than one. Boolean algebra approaches are sometimes used here, Lloyd and Lipow (1962). This discrete approach is often used for "one-shot" items e.g., explosive devices and systems. A discrete time representation is often used in the initial steps of formulating a more detailed model, where it may be extended to continuous time by either substitution of the continuous time distributions or by using them for obtaining the appropriate reliability index of the discrete model.

A more flexible approach to discrete-time model representations for reliability-life is to employ Markov chains and matrix-theory as given in Feller (1950). The applications in reliability analyses are typical for the assumptions of a first-order Markov process where the transition probabilities are conditional on the preceding step only. A matrix of transition probabilities can be used to represent the discrete time intervals for the successive phases of a mission as described by Jagodzinski (1963). Further, the system can initially be in any state, and each item does not have to be in the non-failed state.

4.2.1.2 Exponential Life Distribution

In more conventional analyses the discrete-time approach is extended to a continuous-time basis by assuming that the time to failure may be described by the negative exponential distribution which exhibits a constant hazard rate. All other simplifying assumptions remain the same as described in Section 4.2.1. The failure rate parameter of the exponential distribution is often considered for either each generic class or each individual part (e.g., resistor or transistor). Tables have been published relating part failure rates to stress levels; see e.g., RADC (1961). The failure rate for serial paths is simply the sum of the individual component failure rates. Another approach for obtaining the index is to consider an item at a higher level of complexity which does not contain redundancy, such as an electronic equipment, and to use regression models which essentially relate the hazard rate of the equipment to a number of variables such as the quantity of various active part types and the nature of their application, such as analog or digital as described in Von Alven (1964). This approach is especially applicable during early time phases of a program prior to detailed equipment design.

Example 9 - Conventional Reliability-Life Technique - Exponential Life Distribution

Static Inverter

A conventional reliability prediction analysis has been performed for the static inverter (SI) circuitry, analyzed in Volume II, assuming the exponential life distribution for components. The analysis was performed with the redundancy as included in the original design and also without redundancy. The analysis is presented here for the purpose of emphasizing the assumptions of the analysis and as an introduction to Section 4, which discusses the integration of performance variation and reliability-life analyses.

The inputs and the method for the failure rate analysis are discussed below. All the assumptions used in the analysis are noted. Some general remarks are made at the end of the example discussion.

Inputs

The inputs to such an analysis are the reliability logic diagram, mission profile, generic failure rates, environmental and application factors.

For purposes of this analysis an earth orbiting satellite mission profile was assumed.

Assumption 1 The profile and the environmental factors (K_E) are given in Table

Table 12

Mission Profile

Stage	Description	Time (hrs.)	Environmental Factors
1	Pre-launch operation	720	0.001
2	Launch	1/4	900
3	Satellite in orbit	720	0.9

Assumption 2 The environmental factors as given in Table 12 are independent of the component or part of the SI and are only dependent on the stage of the mission. The K_E are corrected or adjusted values based on the collection of values reported in Earles (1960 a, b).

The environmental factors for stage j (K_{E_j}) are used to adjust the generic failure rates (GFR) for the particular mission stage. There is a great difference of opinion in the field as to the manner of using these factors. For example, some feel that they (K_E) should be conditional on the part, see for example Ryerson (1965). Others feel that some modeling techniques should be used to adjust the GFR for the environment and application conditions as described in MERIT INDEX of Proven Parts and Sources (1964). Still others prescribe procedures for a more detailed breakdown of the variations in these rates such as that described in Madison, Gottfried, and Herd (1963).

The generic failure rates and the application factors (K_A) were obtained from Earles (1960 a, b).

Assumption 3 The application factors K_{A_i} were all determined for 30°C. and 50 percent of rated electrical stress.

Assumption 4 The GFR's are assumed to be constant for the total mission time.

Assumption 5 The application factors K_{A_i} are assumed to be dependent on the component and not on the mission stage.

Using the above assumptions the failure rate for the i-th component for the j-th mission phase, $\lambda_{i,j}$ can be obtained by

$$\lambda_{i,j} = \lambda_i K_{A_i} K_{E_j} .$$

Method of Analysis

In the following analysis three versions of the SI circuit are considered for comparison with this technique. Logic diagrams of the three versions are shown in Figure 15.

Original Version (Without Redundancy)

The original version of the actual circuit contained redundancy as shown by the center diagram of Figure 15; however, to assess the potential improvement by using redundancy all redundancy is removed yielding the upper diagram containing only series elements. Note that the coupling circuits for terminating the timing

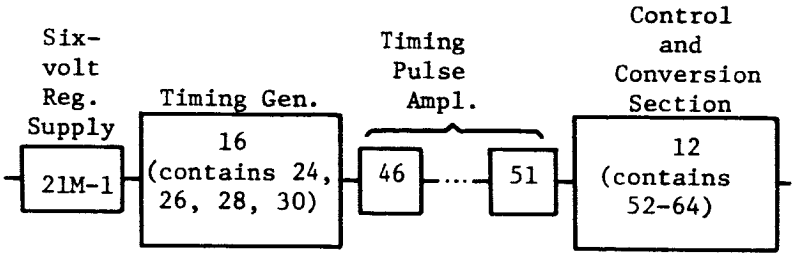

Original Version (without redundancy)

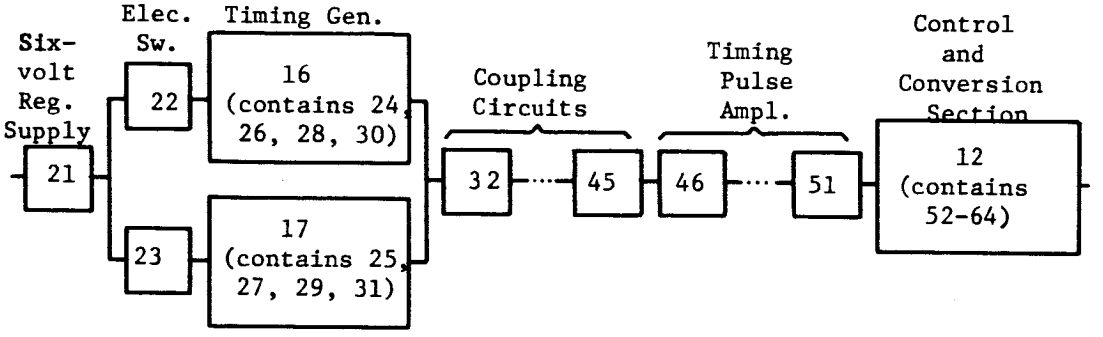

Original Version (with redundancy)

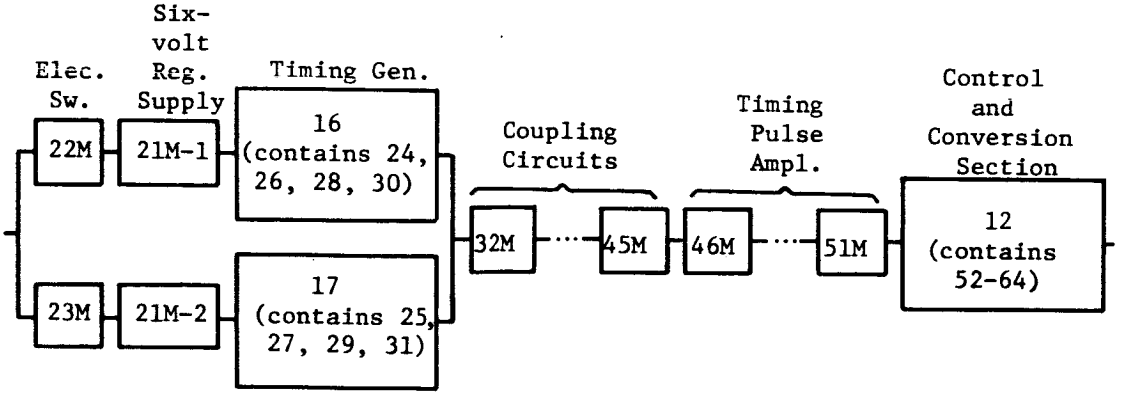

Modified Version (with redundancy)

Figure 15 - Inverter Logic Diagrams for Reliability Prediction

generator redundancy is not required. Also, the original version of the six-volt regulated supply (element 21) contained internal redundancy which is eliminated to provide a simpler version (element 21M-1).

Assumption 6 It is assumed that the failure rates can be summed, and thus independence of the component events of failure or success must hold.

With no redundancy the failure rate for element e in the j-th mission phase is obtained by adding the failure rates of the individual parts.

$$\lambda_{e,j} = \Sigma_i \, n_i \lambda_i \, K_{A_i} \, K_{E_j},$$

where n_i is the number of parts of type i.

Assumption 7 It is assumed that failure of a part, by any mode by which the failure rates are estimated, implies failure of the SI.

Finally, the failure rate of the SI for the j-th mission phase is given by

$$\lambda_{SI,j} = \sum_e \lambda_{e,j}$$

$$\lambda_{SI,j} = \sum\sum_{ei} n_i \lambda_i \, K_{A_i} \, K_{E_j},$$

and the reliability for the entire mission is given by

$$R = \exp\{-\Sigma_j T_j \lambda_{SI,j}\} = \exp\{-\Sigma\Sigma\Sigma_{jei} \, n_i \lambda_i \, K_{A_i} \, K_{E_j} \, T_j\},$$

where T_j is the length of the j-th mission phase. The exponent in the last formula amounts to adding all component failure rates (with each multiplied by its appropriate application factor K_{A_i}) adjusting this product by the environmental factor K_{E_j} for each phase, multiplying by the mission phase times T_j and summing over the mission phases. The procedure above is presented by phase because in general where redundancy is involved, one usually has to perform the calculations for each phase.

Table 13 presents computed values of the expected or mean number of failures, $m_e(\times 10^6)$, by elements for each phase and for the complete mission, i.e.,

$$m_e = \Sigma \, \lambda_{e,j} T_j = \sum\sum_{ij} n_i \lambda_i \, K_{A_i} \, K_{E_j} \, T_j .$$

Table 13

Failure Rate Analysis - Static Inverter Original Version (Without Redundancy)

Expected No. of Failures, ($m_e \times 10^6$)

$m_{e,j}$

Mission Phase

Element No.	1	2	3	m_e Complete Mission
21M	0.02	30.4	87.5	117.9
24	0.35	75.8	218.1	294.3
26	0.10	23.8	68.5	92.4
28	0.17	37.8	108.9	146.9
30	0.14	33.3	95.8	129.3
46 (47,48,49,50,51)	2.22	578.1	1664.2	2244.4
52 (53,54,55,56,57)	6.72	1968.0	5665.1	7637.9
58	0.06	3.2	9.0	12.2
59	0.66	172.8	497.2	670.6
60	0.83	216.7	623.6	841.0
61	0.18	51.3	147.8	199.3
62	0.41	102.9	296.0	399.3
63	0.68	195.5	562.8	758.8
64	0.71	195.9	563.8	760.2
Static Inverter (m_{SI})	13.25	3685.5	10608.3	14304.5

Hence the failure rate for the static inverter (non-redundant case) for the assumed mission is 0.0143. No attempt has been made to obtain limits on this failure rate by using the individual limits as they are not available for many components. The probability of no failure in the SI for the assumed mission is

$$R = e^{-m_{SI}} = 0.986 .$$

Assumption 8 No allowance was made in the above analysis for possibility of failures due to poor workmanship during assembly.

Original Version (With Redundancy)

The logic diagram is shown by the center diagram in Figure 15. The elements with internal redundancy will be considered first.

Assumption 9 The component events of failure (or success) are assumed to be independent in the case of redundant components.

Six-Volt Regulated Supply (Element 21)

This element consists of two redundant paths. For the most demanding phase, i.e. phase 3, the failure rate for one path, is 180×10^{-6}, and the probability that there is no failure in the path is

$$p_0 = e^{-180\times10^{-6}} \simeq 1 - 0.000180 \quad .$$

The probability that either one or both of the paths of element 21 operates successfully is

$$p_{s,21} = p_0 - (1-p_0)^2 \simeq 1 - 0.032 \quad 10^{-6} \simeq 1^-$$

within the limit of the precision of the data.

Diode-Quad Coupling Circuits (Elements 34-45)

Each element consists of two sets of diode-quads (with a center shorting bar) in series logic. Using only 2-state logic the diode-quad fails if a failure occurs in both diodes in a parallel pair. The probability that both diodes of a parallel pair do not fail is

$$1 - p_d^2$$

where p_d is the probability of failure of a single diode. Hence the probability that a quad does not fail is

$$(1 - p_d^2)^2 \quad ,$$

and two sets of quads in series logic

$$(1 - p_d^2)^4 \quad .$$

As $1 - p_d^2$ is very near unity the above may be written as approximately

$$1 - 4p_d^2 \quad .$$

For

$$p_d = \begin{cases} 0.2 \times 10^{-7}; & \text{phase 1} \\ 0.325 \times 10^{-5}; & \text{phase 2} \\ 0.934 \times 10^{-5}; & \text{phase 3} \end{cases}$$

one obtains

$$4p_d^2 = \begin{cases} 0.16 \quad 10^{-14}; & \text{phase 1} \\ 0.422 \quad 10^{-10}; & \text{phase 2} \\ 0.349 \quad 10^{-9}; & \text{phase 3} \end{cases}$$

respectively.

Timing Section (Elements 16, 17, 22, and 23)

Let p_0 denote the probability that the path containing elements 16 and 22 does not fail. Failure of either of these elements results in a loss of redundancy but not failure of the SI. The probability of successful operation of the complete timing section is

$$p_s = p_0^2 + 2p_0(1 - p_0) = 1 - (1 - p_0)^2 .$$

The mean or expected number of failures m_0 for the circuit containing elements 16 and 22 are given below in the following table for each phase along with the values of $1 - p_0$ and $1 - p_s$.

Phase	$m(\times 10^6)$	$1 - p_0$	$1 - p_s$
1	1.41	.0000014	0.0196×10^{-10}
2	341.1	.0003411	0.116×10^{-6}
3	981.7	.0009817	0.964×10^{-6}

The remaining circuits of the SI are in series logic and the mean failure rates are the same as those given in Table 13 for the non-redundant case.

The failure probabilities for the original design of the static inverter based upon the stated assumptions is approximately as given in Table 14.

Table 14

Failure Rate Analysis - Static Inverter Original Version (With Redundancy)

Expected No. of Failures, $m_e (\times 10^6)$

$m_{e,j}$

Mission Phase

Element No.	1	2	3	m_e Complete Mission
21	0.625×10^{-9}	0.39×10^{-2}	0.032	0.034
{16, 17, 22, 23 in parallel with}	0.196×10^{-5}	0.116	0.964	1.080
32,33	0.08	0.130	0.374	0.584
34 (35, ..., 45)	1.92×10^{-8}	0.506×10^{-3}	0.418×10^{-2}	0.468×10^{-2}
46 (47,48,49,50,51)	2.22	578.1	1664.2	2244.5
52 (53,54,55,56,57)	6.72	1968.0	5665.1	7639.8
58	0.06	3.2	9.0	12.3
59	0.66	172.8	497.2	670.7
60	0.83	216.7	623.6	841.1
61	0.18	51.3	147.8	199.3
62	0.41	102.9	296.0	399.3
63	0.68	195.5	562.8	759.0
64	0.71	195.9	563.8	760.4
Static Inverter (m_{SI})	12.55	3484.6	10,030.9	13,528.5

The inclusion of redundancy has increased the reliability from 0.9857 to 0.9865. The increase is certainly insignificant in terms of the precision of the failure rates used in the analysis.

Modified Version (With Redundancy)

The logic diagram for the modified version is shown by the lower diagram in Figure 15. The M designation following an element number denotes the modification. The modifications are described in detail in Vol. II. Note that two modified six-volt regulated supplies (elements 21M-1 and 21M-2) are employed in the redundant paths of the timing section. The expected number of failures for these are the same as computed earlier for element 21M-1 in the original version without redundancy. The electronic switches are modified to switch a higher voltage but the same part types and configurations are used so that the expected number of failures is unchanged. All diodes are eliminated from each of the coupling circuits and replaced with two resistors. These are of types formerly employed in the timing pulse amplifier which are each modified (along with element 62) to eliminate two resistors. All other elements in the inverter are unmodified.

The failure probabilities for the various circuit elements are listed in Table 15. The reliability computed as described earlier for this version of the inverter circuit is 0.9861 which lies midway between the values computed for the other two versions.

Table 15

Failure Rate Analysis - Static Inverter Modified Version (With Redundancy)

Expected No. of Failures, $m_e (\times 10^6)$

Element No.			$m_{e,i}$ Mission Phase 1	2	3	m_e Complete Mission
16 {21M-1} 22	in parallel with	17 {21M-2} 23	0.2×10^{-5}	0.138	1.143	1.281
32M-45M			0.84	170.6	490.0	660.6
46M-51M			1.86	504.9	1454.2	1961.0
52-57			6.72	1968.0	5665.1	7639.8
58			0.06	3.2	9.0	12.2
59			0.66	172.8	497.2	670.6
60			0.83	216.7	623.6	841.0
61			0.18	51.3	147.8	199.3
62M			0.35	90.7	261.0	352.1
63			0.68	195.5	562.8	758.8
64			0.71	195.9	563.8	760.4
Static Inverter (M_{SI})			12.9	3569.8	10,275.5	13,855.3

Remarks:

Many assumptions have been made in this analysis which are subject to comment. No attempt is made here to support or to reject the assumptions but only to indicate them. Some general remarks are given below:

1. The precisions associated with the estimated failure rates are usually quite poor and consequently the estimated probability of a successful mission for the static inverter is subject to considerable error. However, if one is comparing the different designs using the same components, the decision to use one design in preference to the other may be robust with respect to the estimated failure rates and the lack of precision associated with them.

2. If the failure rates are estimated by collecting life test data on a component under different environments, for different lengths of tests, and for different failure modes, and other possible differences, it is clear that the estimates are subject to wide interpretation.

3. In the above analysis it was assumed that failure of a component implies failure of the system. If, however, a failure rate is partially determined on the basis of drift out of tolerance or degradation, for example, the change in resistance exceeding a given percent of the nominal value; a failure in this mode would not necessarily imply SI failure. If the hazard rate is not constant the estimated failure rates will very likely be biased.

4. If a reliability prediction analysis is to be coupled with a performance variation analysis, it would be pessimistic to use failure rates based on several failure modes including drift, opening, shorting, noise, etc.

5. In performing a standard failure rate analysis it is recognized that a failure mode and effects analysis (FMEA) would be more meaningful. Such an analysis would require further information - failure rates for each mode - in order to make a complete numerical analysis.

6. It is emphasized again that failure of some of the components or elements will not necessarily result in SI failure, but will result only in a degraded mode of operation (failure only in that the performance requirements are not met).

7. The effect of redundancy in all cases is to yield a probability of essentially unity for successful operation by at least one path within an element or within the SI. This result is clearly dependent on the assumption that the independence of the operation applies; that is, knowing that one element in one path has failed does not alter the odds that an element in another path will fail.

8. In view of the many simplifying assumptions required and the precision of the data, it is concluded that the small differences among the computed success probabilities are alone not adequate to make design decisions for the best configuration. The results are meaningful only when considered jointly with those of performance consideration, failure modes and effects analyses and component stress analyses. This is demonstrated in Vol. II of this report in which the modified version of the inverter circuit is recommended as the preferred version even though its estimated success probability is slightly less than the original version with redundancy.

4.2.1.3 Continuous Markov Process

Another method of deriving conventional reliability models is to use the approach of a first order Markov process and difference equations. Sandler (1963), is mainly devoted to the derivation of models based on this approach. A space-state diagram relates the possible transitions between the possible system states. The postulate is applied: the probability of a state change during (t, t+dt) is tdt plus terms of smaller order than dt and the probability that more than one change occurs is smaller than dt. This approach leads to a set of linear homogeneous differential equations, which can be solved for the probability of success as a continuous function of time. Different system configurations (series, active-parallel, and standby-parallel) lead to different success probability functions, which are identical to those obtained from the approach in the preceding section on exponential life. The Markov process approach can be readily extended to include maintenance, which is really the advantage of this type of model formulation. Here the state-space transition diagram is expanded from only failure transitions to include both failure and repair transitions. The same postulate can be applied to repair as was applied to failure, resulting in an expanded set of differential equations. These can be solved for availability formulas. This Markov process formulation is thus best suited for system level modeling where both maintainability and reliability are to be explicitly considered, but where the operational profile and the system are not so complex that an analytical approach becomes unwieldy.

4.2.2 General Two-State

Techniques which are more general than the conventional techniques of Section 4.2.1 have been available but have not been as widely applied as the conventional approaches. Some of the more general techniques are based on moderate changes in the assumptions or on approaches which lead to relatively straight-forward results. These techniques are of primary interest, as they are potentially suitable for realistic applications. Other two-state techniques which involve considerable analytical complexities are of secondary interest. The analytical techniques which are discussed below are related to time distributions, and no further remarks are made on analytical formulations of discrete or continuous time Markov processes in addition to those in the conventional techniques. Theory exists for more general processes as discussed in Sandler (1963;p31). However, these have not been typically applied to reliability problems. The more general approaches discussed below are more suitable for practical applications.

4.2.2.1 Continuous Time Distributions

A relatively simple approach to a more general treatment is to use non-exponential distributions for the reliability of lower level items. This is analytically straight-forward for the time-to-first-failure, e.g. for satellites where repair is not feasible. However, when repair and the time to second, third, etc., failures are considered this will become analytically complex because the reliability and repair distributions for various items may have different shapes and parameters. Even when repair is not considered but the system and the operational profile are complex, then an analytical approach using non-exponential lifetime distributions may be unwieldy. In such cases the approximation or simulation techniques which are discussed in the following two sections may be suitable. The analytical treatment of general time distributions is best restricted to simplified situations as the time-to-first-failure.

4.2.2.2 Time Distribution Moments

Analytical approaches suitable for realistic applications to continuously operating systems can be developed without using complete descriptions of the failure or repair time distribution. In a recent development of such a technique only the means of the distributions were used, and no assumptions were made concerning the forms of the distributions, DeSieno (1965). Formulas were developed for steady-state availability, and the mean deviation of system up-times and down-times. This approximation results in the restriction of the applicability of the formulas to steady-state conditions. The main applicability here is at the system level where maintenance is feasible and the interest is not solely reliability. This approach is a rather recent development from a reliability applications viewpoint.

4.2.2.3 Simulation

The most flexible technique for treating general failure and repair time distributions of complex systems and operational profiles is simulation (Monte Carlo), for example, see Hershkowitz, Wheelock, and Maher (1964). Logic diagrams are used to define the combinations of components required to complete the necessary functions. Each failure and repair time distribution is sampled and a determination is made as to whether or not the function is successfully completed. Success or failures of subsystem components may also be simulated by generating random uniform numbers on the interval (0.1) with the interval (0,p), $p < 1$ as the interval for the probability of success. Trials are repeated for

desired confidence, and the outputs as reliability of sensitivity are obtained in an experimental sense from the relative frequency with which pertinent events occur. This approach has a quick reaction to changes in system configuration. The large amount of computer time for a complex analysis with high confidence is the primary disadvantage.

4.2.3 N-State

The notion of items which at the lowest level are considered to have more than the two states was introduced previously in Section 4.0. Another realistic example, in addition to the catastrophic modes of a failure of open or short, is the consideration of whether a digital circuit used in a computer remains failed in either the 0 or 1 mode. For such applications redundant approaches may or may not improve the system reliability. Consideration of the form of the failure mode develops a viewpoint which is potentially more useful than the two-state approaches from the detail design engineering viewpoint. However, the N-state approach has not received nearly the attention in reliability analysis applications as have the two-state approaches. Extending any of the conventional or general two-state analysis techniques which are applications oriented is a straight-forward step. This extension adds additional inputs into the analysis, but the basic concept and general analysis procedure remains the same. Extension of the conventional techniques has been applied by Rhodes (1964), Van Tijn (1964), and Sandler (1963), and the theoretical reliability developments have been considered by Zelen (1965) and Levy (1962). An example of an N-state analysis is given in Parker and Thompson (1966).

4.3 Outputs and Uses

The output of such analyses are reliability predictions (indices) for successful operation of the equipment for the duration of the mission. One can also obtain sensitivity measures of particular parts of an equipment or of equipments of a system. Furthermore, the comparison of the various design configurations can be made to indicate the preferred design based on life considerations. Such information must be combined with performance and stress analysis efforts as described in Section 2 in order to make a final decision. The reliability indices may be used in trade-off and optimization analyses. For example, Susaki (1963), applies the dynamic programming algorithm to obtaining optimum design configurations.

5.0 Combination of Past and Present Results

Referring to Figure 1 in Section 2.0 it is indicated that experience with similar equipment is valuable in the analysis of proposed new equipment designs. Two ways by which this can be accomplished are described in this section.

The first approach is to use a model reliability growth as the equipment design evolves from early models to advanced designs. For example, it may be assumed that the equipment reliability is at least as good new as that of all previous designs. Another approach is to assume that reliability increases according to a given functional relationship between reliability and the number of designs or number of equipments that have been produced. See Barlow and Scheuer (1965) for a discussion of such techniques.

Another approach is to use Bayesian decision models which use past experience to postulate prior distributions of the parameters under consideration. For example, the true failure rate may be assumed to have a probability density function, $p_0(\lambda)$, with a mean given by that observed for similar equipment. There is also an empirical Bayesian technique which uses the prior information to estimate the density function directly with observed relative frequencies and without assuming an a priori density function. See Press (1965) for a discussion of this procedure. The empirical Bayesian technique is not discussed in this section as its use requires large samples.

In order to compare the techniques of using prior experience with standard techniques which use no prior information, a simple example will be employed.

Suppose that ten (10) equipments have been constructed and tested for T_0 hours and that no failures have occurred. Furthermore, assume that at several stages in the design cycle 20 similar equipments have been tested under the appropriate environmental conditions and that one (1) item failed. What is the reliability of the equipment?

First Solution: Use only the most recent test results on the equipment to be used.

The estimated relative frequency of success is 1 and a 95% lower confidence interval limit is 0.741. This lower limit $\underline{\theta}$ can be obtained by using the formula given in Hald (1952, page 698).

$$\underline{\theta} = \frac{x_0}{x_0 + (n-x_0+1)\, v_{P_2}^2} = 0.741$$

where

$f_1 = 2(n-x_0+1)$,
$f_2 = 2x_0$,
x_0 = number of successes observed,
n_2 = number of trials made, and
v_{P_2} = the tabulated value of the variance ratio for which the probability is P_2 of not exceeding, for f_1 and f_2 degrees of freedom.

Second Solution: Use the reliability growth technique which assumes that the reliability at the last stage is no worse than it was at any previous stage.

In this case all 30 items can be treated as though they were from the same batch of items and the resulting conservative confidence interval estimate is given by the same procedure as above (1st solution) with one (1) failure and n = 30 items tested. Hence the lower limit is given by 0.850. This limit is conservative in the sense that the confidence is at least as large as 95%.

Third Method of Solution: Using Bayesian method.

In this case assume that the prior density function is given by the beta function,

$$p_0\{R\} = \frac{1}{B(i,j)} R^{i-1} (1-R)^{j-1},$$

where i and j are positive integers and may be chosen to be consistent with the prior information. From previous tests it is known that the estimated reliability is

$$R = 19/20 = 0.95.$$

The above distribution has a mean

$$\mu\{R\} = \int_0^1 R \frac{1}{B(i,j)} R^{i-1} (1-R)^{j-1}\, dR$$

$$= i/(j+i) = 0.95 \text{ say}$$

where

$$B(i,j) = \frac{\Gamma(i)\Gamma(j)}{\Gamma(i+j)} = \frac{(i-1)!\,(j-1)!}{(i+j-1)!}.$$

Assume i = 19, j = 1 then the prior density function is

$$p\{R\} = \frac{1}{B(19,1)} R^{18} (1-R)^{0} ,$$

The a posteriori density function of R given r observed successes in n trials is given by

$$p\{R|r\} = p\{R\}\, p\{r|R\} / \int p\{R\}\, p\{r|R\} dR$$

$$= \frac{R^{18+r}(1-R)^{n-r}}{B(18+r+1,\ n-r+1)} .$$

The mean of the a posteriori distribution is

$$\hat{\mu}_B = \frac{r + 19}{n + 20} ,$$

which is the Bayes estimate of the reliability. Now in the example r = 10, n = 10, and hence

$$\hat{\mu}_B = \frac{29}{30} = 0.9667$$

A lower 95% confidence interval estimate of the reliability can be obtained using the Bayesian technique given in Breipohl, Prairie, and Zimmer (1965) and it is 0.902.

The results of the three solutions indicate that reliability growth and Bayesian approaches yield shorter confidence interval estimates as a result of having assumed more information. But it is necessary to assume prior information or some other relationship among the reliabilities at the various stages. However, the previous test experience should be used to the extent that it is reasonable. For better use of prior information it would be desirable to define criteria for deciding when to use test results from similar equipment. One would also be interested in how dependent the a posteriori estimates are on the a priori assumptions. See Breipohl, Prairie, and Zimmer (1965) with respect to this question.

For a second example, suppose that tests have been made on a new transistor and that 0 failures have been observed in 10^5 hours. Assume that 5 failures were observed in 10^6 hours. Furthermore, assume the hazard rate is constant. Estimate the failure rate and obtain the a posteriori distribution assuming an a priori gamma distribution

$$f(\lambda) = \frac{t_0^{r_0} e^{-\lambda t} \lambda^{r_0-1}}{\Gamma(r_0)} .$$

A 100γ percent confidence interval estimate of λ may be obtained by

$$P\{\lambda_L \leq \lambda \leq \lambda_U\} = \int_{\lambda_L}^{\lambda_U} f_1(\lambda)\, d\lambda = \gamma.$$

Consider the problem of obtaining a 100 percent one-sided confidence interval estimate. In this case let the lower limit be zero and the upper limit be determined by the solution of λ_U in the equation,

$$\int_0^{\lambda_U} f_1(\lambda) d\lambda = \gamma \ .$$

It can be shown that the above equation can be expressed in terms of the χ^2 distribution as

$$P\{\chi^2 \leq 2\lambda_U (t+t_0)\} = \gamma$$

where χ^2 has a χ^2 distribution with $2(r_0+y)$ degrees of freedom. Hence for $r_0 = 5$, $t_0 = 10^5$, $t_0 = 10^6$, $y = 0$ one obtains

$$\chi^2_\gamma = 2\lambda_U(t+t_0)$$

or

$$\lambda_U = \frac{\chi^2_\gamma}{2(t+t_0)} = \frac{11.1}{2(1.1\times 10^6)}$$

$$= 5.045\times 10^{-6}.$$

The choice of the prior distributions is primarily for mathematical convenience. However, there is considerable freedom in the choice and depending upon the quality of the prior information one can select a distribution with a large or small variance. See Breipohl, et. al. (1965), with respect to further discussion pertaining to this problem. One should also refer to Howard (1965) for an application of Bayesian decision models to a problem which considers the desirability of accepting a fixed price contract to build and maintain a system of N devices for a period of T years. In addition, a problem is posed for selecting the size of an experiment (number of devices to place on test) for obtaining profit larger than zero, subject to the prior information about the failure rate λ.

The mean and variance of λ having the above distribution are

$$E\{\lambda\} = r_0/t_0$$

$$\text{Var}\{\lambda\} = r_0/t_0^2 = E\{\lambda\}/t_0$$

Solution:

The a posteriori distribution of λ given y failures in t hours is

$$f_1(\lambda|y) = \frac{f_0(\lambda)\, e^{-\lambda t}(\lambda t)^y/y!}{\int_0^\infty [\frac{t_0^{r_0}}{\Gamma(r_0)} e^{-\lambda t_0} \lambda^{r_0-1} \frac{1}{y!} e^{-\lambda t} (\lambda t)^y] d\lambda} .$$

Hence

$$f_1(\lambda|y) = \frac{f_0(\lambda) e^{-\lambda t} (\lambda t)^y/y!}{D} .$$

where

$$D = \frac{t_0^{r_0} t^y \Gamma(r_0+y)}{(r_0)y!\ (t+t_0)^{r_0+y}} .$$

Thus

$$f_1(\lambda|y) = \frac{e^{-\lambda(t+t_0)} \lambda^{r_0+y-1} (t+t_0)^{r_0+y}}{\Gamma(r_0+y)} .$$

For the example, let $t_0 = 10^6$ hours and $r_0 = 5$, to correspond to the observed number of failures in 10^6 hours of testing, then

$$f_1(\lambda) = \frac{e^{-\lambda(t+t_0)} [\lambda(t+t_0)]^{r_0+y-1} (t+t_0)}{\Gamma(r_0+y)} , \text{ with } r_0 = 5,\ t_0 = 10^6,$$

and where y is the observed number of failures in the life test on the new transistor.

The mean of the a posteriori distribution is the Bayes estimate,

$$\hat{\lambda}_1 = \frac{r_0+y}{t+t_0} = \frac{5+0}{1.1\times 10} = 4.54\ 10^{-6} .$$

This compares with the prior estimate of

$$\hat{\lambda}_0 = 5\times 10^{-6} .$$

6.0 Conclusions and Recommendations

The major tasks of reliability analysis during the equipment design stage are failure modes and effects analyses, performance variation analyses, component stress analyses, and reliability prediction. Their implementation draws from two basic types of analytical techniques; performance variability and reliability-life. Through the efforts of this study, the need for closely coordinating the four tasks has become apparent. Their interrelationship was described in Section 2.0. Specific conclusions with regard to this study are as follows:

(1) Failure modes and effects analyses are of significant value in directing other efforts. It defines modes of behavior for performance variation studies, it emphasizes critical areas for stress analysis, it designates failed states to be included in reliability prediction, and it assists in test planning. It is recommended to NASA that failure modes and effects analyses be implemented early in equipment design.

(2) Whereas reliability prediction, failure modes and effects analyses, and component stress analyses are formally recognized as basic elements of space system contractor program plans for reliability, the performance variation analyses task has thus been neglected (c.f., NASA Reliability Publication NPC 250-1). This has been due to the lack of understanding of available performance variability techniques and their relationship to reliability. With appropriate dissemination of the analysis procedures assembled under this effort, performance variation analyses can be relegated to equivalent status with the other tasks with a beneficial effect on equipment performance. The application of performance variability techniques is similar to the normal work of the design engineer, as both use models as a starting point. In all likelihood, organized performance variation analysis procedures will be welcomed by the design engineer.

(3) The limitations on the type, quality, amount, and accessibility of data continue to limit the effectiveness of the designer. Immediate clear-cut solutions are not available; however, improvements continue to evolve and should be encouraged. In parts application, the problems are typified by the designer who needs, or believes he needs, much more information than most suppliers are normally willing or able to provide. In component stress analyses, examples occur frequently where common application factors are not specified or are vaguely referenced. A lack of knowledge of component parameter variations seriously limits performance variation analyses. Reliability predictions also have little significance in representing actual mission success probabilities because of the imprecision of the data.

The need for improved coordination of data collection, reduction and dissemination among the various NASA organizations and space system contractors is apparent. A solution may be a central NASA data facility. It is desirable to consider the feasibility, the ultimate value, and the explicit role of such a facility. In addition to components data, there is merit in including other relevant information such as system and equipment performance data, specifications, (for all hardware levels) space environment descriptions, mission profiles, and field operational data.

(4) With reliability prediction placed in perspective with other analysis efforts, the need for explicitly stating assumptions with numerical results has become more apparent than ever. An analytical framework is available for performing improved predictions and for including performance degradation (i.e., drift) failures, as improvements in failure and performance data evolve. Even though reliability prediction is more familiar than the other tasks, a need still exists for more dissemination of other techniques.

(5) Computational requirements will continue to increase, particularly with added sophistication in analyses. A solution is automation. Pre-programmed computer routines reduce manual requirements while offering a distinct advantage in the objectivity of the analyses. The computer program developed in this effort and described in Appendix A allows needed flexibility for performing different types

analyses. The CRAM program offers definite improvements over conventional procedures. Network analysis programs such as NET-1 and ECAP reduce the effort required in modeling and analyzing circuits. More emphasis is needed in extending such programs to include performance variability and for analyzing for effects of component failure modes.

To motivate design engineers in using computer techniques, descriptions of the available automated facilities are needed, not only of the required inputs and the available outputs, but also of the inherent assumptions and models included in the programs.

(6) Testing during the design stage is a beneficial effort for the reliability analysis, if it is properly planned and coordinated with the analysis tasks. Modeling concepts that form the basis for reliability analyses also can be used in directing more efficient testing through serving to eliminate some of the ad hoc and inefficient effort that prevails.

The value of circuit breadboard testing in direct support of failure modes and effects analysis and performance variations analyses has been demonstrated. Experimental models are most realistic. Tests can be designed for supporting empirical modeling which yield appropriate data for describing performance.

With improved approaches, parts qualification testing can be made more efficient while providing data in direct support of stress analyses and performance variation studies. A testing approach that is coordinated with the analysis tasks can well serve to promote NASA's concept of integrated testing.

(7) This methodology recognizes that the responsibility for reliability cannot be delegated to reliability specialists. Reliability is a product of all personnel involved. Translation of reliability concepts and procedures to a practical level for wider dissemination will have benefits in educating, encouraging and motivating engineers to assume their appropriate responsibilities for the design, development, and fabrication of reliable systems. A series of monographs on related reliability topics can serve to compile the methodology into a

form compatable with this need. It is recommended that topic areas pertaining to design stage analyses be presented initially since the potential benefit for improved practices is probably greatest for this stage of development. Some suggested topic areas which should be covered in such a series are

a) performance variation analyses,
b) reliability prediction,
c) parts application with emphasis on data requirements for stress analyses and performance variability studies,
d) testing, its design, and use of its results,
e) computational techniques,
f) failure modes and effects analyses,
g) human factors,
h) costs and incentive contracting,
i) effectiveness analysis procedures,
j) failure mechanisms, and
k) Bayesian techniques.

Others could be included but these serve to illustrate the extent of coverage which is needed.

(8) Experience in this effort has provided further evidence that a sound methodology for reliability analysis is evolving. Attention in this effort was focused primarily on design stage analyses. A complete methodology consists of defining and coordinating the tasks and relevant analysis techniques throughout the product cycle from initial conception to operational employment of the end product. Even though this may appear formidable, appropriate effort toward its fruition will, without question, produce positive results.

Remaining conclusions apply specifically to the techniques discussed in Sections 3.0, 4.0, and 5.0 and are presented under the appropriate heading. Since performance variability techniques were emphasized, these conclusions are presented in greater detail.

Performance Variability Techniques

The techniques which are applicable now are not very complex. Those currently receiving major attention are (1) end-limit techniques (worst-case and sensitivity), (2) moments method, and (3) simulation. Some comparative evaluation information for these is presented in Table 16. Technique selection depends on the nature of the inputs, i.e. the available models and data, the availability of resources such as manpower and computer facilities, and the type of output information desired.

If physical models are available, an empirical approach may be preferable, particularly so if the equipment is very complex causing excessive costs in an analytical approach. The experimental data can be used for direct performance assessment or obtaining a mathematical model via regression. On the other hand, an analytical modeling approach will usually have greater value in providing a better understanding of the equipment, particularly if it is coordinated with physical modeling. For many equipments, electronic circuits in particular, it may be possible to do all or part of the analysis by use of an appropriate computer routine such as the NET-1 network analysis program. The computer routine does not provide a performance model directly since the analytical model is inherent in the program instructions. The results can be used, however, to obtain a model through regression, just as one obtains an empirical model from a physical model by simulating variations in part and interface charactersitics.

The selection of the analysis technique is influenced strongly by the available data. If nominal and worst-case values of the part and input characteristics are available, it is recommended that an end-limit analysis of the form described in Section 3 (providing identification of important variation sources, sensitivity measures, checks for linearity, etc.) be performed because of the usefulness of its outputs and the ease with which the analysis can be performed.

If the moments (mean and variance or standard deviation) of the part and interface characteristics are available, it is recommended that the moments method be used simultaneously with the end-limit analysis since this moments method requires little additional effort.

Table 16

Technique Evaluation Information Summary

I. END-LIMIT

Major Assumptions	Remarks
Probability 0 that input variables will fall outside worst case limits	Correlation is not Considered
Model represents functional relationship	Normally an approximation with no error term
Outputs	
Performance worst-case limits	Overly conservative; no reliability index
Important variation sources	Interactions and non-linear terms are often ignored
Sensitivity measures Checks of linearity Regions of successful performance	No reliability index
Resources	
Inputs	Available with moderate effort
Computer	Straightforward
Manpower	Straightforward to apply

II. MOMENTS METHOD

Major Assumptions	Remarks
Sufficient moments used	Correlation and higher moments often ignored
Model represents functional relationship	Normally an approximation with no error term
Outputs	
Moments of performance variations	Can obtain correlations
Important sources of variation	Interactions and non-linear terms often ignored
Reliability index	Distribution tails inaccurate, excludes catastrophic failures

Table 16 (Cont'd)

Resources

Inputs	Difficult to obtain moments accurately
Computer	Straightforward
Manpower	Requires some probability background

III. SIMULATION

Major Assumptions	Remarks
Input variation described by distribution	Correlation often ignored
Model represents functional relationship	Normally an approximation with no error term
Sufficient simulation trials are taken	

Outputs

Distribution of performance variations	An approximation
Important sources of variation causes	Need additional computation
Reliability index	Distribution tails inaccurate, excludes catastrophic failures

Resources

Distribution	Difficult to estimate input distributions accurately
Computer	Requires large number of trials for desired precision
Manpower	Straightforward to apply

If distribution data are available, it is recommended that the end-limit (if applicable) and moment methods be applied first. The worst-case limits of the performance attributes may, themselves, have little utility; however, other outputs of the analysis (checks for linearity and interaction) validate the assumptions required for performing either a simplified analytical analysis or a simulation analysis. For example, if the performance is sensitive to only a single variable then a distribution of the performance is readily obtained to a high degree of precision. If only one variable has a non-linear effect on performance, a simplified mathematical model can be obtained for which the computation can be easily performed.

Similar recommendations apply to cases in which data are available at fixed or discrete times in the life of the equipment. If the interface part characteristics are described in terms of either time-varying distribution or stochastic processes, then an experimental or analytical approach may be used depending on knowledge of the transfer function and the simplicity of its form.

These recommendations for technique selection recognize the current limitations on data. Performance data discrepancies have been discussed. The simpler techniques require a minimum of data, no more than a design engineer would require for a standard design analysis. It has even been demonstrated, (e.g., in Vol. II) that sound design decisions can be made with the techniques using reasonable assumptions for part variability. For achieving more precision and for developing the capability for treating more difficult design problems, improvements in data are a necessity.

Specific conclusions with respect to further technique development are as follows:

(1) Further consideration should be given to the development of automated performance variation procedures to supplement the design engineer's analysis of an equipment.

(2) Emphasis should be on techniques suitable for applications, often implying the use of approximations and computers.

(3) Further applications of random process techniques are desirable. Their use can improve the information obtainable from experimental data recorded continuously over time.

(4) Optimization techniques which maximize reliability are needed, e.g. simultaneous consideration of performance variations, safety margins, and catastrophic failure modes.

Reliability-Life Techniques

Reliability-life techniques are generally more familiar to the design engineer. They have been applied in reliability prediction almost entirely in the conventional form of analysis as described in Section 4. The following conclusions are made with respect to this effort.

(1) The assumptions of independence that are made very frequently for redundant paths (elements or parts) should be examined critically. Very often parts in parallel are subject to failure under the same high stresses and, consequently, the assumption of statistical independence does not apply.

(2) More emphasis should be placed on testing breadboard models both in the failed modes of critical components and under certain environmental conditions when the effect on the performance is not known. These tests can be planned on the basis of outputs of Failure Modes and Effects Analyses discussed in Section 2.0.

(3) There is a need for a single source of space system component failure data for ready accessibility in reliability prediction analyses. Dissemination in handbook form with periodic updating is preferable. Responsibility for collection , reduction, and dissemination should be concentrated in one central facility as discussed earlier.

(4) Reduction of data on failure rate indices should be performed by equating mean failure rates for similar components. For example, mean failure rates may be so nearly identical for similar components that extremely large samples of components on test would be required to differentiate between such failure rates. This approach would aid in developing realistic Bayesian models.

(5) Tests should be made concerning the assumption of constant hazard rate. Some methods are given in Proschan (1963) and Doyon (1966). Cases in which extensive data are available should be used.

Combination of Past and Present Results

The use of Bayesian and reliability growth models should be encouraged as these approaches provide the primary means for including past experience and available information. Such models can absorb information from data centers on both equipments and parts. From this information realistic models for growth and for Bayesian approaches may be formulated.

7.0 References and Bibliography

Section 2 - Design Reliability Analysis Concepts

Britt, C. L. (1965). Research in the functional analysis of systems. Annual Technical Conference Transactions, American Society for Quality Control.

Connor, W. S. and Krohn, C. A. (1964). Analytical contributions to system reliability. Western Regional Quality Control Conferences, Portland, Oregon. 209-218.

Hausrath, D. A. and Ranalli, R. (1966). Computer studies of abnormally operating circuits, Annual Symposium on Reliability, San Francisco, California, p. 66-86,

Parker, C. D. and Thompson, W. S. (1966). Reliability analysis of timing channel circuits in a static inverter, Technical Report No. 6, under Contract NASw-905.

Suran, J. J. (1961). Effect of circuit design on system reliability, IRE Transactions on Reliability and Quality Control, Vol. RQC-10, No. 1.

Thompson, W. S. and Krohn, C. A. (1964). Application of a basic systems-reliability model. Tenth National Symposium on Reliability and Quality Control.

Section 3 - Performance Variability Techniques

End-Limit (Sensitivity and Worst-Case)

Addelman, S. (1963). Techniques for constructing fractional replicate plans, Journal of the American Statistical Association, 58, 45-71.

Oliveto, F. E. (1964). Dual-phased failure mode evaluation. Proceedings, Tenth National Symposium on Reliability and Quality Control, Washington, D. C. 434-448.

Tommerdahl, J. B. and Nelson, A. C. (1963). Study of failure rate distributions of series-parallel configurations, Final Report under Contract No. DA36-039-SC-90822, AD-418608.

West, W. J. and Scheffler, H. S. (1961). Design considerations for reliable electronic equipment. Northeast Research and Engineering Meeting, Boston, Mass.

Fixed-Time Distributions

Davenport, Jr., W. B. and Root, W. L. (1958). An Introduction to the Theory of Random Signals and Noise, McGraw Hill, Chapter 8.

Draper, O. L. (1961). Semi-invariant method of statistical design. (unpublished paper) General Electric Company, Pittsfield, Mass.

Feller, W. (1950). An Introduction to Probability Theory and Its Applications, Vol. 1, 2nd Edition, John Wiley and Sons, Inc., New York, N. Y.

Gray, Jr., H. J. (1959). An application of piecewise approximations to reliability and statistical design. Proceedings IRE 47, No. 7.

Heck, D. L. and Tung, L. H. Distributions of functions of random variables. (unpublished paper) International Business Machines Corp., Endicott, N. Y.

Hinrichs, R. H. (1956). A second statistical method for analyzing the performance variation of electronic circuits. Convair (Astronautics) Division, General Dynamics Corporation, Report ZX-7-010, ASTIA AD 218 757.

Larson, D. M. and Grinnell, B. J. (1961). A comparison of methods of drift reliability determination. Proceedings, Seventh National Symposium on Reliability and Quality Control, Philadelphia, Pa.

Marini, J., Brown, H., and Williams, R. (1958). Evaluation and prediction of circuit performance by statistical techniques. Aeronautical Radio, Inc., Monograph No. 5, Publication No. 113.

Parzen, E. (1960). Modern Probability Theory and Its Applications. John Wiley and Sons, Inc., New York, N. Y.

Reza, F. M. (1964). On the probabilistic circuit theory. Air Force Contract AF30(602)-3252, RADC-TDR-64-180, ASTIA 603249, 23-80.

Shooman, M. L. (1965). Mathematical models for drift failure analysis. Proceedings, Eleventh National Symposium on Reliability and Quality Control, 558-562.

Sylvania Electronic Systems - East, Waltham, Mass., (1963). Transfer functions in mathematical simulation for reliability prediction, Final Report. Air Force Contract AF 30(602) - 2376, RADC-TDR-63-87, ASTIA AD 402154.

Time-Varying Distributions

Parzen, E. (1960). Modern Probability Theory and Its Applications. John Wiley and Sons, Inc., New York, N. Y.

Random Processes

Brender, D. M. and Tainiter, M. (1961). A Markovian model for predicting the reliability of an electronic circuit from data on component drift and failure. IRE International Convention Record.

Cramér, H. (1962). On the maximum of a normal stationary stochastic process. Bulletin of the American Mathematical Society, 68, No. 5.

Cramér, H. and Leadbetter, M. R. (1966), Stationary and Related Processes, to be published by John Wiley and Sons, Inc., New York, N. Y.

Leadbetter, M. R. (1963). On the normal stationary process -- areas outside given levels. Journal of the Royal Statistical Society, 25, No. 1.

Leadbetter, M. R. (1965). On crossings of arbitrary curves by certain gaussian processes. Proceedings, The American Mathematical Society, 16, No. 1, 60-68.

Leadbetter, M. R. and Cryer, J. D. (1965). On the mean number of curve crossings by non-stationary normal processes. The Annals of Mathematical Statistics, 36, No. 2.

Tainiter, M. (1963). An application of a Markovian model to the prediction of the reliability of electronic circuits. IEEE Transactions on Reliability, R-12, No. 4.

Tainiter, M. (1963). Estimation, hypothesis testing and parameter correlation for Markov chains. IEEE Transactions on Reliability, R-12, No. 4.

Outputs and Uses

Becker, P. W. and Warr, R. E. (1963). Reliability vs component tolerances in microelectronic circuits. Proceedings of the IEEE, Vol. 51, No. 9.

Jelinek, H. J. and Frola, F. R. (1964). Achieving circuit reliability with linear programming. Proceedings, Tenth National Symposium on Reliability and Quality Control, Washington, D. C. 525-537.

Section 4 - Reliability-Life Techniques

Conventional

Earles, D. R. (1960a). Component part failure rates associated with installation environment, The Martin Co., Denver, Colorado, M-60-47.

Earles, D. R. (1960b). Reliability application and analysis guide, The Martin Co., Denver, Colorado.

Feller, W. (1950). An Introduction to Probability Theory and Its Applications, Vol. 1, 2nd Edition, John Wiley and Sons, Inc., New York, N. Y.

Lloyd, D. K. and Lipow, M. (1962). Reliability: Management, Methods, and Mathematics. Prentice-Hall, Inc.

Madison, R. L., Gottfried, P., and Herd, G. R. (1963). Reliability variation analysis for space system development. Booz-Allen Applied Research, Inc., NASA - ORQA, Contract NASw-643.

Merit Index of Proven Parts and Sources (1964). Astro Reliability Corporation, 1.

Mil-Hdbk-217 (1962). Reliability Stress and Failure Rate Data for Electronic Equipment, Department of Defense.

Muller, F. W. (1964). Elementary reliability technology (Monograph) Sandia Corp., Albuquerque, New Mexico.

Rome-Air Development Center, USAF (1961). RADC Reliability Notebook, RADC-TR-58-111, (revised), Section 4.

Ryerson, C. M. (1965). Correlation of ground, air, and space failure rates. Proceedings, Eleventh National Symposium on Reliability and Quality Control. 273-278.

Sandler, G. H. (1963). System Reliability Engineering. Prentice-Hall, Inc., Englewood Cliffs, New Jersey.

Von Alven, W. H., Editor (1964). Reliability Engineering. Prentice-Hall, Inc., Englewood Cliffs, New Jersey.

General Two-State

Applebaum, S. P. (1965). Steady-state reliability of systems of mutually independent subsystems. IEEE Transactions on Reliability, R-14 23-29.

Aroian, L. A. and Myers, R. H. (1961). Redundancy considerations in space and satellite systems. Proceedings, Seventh National Symposium on Reliability and Quality Control, Philadelphia, Pa., 292-301.

DeSieno, C. F. (1965). A probability method for determining the reliability of electric power systems, IEEE Transactions on Reliability, Vol. R-14, 30-35.

Hershkowitz, B. H., Wheelock, M. E. and Maher, D. P. (1964). Reliability simulation model. Proceedings, Tenth National Symposium on Reliability and Quality Control, Washington, D. C. 186-199.

Jagodzinski, N. (1963). Dynamic reliability instantaneous forecasting technique. Proceedings, Fourth Annual New York Conference on Electronic Reliability, 7-2 -- 7-16.

N. State

Levy, S. (1962). The reliability of recursive triangular switching networks built of rectifier gates, Redundancy Techniques for Computing Systems, edited by Wilcox, R. H. and Mann, W. C., Spartan Books, Washington, D. C.

Rhodes, L. J. (1964). Effects of failure modes on redundancy. Proceedings, Tenth National Symposium on Reliability and Quality Control, Washington, D. C. 360-363.

Van Tijn, D. E. (1964). Description of the computerized reliability analysis method (CRAM). ARINC Research Monograph 11, Publication 294-02-14-444.

Zelen, M. (1963). Statistical Theory of Reliability, The University of Wisconsin Press, Madison, Wisconsin.

Outputs and Uses

Susaki, M. (1963). An easy allotment method achieving maximum system reliability. Ninth National Symposium on Reliability and Quality Control, San Francisco, California, 109-124.

Section 5 - Combination of Past and Present Results

Barlow, R. E. and Scheuer, E. M. (1965). Reliability growth during a development testing program. RM-4317-1-NASA, Contract No. NASr-21.

Breipohl, A. M., Prairie, R. R., and Zimmer, W. J. (1965). A consideration of the Bayesian approach in reliability evaluation. IEEE Transactions on Reliability, R-14, No. 2.

Hald, A. (1952). Statistical Theory with Engineering Applications, John Wiley and Sons, Inc., New York, N. Y.

Hamilton, C. W. Bayesian procedures and reliability information. Research Associate, Battelle Memorial Institute.

Howard, R. A. (1966). Bayesian decision models for system engineering. IEEE Transactions on Systems Science and Cybernetics, SSC-1, No. 1, 36-40.

Press, S. J. (1965). Statistical estimation by the empirical Bayes method: some extensions and logistical applications. Prepared for USAF under Project RAND-Contract No. AF 49(638)-700.

Robbins, H. An empirical Bayes approach to statistics. Prepared for the USAF under Contract DA-04-200-ORD-355.

Section 6 - Conclusions and Recommendations

Doyon, L. R. and Siegnann, M. J. (1966). High-power high-frequency reliability techniques, Annual Symposium on Reliability, San Francisco, California, 180-197.

Proschan, F. (1963). Theoretical explanation of observed decreasing failure rate, Technometrics, 5, 375-383.

Appendix A

Abramowitz, M. and Stegun, I. A. (1965). Handbook of Mathematical Functions with Formulas, Graphs, and Mathematical Tables, Dover Publication, N. Y.

Addelman, S. (1963). Techniques for constructing fractional replicate plans, Journal of the American Statistical Association, 58, 45-71.

Bosinoff, I. (1965). Design Techniques for Reliability Prediction, Eleventh National Symposium on Reliability and Quality Control, Miami Beach, Florida.

Kendall, M. G. (1948). The Advanced Theory of Statistics, Vol. 1, Charles Griffin and Co., Ltd., London, England.

Marini, Brown, and Williams (1958) Evaluation and prediction of circuit performance by statistical techniques. Aeronautical Radio, Inc., Monograph No. 5, Publication No. 113.

West, W. J. and Scheffler, H. S. (1961). Design considerations for reliable electronic equipment. Northeast Research and Engineering Meeting, Boston, Mass.

Appendix B

Box, G. E. P. and Muller, M. A. (1958). A note on the generation of random normal deviates, AMS, 29, 610-613.

Dwyer, P. S. (1951). Linear Computations, John Wiley and Sons, Inc., New York, New York.

Hull, T. E. and Dobell, A. R. (1962). Random number generators, SIAM Review, 4, 230-254.

Peach, P. (1961). Bias in pseudo-random numbers, JASA, 56, 610-618.

Tommerdahl, J. B. and Nelson, A. C. (1963). Study of failure-rate distributions of series-parallel configurations, Final Report Signal Corps Contract DA 36-039-SC-90822, DA Project No. 3X90-90-004, ASTIA Doc. No. AD-418608.

APPENDIX A

Computer Programs For Performance Variation Analysis

A.1. Introduction

This Appendix describes the computer programs that have been written at RTI for performing a performance variation analysis. The programs as written assumed that a model relating performance to inputs, loads, component characteristics, and environmental stresses is known. The model may be obtained analytically or empirically or more usually by a judicious combination of both analytical and empirical methods.

If the model is obtained by empirical means, it is generally of relatively simple form, such as a linear function of the element parameters, inputs, loads, and environments. For simple models, a performance variation analysis usually can be performed without the aid of a computer program. However, in general the models are complex, such as a system of equations or differential equations. For these situations a collection of appropriate computer programs will help to systematize a performance variation analysis.

The following section will describe the general approach and later sections will present specific details of some programs; namely, Monte Carlo simulation, sensitivity and moment analysis, interaction, multiple regression and other programs.

A.2. Performance Variation Analysis (PVA)

A functional flow sheet of the programs is given in Figure A.1. The core of the programs is a model in explicit or implicit form,

$$Y_j(t) = g_j[\underline{X}(t), \underline{U}(t)]$$

or

$$g_j[\underline{X}(t), Y_j(t), \underline{U}(t)] = 0,$$

where

$Y_j(t)$ is the jth performance attribute or measure,

$\underline{X}(t)$ is a vector of environment inputs, such as environmental stresses and loads,

$\underline{U}(t)$ is a vector of component or part characteristics,

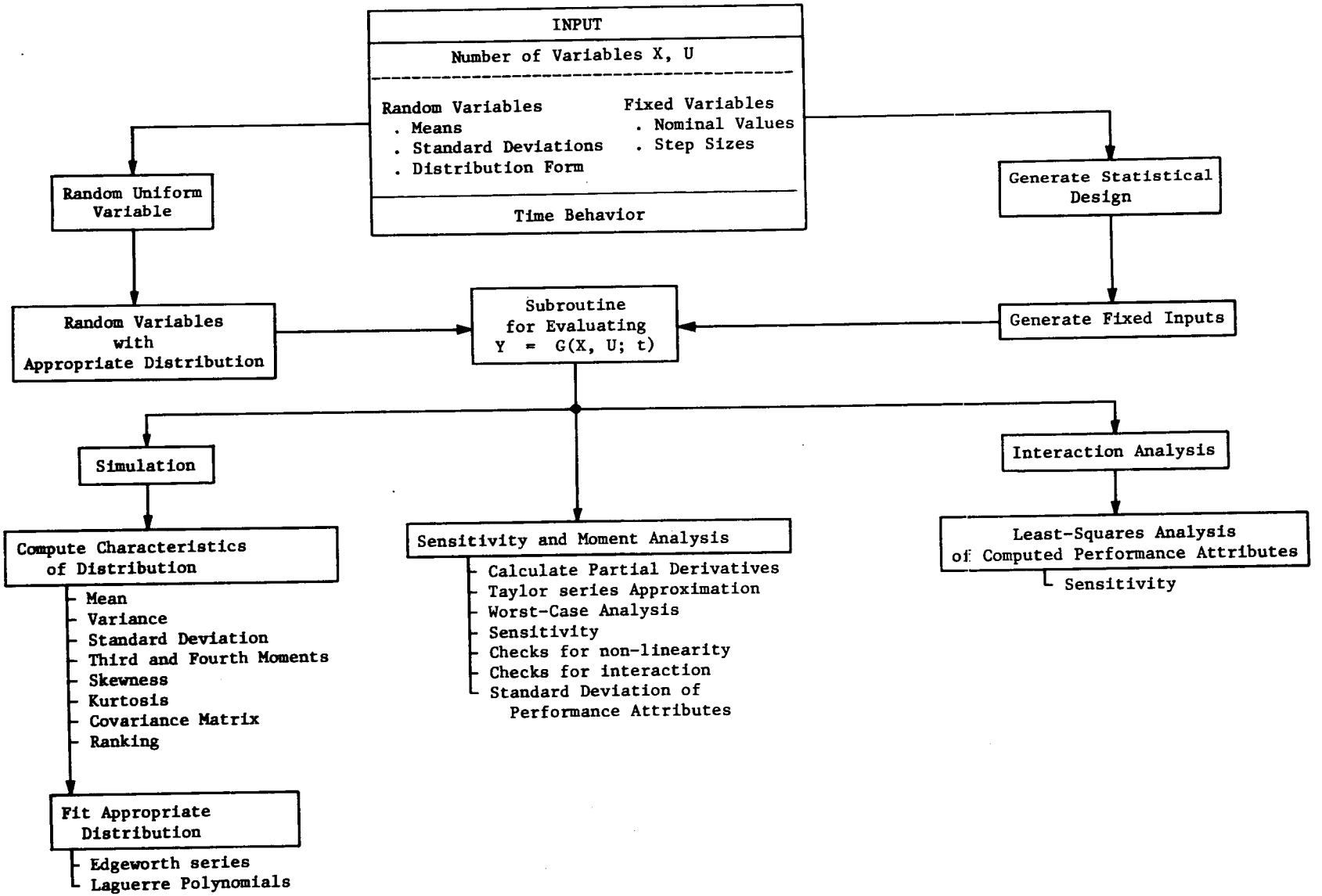

Figure A-1 - Flow Sheet for Performance Variation Analysis Programs

t is the time variable, and

$g_j, j = 1,\ldots,N$, is the set of models corresponding to the number of responses or the order of the differential equations which describe the transient behavior of the system.

For example, the model may be of the form of a system of differential equations,

$$\frac{\partial^2 Y_1}{\partial t^2} + c_1 \frac{\partial Y_1}{\partial t} + c_2 Y_2 = c_3$$

$$\frac{\partial Y_2}{\partial t} + c_4 Y_2 + c_5 Y_1 = c_6 \ ,$$

where the c_i depend on the $\underline{X}$ and $\underline{U}$ through a set of explicit expressions.

The time behavior for the model may appear in one of several ways. For example, it may be a gradual deterioration of a component and hence result in a corresponding change in the values of one or more of the component characteristics. In order to analyze an element or system for this type of degradation, the wearout characteristics of the system must be known or estimates must be available.

A second way in which time may appear is through the mission profile. For example, if it is known that the temperature profile is critical and how the part characteristics vary with temperature such as knowing a temperature coefficient, then an analysis can be performed by describing the temperature-part characteristic behavior by deterministic and/or random components and performing the analysis at several times in the mission life.

In addition, time may enter the analysis directly through the transient behavior. In this case a program for solving differential equations may be required for relating the transient characteristics to the pertinent element parameters, inputs, etc.

In whatever manner time enters the analysis, it is assumed that it may be included by a procedure such as one of the following:

1. A deterministic function of time such as a linear or exponential decay function.
2. An autoregressive scheme such as

$$x_{jt} = A_1 x_{j,t-1} + A_2 (x_{j,t-1} - x_{j,t-2}).$$

3. A stochastic process such as a normal stationary process superimposed on a deterministic drift.
4. A system of differential equations.

The time has not been explicitly included in the programs to date. However, the time behavior may be included through time dependent distributions as inputs to the analysis at discrete times in life.

Input - The input to the programs will be a mathematical description of the models (and the time behavior if required), the number of variables involved, (the number which are random and which are fixed), the means or nominal values of the variables, the standard deviations or step sizes in the variables, the distributions (if available), and the correlations of the variables. An additional input that will be required of some analyses is a selection of values of the element parameters at which the models are to be evaluated. The points can be selected methodically according to some statistical design. This selection will allow for efficient generation of the outputs to use in a multiple regression analysis. This approach will only be used under certain circumstances which will be considered later.

Programs - There are four basic programs that are being used in a performance variation analysis: (1) Simulation, (2) Sensitivity and Moment Analysis, (3) Interaction Analysis, and (4) Multiple Regression. The first three programs have been written, the fourth program may be any one of several available programs to perform a least squares analysis. Copies of the first three programs along with a description of the inputs and a specific simple example are given in Appendix C.

A.3. Simulation Program

A Monte Carlo simulation is used to estimate or characterize the performance distribution in terms of the distributions of the inputs, element characteristics, etc. If the input variables are normally distributed, the means, standard deviations, and the correlation matrix are required. For variables which are not normally distributed the appropriate distribution characteristics must be specified. The distribution may be any one of the following:

(1) Uniform
(2) Normal
(3) Log-Normal
(4) Exponential
(5) Weibull
(6) Gamma (Integral values of one parameter)
(7) Chi-Square
(8) Triangular
(9) Beta (Integral values of both parameters).

A uniform variable is generated first and it is transformed according to the methods described in Appendix B to a variable having the appropriate distribution. These variables are then used to compute performance measures such as voltage output, current output, power dissipation, etc. The performance measures are generated a number of times according to the desired precision of the results. If the inputs are precisely known the number of trials necessary for estimating the distribution function of the performance measure to the required degree of precision for a one-dimensional distribution can be estimated from the Kolmogoroff-Smirnov statistic for the maximum deviation d between the sampled distribution function and the true but unknown distribution function. The following table displays the number of observations N necessary, in order that the chance is α that the maximum deviation between the distribution function and the sample function exceeds the value d.

Table A.1

Percentiles of the Distribution of d

for Several Values of $1-\alpha$

N	$1-\alpha$ 0.80	0.85	0.90	0.95	0.99
5	0.45	0.47	0.51	0.56	0.67
10	0.32	0.34	0.37	0.41	0.49
20	0.23	0.25	0.26	0.29	0.35
30	0.19	0.20	0.22	0.24	0.29
40	0.17	0.18	0.19	0.21	0.25
50	0.15	0.16	0.17	0.19	0.23
For larger values of N	$\frac{1.07}{\sqrt{N}}$	$\frac{1.14}{\sqrt{N}}$	$\frac{1.22}{\sqrt{N}}$	$\frac{1.36}{\sqrt{N}}$	$\frac{1.63}{\sqrt{N}}$

Hence, if N is 50 the chance is 0.05 that the maximum deviation between the sample distribution function and the actual distribution function exceeds 0.19; if N = 100, d = 0.136, and if N = 1000, d = 0.043. In order to obtain high precision it is not uncommon to find that a very large number of simulation trials are performed, say 5,000.

In practice the distributions of the component characteristics are not known very precisely. Hence there is a precision of the distribution of the performance measure beyond which it is impractical to attempt to estimate the true distribution. In fact, very often a uniform distribution of the input variable is assumed because of the lack of knowledge concerning the true distribution.

Suppose now that a rational procedure is available for estimating N and that N values of the performances have been computed. Then the N observations are ranked in ascending order, their first four central moments are computed, and the measures of skewness and kurtosis are obtained. From the statistics one can decide which distribution to fit to the data or which series approximations to use. The approximating distributions can be fitted by the method of moments.

In this program the Edgeworth series and/or Laguerre polynomials are used to approximate the unknown distribution function. The methods for fitting these distributions are given in Kendall (1948, Vol. 1)

A.4. Sensitivity and Moment Analysis

This program obtains Taylor-Series approximations to the models and subsequently uses them to predict worst-case performances, to estimate sensitivities of performance measures to inputs, to check for non-linearities and interactions of behavior with respect to inputs, and to perform a moment analysis. The inputs to this program are as described previously in Section A.2.

The step sizes or some multiple of the standard deviations are chosen to include the expected range of variation of the variables as a result of the environments described by the mission profile, the inherent variations in the part characteristics, and the aging effects.

Computation of the First and Second Partial Derivatives

The first part of the computation involves estimation of the first and second partial derivatives of the performance measures of interest with respect to each of the pertinent part characteristics, inputs, loads, etc.; the program uses the five-point central difference formulas for obtaining the partial derivatives. The first partial derivative is

$$Y' = \left.\frac{\partial Y}{\partial X}\right|_{\underline{X}_N} = \frac{1}{12DX}(Y_1 - 8Y_2 + 8Y_4 - Y_5). \qquad (A.1)$$

The second partial derivative is

$$Y'' = \left.\frac{\partial^2 Y}{\partial X^2}\right|_{\underline{X}_N} = \frac{1}{DX^2}(Y_4 - 2Y_3 + Y_2)$$

$$- \frac{1}{12DX^2}(Y_5 - 4Y_4 + 6Y_3 - 4Y_2 + Y_1)$$

$$= \frac{1}{12DX^2}(-Y_5 + 16Y_4 - 30Y_3 + 16Y_2 - Y_1) \qquad (A.2)$$

where $\underline{X}_N$ is the vector of nominal or mean values of the variables, and Y_i is the value of the performance measure at the i th value of X, i = 1,2,3,4,5. The values of X are equally spaced and at a distance DX apart. The above two formulas can be obtained directly from difference formulas and their derivation is given in Abramowitz and Stegun (1965, Section 25) .

Having obtained the first and second partial derivatives of a performance measure with respect to the independent variables a Taylor series expansion can be written as follows,

$$Y(\Delta X_1, \Delta X_2, \ldots) \simeq Y_N + \Sigma \left.\frac{\partial Y}{\partial X_i}\right|_{\underline{X}_N} \Delta X_i + \frac{1}{2} \Sigma \left.\frac{\partial^2 Y}{\partial X_i^2}\right|_{\underline{X}_N} \overline{\Delta X_i}^2 + \ldots, \qquad (A.3)$$

where

$\Delta X_i = X_i - X_{iN}$, deviation of the value of the i th variable X_i from its nominal value X_{iN},

$\underline{X}_N = (X_{1N}, X_{2N}, X_{3N}, \ldots)$, and

Y_N = nominal value of Y.

In particular if $\Delta X_i = 2DX_i$ ($= h_i$) i.e., equal to twice the input step size (or equal to the expected extreme deviation for the i th variable), then

$$Y(h_1, h_2, \ldots) \simeq Y_N + \Sigma\, Y_i' \quad h_i + \frac{1}{2} \Sigma\, Y_i'' h_i + \ldots \quad .$$

Dividing by Y_N yields

$$\frac{Y}{Y_N} \sim 1 + \Sigma\, LS_i + \Sigma\, QS_i, \qquad (A.4)$$

where

QS_i = a measure of linear sensitivity of the performance measure to the i th variable

$$LS_i = \frac{Y_i' h_i}{Y_N}, \qquad (A.5)$$

and

QS_i = a measure of second degree or quadratic sensitivity (denoted as non-linear sensitivity in the program output) of the performance with respect to the i th variable and is given by

$$QS_i = \frac{1}{2} Y''_i h_i^2 / Y_N \cdot \qquad (A.6)$$

These two quantities are printed out for each of the N variables. The sensitivity measure associated with the i th variable is essentially the relative change in the performance measure as a function of the maximum expected change in the i th variable. The definitions of sensitivity and non-linearity were suggested by the Taylor-series expansion and appear to be useful definitions. There are other definitions of sensitivity appearing in the literature. For example, see Bosinoff (1965) and West and Scheffler (1961). The definitions used in this program are very convenient in estimating the percent (or relative) change in Y for the expected changes in the independent variables.

The Taylor series expansion as presented in (A.3) does not include terms with mixed partial derivatives. To obtain the second partial derivatives with respect to all pairs of independent variables would require considerably more computing time. It was decided to perform the computation using only the first partials and the pure second partials and check the series approximations for its adequacy. Then if the results are not as precise as required, the appropriate mixed second partials would be obtained. These will be obtained by another program described later under the heading of Interaction Analysis.

Worst Case Limits

The worst case limits are computed by the procedure described by West and Scheffler (1961). The signs of the first partial derivatives are examined and the variables for which they are positive are placed at their expected high values, X + h, and if negative, their low values, X - h, in order to estimate an upper end limit. Conversely, to estimate a lower limit the variables for which Y' is positive are placed at the low values, and if negative, their high value. The worst case limits of the performance measures are computed by actually substituting the appropriate values of the variables into the functions. The computed worst-case limits are then compared to the estimated limits using the Taylor series expansion.

If these values do not check, it indicates the importance of omitted terms such as the mixed partial derivatives (interactions) and/or higher order terms for some of the variables. The latter is quickly checked for one variable at a time by comparing the functional value at the two end points with that estimated by the first and second partials with respect to that variable. These checks suggest the nature of the lack of precision, if it exists.

Interaction Analysis

In case the worst-case limits computed directly from the functions are not adequately approximated by the linear and pure quadratic terms, it is necessary to compute the mixed partial derivatives for the pairs of variables which are expected to yield significant interaction effects. The mixed partials can be computed by one of the following two methods.

One procedure would be to compute the first partial derivatives with respect to the i-th variable at five different values of the j-th variable. These partials would in turn be used to compute the second partial. This procedure assumes a degree of smoothness of the analytical function.

A second procedure would be to generate the performance measure for selected sets of values of the independent variables and then fit by regression techniques the functional form

$$Y = b_0 + \Sigma\, b_i X_i + \Sigma\, b_{ii} X_i^2 + \Sigma\Sigma\, b_{ij} X_i X_j \quad .$$

This assumes all higher order effects can be adequately accounted for by a second degree polynomial function. The coefficients of the terms $X_i X_j$ would correspond to the mixed partials under the assumption. The selection of the values of the variables can be performed efficiently by the method of statistical designs for factorial experiments. Methods for generating the appropriate design are described by Addelman (1963). An additional program has been written to perform this computation and provide an output compatible with the input for multiple regression programs. An example of this program is given in Appendix C.

Moment Analysis

The moments of the performance measures can be obtained from the simulation runs as described in Section A.3 or from an error propagation analysis

based on the Taylor-series approximation. The latter is simpler to compute and not subject to sampling fluctuations as is the former. However, the series approximation is subject to the lack of precision with which it approximates the true function.

Let

$$Y \simeq Y_N + \sum_i \frac{\partial Y}{\partial X_i}\bigg|_{\underline{X}_N} \Delta X_i + \frac{1}{2}\sum \frac{\partial^2 Y}{\partial X_i^2}\bigg|_{\underline{X}_N} \Delta X_i^2$$

$$+ \frac{1}{2}\sum\sum \frac{\partial^2 Y}{\partial X_i \partial X_j}\bigg|_{\underline{X}_N} \Delta X_i \Delta X_j \ .$$

If only the first order terms are used, the estimates of the mean and variance of Y, denoted by $\hat{\mu}\{Y\}$ and $\hat{\sigma}^2\{Y\}$ respectively, are given by

$$\hat{\mu}\{Y\} = Y_N$$

$$\hat{\sigma}^2\{Y\} = \sum\sum \frac{\partial Y}{\partial X_i}\bigg|_{\underline{X}_N} \frac{\partial Y}{\partial X_j}\bigg|_{\underline{X}_N} \hat{Cov}\{X_i, X_j\}$$

where

$$\hat{Cov}\{X_i, X_j\} = \hat{\sigma}\{X_i\}\ \hat{\sigma}\{X_j\}\, r\{X_i, X_j\}$$

$\hat{\sigma}\{X_i\}$ = estimated standard deviation of the measurements X_i,

$r\{X_i, X_j\}$ = estimated simple correlation of the measurements on X_i and X_j .

If X_i and X_j are characteristics of two distinct components, then $r\{X_i, X_j\} = 0$; otherwise, it is estimated by

$$r\{X_i, X_j\} = \frac{\Sigma(X_{ik} - \bar{X}_i)(X_{jk} - \bar{X}_j)}{\{\Sigma(X_{ij} - \bar{X}_i)^2 \cdot \Sigma(X_{jk} - \bar{X}_j)^2\}^{1/2}}.$$

If the first and second order terms (not including the mixed partials - interactions terms) are used in the approximation, then further terms are required in the moment analysis.

Let

$$Y'_i \quad \text{denote} \quad \left.\frac{\partial Y}{\partial X_i}\right|_{\underline{X}_N}$$

and

$$Y''_{ij} \quad \text{denote} \quad \left.\frac{\partial^2 Y}{\partial X_i \partial X_j}\right|_{\underline{X}_N},$$

then the estimated mean and variance for Y can be written as

$$\hat{\mu}\{Y\} = Y_N + \frac{1}{2} \Sigma\, Y''^{2}_i\, \hat{\sigma}^2\{X_i\}$$

$$\hat{\sigma}^2\{Y\} = \Sigma\, Y'^{2}_i\, \sigma^2\{X_i\} + \frac{1}{4} \Sigma\, Y''^{2}_i\, [\hat{\mu}_{4i} - \hat{\sigma}^4\{X_i\}]$$

$$+ \Sigma\Sigma\, Y'_i Y'_j\, \hat{\mathrm{Cov}}\{X_i, X_j\}$$

$$+ \frac{1}{4} \Sigma\Sigma\, Y''_i Y''_j\, [\hat{E}\{\Delta X_i^2\, \Delta X_j^2\} - \hat{\sigma}^2\{X_i\}\, \hat{\sigma}^2\{X_j\}]$$

$$+ \frac{1}{2} \Sigma\, Y'_i Y''_i\, [\hat{\mu}_{3i}]$$

$$+ \frac{1}{2} \Sigma\Sigma\, Y'_i Y''_j\, \hat{E}\{\Delta X_i\, \Delta X_j^2\},$$

where $E\{X\}$ denotes the expected or mean value of X and $\hat{\mu}_{3i}$ and $\hat{\mu}_{4i}$ are the estimated third and fourth moments of X_i, $i = 1,\ldots,L$. A similar expansion may be obtained with the interaction terms included.

In the above analysis it has implicitly been assumed that the relationship between the performance measure Y and the part characteristics, X_i, $i = 1,\ldots,L$ is known, that is, the coefficients are known. However, in practice the relationship may be obtained from empirical data and the coefficients may be considered estimates of true but unknown values. The extent to which the data are available should then be reflected in the precisions of the inputs to the error propagation analysis. A complete discussion of this problem is given in Marini, Brown, and Williams (1958).

APPENDIX B

Randon Number Subroutines

B.1. Random Uniform Numbers

A widely used method for generating uniform numbers on the interval (0,1) is by means of the congruence relation

$$x_i = \lambda x_{i-1} + \mu \pmod{m}, \qquad (B.1)$$

and form the sequence $\{x_i/m\} = \{u_i\}$. See Hull and Dobell (1962) for an extensive discussion of this procedure. The sequence defined by (B.1) has full period m provided that

(i) μ is relatively prime to m;

(ii) $\lambda \equiv 1 \pmod{p}$ if p is a prime factor of m;

(iii) $\lambda \equiv 1 \pmod{4}$ if 4 is a factor of m.

With m a power of 2, μ must be an odd number, and $\lambda \equiv 1 \pmod{4}$.

The sequence generated by this procedure is not truly random and should more properly be called pseudo-random numbers. A further discussion of the behavior of these numbers is given in Peach (1961). Some subsequences exhibit characteristics which may reduce the variance of the observed results. The constants in (B.1) are chosen to minimize these possible difficulties.

Random uniform numbers on the interval (a, b) are obtained by the transformation

$$y_i = a + (b - a)u_i .$$

B.2 Random Normal Numbers $-N(\mu,\sigma^2)$

Box and Muller (1958) give a very convenient procedure for generating a pair of independent and normally distributed variables with mean zero and unit variance from two independent uniform variables on (0,1), i.e.

$$x_1 = (-2 \log_e u_1)^{1/2} \cos(2\pi u_2)$$

$$x_2 = (-2 \log_e u_1)^{1/2} \sin(2\pi u_2).$$

One can then transform the x_i to obtain normally distributed variables with mean μ and variance σ^2,

$$y_i = \mu + \sigma x_i .$$

B.3 Correlated Normal Variables

Suppose that one is analyzing a circuit containing a component on which two or more measurements are made, for example, the h-parameters of the equivalent circuit analysis of a transistor. Such measurements are usually correlated and in a Monte Carlo analysis one must generate random variables with the appropriate correlations. Suppose that the variables (assume k in number) are normally distributed with simple correlation matrix R,

$$R = \begin{vmatrix} 1 & \rho_{12} & \rho_{13} & \cdots & \rho_{1k} \\ \rho_{12} & 1 & \rho_{23} & \cdots & \rho_{2k} \\ \cdot & \cdot & \cdot & & \cdot \\ \cdot & \cdot & \cdot & & \cdot \\ \cdot & \cdot & \cdot & & \cdot \\ \rho_{1k} & \rho_{2k} & \rho_{3k} & \cdots & 1 \end{vmatrix} .$$

To generate a set of variables with a multivariate normal distribution with the above correlation matrix one needs a linear transformation to transform independent normal variables to correlated normal variables. The appropriate transformation is obtained by an algorithm used in the square-root method for solving a system of linear equations as given in Dwyer (1951, pp. 113-7). Let the transformation matrix be denoted by S and given by

$$S = \begin{vmatrix} s_{11} & s_{12} & \cdots & s_{1k} \\ 0 & s_{22\cdot(1)} & \cdots & s_{2k\cdot(1)} \\ \cdot & \cdot & \cdot & \cdot \\ \cdot & \cdot & \cdot & \cdot \\ \cdot & \cdot & \cdot & \cdot \\ 0 & 0 & 0 & s_{kk\cdot(k-1)} \end{vmatrix} .$$

The elements of S are obtained by the following formulas.

$$s_{1j} = \frac{\rho 1j}{\rho 11} = \rho_{1j} \text{ , } \rho_{ii} = 1 \text{ , all i ,}$$

$$s_{ii\cdot(h)} = \sqrt{1 - s_{1i}^2 - s_{2i\cdot(1)}^2 - \cdots - s_{hi\cdot(h-1)}^2} ,$$

$$s_{ij\cdot(h)} = \frac{\rho ij - s_{1i}s_{1j} - s_{2i\cdot(1)}\,2j\cdot(1) - \cdots - s_{hi\cdot(h-1)}s_{hj\cdot(h-1)}}{s_{ii\cdot(h)}} ,$$

for h = 1, 2, ..., k-1 .

The correlated variables are then obtained by means of the transformation

$$\underline{y} = \underline{x}S ,$$

or

$$y_1 = x_1$$

$$y_2 = \rho_{12}x_1 + \sqrt{1 - \rho_{12}^2}\; x_2 , \text{ etc.}$$

In order to obtain a set of correlated variables $\underline{z}$ with covariance matrix Σ = DRD and mean $\underline{\mu}$, the y's will have to be transformed by

$$\underline{z} = \underline{y}\,D + \underline{\mu}$$

where

$$\underline{z} = (z_1, \ldots, z_k)$$

$$\underline{y} = (y_1, \ldots, y_k)$$

$$\underline{\mu} = (\mu_1, \ldots, \mu_k)$$

$$D = \begin{vmatrix} \sigma_1 & 0 & \cdot & \cdot & \cdot & 0 \\ 0 & \sigma_2 & & & & \cdot \\ \cdot & & \cdot & & & \cdot \\ \cdot & & & \cdot & & \cdot \\ \cdot & & & & \cdot & 0 \\ 0 & & & & 0 & \sigma_k \end{vmatrix}$$

where σ_i is the standard deviation of z_i, i = 1, 2, ..., k.

B.4 Logarithmic Normal Variables

These are easily generated by starting with a normal variable y with mean μ and variance σ^2 and let

$$z = e^y .$$

These will be generated in pairs just as for the normal distribution. Hence ln z = y has a normal distribution as required and the probability density of z is

$$p\{z\} = \frac{1}{\sqrt{2\pi}\ \sigma z}\ e^{-\frac{1}{2\sigma^2}(\ln z-\mu)^2} .$$

B.5 Exponential Variables

Let u_i be a uniformly distributed variable on the interval (0,1) then

$$y_i = \frac{-\ln u_i}{\lambda}$$

has an exponential distribution. The probability density function for y is

$$p\{y\} = \lambda e^{-\lambda y}\ , 0 < y < \infty\ ,\ \lambda > 0,$$

B.6 Gamma Variables

Let y_i be an exponential variable, then

$$g = \sum_{i=1}^{p} y_i$$

is a gamma variable with distribution parameters λ and p, $G(\lambda,p)$. In this manner one obtains only those gamma variables for integral values of p. These will be sufficient for almost all simulation analyses. However, if further gamma variables are required then additional techniques must be provided. The probability density function for g is

$$p\{g\} = \frac{\lambda^p}{\Gamma(p)}\ e^{-\lambda g}\ g^{p-1}, \lambda > 0\ ,\ p \geq 1\ .$$

B.7 Beta Variables

Similarly one can obtain beta variables for integral values of the two parameters as the following ratio,

$$b = \frac{g_1}{g_1 + g_2}$$

where

g_1 is $G(1,p_1)$,

g_2 is $G(1,p_2)$,

then b is $B(p_1,p_2)$. The probability density function for b is

$$p\{g\} = \frac{\Gamma(p_1 + p_2)}{\Gamma(p_1)\Gamma(p_2)} \; b^{p_1-1} \; (1-b)^{p_2-1}, \quad 0 \leq b \leq 1 .$$

B.8 Weibull Variables

If u is a uniform variable then

$$w = \left(\frac{-\ln u}{\lambda}\right)^{1/\alpha}$$

is a Weibull variable having the probability density

$$p\{w\} = \alpha\lambda \; w^{\alpha-1} \; e^{-\lambda w^{\alpha}} .$$

Appendix C

Description of Performance Variation Analysis Programs

C.1. Introduction

The three performance variation analysis programs as discussed in Appendix A and in Section 3 of this report are described in further detail in this Appendix as to specific inputs. The description assumes that the reader is familiar with the FORTRAN programming language. A user of these programs must be able to write the FORTRAN subroutine for computing the performance attributes as a function of the independent variables. This subroutine is used in conjunction with the main programs listed in this Appendix to perform the desired calculations.

A simple example is used to illustrate the inputs and outputs for each program. A listing of the programs is given at the end of this Appendix. To the extent possible the programs were written to be compatible with respect to input.

C.2. Performance Variation Analysis - Simulation

General Description

This particular program starts with a set of mathematical models relating the performance attributes of interest to the part and interface characteristics of the element or equipment under study. The distributions of the independent variables are given or specified. In case a multivariate normal distribution is assumed, the correlations between the variables are read as input when they are different from zero. The independent variables are generated at random using the appropriate generator subroutine and the values of the performance attributes obtained. These performance values are ranked in ascending order, and the moments and related characteristics of the sample performance distribution are computed. Either an Edgeworth series or Laguerre polynomial is fitted to the sample distribution and the percentiles of the performance distribution are computed corresponding to certain performance values.

Input Description

1. The first card has the starting value, XN, for the random number generator. Format (F10.0.)
2. This card gives the number of models (not more than five) followed by a four letter identifier for each model. Format (I2, 5A4).

3. This card provides the actual number of variables and the number of correlated variables for each model, and the number of simulation trials for all models. Format (11I5).
4. These cards contain information necessary for a readable output. The first contains the names of the distributions of the random number generators (each limited to twelve characters). The second has the names of the two polynomial fit routines, namely Edgeworth and Laguerre. Format (20A4).
5. The variable input cards contain nominal and deviation values, a parameter name, and a random number generator call value. The call value is the argument for a COMPUTED GO TO statement and calls the appropriate generator subroutine. Format (2E10.4,A4,I4). Those variables which have non-zero correlations with other variables must be read in first.
6. If there are correlated variables,the values are read as an upper triangular matrix. Format (16F5.0).

C.3. Performance Variation Analysis - Sensitivity and Moment Analysis

General Description

The sensitivity and moment analysis program begins with a mathematical model for each of the performance attributes and nominal and expected extreme values of each of the part and interface characteristics. From this information it computes the first and second partial derivatives by numerical methods, measures of sensitivity, worst-case limits on performance, and measures of the adequacy of a linear and a second-degree Taylor series approximation.

Input Description

1. Model identification is on the first card. The number of models, not to exceed 10, is followed by four letter model descriptors. Format (I2,10A4).
2. The next card gives the variable information for each model. The number of variables for each model, not to exceed 20, is in format (10I2).
3. These cards are identical to the cards described in the simulation program. The nominal and deviation values (one-half the expected extreme deviation values) are in the same format and the variable name should also be given, (2E10.4,A4).

4. The correlations between all pairs of variables are read in as an upper triangular matrix. Format (16F5.0).

C.4. Performance Variation Analysis - Interaction Analysis

General Description

The interaction analysis program starts with the mathematical models, nominal values and expected extreme deviations of the independent variables, a statistical design procedure for generating the levels of the independent variables at which the performance values are to be obtained. The performance values are used in a least squares analysis to obtain a second degree relationship involving linear and product terms of the form

$$\hat{Y} = b_0 + b_1 x_1 + b_2 x_2 + b_{12} x_1 x_2 \quad .$$

The sensitivity of the performance attribute to the independent variables is then obtained by a procedure similar to that used in the previous program. The sensitivities may not agree precisely with those given by the moment and sensitivity analysis program as the latter uses five points as opposed to two for the interaction program.

Input Description

1. Card one is for the number of models, Format (I2).
2. Card two specifies the total number of independent variables (NV) and the (alphanumeric) name for the dependent variable. Format (I2,A4).
3. The variable cards specify the nominal values and deviations of each independent variable, as well as its (alphanumeric) name. There is one card for each variable. Format (2E10.4,A4).
4. This control card indicates the number of variables (NVT) to be used in the interaction analysis (NVT $\leq$ NV) and the number of variables whose levels are to be computed (NVU). If NVT = NVU, all combinations are considered; otherwise NVU < NVT. Format (2I2).
5. Card five indicates, by subscripts, the variables selected for analysis. The number of values appearing should be NVT in format (20I2).
6. Card 6 is omitted if NVT = NVU. Otherwise it specifies, by subscripts, the NVU variables to be computed. Format (20I2).

Cards 2-6 are repeated for each model. The deviations specified on Card 3 are doubled for the least squares analysis. That is, the upper and lower limits considered for each variable are the nominal values plus and minus twice the deviations given on Card 3.

C.5. Illustrative Example for Input and Output

A second degree polynomial was chosen for illustration of these programs.

$$Y = 1 + 2X_1 + 2X_2 + 3X_1X_2 + 4X_1^2 + 4X_2^2 \quad .$$

There are two independent variables, X_1 and X_2, and one dependent variable Y denoted by POLY in the program input. One hundred (100) simulation trials were performed assuming X_1 and X_2 are normally distributed with means 10 and 5 and standard derivations 0.2 and 0.05, respectively, and correlation 0.5. These same inputs are used in all three programs.

In the interaction analysis program one needs to indicate which independent variables, from those available, are to be used in the analysis. In the specific example there are only two such variables and both of them are used as indicated by inputs 4 and 5. If there were 10 variables in all and only five variables to be used in the analysis, e.g. variables numbered 1, 3, 5, 8, and 10, then input 5 would be these numbers in the appropriate format and input 4 would be NVT = 5 and NVU = 5 provided all 2^5 combinations of the 5 variables were used. See Addelman (1963) for methods of statistical design of experiments for using a fraction of 2^5 runs. The inputs and outputs for the three programs are listed on the following pages. The outputs are compatible to the Bunker-Ramo 340.

Inputs (Card Image)

Simulation Analysis

```
1          1697.
2       1POLY
3          2     2  100
4      UNIFORM       NORMAL       LOG NORMAL  EXPONENTIAL WEIBULL      GAMMA        BETA
          CHI SQUARE
       EDGEWORTH    LAGUERRE
5       .1000E 02 .2000E 00 X1     2
        .5000E 01 .5000E-01 X2     2
6       1.0   0.5   1.0
```

Sensitivity and Model Analysis

```
1       1POLY
2       2
3       .1000E 02 .2000E 00 X1     2
        .5000E 01 .5000E-01 X2     2
4       1.0   0.5   1.0
```

Interaction Analysis

```
1       1
2       2POLY
3       .1000E 02 .2000E 00 X1
        .5000E 01 .5000E-01 X2
4       2 2
5       1 2
```

Outputs to Performance Variation Analysis Program

Simulation Analysis for POLY

MODEL 1, POLY		VAR. NAMES	NOMINAL VALUE	DEVIATION	DISTRIBUTION
	1	X1	.10000E 2	.20000E 0	NORMAL
	2	X2	.50000E 1	.50000E -1	NORMAL

INPUT CORRELATIONS

.500

INPUT CHECK

MODEL 1, POLY		VAR. NAMES	NOMINAL VALUE	DEVIATION	DISTRIBUTION
	1	X1	.99866E 1	.20871E 0	NORMAL
	2	X2	.50019E 1	.65881E -1	NORMAL

INPUT CORRELATIONS

.608

DEPENDENT DATA LISTED IN ASCENDING ORDER

I	I/N	POLY								
1	.010	.6522E	3	39	.390	.6735E	3	77	.770	.6962E	3
2	.020	.6546E	3	40	.400	.6740E	3	78	.780	.6981E	3
3	.030	.6562E	3	41	.410	.6740E	3	79	.790	.6983E	3
4	.040	.6589E	3	42	.420	.6748E	3	80	.800	.6986E	3
5	.050	.6603E	3	43	.430	.6750E	3	81	.810	.7012E	3
6	.060	.6634E	3	44	.440	.6755E	3	82	.820	.7013E	3
7	.070	.6678E	3	45	.450	.6758E	3	83	.830	.7021E	3
8	.080	.6694E	3	46	.460	.6764E	3	84	.840	.7024E	3
9	.090	.6704E	3	47	.470	.6774E	3	85	.850	.7039E	3
10	.100	.6716E	3	48	.480	.6786E	3	86	.860	.7040E	3
11	.110	.6754E	3	49	.490	.6786E	3	87	.870	.7051E	3
12	.120	.6767E	3	50	.500	.6788E	3	88	.880	.7056E	3
13	.130	.6779E	3	51	.510	.6790E	3	89	.890	.7062E	3
14	.140	.6780E	3	52	.520	.6791E	3	90	.900	.7067E	3
15	.150	.6794E	3	53	.530	.6799E	3	91	.910	.7096E	3
16	.160	.6807E	3	54	.540	.6817E	3	92	.920	.7099E	3
17	.170	.6812E	3	55	.550	.6820E	3	93	.930	.7113E	3
18	.180	.6814E	3	56	.560	.6833E	3	94	.940	.7117E	3
19	.190	.6815E	3	57	.570	.6851E	3	95	.950	.7125E	3
20	.200	.6815E	3	58	.580	.6856E	3	96	.960	.7147E	3
21	.210	.6834E	3	59	.590	.6858E	3	97	.970	.7158E	3
22	.220	.6837E	3	60	.600	.6858E	3	98	.980	.7167E	3
23	.230	.6847E	3	61	.610	.6860E	3	99	.990	.7272E	3
24	.240	.6850E	3	62	.620	.6860E	3	100	1.000	.7288E	3
25	.250	.6859E	3	63	.630	.6863E	3				
26	.260	.6860E	3	64	.640	.6864E	3				
27	.270	.6861E	3	65	.650	.6872E	3				
28	.280	.6876E	3	66	.660	.6882E	3				
29	.290	.6878E	3	67	.670	.6892E	3				
30	.300	.6892E	3	68	.680	.6893E	3				
31	.310	.6893E	3	69	.690	.6893E	3				
32	.320	.6896E	3	70	.700	.6903E	3				
33	.330	.6704E	3	71	.710	.6904E	3				
34	.340	.6706E	3	72	.720	.6906E	3				
35	.350	.6711E	3	73	.730	.6933E	3				
36	.360	.6715E	3	74	.740	.6933E	3				
37	.370	.6726E	3	75	.750	.6951E	3				
38	.380	.6734E	3	76	.760	.6953E	3				

MOMENTS

	POLY	
FIRST	.680057E	3
SECOND	.437902E	5
THIRD	-.243477E	5
FOURTH	.503257E	8
STD. DEV.	.210316E	2
SKEWNESS	-.265701E	-1
KURTOSIS	.262433E	-1

VARIANCE - COVARIANCE MATRIX, ORDER 1

POLY	.468040E	3

PERCENTAGE POINTS FOR POLY BY EDGEWORTH

Z = 616.96093	F(Z) =	-.82690E -2
Z = 627.47654	F(Z) =	-.11545E -1
Z = 637.99217	F(Z) =	.88139E -2
Z = 648.50779	F(Z) =	.83527E -1
Z = 659.02342	F(Z) =	.21687E 0
Z = 669.53905	F(Z) =	.36661E 0
Z = 680.05467	F(Z) =	.49822E 0
Z = 690.57030	F(Z) =	.63100E 0
Z = 701.08592	F(Z) =	.78309E 0
Z = 711.60155	F(Z) =	.91788E 0
Z = 722.11718	F(Z) =	.99259E 0
Z = 732.63280	F(Z) =	.10121E 1
Z = 743.14842	F(Z) =	.10086E 1

Sensitivity and Moment Analysis for POLY

FIRST AND SECOND PARTIAL DERIVATIVES (Y' AND Y'') OF POLY WITH RESPECT TO X

X	Y(X-2DX)	Y(X-1DX)	Y(X+1DX)	Y(X+2DX)	PARTIALS Y'	PARTIALS Y''	SENSITIVITY LINEAR	SENSITIVITY NON-LIN
X1	.64284E 3	.66175E 3	.70055E 3	.72043E 3	.96986E 2	.79590E 1	.56967E -1	.93499E -3
X2	.67384E 3	.67740E 3	.68460E 3	.68823E 3	.71995E 2	.78125E 1	.10572E -1	.57361E -4

ALL X AT NOMINAL, Y(X) = .68099E 3

STD DEV OF Y(X), .21425E 2

WORST CASE LIMITS

VALUE OF VARIABLE AT	LOWER LIMIT	AND AT UPPER LIMIT ,	X	DX
X1	.96000E 1	.10400E 2	.10000E 2	.20000E 0
X2	.49000E 1	.51000E 1	.50000E 1	.50000E -1

WORST CASE LIMITS AND NOMINAL VALUE

POLY	.63579E 3	.72779E 3	.68099E 3

INTERACTION CHECK USING 1ST AND 2ND DEGREE TERMS OF TAYLOR SERIES

POLY	.63567E 3	.72766E 3

INTERACTION CHECK USING 1ST DEGREE TERMS OF TAYLOR SERIES

POLY	.63500E 3	.72698E 3

GOODNESS OF FIT USING 1ST AND 2ND TERMS OF TAYLOR SERIES

VARIABLES	Y(X-2DX)/Y(X)	1.-SENS	1.-SENS+NON LIN	Y(X+2DX)/Y(X)	1.+SENS	1.+SENS+NON LIN
X1	.94397E 0	.94303E 0	.94397E 0	.10579E 1	.10570E 1	.10579E 1
X2	.98949E 0	.98943E 0	.98948E 0	.10106E 1	.10106E 1	.10106E 1

INTERACTION ANALYSIS FOR POLY

VARIABLE	NOMINAL VALUE	DX
X1	.10000E 2	.20000E 0
X2	.50000E 1	.50000E -1

CODED LEVELS OF THE VARIABLWS X(I)
0-LOW LEVEL 1-HIGH LEVEL

ROW	MOD-2 ARRAY OF VARIABLES	
1	0	0
2	0	1
3	1	0
4	1	1

ACTUAL LEVELS OF X(I) AND CORRESPONDING PERFORMANCE VALUES

ROW	X1	X2	POLY
1	.96000E 1	.49000E 1	.63579E 3
2	.96000E 1	.51000E 1	.64995E 3
3	.10400E 2	.49000E 1	.71316E 3
4	.10400E 2	.51000E 1	.72779E 3

COEFFICIENTS OF VARIABLES AND THEIR SENSITIVITIES

		COEFFICIENTS	SENSITIVITY
CONSTANT	B(0) =	.68167E 3	
X1	B(1) =	.96938E 2	.56938E -1
X2	B(2) =	.71480E 2	.10496E -1
X1 , X2	B(1, 2) =	.29087E 1	.85423E -4

```
      PERFORMANCE VARIATION ANALYSIS - SIMULATION

      DIMENSION HI(5),NV(5),J1(5),          SY1(5),SY2(5),SY3(5),SY4(5)
     1,SCP(5,5),TM(20),TSD(20),HD(20),A(3,10),IRAND(20),RHO(20,20),R(20,
     220),UR(2),D(20),RN(20),RS(20),RSS(20,20),R(100),Y(100,1),AMU1(5),A
     3MU2(5),AMU3(5),AMU4(5),SIG(5),GAM1(5),GAM2(5),STD(5),Z(5,13),ELPH(
     45,13),AH(2,3),X(20)
      COMMON UR,XN,LOOP,Z,GAM1,GAM2,AMU1,AMU2,SIG,ELPH,FLAG,X

C
C       INPUT GENERAL INFORMATION
C
C        XN . . . . STARTING VALUE FOR RANDOM NUMBER GENERATOR
C        NM . . . . NUMBER OF MODEL
C        HI . . . . MODEL NAMES (ALPHANUMERIC)
C        NV . . . . NUMBER OF VARIABLE IN MODEL
C        J1 . . . . NUMBER OF CORRELATED VARIABLES IN MODEL
C        LIM1 . . . NUMBER OF DATA POINTS TO BE GENERATED
C        A. . . . . SUBROUTINE NAMES (ALPHANUMERIC)
C        AH . . . . DISTRIBUTION NAMES (ALPHANUMERIC)
C        TM . . . . NOMINAL VALUES
C        TSD. . . . DEVIATION VALUES
C        HD . . . . VARIABLE NAMES (ALPHANUMERIC)
C        IRAND  . . RANDOM NUMBER CALL VALUE
C        RHO. . . . INPUT CORRELATIONS
      READ 98,XN
      READ 50,NM,(HI(I),I=1,NM)
      READ 51,(NV(I),J1(I),I=1,NM),LIM1
      READ 99,((A(I,J),I=1,3),J=1,10)
      READ 99,((AH(I,J),J=1,3),I=1,2)
       AN=LIM1
      LINE = 6
      LOOP=0
      DO 1 I=1,NM
      SY1(I)=0.
      SY2(I)=0.
      SY3(I)=0.
      SY4(I)=0.
      DO 1 J=1,NM
      SCP(I,J)=0.
    1 CONTINUE
      DO 51 I=1,NM
      K=NV(I)
      DO 100J=1,K
      RS(J)=0.
      DO 100M=1,K
      R(J,M)=0.
      RHO(J,M)=0.
      RSS(J,M)=0.
  100 CONTINUE
C
C       INPUT NOMINAL AND DEVIATION VALUES
C
      READ 53,(TM(J),TSD(J),HD(J),IRAND(J),J=1,K)
      PRINT 62
      PRINT 54,I,HI(I)
      DO 2 J=1,K
      M=IRAND(J)
      PRINT 55,J,HD(J),TM(J),TSD(J),A(1,M),A(2,M),A(3,M)
    2 CONTINUE
      J2=J1(I)
      IF(J1(I))5,5,3
    3 J2=J1(I)
C
C       INPUT CORRELATIONS
C
      READ 56,((RHO(N,M),M=N,J2),N=1,J2)
      PRINT 57
      DO 4 MM=2,J2
      M=MM-1
      PRINT 58,(RHO(N,MM),N=1,M)
```

```
    4 CONTINUE
C
C       TRANSFORM CORRELATION MATRIX
C
        CALL SQRM(RHO,J2,K)
    9   L=0
        PRINT 59,(HO(M),M=1,K),HI(I)
C
C       CHOOSE RANDOM DISTRIBUTION SUBROUTINE
C         AND CALCULATE PARAMETER VALUES
C
    5   L=L+1
        DO 16 J=1,K
        IR=IRAND(J)
        GO TO(7,8,9,10,11,12,13,14),IR
    7   CALL UNIFM(1)
        ARG = UR(1)
        GO TO 15
    8   CALL NORM(ARG)
        GO TO 15
    9   CALL LNORM(ARG)
        GO TO 15
   10   CALL EXPN(THETA,ARG)
        GO TO 15
   11   CALL WEIB(THETA,ALPHA,ARG)
        GO TO 15
   12   CALL GAMMA(THETA,LAMDA,ARG)
        GO TO 15
   13   CALL BETA(THETA,LAMDA,ARG)
        GO TO 15
   14   CALL CHISQ(NDF,ARG)
   15   RN(J)=ARG
   16   CONTINUE
        IF(J1(I))20,20,17
   17   DO 18J=1,J2
        D(J)=0.
        DO 18M=1,J
        D(J)=D(J)+RN(M)*R(M,J)
   18   CONTINUE
        DO 19 J=1,J2
        RN(J)=D(J)
   19   CONTINUE
C
C       CALCULATE INPUT CHECK
C
   20   DO 21 J=1,K
        RN(J)=TM(J)+RN(J)*TSD(J)
   21   CONTINUE
        DO 22 J=1,K
        RS(J)=RS(J)+RN(J)
        DO 22 M=1,K
        RSS(J,M)=RSS(J,M)+RN(J)*RN(M)
   22   CONTINUE
        DO 123 J=1,K
        X(J) = RN(J)
  123   CONTINUE
        CALL MODEL(    I,Y(L,I))
        PRINT 60,(RN(M),M=1,K),Y(L,I)
        LINE = LINE + (K+16)/8
         IF(LINE-44)310,300,300
  300   PRINT 320
        LINE = 0
  310   IF(LIM1-L)23,23,6
   23   CONTINUE
        LINE = 0
        DO 24 J=1,K
        RSS(J,J)=SQRT((RSS(J,J)-RS(J)*RS(J)/AN)/(AN-1.))
        RS(J)=RS(J)/AN
   24   CONTINUE
        PRINT 61
```

```
      PRINT 54,I,HI(I)
      DO 25 J=1,K
      M=IKAND(J)
      PRINT 55,J,HD(J),RS(J),RSS(J,J),A(1,M),A(2,M),A(3,M)
   25 CONTINUE
      IF(J2)31,31,26
   26 DO 28J=1,J2
      DO 28M=1,J2
      IF(J-M)27,28,27
   27 RSS(J,M)=((RSS(J,M)-RS(J)*RS(M)*AN)/(AN-1.))/(RSS(J,J)*RSS(M,M))
   28 CONTINUE
      DO 29 J=1,J2
      RSS(J,J)=1.
   29 CONTINUE
      PRINT 57
      DO 50 JJ=2,J2
      J=JJ-1
       PRINT 58,(RSS(JJ,M),M=1,J)
   50 CONTINUE
   31 CONTINUE
C
C       ARRANGE DEPENDENT DATA IN ASSENDING ORDER
C
      DO59N=1,NM
      KK=1
      B(1)=Y(1,N)
      DO 57 I=2,LIM1
      IF(B(KK)-Y(I,N))52,52,54
   52 B(I)=Y(I,N)
   53 KK=I
      GO TO 57
   54 DO 55 M=1,KK
      J=I-M
      IF(B(J)-Y(I,N))56,56,55
   55 B(J+1)=B(J)
      B(J)=Y(I,N)
      GO TO 58
   56 B(J+1)=Y(I,N)
      KK=I
   57 CONTINUE
      DO 58 I=1,LIM1
      Y(I,N)=B(I)
   58 CONTINUE
   59 CONTINUE
      PRINT 63,(HI(I),I=1,NM)
      DO 40 I=1,LIM1
      PER=FLOAT(I)/AN
      LINE=LINE+1
      IF(LINE-44)340,340,330
  330 PRINT 320
      LINE = 0
  340 PRINT 64,I,PER,(Y(I,N),N=1,NM)
   40 CONTINUE
      DO 42 N=1,LIM1
      DO 41 I=1,NM
      TY=Y(N,I)
      SY1(I)=SY1(I)+TY
      YT=TY*TY
      SY2(I)=SY2(I)+YT
      SY3(I)=SY3(I)+YT*TY
      SY4(I)=SY4(I)+YT*YT
      DO 41 J=1,NM
      SCP(I,J)=SCP(I,J)+Y(N,I)*Y(N,J)
   41 CONTINUE
   42 CONTINUE
C
C       CALCULATE DISTRIBUTION MOMENTS
C
      DO 43 I=1,NM
      AMU1(I)=SY1(I)/AN
```

```
      AMU2(I)=0.
      AMU3(I)=0.
      AMU4(I)=0.
      DO420N=1,LIM1
      YC=Y(N,I)-AMU1(I)
      YCSQ=YC*YC
      AMU2(I)=AMU2(I)+YCSQ
      AMU3(I)=AMU3(I)+YCSQ*YC
      AMU4(I)=AMU4(I)+YCSQ*YCSQ
  420 CONTINUE
      SIG(I)=SQRT(AMU2(I)/AN)
      GAM1(I)=AMU3(I)/(SIG(I)*AMU2(I))
      GAM2(I)=AMU4(I)/(AMU2(I)*AMU2(I))
      STD(I)=SQRT(AMU2(I)/(AN-1.))
  43 CONTINUE
      DO 44 I=1,NM
      DO 44 J=I,NM
      SCP(I,J)=(SCP(I,J)-AMU1(I)*AMU1(J)*AN)/(AN-1.)
  44 CONTINUE
      PRINT 65,(HI(I),I=1,NM)
      PRINT 66,(AMU1(I),I=1,NM)
      PRINT 67,(AMU2(I),I=1,NM)
      PRINT 68,(AMU3(I),I=1,NM)
      PRINT 69,(AMU4(I),I=1,NM)
      PRINT 70,(STD(I),I=1,NM)
      PRINT 71,(GAM1(I),I=1,NM)
      PRINT 72,(GAM2(I),I=1,NM)
      PRINT 73,NM
      DO 45 I=1,NM
      PRINT 74,HI(I),(SCP(I,J),J=1,NM)
  45 CONTINUE
      DO49I=1,NM
      Z(I,1)=AMU1(I)-3.*STD(I)
      DO146J=2,13
      Z(I,J)=Z(I,J-1)+0.5*STD(I)
 146 CONTINUE
C
C     CHOOSE SUBROUTINE TO FIT DISTRIBUTION OF MODEL
C
      IF(GAM1(I)-0.5)46,46,47
  46 CONTINUE
      CALL EDGE(I)
      LOP=1
      GO TO 48
  47 CONTINUE
      CALL LAGUR(I,AN,SY2(I),SY3(I),SY4(I))
      LOP=2
  48 PRINT 75,HI(I),(AH(LOP,J),J=1,3)
      PRINT 76,(Z(I,J),ELPH(I,J),J=1,13)
  49 CONTINUE
      PUNCH 98,XN
  50 FORMAT(I2,5A4)
  51 FORMAT(1115)
  52 FORMAT(20A4)
  53 FORMAT(2E10.4,A4,1X,I3)
  54 FORMAT (6H0MODEL,I3,2H, ,A4,10X,10HVAR. NAMES,5X,13HNOMINAL VALUE,
     15X,9HDEVIATION,5X,12HDISTRIBUTION)
  55 FORMAT(19X,I3,6X,A4,9X,E12.5,6X,E11.5,4X,3A4)
  56 FORMAT(16F5.0)
  57 FORMAT(19H0INPUT CORRELATIONS//)
  58 FORMAT(1H ,20F5.3)
  59 FORMAT(1H-,5X,8(5X,A4,3X)/3X,8(5X,A4,3X)/8(5X,A4,3X))
  60 FORMAT(1H0,5X,8E12.4/3X,8E12.4/8E12.4)
  61 FORMAT(12H-INPUT CHECK)
  62 FORMAT(1H-)
  63 FORMAT(41H-DEPENDENT DATA LISTED IN ASCENDING ORDER,//4H   I,
     15X,5HI/N  ,5(7X,A4,3X))
  64 FORMAT(I4,F10.3, 5E14.4)
  65 FORMAT(6H-MOMENTS/10X,5(7X,A4,4X))
  66 FORMAT(10H0    FIRST,5E15.6)
```

```
 67 FORMAT(10H0   SECOND,5E15.6)
 68 FORMAT(10H0    THIRD,5E15.6)
 69 FORMAT(10H0   FOURTH,5E15.6)
 70 FORMAT(10H0STD. DEV.,5E15.6)
 71 FORMAT(10H0 SKEWNESS,5E15.6)
 72 FORMAT(10H0 KURTOSIS,5E15.6)
 73 FORMAT(36H0VARIANCE - COVARIANCE MATRIX, ORDER,I2)
 74 FORMAT(1H0,3X,A4,2X,5E15.6)
 75 FORMAT(23H-PERCENTAGE POINTS FOR ,A4,4H BY ,3A4)
 76 FORMAT(5H0 Z =,F10.5,10H    F(Z) =,E13.5)
 85 FORMAT(F10.0)
320 FORMAT(1H-//)
     STOP
     END


C    SUBROUTINE FOR FUNCTIONAL FORM OF PERFORMANCE ATTRIBUTES
     SUBROUTINE MODEL(I,Y)
     COMMON DR,XN,LOOP,Z,GAM1,GAM2,AMU1,AMU2,SIG,ELPH,FLAG,X
     DIMENSION DR(2),Z(5,13),GAM1(5),GAM2(5),AMU1(5),AMU2(5),SIG(5),
    1ELPH(5,13),X(20)
     I=I
     Y=1.+2.*(X(1)+X(2))+3.*X(1)*X(2)+4.*(X(1)*X(1)+X(2)*X(2))
     RETURN
     END



     SUBROUTINE SQRM(RHO,N,R)
     DIMENSION RHO(20,20),R(20,20)
     DO 8 I=1,N
     DO 8 J=I,N
     KK=1
     P=RHO(I,J)
   1 IF(KK-I)2,3,3
   2 P=P-R(KK,J)*R(KK,I)
     KK=KK+1
     GO TO 1
   3 IF(J-I)8,4,7
   4 IF(P)5,6,6
   5 PRINT 10,I,J,R(I,J)
   6 R(I,J)=SQRT(P)
     GO TO 8
   7 R(I,J)=P/R(I,I)
   8 CONTINUE
     RETURN
  10 FORMAT(9H-ELEMENT 2I3,12HIS EQUAL TO ,E15.6)
     END



     SUBROUTINE UNIFM(N)
     DIMENSION DR(2),Z(5,13),GAM1(5),GAM2(5),AMU1(5),AMU2(5),SIG(5),
    1ELPH(5,13)
     COMMON DR,XN,LOOP,Z,GAM1,GAM2,AMU1,AMU2,SIG,ELPH,FLAG
     DO 1 I=1,N
     RC=33.*XN+101.
     XP=RC/2048.
     MU=XP
     UM=MU
     DR(I)=XP-UM
     XN=RC-UM*2048.
     IF(FLAG)1,1,2
   1 CONTINUE
     RETURN
   2 DR(1)=(DR(1)-0.5)*4.0
     FLAG=0.0
     RETURN
     END
```

```
      SUBROUTINE NORM(ONE)
      DIMENSION UR(2),Z(5,13),GAM1(5),GAM2(5),AMU1(5),AMU2(5),SIG(5),
     1ELPH(5,13)
      COMMON UR,NX,LOOP,Z,GAM1,GAM2,AMU1,AMU2,SIG,ELPH,FLAG
      IF(LOOP)1,1,2
    1 CALL UNIFM(2)
      GS=-2.*ALOG(UR(1))
      GS=SQRT(GS)
      H=6.283185*UR(2)
      ONE=GS*COS(H)
      TWO=GS*SIN(H)
      LOOP=1
      RETURN
    2 ONE=TWO
      LOOP=0
      RETURN
      END


      SUBROUTINE GAMMA(THETA,N,ARG)
      DIMENSION UR(2),Z(5,13),GAM1(5),GAM2(5),AMU1(5),AMU2(5),SIG(5),
     1ELPH(5,13)
      COMMON UR,XN,LOOP,Z,GAM1,GAM2,AMU1,AMU2,SIG,ELPH
      G=0.
      DO 1 I=1,N
      CALL UNIFM(1)
      G=G+ALOG(UR(1))
    1 CONTINUE
      ARG = -G*THETA
      RETURN
      END


      SUBROUTINE WEIB(THETA,ALPHA,ARG)
      DIMENSION UR(2),Z(5,13),GAM1(5),GAM2(5),AMU1(5),AMU2(5),SIG(5),
     1ELPH(5,13)
      COMMON UR,XN,LOOP,Z,GAM1,GAM2,AMU1,AMU2,SIG,ELPH
      CALL EXPN(THETA,ARG1)
      ARG = ARG1 * * (1./ALPHA)
      RETURN
      END


      SUBROUTINE EXPN (THETA,ARG)
      DIMENSION UR(2),Z(5,13),GAM1(5),GAM2(5),AMU1(5),AMU2(5),SIG(5),
     1ELPH(5,13)
      COMMON UR,XN,LOOP,Z,GAM1,GAM2,AMU1,AMU2,SIG,ELPH
      CALL UNIFM(1)
      ARG=-ALOG(UR(1))*THETA
      RETURN
      END


      SUBROUTINE LNORM(ARG)
      DIMENSION UR(2),Z(5,13),GAM1(5),GAM2(5),AMU1(5),AMU2(5),SIG(5),
     1ELPH(5,13)
      COMMON UR,XN,LOOP,Z,GAM1,GAM2,AMU1,AMU2,SIG,ELPH
      CALL NORM(ONE)
      ARG = EXP(ONE)
      RETURN
      END
```

```
      SUBROUTINE BETA(THETA,N,ARG)
      DIMENSION UR(2),Z(5,13),GAM1(5),GAM2(5),AMU1(5),AMU2(5),SIG(5),
     1ELPH(5,13)
      COMMON UR,XN,LOOP,Z,GAM1,GAM2,AMU1,AMU2,SIG,ELPH
      CALL GAMMA(THETA,N,ARG1)
      CALL GAMMA(THETA,N,ARG2)
      ARG = ARG1/(ARG1+ARG2)
      RETURN
      END


      SUBROUTINE CHISQ
      DIMENSION UR(2),Z(5,13),GAM1(5),GAM2(5),AMU1(5),AMU2(5),SIG(5),
     1ELPH(5,13)
      COMMON UR,XN,LOOP,Z,GAM1,GAM2,AMU1,AMU2,SIG,ELPH
      ARG=0.
      DO 1 I=1,N
      CALL NORM(ARG1)
      ARG = ARG + ARG1 * ARG1
    1 CONTINUE
      RETURN
      END


      SUBROUTINE EDGE(J)
      DIMENSION UR(2),Z(5,13),GAM1(5),GAM2(5),AMU1(5),AMU2(5),SIG(5),
     1ELPH(5,13)
      COMMON UR,NX,LOOP,Z,GAM1,GAM2,AMU1,AMU2,SIG,ELPH,FLAG
      Y1 = .14112821
      Y2 = .08864027
      Y3 = .02743349
      Y4 = .00039446
      Y5 = .00328975
      DO 3 I=1,13
      ZR = (Z(J,I)-AMU1(J))/SIG(J)
      Z2 = ZR * ZR
      Z3 = ZR * Z2
      ZP = ABS(ZR)/1.41422
      ZP2 = ZP * ZP
      ZP3 = ZP * ZP2
      DENOM = (1.+Y1*ZP+Y2*ZP2+Y3*ZP3+Y4*ZP2*ZP2+Y5*ZP2*ZP3)**8
      TERM1 = 0.5 * (1.-1./DENOM)
      TERM2 = 0.3989* EXP(-Z2*0.5)*((-GAM1(J)/6.)*(Z2-1.)
     1+(GAM2(J)-3.)/24.*(3.*ZR-Z3)+GAM1(J)*GAM1(J)
     2*(10.*Z3-Z2*Z3-15.*ZR)/72.)
      IF(ZR)1,1,2
    1 ELPH(J,I) = 0.5-TERM1+TERM2
      GO TO 3
    2 ELPH(J,I)= 0.5+TERM1+TERM2
    3 CONTINUE
      RETURN
      END


      SUBROUTINE LAGUR(J,AN,SY2,SY3,SY4)
      DIMENSION UR(2),Z(5,13),GAM1(5),GAM2(5),AMU1(5),AMU2(5),SIG(5),
     1ELPH(5,13)
      COMMON UR,NX,LOOP,Z,GAM1,GAM2,AMU1,AMU2,SIG,ELPH,FLAG
      ALP = AMU1(J)/AMU2(J)
      ALM = AMU1(J) * ALP
      LAMDA = ALM
      AMD = LAMDA
      TEST = 2.*(ALM-AMD)
      IF(TEST-1.)1,2,2
    1 IF(AMD)3,2,3
    2 AMD=AMD+1.
      LAMDA=LAMDA+1
```

```
3 LAM=LAMDA-1
  AL2=ALP*ALP
  DEN1=(AMD+1.)*(AMD+2.)
  DEN2=DEN1*(AMD+3.)
  DEN3=DEN2*AMD
  V2=SY2 / AN + AMU1(J)*AMU1(J)
  B1=(AMU1(J)*ALP-AMD)/AMD
  B2=(V2*AL2-2.*(AMD+1.)*AMU1(J)*ALP+AMD*(AMD+1.))/(2.*AMD*(AMD+1.
 1))
  B3=((SY3/AN)*ALP*AL2-3.*(AMD+2.)*V2*AL2+3.*DEN1*AMU1(J)
 1*ALP-AMD*DEN1)/(6.*AMD*DEN1)
  B4=((SY4/AN)*AL2*AL2-4.*(AMD+3.)*(SY3/AN)*ALP
 1*AL2+6.*(AMD+2.)*(AMD+3.)*V2*AL2-4.*DEN2*AMU1(J)
 2*ALP+DEN3)/(24.*DEN3)
  DO 8 I=1,13
  X=Z(I)*ALP
  IF(LAM)4,4,5
4 TERM1=-1.
  COE=1.
  GO TO 7
5 COE=AMD-1.
  TERM1=-X**LAM
  DO 6 K=1,LAM
  TERM = TERM1-COE*(X**(LAM-K))
  IF(K-LAM)6,7,7
  COE=COE*(AMD-(FLOAT(K)+1.))
6 CONTINUE
7 TERM2=-B1+B2*(-X+AMD+1.)+B3*(-X*X+2.*(AMD+2.)
 1*X-DEN1)+B4*  (-X**3   +3.*(AMD+3.)*X*X-3.*
 2(AMD+3.)*(AMD+2.)*X+DEN2)
  ELPH(J,I)=1.+EXP(-X)*(TERM1+(X**LAMDA)*TERM2)/COE
8 CONTINUE
  RETURN
  END
```

```
      PERFORMANCE VARIATION ANALYSIS - SENSITIVITY AND MOMENT ANALYSIS

      DIMENSION TSL(20),TSU(20),TL(20),TU(20)
      DIMENSION Y(20,10),RN(20)    ,TM(20,10),TSD(20,10),HD(20,10),SEN(20
     1)    ,ANON(20)    ,NR(10),HI(10),FPY(20)    ,SPY(20)    ,XL(20),XH(20)
      DIMENSION X(20),RHO(20,20),VC(20,20)
      DIMENSION TSLL(20),TSUU(20)
      COMMON X
C     INPUT INFORMATION
C        LIM2 . . . NUMBER OF MODELS
C        HI . . . . MODEL NAMES (ALPHANUMERIC)
C        NR . . . . NUMBER OF PARAMETERS IN EACH MODEL
C        TM . . . . PARAMETER NOMINAL VALUE
C        TSL  . . . PARAMETER DEVIATION VALUE
C        HD . . . . PARAMETER NAME (ALPHANUMERIC)
C        RHO  . . . PARAMETER CORRELATIONS
      READ 96,LIM2,(HI(J),J=1,LIM2)
      READ 97,(NR(I),I=1,LIM2)
      DO 110 J=1,LIM2
      K=NR(J)
      READ 98,(TM(I,J),TSD(I,J),HD(I,J),I=1,K)
  110 CONTINUE
      LIM2=LIM2
      NM=20
      DO 116 J=1,LIM2
      NM=NR(J)
      READ 99,((RHO(I,M),M=1,NM),I=1,NM)
      DO 112 I=1,NM
  112 RN(I)=TM(I,J)
      PRINT 70,HI(J)
      ENLU=1.
      ENLL=1.
      ENTL=1.
      ENTU=1.
      YIK=YIK
C           INCREMENT DATA POINTS
      DO 113 I=1, M
      RN(I)=RN(I)-3.*TSD(I,J)
      DO 113 K=1,5
      RN(I)=RN(I)+TSD(I,J)
      DO 28 IJ=1,NM
   28 X(IJ)=RN(IJ)
      CALL MODEL(J,YIK)
      Y(I,K)=YIK
  113 CONTINUE
      RN(I)=TM(I,J)
      FPY(I)=0.0
      SPY(I)=0.0
      IF(ISD(I,J))220,221,220
  220 CONTINUE
C           CALCULATE DERIVATIVES
      FPY(I)   =((Y(I,4)-Y(I,2))*2./3.-(Y(I,5)-Y(I,1))/12.)/TSD(I,J)
      SPY(I)   =(Y(I,4)-2.*Y(I,3)+Y(I,2)-(Y(I,5)-4.*Y(I,4)+5.*Y(I,3)-4.*
     1Y(I,2)+Y(I,1))/12.)/(TSD(I,J)*TSD(I,J))
  221 CONTINUE
C           CALCULATE SENSITIVITY
      SEN(I)    = FPY(I)  *TSD(I,J)*2./Y(I,3)
      ANON(I)   = SPY(I)  *TSD(I,J)*TSD(I,J)*2./Y(I,3)
      PRINT 94,HD(I,J),Y(I,1),Y(I,2),Y(I,4),Y(I,5),FPY(I)   ,SPY(I)   ,SEN
     1(I)   ,ANON(I)
      ENLU=ENLU+ABS(SEN(I))
      ENLL=ENLL-ABS(SEN(I))
      TSLL(I)=1.-SEN(I)
      TSUU(I)=1.+SEN(I)
      TSL(I)=1.-SEN(I)+ANON(I)
      TSU(I)=1.+SEN(I)+ANON(I)
      TL(I)=Y(I,1)/Y(I,3)
      TU(I)=Y(I,5)/Y(I,3)
      ENTU=ENTU+ABS (SEN(I))+ANON(I)
      ENTL=ENTL-ABS (SEN(I))+ANON(I)
  114 CONTINUE
```

```
C          CALCULATE STANDARD DEVIATION
      DO 130 I=1,NM
      DO 130 K=I,NM
      VC(I,K)=RHO(I,K)*TSD(I,J)*TSD(K,J)
      VC(K,I)=VC(I,K)
  130 CONTINUE
      STDY = 0.
      DO 131 I=1,NM
      DO 131 K=1,NM
      STDY = STDY+VC(I,K)*FPY(I)*FPY(K)
  131 CONTINUE
      STDY = SQRT (STDY)
      ENLU=ENLU*Y(1,3)
      ENLL=ENLL*Y(1,3)
      ENTL=ENTL*Y(1,3)
      ENTU=ENTU*Y(1,3)
      PRINT 71,Y(1,3)
      PRINT 75,STDY
C          WORST CASE LIMITS
      DO 117 I=1,NM
      IF(FPY(I))116,217,115
  115 XH(I)=RN(I)+2.*TSD(I,J)
      XL(I)=RN(I)-2.*TSD(I,J)
      GO TO 117
  116 XH(I)=RN(I)-2.*TSD(I,J)
      XL(I)=RN(I)+2.*TSD(I,J)
      GO TO 117
  217 XH(I)=RN(I)
      XL(I)=RN(I)
  117 CONTINUE
      XL(1)=XL(1)
      XH(1)=XH(1)
      DO 21 IJ=1,NM
   21 X(IJ)=XL(IJ)
      CALL MODEL(J,WCL)
      WCL=WCL
      DO 22 IJ=1,NM
   22 X(IJ)=XH(IJ)
      CALL MODEL(J,WCH)
      WCH=WCH
C                MAIN OUTPUT
   39 PRINT 72,(HD(I,J),XL(I),XH(I),TM(I,J),TSD(I,J),I=1,NM)
      PRINT 86
      PRINT 73,HI(J),WCL,WCH,Y(1,3)
      PRINT 79
      PRINT 73,HI(J),ENTL,ENTU
      PRINT 81
      PRINT 73,HI(J),ENLL,ENLU
      PRINT 76
      PRINT 74,(HD(I,J),TL(I),TSLL(I),TSL(I),TU(I),TSUU(I),TSU(I),I=1,NM
     1)
      STOP
  116 CONTINUE
   47 FORMAT(10I2)
   48 FORMAT(16F5.0)
   49 FORMAT(2E10.0,A4)
   50 FORMAT(I2,10A4)
   54 FORMAT(1H0,A4,8E12.5)
   70 FORMAT(54H-FIRST AND SECOND PARTIAL DERIVATIVES (Y' AND Y'') OF ,
     1A4,18H WITH RESPECT TO X/61X,8HPARTIALS,15X,11HSENSITIVITY/99H  X
     2     Y(X-2DX)     Y(X-1DX)     Y(X+1DX)     Y(X+2DX)      Y'
     3''          LINEAR       NON-LIN)
   71 FORMAT(  25H0ALL X AT NOMINAL, Y(X) =E13.5)
   72 FORMAT(18H-WORST CASE LIMITS/55H VALUE OF VARIABLE AT LOWER LIMIT
     1 AND AT UPPER LIMIT ,18X,1HX,15X,2HDX/(6X,A4,E24.5,E20.5,E24.5,E17
     2.5))
   73 FORMAT(6X,A4,F24.5,E20.5,E24.5,F17.5)
   74 FORMAT(4X,A4,2X,3E15.5,2X,3E15.5)
   75 FORMAT(17H0STD DEV OF Y(X),E14.5)
   76 FORMAT(57H0GOODNESS OF FIT USING 1ST AND 2ND TERMS OF TAYLOR SERIE
```

```
     1S/10H VARIABLES,4X,13HY(X-2DX)/Y(X),4X,7H1.-SENS,4X,15H1.-SENS+NON
     2 LIN,4X,13HY(X+2DX)/Y(X),4X,7H1.+SENS,4X,15H1.+SENS+NON LIN)
   79 FORMAT(66H0INTERACTION CHECK USING 1ST AND 2ND DEGREE TERMS OF TAY
     1LOR SERIES)
   80 FORMAT(36H0WORST CASE LIMITS AND NOMINAL VALUE)
   81 FORMAT(58H INTERACTION CHECK USING 1ST DEGREE TERMS OF TAYLOR SERI
     1ES)
      END


C     SUBROUTINE FOR FUNCTIONAL FORM OF PERFORMANCE ATTRIBUTES
      SUBROUTINE MODEL(I,Y)
      DIMENSION X(20)
      COMMON X
      I=1
      Y=1.+2.*(X(1)+X(2))+3.*X(1)*X(2)+4.*(X(1)*X(1)+X(2)*X(2))
      RETURN
      END
```

```
    4 CONTINUE
      DO 15 I=1,NZ
      DO 15 K=N1,NVT
      IF(X(I,K))10,10,11
   10 Y(I,K)=X(Z,K)
      GO TO 15
   11 Y(I,K)=X(1,K)
   15 CONTINUE
      PRINT 50,HY
      PRINT 54,    (H1(J),I(J),DZ(J),J=1,NV)
      PRINT 55
      DO 21 I=1,NZ
   21 PRINT51,I,(Y(I,J),J=1,NVT)
      PRINT 52,(HH(J),J=1,NVT),HY
      DO 23 I=1,NZ
      DO 23 J=1,NVT
      XX=DD(J)
   23 Z(XX)=Y(I,J)
      CALL MODEL(IJK,N(1))
      PRINT 53,I,(Y(I,J),J=1,NVT),Q(I)
   24 CONTINUE
      DO 27 I=1,NZ
      DO 27 J=1,NVT
   27 Y(I,J)=Y(I,J)-XX(J)
      PRINT 199
      II=0
      K=0,J
      DO 100 I=1, 2
  100 K=K+J(I)
      NZ2=NZ
      K=K/NZ2
      PRINT 200,II,K
      DO 101 J=1,NVT
      SUM=0.0
      SUR=0.0
      DO 102 I=1,NZ
      SUM=SUM+Y(I,J)*Q(I)
  102 SUR=SUR+Y(I,J)*Y(I,J)
      B=SUM/SUR
      SEN=B*DX(J)/YNOM
      PRINT 201,HH(J),J,B,SEN
  101 CONTINUE
      NVM1=NVT-1
      DO 103 J=1,NVM1
      JP1=J+1
      DO 103 K=JP1,NVT
      SUM=0.0
      SS2=0.0
      DO 105 I=1,NZ
      SUM=SUM+Y(I,J)*Y(I,K)*Q(I)
  105 SS2=SS2+Y(I,J)*Y(I,J)*Y(I,K)*Y(I,K)
      B=SUM/SS2
      SEN=B*DX(J)*DX(K)/(2.0*YNOM)
      PRINT 202,HH(J),HH(K),J,K,B,SEN
  103 CONTINUE
      STOP
    9 FORMAT(I2,A4)
   12 FORMAT(2E10.0,A5)
   50 FORMAT(2012)
   50 FORMAT(26H-INTERACTION ANALYSIS FOR ,A4,//,9H VARIABLE,4X,13HNOMIN
     1AL VALUE,7X,2HDX,//)
   51 FORMAT(I3,2X,2015)
   52 FORMAT(1H-/59H ACTUAL LEVELS OF X(I) AND CORRESPONDING PERFORMANCE
     1 VALUES/4H0ROW,9(9X,A4))
   55 FORMAT(1H-/35H CODED LEVELS OF THE VARIABLES X(I)/35H     0-LOW LE
     1VEL      1-HIGH LEVEL  /4HOROW,12X,24HMOD-2 ARRAY OF VARIABLES/)
  199 FORMAT(1H-/50H COEFFICIENTS OF VARIABLES AND THEIR SENSITIVITIES//
     14HX,12HCOEFFICIENTS,5X,11HSENSITIVITY/)
  200 FORMAT(10X,8HCONSTANT,10X,2HB(,I3,3H) =E14.5)
  201 FORMAT(13X,A4,11X,2HB(,I3,3H) =E14.5,E16.5)
```

```
      PERFORMANCE VARIATION ANALYSIS - INTERACTION ANALYSIS

      DIMENSION Z(20),DZ(20),HI(20),JU(15),HH(15),XX(15),DX(15),X(2,15),
     1KK(15,15),MS(15),M(64,15),Y(64,15)
      DIMENSION Q(64)
      COMMON Z,NV
C****
C**** DESCRIPTION OF INPUTS  **************
C* 1 NMODL=NUMBER OF MODELS.
C* 2 NV=TOTAL NUMBER OF VARIABLES.
C* 3 HY=DESIRED NAME OF DEPENDENT VARIABLE.
C* 4 Z(I)=I-TH INDEPENDENT VARIABLE.
C* 5 DZ(I)=STEP SIZE OF I-TH VARIABLE
C* 6 HI(I)=NAME OF I-TH VARIABLE.
C* 7 NVT=NUMBER OF VARIABLES TO BE USED IN INTERACTION ANALYSIS.
C* 8 NVU=NUMBER OF VARIABLES TO BE COMPUTED ORIGINALLY, THAT IS, THE
C         NUMBER OF RUNS TO APPEAR IN THE MATRIX IS 2**NVU.
C* 9 JU IS A VECTOR INDICATING  THE  VARIABLES SELECTED FOR
C         INTERACTION CHECK.  JU SHOULD HAVE NVT ELEMENTS.
C* 10 KK IS AN ARRAY HAVING (NVT-NVU) ROWS AND NVU COLUMNS.  EACH
C         ROW (CARD) INDICATES, BY SUBSCRIPTS AND EITHER A ZERO OR ONE
C         FOR MS(K), THE FORMULA FOR OBTAINING VALUES OF VARIABLES
C         NOT COMPUTED DIRECTLY.
C****
      READ 40,NMODL
      DO 60 IJK=1,NMODL
      READ 9,NV,HY
      READ 12,(Z(J),DZ(J),HI(J),J=1,NV)
      CALL MODEL(IJK,YNUM)
      READ 40,NVT,NVU
      READ 40,(JU(J),J=1,NVT)
      DO 61 K=1,NVT
      MM=JU(K)
      HH(K)=HI(MM)
      XX(K)=Z(MM)
      DX(K)=2.*DZ(MM)
      X(1,K)=XX(K)+DX(K)
   61 X(2,K)=XX(K)-DX(K)
      N2=NVU+1
      IF(NVU-NVT)42,43,43
   42 DO 1 K=N1,NVT
    1 READ 40,(KK(J,K),J=1,NVU),MS(K)
   43 N2=2**NVU
      DO 6 J=1,NVU
      NBL=2**(J-1)
      N=N2/(NBL*2)
      JK=0
      IK=1-N
      DO 5 K=1,NBL
      IK=IK+N
      JK=JK+N
      DO 5 I=IK,JK
      M(I,J)=0
    5 Y(I,J)=X(2,J)
      IK=IK+N
      JK=JK+N
      DO 6 I=IK,JK
      M(I,J)=1
    6 Y(I,J)=X(1,J)
      IF(NVU-NVT)45,46,46
   45 DO 4 K=N1,NVT
      DO 4 I=1,N2
      NS=MS(K)
      DO 7 J=1,NVU
      IF(KK(J,K))7,7,8
    8 L=KK(J,K)
      NS=NS+M(I,L)
    7 CONTINUE
      NS=MOD(NS,2)
      M(I,K)=NS
```

```
 203 FORMAT(I3,9E13.5)
 204 FORMAT(2X,A4,5X,2E13.5)
 212 FORMAT(7X,A4,2H, ,A4,7X,2HBB(,I3,1H,I3,3H) =,2E10.5)
     END

C    SUBROUTINE FOR FUNCTIONAL FORM OF PERFORMANCE ATTRIBUTES
     SUBROUTINE MODEL(I,Y)
     COMMON Z,NV
     DIMENSION Z(20),X(20)
     DO 1 I=1,NV
     X(I)=Z(I)
   1 CONTINUE
     Y=1.+2.*(X(1)+X(2))+3.*X(1)*X(2)+4.*(X(1)*X(1)+X(2)*X(2))
     RETURN
     END
```