https://ntrs.nasa.gov/search.jsp?R=19670023296 2020-03-12T11:15:40+00:00Z

31

NI

NASA CR-66381

CONCEPTUAL MECHANIZATION STUDIES FOR A HORIZON DEFINITION SPACECRAFT COMMUNICATIONS AND DATA HANDLING SUBSYSTEM

Horizon Definition Study

Distribution of this report is provided in the interest of information exchange. Responsibility for the contents resides in the author or organization that prepared it.

GPO PRICE $ _____

CFSTI PRICE(S) $ _____

Hard copy (HC) 3.00

Microfiche (MF) .65

ff 653 July 65

May 1967

N67-32625 (ACCESSION NUMBER)
(THRU)
209 (PAGES)
1 (CODE)
CR-66381 (NASA CR OR TMX OR AD NUMBER)
07 (CATEGORY)
FACILITY FORM 602

Prepared under Contract No. NAS 1-6010 by

HONEYWELL INC.
Systems & Research Division
Minneapolis, Minn.

for

NATIONAL AERONAUTICS AND SPACE ADMINISTRATION

NASA CR-66381

CONCEPTUAL MECHANIZATION STUDIES FOR A HORIZON DEFINITION SPACECRAFT COMMUNICATIONS AND DATA HANDLING SUBSYSTEM

By Raymond J. Kirk
Joseph Kahnke
David J. Hartman

HORIZON DEFINITION STUDY

Distribution of this report is provided in the interest of information exchange. Responsibility for contents resides in the author or organization that prepared it.

May 1967

Prepared under Contract No. NAS 1-6010 by
Honeywell Inc.
Systems and Research Division
Minneapolis, Minnesota

for

NATIONAL AERONAUTICS AND SPACE ADMINISTRATION

PRECEDING PAGE BLANK NOT FILMED.

FOREWORD

This report documents Phase A, Part II of An Analytical and Conceptual Design Study for an Earth Coverage Infrared Horizon Definition Study performed under National Aeronautics and Space Administration Contract NAS 1-6010 for Langley Research Center

The Horizon Definition Study was performed in two parts. Part I, which was previously documented, provided for delineation of the experimental data required to define the infrared horizon on a global basis for all temporal and spatial periods. Once defined, the capabilities of a number of flight techniques to collect the experimental data were evaluated.

The Part II portion of the study provides a measurement program plan which satisfies the data requirements established in the Part I study. Design requirements and the conceptual design for feasibility of the flight payload and associated subsystems to implement the required data collection task are established and documented within this study effort.

Honeywell Inc., Systems and Research Division, performed this study program under the technical direction of Mr. L. G. Larson. The program was conducted from 28 March 1966 to 10 October 1966 (Part I) and from 10 October 1966 to 29 May 1967 (Part II). Technical consultation and review on this Part II portion was provided by Messrs. A. Reickord, S. Durrani, R. Curry, and L. Golden of Radio Corporation of America (RCA), Astro-Electronics Div.

Gratitude is extended to NASA Langley Research Center for their technical guidance, under the program technical direction of Messrs. L. S. Keafer and J. A. Dodgen with direct assistance from Messrs. W. C. Dixon, Jr., E. C. Foudriat, H. J. Curfman, Jr., and L. Taylor, as well as many people within their organization.

PRECEDING PAGE BLANK NOT FILMED.

PRECEDING PAGE BLANK NOT FILMED.
PRECEDING PAGE BLANK NOT FILMED.

CONTENTS

PRECEDING PAGE BLANK NOT FILMED.

PRECEDING PAGE BLANK NOT FILMED.

ILLUSTRATIONS

PRECEDING PAGE BLANK NOT FILMED.

PRECEDING PAGE BLANK NOT FILMED.

TABLES

PRECEDING PAGE BLANK NOT FILMED.

CONCEPTUAL MECHANIZATION STUDIES FOR A HORIZON DEFINITION SPACECRAFT COMMUNICATIONS AND DATA HANDLING SUBSYSTEM

By Raymond J. Kirk
Joseph Kahnke
David J. Hartman

SUMMARY

Delineation of an effective earth horizon definition measurement program demands an extensive analytical and conceptual design. Part I of the study provided for definition of the experimental data required to map temporally and spatially the infrared horizon. The study presently being documented, Part II, provides a measurement program plan and system concept to satisfy the data requirements established in the Part I study.

This report documents the data handling and communication subsystems design requirements and develops a feasible subsystem concept. The trade-off studies are documented to show the logic used to arrive at the recommended concept.

The data handling subsystem in its present concept is a completely solid-state system, well within the state of the art. All scientific data on the spacecraft is digitized, stored in a 515 455 bit solid-state memory, and transmitted to telemetry stations approximately once per orbit. The concept provides the capability of meeting the recommended data requirements of 378 508 horizon profiles in one year and has flexibility to take additional data in "interesting" locations.

The communications subsystem requires telemetry transmission in the 136 MHz vhf band to achieve maximum station contact and S-band transponder operation for vehicle tracking to achieve the required tracking accuracy. Including the capability of connecting these units into redundant and/or back-up modes of operation provides a highly reliable communications subsystem. The subsystem is feasible, within the state of the art, and requires no alterations to the NASA Spacecraft Tracking and Data Acquisition Network (STADAN).

INTRODUCTION

The data handling and communications conceptual mechanization studies documented herein are a portion of the Horizon Definition Study (HDS) conducted for NASA Langley Research Center, Contract NAS 1-6010, Part II. The purpose of the Horizon Definition Study is to develop a complete horizon radiance profile measurement program to provide data which can be used to determine the earth's atmospheric state, especially at high altitudes. These data can then be effectively used in many atmospheric science studies and in the design of instruments and measurement systems which use the earth's horizon as a reference.

Part I of the HDS resulted in the following significant contributions to the definition of the earth's radiance in the infrared spectrum:

- The accumulation of a significant body of meteorological data covering a major portion of the Northern Hemisphere.
- Computation of a large body of synthesized horizon radiance profiles from actual temperature profiles obtained by rocket soundings.
- Generation of a very accurate analytical model and computer program for converting the temperature profiles to infrared horizon profiles (as a function of altitude).
- An initial definition of the quantity, quality, and sampling methodology required to define the earth's infrared horizon in CO_2 absorption band for all temporal and spatial conditions.
- An evaluation of the cost and mission success probabilities of a series of flight techniques which could be used to gather the radiance data. A rolling-wheel spacecraft was selected in a nominal 500-km polar orbit.

The Part II study effort was directed toward the development of a conceptually feasible measurement system, which includes a spacecraft to accomplish the measurement program developed in Part I. In the Part II HDS, a number of scientific and engineering disciplines were exercised simultaneously to design conceptually the required system. Accomplishments of Part II of the study are listed below:

- The scientific experimenter refined the sampling methodology used by the measurement system. This portion of the study recommends the accumulation of approximately 380 00 radiance profiles taken with a sampling rate that varies with the spacecraft's latitudinal position.

- A conceptual design was defined for a radiometer capable of resolving the earth's radiance in the 15-micron spectrum to 0.01 watt/meter^2 -steradian with an upper level of response to 7.0 watt/meter^2 -steradian.

- A starmapper and attitude determination technique were defined capable of determining the pointing direction of the spacecraft radiometer to an accuracy of 0.25 km in tangent height at the earth's horizon.

  The combination of the radiometer and starmapper instruments is defined as the mission experiment package.

- A solar cell-battery electrical power subsystem conceptual design was defined which is completely compatible with the orbital and experiment constraints. This system is capable of delivering 70 watts of continuous electrical power for one year in the sun-synchronous, 3 o'clock nodal crossing, 500 km orbit.

- A data handling subsystem conceputal design was defined which is capable of processing in digital form all scientific and status data from the spacecraft. This subsystem is completely solid state and is designed to store the 515 455 bits of digital information obtained in one orbit of the earth. This subsystem also includes command verification and execute logic.

- A communications subsystem conceptual design was defined to interface between the data handling system of the spacecraft and the STADAN. The 136 MHz band is used for primary data transmission, and S band is used for the range and range-rate transponder.

- A spacecraft structural concept was evolved to contain, align, and protect the spaceborne subsystems within their prescribed environmental constraints. The spacecraft is compatible with the Thor-Delta launch vehicle.

- An open-loop, ground-commanded attitude control subsystem conceptual design was defined utilizing primarily magnetic torquing which interacts with the earth's field as the force for correcting attitude and spin rates.

- The Thor-Delta booster, which provides low cost and adequate capability, was selected from the 1972 NASA "stable ".

- Western Test Range was selected as the launch site due to polar orbit requirements. This site has adequate facilities, except for minor modifications, and is compatible with the polar orbital requirements.

This report contains documentation of the areas of study directly related to the conceptual design of the data handling and communications subsystems on the vehicle. The objectives of these studies are

1. To determine the design requirements of all on-board programming, timing, data collection, processing, and storage and develop a feasible concept realizing the program objectives.

2. To define the design requirements for the on-board tracking and data transmission equipment and develop a feasible concept realizing the program objectives and achieving compatibility with the existing Satellite Tracking And Data Acquisition Network (STADAN).

The detailed studies performed to meet these objectives are presented in two major sections of this report corresponding to the data handling subsystem and the communications subsystem.

STUDY REQUIREMENTS AND OBJECTIVES

Basic system requirements are those defined by the original statement of work, Phase A Part I results, and NASA instructions.

The following list itemizes the primary requirements of the Horizon Definition Study. Secondary requirements are discussed separately for the data handling and communications subsystems.

Radiance Profile Measurements

- Spectral interval: 615 to 715 cm^{-1} (14.0 to 16.28μ)
- Profile accuracy
  - ► Tangent height range: +80 km to -30 km
  - ► Instantaneous value of radiance measured must be assignable to a tangent height value to within ±0.25 km.
  - ► Radiance characteristics and resolution:

    Maximum peak radiance = 7.0 W/m^2 - sr.

    Minimum peak radiance = 3.0 W/m^2 - sr.

    Maximum slope = 0.6 W/m^2 - sr - km.

    Minimum slope = 0.02 W/m^2 - sr - km.

    Maximum slope change = 0.15 W/m^2 - sr - km^2.

    Radiance magnitude resolution = 0.01 W/m^2 - sr.
  - ► Horizontal resolution: 25 km
- Data requirements - Data requirements for the Horizon Definition Study (HDS) experiment, as refined during the study, are as follows:

<u>Minimum requirements.</u> --

- ► One-year continuous coverage
- ► "Uniform" time sampling in each space cell over each time cell, i.e., no more than two samples/space cell/day
- ► 13 time cells (28 days/cell)

- 408 space cells

Latitude (60°S to 60° N)	320
Latitude (60° N to 90° N)	44
Latitude (60° S to 90°S	44

- Samples per cell

Latitude (0° to 60°)	16
Latitude (60° to 90°)	38

- Total samples (one year) 110 032

<u>Recommended requirements.</u> --

- One-year continuous coverage
- Maximum of 10° latitude separation between successive samples
- 13 time cells (28 days/cell)
- 588 space cells:

Latitude (30°S to 30°N)	128
Latitude (30°N to 60°N)	134
Latitude (60°N to 82.6°N)	96
Latitude (30°S to 60°S)	134
Latitude (60°S to 82.6°S)	96

- Average number of samples per cell:

Latitude (30°S to 30°N)	45
Latitude (30°N to 60°N)	39
Latitude (60°N to 82.6°N)	67
Latitude (30°S to 60°S)	39
Latitude (60°S to 82.6°S)	67

- Total samples (one year) 378 508

Mission Profile

Nominal circular, polar orbit of approximately 500 km altitude.

Tracking and Data Acquisition

Limited to the existing Satellite Tracking and Data Acquisition Network (STADAN) with minimum modification.

Experiment Package

- Passive radiometric and attitude measurements with redundancy (more than one unit) in the experiment package for the radiometer and attitude determination device.
- Minimum scan rate >0. 5 scans/min average.
- Maximum scan angle with respect to orbit plane ≤5°.

Spacecraft

- Rolling-wheel configuration (spin axis normal to the orbit plane).
- Weight in less than 800 pound class mandatory.

State of the Art

Proven subsystems shall be employed wherever possible.

Mission Effectiveness/Reliability

Reliability shall be approached on the basis of "designing in" successful performance of the one-year, data-collection mission, i. e., the effort is to be biased strongly toward mission effectiveness. Consequently, the mission effectiveness/reliability effort should involve continuing tradeoffs in each subfunction area against the criteria of maximum effectiveness. A numerical estimate of the probable system MTBF shall be made on the final configured system.

Strong consideration should be given to the use of reserve spacecraft as a "backup" means rather than as a continuously ready standby. Specifically, the "backup" concept (as opposed to ready continuously) is of more significance on the Thor-Delta sized vehicle than on a Scout vehicle.

DATA HANDLING SUBSYSTEM

SUBSYSTEM REQUIREMENTS

The basic mission requirements have been defined previously. This section itemizes the key basic mission and system requirements applying to each unit of the data handling subsystem and lists the resulting key requirements on that unit.

Receive and Process Ground Commands

- System requirements
  - A command reception system is required on the spacecraft to provide ground control of transmission, mode switching, and sequencing.
  - The subsystem must be compatible with STADAN.
- Subsystem requirements
  - Primary commanding shall be through vhf with backup capability through S band.
  - The command reception unit shall be compatible with the STADAN tone digital command system (maximum of 70 discrete commands).
  - A total of 58 commands are required to meet the present system concept.

System Sequencing

- System requirement
  - Sequences of commands must be generated for performance of functions occurring in orbit positions remote from ground stations.
- Subsystem requirements
  - Attitude error correction torquing sequence
  - Spin-rate correction sequence
  - Variable-profile sampling-rate sequence
  - Starmapper - sun sensor data collection sequence
  - Radiometer sun-moon interference data collection sequence

Mode Switching

- System requirement
  - A capability shall be provided for receipt of ground commands to select redundant or alternate modes of operation in event of failure.
- Subsystem requirement
  - Starmapper - sun sensor redundancy selection
  - Radiometer redundancy selection
  - Telemetry vhf or S-band mode of transmission
  - Attitude control system redundancy selection
  - Power system alternate modes selection

Spaceborne Time Reference

- System requirements
  - Data processing errors due to relative time stability and resolution between radiometric and attitude determination measurements shall be not more than ±0.035 km tangent height (± 3 arc sec angular error).
  - Errors due to correlation of spacecraft relative time with ground real time shall be not more than ±0.035 km tangent height.

► Subsystem requirements

- Based on a vehicle spin rate of three rpm, the minimum time resolution shall be not less than 26.7 μsec.
- The time reference shall not drift more than 26.7 μsec per 60 sec.
- The spacecraft time reference shall be transmitted at each station data acquisition contact and be recorded at the station to a real time accuracy of ± 7.7 m sec.

Process Spacecraft Data

► System requirement

- Data from the various experimental and spacecraft status sources must be collected, digitized, and processed for storage.

Radiometer data processing.

► System requirements

- Profile range: + 80 to -30 km
- Tangent height resolution: 1/4 km
- Radiance range: 0.01 to 7.0 W/m^2- sr
- Radiance magnitude resolution: 0.01 W/m^2- sr
- Maximum slope resolution: 0.6 W/m^2- sr - km
- Minimum set of data requirements: 110 032 profiles/yr
- Recommended set of data requirements: 378 508 profiles/yr

► Subsystem requirements

- A/D converter requirements

  10-bit binary output

  Minimum sampling rate, 3.15 kHz

  Minimum counting rate, 47.25 kHz

  Nominal 550 samples per profile

  Minimum of 20 profiles per orbit

- 26 calibration readings required per profile

- Total data output per orbit
  Minimum requirement, 116 200 bits
  Recommended requirement, 395 080 bits

Starmapper-sun sensor data processing.

► System requirements

- Record time intervals and slit transit times of six stars per revolution for satellite dark period to time accuracy of ± 26.7 μsec.
- Record time intervals of sun sensings each revolution for satellite light period to time accuracy of ± 26.7 μsec.

► Subsystem requirements

- Total data output per orbit

  Starmapper, 43 710 bits

  Sun sensor, 16 920 bits

Spacecraft status data processing.

► System requirements

- Critical status data shall be recorded on the vehicle once per recorded profile.
- Noncritical status data will be transmitted directly to STADAN stations.

► Subsystem requirement

- Total recorded data per orbit, 16 320 bits.

Storage System

► System requirement

- Basic requirements specify global data coverage and compatibility with STADAN.

► Subsystem requirements

- Capability for storage of up to one orbit of data (94 min) is required.

  Minimum requirement, 210 533 bits

  Recommended requirement, 515 455 bits

- The memory shall accept, label, and store data from the radiometer, starmapper, sun sensor, and status data sources.
- Maximum data input rate is 32 kbits/sec
- Maximum data output rate is 4 kbits/sec

Output Labeling and Formatting

► System requirements

- Telemetry outputs shall be organized into standard data frames.
- Synchronizing words shall be added to each frame.
- Parity bits shall be added to each word.

SUBSYSTEM CONCEPT

Key Features and Elements

A general function block diagram of the data handling subsystem is shown in Figure 1. The subsystem consists of a ground command processing unit, a system time reference, programming and control logic, data processing for the sensors, a data storage unit, and an output formatting unit.

The data handling subsystem, in its present concept, is a completely solid-state system, well within the state of the art. All scientific data on the spacecraft is digitized, stored in a solid-state memory, and transmitted to telemetry stations approximately once per orbit. Noncritical spacecraft status data is digitized and telemetered in real time.

The basic mission data requirements and the STADAN compatibility requirement were the primary factors in determining the data handling system size and organization. The primary mission goal is to perform a one-year global mapping of the earth's CO_2 horizon by recording 378 508 horizon profiles at appropriate spatial and temporal points. Ten STADAN stations can be used for reception of telemetry data. These constraints reduce to data handling requirements for data collection and storage of 515 455 bits per orbit and transmissions once per orbit continuously for the year. Flexibility is included in the concept wherever it does not degrade the primary mission goal. For example, where more than one station can be contacted in an orbit to unload the memory, profiles can be taken at high rates over interesting locations.

The command processing unit is compatible with the STADAN Tone Digital Command System (available at all stations with capacity of 70 commands).

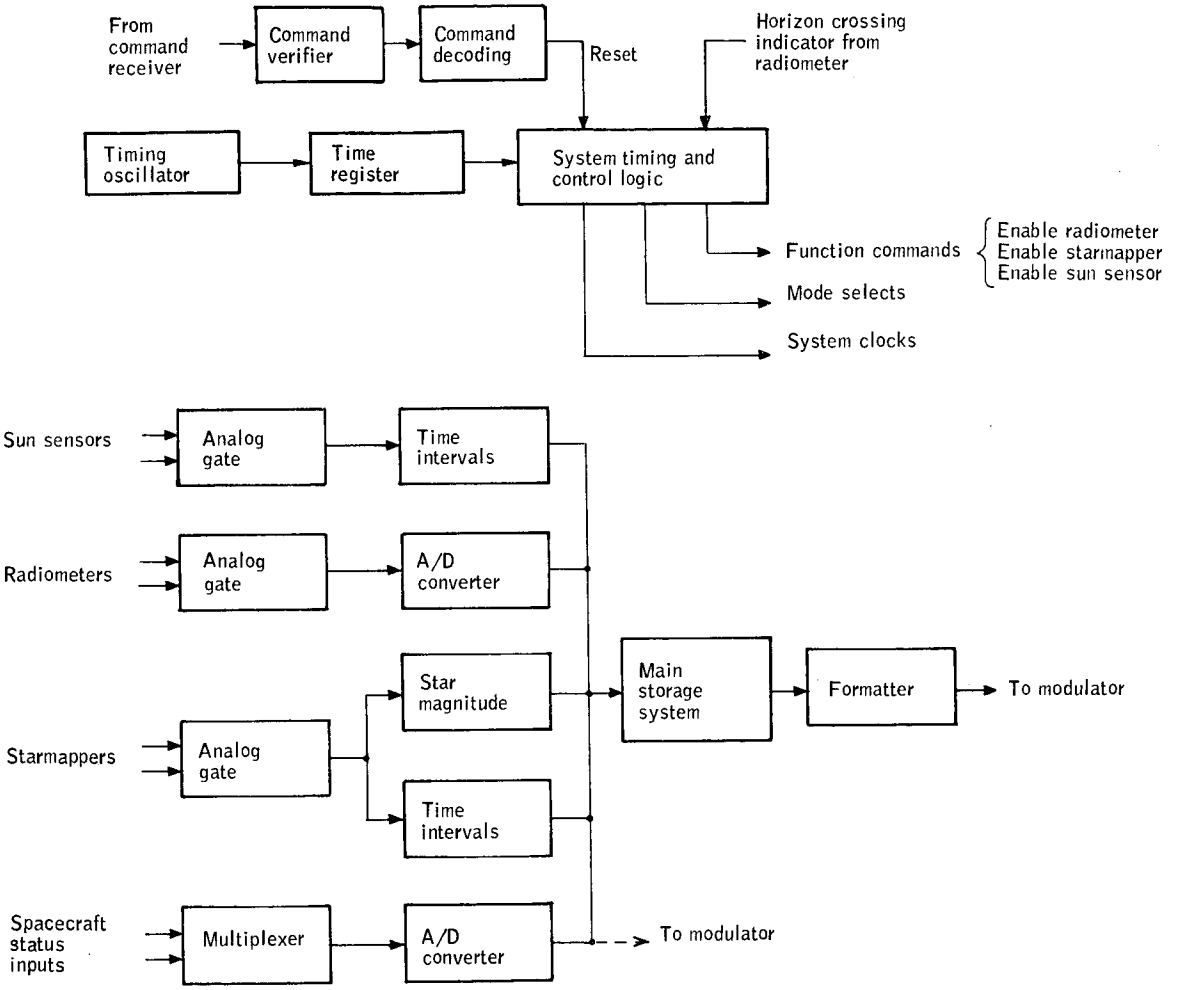

Figure 1. Data Handling Subsystem Block Diagram

Commands are verified to be legitimate on reception, and a reception or response indication is transmitted back to the ground. A total of 58 ground commands are required for system operation.

Precision time labeling on the vehicle is required for correlation of radiance samples and attitude data. In addition, the on-board time will be transmitted to the ground telemetry stations where its drift can be measured, eliminating the need for resetting or correcting the spacecraft time reference.

Sequences will be generated in the programming unit to control vehicle functions at locations remote from ground stations. Among the required sequences are magnetic torquing control for attitude error correction and spin rate correction, variable profile sampling rates as a function of latitude, and starmapper - sun sensor operation control.

Data sources on the vehicle are the radiometers, starmappers, sun sensors, and multiple status test points. All data is processed from the analog sensor outputs to binary digital form to achieve feasible data bandwidths and to eliminate data accuracy degradation due to the transmission link.

A ferrite-core memory system of 515 455 bits in size is recommended for the system. A solid-state memory is selected to eliminate the spacecraft momentum disturbances and buffer storage problems associated with magnetic tapes and to provide a high reliability system with no wear-out factors. Ferrite core is recommended for the memory element over other solid-state systems under development because of its flight proven feasibility and minimum development time.

Output formatting will be achieved directly in the memory system organization. Formatting, to be compatible with STADAN, requires addition of parity error checking, synchronization words, and standard framing of the output data. Including this in the memory organization provides error testing of the memory system as well as the transmission link.

Physical Characteristics

Table 1 shows a chart of size, weight, and power estimates for the data handling subsystem. The size is listed as 1460 cu in., weight 54 lbs, and power 21.3 watts. All of the numbers are conservative and do include space for approximately 80 percent redundancy.

The size and weight of the unit could be significantly reduced by using high-density packaging techniques if indicated by the system requirements. At present, size and weight constraints are not critical. Using a relatively loose packaging has advantages in reliability, construction, testing, and thermal design.

TABLE 1. - DATA HANDLING SYSTEM ESTIMATES

Subsystem	Size, cu in.	Weight, lbs	Power, watts
Command verifier and decoder	100	4	1.0
Timing oscillator and regulator	90	3	0.9
Programmer	90	4	2.0
Radiometer data collection	80	4	3.0
Starmapper-sun sensor data collection	80	4	4.0
Status multiplexer and A/D conversion	120	5	5.7
Memory system	900	30	4.7
Totals	1460	54	21.3

The power estimate is conservative since it is based on the primary use of medium power integrated circuits in the data handling unit. The use of low power integrated circuits, wherever slower switching speeds can be tolerated, should reduce the power requirement considerably.

Because of the tight thermal control requirements on other subsystems in the vehicle, the data handling subsystem will be in a very mild thermal environment. The present estimated thermal environment will be 25°C ±10°C. The data handling system, without special design emphasis, should operate over the range of 0°C to 60°C. This effective derating should enhance the subsystem reliability.

DATA STORAGE TRADEOFF STUDIES

Direct Transmission versus Storage

To begin development of the spacecraft data handling system concept, it is necessary to compare ground telemetry station availability with the basic data requirements to show that data storage capability is required on the vehicle.

The basic data requirements specify complete global profile sampling of the earth's horizon with roughly uniform spatial and temporal sampling rates over a one-year time period. To meet the profile tangent height resolution requirements with a feasible radiometer, a relatively low altitude orbit (nominally 500 km) is necessary. Global coverage dictates an essentially continuous data sampling over the complete surface of the earth, and the low altitude, near polar orbit reduces contact time with the existing STADAN stations.

A map displaying the maximum area of data collection for a spacecraft with only direct transmission capability in a 500 km circular orbit is shown in Figure 2. The stations shown are only those of the STADAN with capability for command and reception in the 136 MHz vhf band. The area covered is based on the assumption that the satellite can be at maximum line-of-sight distance with the radiometer scanning the opposite horizon from the ground station. This assumption implies the spacecraft has the capability to take profiles at all azimuths and may not be technically feasible; however, it does allow an estimate of the maximum possible area coverage to be made.

As can be seen from the map, profiles could be taken covering a maximum of approximately one-half of the earth's surface. The spacecraft could be in contact with a ground station approximately one fifth of the time in orbit although station down times, priorities, and acquisition times would, in practice, significantly reduce this number.

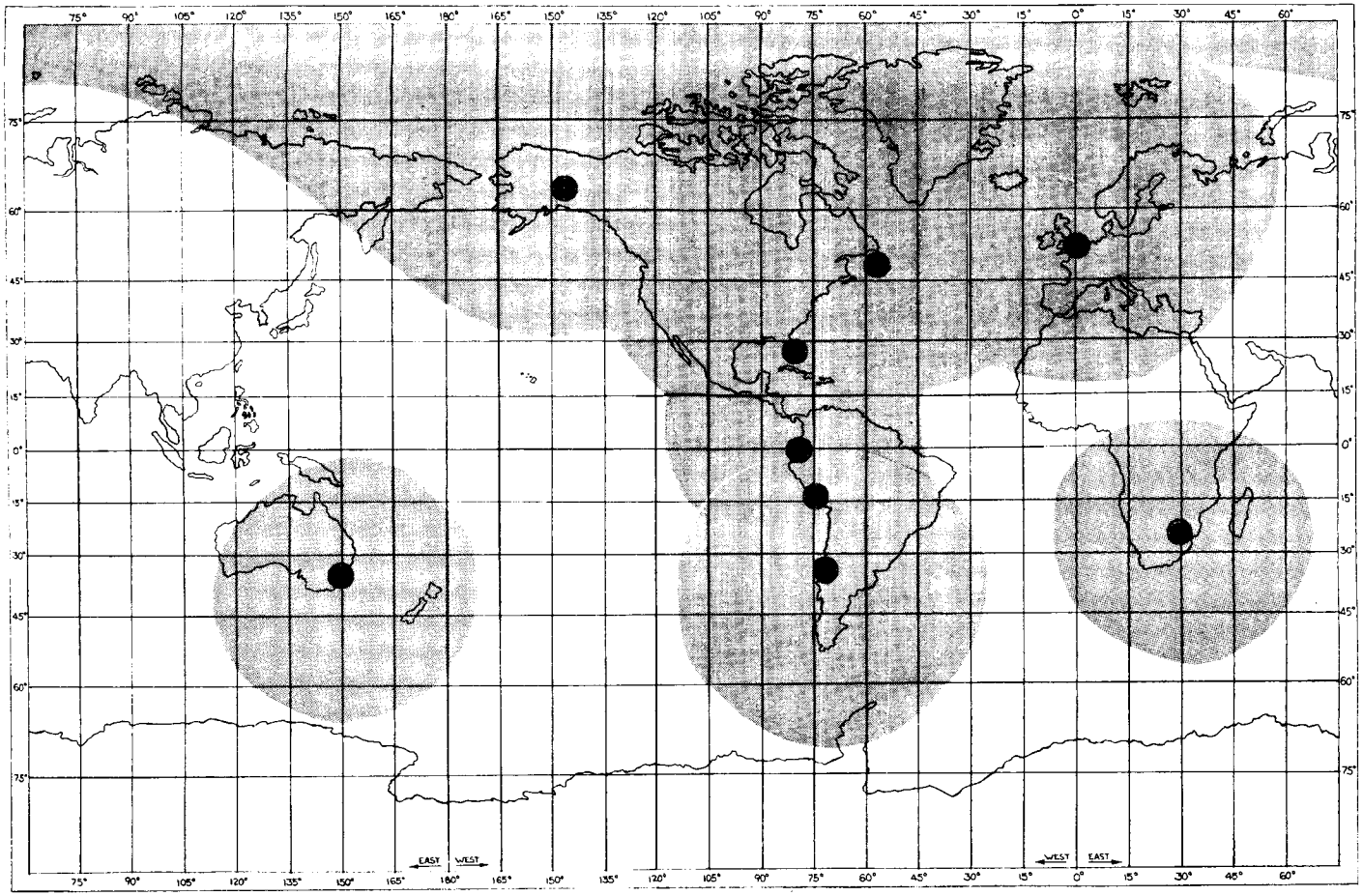

Figure 2. Potential Coverage with Direct Transmission (500 km Altitude)

Because the area coverage possible by direct transmission falls far short of the basic data requirements, it is recommended that data storage be included on the vehicle so that the basic data requirements can be met. Secondary reasons for this recommendation are that the high amount of ground contact time for direct transmission is an unreasonable burden on STADAN and the additional complexity on the vehicle to achieve azimuth profiles and higher sampling rates would more than offset that of adding a storage system.

Figure 3 shows that seven additional ground stations would be required for approximately 90 percent coverage of the earth's surface with direct transmission from a satellite at 500 km altitude. This still does not completely meet the basic data requirements and also does not meet the basic system constraint to be compatible with STADAN. The cost of setting up and operating additional telemetry stations for the life of the program would be prohibitive and is not recommended.

Analog versus Digital Storage

Two possibilities exist for storage of data on the spacecraft: analog and digital. In analog storage, the data is taken directly from the sensors and stored on magnetic tape along with time information. Over the telemetry station the tape recorder is switched to high-speed playback, and the data is transmitted in analog form. In the digital system the analog sensor outputs are digitized immediately, then stored in solid state or tape systems, and transmitted in digital form.

In this system, the measurement resolution requirements and the methods of data generation dictate a digital data handling system.

The resolution requirements of radiance magnitude = 0.01 W/m^2 - sr and tangent height = 0.25 km transform to data bandwidth requirements of on the order of 5 kHz and 100 kHz from the radiometer and starmapper, respectively. If a spacecraft storage time of one orbit (94 minutes) and a telemetry contact time of two minutes are assumed, the transmission bandwidth is a factor of 47 times the required storage bandwidth or 235 kHz and 4.7 MHz for the radiometer and starmapper, respectively. The bandwidths are not compatible with STADAN and, in addition, would require excessively high transmission power on the vehicle. For the digital system, no errors are introduced in the storage and transmission loops as in the case of analog systems. Analog transmission systems typically have accuracies of one to five percent.

Passive radiometers in the spinning vehicle configuration read the horizon profile of interest in less than three degrees of the vehicle revolution of 360 degrees. The starmapper output consists of a small number of pulses corresponding to star positions occurring at random time with the desired information being the times of occurrence of the pulses. To store and transmit data of this type efficiently, it is necessary to eliminate the data collection

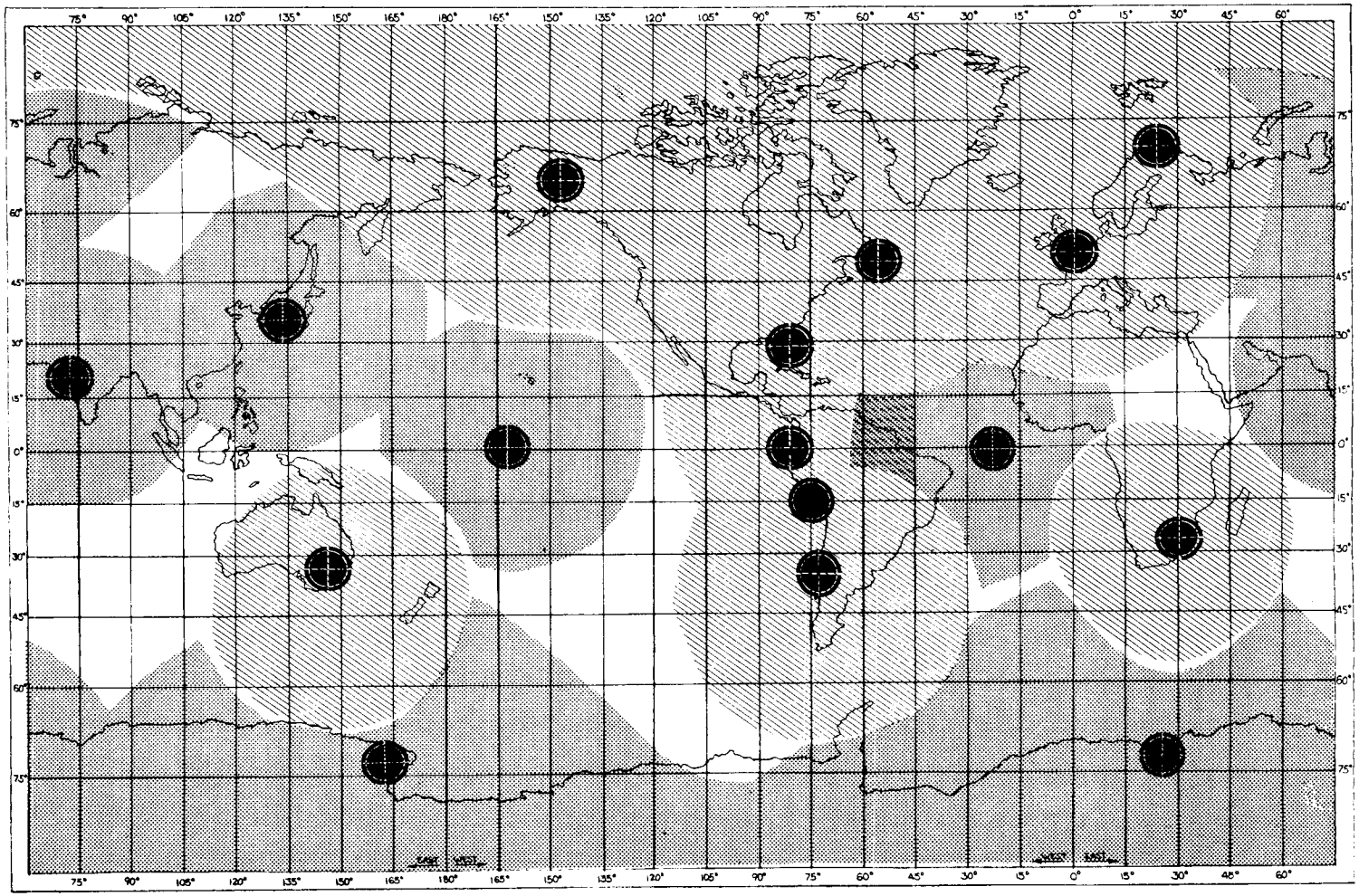

Figure 3. Potential Coverage with Direct Transmission (500 km Altitude) with Seven Additional Ground Stations

and recording during times when no outputs of interest are occurring. In analog recording with magnetic tape, this method of data compression can not be easily achieved because of the randomly occurring star data and the start-stop disturbance torques generated by an incremental tape recorder. In a digital system with solid-state storage, this type of data compression is very easily achieved. Profile samples need only be taken over the fraction of the revolution of interest. The time of occurrence of each star pulse and a measure of its magnitude can be digitized into a single binary word and stored. If no data of interest is occurring, no data is recorded or transmitted. For this system a transmission bandwidth of less than 10 kHz is sufficient,providing a data compression factor of approximately 500 for the digital system over the analog system.

DATA REQUIREMENTS

To estimate the requirements imposed on the data handling system, it is necessary to examine its interfaces with the STADAN to determine output capability and the experiment package to determine input requirements. From an analysis of the STADAN capability, the maximum time between telemetry contacts can be determined. From an analysis of the experiment package outputs and the basic data requirements, the data rate requirements can be determined. These analyses then provide the basis for the requirements on the data handling system.

Data Handling versus STADAN Tradeoffs

One of the basic program requirements is to be compatible with the NASA Satellite Tracking and Data Acquisition Network (STADAN). The capabilities of this network are described in detail in reference 1. STADAN consists primarily of two networks: (1) Minitrack, and (2) Wideband Data Acquisition Facilities. The Minitrack system, consisting of nine stations, operates in the 136 MHz vhf telemetry band. The Wideband Data Acquisition Facilities, some at the same sites as Minitrack stations, have high gain dish antennas and operate in both vhf and S-band regions for telemetry.

To obtain maximum contact from STADAN, the primary telemetry must be done in the 136 MHz vhf band. In this band, a total of 10 STADAN stations are available. These station locations and telemetry acquisition ranges for a satellite at 500 km altitude are shown in Figure 4.

The telemetry acquisition ranges shown are based on a five-degree minimum-elevation angle for the satellite line of sight to the tracking station. From discussions with STADAN personnel and system users, contact is regularly made with satellites at five-degree elevation, except in rare cases where local obstructions hinder the field of view in certain azimuths.

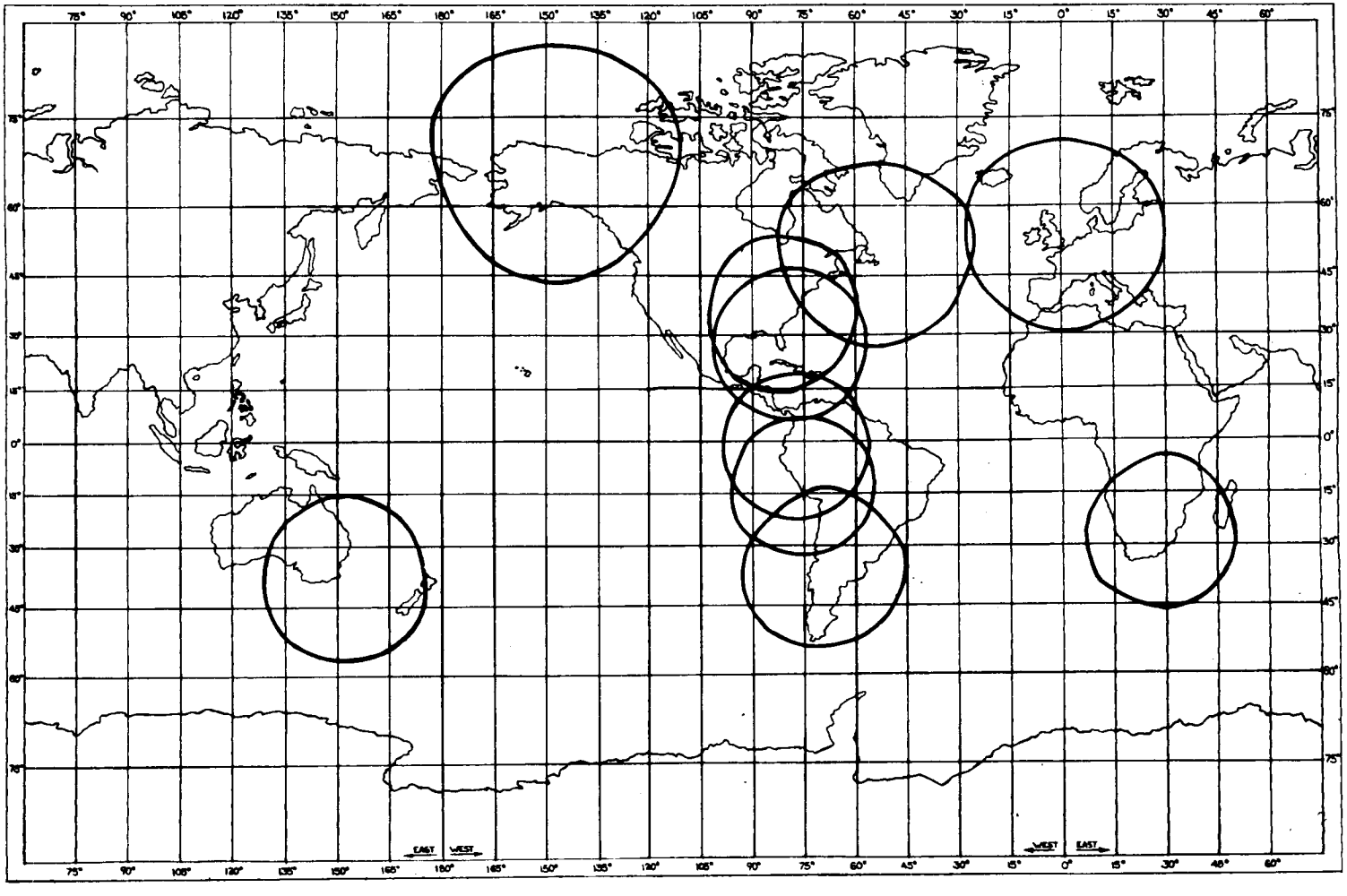

Figure 4. Minitrack Telemetry Coverage
(500 km Altitude)

A program has been developed to compute STADAN contact times and time between contacts for typical days in the life of the vehicle. The stations used, their locations, and the vehicle orbital parameters are detailed in Table 2. These are the 10 STADAN stations to which telemetry contact could be made on 136 MHz. The orbit used is circular sun-synchronous at 500 km altitude. The program generates a series of 23 typical days of contacts which essentially cover all possible combinations with the orbit parameters listed.

A typical day of contacts is shown in Table 3. The maximum time between contacts is approximately 86 minutes which is less than the orbital period of 94 minutes. The contact times range from 3.47 minutes to over 10 minutes. Estimated maximum required telemetry time is two minutes. It can be seen from this list and the map of the stations in Figure 2 that the four stations, College, Alaska; Rosman, North Carolina; St. Johns, Newfoundland; and Winkfield, England, assure contact with the spacecraft nearly every orbit. On a typical day as shown in Table 3, a maximum data storage time of 94 minutes (one orbit period) on the vehicle is sufficient for continuous collection of data. These four stations would be used as primary data acquisition stations with the other stations used only when time between contacts of the primary stations is greater than 94 minutes.

On approximately 98 percent of the orbits, the time between contacts will be less than 94 minutes. A day showing a time between contacts of 165 minutes is displayed in Table 4. The "hole" occurs when the satellite travels north to south at approximately 105° W longitude and can be seen in Figure 4. If the satellite is traversing south to north in this region, no gap appears.

Assuming that 94 minutes storage capacity is used on the vehicle, it can be shown that not more than 17.5 percent of the data in any one spatial cell of the basic data requirements is lost due to this gap. The minimum dimension of any spatial cell covers 20 degree in longitude as shown in Figure 5. All south to north crossings are recorded, and, at a minimum, 65 percent of all north to south crossings of a particular spatial cell will be recorded. Thus, in spite of this gap, at least 82.5 percent of the data will be collected in the affected spatial cells compared to 100 percent in the unaffected cells. The area for which data is lost is shown shaded in Figure 5. The present concept is to take on the order of 150 percent of the basic data requirements to account for random losses of data due to operator error, attitude corrections, etc. With the normally planned redundancy, the basic data requirements will be met even with the gap in the telemetry contacts. Therefore, it is recommended to have storage capability for 94 minutes rather than doubling the size to fill in the gap.

The possibility exists of taking data during the first orbit and losing the second orbit or, conversely, during this missed contact time to spread the lost data over a larger area and reduce the loss in any one spatial cell. This requires a ground command and a built-in time delay on the vehicle. It is not recommended to add this complexity for the very small improvement in data output.

TABLE 2. - PROGRAM OF TYPICAL STADAN CONTACTS

VHF TELEMETRY COVERAGE PROFILES

			NORTH LAT. DEG	EAST LONG. DEG	MIN ELEV. DEG
STATION	1	COLLEGE	64.90	212.10	5.00
STATION	2	FT. MYERS	26.50	278.10	5.00
STATION	3	JOHANNESBURG	-25.90	27.70	5.00
STATION	4	LIMA	-11.80	282.80	5.00
STATION	5	CORORAL	-35.60	148.90	5.00
STATION	6	QUITO	-.60	281.40	5.00
STATION	7	ROSMAN	35.20	277.10	5.00
STATION	8	ST. JOHNS	47.70	307.30	5.00
STATION	9	SANTIAGO	-33.20	289.30	5.00
STATION	10	WINKFIELD	51.50	359.30	5.00

ORBIT ALT= 500.0 KM.
ORBIT INCL= 97.38 DEG.
NODAL LONGITUDE STEP SIZE= 1.00 DEG.
ORBIT PERIOD= 94.62 MINUTES
EARTH RADIUS= 33.3 PERCENT OVER ACTUAL (REFRACTION CORRECTION)
MINIMUM TIME= 3.00 MIN
WESTWARD SHIFT OF ASC. NODE= 23.65 DEG./ORBIT

STATION	MAX. ARC RANGE VISIBLE(DEG)	MAX. DIST.KM.
1	19.73	2331.1
2	19.73	2331.1
3	19.73	2331.1
4	19.73	2331.1
5	19.73	2331.1
6	19.73	2331.1
7	19.73	2331.1
8	19.73	2331.1
9	19.73	2331.1
10	19.73	2331.1

TABLE 3. - PROGRAM OF A TYPICAL DAY OF CONTACTS

EAST LONGITUDE,ASC. NODE (TIME=0) = 6.00 DEG

TIME, MIN.	STATION	MINUTES IN SIGHT	MINUTES SINCE LAST CONTACT	LAST ASC.NODE E.LONG.,DEG.
8.52	WINKFIELD	10.19		6.00
24.66	COLLEGE	9.79	5.95	
55.20	ORROPAL	7.69	20.75	
106.27	WINKFIELD	3.85	43.39	-17.65
105.53	ST. JOHNS	7.02	.00	
118.75	COLLEGE	7.58	6.21	
146.69	ORROPAL	10.05	20.36	
196.84	ST. JOHNS	10.37	40.10	-41.31
212.27	COLLEGE	5.05	5.06	
270.55	SANTIAGO	8.77	53.23	
277.73	LIMA	7.38	.00	
280.35	QUITO	7.62	.00	-64.96
286.99	FT. MYERS	9.00	.00	
289.06	ROSMAN	9.48	.00	
293.16	ST. JOHNS	6.30	.00	
304.05	COLLEGE	5.26	4.59	
365.26	SANTIAGO	9.29	55.95	
371.08	LIMA	9.30	.00	
380.87	FT. MYERS	8.74	.50	-88.62
383.19	ROSMAN	8.75	.00	
394.79	COLLEGE	7.87	2.85	
486.43	COLLEGE	9.94	83.76	-112.27
579.80	COLLEGE	10.22	83.44	-135.93
617.28	JOHANNESBURG	10.36	27.26	
675.54	COLLEGE	7.68	47.89	-159.58
692.15	WINKFIELD	7.55	8.93	
785.55	WINKFIELD	10.36	85.86	-183.23
837.46	ORROPAL	9.09	41.55	
880.69	WINKFIELD	7.19	34.14	-206.89
883.33	ST. JOHNS	5.34	.00	
932.37	ORROPAL	9.17	43.70	
975.86	ST. JOHNS	10.36	34.32	-230.54
991.51	QUITO	6.36	5.30	
993.63	LIMA	8.38	.00	
997.88	SANTIAGO	10.36	.00	
1071.03	ST. JOHNS	7.49	62.79	-254.20
1073.92	ROSMAN	10.21	.00	
1076.16	FT. MYERS	10.36	.00	
1083.59	QUITO	9.62	.00	
1086.92	LIMA	8.71	.00	
1094.96	SANTIAGO	3.47	.00	
1169.55	ROSMAN	6.78	71.12	-277.85
1256.34	COLLEGE	7.03	80.01	-301.50
1313.55	JOHANNESBURG	8.62	50.18	
1336.03	WINKFIELD	7.90	13.87	-325.16
1349.91	COLLEGE	10.09	5.97	
1408.15	JOHANNESBURG	9.00	48.15	
1427.86	WINKFIELD	10.37	10.71	-348.81
1444.02	COLLEGE	10.07	5.79	
1476.37	ORROPAL	5.16	22.28	
1524.00	WINKFIELD	6.71	42.47	-372.47
1526.44	ST. JOHNS	4.80	.00	
1538.15	COLLEGE	8.16	6.91	
1566.10	ORROPAL	10.36	19.78	

TABLE 4.- MAXIMUM TIME BETWEEN CONTACTS

EAST LONGITUDE,ASC. NODE (TIME=0) = 19.00 DEG

TIME, MIN.	STATION	MINUTES IN SIGHT	MINUTES SINCE LAST CONTACT	LAST ASC.NODE E.LONG.,DEG.
9.08	WINKFIELD	10.16		19.00
24.90	COLLEGE	10.33	5.67	
103.61	WINKFIELD	8.89	68.38	-4.65
119.07	COLLEGE	8.95	6.57	
147.59	ORROAL	10.01	19.57	
198.03	ST. JOHNS	9.44	40.44	-28.31
213.00	COLLEGE	6.34	5.52	
242.10	ORROAL	7.62	22.76	
292.66	ROSMAN	4.34	42.93	-51.96
291.48	ST. JOHNS	9.71	.00	
305.88	COLLEGE	4.64	4.68	
364.71	SANTIAGO	10.33	54.19	
370.86	LIMA	10.20	.00	
380.41	FT. MYERS	10.37	.00	-75.62
382.70	ROSMAN	10.37	.00	
396.91	COLLEGE	6.37	3.84	
461.77	SANTIAGO	5.02	58.49	
487.89	COLLEGE	8.97	21.10	-99.27
580.24	COLLEGE	10.33	83.38	-122.93
619.00	JOHANNESBURG	8.85	28.43	
674.57	COLLEGE	9.53	46.73	-146.58
712.12	JOHANNESBURG	8.91	28.01	
771.97	COLLEGE	4.59	50.94	-170.23
785.93	WINKFIELD	9.72	9.38	
880.19	WINKFIELD	9.67	84.54	-193.89
931.76	ORROAL	10.36	41.90	
976.45	ST. JOHNS	9.05	34.33	-217.54
999.88	SANTIAGO	8.58	14.38	
1028.86	ORROAL	4.89	20.40	
1070.45	ST. JOHNS	9.92	36.70	-241.20
1075.24	ROSMAN	7.29	.00	
1077.36	FT. MYERS	8.00	.00	
1083.86	QUITO	10.01	.00	
1086.65	LIMA	10.34	.00	
1092.31	SANTIAGO	9.55	.00	
1168.45	ROSMAN	10.05	66.59	-264.85
1170.98	FT. MYERS	9.47	.00	
1180.49	QUITO	4.33	.05	
1350.35	COLLEGE	8.94	165.52	-312.16
1407.52	JOHANNESBURG	10.34	48.24	
1428.89	WINKFIELD	9.71	11.02	-335.81
1444.27	COLLEGE	10.37	5.67	
1522.52	WINKFIELD	9.70	67.88	-359.47
1538.43	COLLEGE	9.40	6.21	
1567.73	ORROAL	9.20	19.90	

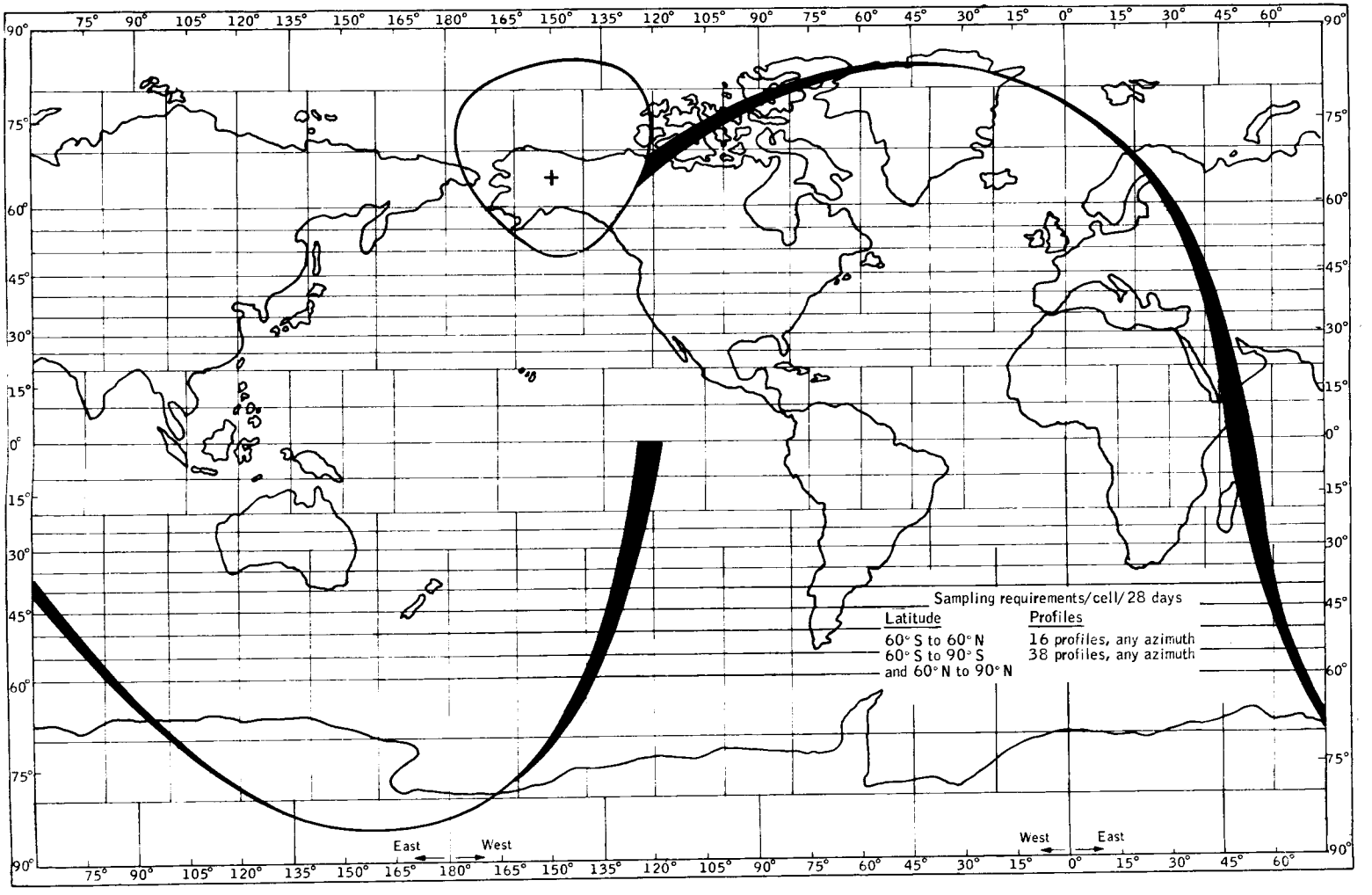

Figure 5. Basic Data Requirements with Superimposed Potential Data Gaps

From Figure 4, it can be observed that an additional telemetry station roughly anywhere in the western two-thirds of the continental United States could eliminate the gap in the telemetry coverage. If it is required to close the gap, it may be feasible to use one of the NASA Manned Space Flight network stations, one of the military stations in New Mexico or California, or a mobile station in this area.

The loss of data for not having data recording capability during telemetry transmission can be shown from Figure 5 also. Assuming a profile collection rate of 0.5 per minute and a maximum telemetering time of two minutes, one profile would be lost each telemetry contact. This is on the order of 2 percent of the total data quantity to be collected, but the loss would be concentrated over the stations. The College, Alaska station, with its telemetry acquisition circle shown in Figure 5, would be the normal telemetry contact on approximately nine of 15 orbits because of its high latitude position providing more contacts for polar orbits than the other stations. The telemetry acquisition circle covers approximately 13 spatial cells of the basic data requirements. In these cells, not less than 79 percent of the data would be collected compared to 100 percent of the data in unaffected cells due to the lost reading during telemetry transmission. Over the other telemetry stations, at least 90 percent of the data will be collected in each spatial cell because of the lower number of telemetry contacts. Again, if an overall data redundancy is considered, the basic data requirements can be met for the spatial cells over the telemetry stations also without having memory system read-in capability simultaneously with read-out capability.

The loss of data over the telemetry stations can be eliminated on the vehicle by having two memory systems or interrupting telemetry transmission to record data. These approaches are feasible but add complexity to the system which may not be warranted by the basic data requirements. The simultaneous read in - read out function is desirable but not critically necessary. If further design of the subsystem shows that a simple mechanization can be achieved, it should be incorporated.

Data Budget

The data budget or quantity of data to be stored on the vehicle is based on the basic experiment requirements and the constraints and requirements of the subsystems to meet those requirements.

Basic experiment requirements. -- The basic engineering set of profile requirements as defined in the Part I study are:

- Uniform time sampling in each space cell over each time cell
- One-year continuous coverage
- 13 time cells (28 days/cell)
- 408 space cells

- ► Latitude (60°S to 60°N) 320 cells
- ► Latitude (60°N to 90°N) 44 cells
- ► Latitude (60°S to 90°S) 44 cells

- Samples per cell
  - ► Latitude (0°to 60°) 16 samples
  - ► Latitude (60° to 90°) 38 samples
- Total samples for one year - 110 032

Vehicle data requirements. -- The data budget on the vehicle is comprised of the radiometer, attitude determination, and spacecraft status (housekeeping) data required to meet the basic experiment requirements. The budget is based on an assumed maximum storage time on the vehicle of one orbit (approximately 94 min).

A study, described in Appendix A, examined the basic experiment requirements with the constraints imposed by a real system to develop the basic radiometer sampling requirements. The experiment requirements were analyzed to determine the effects of varying total profile collection on the analysis of several of the "horizon locators" defined in Part I of this program. It was shown that considerably higher confidence in the results could be obtained by increasing the profile sample over that called for in the basic requirements. For this reason, both a recommended and a minimum data budget are shown in this section.

The recommended and minimum data budget are shown in Tables 5 and 6, respectively. The difference between the two is only in the quantity of radiometer data recorded. In the recommended budget, 68 profiles/orbit are recorded for a total of 378 508 profiles/year.

In the minimum budget (roughly meets the basic experiment requirements) approximately 20 profiles/orbit are recorded for a total of 110 032 profiles/year. The advantages of taking additional horizon profiles are described in Appendix A along with the recommended orbital sampling rate.

Approximately 550 samples to 10-bit accuracy are required on each profile to meet tangent height resolution and amplitude accuracy requirements. In addition, 26 10-bit calibration samples and 50 bits of time labeling are required for an estimated total of 5810 bits/profile. Further definition of these numbers are given later in this report.

The starmapper budget is based on recording time intervals, transit times, and the threshold amplitude level of up to six stars in a three-slit device on each revolution of the vehicle for 1/3 orbit. These numbers are further defined later in this report. At a vehicle revolution rate of three rpm, this totals 43 710 bits per 1/3 orbit.

TABLE 5. - RECOMMENDED DATA BUDGET

Radiometer	
550 10-bit samples/profile	5 500 bits/profile
26 10-bit calibration samples/profile	260 bits/profile
3 time labels	50 bits/profile
	5 810 bits/profile
68 profiles/orbit	395 080 bits/orbit
Starmapper	
18 20-bit times/rev	360 bits/rev
18 5-bit transit times/rev	90 bits/rev
1 threshold level/rev	5 bits/rev
1 time label	10 bits/rev
	465 bits/rev
282 rev/orbit - 1/3 orbit	43 710 bits/orbit
Sun sensor	
4 20-bit times/rev	80 bits/rev
1 time label	10 bits/rev
	90 bits/rev
282 rev/orbit - 2/3 orbit	16 920 bits/orbit
Status	
30 8-bit words	240 bits/profile
1 set/recorded profile	16 320 bits/orbit
Total on-board storage requirement	
Raw data	472 030 bits/orbit
Storage inefficiency, 5%	23 600 bits/orbit
Parity, sync words, 4%	19 825 bits/orbit
Total	515 455 bits/orbit

TABLE 6. - MINIMUM DATA BUDGET

Radiometer	
20 profiles/orbit	116 200 bits/orbit
Starmapper	43 710 bits/orbit
Sun sensor	16 920 bits/orbit
Status	16 320 bits/orbit
Total	193 150 bits/orbit
Total on-board storage requirement	
Raw data	193 150 bits/orbit
Inefficiency, parity, sync, 9%	17 383 bits/orbit
Total	210 533 bits/orbit

The sun sensor budget is based on recording time intervals of sun entering and leaving a 2-slit device on each revolution for the 2/3 orbit in which the unbaffled starmapper does not operate. These numbers are further defined later in this report. This produces a total of 16 920 bits/orbit.

The general concept for handling spacecraft status data is that noncritical, slowly varying data will not be recorded on the vehicle but will be telemetered directly to the ground stations on command. Some critical points must be monitored periodically throughout the orbit and recorded. For simplicity, these points are collected in synchronism with the profile sampling mechanism. An estimated 16 320 bits/orbit of status data will be generated.

In determining the actual storage requirement, storage inefficiencies, error coding, and synchronization information must be included. Generating a memory word of uniform length from the multiple length input words causes an estimated inefficiency of 5 percent. Error coding with a parity bit adds approximately 3 percent, and synchronization words less than 1 percent. The error coding and sync data could be added after storage, prior to transmission, but including it in storage provides fault checking and possible correction of errors in the memory.

The recommended data budget shows an estimated 515 455 bits/orbit storage requirement. The minimum budget shows a total of 210 500 bits/orbit. The penalties paid for increasing the data budget are described in the following section.

Data Budget Alternatives

Several general studies were conducted to examine the alternative methods of collecting the required data and the penalties involved in taking additional desired data. These are described in the following paragraphs.

Additional locators analysis versus increased storage. -- The basic data requirements for Part II call for taking sufficient data to analyze three of the locators defined in the Part I study. The additional data requirements to analyze a total of 7 and a total of 11 locators are described in Appendix A. The increased complexity in the data handling system to meet these potential requirements is described in the following paragraphs.

The basic data requirement for analysis of 3 locators including L4 (2. 5) reduces to the collection of profiles at the average rate of approximately 0. 3 profile per minute. Analysis of seven locators through L2 (0. 5) reduces to an average collection rate of 0. 5 profile per minute. Analysis of 11 locators through L1 (0. 3) reduces to an average collection rate of approximately 0. 9 profile per minute.

The present concept requires the vehicle to spin at 3 rpm for stability reasons, thus profiles are being scanned at a higher rate than required to meet the increased data requirements. Because of this, the increase in

hardware for additional experimental data is essentially only the additional memory capacity required to hold the data. At present, the memory capacity required is total data quantity generated for one orbit (94 minutes).

At 0.3 profile per minute, 28 profiles are generated in 94 minutes by the radiometer totalling on the order of 160 000 bits of data. At 0.5 profile per minute, approximately 260 000 bits of data are generated in 94 minutes. At 0.9 profile per minute, approximately 470 000 bits of data are generated in 94 minutes. Adding a fixed 77 000 bits of attitude and status data and nine percent for storage inefficiency and error detection, the total storage requirements are 261 000, 367 000, and 597 000 bits, respectively.

The curves shown in Figure 6 describe the penalties paid for increased memory capacity. A curve is not shown for power requirements since it is less than 1 watt up to 1 megabit and is not a major factor. Based on present system constraints, size and weight of the memory would not be critical up to 1 megabit. Production time and reliability are the major tradeoff items. The key point of the reliability curve is that a 500-kilobit memory has approximately 70 percent of the complexity of the 1-megabit memory and a 100-kilobit memory has approximately 35 percent of the complexity; therefore, reliability is considerably improved with decreasing size. The curve is based on a reliability of 0.5 for a typical no-redundancy 1-megabit memory for one year.

Flexibility possibilities. -- The basic data requirements do not specify flexibility in the data collection. The primary goal of the mission is to collect a basic set of horizon profiles from which horizon radiance characteristics can be determined. However, in a measurement program of this type, unknown or unexpected factors often appear for which additional data would be highly desirable. For example, it may be desirable to have more data over specific disturbances, such as the Aleutian anticyclone, stratospheric warmings, large tropical storms, etc. Specific locations or times of these events are not known prior to launch and, thus, require some flexibility on the spacecraft to take additional data in these areas.

Because of two factors, considerable flexibility can be easily achieved. The vehicle in the present concept is spinning at 3 rpm, thus generating horizon profiles at a higher rate than the basic requirements call for, and storage for one orbit (94 minutes) of data taken at normal rates is provided. If the full STADAN is used, time between telemetry contacts can be much less than 94 minutes for a high percentage of orbits, thus providing memory space for a higher data rate between these contacts on command from the ground. With very little hardware increase (on the order of 10 integrated circuits), the profile recording rate could be doubled or tripled over the interesting areas. This would require two additional ground commands, which is within the capacity of the present concept.

By purely allowing the vehicle to spin down below its normal spin rate range, higher sampling resolution can be obtained on the profiles over a reduced tangent height range. It may be of interest to examine the fine structure of the horizon profiles periodically.

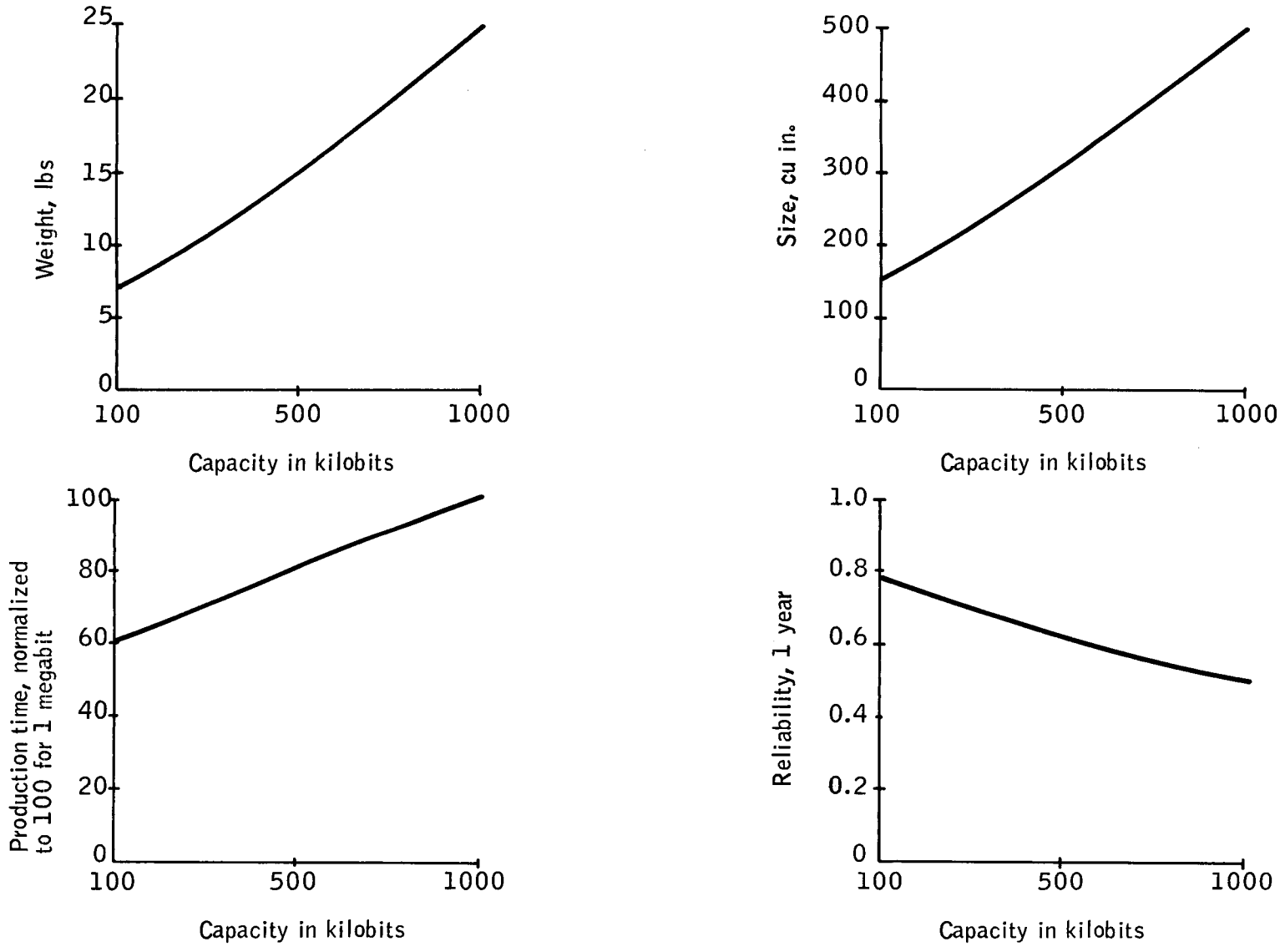

Figure 6. Memory System Size, Weight, Development Time, and Reliability Versus Capacity

As the vehicle design progresses, many possibilities for flexibility in the data taking approach will arise which cost very little in hardware. These items can and should be analyzed for inclusion in the data collection concept. The basic criteria for inclusion is whether it would seriously affect the probability of meeting the basic data requirements.

Variable sampling rate versus fixed sampling rate. -- Rough estimates have been made on the additional hardware needed to allow for a variable sampling rate on the radiometers. The variable sampling rate, as a function of latitude, allows a closer fit to the basic data requirements and, thus, a more uniform redundancy of data. The advantages of a variable sampling rate are described in detail in Appendix A. If minimum data requirements are considered, the variable sampling rate can save 20 to 25 percent in the required radiometer data storage. As a minimum, this would reduce storage by 40 000 bits saving approximately 1 lb, 25 cu in., and negligible power. Reliability would be slightly increased.

The variable data collection requires resetting capability from the ground, an orbit segment counter with an 8-step sequence decoder, and additional gating in the radiometer timing and control. The estimated increase in hardware for this function is 42 to 48 integrated circuits. The basic radiometer data collection unit at a uniform sampling rate requires approximately 120 integrated circuits. This additional hardware would require approximately 0.5 watt of power, 5 cu in., and 1 lb and have a probability of 0.97 of lasting 1 year without failure.

This is approximately the same quantity of hardware necessary if it is desired to take more data in the winter hemisphere than summer. If both features are desired, the hardware required may increase by another 20 percent of the increase listed above.

In general, a single uniform sampling rate system is the simplest and, therefore, most reliable. In this case, the variable sampling rate (fixed sequence of rates) appears worthwhile to achieve more uniform data coverage and is recommended in the concept. The penalties of including the additional hardware are roughly offset by the decreased storage requirement.

Data compression. -- A number of data compression techniques have been suggested for the HDS vehicle as ways of taking more data with a limited size storage system. Two specific techniques are discussed here along with the problems involved. These techniques are not recommended for further investigation. The accuracies required and the nonuniform data-taking procedures of the HDS vehicle do not lend themselves well to data compression techniques.

Some approaches, such as time labeling large blocks of data rather than individual samples and recording data only from the horizon rather than continuously, can and are being incorporated into the concept.

Differencing of samples: Rather than use a 10-bit word for each sample on the radiometer only the differences between present and previous

readings would be recorded. A 5-bit word is sufficient to transmit each difference making a factor of two savings in radiometer data.

Problems with this approach are that if a bit is lost or in error, the error propagates through the whole profile and the error may not be detectable.

Ground processing to reconstruct the profiles is increased but should not be significantly more complicated.

Averaging of profiles: Spinning at 5 rpm with two radiometers, the possibility exists of obtaining many more profiles than requirements call for. Two or more consecutive profiles could be averaged together and the mean profile could be stored and transmitted.

The reduction in data quantity to be stored would depend on the number of profiles averaged together. It would not be feasible to average profiles from two radiometers because of calibration differences and possibly significantly different viewing locations. In addition, it will be difficult to average space-to-earth scans with earth-to-space scans because of detector and amplifier responses that cannot be easily calibrated out on the spacecraft. Profiles from approximately five latitude intervals could be averaged. This may be up to five profiles which would give a factor of five data compression.

The problems associated with this approach or any technique of comparing profiles on the spacecraft appear formidable. To average profile amplitudes together requires precise knowledge of the tangent heights. This information cannot be determined without considerable analyses of starmapper data which is not feasible to do on the spacecraft. It may be possible that vehicle rates will be slow enough that, with only a precise determination of spin rates, profiles could be averaged over a short time interval. However, the accuracies required make this questionable.

To maintain the accuracies required, the averaging process would have to be done after digitizing. This would require significant temporary storage and processing equipment on the vehicle.

DATA HANDLING SUBSYSTEM COMPONENTS

Command Verifier and Decoder Unit

Requirements. -- The HDS satellite system must be capable of responding to ground commands for a number of functions. Some of the commands will be used only once in the lifetime of the vehicle and some will be used every data acquisition contact.

The major constraint on the spacecraft command unit is that it be compatible with STADAN. The STADAN command system standards are described in reference 2 and are briefly discussed here.

The STADAN system has three basic command systems: (1) tone command; (2) tone digital command; and (3) pulse code modulation (PCM) instruction command systems. They are intended for use where only a few (up to 35) simple on-off commands are required. The tone-digital command system was developed for simple, real-time on-off commanding and is capable of transmitting up to 70 commands. The PCM system is a high capacity link for complex commanding functions and is presently available at the Wideband Data Acquisition stations only.

The tone digital command system appears to best fit the HDS system requirements, as described in the following section. Less than 70 commands will be required and the non-real time commanding can be achieved with the use of on-board programming. This system is available at all STADAN stations. The STADAN standard covering the tone digital command system is reproduced in Appendix B.

A command in this system consists of a series of five words, each consisting of eight bits, one sync bit, and one blank period. The series consists of a unique address word sent twice and an execute word sent three times. The address word identifies the spacecraft and enables the command hardware. The execute word contains the specific command function to be performed. Receipt of one correct address word and one valid execute word is sufficient to effect the command. Repeating of the words increases the probability of reception under adverse conditions.

Each word is generated from a fixed number of zeros and ones for error detection and interference rejection. The address word consists of some combination of six ones and two zeros and is assigned by GSFC to the spacecraft. The execute word consists of combinations of four ones and four zeros. A total of 70 execute words can be generated from these combinations. With this coding, all odd errors and 43 percent of all two-bit errors can be detected. To further decrease the possibility of spurious commands, the execute word must be received within a fixed time period after the address command.

A representative list of the commands to be received and processed by the command unit is shown in Table 7. This list is called representative because as system design progresses the command requirements can be expected to change. The selection of the tone digital command system with capability of 70 commands leaves some room for expansion. In addition, many of the commands could be combined to a lesser total by sequencing or repetition to allow room for more flexibility.

Command unit concept. -- The STADAN Tone Digital Command System fits the system requirements best and is, therefore, recommended for use. It has sufficient command capacity with 70 commands for the HDS system and is installed at all STADAN stations planned for use in this program. The STADAN Tone Command Systems, having a capacity of 35 commands, could be used for this program by using sequences to generate additional commands. It, however, would add hardware on the spacecraft and does not provide as "secure" a system as does the tone digital system. The PCM

TABLE 7. - REPRESENTATIVE LIST OF COMMANDS

	Number of commands
Attitude control	
Attitude error correction	
Select time delays	5
Select positive polarity	1
Select negative polarity	1
Select high torque (Low selected automatically)	1
Spin control	
Select time delays	3
Select positive polarity	1
Select negative polarity	1
Residual compensation	
Select positive polarity (Negative selected by toggling)	1
Select torque level (8 levels selected by command repetition)	1
Passive damper	
On command (Off selected by toggling)	1
Redundancy control	
Energize primary V - head sensor, primary logic (Primary sensor - redundant logic, redundant sensor - primary logic, redundant sensor - redundant logic selected by command repetition)	1
Total	17
Structures	
Release transmitting antennas	1
Release solar panels	1
Deploy solar panels	1
Total	3

TABLE 7. - REPRESENTATIVE LIST OF COMMANDS - Continued

Communications		
Tracking beacon on (Off selected by toggling)		1
Transmit by S band (Automatic shut off on completion)		1
Transmit by vhf (Automatic shut off on completion)		1
Transmit status data (Turn off by toggling)		1
vhf on (beacon mode) (Turn off by toggling)		1
	Total	5
Radiometer control		
Select detector chopper no. 1 (No. 2 selected by toggling)		1
Select power supply no. 1 (No. 2 selected by toggling)		1
Select calibration unit no. 1 (No. 2 selected by toggling)		1
Calibrate mode on (Turn off by toggling)		1
	Total	4
Starmapper - sun sensor control		
Select starmapper no. 1 (No. 2 selected by toggling)		1
Starmapper variable threshold (8 levels set by command repetition)		1
Select sun sensor no. 1 (No. 2 selected by toggling)		1
	Total	3
Power control		
System no. 1 power reclose		1
System no. 2 power reclose		1
Radiometer no. 1 power reclose		1
Radiometer no. 2 power reclose		1
Starmapper no. 1 power reclose		1
Starmapper no. 2 power reclose		1
Sun sensor no. 1 power reclose		1
Sun sensor no. 2 power reclose		1

TABLE 7. - REPRESENTATIVE LIST OF COMMANDS - Concluded

vhf power reclose	1
S-band power reclose	1
Beacon power reclose	1
Data handling system power reclose	1
Array current measure	1
Isolate array no. 1 (Turn on by toggling)	1
Isolate array no. 2 (Turn on by toggling)	1
Battery no. 1, hi-charge off (Turn on by toggling)	1
Battery no. 2, hi-charge off (Turn on by toggling)	1
Nonessential bus off (Turn on by toggling)	1
Total	18
Data handling control	
Programming zero reset	1
Increase orbital period register	1
Decrease orbital period register	1
Select timing unit no. 1 (No. 2 selected by toggling)	1
Collect earth-to-space profiles (Sun interference removed by fixed program, moon interference corrected by ground commands)	4
Total	8
Grand total	58

Instruction Command System has considerably more capability than needed for this program. However, it is presently available only at the Wideband Data Acquisition Facilities and, for this reason, is not considered.

A functional block diagram of the command verifier and decoder unit is shown in Figure 7. In the recommended concept, the spacecraft can receive ground commands from both S-band and vhf ground stations. The format of the commands will be the same in both cases. The verifier and decoder unit consists basically of a 10-bit shift register, an address validation circuit, and the command decoding circuitry. The unit will be compatible with the STADAN Tone Digital Command Standard reproduced in Appendix B.

A command sequence consists of the spacecraft address word sent twice and the command execute word sent three times with fixed timing on the transmission of the sequence. Up to four different execute commands can be sent with the transmission of an address. When the address word is entered into the register, the receipt of the sync bit is detected, enabling the check for valid address. If the received word is the valid address of the spacecraft, an execute enable is generated for the time required to receive four possible commands. The execute enable shuts off automatically to reduce the possibility of spurious signals generating commands. The execute word following the address is then entered in the register. When its sync bit is detected, the command is checked for validity and decoded. A "one shot" circuit is shown in Figure 7 to assure that the command generates only one pulse to the programming and control logic. This is needed because the execute word for a single command is transmitted three times to improve the probability of reception.

The gating, as shown in Figure 7, directly does the validity checking of the two "1", six "0" coding of the execute word. By using all eight bits of the word in decoding, it assures that one and only one command is decoded at a time. This function can be performed in several ways with the most efficient way selected only by including the integrated circuit package constraints.

Command security. -- Two basic types of errors can cause trouble with the command system: (1) operator error in sending the wrong command; and (2) wrong commands generated by spurious transmission noise. Possible command techniques which can, in varying degrees, check the errors are shown in Table 8.

Very little can be done with hardware on the vehicle to prevent or eliminate operator error in sending a wrong valid command. In some systems, the command has been transmitted back to the ground requiring a verification signal before it is executed. If verification is required from the originator of the command, some intermediate operator errors may be detected and corrected. However, it adds considerable time and hardware to the command loop and is not considered feasible for the HDS. For this system, it appears no highly critical mission sensitive commands are required. A wrong command will, in worst cases, cause losses of data for on the order of an orbit, but will not be able to destroy or seriously degrade the mission. Detailed operational cross checking and near real-time analysis of telemetry

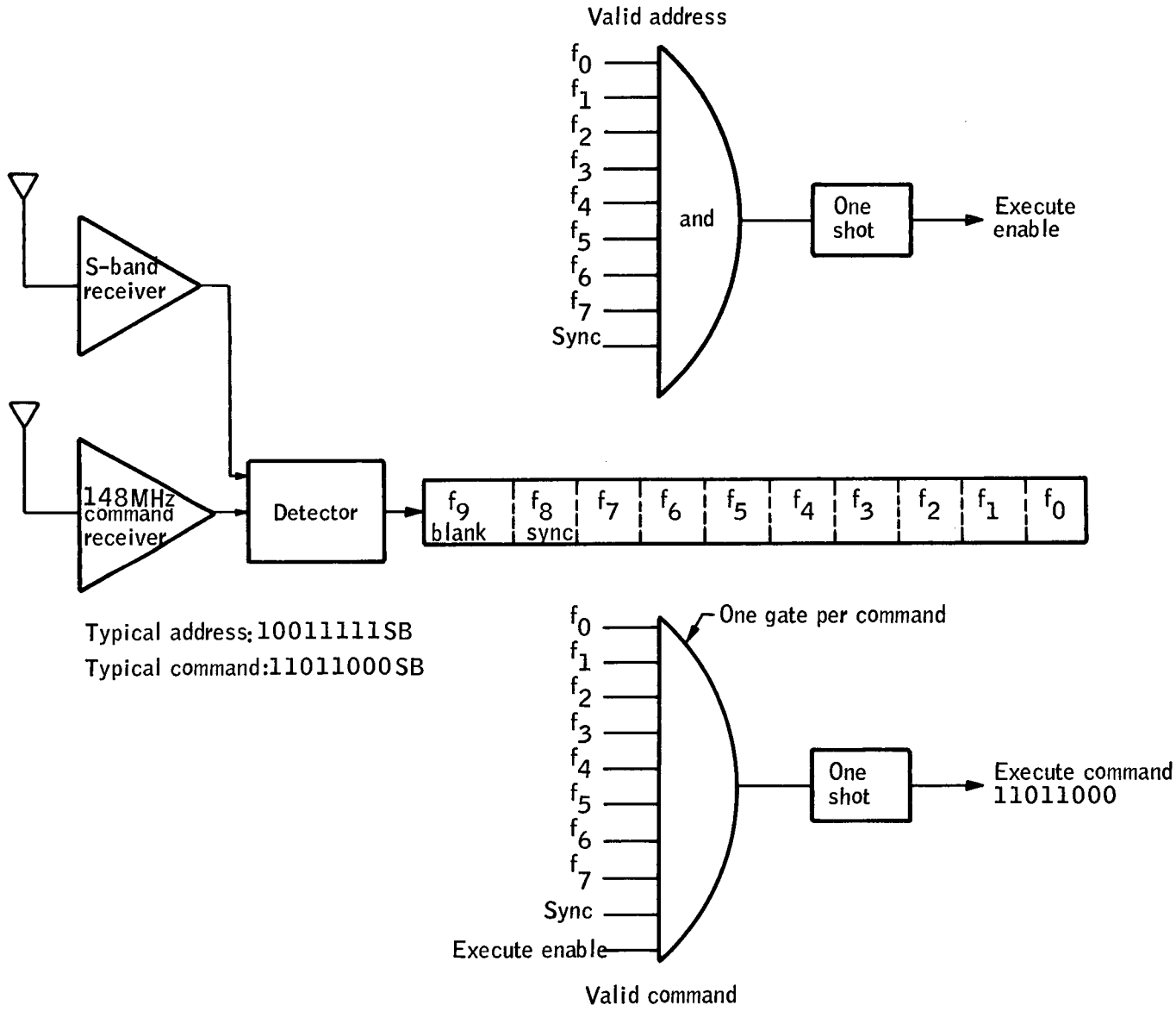

Figure 7. Command Verifying and Decoding

TABLE 8. - COMMAND SYSTEMS TECHNIQUES

System	Command transmitter	Spacecraft	Spacecraft transmitter	Command transmitter	Spacecraft	Spacecraft transmitter	Stadan capability
1	Command	Execute	-	-	-	-	Yes
2	Command	Execute	Marker (no info)	-	-	-	Yes
3	Command	Execute	Command	-	-	-	Yes
4	Command	Store (not execute)	Marker (no info)	Command	Executes	Marker (no info)	Yes
5	Command	Store (not execute)	Command	Command	Executes	Marker (no info)	Yes
6	Command	Store (not execute)	Command	Command	Executes	Command	Yes

data can hold data losses due to operator errors to a minimum. Because the commands are not generally extremely critical, the command system technique no. 2 in Table 8 is selected for this vehicle concept. As part of the spacecraft status telemetry transmission to the ground, reception of commands should be transmitted and, where possible, the response to the commands should be measured and transmitted. This provides a rapid indication to the ground control center of command errors. Errors due to spurious transmission noise can be significantly reduced by additional hardware on the spacecraft. The basic 4-out-of-8 bit coding provides a means of detecting all odd and 43 percent of all even errors. The on-board decoding should use all 8 bits of the word to achieve this error reduction rather than a simpler decoding procedure.

The timed execute enable based on the receipt of a correct address word also reduces the probability of spurious commands. The enable is generated for approximately 0.5 sec after the address word is received. This is the only time an execute command can be performed. For errors to occur any other time, both the address and the execute words would have to be spuriously generated in sequence within 0.5 sec.

In addition to the two logical security checks, an audio squelch control can be used in the detector circuitry to filter out spurious frequencies. Integrators are often used to filter out high frequency components. Another approach is to use internal clocks to make a number of samples on each bit position (window discrimination) to further narrow the bandpass and discriminate against noise. Both approaches are feasible and have been used on flight systems. Audio filtering would normally be included in the command receiver. Window discrimination is not included in the concept but can be included if further analysis shows a requirement.

Spacecraft Time Reference

The timing unit consists of a basic time reference, a counting register or clock, and system clock outputs. Because tangent height or even attitude cannot be determined on the spacecraft, it is necessary to correlate data from all sources together with the common labeling parameter, time. Two critical timing functions are required: (1) the relative timing between radiometer and attitude data on board the vehicle; and (2) the correlation of relative vehicle time to real ground time. This includes a system requirement for correlation of station time to real time.

Requirements. -- An error occurs in correlating the radiometer and attitude data taken in relative spacecraft time with orbital position and altitude data taken in ground station time. The system error analysis, operating on the basic tangent height resolution requirements of ± 0.25 km, has allotted a maximum error to this source of ± 3 arc sec (corresponding to ± 0.035 km tangent height at 500 km altitude).

Errors of 2 km position or 1 km altitude will cause up to 1 km error in tangent height. Thus, an error of ± 0.035 km tangent height means that ground

position and altitude errors must be less than ± 0.070 km and ± 0.035 km, respectively. Since altitude will change slowly in a circular orbit, the primary timing error will be due to position uncertainty. At a 500 km circular orbit, the vehicle travels approximately 9 km/sec. The allowable position error then corresponds to a timing error of ± 7.7 msec. This requires that spacecraft time be measured and correlated with ground real time to ± 7.7 msec. The spacecraft time reference shall not drift more than ± 7.7 msec between ground contacts (maximum time 188 min) indicating a stability of 6 parts in 10^7.

Timing errors occur in sampling and labeling radiometer and starmapper data because of the clock stability and resolution. The system error analysis has allotted a maximum error to this source of ± 3 arc sec (corresponding to ± 0.035 km tangent height at 500 km altitude).

At the vehicle nominal spin rate of 3 rpm, 3 arc sec corresponds to a timing accuracy of 46.3 μsec. The relative timing errors are made up of three components: (1) the radiometer sampling resolution; (2) the starmapper sampling resolution; and (3) the basic clock drift over the data correlation period. Dividing the errors equally (rms) places a timing requirement of ± 26.7 μsec on each component. The maximum sampling windows or resolution shall be less than ± 26.7 μsec. Assuming a data correlation period of three revolutions of the vehicle, the basic clock drift shall be not more than 26.7 μsec per 60 sec indicating a stability requirement of 4 parts in 10^7.

Concept description. -- A block diagram of the system time reference is shown in Figure 8. It consists of a crystal oscillator, a 30-bit counting register, and associated gating to pick off times and generate the system clock pulses.

The stability requirements on the oscillator are on the order of 4 parts in 10^7. These requirements can easily be met with a temperature controlled crystal oscillator.

A 30-bit binary counting register is used to provide a cyclic time reference of approximately 100 minutes in length. A binary digital code is used throughout the data handling system to be compatible with STADAN requirements. Parallel read-out is required from the register for time labeling of data. The last eight bits of the register are used to provide a rough vehicle revolution count with a precision timing mark occurring approximately each 23 seconds. Thus, frames of data can be labeled with one time word, the revolution count, and all data in that frame then only needs to be labeled with time from the revolution timing mark. Within a revolution, the time label used is the word in bits f_2 through f_{21} of the register. This approach permits the use of a 20-bit time labeling word rather than 28-bits for each label. It should be pointed out that the "revolution count" is not actually synchronized with the vehicle spin nor is it required to be, but is used only as a technique to reduce the total data storage requirement.

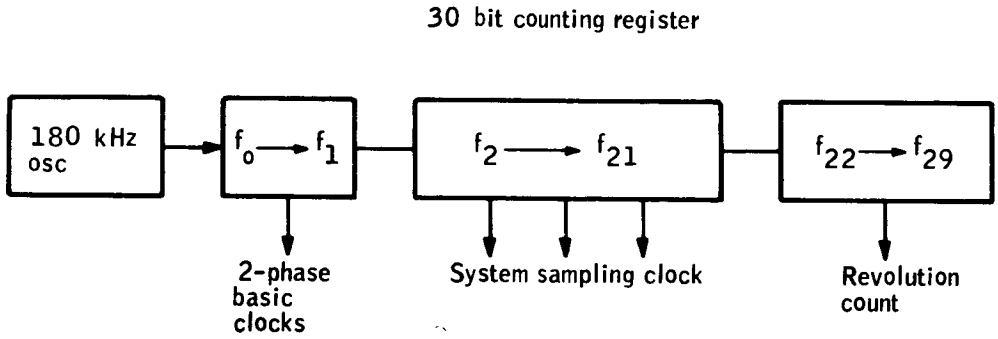

Requirements:

1. Parallel binary read-out
2. Clock stability, 4 parts in 10^7/hr

Figure 8. System Time Reference Diagram

Gating is required to generate synchronized timing clocks for all of the subsystems on the vehicle. Sampling clocks are required for radiometer digitizing, starmapper digitizing, and spacecraft status point sampling. Timing clocks are required for internal data controls, such as programming, shift pulses, data transmission, etc.

Relative to real time correlation. -- The relative spacecraft time must be transmitted to ground periodically and measured to the accuracy of ± 7.7 msec as detailed in the preceding requirements paragraph. It is not feasible to reset the spacecraft clock by ground command because of timing errors on the order of 1 second associated with the tone digital command system. Thus, the present concept is to allow the spacecraft clock to drift and measure periodically the drift to maintain accuracy tolerances.

Time measurement will be made on each data transmission. When a ground command is received to start transmission, the vehicle will hold until the next revolution timing mark occurs and then transmit the first word starting precisely with the timing mark. The timing mark and the bit transmission timing will all have 26 μsec precision; thus, the spacecraft relative time can be measured simply by recording the time of reception of the data on the ground in station time. The word transmitted is a synchronizing word. The second word will contain the revolution count from the timing register. The measurement of the reception time will provide a measure of the small drift of the spacecraft clock while large drifts or drop-out errors can be determined by checking the revolution count.

This method of time measurement is compatible with STADAN operations. Because the timing accuracy on the vehicle and the transmission errors are on the order of a few μ sec, the major time error will be due to the individual STADAN station's correlation of incoming data to real time. Estimated errors due to STADAN station time variations are 1 to 5 msec. This is within this program's requirement of ± 7.7 msec.

If the STADAN station time errors become a limiting factor in the system design, it is possible to improve their accuracy by bringing a master time standard to each station and synchronizing them to a much higher degree of precision than is presently done over the transmission link. At present, this is not needed or recommended.

Spacecraft Programmer

The spacecraft programmer generates the control functions for the system. Modes and sequences of operation are generated from the ground commands.

Requirements. -- The requirements on the programmer are generated by demands and constraints of each of the subsystems on the vehicle.

The major constraint on the programmer is that the command system is capable of transmitting only real-time pulse-type commands and is available for commanding only at short intervals over the ground stations. Thus,

control for any functions to be performed in other parts of the orbit must be generated by an on-board program.

Sequences must be generated for three functions where the operation occurs out of range of ground stations. These are the attitude error correction, the spin control programs for the attitude control subsystem, and the data collection sequence for the data handling subsystem.

The attitude control programs require magnetic torquing sequences to be generated when the spacecraft is in a particular position with respect to the magnetic poles of the earth as shown in Figure 9. These sequences are required on the order of every 100 orbits and are cycled through only once per ground command. The sequences are shown based on time from the College, Alaska, station. The programming is simplified if only one station is used to command start of sequences of this type. In this case, this is not a significant system constraint in that College, Alaska, is capable of contacts on approximately 10 of 15 orbits. Sequence timing accuracy requirements are on the order of ± 30 sec.

The data collection sequence is based on latitude since the basic data requirements for the program specify variable profile sample requirements as a function of latitude. As discussed in a previous section, a variable sampling rate provides better data coverage than a fixed sampling rate and reduces on-board storage requirements. The required sequence is as shown in Figure 9. This sequence is cyclic, repeating every half orbit. Periodic resetting of this sequence by ground command will be required to maintain synchronism with orbit position. Timing accuracy should be on the order of 1 min, or 4° latitude, to preserve usefulness of the variable data collection rate.

Two similar sequences in the data collection routine also are a function of vehicle position and can use the variable sampling rate sequence: (1) selection of earth-to-space or space-to-earth profiles from the radiometer to minimize sun and moon interference; and (2) selection of the starmapper or sun sensor. These occur at roughly fixed positions in a sun-synchronous orbit.

The simple on-off type commands do not require significant programming. The pulse type ground commands will be used to set flip-flop storage elements which provide a control level output until turned off by ground or internal command.

Programmer concept. -- A general block diagram of the programming unit is shown in Figure 10. The unit consists primarily of flip-flop storage elements for on-off type commands, a binary counter and gating for generating attitude control subsystem (ACS) attitude and spin control sequences, and a cyclic binary counter and gating for generating the data collection sampling sequences.

Flip-flop storage elements are used to change the pulse ground commands to a control level where necessary. The flip-flop outputs also provide a convenient location for checking receipt of commands on the spacecraft. These outputs should be telemetered to ground as part of the status transmissions.

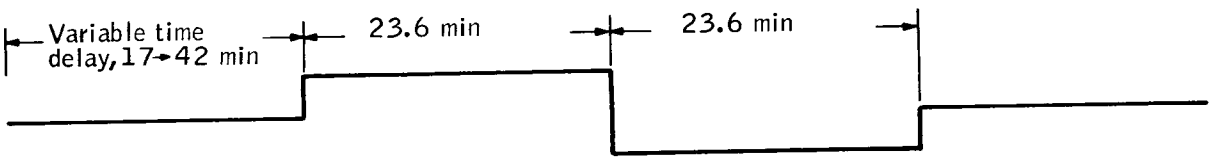

ACS attitude error correction sequence

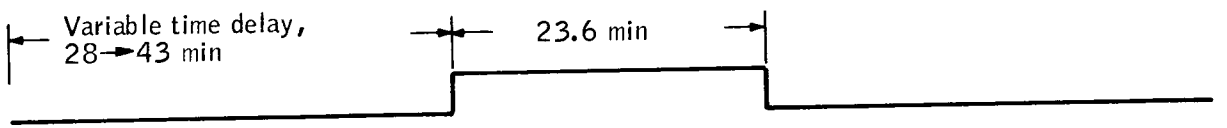

ACS spin control sequence

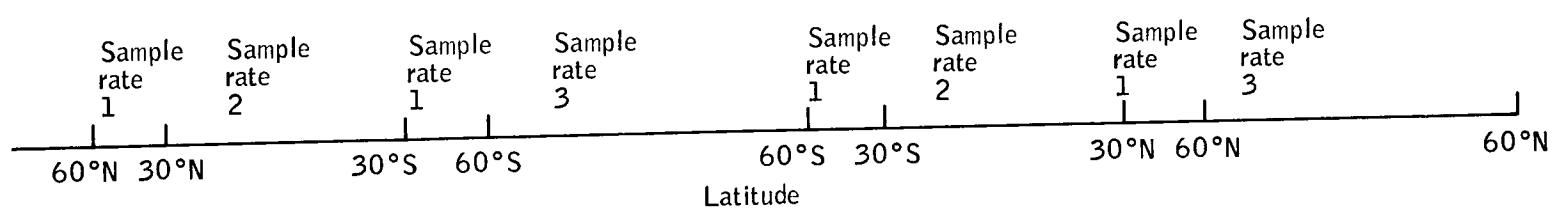

College, Alaska

Radiometer profile sampling sequence

Figure 9. Altitude Control Programmer Sequences

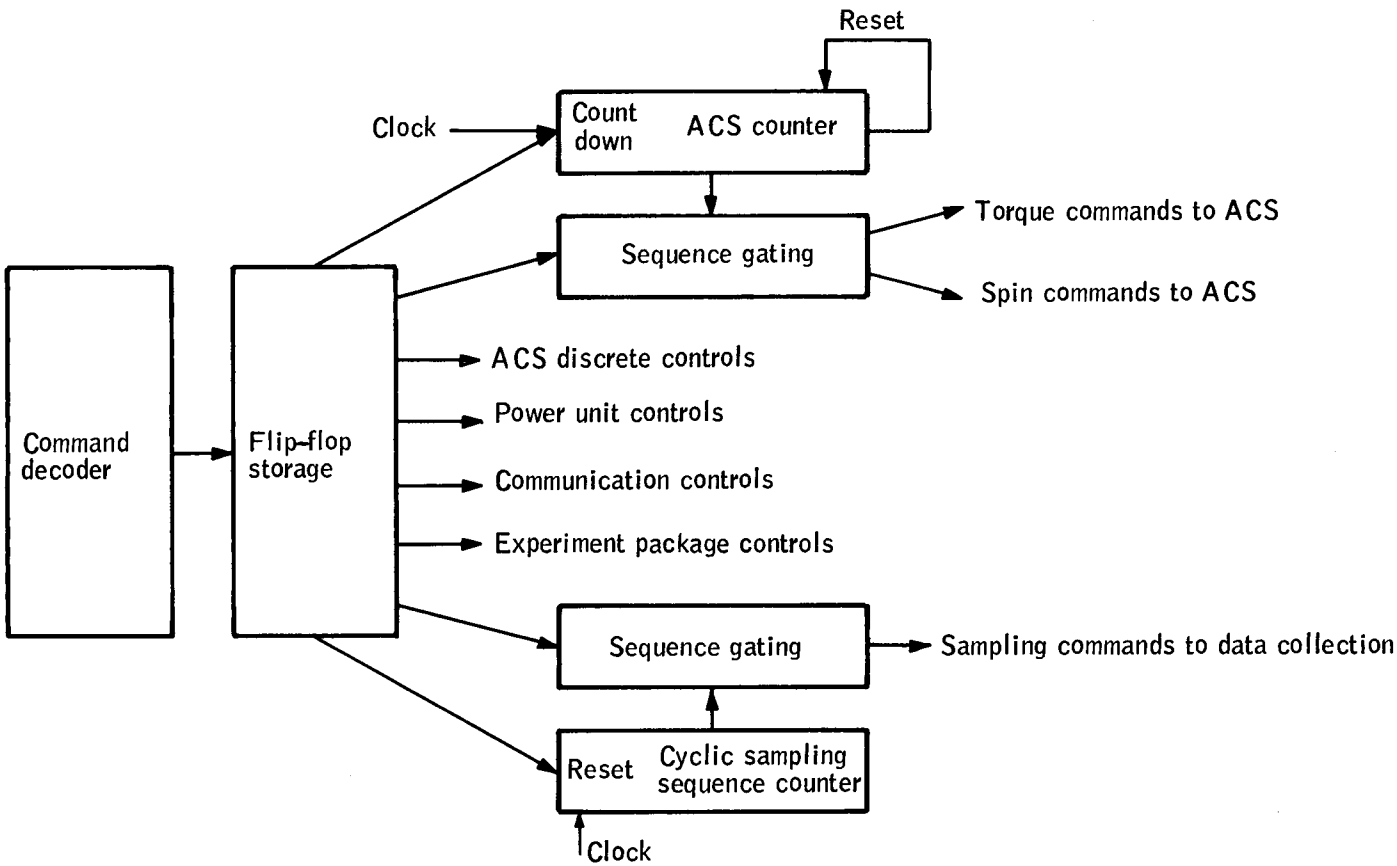

Figure 10. Programming Unit Block Diagram

The ACS sequence requirements were defined in the previous section. A relatively simple mechanization can be used to achieve these requirements. A binary countdown counter, started at a count of 360 and counting 15 sec clock pulses, will provide the timing for the sequences through an orbit. A typical approach for programming the ACS attitude error correction is shown in Figure 11. Eight ground commands listed in Table 7 are used for this program, with not more than three commands used for any one sequence. The first command selects one of five time delays, the second command selects high torque (low torque selected automatically), and the third command starts the sequence and selects positive or negative polarity. The counter on start counts from "360" to "0" in 90 min, then on "0" resets itself and the flip-flops to await the next ground command. On prewired times, the selected torque command lines from the sequence gating come true. The time delay flip-flops select which set of prewired gates are used. With the use of five fixed time delays and a variation of ± 3 minutes on start of the sequence, the total time delay requirement of 17 to 43 minutes can be met. This requires that the ground station "start" command from College, Alaska, is transmitted within a specified 15 sec time interval over a 6 min range. This is possible and feasible on nearly all station contacts with the Alaska station.

The spin control sequence is generated in the same manner as the attitude error-correction sequence. A total of five commands, including three time delay commands, are required for this sequence. The same countdown counter can be used for both ACS sequences with an insignificant decrease in program flexibility. In general, both of these sequences will be operated at the same time to reduce loss of data during vehicle torquing.

An analysis of data requirements has shown that the horizon has more variability in the winter hemisphere than in the summer hemisphere. For this reason, if data must be lost during torquing, it seems preferable to lose it in the summer hemisphere. The sequencing shown in Figure 11 is for torquing in the Southern Hemisphere. By adding one bit to the countdown counter and one ground command to allow resetting the counter to either 360 or 720, the torquing sequence can be operated in either hemisphere. An alternate approach requiring no additional hardware would merely use a station in the Southern Hemisphere, such as Orroral, Australia, or Johannesburg, S. Africa, to initiate the sequence command rather than the College, Alaska, station. This then shifts the torquing sequence into the Northern Hemisphere. Either of these stations can be contacted on approximately 5 of 15 orbits which should allow sufficient flexibility for the ACS torquing program. This approach is recommended because no additional hardware is required and it reduces the utilization of the College station.

As can be seen in Figure 9, the radiometer profile sampling sequence is cyclic, repeating every half orbit. The sequence outputs are at fixed vehicle positions in the orbit. Along with the variable profile sampling rate, two other functions require sequencing as a function of vehicle position and can use the same basic programming, although repeating only at the orbital period. These are selection of space-to-earth or earth-to-space profiles to minimize sun and moon interference and selection of starmapper or sun sensor to provide attitude determination data.

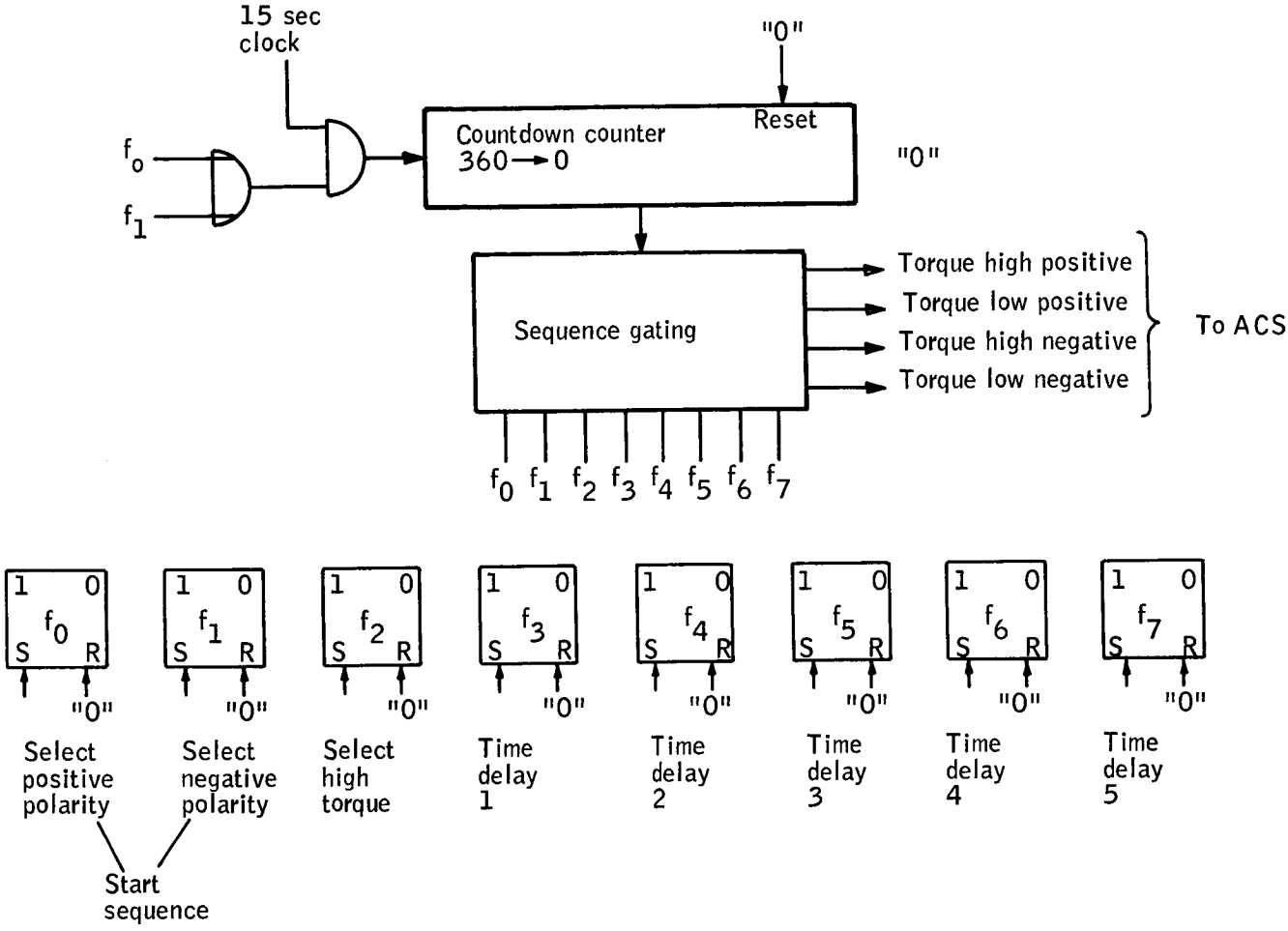

Figure 11. ACS Attitude Error Correction Program

A general approach for setting up sequences of this type is shown in Figure 12. It consists of a fine resolution adjustable "vernier" counter and a coarse resolution countdown counter with sequence gating. The sequence has been set up with the basic parameter being time. An alternative could be to count vehicle revolutions and use the number of spins as the basic parameter. However, this would require a tighter control on spin rate than presently planned and, for this reason, is not feasible.

Using time as the basic parameter, the orbital period must be accurately set into the programmer. Any error in the period accumulates from orbit to orbit and rapidly passes the 1 min (4 deg latitude) requirement discussed in the previous section. Using the coarse-resolution counter alone could accumulate as much as 16 sec error per orbit, exceeding the requirement in 4 orbits. In addition, the system can only be expected to hold a nominal orbital period of 94.6 min with a 3-sigma range of 93 to 96 min including launch errors and orbital decay. Thus, a completely prewired program sequence is not feasible.

By using what could be called a "vernier" correction adjustable by ground command, the basic sequence could still be made with a prewired program. The coarse counter is set to cycle in a "nominal" 46 min. The fine counter has a variable cycle range in one sec steps from 0 to 2 min. The total cycle can then be varied from 46 to 48 min in one sec steps. In initial setup, once the orbital period is determined, the up-down counter can be adjusted to within ± 1 sec by repetition of a ground command. This number is then transferred every cycle to the fine counter for countdown. In this case, at least 60 orbits would elapse before a 1 min time error in the sequence could accumulate. A ground reset command from one station, College, Alaska, for example, can be used to re-establish the zero point of the sequence and stop the error accumulation. After initial setup of the up-down counter, changing the period would occur only rarely and at most 1 to 4 sec at a time. A total of three ground commands are required to operate the program.

An alternative programming approach is to use the command system to send up actual timing words. For example, the total orbital period could be sent, stored in a register, transferred into a counter, and then cycled as described in the above paragraph. For the ACS sequences, the actual time delays could be transmitted, thereby saving some gating and allowing more flexibility. This could be done with the tone digital command system using approximately 12 of the commands to send a 12-bit binary word. Each command would set one bit in a register on the vehicle. When the total word is received, it is then routed to its functional location by the function commands. This approach is feasible; similar approaches have been used on Tiros and can provide more programming flexibility to the system at the expense of a more complex commanding and programming function. This technique has not been found to be necessary and is not recommended in the data handling concept.

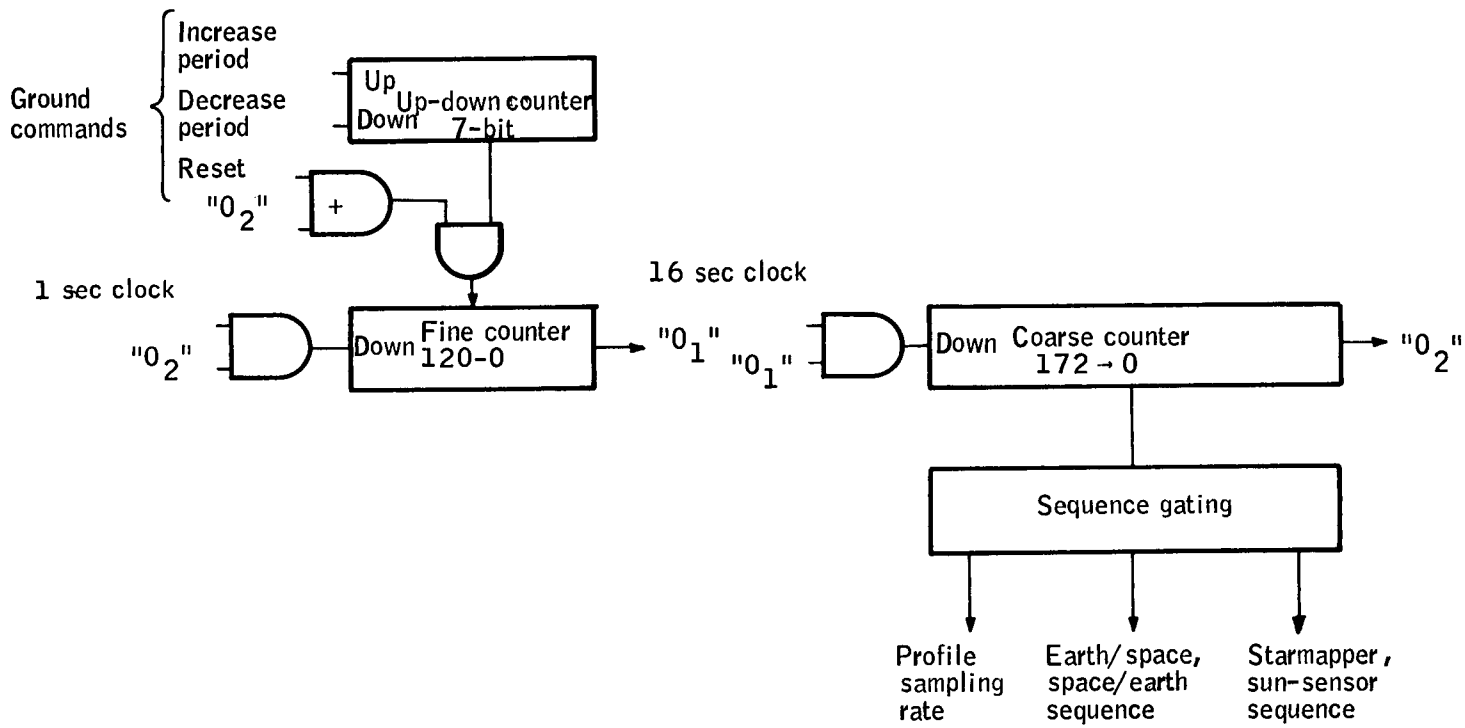

Figure 12. Data Collection Sequencing

Radiometer Data Collecting and Digitizing

Requirements. -- The basic accuracy requirements for the complete radiance measurement system are:

- Tangent height range (+80 km to -30 km)
- Instantaneous value of radiance measured must be assignable to a tangent height value to within ±0.25 km.
- Radiance characteristics and resolution
  - Maximum peak radiance = 7.0 W/m^2-sr
  - Minimum peak radiance = 3.0 W/m^2-sr
  - Maximum slope = 0.6 W/m^2-sr-km
  - Maximum slope change = 0.15 W/m^2-sr-km^2
  - Radiance magnitude resolution = 0.01 W/m^2-sr

The system error analysis has allotted a maximum tangent height error to on-board data processing timing of ±3 arc sec (corresponding to ±0.035 km tangent height at 500 km altitude). Separating this error into its component sources, the radiometer time sampling accuracy must be to ±26.7 μsec for the vehicle spinning at 3 rpm. The nominal radiance sampling rate must be greater than 3 kHz to meet the ±0.25 km resolution requirement.

The radiometer output range is from 0.01 W/m^2-sr to 7.0 W/m^2-sr with a minimum resolution element of 0.01 W/m^2-sr. This requires at least a 10-bit binary analog-to-digital conversion to meet the amplitude range and resolution requirement. The maximum slope detection requirement of 0.6 W/m^2-sr-km specifies the A/D converter minimum sampling resolution to be not more than 22.2 μsec.

The sampling quantity requirement for one profile is shown in Figure 13. A total of 440 samples are required from +80 to -30 km tangent height to define the profile with 0.25 km resolution. Ten samples from 1000 km to 160 km and 10 samples from 160 to 80 km are required to obtain a measure of the stray radiation entering from outside the radiometer theoretical field of view. A total of 6 samples, 4 calibration levels and 2 space readings, must be taken at a point in the revolution when the radiometer is viewing space at greater than 1000 km tangent height.

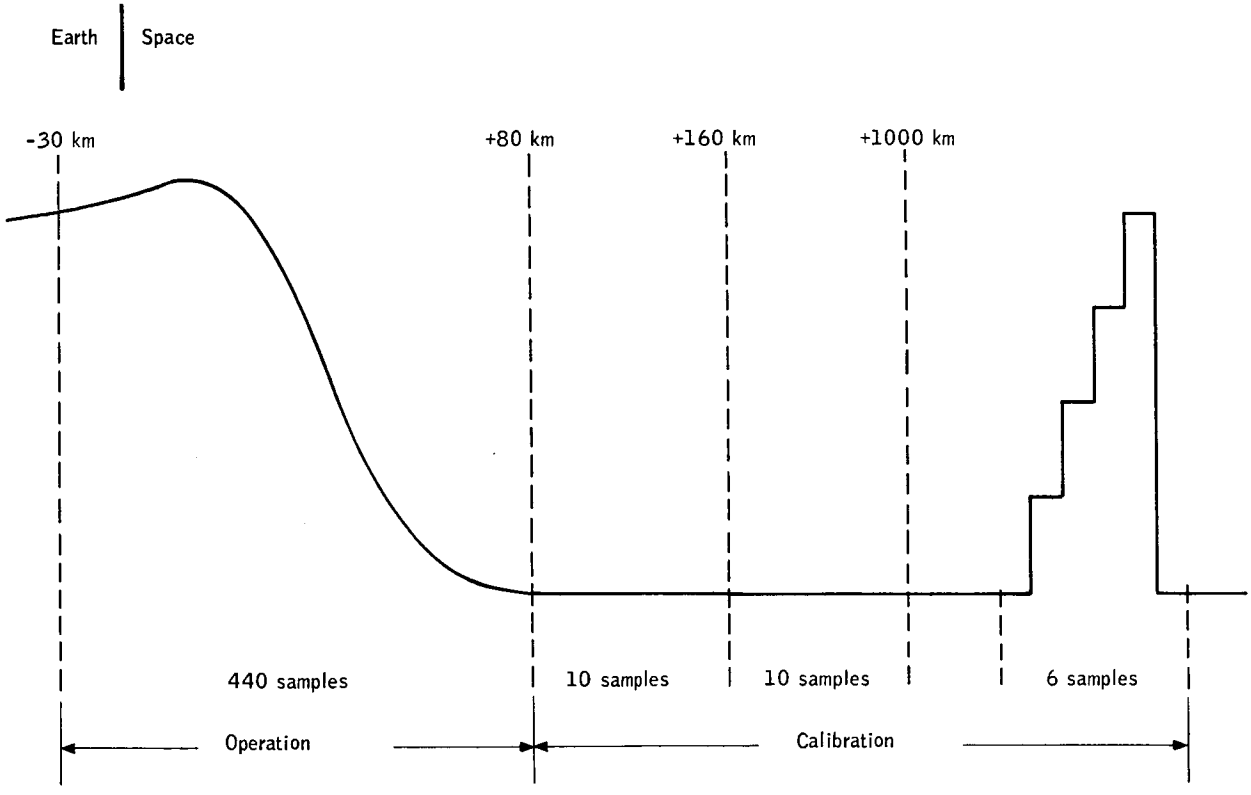

Figure 13. Profile Sample Requirements

The engineering set of profile recording requirements, as defined by Honeywell in the Part I study, are:

- "Uniform" time sampling in each space cell over each time cell, i.e., no more than two samples/space cell/day
- One-year continuous coverage
- 13 time cells (28 days/cell)
- 408 space cells
  - Latitude (60°S to 60°N) 320 cells
  - Latitude (60°N to 90°N) 44 cells
  - Latitude (60°S to 90°S) 44 cells
- Samples per cell
  - Latitude (0° to 60°) 16 samples
  - Latitude (60° to 90°) 38 samples
- Total samples for one year - 110 032

The above listed requirements specify an average profile sampling rate of 20 profiles/orbit on the vehicle, or approximately 0.22 profile/min. With the vehicle spinning at 3 rpm in the present concept, profiles are being sensed by the radiometer at a considerably higher rate than necessary to meet the basic set of requirements.

A recommended set of data requirements to more ideally meet the mission objectives have been developed and are given below.

The recommended requirements for the HDS experiment, as defined by Honeywell, are:

- One-year continuous coverage.
- Maximum of 10° latitude separation between successive samples.
- 13 time cells (28 days/cell)
- 588 space cells
  - Latitude (30°S to 30°N) 128
  - Latitude (30°N to 60°N) 134
  - Latitude (60°N to 82.6°N) 96
  - Latitude (30°S to 60°S) 134
  - Latitude (60°S to 82.6°S) 96

- Average number of samples per cell
  - Latitude (30°S to 30°N) 45
  - Latitude (30°N to 60°N) 39
  - Latitude (60°N to 82.6°N) 67
  - Latitude (30°S to 60°S) 39
  - Latitude (60°S to 82.6°S) 67
- Total samples (one year) 378 508

The effect of the recommended data requirements on mission objectives are described in more detail in Appendix A. The primary penalty is an increased storage requirement on the vehicle as described previously. These requirements specify an average profile sampling rate of 68 profiles/orbit on the vehicle. A variable sampling rate, where profiles are recorded at 1 profile/min, 0.75 profile/min, or 0.428 profile /min as a function of latitude, is required to meet optimally these requirements.

Radiometer data collection concept. -- The functional diagram of the radiometer digitization unit is shown in Figure 14. It consists basically of an analog-to-digital converter, a horizon tracking device, and the sequence control circuitry.

The A/D converter will be a minimum of 10-bits binary in length to meet the resolution and range requirements specified in the preceding section. An up-down counter with a basic counting clock of approximately 45 kHz is used to track continuously the radiometer output at speeds sufficient to follow the maximum required slope. The use of an up-down counter reduces the need for high-speed circuits which would be required if a complete measurement had to be made for each sample.

The nominal sampling rate for a vehicle spinning at 3 rpm based on samples every 0.25 km would have to be approximately 3 kHz. At the present time, the nominal spin rate of the vehicle is 3 rpm with its range held to ±5 percent. The tight range was specified to hold the extra samples taken on a profile to a minimum. For example, 440 samples are required across the +80 to -30 km profile at 3.15 rpm. At 2.85 rpm and the same sampling rate, 485 samples are required to cover the range of +80 to -30 km. This is higher resolution at the low spin rate than required and, thus, costs 10 percent more in storage space on the vehicle. Increasing the spin rate range to ±10 percent would increase storage by 20 percent. To meet the 0.25 km sampling requirement at 3.15 rpm spin rate requires an actual sampling rate of approximately 3.15 kHz.

To hold the spin rate of the vehicle to ±5 percent will require re-adjustment approximately every 125 orbits and will lose approximately one-half orbit of data. At the minimum spin rate of 2.85 rpm, this will correspond to 34

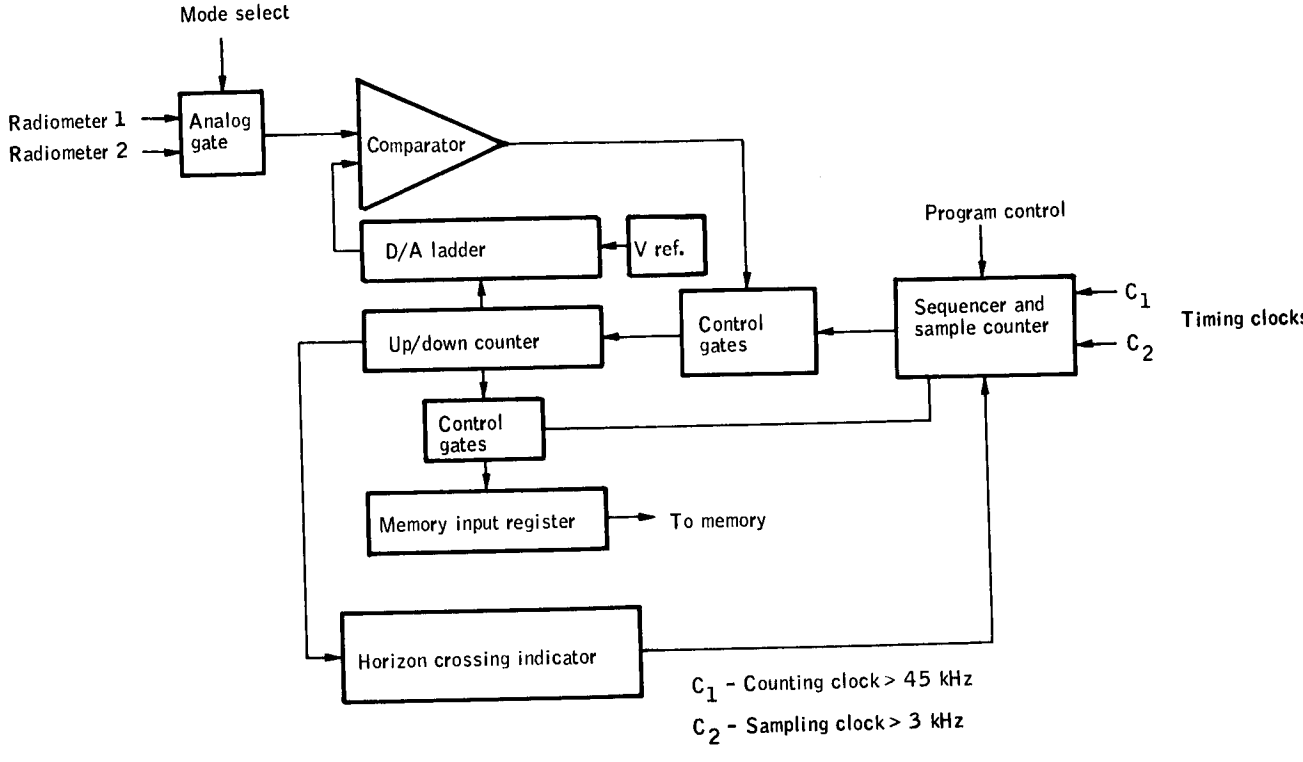

Figure 14. Radiometer Data Collection

profiles lost. Allowing the spin rate to drop below 2.85 rpm is not critical and may be desirable at times to prevent the 1/2 orbit of lost profiles. If the spin rate is not corrected, samples are lost at the -30 km end of the profile, but higher resolution is obtained over the upper portion of the profile. If the spin rate is not corrected, it should be pointed out that profiles are still being lost because profile generation and recording are synchronized with vehicle revolution. For example, assume at 2.85 rpm a minimum of 65 profiles per orbit are taken. If the spin rate decreased to 2.5 rpm, only 57 profiles per orbit are taken resulting in a loss of 8 profiles per orbit. At 2.8 rpm, approximately 1 profile per orbit is lost.

On a spinning vehicle of this type, the sensors are scanning areas of interest only over parts of each revolution. The radiometer is scanning the horizon on less than one percent of each revolution, and the starmapper is scanning the celestial sphere for approximately one half of each revolution. To locate these areas of interest for data collection, the radiometer can be used as a horizon threshold sensing device. The horizon crossing indicator measures vehicle spin period by counting time pulses between the thresholds from the radiometer. With the spin period known and detection of the horizon threshold point, control for functions during any part of the revolution can be generated. The threshold detector is a simple gate, detecting when the A/D converter is above or below a certain level. This threshold can be selected at a tangent height of approximately 50 km or amplitude of 1 W/m^2 -sr. The variation in position of this threshold will be less than ±5 km tangent height as determined in Phase A, Part I studies.

As discussed in the previous requirements section and in Appendix A, the profile collection rate should be variable. Dependent on latitude, every third, fourth, or seventh profile should be recorded. A revolution counter can be used to count the space-to-earth thresholds and with the previously described sequence generated by the programmer unit, determine the profiles to be recorded. A horizon tracking counter provides the logic for predicting the location of the horizon. At the beginning of the revolution prior to recording, the horizon tracking counter is set to "zero"; timing pulses are then counted up between the thresholds on that revolution. On the recording revolution, the counter counts down from the number compiled in the previous revolution. The time required to count back down to "zero" predicts the revolution period (time of occurrence of next threshold). The "zero" reading corresponds to 50 km tangent height if the least significant bit of the count represents 0.25 km. Then on the tenth revolution, detection of the number 140 will correspond to 85 km tangent height. This can then be used to start sampling on the profile. Detection of specific numbers on this counter as it counts down can be used to control the calibration sequence and all of the profile sampling timing, including counting the number of samples to be taken on the profile.

To assure that at least 440 samples are taken across +80 to -30 km tangent height with a spin-rate variation of ±5 percent and horizon location uncertainty of ±5 km, at least 525 samples on each profile are required.

An estimate of 550 samples per profile is included in the data budget to allow for possible additional uncertainty in the radiometer calibration.

The horizon tracking counter will provide a measure of vehicle spin period to an angular accuracy of approximately ±3.6 arc min. This will be read out as part of the spacecraft status data and will be used on the ground to determine spin updating time.

The present radiometer concept requires that for part of each orbit, when the sun interferes with the reading of the space-to-earth horizon, recording of the earth-to-space horizon will be done. This will require detection and use of the 50 km threshold on the earth-to-space profile to control the horizon tracking counter and another set of gates to control the sampling sequence.

The data requirements specify that the maximum profile sampling rate is every third profile. Thus, it will be relatively simple by ground command to take profiles at a higher rate over interesting regions on the earth simply by recording every other profile or every profile. This requires a higher number of ground contacts to transmit the memory contents than the once per orbit which the general system concept calls for but is possible on many orbits. To record every profile requires that two counters be used to track the horizon, one for counting up each revolution and transferring its value to the second counter to count down each revolution. The two counters are presently included in the concept to provide continuous sequence control for the starmapper and sun sensor. Thus, every profile recording can be done if memory space is available.

Attitude Determination Data Collecting and Digitizing

Requirements. -- The present system concept includes a starmapper as the primary attitude determination device with a sun sensor as a secondary unit to provide attitude data over the portion of each orbit when the satellite is exposed to the sun and the starmapper can not be used.

Starmapper data collection requirements: The starmapper consists basically of a 3-slit device which provides a pulse output each time a slit scans across a star. It is a passive device mounted on the rim of the wheel configuration with scanning action created by vehicle rotation.

Data from at least three stars is required each revolution of the vehicle during the satellite dark period (approximately one-third orbit). Data recording should be done for up to six stars per revolution allowing a safety factor of two for noise and minimum spacing between stars. The data recording for each star must consist of three time interval measurements to the three pulses occurring from the three slits, the three transit times of the star across the three slits (pulse width), and a measurement of the amplitude threshold. Timing must be to an accuracy of ±26.7 μsec.

An automatically variable threshold detection level is required to select the six brightest stars per revolution. Studies show that the threshold detection level should vary from 3.5 magnitude to 2.5 magnitude over one orbit to do this. If a fixed threshold of 3.5 magnitude were used, the number of stars observed per revolution would vary from 4 to 25 over one orbit. This would significantly increase the storage requirements.

Sun-sensor data collection requirements: The sun sensor consists basically of a 2-slit device which provides an output as each slit crosses the solar disc. This unit is also a passive device with scanning action created by vehicle rotation.

The data output from the sun sensor consists of measurement of the time of occurrence of each slit passing onto the sun and again off of the sun. Thresholding time accuracy must be to ±26.7 μsec on each event. The sun sensor outputs will be recorded at all times when the sun is in view of the spacecraft (approximately two-thirds orbit).

Concept. -- The present functional concept of the starmapper and sun sensor digitizing is shown in Figure 15. Digitizing the starmapper outputs requires a variable threshold unit, a squaring amplifier, a time register for recording precision timing of the star-pulse leading edge, and a star transit time or pulse-width counter. The sun-sensor pulse will have sharp, well-defined leading and trailing edges and can be used with minor amplification to drive the time gating. In the present concept, the time of occurrence of the crossing of both edges of the sun with each slit will be recorded.

A more detailed starmapper digitizing concept is shown in Figure 16. The star counter counts the number of stars observed each vehicle revolution. If the number is greater than 6 (18 pulses), the variable threshold is increased 1 step (16 step levels are provided) for the next revolution and decreased if the number is less than 6. The starmapper viewing region on the celestial sphere changes very slowly from one revolution to the next. Thus, this technique should assure the threshold is set to pass the six brightest stars each revolution with occasional excursions to 5 or 7 stars.

The differential amplifier and Schmitt trigger are used to amplify and square the resulting star pulse passing above the threshold. The leading edge of the pulse is used to gate the system time from the timing unit into the time register. The time word entered is to a resolution and time accuracy of ±26.7 μsec, corresponding to less than ±3 arc sec angular error. The transit time counter starts counting clock pulses from the timing unit on the leading edge of the pulse and counts to the trailing edge providing a measure of the pulse width. The transit time measurement provides a measure of the magnitude of the star and the location of the center of the star pulse. When the trailing edge of the pulse is sensed, the words in the time register, the transit time counter, and the magnitude counter are transferred to storage.

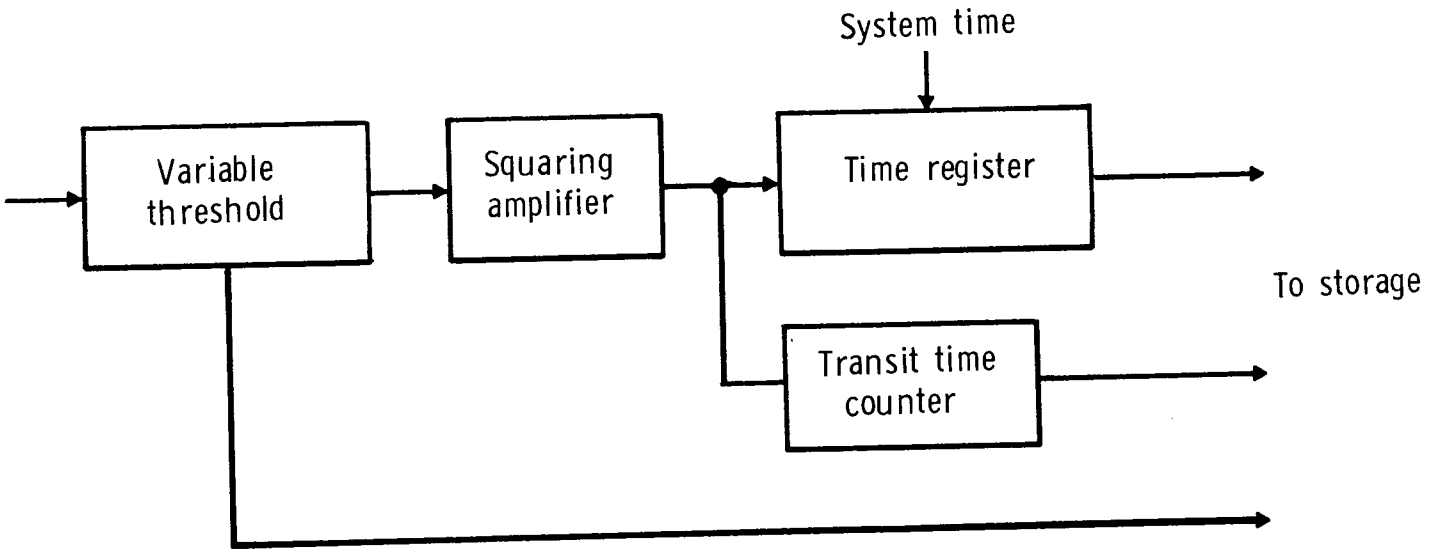

Figure 15. Starmapper/Sun Sensor Time Intervals and Star Transit Times

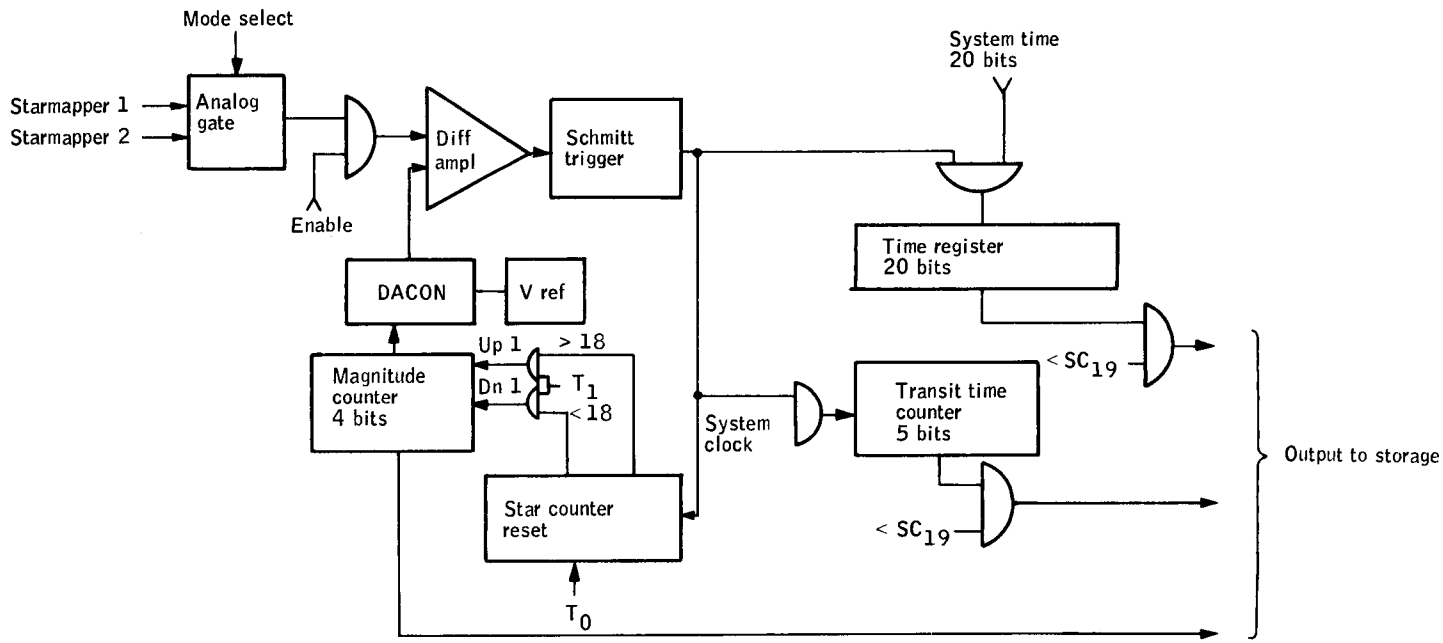

Notes:

1. Enable set for desired segment of revolution
2. T_0 = leading edge of enable
3. T_1 = trailing edge of enable

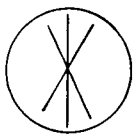

Slit pattern

Figure 16. Starmapper Digitizing Concept

The starmapper can operate for approximately 1/3 orbit while the vehicle is in the earth's shadow. The selection of starmapper or sun-sensor output can be made by a fixed sequence, adjustable by ground command, from the programming unit. The fixed sequence can be used because the vehicle is in a sun-synchronous orbit, and the shadow region will vary only slowly from the same location in the orbit as the earth precesses about the sun.

The starmapper mounted on the rim of the wheel will see the earth each revolution and would generate erroneous readings if recording of the data were done during this time. The radiometer will be used to track the earth horizon. From this tracking device and the location of the starmapper with respect to the radiometer, the recording of the starmapper data can be controlled to the actual space scanning portion of each revolution.

The possibility exists, in certain cases with the thresholding technique, that all of the six brightest stars taken each revolution are in a closely spaced region in the sky and would not provide a solution to the attitude problem. In general, this should not be a problem since three stars properly spaced in one revolution or two stars repeated on three revolutions are sufficient, in most cases, for solutions. The total of six stars are being taken to provide smoothing and assurance that at least three of the stars are properly spaced. If further analysis indicates that this is still a problem, two approaches can be taken. First, the limit of six stars recorded per revolution could be increased to provide a higher probability of at least three of the stars having proper spacing. The second approach is to include additional circuitry on the vehicle to detect the high density star areas, to insert time gating to record only one or two stars from these areas, and to override the automatic threshold to admit weaker stars in other regions of the revolution. Either approach is feasible; however, significant additional hardware or storage space is required, and these approaches should not be included in the concept unless further analysis indicates a requirement.

The present starmapper data output estimate, based on a three rpm spin rate and recording every revolution for one-third orbit, is 43 710 bits per orbit.

The sun sensor digitizing is relatively simple in that a strong signal output will be available. A diagram of the unit is shown in Figure 17. The time register and transit time counter are similar to those used in the starmapper digitizing circuit shown in Figure 16 and could be the same hardware; if redundancy is required, two units could be constructed to work interchangably. In this case, the angular transit time of the sun across the slit is approximately 30 arc min, whereas the star pulses are approximately 1 arc min. A transit time counter of 10-bits binary is required for the sun transit measurement.

The sun sensor is a 2-slit device. Thus, on each revolution, two sets of time intervals must be recorded. Based on recording the sun sensor outputs every revolution for two-thirds orbit and including revolution time labeling, the estimated data output is 16 920 bits per orbit.

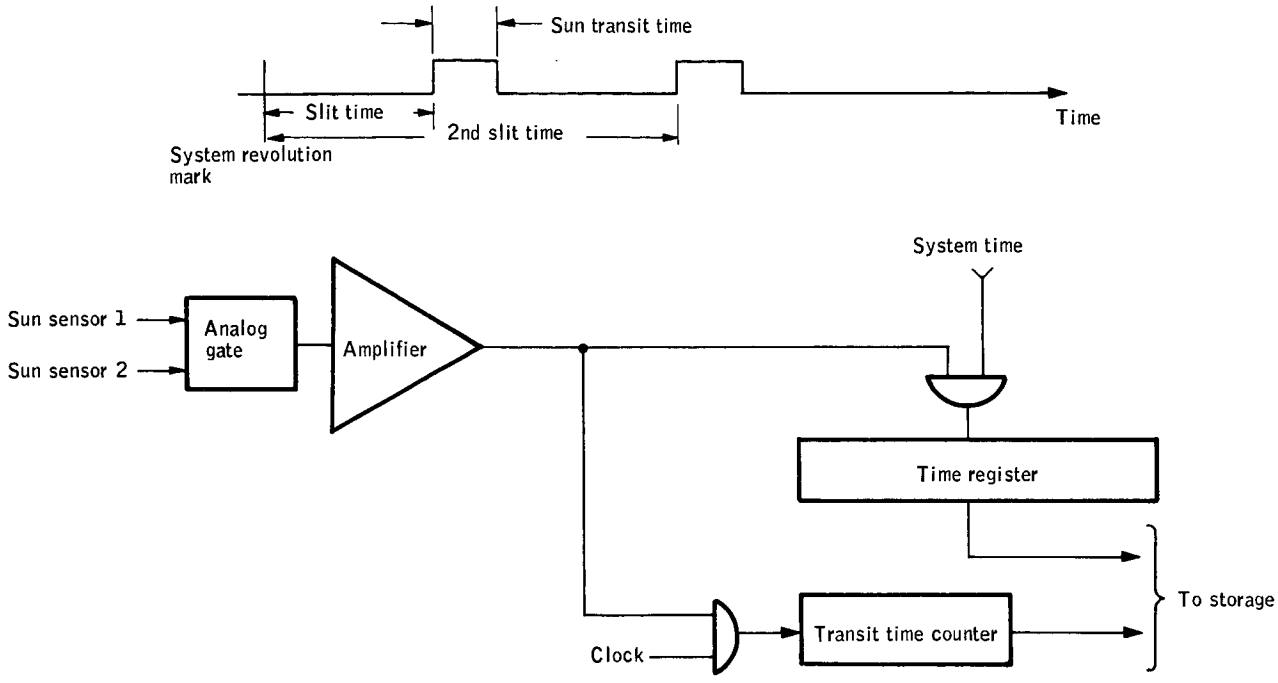

Figure 17. Sun Sensor Digitizing

Spacecraft Status Data Collection Unit

Requirements. -- The spacecraft status (housekeeping) outputs are defined as all data generated on the vehicle other than the experimental radiance and starmapper/sun-sensor attitude determination outputs. The status outputs are used on the ground primarily for quick-look analyses of the subsystem operations for generation of mode change (failure correction) and operational commands to the vehicle. A comprehensive set of status data can also be used to pinpoint failures such that possible corrections can be made to the succeeding flight units.

A list of the status points to be monitored in the vehicle is given in Table 9. This list is included to show the typical types of test points and cannot be considered final at this stage of system design. A total of 181 test points are listed. Approximately one half of these are discrete on-off type check points.

TABLE 9. - STATUS TEST POINTS

Source	Type	Quantity	
Structures			
Temperatures			
Cold compartment	Analog	2	
Warm compartment	Analog	2	
		4	
ACS			
V-head sensor # 1 output-on/off	Discrete	1	
V-head sensor # 2 output-on/off	Discrete	1	
Attitude correction coil-current level	Analog	1	
Residual control coil-current level	Analog	1	
Spin control coil-current level	Analog	1	
V-head sensor logic output-roll angle	10-bit binary	1	Recorded
Damper on-off	Discrete	1	
PowerACS on-off	Discrete	1	
Redundant V-head sensor on	Discrete	1	
Redundant logic on	Discrete	1	
		10	

TABLE 9. - STATUS TEST POINTS - Continued

Source	Type	Quantity
Power		
Terminal voltage - battery no. 1	Analog	1
Terminal voltage - battery no. 2	Analog	1
Temperature - battery no. 1	Analog	1
Temperature - battery no. 2	Analog	1
Charge current no. 1	Analog	1
Charge current no. 2	Analog	1
Array voltage	Analog	1
Array current no. 1	Analog	1
Array current no. 2	Analog	1
Array current no. 3	Analog	1
Array current no. 4	Analog	1
Array current no. 5	Analog	1
Array current no. 6	Analog	1
28 volt bus no. 1	Analog	1
5 volt bus no. 1	Analog	1
28 volt bus no. 2	Analog	1
5 volt bus no. 2	Discrete	1
Radiometer no. 1 power	Discrete	1
Radiometer no. 2 power	Discrete	1
Starmapper no. 1 power	Discrete	1
Starmapper no. 2 power	Discrete	1
VHF transmitter power	Discrete	1
S-band transponder power no. 1	Discrete	1
Beacon transmitter power	Discrete	1
S-band transponder no. 2 power	Discrete	1
Radiometer calibration power	Discrete	1
Sun sensor no. 1 power	Discrete	1
Sun sensor no. 2 power	Discrete	1
		28

TABLE 9. - STATUS TEST POINTS - Continued

Source	Type	Quantity	
Radiometers			
Mounting pad temperatures	Analog	3	
Primary mirror temperatures	Analog	4	
Relay lens temperatures	Analog	1	
Telescope temperatures	Analog	8	
Cooler temperatures	Analog	4	
Detector temperatures	Analog	2	
Field stop temperatures	Analog	2	
Power supply voltage	Analog	2	
Power supply current	Analog	2	
Calibration level	Analog	2	Recorded once per profile recording
Calibration source current	Analog	4	
Calibration source voltage	Analog	4	
Calibration source temperature	Analog	4	
Detector bias current	Analog	2	
Detector bias voltage	Analog	2	
Chopper frequency	Analog	2	
		48	
Starmapper-sun sensor			
High voltage no. 1	Analog	1	
High voltage no. 2	Analog	1	
Low voltage no. 1	Analog	1	
Low voltage no. 2	Analog	1	
Temperature no. 1	Analog	2	
Temperature no. 2	Analog	2	
		8	
Data Handling			
Command reception responses	Discrete	58	
Spin period	13-bit binary	1	
Power supply voltages	Analog	4	
Package temperatures	Analog	4	

TABLE 9. - STATUS TEST POINTS - Concluded

Source	Type	Quantity
Register overflow checks	Discrete	4
A/D converter calibration checks	10-bit binary	4
		75
Communications		
Squelch control voltage	Analog	1
Transmitter power output voltages	Analog	4
Command receiver AGC	Analog	1
Crystal oven temperatures	Analog	2
		8
	Total points	181

A total of 17 test points, 1 in the ACS unit and 16 in the radiometer unit, must be monitored and recorded on the vehicle. These points should be recorded with each radiance profile. The remaining test points can be measured only on ground command and transmitted directly to the telemetry stations.

Sampling accuracy requirements on the test points are not greater than ± 1 percent, except on the test points where digitization is performed at the source. Spin period and roll angle status data will be digitized to 13-bit binary and 10-bit binary in the data handling and ACS units, respectively. For all other measurements, a 7-bit binary analog-to-digital converter can be used.

Concept. -- The spacecraft status data collection functional block diagram is shown in Figure 18. The present recommended concept is to record only status data necessary for scientific data analysis or required data generated at locations remote from the telemetry stations. All other status data will be measured and transmitted directly at the telemetry stations. For this reason, the functional diagram shows essentially two sequences of operation.

Each time a profile is recorded from the radiometer, multiplexer no. 1 will be stepped through its 19 input test points. The measurements will be made, transferred into storage, and read out as part of the normal telemetry transmission.

On ground command over the telemetry stations, multiplexer no. 2 will be stepped through its inputs, the measurements made, and transmitted directly in PCM code on the vhf beacon transmitter. Multiplexer no. 1 inputs can be also read and transmitted directly at this time if quick-look examinations of these points on the ground is required.

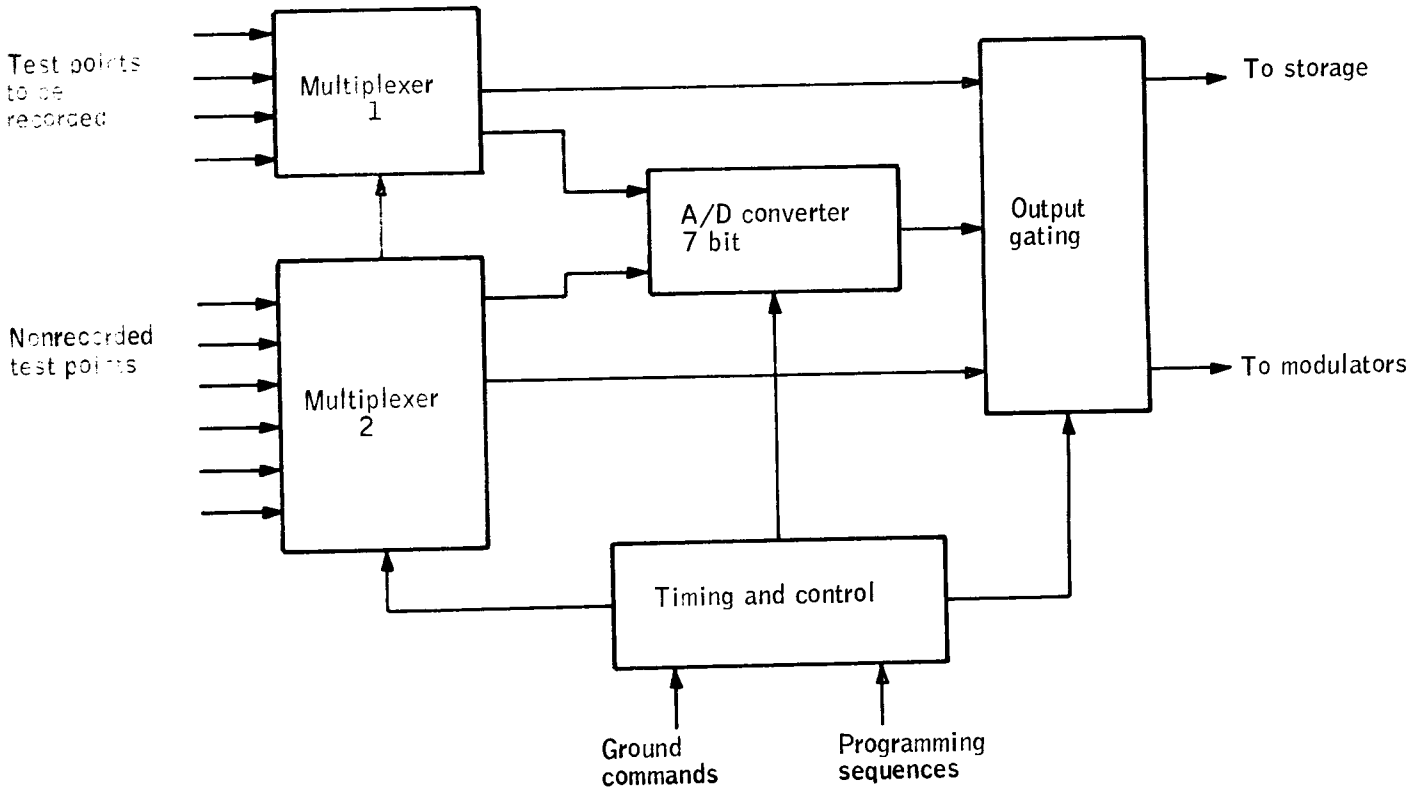

Figure 18. Spacecraft Status Data Collection Functional Diagram

Many of the test points are discretes or are digitized at the sensor. These points bypass the A/D converter and are organized into standard format words in the output gating.

An estimated maximum total of 16 320 bits per orbit of status data will be recorded on the vehicle. This is approximately three percent of the total vehicle storage requirement.

On some of the test points not presently being recorded, it may be desirable to include an alarm system where the points are periodically checked or checked when failure indications occur. Recording will then be done only if the test value has exceeded its operating range. This approach has not been included in the present concept. It can be included if further analysis indicates that certain critical points should be monitored for intermittent failures. For example, it may be desirable to check temperatures throughout the orbit to verify they do not exceed the tolerances. If the tolerance was exceeded, that reading could be recorded.

Memory System

Requirements. --

Size: The memory storage size is based on the data requirements budget previously defined. Based on the concept of a maximum storage time of one orbit (94 minutes), the storage size needed to meet the minimum budget is approximately 210 000 bits. The storage size required to meet the recommended data budget is approximately 515 000 bits. The total data from each budget is itemized in Tables 5 and 6.

Input data rates: In the present system concept, data is not required continuously from any sensor. With the three rpm spinning-wheel configuration, the radiometer scans the horizon of interest in approximately 150 msec, and the starmapper can only be producing data for approximately one half of each revolution. In addition, the maximum sampling rate for horizon profile recording is one profile per three revolutions, and starmapper data may not be required for each revolution. Therefore, it appears feasible to consider the memory system concept as receiving input data from essentially one sensor at a time. This serves to minimize the memory input buffering requirements and yet does not place a severe constraint on the system. The maximum input data rate to the memory occurs from the radiometer. As the horizon is swept out, radiance amplitude samples of a minimum of 10 bits in length will be taken at 0.25 km intervals of resolution. At a maximum vehicle spin rate of 3.15 rpm, the horizon tangent height from +80 km to -30 km is swept out in 139.5 μsec. The time between samples is 317 μsec requiring a sampling rate of 3.15 kHz. At 10 bits per sample, the output bit rate is 31.5 kbits per second for periods of approximately 140 msec.

The starmapper input to the memory consists of a maximum of 18 30-bit words per vehicle revolution. The words are generated at quasi-random times over one half the vehicle revolution (approximately 10 sec time). The starmapper cannot discriminate star pulses separated by less than 1 arc min (940 μsec at 3 rpm). Thus, the maximum bit rate required from the starmapper is 32 kbits per second. The maximum required bit rate from the sun sensor is less than from the starmapper but can be made the same for hardware simplification.

Spacecraft status and radiometer calibration data can be taken and recorded at speeds lower than listed above. These measurements can, in general, be made when neither the radiometer or starmapper is outputting data.

Output data rate: The memory system output data rate is based on a maximum storage of 515 455 bits and a two-minute telemetry transmission time at the STADAN stations. This requires an output bit rate of less than 4.3 kbits/sec.

Memory system concept. --

Selection of memory type: The present recommended data storage requirement is 515 000 bits and the minimum requirement is 210 533 bits. The general requirements for the memory are basically that it is to be used as a buffer storage element with read-in occurring for up to 94 minutes and total read-out in two minutes during contact with the ground stations.

Several types of memory elements could be used for this system. Characteristics of typical units of one-megabit size are listed in Table 10. As can be seen, the power requirements for all of the solid-state units are very low because of the very low read and write speed requirements which allows for turning off of power between operations.

The laminated ferrite memory with metal-oxide-semiconductor (MOS) drive and sense circuitry has potentially the best characteristics of the memories listed. However, MOS circuitry is still in an early development state, as reflected by the long development time listed, and this approach is not recommended for this program.

Magnetic tape storage units have been used on many space programs with varying results. Its main advantages are high capacity, minimal development time, and low cost. Major disadvantages of tape for the HDS system are momentum disturbances during starting and stopping of the tape, requirement of buffer storage to uniformly feed data on the tape, and lower overall reliability. A solid-state memory unit has a lower rate of failure and does not have the definite wear-out time of a tape unit. At approximately one-megabit storage, the size, weight, power, and reliability characteristics of the tape units roughly become comparable to those of the solid-state units; thus, if the storage requirements should increase above one-megabit, the tape unit tends to become more feasible even with its associated momentum and buffering problems. Below one megabit, the complexity of the solid-state

TABLE 10. - ONE-MEGABIT MEMORIES

Memory elements	Size, $in.^3$	Weight, lbs	Power, watts	Development time
Laminated ferrite, MOS drive (RCA)	275	11.5	< 0.7	26
Laminated ferrite, integrated ckt (RCA)	400	14.5	0.7	20
Plated wire (Univac, Honeywell)	500	25.0	0.6	18
Ferrite core (Electronic Memories, etc.)	500	20-25	< 1.0	12
Magnetic thin film (Control Data)	400	21.0	< 4.0	15
Magnetic tape (Raymond Engrg. ,RCA, Leach, etc.)	500	8.0	2 record 7.5 play-back	6

systems decrease roughly as the square root of the capacity while the tape system characteristics remain roughly constant. In the range of 500 kilobits capacity, the solid-state memory units have clear advantages over the tape units.

Of the systems discussed, four are considered to be feasible for the requirements of this program: (1) laminated ferrite with integrated circuit electronics, (2) plated wire, (3) ferrite core, and (4) thin film. The general characteristics of these units for a 500-kilobit memory are shown in Table 11.

Based on the present state of the art of solid-state memories, it is recommended that a ferrite-core system be used for this program.

As can be seen in Table 11, it has comparable size, weight, and power characteristics to the other systems under consideration. The ferrite core unit is selected on the basis of development time (reflecting the present state of the art) and minimum circuitry for maximum reliability.

TABLE 11. - 500-KILOBIT MEMORIES

Memory elements	Size, cu in.	Weight, lbs	Power, watts, av	Development time, months
Laminated ferrite, integrated ckt (RCA)	240	9	< 1	20
Plated wire (Univac, Honeywell)	320	15	< 1	18
Ferrite core (Electronic Memories, etc.)	320	12-15	< 1.0	12
Magnetic thin film (Control Data)	240	13	< 4.0	15

Building a ferrite core memory of the size required here is well within the state of the art. Core memories ranging in size up to 200 000 bits have been used in space programs such as OAO, Lunar Orbiter, Pioneer, VELA Nuclear Detection Satellite, IRLS, and the Lunar Surface Magnetometer. Memories up to 500 000 bits have been produced for military avionics systems and memories of up to one megabit have been produced for commercial applications.

The other three systems lag the ferrite-core system considerably in development. Development of the laminated-ferrite system has not extended past the breadboard stage as yet. Several plated-wire systems are under development and near production but have not been flight proven. A 1.4-megabit plated-wire memory, near delivery under contract to NASA GSFC, should demonstrate feasibility of this type of system. Many thin-film memories of small capacity have been developed for space and military applications, but low signal levels from thin films with the associated noise and packaging problems have hindered the applicability of thin films to large (greater than 100 000 bits) memories. A thin-film memory of approximately 300 000 bits size presently being developed for a military avionics program may demonstrate that many of the problems associated within thin films have been solved.

The ferrite core system has more flexibility in its internal organization which will allow minimizing circuitry and interconnections, thereby maximizing reliability. The laminated-ferrite, plated-wire, and thin-film systems are all 2-wire two dimensional (2D) linear select devices. The ferrite-core system, by stringing additional wires through the cores, can also be organized into three dimensional (3D) and two-and-one-half dimensional (2 1/2D) coincident current devices. These organizations, by using the core itself for one level of decoding, can significantly reduce the total drive and sense circuitry requirements. Considerably more design analysis and specification of requirements will be required to determine the optimum internal organization of the memory system.

The ferrite core planes are produced by stringing individual cores on series of wires whereas the other systems are essentially batch produced to form a solid plane or stack. In the future, the batch-produced systems should be at considerably lower cost; however, at the present state of development all of the systems are estimated at roughly equivalent costs. The solid planes or stacks should be more reliable than the ferrite-core stacks purely because of the solid construction. However, in considering a memory system, the stack itself is highly reliable in comparison to the associated electronics and does not contribute significantly to the system reliability. The problems of packaging the ferrite-core stacks to meet reliability, shock, and vibration requirements for the HDS system have been solved.

Memory organization: A detailed organization of the memory unit for this system will require significantly more analysis than was done in the feasibility study conducted in this phase. A functional diagram of the memory system is shown in Figure 19.

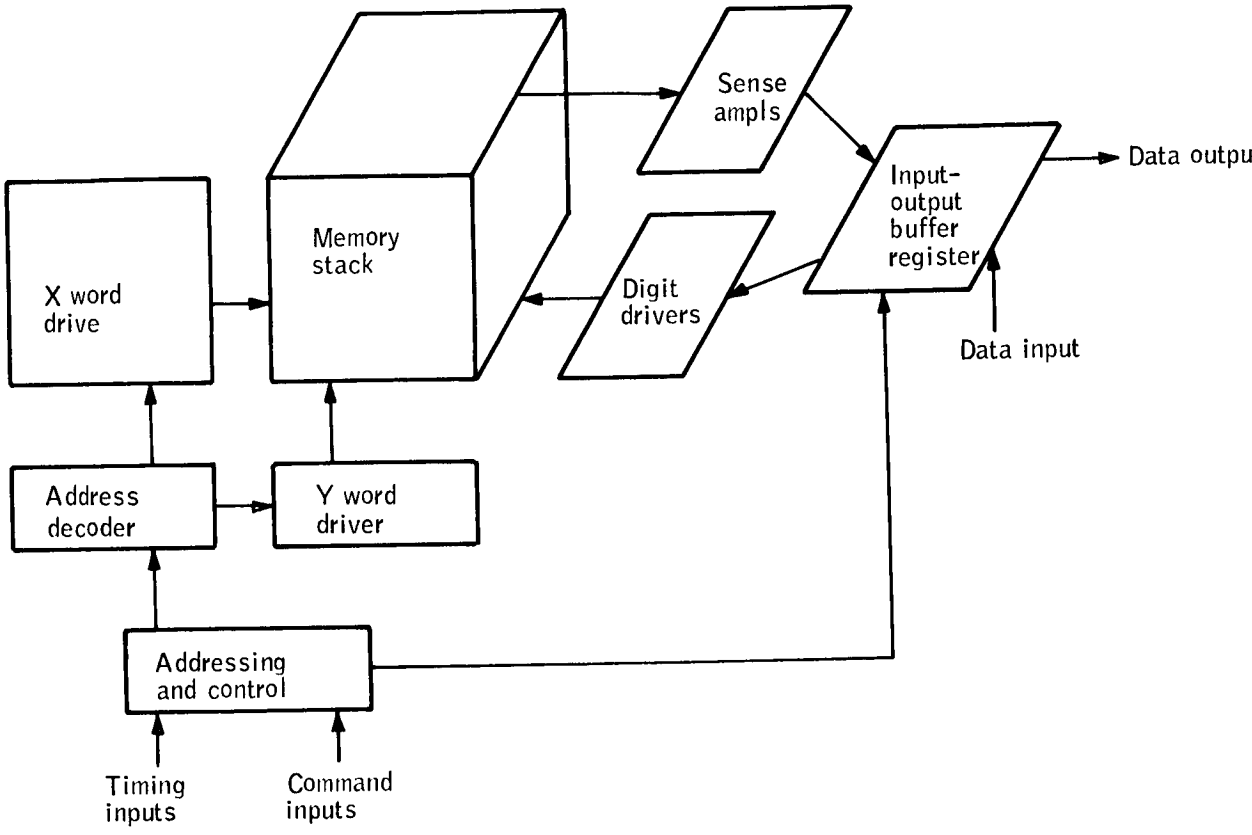

Figure 19. Memory System Functional Diagram

It consists of an addressing and control unit, decoders, word and digit drivers, sense amplifiers, and an input-output buffer register.

The three most common memory organizations are shown in Figures 20, 21, and 22 with the relative advantages of each shown in Table 12. With the ferrite-core memory element, any of these organizations can be achieved. Another organization (not shown), which may be possible because of the low speed requirements, is with the memory stack in one large plane with all addressing serial such that only one sense amplifier is required. The selection of the optimum memory organization must be based on an analysis of the input-output speed, power, and word-size requirements and an analysis of the reliability of each of the circuits or components required in the memory. With this approach, the most reliable organization can be selected.

The memory stack is highly reliable, the primary problem being the drive and sense electronics around the stack. In the design of the memory system, all attempts should be made to avoid or reduce the possibility of catastrophic failures to the system. For example, in some memory systems magnetic addressing circuitry is used in which failures in any drive line can cause halting of the address counters and therefore a catastrophic failure. This can be avoided by using different addressing circuitry or by forcing the counters past failed points. The failure is then reduced to loss of a block of data in the memory or to one erroneous bit in certain output words with the possibility of correction of the data on the ground.

Redundancy may be used on critical components. For example, redundant sense amplifiers or an increased number of sense amplifiers could be used such that a failure would cause no loss of data or would affect a smaller block of the output data. Quadded diodes could be used in the decoding and drive lines at critical points. By using internal redundancy at critical points and organizing the memory such that failures cause primarily small blocks of data loss, it should not be necessary to use totally redundant memory units on the vehicle.

Output Formatting

Requirements. -- The primary requirements for formatting of the data prior to transmission are to be compatible with the STADAN system to enable reliable acquisition and reduction of the data from the spacecraft on the ground. The STADAN Pulse Code Modulation Telemetry Standard is reproduced in Appendix C.

The key format and compatibility requirements applying to this data handling system are listed here.

1. Serial binary coding shall be used.

2. Maximum transmission bit rate shall be not more than 20 000 bits/sec (maximum Minitrack capabilities).

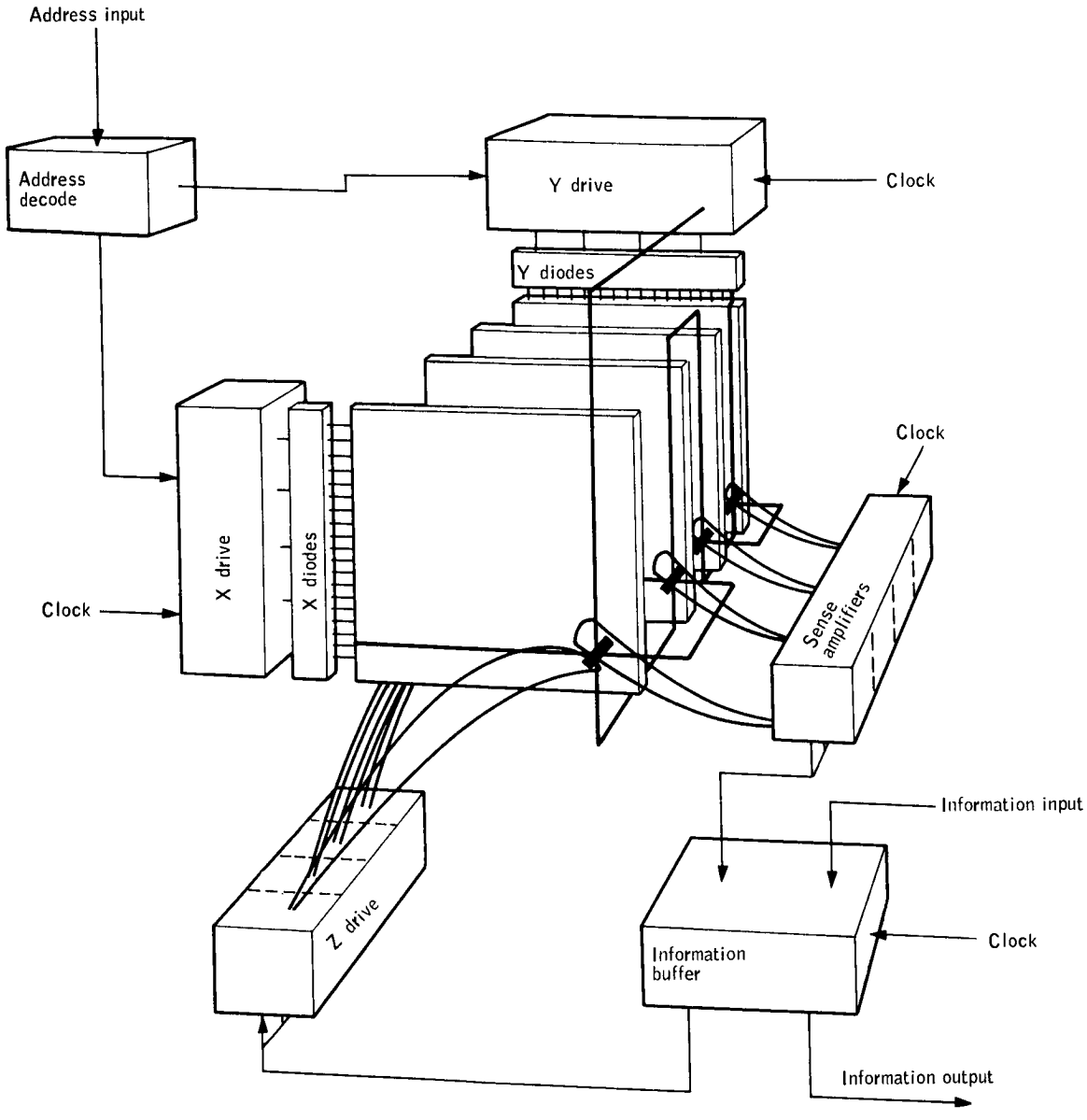

Figure 20. 3-D Coincident Current Selection (Four-Wire)

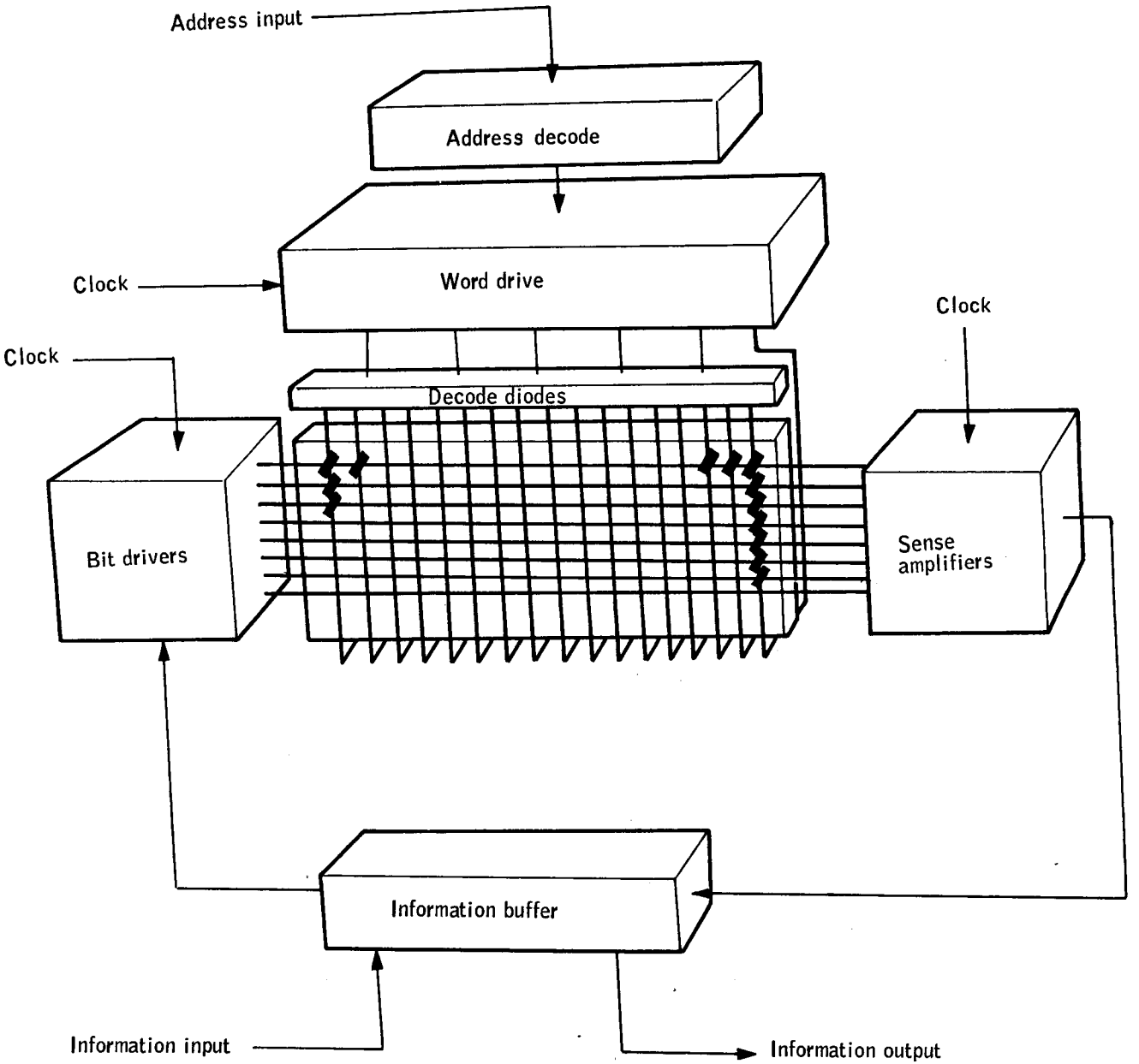

Figure 21. Word-Organized Selection (2-D)

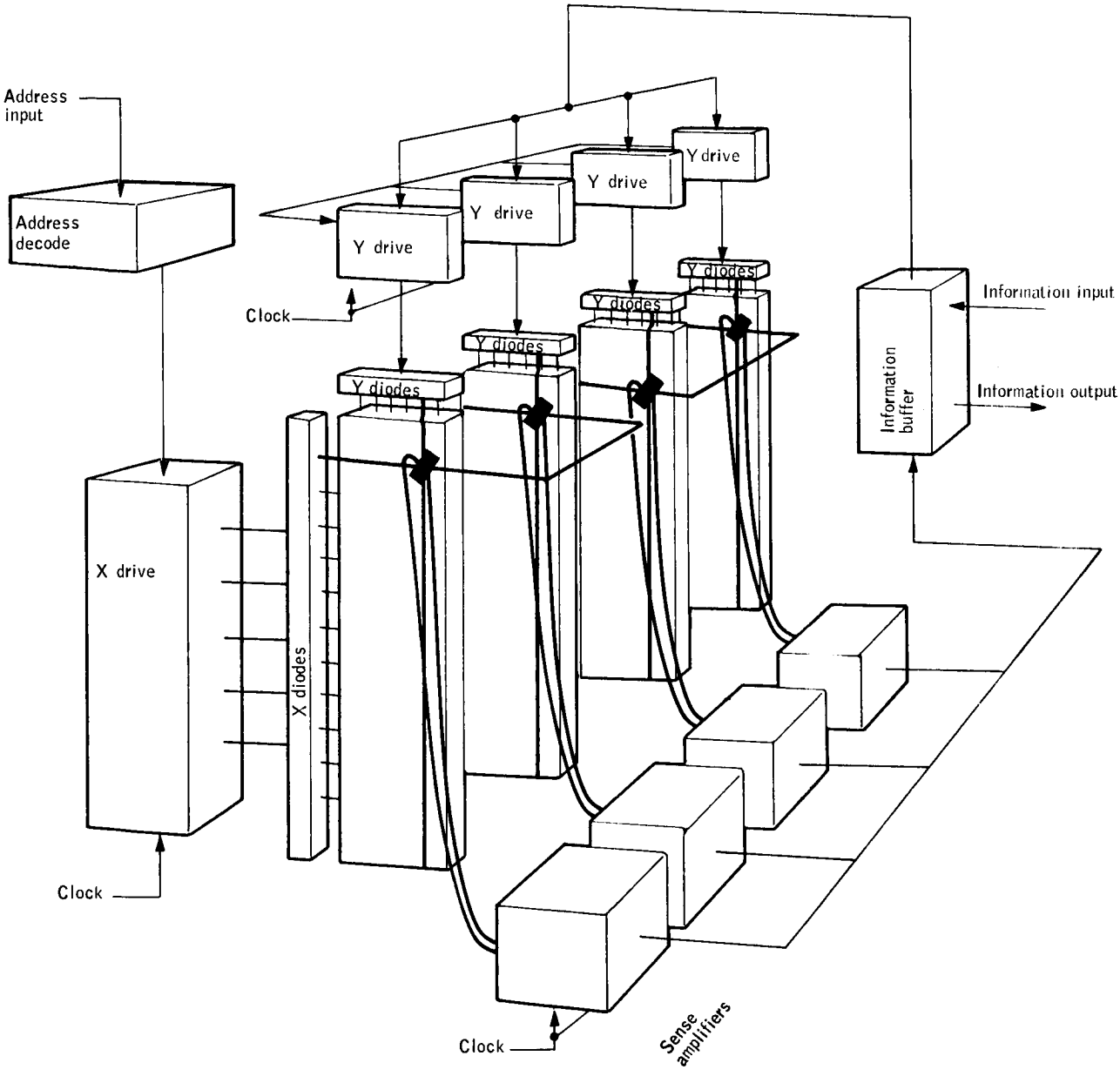

Figure 22. 2.5-D Coincident Current Selection

TABLE 12. - COMPARISON OF SELECTION SCHEMES

Scheme	Advantages	Disadvantages
3-D coincident-current	Fewest components (intermediate sizes) Highest density (lower power)	High degree of element uniformity required Tightest drive current tolerances Most complex stack geometry Sense signal complicated
2-D word-organized	Simplest stack geometry Widest drive tolerances (highest speeds possible)	Highest component count Lowest density
2-1/2-D coincident-current	No digit drive Component count lowest for large sizes Intermediate density, stack complexity, drive tolerances, high speeds possible	Component count comparable to 2-D for small sizes

3. Data output shall be in frames of constant length and not exceeding 8192 bits.

4. Word length shall not exceed 32 bits and shall be of constant length for a mission.

5. Variable word organizations in frames are permissible if identified in lead frame.

6. The preferred method of synchronization is use of a pseudo-random code pattern repeated each frame.

7. The maximum number of data bits between transitions shall not exceed 64. Odd parity or word synchronization shall be used to insure bit transition.

Only two HDS requirements or constraints apply directly to this function. On the order of 500 000 bits of data must be transmitted in approximately two minutes to the STADAN station. Spacecraft time must be transmitted to the STADAN station such that it can be measured and recorded to seven msec.

Formatting concept. -- The spacecraft telemetry output can be completely compatible with STADAN as it presently exists, and no changes are recommended. All data on the spacecraft will be outputted in digital binary form. The total quantity of stored data (maximum on the order of 500 000 bits) can be transmitted at a 4000 bits per sec rate in 125 sec. Either storage size could be increased or maximum telemetry time of two minutes could be decreased if later system analysis requires it and still remain within the Minitrack capabilities.

A block diagram outlining the functions to be performed in output formatting is shown in Figure 23. These functions are fitting data into standard frames and labeling the frames with format, generating synchronization words, generating parity data, and transmitting time information. The present concept indicates that all of these functions should be integrally incorporated in the memory system organization.

Data inputs to the memory should be entered into fixed frames (allotted memory blocks) such that in a serial read-out a uniform frame or block of data comes out directly. For example, when a revolution of starmapper data is recorded this is read into 20 memory locations (allowance for a maximum of six stars). If less than six stars are observed on this revolution, zeros are entered in the extra memory locations. A set of samples defining one radiance profile will be entered into a block of the memory and not intermixed with data from other sensors. It appears that data will not have to be recorded simultaneously from any of the sensors.

With minimum memory buffering this approach can be achieved. It is premature to show a detailed memory output format at this time.

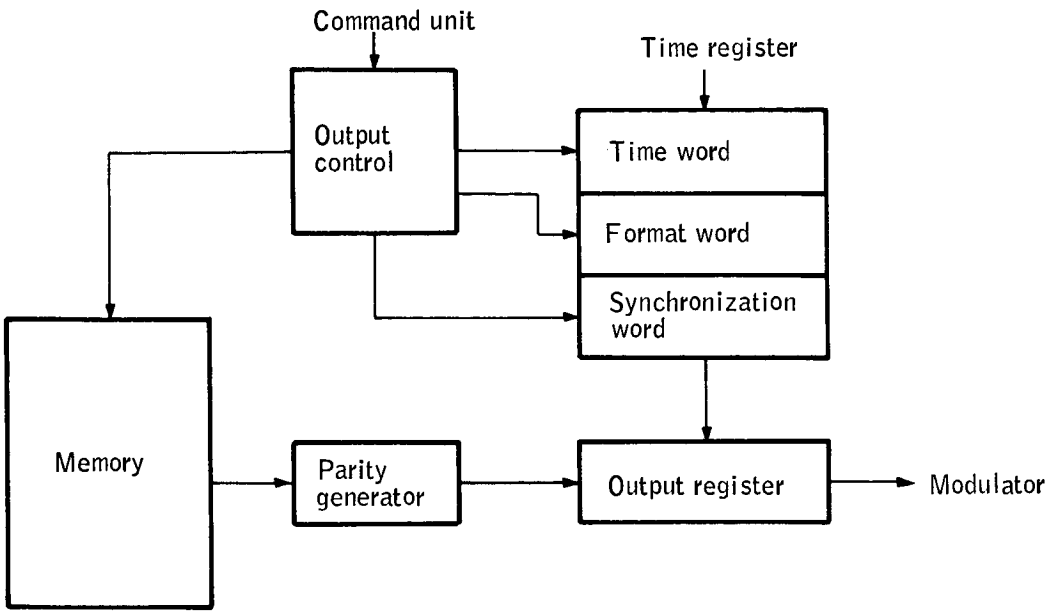

Figure 23. Output Formatting Functional Block Diagram

The synchronizing word will be hard wired into the memory. The memory is organized such that this is the first word read out in each output frame of data. Including the fixed synchronizing word in the memory provides a simple ground failure analysis check on the memory addressing and read-out circuitry.

Odd parity will be generated on all data in the memory input circuit. One bit of the 32 bit memory word will be designated as the parity bit. On a serially organized memory, parity generation requires negligible hardware. Parity checking is included as a means of detection of bit errors due to transmission noise or circuit failures. In this case, including a parity bit in each memory word adds approximately 3 percent to the total bit storage requirement, but provides easy detection and localization of failures in the memory and, thus, possible correction of the data or of the failure.

The method of transmitting time information to the ground to correlate spacecraft relative time with real time is previously described. On a ground command to transmit the data from memory, transmission start is held until a precision revolution timing mark occurs (20 sec between marks), then the synchronizing word is sent starting at the mark. On the mark, the time in the timing register is read out and transmitted as the second word of the transmission. The timing precision is contained in the measurement of the time of reception of the synchronizing word on the ground. The time word is sent only as a gross bookkeeping aid and to verify that the spacecraft clock has not lost a major cycle. Spacecraft bit transmission will be controlled by the spacecraft clock to time accuracies of ± 26 μsec.

RELIABILITY

Preliminary reliability estimates on the data handling subsystem show a no-redundancy reliability for one year of .733 and a complete cross-strapped redundancy reliability of .984. A tentative approach using partial redundancy shows a one-year reliability of .91. It appears at this point in the system design that only partial redundancy will be required. However, considerably more detail design is required to define the critical failure modes and select the optimum areas for including redundancy.

Preliminary parts count estimates were made on each unit of the data handling subsystem and are shown in Table 13. The failure rates shown are based on Honeywell's estimated failure rates for high reliability components. The memory unit of 500 000 bits size is estimated to be equivalent to 700 integrated circuits.

Based purely on the parts count estimate, all components critical, and no redundancy, the subsystem reliability for one year is .497 as shown in Table 14. To show that the estimate is very conservative, a comparison estimate is given which is based on demonstrated space hardware. The comparison estimate shows a subsystem reliability of .696 with the same assumptions as above. It shows with an extensive testing program, tight

TABLE 13. - DATA HANDLING SUBSYSTEM COMPONENT ESTIMATES

Function	Failure rate, failures per million hours Component	Unit
Command verifier and decoder		3.92
70 integrated circuits	.056	
Timing oscillator and register		3.00
1 quartz crystal oscillator	.20	
50 integrated circuits	.056	
Programmer		7.84
140 integrated circuits	.056	
Radiometer data collection		7.06
12 transistors	.02	
80 resistors	.001	
10 capacitors	.002	
120 integrated circuits	.056	
Attitude determination data collection		5.94
12 transistors	.02	
80 resistors	.001	
10 capacitors	.002	
100 integrated circuits	.056	
Status data collection		9.48
40 transistors	.02	
200 resistors	.001	
40 capacitors	.002	
150 integrated circuits	.056	
Memory		39.2
equivalent of 700 integrated circuits	.056	
Formatting		3.36
60 integrated circuits	.056	

TABLE 14. - PARTS COUNT RELIABILITY

		Reliability, 1 year
Parts count estimate		
No redundancy All components critical		
• Data handling unit		.701
• Memory unit, 500 kbits		.709
	Total	.497
Comparison estimate		
No redundancy All components critical		
• Data handling unit (Extrapolated from RCA command & control experience)		.889
• Memory unit (Extrapolated from E.M.I. VELA system experience)		.784
	Total	.696

worst-case design, and component derating, as would be used on this program, that considerable improvement in reliability can be achieved.

The estimates in the previous paragraph are based on the assumption that a failure in any component is critical. Recognizing that this is not the case, with many failures causing only degraded modes of operation, an estimate of the number of critical components of each unit was made and is shown in Table 15.

In the case of the memory system, it was estimated that one failure destroying not more than 20 percent of the memory contents would not be classed as a critical or mission-destroying failure. It is feasible to construct the memory to assure, in general, that this is the case.

Based on the critical components estimates shown in Table 15, the predicted subsystem reliability is shown in Table 16. With no redundancy, the reliability estimate for one year is .733. With complete cross-strapped redundancy, the reliability would approach .984. To reach .984 would require perfect switching logic between redundant units. With selection of redundant units controlled by ground command and no decision logic on the vehicle, the switching logic can be minimized.

A representative reliability flow diagram with partial redundancy included is shown in Figure 24. Cross-strapped redundancy is included for all units except status data collection, memory, and formatting. The one-year reliability for this system approached .91 as shown in Table 17. A system of this type is expected to evolve through the design process. Complete unit redundancy may not be necessary in many cases; critical component redundancy may suffice. For example, in the memory system quadded diodes or redundant sense amplifiers may be used to improve the reliability without requiring completely redundant units.

TABLE 15. - CRITICAL COMPONENT ESTIMATES

Function	Critical
Command verifier and decoder	100%
Timing oscillator and register	100%
Programmer	90%
Radiometer data collection	90%
Attitude determination data collection	90%
Status data collection	10%
Memory	1 allowable failure
Formatting	90%

TABLE 16. - PREDICTED SUBSYSTEM RELIABILITY

Function	Predicted reliability	
	Without redundancy	With redundancy
Command verifier and decoder	.9663	.9988
Timing oscillator and register	.9740	.9993
Programmer	.9378	.9961
Radiometer data collection	.9459	.9971
Attitude determination data collection	.9542	.9979
Status data collection	.9917	.9999
Memory	.9525	.9951
Formatting	.9738	.9836
Composite	.7328	.9836

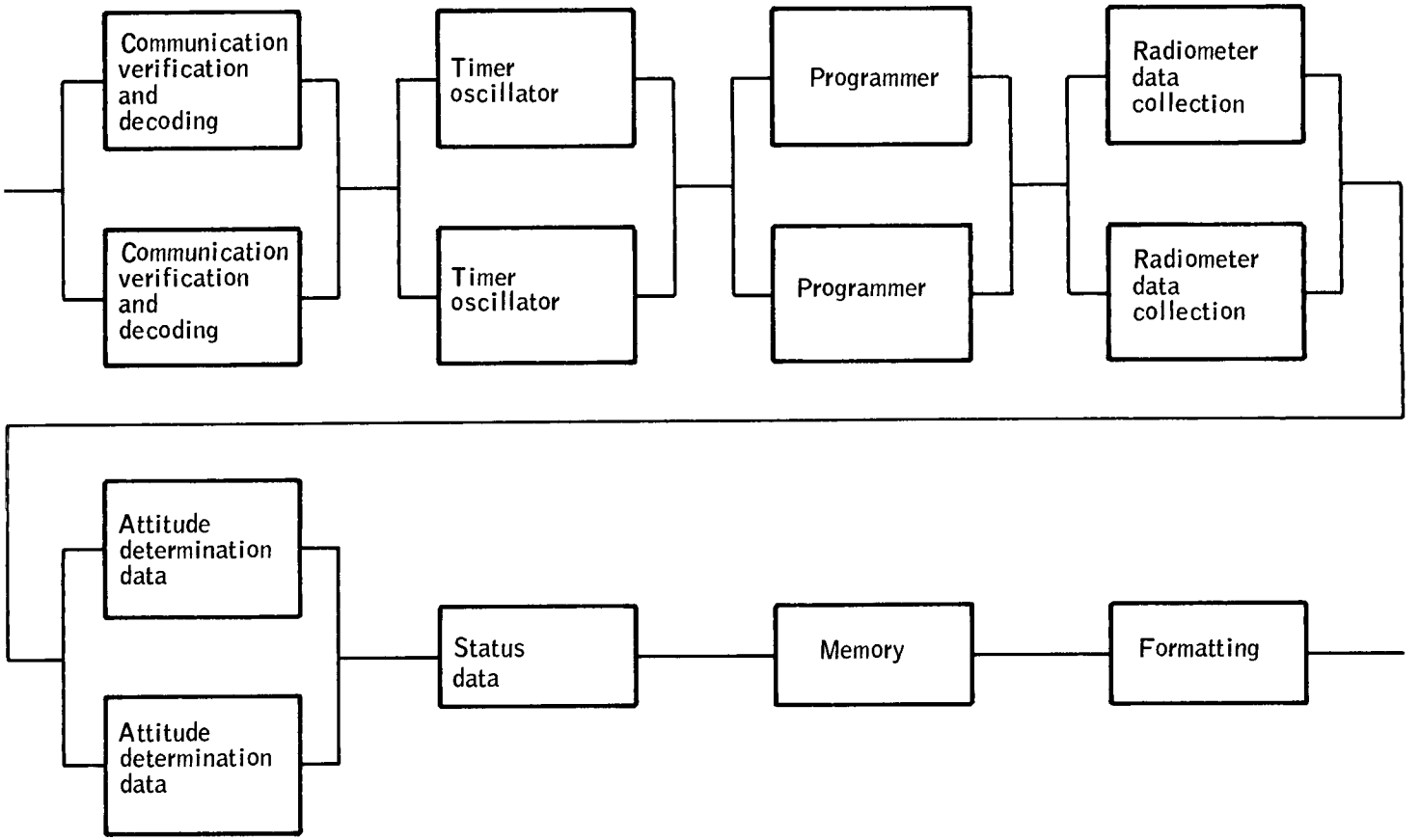

Figure 24. Data Handling Subsystem Reliability Flow Diagram

TABLE 17. - SUBSYSTEM RELIABILITY BASED ON PARTIAL REDUNDANCY

Function	Reliability
Command verifier and decoder	.9988
Timing oscillator and register	.9993
Programmer	.9961
Radiometer data collection	.9971
Attitude determination data collection	.9979
Status data collection	.9917
Memory	.9525
Formatting	.9738
Composite	.9099

CONCLUSIONS AND RECOMMENDATIONS

The following list of conclusions and recommendations are the key results of the data handling study.

1. A solid-state digital data handling subsystem with on-board storage is necessary to meet the system requirements.

2. The solid-state system described in this report is feasible and within the state of the art.

3. The system is compatible with STADAN with no changes recommended.

4. Storage space for one orbit of data on the vehicle is recommended. Although a small gap in global coverage can occur, this quantity of storage provides space for significant flexibility in most orbits where more than one ground contact occurs.

5. A ferrite-core memory system of approximately 500 000 bits size is recommended for the system. This recommendation is principally based on the fact that ferrite-core storage devices are presently available with no significant development required.

COMMUNICATIONS SUBSYSTEM

SUBSYSTEM REQUIREMENTS

The communications and tracking subsystems for the Horizon Definition Study spacecraft will be used to perform several functions either simultaneously or individually.

Data Transmission

The first function is that of transmission of scientific data from the moving vehicle to ground telemetry stations comprising the NASA Satellite Tracking And Data Acquisition Network (STADAN). This system must be capable of data transmission from the radio horizon to a ground station to ensure maximum data delivery, particularly in those instances where the vehicle's path will be at low angles above the horizon. Studies of the scientific aspects of the program indicate that data rates of the order of 4000 bits per second will be necessary to ensure adequate numbers and accuracy of scientific data sampling points. Furthermore, the nature of the scientific data dictates a pulse code modulation system to ensure the necessary accuracy of the scientific data samples.

Tracking Aid

The second function is that of enabling the ground STADAN to determine where the vehicle is at any time with a high degree of accuracy. The objective may be accomplished over a period of time by successive refinements of the orbit in a computer program so that instantaneous determination is not necessary. The accuracy must be high since the requirements of the experiment dictate that measurements on the order of ± 125 meters in tangent height of the horizon are desired. The requirement translates to an approximate ± 200 meters error budget for the "in-track" location of the spacecraft.

Command

The third required function is that of enabling a ground STADAN station to command certain functions to be performed on the spacecraft. These commands must be performed with a high degree of reliability in a relatively short time period because the time which the vehicle is over a ground station is relatively short. The commanded functions required typically are -- transmit data, adjust position, actuate radiometers, etc. -- up to a total of 58 different commands.

Acquisition Aid

The fourth function needed is that of furnishing a beacon signal to permit ground stations to acquire the spacecraft at long ranges with relatively wide pattern antennas. The primary purpose of this beacon is acquisition only.

SUBSYSTEM CONCEPT SUMMARY

To meet the above requirements, it then becomes necessary to supply the following subsystem components:

1. Telemetry transmitter
2. Tracking transponder
3. Command receiver
4. Beacon transmitter
5. Antennas for above units

The block diagram shown in Figure 25 includes the functional units and interconnections which are necessary to perform the required tasks.

The following paragraphs summarize the significant features of the communications subsystem and the method by which a high degree of functional redundancy is achieved.

Telemetry Transmitter

The telemetry transmitter is a solid-state transmitter operating in the 137 MHz frequency range. The primary purpose of this transmitter is to transmit stored scientific data in a pulse code modulation (PCM) format from the spacecraft data storage system. The transmitter is phase modulated by the serial PCM data bit stream from the storage system. The modulation deviation is controlled so that the central carrier does not vanish. This will permit use of the transmitter for beacon application in case of beacon failure. The transmitter output is duplexed onto the same antenna as the beacon by a hybrid duplexer.

Tracking Transponder

The tracking transponder is a unit designed to work with the Goddard Range And Range-Rate tracking system. It is designed for coherent range tone tracking and, as such, functions as a translator. In this system, the output is derived from the received input by mixing and use of linear amplifiers in order to minimize the effects of phase shift through the system. In addition,

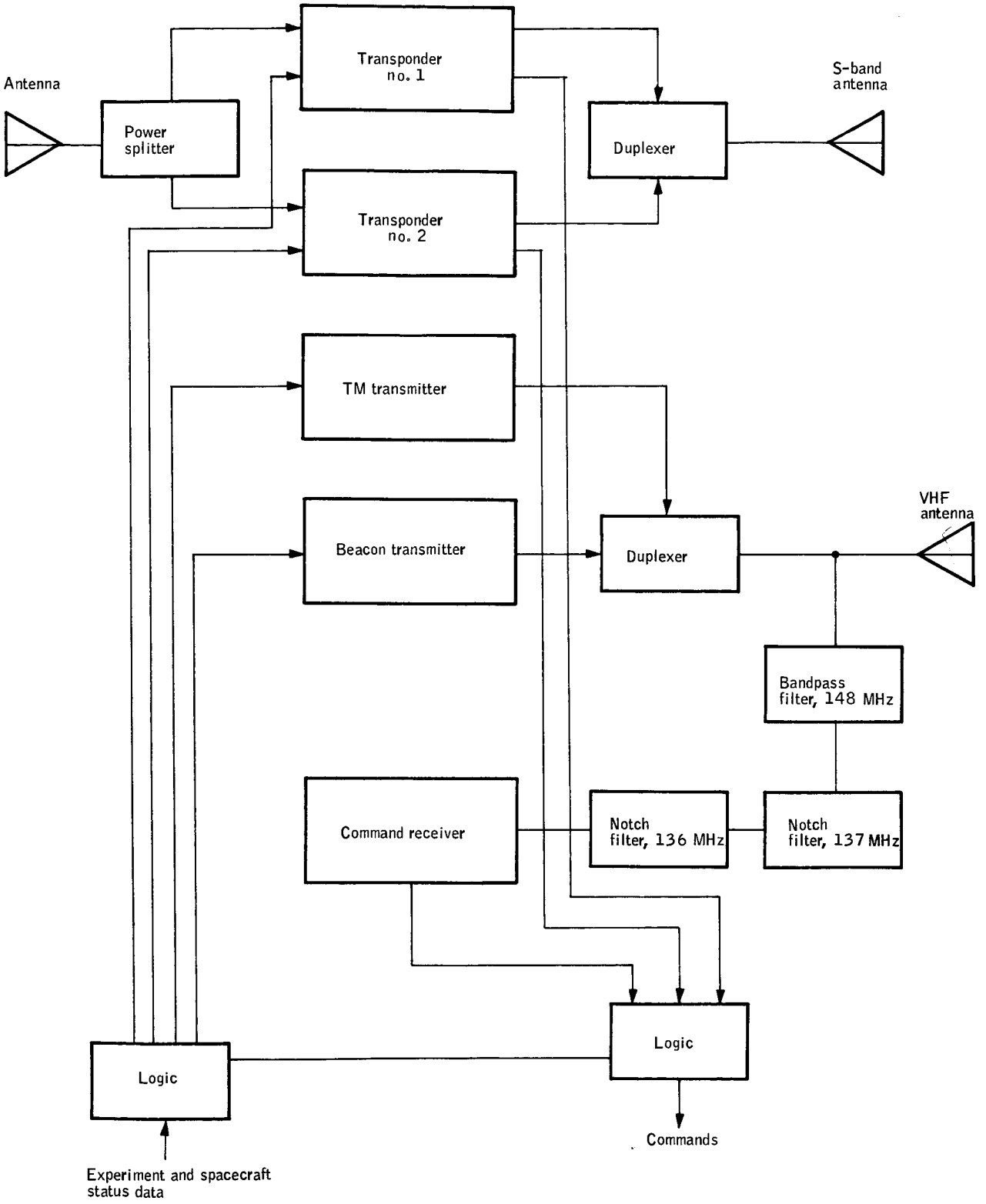

Figure 25. Communication Subsystem Block Diagram

the system is capable of being used as an integrated S-band system by addition of command separation filters and decoders together with a subcarrier oscillator and modulator for telemetry transmission. Use of the system for data transmission requires due allowance for power in the extra data bandwidth, and these allowances are incorporated in the section on system specifications.

Command Receiver

The basic command system operates at 148 MHz as shown in the block diagram. It is estimated that 58 commands will adequately handle the command requirements for the mission. This number permits some margin for unforeseen command requirements if the STADAN tone digital command system is employed since this system can handle up to 70 commands. Commands may also be received via the S-band transponder as mentioned in the previous paragraph.

Beacon Transmitter

The beacon transmitter is used primarily for acquisition of the vehicle as it comes over the horizon. It normally operates in a cw mode, but contains provision for modulation so that on command it can transmit spacecraft status data directly to the ground. This particular data is not stored since its utility is not directly related to the experiments but merely serves as an occasional check upon the status of certain of the spacecraft subsystems. The beacon's power output is comparable with that of the telemetry transmitter to permit its use as a primary data transmitter if the normal telemetry transmitter fails.

Antenna System

VHF antenna. -- A single antenna system is recommended for the 136 to 148 MHz telemetry and command functions of the spacecraft. The telemetry transmitter, beacon, and command receiver are multiplexed with filter networks as shown in Figure 25. The two transmitters are connected by a hybrid duplexer, and the command receiver is connected by a 136 MHz and 137 MHz notch filter and a 148 MHz band pass. The antenna are two sets of either three or six broadly tuned stubs located on either end of the spacecraft. The anticipated radiation pattern is a torus about the spin axis.

S-band antenna. -- The S-band antenna system consists of a set of six transmitting and six receiving slots. One set of these slots is located on the end of each of the six solar panels. By phasing the antenna 60 deg apart, it is possible to obtain a relatively smooth torus-shaped pattern about the spin axis of the spacecraft. The two transponders are duplexed onto a common antenna to avoid the use of a coaxial switch.

MODES OF OPERATION

Figure 25 shows a number of interconnections which are intended to be back-up modes that may be employed in the event of failure of a subsystem component. The logic boxes permit the following functional transfers:

Function	Alternate mode
Telemetry transmission	Beacon transmitter S-band transponder no. 1 S-band transponder no. 2
Beacon transmission	Telemetry transmitter
Command reception	S-band transponder no. 1 S-band transponder no. 2

These alternate modes of operation may be semi-automatic in some cases or upon command in others. In arriving at these modes of operation, it has been assumed that the Goddard Range and Range-Rate (GRARR) system will be updated in the next two years so that ground transmitters will be capable of command transmission and that ground receivers and stations will be capable of data reception and recording. At the present time, the range and range rate stations are not so designed, but it is understood that the stations' are to be modified to accept these changes; this is also considered in the Goddard specification on range and range rate transponders. This specification is included in Appendix D.

A more complete block diagram is shown in Figure 26. This diagram was developed to permit more detailed study of reliability problems and consequently better analysis. Types and quantities of the parts (resistors, transistors, capacitors, etc.) were estimated for each block. This analysis has been performed by Honeywell and is included as Appendix E of this report. The analysis was initially performed on each unit in its normal operating mode and then on a basis of back-up considerations using alternate signal paths as previously discussed. This analysis has been cross checked by RCA in light of their experience with the Tiros satellite and others, and the results agree. It was deemed necessary to use a second or redundant S-band transponder as a result of these studies.

PERFORMANCE LIMITATIONS

In general, there appear to be no areas in which it is difficult to achieve the requirements set forth in Subsystem Requirements. Compatibility with STADAN implies a rather specific environment, but this environment is such as to permit achievement of a satisfactory system with relatively little difficulty.

Data quantities from the scientific experiments are such that for two-minute transmission time periods the narrowest bandwidth's (30 kHz) of STADAN receivers may be used.

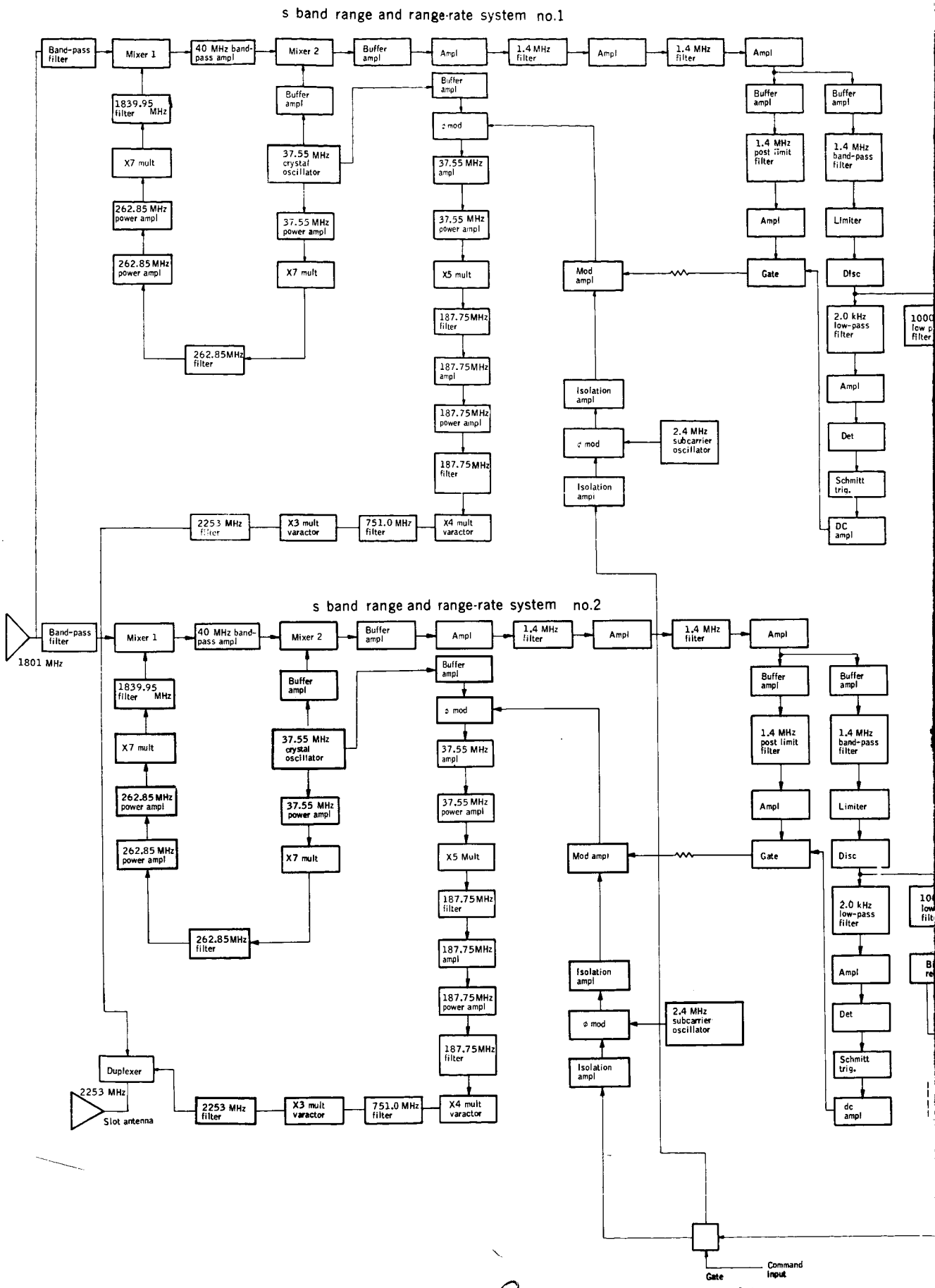

PRECEDING PAGE BLANK NOT FILMED.

97

Figure 26. Communication Su

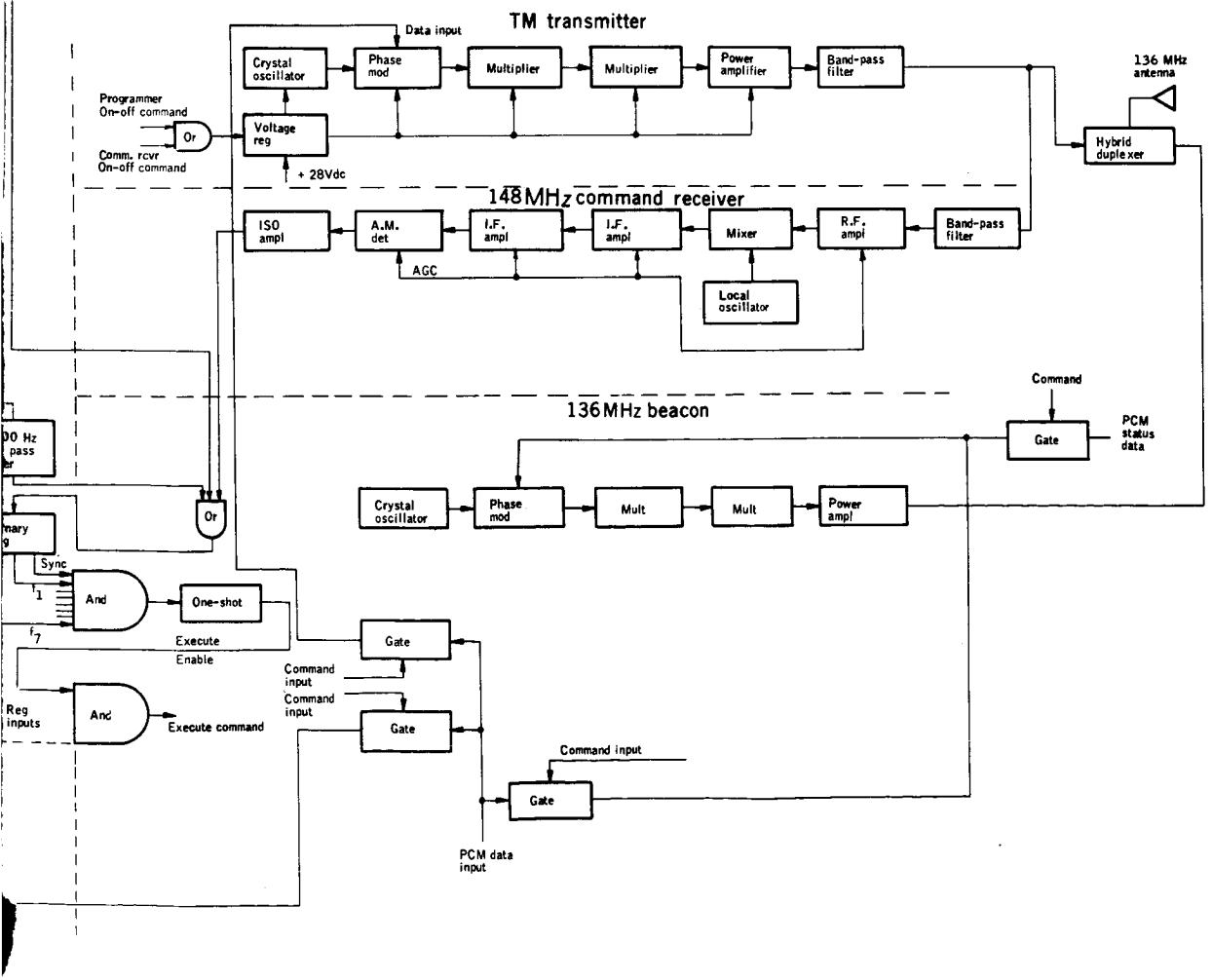

bsystem Block Diagram

Command requirements (58 commands) are well within the capabilities of the STADAN tone digital system which can handle up to 70 commands.

Tracking capabilities of the Goddard Range And Range-Rate S-band system are sufficient to meet the requirement of ± 200 meters "in track" satellite position location. A number of appropriate Goddard specifications and standards are included in Appendices B, C, and F.

TRADEOFFS

Experiment Data Transmission

The STADAN manual indicates that a considerable number of frequencies are available for data transmission. However, when the number of stations equipped is examined, it is evident from inspection that best coverage is only accomplished with the Minitrack telemetry facilities which dictates the use of 136 MHz. For example, there are 14 stations at 10 different locations equipped for 136 MHz, 6 equipped for 400 MHz, and 3 equipped for 1700 MHz, exclusive of the range and range-rate system. The HDS program does not necessarily employ all stations, but the greatest degree of coverage can be obtained by the 136 MHz stations because of the distribution at high latitudes. In addition, the greatest amount of spare equipment is available at the most-used frequency. An exception to this is the possibility of modulating data onto the down link of the S-band range and range-rate system. Since one station (Carnarvon) lacks data recording facilities, it would be desirable to supply that station with a data recorder. In this case, the S-band range and range-rate system becomes a suitable back-up system for gathering telemetry data.

Antenna Systems

VHF antenna systems. -- Since the frequency separations of command and telemetry are not large, it appears feasible to design a suitable antenna for covering the frequency range from 136 to 148 MHz so that the telemetry transmitter, the beacon, and the command receiver may all operate from the same antenna as shown in Figure 25. In a system of this nature, provision must be made to prevent the telemetry transmitter from feeding the beacon transmitter and vice versa. This prevention is obtained by the hybrid duplexer. Furthermore, the command receiver's input must not see a large signal from the transmitters; this is accomplished by the bandpass and notch filters shown in Figure 25. The bandpass filter serves to pass the 148 MHz signals and attenuates the beacon and telemetry power going toward the receiver, and the notch filter further attenuates the 136 and 137 MHz power flowing toward the receiver.

The plan of the spacecraft is not symmetrical since the solar panels create a dissymmetry at one end(Figure 27a). This dissymmetry will pose a problem in obtaining a symmetrical pattern about the spacecraft so that it may be interrogated or received from any angle on the ground. Figure 27b shows the

pattern shape desired for this system. Since the solar cell panels are on one end of the vehicle there will be a shielding effect for an antenna placed on the other end. Furthermore, it appears difficult to obtain the desired pattern by use of a single antenna placed at the spin-axis center as shown in Figure 27a. This particular antenna is characterized by a deep null off the end of the antenna. As a step to correcting this difficulty, the turnstile antenna shown in Figure 27c is proposed. With this configuration and the individual stubs fed in 0-120-240 degree order, a circular polarization is set up with a useful component off the right-hand end of the vehicle (as seen in Figure 27c) so that by use of circularly polarized receiving antennas the null depth is lessened. By combining the right- and left-hand sets in Figure 27c, it appears to be possible to adjust the balance of the two so that a pattern similar to Figure 27b may be obtained in the far field. The pattern of Figure 27b is shaped as shown to emphasize the relative amplitudes at approximately ±67 deg on either side of a perpendicular to the spin axis to permit good ground reception at low slant angles to the spacecraft. This pattern is considered since, in flights directly over ground stations, the maximum amount of time is available for data transmission; at low slant angles, gain is required to compensate for distance and transmission time loss. To achieve this elevation pattern, it is necessary to utilize an antenna with a small amount of aperture gain. This gain is effectively supplied by the spacing shown in Figure 27c since each antenna set is separated by the depth of the spacecraft body along the spin axis. Spacing of the antennas away from the spin-axis center will produce some scalloping of the pattern as shown in Figure 27d in reference to an isotropic level for three stubs. This may be compensated to some extent by employing six stubs fed in 0-60-120-180-240-300 deg order. This configuration may be more desirable from the symmetry standpoint since the vehicle has six panels, but it is an awkward and complex system. Three stubs may satisfy the problem if their centers can be closely spaced and can achieve the desired balance to obtain the proper elevation pattern. Another alternative is that of moving the stubs on the panel end to wider spacings as shown in Figure 27e. This may be an aid in achieving elevation pattern uniformity, although it is rather undesirable from the standpoint of complexity and cabling.

The general antenna concept is similar to that used in the Tiros satellite series in which similar configurations were used to achieve approximately isotropic radiation patterns with circular polarization from the spacecraft. It is recognized that no final choice has been made for the antenna set and that what has been discussed are directions for development. The spacecraft structure is an exceedingly complicated system for the external currents (traveling over the surface) that are associated with the antenna set. Not only is the main body multisided, but panels extend out perpendicularly to the body. This configuration leaves slots between the panels and the body. Furthermore, the panels are rectangular which leaves shaped notches in their spacing. These complications make the task of computing the radiation pattern from an antenna set a formidable problem; however, there is no question of the feasibility of developing the desired pattern. From a cost standpoint, it is considered much better to use an empirical approach to the problem by building a vehicle mock-up and taking trial cuts on an antenna range. Frequency scaling may be employed on the vehicle to reduce the antenna patterns to a convenient antenna range size (i. e., one-half to one-fourth size) for the 136 MHz

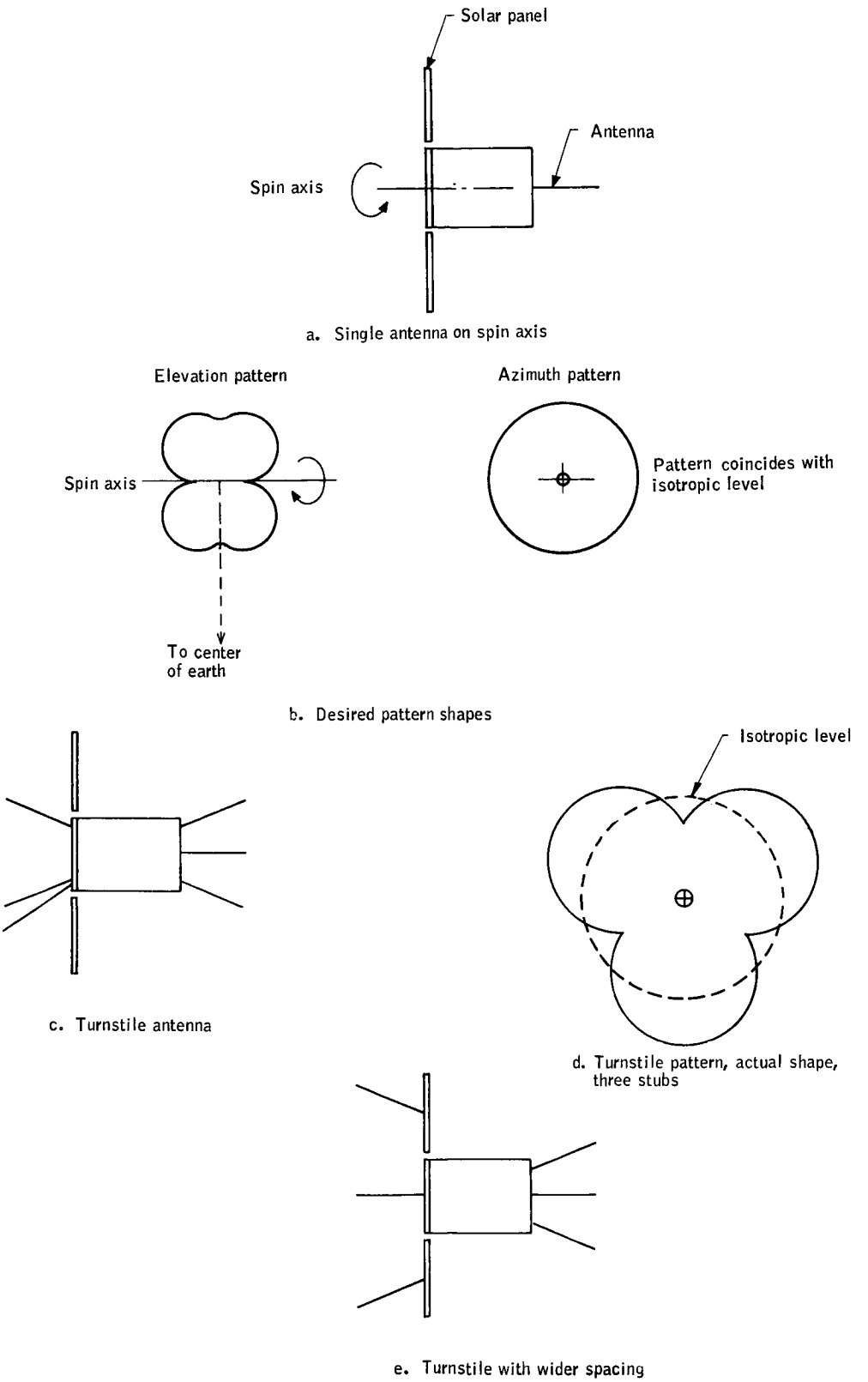

Figure 27. Antenna Models and Patterns

system. The S-band antennas may be checked on a full size mock-up since the frequency is high enough to be accommodated by any convenient antenna range.

S-band antenna system. -- Separate receiving and transmitting antennas are considered for the transponder system since the receive and transmit frequencies are separated by 500 MHz. Slot antennas are considered for this application. The slots are mounted in pairs on either side of a center line at the far ends of the solar panels. In this manner it should be possible to obtain a smooth pattern by use of a 0 - 60 - 120 - 180 - 240 - 300 degree feed system since patterns shaped similar to Figure 27b are desired. Again, the spacing will produce some scalloping of the edges, but this is considered tolerable. The antenna will be made with reasonably wide bandwidth to preclude the possibility of detuning due to dimension changes with temperature.

The use of separate slot antennas is expected to alleviate diplexing problems in the transponder unit.

The received signal for the S-band transponder is split by the power splitter so that a 3.0 dB loss is suffered here. This amount is not considered serious since the ground transmitters and associated antennas have relatively high power output and gain. Output of the spacecraft transponders is combined in a hybrid duplexer. Use of separate antennas for reception and transmission will greatly alleviate the problem of obtaining proper phase angles for the antenna distribution system and will concurrently simplify the impedance matching problems.

The antennas proposed here are slot antennas with the radiation confined to one hemisphere only. The confinement is obtained by use of a $\lambda/4$ section of wave guide backing up the slot. The guide may be used as an impedance matching transformer section to transform from the approximate 538-ohm impedance of the slot down to 50 ohms for coaxial line distribution. This antenna type is discussed in a number of references (3, 4, and 5) and is a convenient one for obtaining relatively wide bandwidths without great difficulty.

Modulation techniques. -- Several ways of applying the signal intelligence to the telemetry carrier exist, but STADAN employs primarily amplitude or phase/frequency modulation. Phase modulation is considered in the system proposed as phase-lock detection permits better detection in conditions where the signal-to-noise ratio is low (refs. 6 and 7). Furthermore, by control of the deviation a certain portion of the carrier is left in the spectrum distribution, which permits doppler tracking of the carrier. This feature is useful in back-up modes of operation and was the basic reason for employing equi-power telemetry and beacon transmitters. Since a relatively constant data rate is considered, the use of phase modulation makes full use of the data bandwidth. Additionally, the phase modulator itself is relatively simple to implement in spaceborne equipment.

Tracking. -- The STADAN system is equipped for tracking by two different means. The first system employed was the interferometric system known as Minitrack. It was originally intended for angle tracking of vehicles in circular or near-circular orbits. Under these limitations, the system read out angle information only, and the altitude was determined from the orbit time and computation. While relatively satisfactory for many applications, the systems accuracy is not high and degrades for elliptical orbits. To achieve high tracking accuracies, the range and range-rate system was developed (refs. 8 and 9).

The range and range-rate system operates on a phase measurement basis in which range tones are simultaneously modulated onto a carrier, transmitted to the vehicle, frequency shifted by translation in a mixer against a high stability local oscillator, and retransmitted on a reply frequency to the ground station. In this process, phase coherence is preserved so that range may be measured by coherent phase measurements. The system was designed to operate at both vhf (137 MHz) and S band (1700 to 2200 MHz). The 137 MHz must also be used as an initial acquisiton aid for the S-band system since the S-band system is a relatively narrow beamwidth system. This dual system also permits low frequency (137 MHz) operation for certain types of very small satellites which for efficiency and other reasons could not employ the larger, less efficient transponders required at S band. The low-frequency system is employed on small satellites with highly elliptical orbits of relatively great range in spite of the fact that accuracy of the system is less than an S-band system because of a propagation problem.

The propagation problem has a lengthy history dating back to early airline communications in which a peculiarity was noted in flights over the Pacific Ocean to Hawaii. The peculiarity was that communications persisted over ranges well beyond the radio horizon at frequencies in the vicinity of 150 MHz. Subsequent investigations have determined that the effect is due to ducting produced by moisture-laden atmospheres which produce refraction of the wave front over and above that which would be normal to the variable density of the atmosphere (refs. 10, 11, 12, 13, 14 and 15).

Numerous other references are available which were not listed here since the ones included serve to highlight the problem. Generally, the ducting effect appears to be most severe over ocean paths in temperature ranges that produce a high degree of airborne water vapor. A considerable amount of effort has been spent in devising theories to form a model that can be analytically described; at the present that effort has not achieved a useful result. The literature indicates that the ducting effect is pronounced over an equatorial belt on the earth and is less pronounced in the polar regions. For a polar orbit then, the wave fronts would be entering the ducting region with every orbit; in an equatorial orbit, the ducting effect would be more or less continuous. At higher frequencies, the effect is less pronounced because of arrival angles and the fact that the depth of the ducting layer is much greater in terms of the operating wavelength. Goddard Space Flight Center estimates the ducting effect in terms of accuracy as shown in Figure 28 for the range and range-rate system.

Normal STADAN practice is to commence tracking at 10 deg above the horizon. In our case, it would be desirable to perform tracking to lower angles, say 5 deg, since the vehicle's path will not always be centered over the station. In the vhf tracking case, the ducting effect can be expected to be the most severe at low angles so that vhf tracking is not considered.

NASA Goddard's estimate of the measurement accuracy is ±15 meters in range and ±0.1 meter per second in range rate at S-band for the range and range-rate system. Some elementary cross checks of this have been made by Goddard at the Rosman station, but a large amount of data does not exist. The preliminary indications are that the values are correct, and on this basis it appears that the system can adequately perform the orbit determination task using an S-band transponder.

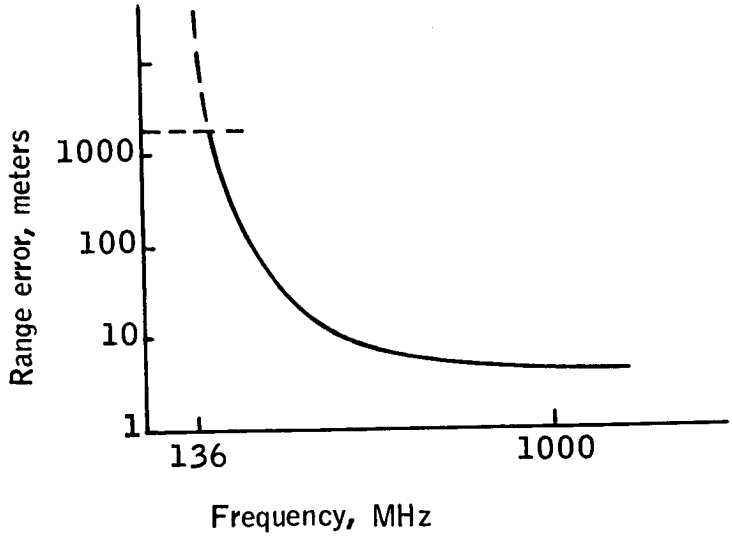

Figure 28. Errors Due to Ducting Effect

A possible alternate system is one in which full use is made of the range and range-rate system as an integrated system at S band. In this case, the telemetry transmitter and command receiver could be eliminated. It would, however, require that both transponders be operated in a standby mode to ensure two paths for command reception. This mode is considered to be slightly less favorable since a telemetry path alternate would be removed from the system. The 136 MHz beacon must still be carried in this configuration since it is used for S-band acquisition.

Having determined that the 136 MHz band must be used for primary data transmission and that S band must be used for ranging, the conceptual definition of the communications subsystem is essentially complete. Further detailed analysis must now be performed to determine the optimum methods of interconnecting and sizing the system components. The block diagram of Figure 26 has been evolved as the recommended communications subsystem for the HDS spacecraft.

SUBSYSTEM REQUIREMENTS ANALYSIS

The following sections describe the subsystem analysis performed to obtain the required values of carrier power, signal-to-noise ratios, distances, etc., which are the critical components to be related in any communications system. These will appear in the following sequence: telemetry transmitter, beacon transmitter, command receiver, and ranging transponder. Figure 29 shows the basic transmission geometry.

Telemetry Transmitter

Preliminary characteristics. -- Telemetry transmission frequency is assumed to be 137 MHz. For the telemetry system, present estimates indicate that approximately 2.0-minute transmission time with 4×10^3 bits/sec data rate will satisfy the data requirements. A split-phase modulation system is assumed and is described in Figure 30. From Figure 30 it may be seen that the condition representing the highest data rate is that in which a series of 1's or 0's is being transmitted. The pulse is assumed to occupy 50 percent of the 1 slot (or the zero slot) so that the pulse repetition period is $\frac{1}{4000}$ second and the pulse width is $\frac{1}{8000}$ second. A 0 immediately followed by a 1 represents the lowest frequency combination, and this will be equivalent to $\frac{1}{2000}$ second period with the pulse width equal to $\frac{1}{4000}$ second. These values may be translated to equivalent receiver i.f. bandwidth by the relationship $B_{if} = \frac{3}{2T_o}$ (ref. 16) where B_{if} is in Hz and T_o is the width of the pulse. This relationship has been derived from the viewpoint of maximizing the signal-to-noise ratio. Substituting for T_o, $B_{if} = \frac{3}{2}$

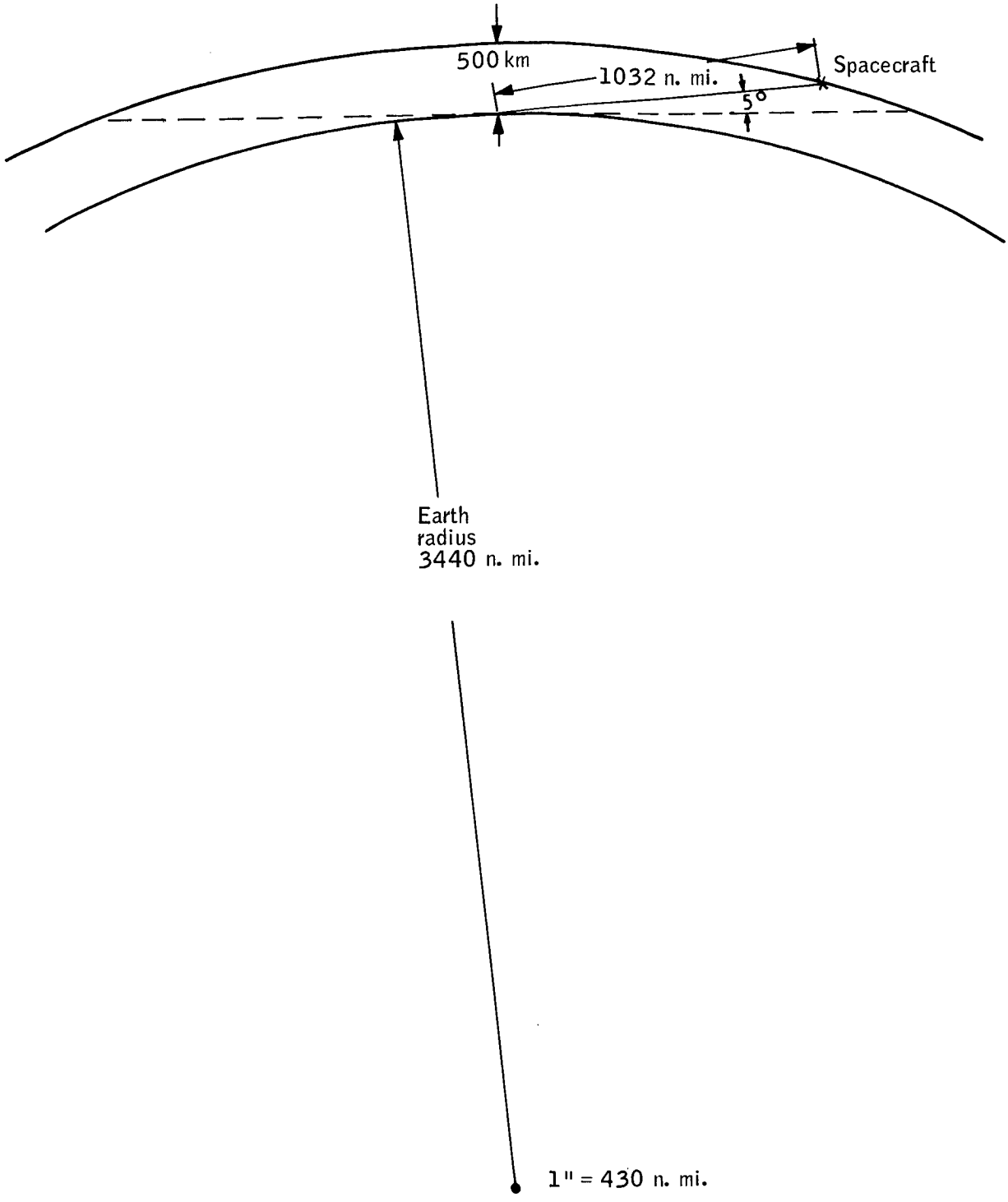

Figure 29. Communications Geometry

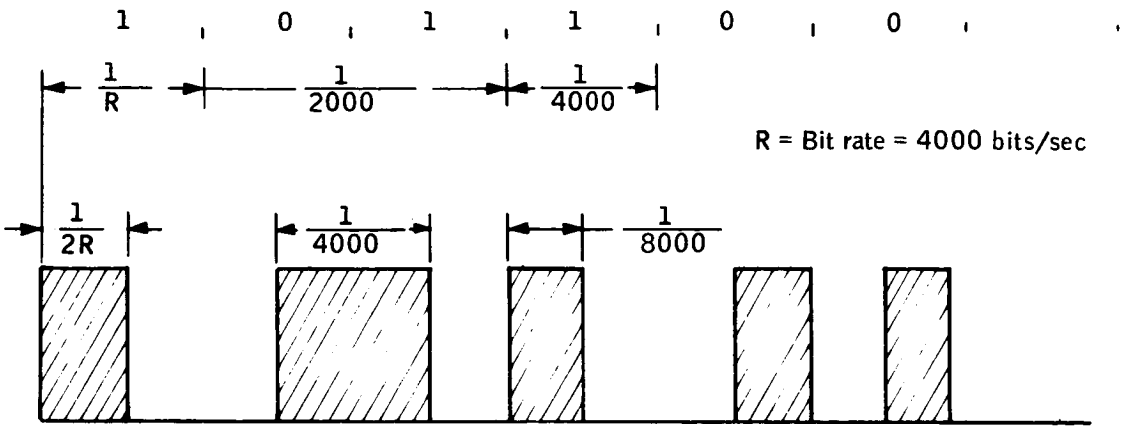

Figure 30. Data Bit Timing

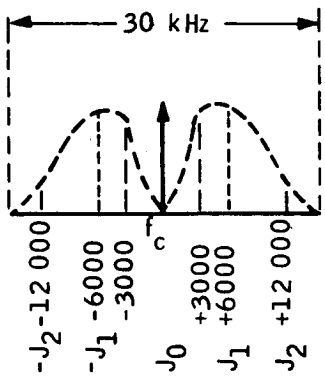

Figure 31. I.F. Spectrum Distribution

x 8000 = 12 000Hz. The other value of T_o yields a smaller value of bandwidth; thus, the largest value will be used to ensure reception of all components.

The input signal is a square wave whose width is fluctuating between $\frac{1}{4000}$ and $\frac{1}{8000}$ second, and, as a consequence, the signals will occupy an envelope within the receiver pass band as depicted in Figure 31. This envelope is the envelope of the Fourier components of the spectrum of the pulses. In addition to these components, an allowance must be made for the expected doppler shift (3500 Hz) plus transmitter stability allowance (0.0005% = 680 Hz). These allowances may be made without excessive clipping in a standard 30-Hz channel (see Figure 31).

Noise components consist of galactic noise, atmospheric temperature noise, noise figure of the receiver, and equivalent temperature increase due to losses in the receiver feed lines.

The galactic noise according to Hogg and Mumford is a function of wavelength which is expressed by $T_C = \lambda m^2 \times 290 = (2.2)^2 \times 290 = 1400°K$. This value depends upon pointing direction, and, in the usual case, these "hot spots" will not be seen. For analysis purposes an average temperature of 400°K will be assumed. The receiver noise figure component is 300°K for the three dB noise figure of the STADAN receivers. The antenna transmission line loss is estimated to be negligible since the preamplifiers are generally mounted on the antenna unit. The atmospheric component is estimated to be 100°K, and the total noise temperature is

Galactic	400°K
Atmospheric	100°
RCVR noise figure	300°
Total	800°K

The noise power in a 1.0 Hz bandwidth is $kT\Delta f = 1.38 \times 10^{-23} \times 800 \times 1 = 1.1 \times 10^{-20}$ watts = -169.6 dBm.

Phase modulation of the carrier is assumed in order to permit tracking of the carrier by a phase-locked detector so that a coherent phase reference may be derived for the detection process. Since the STADAN standards state that the network is not equipped to handle ± 90 deg phase modulation, the deviation will be held to ± 1.25 radians which is ± 71.7°. With this deviation the central carriers amplitude is described by the J_o Bessel function, and the corresponding amplitude factor is 0.42. The first sideband components are described by the J_1 Bessel coefficient, whose

amplitudes will be 0.50. The next coefficients will be the J_2, whose amplitudes are 0.17. The J_2 components are the last considered since the power product of these components amounts to $2 \times (0.17)^2 = 0.058$ of the total power, and higher components will be much lower than this value. From Figure 31 it is seen that the J_2 components of the signal will fit into the standard STADAN receiver bandwidth. For the $\frac{1}{2000}$ second data rate signals there will obviously be a somewhat different power distribution, since in this case the J_3 components will be sizeable. This, however, only results in a shift of the power within the passband which should not appreciably alter the signal-to-noise conditions.

The phase modulation detection process does not follow exactly the FM case. In particular, the input noise spectrum is uniform rather than "triangular" as in the FM case. As a consequence modulation improvement is gained primarily by the spread spectrum character of the signal. The improvement may be expressed as $(\Delta\theta)^2 (\Delta\theta + 1)$, where $\Delta\theta$ is the phase deviation (ref. 17). In this case since $\Delta\theta = 1.25$, modulation improvement (MI) = $10 \log (1.25^2)(1.25 + 1) = 5.48$ dB.

The threshold of modulation improvement has been shown to occur at (S/N) if ≥ 5 or approximately 7 dB for the PM case (ref. 18).

Antenna gains. -- The lowest gain STADAN antenna is rated at 19.2 dB over isotropic. This particular antenna is known as an 8-element Yagi.

The spacecraft antenna is unknown as yet, but for computation purposes it will be assumed that its gain is estimated at 9.0 dB below isotropic for the worst-look angle, which is presently estimated to be an angle approximately 15 deg below the spin axis.

Another loss to be expected is that of polarization mismatch between the spacecraft antenna and the ground antenna. This value is estimated to be 3.0 dB.

Space loss. -- The space loss is the spreading loss between isotropic antennas and is computed from $L_{sp} = 27.8 + 20 \log f + 20 \log d$ where $f = 136$ MHz, and the maximum transmission distance d is 1032 n. mi. for 5 deg above the horizon. This loss is 140.5 dB.

Miscellaneous losses. -- These losses combine the bandpass filter, duplexer, and wiring harness losses on the spacecraft and are estimated as

Bandpass filter	0.25dB
Duplexer loss	0.25
Wiring harness	0.5
Total	1.0 dB

For convenience it will be assumed that a 0.25 watt output transmitter is available. This value is a commonly used size and has been built for a number of satellite applications. The communications problem is summed in Table 18.

TABLE 18. - TELEMETRY GAIN-LOSS SUMMARY

	Parameter	Value	Remarks
P_t	Transmitter power	+24 dBm	0.25 watt transmitter
G_v	Vehicle antenna gain	-9 dB	9.0 dB below isotropic - worst case
G_r	Receiver antenna gain	+19.2 dB	STADAN antenna
L_{sp}	Space loss	-140.5 dB	Isotropic antennas & 1032 n. mi.
L_p	Polarization loss	-3.0 dB	
L_m	Miscellaneous losses	-1.0 dB	Duplexer, wiring harness, etc.
P_r	Power at receiver	-110.3 dBm	
M_L	Modulation loss	-2.6 dB	$2J_1^2 + 2J_2^2 = 0.5 + 0.05$
P_D	Power in data	-112.9 dBm	
N_o	Noise power density	-169.6 dBm/Hz	1 Hz bandwidth, 3.0 dB noise figure receiver, 800°K temp.
B_{if}	Intermediate frequency bandwidth	+44.78 dB	30 kHz bandwidth
P_n	Noise power	-124.82 dBm	
S/N	(in 30 kHz)	14.5 dB	$P_D - P_N$
T_{pm}	Threshold of PM	-7.0 dB	
S/N	(above 30 kHz threshold)	7.5 dB	
MI	PM modulation improv	5.48 dB	
S/N	Output	12.98 dB	

This value applied to curve A of Figure 32 will have an intersection with the error probability value which is below 1 part in 10^5 and from slope rates is estimated to be 1 part in 10^6. Thus, a high-quality data channel is assured with a transmitter output power of 0.25 watt.

The carrier tracking conditions must also be considered. These values are summed as follows:

Parameter		Value	Remarks
P_r	Power at receiver	- 110.3 dBm	From Table 18
Modulation loss		- 3.48 dB	J_0 component of transmitter power output
P_c	Carrier power	- 113.78 dBm	
N_o	Noise power per 1-Hz bandwidth	- 169.6 dBm	
B_{if}	Carrier tracking bandwidth	+ 10.0 dB	Electrac phase-lock loop, 10Hz bandwidth
N_{if}	Noise power in phase lock loop	- 159.6 dBm	
C/N	Carrier-to-noise ratio	+ 45.82 dB	$P_c - N_{if}$

This value is considered to be quite satisfactory for carrier tracking.

To summarize, it is evident that a 0.25-watt transmitter is sufficient to deliver data with error probability better than 1 part in 10^5 at the maximum range of 1032 nautical miles. Since this is a standard size transmitter, it is recommended for use.

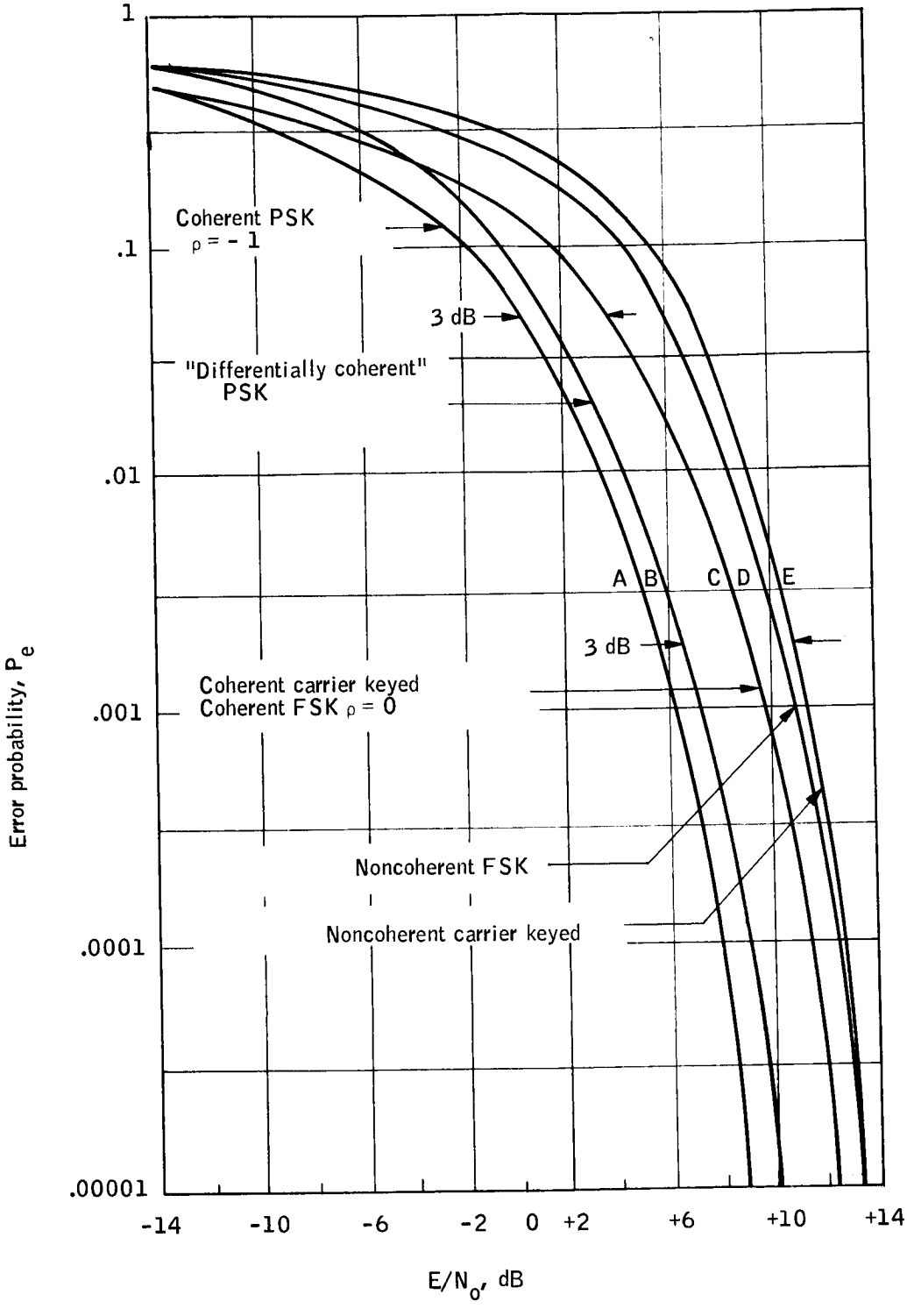

Figure 32. Probability of Error Versus Signal Energy/Noise Power Density

Beacon Transmitter

The communications subsystem considers the beacon as a back-up for the primary data link, and, as such, it must be prepared to deliver full data bandwidth power. For this type of operation the power requirements will be the same since the frequency difference is only 1.0 MHz, which is negligible in the propagation loss. The beacon must also be considered for its normal usage of delivering housekeeping data on a nonstorage basis upon command. This would consist of reading out a few frames of PCM data over the station at a data rate of no more than 1000 bits per second. Since this speed is much less than the ordinary scientific data rate there is no problem with power.

Command Receiver

Preliminary characteristics. -- The command system's function is to deliver error-free commands to the spacecraft subsystems at all times. Goddard Space Flight Center has published standards specifying the required performance characteristics of command systems. Assuming the tone digital command system will be used, a typical spacecraft command receiver will have the following general characteristics:

Frequency: 148 MHz

Noise figure at standard reference temperature (290°K): 9.0 dB

I.F. bandwidth: 36 kHz at 6.0 dB points

Audio bandwidth: 16.0 kHz

This receiver must have sufficient bandwidth to accept an 11 kHz subcarrier along with the modulation sidebands of the digital pulses which are amplitude modulated onto the subcarrier.

Examination of Appendix B shows that the tone digital command system uses a subcarrier and that the digits are multiples of periods of the subcarrier. In particular, Figure B1 shows the command word structure. For an assumed subcarrier of 11 kHz and the word structure indicated, the situation during the widest data bandwidth is that in which a series of zeros is being transmitted. In this case there will be 18 cycles of the subcarrier and a blank space which is somewhat uncertain because of the ratios of ones and zeros.

The blank space is arbitrarily assumed to have the same width as the pulse. Then, the criteria of $\frac{3}{2T_o}$ is assumed to define the necessary band width for the pulse whose width is 18 T_c long. For a subcarrier of 11 000 Hz this width is $\frac{18}{11\,000}$; thus, the bandwidth required is $\frac{3}{2\left(\frac{18}{11\,000}\right)} = \frac{33\,000}{36} =$ 916 Hz for the detector which detects the pulse envelope, provided no receiver

oscillator shifting or doppler shifting has occurred. However, as in the telemetry case, the doppler shift and oscillator shift can amount to 3500 Hz plus 680 Hz = 4180 Hz. Thus, the final detector width is set more by the drifts than by the pulse width. Since the drifts from doppler shift, etc., may be either positive or negative, the total bandwidth must be two times this value or 8360 Hz. For computational convenience it may be expressed as a dB bandwidth factor equal to 10 log 8360 = 39.2 dB. This value will be used to compute the noise bandwidth.

The standards state that the pulse error rate shall be less than 1 per 5000 bits for a 0 dB S/N of the subcarrier measured at the input of the decoder bandpass filter (para. 5.1 of the standards). In order to have a solid margin it will be assumed that 5.0 dB is used in preference to 0 dB.

Next, noise is considered generally. The antenna is the first source of noise. It will be looking at the warm earth, the sun, the galaxy, and cold space. In order to arrive at an average antenna temperature , the method of solid-angle sectoring developed by R. C. Hansen (ref. 19) was used. A sun temperature of 1.32×10^7 °K was used along with 1650°K galactic temperature and a warm earth temperature of 290°K. These are summed according to the respective gain of the sector of the antenna looking at the source and according to the steradian ratio of the source in relation to the total antenna. For purpose of the analysis, the antenna was sectioned into three gain regions with equivalent gains of 1, 0.5, and 0.25. The contributions are listed in Table 19.

TABLE 19. - TEMPERATURE SOURCE SUMMARY

Item of contribution	Gain	Temperature, °K	Steradian fraction	Temperature, °K
Earth	0.5	290	$\frac{2\pi}{4\pi}$	72.5
	1.0	290	$\frac{0.57\pi}{4\pi}$	41.5
Space	0.25	50	$\frac{0.3\pi}{4\pi}$	9.0
Galactic	1.0	1650	$\frac{0.137}{4\pi}$	18.0
Sun	1.0	1.32×10^7	$\frac{0.25}{(57)^2\,(4\pi)}$	80.0
	Total			221

The galactic temperature is that measured by Grote Reber at 160 MHz while the sun temperature extimate is from Hogg and Mumford's paper.

Transmission line loss (estimated at 1.0 dB) will add approximately 25°K to this figure. The mixer - i.f. amplifier combination was estimated at 9.0 dB which represents an effective temperature of 2000°K, so that the total effective temperature is 2246°K. The noise power for this temperature per cycle of bandwidth is $1.38 \times 10^{-23} \times 2.246 \times 10^{3} = 3.1 \times 10^{-20}$ watt or -165.1 dBm. The space loss for 148 mHz and 1032 n. mi. range is 141.6 dB.

Antenna gain is estimated to be 11 dB down from isotropic by virtue of pattern distribution and the fact that the antenna is maximized for 136 MHz operation. Polarization loss is estimated to be 3.0 dB.

The command system power requirements are summed below.

	Parameter	Value	Remarks
P_T	Ground transmitter power	+53 dBm	200-watt transmitter, remote from antenna
P_L	Ground transmitter line loss	-3 dB	
G_V	Vehicle antenna gain	-11 dB	Antenna optimized for 136 MHz
G_r	Ground antenna gain	+13 dB	
L_{sp}	Space loss between isotropic antenna	-141.6 dB	148 MHz, 1032 n. mi.
L_m	Spacecraft harness and misc loss	-3.0 dB	
L_p	Polarization loss	-3.0 dB	
P_r	Power at receiver	-95.6 dBm	
M_{L1}	Modulation loss	-2.5 dB	75% modulation of carrier
P_s	Subcarrier power	-98.1 dBm	
N_o	Noise power density	-165.0 dBm	9.0 dB noise figure receiver, 2246°K
B_{if}	Intermediate frequency amplifier bandwidth	39.2 dB	8360 Hz bandwidth

	Parameter	Value	Remarks
P_n	Power in noise	-125.8 dBm	
Sc/N	Subcarrier-to-noise ratio in 8360 Hz	27.7 dB	$P_s - P_n$
M_{L2}	Subcarrier modulation loss	-3.0 dB	100% modulation of subcarrier
S/N	Data	24.7 dB	

Figure 32 shows that this ratio is sufficient to keep error probability below 1 part in 10 000 and, judging by the rate of fall of the noncoherent carrier keyed curve, should be better than 1 in 10^6.

Thus, no major problems should be encountered in performance of the command function.

Ranging Transponder (For Telemetry)

Preliminary characteristics. -- The tracking or ranging transponder shown in block diagram of Figure 26 reflects the intended change planned by NASA Goddard for the range and range-rate system in that the reply frequency will be 2253 MHz and the interrogation frequency will be 1801 MHz. Since the mission time is long and the ground range and range-rate stations are so distributed as to preclude multistation simultaneous ranging, it was decided to use a single channel ranging transponder. Under these circumstances a portion of the available spectrum of the transponder may be utilized for data transmission.

The following analysis is based upon use of the transponder for data transmission purposes. The ranging problem will be covered subsequently.

Figure 33 shows the up and down-link spectrum for a single range tone set and superimposed data channel. The data channel width required, assuming phase modulation of a subcarrier with data rates as in the telemetry case and similar modulation factor, will occupy the same bandwidth. With this deviation ($\Delta\theta$ = 1.25), the S/N output of the discriminator is again 12.5 dB for a 9.0 dB input. At S-band, the galactic noise temperature is negligible since λm^2 is small. The atmospheric noise contribution for five degrees above the horizon is 25°K according to Hogg and Mumford. Published data on the range and range-rate system states that the receiver noise figure is 3.0 dB for which the equivalent noise is 300°K. Assuming an antenna feed-line loss equivalent to 100°K and ambient temperature of 290°K, so that the total noise is 715°K, the noise power than is $1.38 \times 10^{-23} \times 715 = 0.987 \times 10^{-20}$ watt/Hz or -170.0 dBm per Hz of bandwidth. For a bit-error probability of

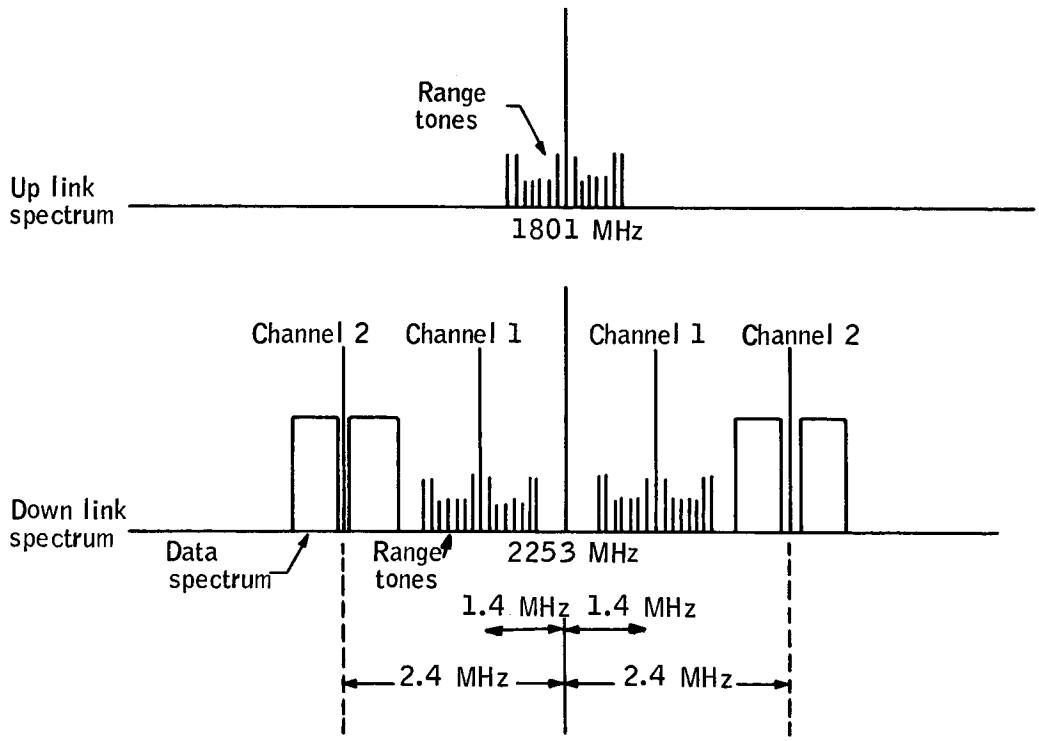

Figure 33. Spectrum of S-Band Transponder with Data and Range Tones

1 part in 10 000 the signal power per bit per unit of noise power in a one-cycle bandwidth is 12.50 dB for a noncoherent carrier keyed system (ref. 6) See Figure 32. This estimate is considered a worst-case estimate. This value is the same as that of the discriminator output.

Antenna gains. -- For this spacecraft the antenna pattern gain is assumed to be 8 dB below isotropic for low angles above the horizon, and a 1.0 dB polarization loss is also assumed.

The published data (ref. 20) on the range and range-rate receivers gives an antenna gain of 37.0 dB.

Space loss. -- For data transmission purposes the range for five degrees elevation is 1032 n. mi. The path loss, computed by the usual equation, is 164.5 dB for 2253 MHz.

Miscellaneous losses. -- Spacecraft feed-line and filter losses are estimated at 2.0 dB.

Link computation. -- The transponder telemetry values used in the link computation by the usual range equation are listed below.

G_v	Vehicle antenna gain	8.0 dB
G_r	Ground antenna gain	-37 dB
P_n	Noise power in 32 kHz bandwidth	-125 dBm
L_{sp}	Space loss	164.5 dB
L_m	Miscellaneous losses	2.0 dB
P_T	PM threshold required	10.0 dB
M_I	Modulation improvement	-12.5 dB
L_ϕ	Polarization loss	3.0 dB
	P_d = Total =	13 dBm = 20mW

P_c Subcarrier power $= \frac{20}{0.56} = 35.8$ mW

Since this data is on a separate subcarrier this value must be added to the total for tracking which is discussed in the following section.

Transponder Ranging

The normal tracking function of the transponder has been analyzed in considerable detail by Goddard Space Flight Center as well as by others, and a specification has been generated by Goddard to insure that it matches with the ground portions of the system. A copy of this specification is included as Appendix D to this report. Effective power output in carrier and data side bands is listed in the specification as 1/2 watt for ranges to 50 000 km, which is 27 00 n. mi., and, of course, greatly in excess of the HDS ranging requirements. Minimum power output is specified as 0.25 watt. Thus, 0.25 watt is the most likely value to be employed since range is only 1032 n. mi. maximum. In this case, the combined power output for data and ranging will be 0.25 + 0.0358 = 0.286 watt.

The tracking signal paths of these transponders has not been analyzed here since the margins appear to be very much in excess of HDS requirements. This is evident from the power values given in Appendix D and from the telemetry signal level computations. In the tracking case where tones are used, the normal operation employs narrow-band tracking filters to keep the system bandwidth small.

Similarly, the link from the ground range and range-rate transmitter is also covered since the necessary receiver sensitivities and noise figures are detailed in the specification.

SUMMARY

A complete system block diagram is shown in Figure 26. It consists of a beacon transmitter, a telemetry transmitter, a command receiver, logic circuits and gates, and two range and range-rate transponder systems. The drawing shows the following capabilities:

Function	Alternate path
Telemetry	Beacon transmitter
	Transponder no. 1
	Transponder no. 2
Beacon	Telemetry transmitter
Command reception	Transponder no. 1
	Transponder no. 2
Range and range-rate transponder	Transponder no. 2

With this system considerable flexibility exists to permit continued functional operation over long time periods even after failure of individual elements.

General results for all communications systems are tabulated in the following summary.

	Telemetry transmitter	Beacon transmitter	Command receiver	Tracking transponder
Input freq			148 MHz	1801 MHz
Output freq	137.0 MHz	136.0 MHz		2253 MHz
Input signal	PCM digital	PCM digital		-110 dBm
Power output	0.25 watt	0.25 watt		0.3 watt
Freq stability	0.005%	0.005%		0.005%
Modulation	Phase	Phase	AM	Phase
Data rate	4.0 kilobits/sec	4.0 kilobits/sec	50 bits/sec	Range tones and 4.0 kilobits/sec

The above table highlights the details of all systems and further details are included in the communications subsystem appendices.

The transponder has some additions which are referred to but not covered in the appendix. The first addition is a subcarrier oscillator which may be phase modulated by the data as shown in Figure 26. The subcarrier is centered on one of the unused subcarrier center frequencies (2.4 MHz example). This unit should contain a crystal controlled oscillator to insure its position in the spectrum. Phase modulation is applied by the telemetry data stream and this signal is applied to the transponder modulator as is the ranging signal from the receiver of the transponder. Phase deviation of this system must be adjusted so that it is consistent with a normal two-channel transponder as detailed in the range and range-rate transponder specification in Appendix D.

The second addition is that of a command take-out filter which is also shown in Figure 26. This provision permits up-link command on range and range-rate ground stations.

Figure 26 was also used to analyze the reliability of the system. Estimates were made of the number of components in each of the boxes and these estimates used to determine the reliability. The results of these reliability studies are included in Appendix E. The decision to recommend use of two ranging transponders is a result of these reliability studies.

The reliability studies showed that the system operating in its normal mode had a reliability figure of 0.743. By use of alternative paths, i.e., beacon and S-band transponder, the figure improves to 0.849. The latter figure is based upon the assumption that the S-band transponder does not fail. This assumption, of course, is difficult to justify; thus, a redundant transponder is considered. With a redundant S-band transponder, the functional reliability moves up to 0.977 for a one-year operating period. A redundant S-band transponder is recommended for these reasons

Addition of the command separation filter and the subcarrier voltage control oscillator (VCO) assembly, described previously, permit operation as an integrated S-band system. Ranging, command, and telemetry transmission may all be performed simultaneously or independently. The beacon (136 MHz) would still be required since the S-band system employs this signal as an initial acquisition aid for training the S-band antenna because it is a narrow beam-width system.

In this case, two transponders would be required, but the telemetry transmitter and command receiver may be dispensed with. Since the beacon retention is necessary and it is important for acquisition purposes, it appears necessary to use a redundant beacon in a unified S-band system.

Some effort has been spent in examining "off-the-shelf" hardware for this program. Relatively little exists since the task is highly specialized, particularly in relation to environmental considerations. For vhf telemetry equipment there is a moderate amount available in the 216 to 260 MHz range. Generally, the efficiencies at 136 to 137 MHz can be expected to be better than for 200 MHz equipment, so an estimation of sizes for the 200 MHz range appears reasonable.

In the case of the tracking transponder there are size comments in the transponder specification in Appendix C. Sizes were also obtained from Motorola for 3-channel systems.

Honeywell Inc. estimated size, weights, and dc-power inputs of hardware that can probably be developed are shown in Table 20 with some comparison figures for Tiros equipment which exists and satisfies about the same requirements.

TABLE 20. - COMMUNICATIONS HARDWARE POWER, WEIGHT, AND VOLUME

Item	HI (estimated)	Tiros (RCA)
137 MHz transmitter		
Volume	12 cu in.	20 cu in.
Weight	1.0 lb	1.0 lb
Power input	2.0 watts	2.0 watts
Power output	0.25 watt	0.25 watt

TABLE 20. - COMMUNICATIONS HARDWARE POWER, WEIGHT, AND VOLUME - Concluded

136 MHz beacon transmitter		
Volume	12 cu in.	20 cu in.
Weight	1.0 lb	1.0 lb
Power input	2.0 watts	2.0 watts
Power output	0.25 watt	0.25 watt
148 MHz channel receiver		
Volume	12 cu in.	37 cu in.
Weight	1.5 lb	1.25 lb
Power input	0.25 watt	0.2 watt
Tracking (1 channel) transponder		Motorola (3 channel)
Volume	216 cu in.	400 cu in.
Weight	6.0 lb	8.0 lb
Power input	16.0 watts	28.0 watts

Additional allowances for antenna weights have been incorporated into the structures section of the study effort.

At this time there appears to be no problem in equipment procurement. The longest lead item appears to be the transponder which requires some moderate amount of engineering because of the subcarrier oscillator and command filter assembly. A 10-months lead time is estimated for this unit. The other pieces are estimated at 6 to 8 months.

CONCLUSIONS AND RECOMMENDATIONS

The communications subsystem study has resulted in the following conclusions and recommendations:

- The NASA STADAN network can completely satisfy the program requirements for data acquisition, command, and tracking. No additions to or alterations of STADAN are required.
- The 136 MHz data acquisition facilities of STADAN are recommended for the primary data link.

- The high accuracy orbital position determination requirement for this program dictates the use of the S-band range and range-rate system of the STADAN.

- The communications subsystem recommended for use on the HDS spacecraft requires no development. It is an assembly of hardware using well proven techniques. It is recommended that existing flight proven devices be used wherever possible, such as the Tiros vhf equipment.

PRECEDING PAGE BLANK NOT FILMED.

APPENDIX A

DEFINITION OF HDS SAMPLING REQUIREMENTS AND METHODOLOGY

PRECEDING PAGE BLANK NOT FILMED.

APPENDIX A

DEFINITION OF HDS DATA SAMPLING REQUIREMENTS AND METHODOLOGY (Ref. 21)

SAMPLING REQUIREMENTS

This analysis was made to refine the results of earlier Part I studies. The initial data sampling requirements were defined only in terms of the space cell distribution assigned to the L4 (2.5) locator in the Part I Study. Thus, the total sample requirements (global, one year) were seriously under-estimated for locators such as L1 (3.0), where a large overall increase in the number of space cells is needed, along with increases in the sample size per cell, to provide an adequate basis for the Fourier time series analysis. An interpolation method was developed, therefore, which provides estimates of the number of space cells required per 10° latitude interval for each of the 11 recommended locators. (The northernmost latitude interval for the baseline sun-synchronous orbit only extends from 80 to 82.6 degrees.)

The interpolation of space cells requirements was based upon the numbers determined for locators L4 (2.5) and L1 (3.0) in the Part I study; these numbers represent the opposite extremes for the 11 locators being considered. The interpolation of the required number of space cells for a particular locator was based upon its value of $\hat{\sigma}$ (estimated uncertainly) relative to the $\hat{\sigma}$ values of locators L4 (2.5) and L1 (3.0). This approach was adopted because the ratio of the overall number of space cells for L4 (2.5) and L1 (3.0), 0.53 (408/768), is approximately the same as the ratio of their $\hat{\sigma}$ values, 0.55 (0.486/0.885). This appeared to reflect a basic relationship between the quantization interval between adjacent cells (which essentially determines the number of space cells required for a given locator) and the estimated uncertainty of samples collected within an individual space cell (which serves to establish the required sample size for each space cell). Because of the general nature of the interpolation method, no specific asignment of cell dimensions was made for the nine additional locators; instead, the numbers of the required space cells were determined on an aggregate basis for each 10° latitude interval. Table A1 presents the space cell distributions as determined for the various locators. It should be noted that there is an increase in the number of space cells (and a reduction in their latitudinal and longitudinal dimensions) extending from locator L4 (2.5) to L1 (3.0).

The required sample sizes per space cell for the 11 locators have already been defined. Thus, the total data sampling requirements can be established for each locator over 10° latitude intervals, using the newly defined space cell distributions. These requirements, shown in Table A2, provide a baseline from which the effects of random radiometer errors and data telemetry losses can be evaluated prior to the establishment of an overall sampling methodology.

The next step in the analysis was to determine, for the various locators, the increases in cell sample size ΔN needed to compensate for the effects of random radiometer errors in order to maintain a given level of confidence in the Fourier time series analysis of the HDS data. A study was made of the various locators relating a given size radiance error to an equivalent tangent height error, which in turn can be used to compute ΔN. In this analysis, a value of $0.0033\ W/m^2$ - sr was adopted for the error standard deviation in radiance σN. This value reflects the $3\ \sigma$ value of $0.01\ W/m^2$ - sr which has been established as a basic radiometer design requirement.

The computation of ΔN's was based primarily upon the σN vs σe (equivalent error standard deviation in tangent height) graph for the mean profile case. However, a detailed analysis was also made for a minimum profile case to determine the additional cell samples which would be required for special error compensation at high latitudes (i.e., 50 to 90°) in the winter season (i.e., the four 28-day time cells spanning the months December - February). This latter study led to a complete re-evaluation of the minimum profile σN versus σe relationship for locators L1 (3.0) and L1 (2.0), drastically reducing the values of σe (for a given σN) presented in reference 22 by factors of 20 and 22.5, respectively. This reduction, in turn, even more drastically decreased the additional ΔN requirements for these two locators, since $\Delta N = 36\ \sigma e^2$. As a result, it was shown that relatively small additional samples were required, in the case of all locators, to compensate for random radiometer error effects in low radiance profiles at higher latitudes in winter.

Table A3 summarizes the results of the sample error compensation analysis. It should be noted that the error compensation, viewed in terms of the percentage of additional samples required, is very significant for locators L2 (0.95) and L2 (0.06), far less important for locators L2 (0.3), L1 (0.2) and L2 (0.05), and almost negligible for the other six locators.

A final step in the analysis was to consider the additional samples required to compensate for data losses resulting from telemetry gaps, garbled transmissions, and other forms of operational degradation. The best available estimate is that such losses will be approximately five percent of the total data sample. A multiplicative factor of 1.05 was applied, therefore, to the sampling requirements listed in Table A2 after they had been adjusted upward to compensate for random radiometer errors. Table A4 lists the data sampling requirements for the various locators which result when errors and losses are both taken into account.

SAMPLING METHODOLOGY

Data sampling methodology was developed which would be operationally simple and readily implementable by the data handling subsystem. No attempt was made, therefore, to achieve an abstract level of optimization: instead, the approach was directed toward practical realization of a basic

sampling methodology which could be occasionally modified to account for various special situations as they arise (e.g., telemetry gaps, the occurrence of stratospheric warmings).

The starting point for this study was an examination of the profile acquisition rates (profiles/min) needed to satisfy the error and loss compensated set of data sampling requirements. Table A5 lists these rates for the eleven locators in terms of 10° latitude intervals. These rates cover a range from 0.127 to 3.473 profiles/min. Since the nominal rotation rate of the spacecraft is three rpm, it is immediately obvious that a single, passive radiometer operating only in the down scanning mode cannot completely satisfy the L1 (3.0) data sampling requirement between 60 to 80° latitude at the desired 95-percent level of confidence.

The implications of very low data acquisition rates must also be carefully examined to avoid too large a space interval between successive samples. At a rate of 0.127 profile/min, the satellite, with its ground speed of slightly more than 4° latitude/min, would traverse a distance of 32° latitude between profile acquisitions. This separation distance is viewed as too large, even though it has been shown (by recent computer studies of data coverage from a 270 n. mi. sun-synchronous orbit) that even coverage of all space cells is attainable within a 28-day map period with data acquisition rates as low as 0.25 profile/min. A rate of 0.127 profile/min may also satisfy the data requirements for the Fourier time series analysis. Nevertheless, the separation distance should prabably not exceed 10° latitude; otherwise, there would not be a satisfactory basis for studying small-scale time/space correlations between successive radiance profiles and for making detailed error analyses along individual orbits. For this reason, a minimum profile acquisition rate of 0.375 profile/min was adopted, even though this rate does provide 28-day data samples in low-latitude cells which are considerably in excess of the stipulated requirements for Fourier time series analysis at the 95-percent confidence level.

The choice of data acquisition rates has been restricted, therefore, to a range of 0.375 to 3.0 profile/min. In addition, the selection of specific rates has been limited to the following fractions of the maximum profile acquisition rate: 1/8, 1/7, 1/6, 1/5, 1/4, 1/3, 1/2, and 1/1 (corresponding to rates of 0.375, 0.429, 0.50, 0.60, 0.75, 1.0, 1.5, and 3.0 profiles/min). The use of these fractions serves to provide even spacing between samples acquired at a given rate and also simplifies the mechanization of the data handling subsystem. The use of fractions such as 2/7 or 5/13 would not provide these decisive advantages, although they could provide a nominally closer fit of measured to required numbers of profiles.

By examining Table A5 in terms of the data acquisition rates listed above, it is obvious that a large number of possible combinations of rates can conceivably be employed. For example, one constant rate can be selected for the entire orbit, or the rate can be varied at 10° latitude intervals. At this stage in the overall HDS study program, it is largely a matter of judgment as to which rate combination should be selected. Table A6 lists three possible rate combinations which could be applied to three levels of cumulative data sampling requirements (at the 95 percent confidence level). The use of the "+"notation on the locator identifiers indicates that the requirements for certain other locators have been completely subsumed. At the low end of the

cumulative requirements spectrum a constant sampling rate of 0.375 profile/min appears to offer a feasible approach. This rate provides a sample excess of 62 percent with respect to the culumative requirement, L2 (0.95)+. This data excess, it must be pointed out, is with regard to the 95 percent confidence level. Such data are not wasted, however, since they can be used to analyze the three designated locators at levels of confidence above 95 percent and to analyze the other locators with nominally higher requirements at levels of confidence below 95 percent.

For the intermediate data requirement level, L2 (0.50) +, two different acquisition rates have been selected. The lower rate serves to reduce the data excess between latitudes from 0 to 30° At the highest cumulative requirement level, L1 (3.0) + , three acquisition rates are used in order to scale the measured samples down closer to those required over the latitude intervals 0 to 30° , 30 to 50°, and 50 to 82°.6.

The total one year samples obtained by the three data acquisition schemes outlined above range from 196 586 to 912 702 profiles. For the intermediate requirement level, 336 570 profiles are obtained; this total sample would permit seven of the eleven locators to be analyzed over all latitude intervals at a confidence level of at least 95 percent.

The average radiometer data acquisition rates, in terms of profiles per orbit, for the three sampling schemes described above are 35.25, 60.35, and 163.28. If an allowance of 5540 bits/profile is made for the radiometric data sample and if an allowance of 100 000 bits/orbit is made for the attitude determination and spacecraft status data, then the total required memory capacities for the three sampling schemes are 295 285 bits/orbit for L2 (0.95)+, 434 339 for L2 (0.50) +, and 1 004 571 for L1 (3.0) +. These values are all within the range of feasibility for solid-core memories.

Further analysis of the sampling methodology problem was based upon an examination of the sensitivity of the 95-percent confidence level to changes in the number of profiles acquired for the various space/cell distributions. It can be shown that the confidence interval on σ (the measure of uncertainty in the statistical analysis of a cell sample) is given by

$$I_c = \left\{ \sqrt{1 + \left[\frac{2}{m\,(N-1)\,(1-P/100)}\right]^{1/2}} - \sqrt{1 - \left[\frac{2}{m\,(N-1)\,(1-P/100)}\right]^{1/2}} \right\} \hat{\sigma}$$

where I_c is the confidence interval, $\hat{\sigma}$ the sample estimate of σ (the true standard deviation), m the number of time cells, N the number of samples per cell, and P the percent level of confidence. It is obvious, for a given value of I_c , that P decreases as (N-1) decreases. If, for example, the value of (N-1) associated with P = 95 percent decreases to (N-1)/2, then P decreases to 90 percent (for a constant I_c). The following table lists some representative multiples of (N-1) versus percent confidence levels.

(N-1) multiple	Percent level of confidence
5	99
2	97.5
1	95
0.67	92.5
0.5	90
0.33	85
0.25	80

It is apparent, from these values, that the cell sample can be considerably reduced and a useful level of confidence will still be obtained. A 95-percent level of confidence is generally regarded as very good (and is the level adopted in the statistical design of many experiments), a 90-percent level can be regarded as good, 85 percent as fair, and 80 percent (or even lower) as still useful. The assignment of these adjectival descriptors is essentially a matter of opinion which reflects the degree of calculated risk which the experimenter is willing to accept that the eventual statements concerning the statistical results are indeed correct. At the 95- percent level of confidence, the odds of being correct regarding the statistical properties of an individual time/space cell are 19 to 1; at 90 percent, 9 to 1; at 80 percent, 4 to 1; at 50 percent, 1 to 1, or even odds. At this point, the problem changes from one of statistical definition to one of decision making regarding the acceptance of given levels of calculated risk for the many hundreds of time/space cells which constitute the basic HDS experiment. The analysis of this decision-making process lies outside the scope of this study but clearly represents an area of further investigation. It should be possible to establish a value function for the different levels of statistical confidence which could be selected for the HDS experiment and thereby provide the basis for trading off experiment value versus system cost.

In the present instance it is worthwhile to examine possible compromises in confidence level at the high requirement end of the HDS experiment, i.e., as defined by the L7, L1, (1.0), L1 (2.0), and L1 (3.0) locators. As shown in Table A6, the L1 (3.0) + sample is approximately three times as large as the L2 (0.50) + sample. If a level of confidence of at least 95 percent is provided for all eleven locators, this results in extremely high confidence levels for locators such as L2 (0.95) and L4 (0.5) at the lower end of the requirements spectrum. However, if the confidence levels at the high requirement end can be relaxed so as still to achieve at least a fair to good level of confidence, then a very considerable reduction can be made in the total sampling requirement and data acquisition rates for all eleven locators.

The sampling problem was reexamined, therefore, in terms of providing a reasonable compromise which would attain a 95 percent level of confidence for most locators but which could be relaxed in a relatively few instances to values of 90 - and 85 - percent confidence. The results of this analysis, which was necessarily conducted on a qualitative basis, led to the formulation of the recommended sampling methodology outlined in Table A7. Three data acquisition rates were selected: 0.429 profile/min from 0 to 30° latitude, 0.750

profile / min from 30 to 60°, and 1.00 profile/min from 60 to 82.6°. The total one year data sample collectable at these rates amounts to 378 508 profiles, a value which includes an overall loss allowance factor of five percent. The useful sample, then, would constitute 360 483 profiles.

The levels of confidence attainable in analyzing the cell samples with the recommended methodology are shown in Table A8 as a function of 10° latitude intervals. These results indicate that a confidence level of at least 98 percent can be achieved for three locators, of at least 95 percent for seven locators, of at least 89 percent for ten locators, and at least 82 percent for all eleven locators. Over the latitude range 0 to 50°, the confidence levels for all locators exceed 93 percent. These results are regarded as quite satisfactory, overall, since the L1 (3.0) locator has a very demanding set of data sampling requirements when considered exclusively at the 95-percent confidence level.

The average number of profile samples acquired per orbit with the recommended sampling methodology is 67.88. Based upon an allowance of 5540 bits/profile for the radiometric data and 100 000 bits/orbit for the attitude determination and spacecraft status data, a total memory capacity of 476 055 bits/orbit would be required, a value well within the limits of feasibility for solid-core memories.

The results of the various studies described above represent a preliminary attempt to size the experiment in such terms as to provide a reasonable basis for potential application to a large number of horizon locators. For conveience, attention has been limited to 11 locators recommended in the Part I study results; the HDS data sample will, of course, be generally applicable to the study of various other locators whose statistical properties are such that their sampling requirements lie within the wide range covered between the L4 (2.5) and L1 (3.0) locators. For example, the recommended sample methodology should provide an adequate basis for Fourier time series analyses of locators such as L3 (7.5) and of locators in the L1, L2, and L4 families with other values of normalized integral normalized radiance, such as L2 (0.9), L4 (7.5), and L4 (1.0).

In view of the above discussion, the question naturally arises as to whether the so-called basic sampling requirements (i.e., a global, one-year sample of approximately 110 000 profiles, defined on the basis of the L4 (2.5) locator) can satisfy the HDS experiment objectives. To investigate this question, a minimum sampling methodology was defined, based upon a constant data acquisition rate of 0.21 profile/min. This rate would provide a global sample of 8472 profiles per 28-day map period and 110 136 profiles for a one-year operational period. If the number of data samples thereby obtained are compared with those required for the various locators (Table A4), it is possible to compute the level of confidence for each locator within 10° latitude intervals. The results of this computation, presented in Table A9, indicate that levels of confidence of 83 percent or better are obtainable for seven locators. However, for the remaining locators, i.e., L7, L1(1.0), L1 (2.0), and L1 (3.0), the confidence levels are very drastically reduced at latitudes above 40° to 50°. As pointed out earlier, the problem at this point passes beyond that of statistical definition to one of decision making, wherein follow-on studies are recommended.

TABLE A1. - NUMBER OF SPACE CELLS PER 10° LATITUDE INTERVAL FOR RECOMMENDED LOCATORS

Latitude interval, deg	Locator								
	L4 (0.5) L2 (0.95) L4 (2.5)	L2 (0.06)	L1 (0.2)	L2(0.3)	L2 (0.5)	L1 (1.0)	L7	L1 (2.0)	L1 (3.0)
0-10	17	17	17	17	17	17	17	17	17
10-20	17	17	17	17	17	17	17	17	17
20 30	18	22	24	24	26	28	30	34	42
30-40	36	38	38	38	38	38	38	40	42
40-50	36	38	42	42	44	46	48	50	60
50-60	36	38	42	42	44	46	48	50	60
60-70	18	23	29	30	32	35	39	45	60
70-80	18	23	29	30	32	35	39	45	60
80-82.6	8	10	13	14	15	15	18	22	26
TOTALS:									
North Hemisphere - 1 time cell	204	226	251	254	265	277	294	320	384
Globe - 1 time cell	408	452	502	508	530	554	588	640	768
Globe - 13 time cells	5304	5876	6526	6604	6890	7202	7644	8320	9984

TABLE A2. - DATA SAMPLING REQUIREMENTS PER 10° LATITUDE INTERVAL FOR RECOMMENDED LOCATORS[a]

Latitude interval, deg	Locator										
	L4 (0.5)	L2 (0.95)	L4 (2.5)	L2 (0.06)	L2 (0.3)	L1 (0.2)	L2 (0.5)	L7	L1 (1.0)	L1 (2.0)	L1 (3.0)
0-10	272	272	272	272	272	272	272	544	340	272	289
10-20	272	272	272	272	272	289	323	54	340	272	306
20-30	288	288	288	352	408	408	858	615	518	816	1 176
30-40	576	576	576	608	741	627	1 349	950	722	1 060	1 092
40-50	576	576	576	608	840	714	1 298	1 388	1 472	1 350	2 130
50-60	576	576	576	608	735	966	902	1 464	1 978	1 900	3 930
60-70	306	432	486	621	1 230	1 421	992	2 613	4 235	4 320	7 860
70-80	486	594	684	1 012	1 710	1 740	1 632	3 510	4 585	5 445	8 220
80-82.6	248	264	336	480	826	780	780	2 322	1 770	2 552	2 418
TOTALS:											
North hemisphere - 1 time cell	3 600	3 850	4 066	4 833	7 034	7 217	8 406	14 050	15 960	17 987	27 421
Globe - 1 time cell	7 200	7 700	8 132	9 666	14 068	14 434	16 812	28 100	31 920	35 974	54 842
Globe - 13 time cells	93 600	100 100	105 716	125 658	182 884	187 642	218 556	365 300	414 960	467 662	712 946

[a]Based upon a 95% confidence level

TABLE A3. - TOTAL ADDITIONAL SAMPLES REQUIRED FOR RANDOM ERROR COMPENSATION

ΔN, additional samples required				
Locator	Mean profile	Minimum profile	Total	Percent of total sampling requirement
L4 (0.5)	318	6	324	0.35
L2 (0.95)	14 056	333	14 389	14.37
L4 (2.5)	0	3	3	0.003
L2 (0.06)	48 301	782	49 083	39.06
L2 (0.3)	7 529	157	7 686	4.20
L1 (0.2)	3 198	326	3 524	1.80
L2 (0.5)	4 272	49	4 321	1.83
L7	1 529	346	1 875	0.49
L1 (1.0)	216	37	253	0.05
L (2.0)	83	32	115	0.02
L1 (3.0)	100	50	150	0.02

TABLE A4. - DATA SAMPLING REQUIREMENTS FOR RECOMMENDED LOCATORS, COMPENSATED FOR ERRORS AND LOSSES[a]

Latitude interval, deg	Locator										
	L4 (0.5)	L2 (0.95)	L4 (2.5)	L2 (0.06)	L2(0.3)	L1 (0.2)	L2 (0.5)	L7	L1 (1.0)	L1 (2.0)	L1 (3.0)
0-10	287	327	286	397	298	291	291	574	357	286	304
10-20	287	327	286	397	298	309	345	574	357	286	321
20-30	303	346	302	514	446	436	917	649	544	857	1 235
30-40	607	692	605	888	811	670	1 442	1 002	758	1 113	1 147
40-50	607	692	605	888	919	763	1 388	1 570	1 546	1 418	2 237
50-60	607	692	605	888	804	1 033	964	1 545	2 078	1 995	4 127
60-70	322	519	510	907	1 346	1 519	1 061	2 757	4 449	4 537	8 255
70-80	512	713	718	1 478	1 871	1 860	1 745	3 703	4 817	5 718	8 633
80-82.6	216	317	353	701	904	834	834	2 450	1 859	2 680	2 539
TOTALS:											
North hemisphere - 1 time cell	3 793	4 625	4 270	7 058	7 697	7 715	8 987	14 824	16 765	18 890	28 798
Globe - 1 time cell	7 586	9 250	8 540	14 116	15 394	15 430	17 974	29 648	33 530	37 780	57 596
Globe - 13 time cells	98 618	120 250	111 020	183 508	200 122	200 590	233 662	385 424	435 890	491 140	748 748

[a]Based upon a 95% level

TABLE A5. PROFILE ACQUISITION RATES (PROFILES/MIN) NEEDED TO SATISFY COMPENSATED DATA SAMPLING REQUIREMENTS[a]

Latitude interval, deg	Locator										
	L4 (0.5)	L2 (0.95)	L4 (2.5)	L2 (0.06)	L2 (0.3)	L1 (0.2)	L2 (0.5)	L7	L1 (1.0)	L1 (2.0)	L1 (3.0)
0-10	0.128	0.145	0.127	0.177	0.133	0.129	0.129	0.255	0.159	0.127	0.135
10-20	0.127	0.145	0.127	0.176	0.132	0.137	0.153	0.254	0.158	0.127	0.142
20-30	0.133	0.152	0.133	0.226	0.196	0.192	0.403	0.285	0.239	0.377	0.543
30-40	0.265	0.302	0.264	0.388	0.354	0.292	0.629	0.437	0.331	0.486	0.501
40-50	0.263	0.300	0.262	0.385	0.398	0.331	0.601	0.680	0.670	0.614	0.969
50-60	0.263	0.296	0.259	0.380	0.344	0.442	0.413	0.662	0.890	0.855	1.768
60-70	0.135	0.218	0.215	0.382	0.566	0.639	0.446	1.160	1.872	1.909	3.473
70-80	0.197	0.274	0.276	0.568	0.720	0.715	0.671	1.424	1.853	2.199	3.320
80-82.6	0.177	0.215	0.239	0.475	0.612	0.565	0.565	1.660	1.259	1.816	1.720

[a] Based upon a 95% confidence level

TABLE A6. - POSSIBLE COMBINATIONS OF PROFILE ACQUISITION RATES NEEDED TO SATISFY CUMULATIVE DATA SAMPLING REQUIREMENTS (ERROR AND LOSS COMPENSATED)[a]

Latitude interval, deg	L2 (0.95) +			L2 (0.50) +			L1 (3.0) +		
	Profile acquisition rate, profile/min	No. of samples		Profile acquisition rate, profile/min	No. of samples		Profile acquisition rate, profile/min	No. of samples	
		Measured	Required		Measured	Required		Measured	Required
0-10	.375	843	327	.429	963	397	.600	1 349	574
10-20	.375	846	327	.429	967	397	.600	1 354	574
20-30	.375	853	346	.429	975	917	.600	1 364	1 235
30-40	.375	859	692	.750	1 718	1 442	1.00	2 291	1 442
40-50	.375	865	692	.750	1 731	1 388	1.00	2 308	2 237
50-60	.375	875	692	.750	1 751	1 033	3.00	7 002	4 127
60-70	.375	891	519	.750	1 783	1 519	3.00	7 131	8 255
70-80	.375	975	718	.750	1 950	1 871	3.00	7 800	8 633
80-82.6	.375	554	353	.750	1 107	904	3.00	4 428	2 680
TOTALS:									
North hemisphere - 1 time cell		7 561	4 666		12 945	9 868		35 027	29 757
Globe - 1 time cell		15 122	9 332		25 890	19 736		70 054	59 514
Globe - 13 time cells		196 586	121 316		336 570	256 568		910 702	773 682
Excess percent		62			31			18	

[a]Based upon a 95% confidence level

NOTE: L2 (0.95) + subsumes L4 (0.5), L2 (0.95)
L2 (0.5) + subsumes L2 (0.95) +, L2 (0.06), L2 (0.3), L1 (0.2)
L1 (3.0) + subsumes L2 (0.5) +, L7, L1 (1.0), L1 (2.0)

TABLE A7. - NUMBER OF DATA SAMPLES OBTAINABLE WITH RECOMMENDED VARIABLE - RATE SAMPLING METHODOLOGY

Latitude interval, deg	Data acquisition rate, profile/min	Number of data samples
0-10	.429	963
10-20	.429	967
20-30	.429	975
30-40	.750	1718
40-50	.750	1731
50-60	.750	1751
60-70	1.00	2377
70-80	1.00	2600
80-82.6	1.00	1476

TOTALS:

North hemisphere - 1 time cell - 14 558

Globe - 1 time cell - 29 116

Globe - 13 time cells - 378 508

TABLE A8. - LEVEL OF CONFIDENCE IN DATA SAMPLES OBTAINED WITH RECOMMENDED SAMPLING METHODOLOGY

Latitude interval, deg	Locator										
	L4 (0.5)	L2 (0.95)	L4 (2.5)	L2 (0.06)	L2 (0.3)	L1 (0.2)	L2 (0.5)	L7	L1 (1.0)	L1 (2.0)	L1 (3.0)
0-10	98.5	98.3	98.5	97.9	98.5	98.5	98.5	97.0	98.1	98.5	98.4
10-20	98.5	98.3	98.5	97.9	98.5	98.4	98.3	97.0	98.2	98.5	98.3
20-30	98.4	98.2	98.5	97.4	97.2	97.8	95.3	96.7	97.2	95.6	93.7
30-40	98.2	98.0	98.2	97.4	97.6	98.0	95.8	97.1	97.8	96.8	96.7
40-50	98.2	98.0	98.3	97.4	97.3	97.8	96.0	95.5	95.5	95.9	93.5
50-60	98.3	98.0	98.3	97.5	97.7	97.0	97.2	95.6	94.1	94.3	88.2
60-70	99.3	98.9	98.9	98.1	97.2	96.8	97.8	94.2	90.6	90.4	82.6
70-80	99.0	98.6	98.6	97.2	96.4	96.4	96.6	92.9	90.7	89.0	83.4
80-82.6	99.1	98.9	98.8	97.6	96.9	97.2	97.2	91.7	93.7	90.9	91.4

TABLE A9. - LEVEL OF CONFIDENCE IN DATA SAMPLES BASED UPON MINIMUM METHODOLOGY FOR BASIC DATA REQUIREMENTS, PERCENT

Latitude interval, deg	Locator										
	L4 (0.5)	L2 (0.95)	L4 (2.5)	L2 (0.06)	L2 (0.3)	L1 (0.2)	L2 (0.5)	L7	L1 (1.0)	L1 (2.0)	L1 (3.0)
0-10	97.0	96.5	97.0	95.8	96.8	96.9	96.9	93.9	96.2	97.0	96.8
10-20	97.0	96.5	97.0	95.8	96.9	96.7	96.4	93.9	96.2	97.0	96.6
20-30	96.8	96.4	96.8	94.6	95.3	95.5	90.4	93.2	94.3	91.1	87.1
30-40	93.7	92.8	93.7	90.8	91.6	93.0	85.0	89.6	92.1	88.4	88.1
40-50	93.7	92.9	93.8	90.8	90.5	92.1	85.7	83.8	84.1	85.4	76.9
50-60	93.8	92.9	93.8	90.9	91.8	89.5	90.2	84.2	78.8	79.7	57.9
60-70	96.8	94.8	94.9	90.9	86.5	84.8	89.4	72.4	55.5	54.6	17.3
70-80	95.3	93.5	93.4	86.4	82.8	82.9	84.0	66.9	55.9	47.6	21.0
80-82.6	95.8	94.9	94.3	88.7	85.4	86.5	86.5	60.5	70.1	56.8	59.1

PRECEDING PAGE BLANK NOT FILMED.

APPENDIX B
TONE DIGITAL COMMAND STANDARD

PRECEDING PAGE BLANK NOT FILMED.

PRECEDING PAGE BLANK NOT FILMED.

APPENDIX B

TONE DIGITAL COMMAND STANDARD (Ref. 23)
(Dated 1/15/63)

1.0 INTRODUCTION

The Tone-Digital Command System was developed for spacecraft that require simple, real-time, ON-OFF commanding. It basically consists of a 4 state (sync, 1, 0, blank) signal, pulse duration modulated (PDM), with constant bit ratio word coding and repetitive word formating. A digital decoder address is required.

A brief description of the format and code follows:

A series of five words, each consisting of eight bits, 1 synchronization (sync) and 1 blank period are sent per command. The series generally consists of a unique address word sent twice followed by an execute word sent three times. The reception of one correct address word and one valid execute word in the same series of 5 words is sufficient to effect a command. This redundancy increases the probability of receiving the correct command under weak signal and interference conditions.

The technique used for error detection and interference rejection consists of forming the code words from a fixed number of zeros and ones. The address code consists of a combination of two ones and six zeros, or of six ones and two zeros. The execute code always contains a combination of four ones and four zeros. This fixed 4-out-of-8 bit coding provides a means of detecting all odd and 43% of all two bit errors. To further lessen the possibility of spurious commanding, no address or execute word may be decoded unless a sync pulse is detected, and once the address has been detected, a valid execute word must be read within a fixed period.

Other characteristics of the system are:

a. Capacity: Seventy 8 bit execute codes.

Fifty-six 8 bit address codes.

b. Modulation: Pulse - duration coded, 25, 50, 75 and 100% PDM

Subcarrier (tone) - 100% AM

One of the eight GSFC standard tones in the band from 7000 to 11,025 cps must be used.

RF Carrier-AM, normally 75%, 148-150mc

PRECEDING PAGE BLANK NOT FILMED.

2.0 PURPOSE

The intent of this document is to provide assurance that equipment and systems complying with this standard will:

a. Have a high probability of successful command operation and

b. Be compatible with existing GSFC spacecraft command facilities of the Satellite Instrumentation Network. The Tone-Digital Command Console and other equipment are described in Appendices BI and BII.

3.0 SCOPE

This document applies to spacecraft requiring 70 or less ON-OFF commands where such commands are transmitted from stations within the GSFC Satellite Instrumentation Network. Spacecraft requiring only a few commands may use the Tone Command System.

This document also applies to all spacecraft that are under the management of the Goddard Space Flight Center and to all spacecraft using the GSFC Data Processing System. If an exception to this standard is required, it must be approved by the GSFC Data Requirements Systems Committee.[a]

4.0 SYSTEM STANDARD

4.1 Pulse Definition

A pulse period is defined as 72 cycles of the encoder clock frequency (72 T_c). The assigned subcarrier frequency (see Section 4.6.2) is normally used as the clock frequency. Both the clock and the subcarrier are then connected to the same oscillator and are generated synchronously. Facility for separate encoder and subcarrier oscillator operation is not presently contemplated.

---

[a]Address: GSFC Data Requirements Systems Committee, Goddard Space Flight Center, Greenbelt, Maryland, Code 560.

There are four pulse states as follows:

Blank: Off for 1 pulse period = 72 T_c

Sync: On for 3/4 pulse period = 54 T_c

One: On for 1/2 pulse period = 36 T_c

Zero: On for 1/4 pulse period = 18 T_c

4.2 Pulse Code

An eight-bit constant-ratio digital code in which numbers 0 to 15 are binary encoded is used. The address can be either a 6 (ones)-out-of-8 or 2-out-of-8 code. Selection of the code will usually depend on the relative probability of "one" and "zero" errors occurring for the particular equipment used.

The execute word is always encoded using the 4-out-of-8 ratio. This provides 70 coded words which differ from each other and from the address word in two or more bit positions. When less than 70 words are being used it is recommended that words that differ in the maximum number of bit positions be selected.

An example of the above binary coding with corresponding digital and teletype representation is given in Appendix BI.

4.3 Synchronization and Timing

A word sync pulse is inserted into each word transmitted. It will always follow a blank period (space) as shown in Figures B1 and B2.

The word sync pulse can be used in the spacecraft to signal the completion of a word transmission, initiate decoding and to reset for the next word. Bit sync can be derived from the leading edge of the demodulated pulse. It can also be derived from the subcarrier since the start and end of the tone is synchronous with the start and end of the pulse. The use of one or more of these techniques is recommended.

An 1/2 second delay precedes each command to allow initial transmitter warm up and to separate frames. In the spacecraft a timed execute gate is required for restricting the period during which a command function may be executed. The timer is activated upon the recognition of a correct address word and is normally preset for approximately four word periods (one frame period minus one address word period).

4.4 Word Structure

4.4.1 Address Word

The decoder address word is composed of an eight bit address code preceded by a word sync pulse and a blank period (space).

Addresses are assigned by the GSFC Frequency Manager, Code 531, Greenbelt, Maryland.

4.4.2 Execute Word

The execute word is composed of an eight bit execute code preceded by a sync pulse and a blank as shown in Figure B1.

4.5 Frame Format

In the manual mode (see Appendix BI)the command frame consists of an address word sent twice followed by an execute word sent three times. Other formats can be generated in the paper tape mode (see Appendix BI).

An additional space and sync pulse is required after the last word in the frame as shown in Figure B2. This results in a command frame duration of 52 pulse periods.

4.6 Modulation

Coded PDM/AM/AM transmission is used.

4.6.1 Pulse

Pulse width variations are normally less than $\pm 1/2\ T_c$. The leading edge of the pulse is synchronous with the bit rate clock.

4.6.2 Subcarrier

The subcarrier is 100% amplitude modulated by the coded pulses.

Spacecraft subcarrier frequencies are assigned by the GSFC Frequency Manager. One tone is assigned per spacecraft. GSFC standard tone nos. 23, 24, 25, and 26 (7000, 7700, 8182 and 8673 cps respectively) are presently available. At a future date tone nos. 27, 28, 29, and 30 in the band from 9193 to 11,024 cps will be assigned.

Subcarrier frequencies are held to a ±0.005% tolerance, with less than 5% harmonic distortion.

4.6.3 Carrier

Seventy-five percent amplitude modulation of the carrier is used.

RF carrier frequencies are assigned by the GSFC Frequency Manager and will be in the band from 148 to 150 Mc.

5.0 SYSTEM PERFORMANCE

The minimum performance required of tone-digital systems, unless otherwise specified and approved by the Data Requirements Systems Committee, is as follows.

5.1 Pulse Error Rate

The pulse error rate shall be less than 1 per 5000 bits for a subcarrier signal to noise ratio of 0 db. For test purposes, the noise is white (0 to 20 kc) gaussian in volts RMS and the subcarrier is in volts RMS measured at the input to the decoder bandpass filter.

5.2 Spurious Command Rate

5.2.1 Random Noise Environment

The receiver-decoder equipment shall be designed to squelch at a level above the expected peak system temperature noise level. No more than one random bit decision per minute shall be made at this peak noise level.

5.2.2 Marginal Signal Condition

Less than 1 per 5,000 commands shall be decoded erroneously as a spurious command when receiving a marginal signal (a pulse error rate of approximately 1 in 10). Test signal format is 2 address, 3 execute words.

5.2.3 Adjacent Subcarrier Channel

The spacecraft decoder shall reject the normal command signals in the adjacent subcarrier channels. Less than 10 pulses (20%) shall be picked up per adjacent channel command transmission.

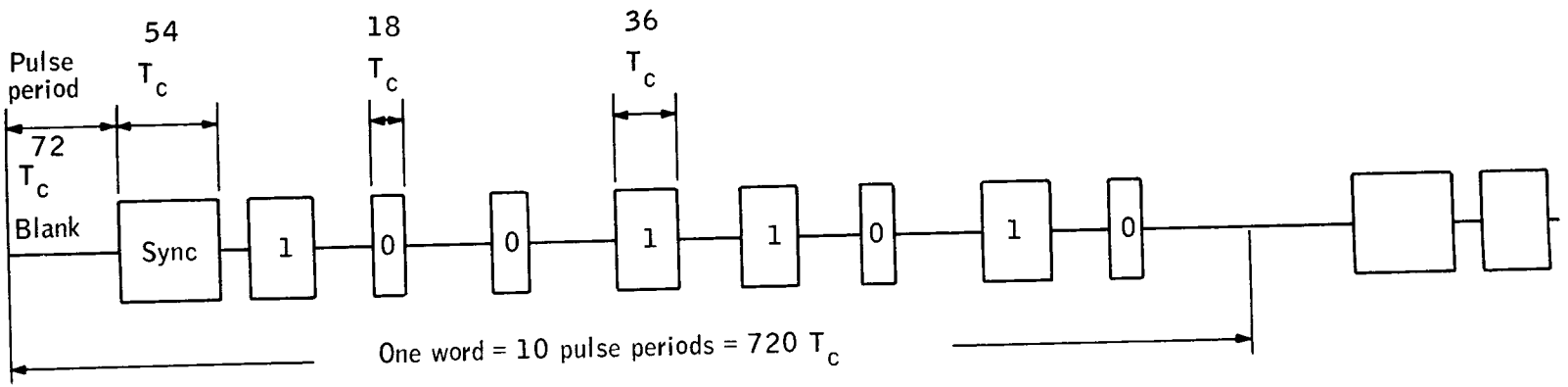

T_c = period of encoder clock

Figure B1. Command Word Structure

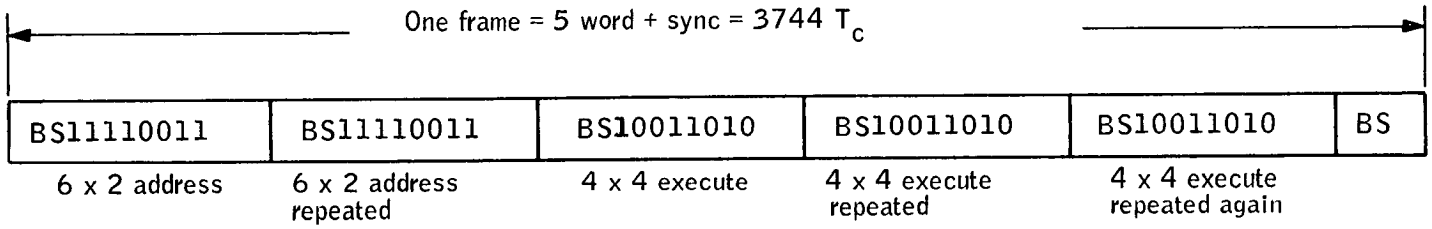

Figure B2. Command Frame Format

APPENDIX BI

SATELLITE INSTRUMENTATION NETWORK FACILITIES

1.0 INTRODUCTION

The Minitrack command console, transmitter and antenna is described below. For further information about equipment at the Minitrack stations and other SIN facilities see the "Satellite Instrumentation Network Facilities Report" NASA-GSFC No. X530-62-3.

2.0 COMMAND CONSOLE

The tone digital command console presently used has three modes of operation. They are as follows:

2.1 Manual Mode

From one to four commands with the same address may be manually set in the command console panel and transmitted with a single depression of the "GO" button.

2.1.1 Controls

The operator has the following controls to set:

2.1.1.1 Message Format Selector[a]

1 to 4 commands (as set in the digital execute selectors) will be transmitted according to selector setting.

2.1.1.2 Address Selector Switch

Two 16-position switches are used to enter the digital address. For instance, address #7 (say 1011, 0111) is entered by setting the first address switch to 11 and the second one to 7.

[a]Nomenclature not necessarily same as appears on console, for further details see: Minitrack Digital Command Encoder (S-B3339) Instruction Manual.

2.1.1.3 1st Execute Selector Switch

Two 16-position switches are available to enter one of the 70 execute codes. This execute code is always sent first. For instance, if "Turn On Experiment 1" is 1100, 0011, 12, and 3 are set in the switches and automatically transmitted 3 times preceded by the address transmitted twice for the first command.

2.1.1.4 2nd, 3rd, & 4th Execute Selector Switches

Same as above except they determine the 2nd, 3rd and 4th commands that are transmitted.

2.1.1.5 Transmitter Selector Switch

One of four transmitters inputs may be selected.

2.1.2 Display

2.1.2.1 Execute Code Indicators

The digital designation of the command function- the number set into the Execute Selector switches - is displayed on the command console control panel after depression of the "GO" button. This enables the operator to verify what command was transmitted. The internal binary to sexadecimal (0 to 15) conversion is done prior to PDM conversion.

2.1.2.2 Address Code Indicators

Current assigned addresses are given 1 to 10 designations by the GSFC Frequency Manager. This designation rather than the digital number set into the Address Selector switch is displayed.

2.1.2.3 Even Count - NO GO Indicator

An even bit check of the binary code is made prior to PDM conversion. The indicator lights whenever the even count check fails. Only the execute code even check failure will stop the transmission.

2.1.3 Encoding and Transmission Checks

2.1.3.1 Even Count

An even bit check is made on all words transmitted as mentioned above in Section 2.1.2.3. Transmission is controlled only for the execute word in the Manual Mode.

2.1.3.2 Verification

The generated binary codes are decoded and displayed to the operator as described above in Section 2.1.2.1 and 2.1.2.2.

2.1.3.3 Subcarrier Presence

A VU meter mounted on the console front panel is used to monitor the console output.

2.1.3.4 Transmitter Select

An indicator lights if the transmitter select switch has not been set.

2.2 Tape Mode

A tape mode is provided for entering command messages from teletype (Baudot 5 hole) paper tape. The message is encoded exactly as it appears on tape except for the space and sync pulse which is automatically inserted into each word during the encoding process. Frame delays (separation) and stops must be programmed on the tape.

2.2.1 Tape Preparation

Paper tapes are prepared on teletype or other paper punch machines with a Baudot Code keyboard. A code table similar to the sample shown below is required for each mission.

Function	Binary Code	Teletype Baudot Equivalent	Digital Equivalent
Decoder #1 address	0000, 1001	T, B	0, 9
Decoder #2 address	1110, 1101	V, X	14, 13
Command #1	0000, 1111	T, Letters	0, 15
Command #2	0001, 0111	Z, Q	1, 7
Command #3	0001, 1011	Z, Figures	1, 11
Command #4	0001, 1101	Z, X	1, 13
etc.			
Frame Space	11110	K	-
STOP	11110, 11110	K K	-

For example if Command #4 is to be transmitted to decoder #2, binary code 1110 1101 would be punched into the tape first by striking keys V and X. The address can be repeated as many times as desired (keeping in mind the spacecraft timer) by repeating these letters on the tape. The command execute code, 0001 1101, is then punched using keys Z and X and repeating as many times as desired.

A sample of a tape with one address code, one execute code and the stop code is shown in Figure BI-1. Note that the Baudot equivalent code is the binary code plus a punch in channel five. The channel 5 punch designates the tone - digital code to the Command Console.

2.2.2 Tape Transmission

Messages are entered via a Tally paper tape reader (Model #424) mounted on the front of the Command Console. With the console set to the paper tape mode, transmission is initiated by depressing the "GO" button. The tape does not stop until it senses a stop code. Even count check failures are ignored.

2.3 Check Mode

Equipment checks and servicing can be run by setting the Transmitter Selector off and the Operate switch to Step (manual). The console can then be stepped bit by bit by operating a pushbutton.

3.0 TRANSMITTER

The Minitrack Network Stations are presently using a 200 watt, AM transmitter (Collins 242G-2).

4.0 ANTENNA

The Minitrack stations use a 7-element crossed dipole Yagi Antenna for commanding. Some of its characteristics are:

Gain	:	13 db approx.
Polarization	:	Right circular (left circular and linear available)
Power Input	:	2000 watts approx.
SCAN, Azimuth	:	360° 1 RPM
SCAN, Elevation	:	180° 1 RPM

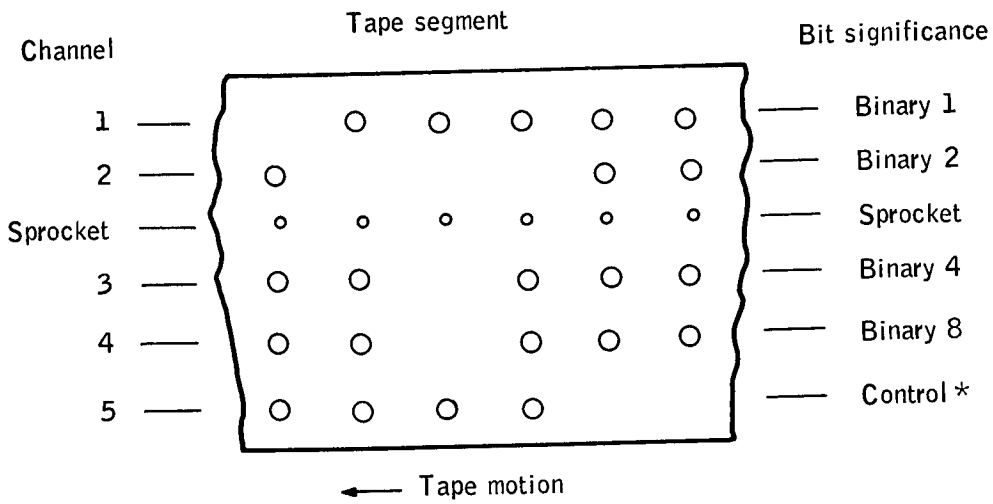

Console code	14	13	01	13	Stop
Baudot code	V	X	Z	X	KK

* Control punch is not part of spacecraft code.

Figure B1-1. Paper Tape Format for Minitrack Tone-Digital Command Console

APPENDIX BII

TYPICAL TONE DIGITAL SPACECRAFT EQUIPMENT

1.0 RF Subsystem

1.1 Antenna

The command antenna is commonly four whips (monopoles) in a flared turnstile configuration. This provides an approximately isotropic response for a spin stabilized spacecraft. However spacecraft orientation can cause antenna signal nulls up to -20db due to cross polarization.

The same antenna is also generally used for telemetry transmission. Isolation matching means such as hybrid rings and coaxial line diplexers are then required.

1.2 Receiver

Some typical specifications for a command receiver required for a particular mission are:

Frequency	:	As assigned (148-150 mc)
Noise Figure	:	10db at stand. ref. temp. 290°K
Local Osc. Stability	:	±2000 cps.
IF BW	:	36 kc at 6 db point
Sensitivity	:	2μ volts (75% modulation, 50 ohms, 85% max output)
Audio BW	:	10 kc
Audio Output	:	50 mw
Power	:	220 milliwatts
Weight	:	1.5 pounds

A redundant parallel receiver can be used to improve reliability.

2.0 Decoder

Specifications for a typical command decoder are:

Subcarrier Bandpass	:	±6.0% at -6db
Detection	:	Integration - threshold
Word Sync	:	Separate integrator for word sync pulse
Bit Sync	:	Derived from leading edge of each pulse
Shift Register	:	Dual "1" & "0" magnetic core registers. Word sync reset
Decoding	:	X-Y magnetic core matrix
Address Interlock & Timer	:	Separate powered address matrix winding. Power switched for a timed period to the execute matrix
Output	:	SCR relay driver. Provisions for combining with a redundant decoder
Checking	:	Rejection of invalid codes
Power	:	Standby - 0.2W Operate - 2.0W
Weight	:	2 lbs.

3.0 Command Control

Provision for information or decision feedback is strongly recommended.

APPENDIX C

PULSE CODE MODULATION TELEMETRY STANDARD

January 27, 1966

APPENDIX C

PULSE CODE MODULATION TELEMETRY STANDARD
(Ref. 24)

January 27, 1966

1.0 PURPOSE

The primary purpose of these standards is to require the use of techniques that will enable reliable acquisition and reduction of data from spacecraft employing PCM telemeters. The standards are intended to reflect current state-of-the-art and will be revised as new developments dictate.

2.0 SCOPE

This document applies to all spacecraft using PCM telemetry systems that are under the management of the Goddard Space Flight Center and/or using the GSFC Space Tracking and Data Acquisition Network and/or the GSFC Data Processing System. If an exception to this Standard is desired, it must be approved by the GSFC Data Systems Requirements Committee. [a]

3.0 STANDARDS

Since practical considerations often dictate a departure from optimum techniques, some categories will have two approaches; a "PREFERRED" classification which will yield near optimum results and an "ALTERNATE" classification which can be used to provide acceptable results when other considerations influence the design.

3.1 Code Format

A serial binary code shall be used. The following types of coding are acceptable. (Refer to figure C-1 "PCM Waveforms").

NRZ Type C
NRZ Type M
Split Phase

---

[a] Address: The Director, Goddard Space Flight Center, Greenbelt, Maryland
Attention: Chairman, GSFC Data Systems Requirements Committee, Code 520.

Waveform symmetry shall be maintained within 2 percent of the nominal bit period as measured at the telemetry receiver output.

3.2 Bit Rate

3.2.1 Range -- The permissible range of data rates is from 1 bit/sec to 200,000 bits/sec.

3.2.2 Stability

Long Term (one year) -- less than ±5 percent of bit rate.
Short Term (5 minutes) -- less than ±1/2 percent of bit rate.
Instantaneous (e.g., flutter of spacecraft tape recorder) -- less than 3 percent of bit rate (peak-to-peak) measured in a bandwidth wide enough to include all significant components, (nominally 600 cps).

NOTE: Compatibility must exist between these requirements and those listed in Section 3.4.1.

3.2.3 Changes in bit rates during real time transmission are permissible only by command from a ground station. Identification of the bit rate in use must be included as part of the telemetered data.

3.3 Format

3.3.1 Minor Frame Length -- The minor frame length shall not exceed 8192 bits and shall be of constant length for any one mission.

3.3.2 Major Frame Length -- The major frame shall not consist of more than 256 minor frames.

3.3.3 Word Structure

3.3.3.1 Word synchronization may consist of 0, 1, 2, or 3 bits per word and shall be the first bit or bits within the word when used.

3.3.3.2 Data words may be composed of any number of syllables; however, the structure of any particular word shall remain constant. In those cases where the syllable represents a single measurand, the most significant bit shall occur first.

3.3.3.3 Parity shall be optional. If used, it shall be the last bit in a syllable or a word. Error correction and other redundant coding techniques may be used to enhance detection efficiency.

3.3.3.4 Reversal in the sequence of transmission is permissible if a spacecraft tape recorder is readout during rewind.

3.3.4 Word Length -- The word length shall not exceed 32 bits and all words shall be of constant length for any particular mission. This does not preclude different word structures as defined in Section 3.3.3.

3.3.5 Supermultiplexing and Submultiplexing -- Data multiplexing at sampling rates which are multiples or submultiples of the minor frame rate is permissible. Where two or more submultiplexers are used, they must be synchronized together and have either an equal number of channels or binary multiples in order to use a common synchronization word. The submultiplexer cycle shall be complete within 256 minor frames as specified in Section 3.3.2.

3.3.6 Variable Formats -- Variations in data channel assignments are permissible, however, when variable formats are used each frame must contain positive identification of the format. The frame and word length must remain constant as well as the synchronization pattern except as allowed by Section 3.4.3.2.

3.4 Synchronization

3.4.1 Bit Synchronization -- Bit synchronization is the first step in acquiring system synchronization and sufficient changes of state must be provided for rapid, reliable synchronization. All operating conditions shall be considered, such as primary power being turned off to many of the experiments which could result in data without transitions. Where similar conditions could exist, techniques such as restricting the dynamic range of the data, odd parity or word synchronization should be used to insure bit transition. The maximum number of data bits between transitions must not exceed 64.

NOTE: Compatibility must exist between these requirements and those in Section 3.2.2. Each spacecraft/ground system must take into account worst case combinations of bit rate stability and bit transition density.

3.4.2 Frame Synchronization

3.4.2.1 The "PREFERRED" method of frame synchronization is to use a pseudo-random code pattern of appropriate length that is repeated every frame. With this technique, it is not necessary to devote one or more bits in each word to synchronization purposes. A comprehensive study of code patterns has been completed and Table CI-1 contains codes which are recommended for use. In selecting the pattern length, the telemetry design engineer

should carefully consider the probability of the pattern being generated in the data.

3.4.2.2 An "ALTERNATE" method of synchronization is to use one or more bits at the start of each word to establish bit phasing and one word per frame with a unique code that cannot occur in the data.

3.4.3 Submultiplexer Synchronization

3.4.3.1 A syllable in each minor frame shall be used to identify the sub-channel number for that frame (e.g., 7 bits for 128 channel submultiplexer). This syllable must occur prior to the first submultiplexed channel.

3.4.3.2 As an "ALTERNATE," the main frame sync pattern may be complemented once per longest submultiplexer frame. The two methods may be used together if desired and the complement of the frame pattern may be used to prevent the ground station from remaining locked to a false frame sync pattern.

3.5 System Design -- Shall be governed by this Standard, the RF and Modulation Standards, current ground station equipment capability and spacecraft requirements.

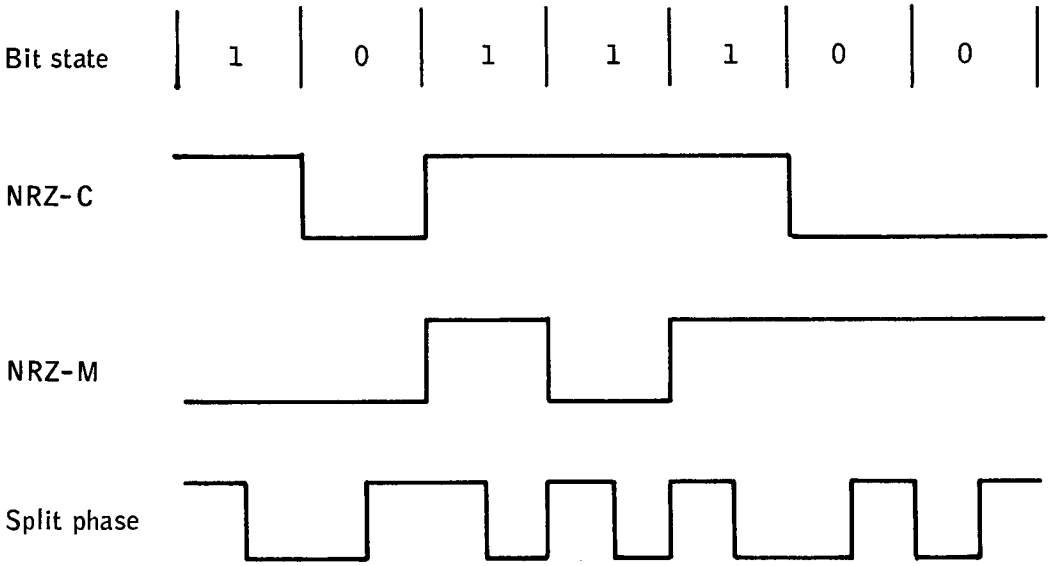

Figure C1. PCM Waveforms

APPENDIX CI

PCM FRAME SYNCHRONIZATION CODES

The codes listed in Table CI-1 have been determined as optimum frame synchronization codes for general use in PCM telemetry.

The technique used in the determination of these codes was essentially that of examining all 2^n binary patterns of a given length, n, for that pattern with the smallest total probability of false sync recognition over the entire overlap portion of the ground station frame synchronization process.

A more detailed account of this investigation will be found in the Proceedings of the National Telemetering Conference, June 1964: "Development of Optimum Frame Synchronization Codes for Goddard Space Flight Center PCM Telemetry Standards", by Jesse L. Maury, Jr. and Frederick J. Styles.

TABLE CI-1. - OPTIMUM FRAME SYNCHRONIZATION CODES FOR GENERAL USE IN PCM TELEMETRY

CODE LENGTH										
7	101	100	0							
8	101	110	00							
9	101	110	000							
10	110	111	000	0						
11	101	101	110	00						
12	110	101	100	000						
13	111	010	110	000	0					
14	111	001	101	000	00					
15	111	011	001	010	000					
16	111	010	111	001	000	0				
17	111	100	110	101	000	00				
18	111	100	110	101	000	000				
19	111	110	011	001	010	000	0			
20	111	011	011	110	001	000	00			
21	111	011	101	001	011	000	000			
22	111	100	110	110	101	000	000	0		
23	111	101	011	100	110	100	000	00		
24	111	110	101	111	001	100	100	000		
25	111	110	010	110	111	000	100	000	0	
26	111	110	100	110	101	100	010	000	00	
27	111	110	101	101	001	100	110	000	000	
28	111	101	011	110	010	110	011	000	000	0
29	111	101	011	110	011	001	101	000	000	00
30	111	110	101	111	001	100	110	100	000	000

PRECEDING PAGE BLANK NOT FILMED.

PRECEDING PAGE BLANK NOT FILMED.

APPENDIX D
GODDARD RANGE AND RANGE RATE SYSTEM

PRECEDING PAGE BLANK NOT FILMED.

PRECEDING PAGE BLANK NOT FILMED.

PRECEDING PAGE BLANK NOT FILMED.

APPENDIX D

GODDARD RANGE AND RANGE RATE SYSTEM
(Reference 25)

S-Band Transponder Specifications

1.0 INTRODUCTION

1.1 PURPOSE. The purpose of this specification is to describe an S-Band transponder which will be used with the Goddard Range and Range Rate Tracking System to obtain precise tracking data for determination of spacecraft orbits.

1.2 GENERAL. The transponder required under this specification is intended for spacecraft use. All design criteria must meet space-flight specifications.

The contractor will utilize solid state circuit technology and be responsible for all circuit design.

Consideration shall be given during all phases of design, in order to ensure future growth capabilities for an integrated command, telemetry, and tracking system.

The contractor shall be responsible for demonstrating that all specifications have been met.

2.0 APPLICABLE DOCUMENT

The following documents of the issues in effect on date of invitation for bids are applicable as required within this document unless specifically indicated as a guide.

2.1 SPECIFICATIONS

2.2 STANDARDS

2.3 DRAWINGS

2.4 PUBLICATIONS

Note:

Sections 2.1, 2.2, 2.3, and 2.4 would be added to describe a specific spacecraft requirement.

PRECEDING PAGE BLANK NOT FILMED.

3.0 REQUIREMENTS

The S-Band transponder shall be capable of receiving signals transmitted from three ground stations, either individually or simultaneously. It shall frequency-translate these signals together with their modulation and retransmit them. The translation shall be performed in such a manner that coherent two-way Doppler measurements may be obtained individually and separately by each ground station. The transponder shall use all solid-state components and have an expected operational lifetime of at least one year.

The signal environment and the capabilities required of the transponder have been derived in detail and the following tabular summary is a condensation of the factors which shall enter directly into the detailed design of the transponder.

Input Signal Level.....	-40 dbm to -110 dbm
Input Frequencies.....	1799.2 MHz (channel 3) 1800.0 MHz (channel 2) 1801.0 MHz (channel 1) 1800.0 MHz (wideband channel)
I F Frequencies.....	38.95 MHz (channel 3) 39.95 MHz (channel 2) 40.75 MHz (channel 1) 39.95 MHz (wideband channel)
Channel Frequencies.....	1.4 MHz (channel 1) 2.4 MHz (channel 2) 3.2 MHz (channel 3) 2.4 MHz (wideband channel)
Channel Power Difference...	0 to 32 db (any channel high)
Multiplication Ratio..... (transmit/receive)	60/48
Channel Information Bandwidth (1 db).....	400 KHz (narrowband channel) 800 KHz to 3.4 MHz (wideband channel)

Channel Noise Bandwidth....	500 KHz (narrowband channel) 3.9 MHz (wideband channel)
One-Way Doppler Shift.....	±85 KHz
Transmitted Carrier Frequency.....	2253 MHz
Transmitted Power.....	1 watt nominal*
Transmitter Bandwidth (1 db).....	8 MHz min.
Transponder Delay.....	3,800 nsec Max. (narrowband channel) 270 nsec Max. (wideband channel)
Transponder Group Delay...	Remains constant to within ±50 nanoseconds (±20 nanoseconds wide-band channel) from 0° to 50°C, over the doppler and the signal level ranges and over any time interval
Noise Figure.....	7 db maximum (measured at Diplexer Antenna Port)

*Note: Transmitter Power shall be tailored to a specific Spacecraft Mission. Minimum GRARR requirements are:

Range KM	Power (Watts)
Minimum	1/4
50,000	1/2
100,000	3/4
150,000	1
200,000	2
500,000	10

Sensitivity	-110 dbm (narrow-band channels) (-107 dbm maximum) -103 dbm maximum (wideband channel)
Input VSWR	1.5:1 maximum
DC Power In	20 watts maximum at 1 watt output
Operational Lifetime	1 year minimum
Weight	6.5 lbs. maximum (two narrow-band channels)
Volume-Displacement	150 in.^{3} maximum (two narrow-band channels)

Figure D1 shows the frequency relationships that shall exist within the transponder. Figure D2 is the overall block diagram of the S-Band transponder. It should be noted here that this breakdown is intended merely as a guide and does not have to be strictly adhered to.

The incoming signal is heterodyned down to the intermediate frequencies by mixing with a multiple of locally generated reference signal. The first mixer local oscillator frequency is nominally 1840 MHz and lies on the high side of the received signal frequency.

The resultant signal is amplified in the 40 MHz intermediate frequency amplifier and is then mixed down to the modulation frequencies of 1.4, 2.4, and 3.2 MHz. The second mixer uses the same reference source as the first mixer local oscillator signal. The L. O. injection to the second mixer is, however, on the low side of the signal frequency. The modulation frequency can be described as:

$$49\, f_o - f_r - f_o = f_{modulation}$$

or

$$48\, f_o - f_r = f_m$$

where f_o = offset oscillator frequency

f_r = received signal frequency

The modulation signals are then separated by their frequency assignments in channel filters, amplified, passed through squelch gates, and applied as phase modulation to the transmitter carrier.

The carrier frequency of the transmitted signal is again derived from the offset oscillator, which is common to both the receiving and transmitting portions of the transponder, by multiplication times 60.

It should be noted at this point that this method of mechanization offers the capability of full coherent (i.e., phase-lock) operation for future long range missions requiring single channel operation. The phase-lock version of the transponder would require only that the received signal frequency result in a first intermediate frequency which is equal to the offset oscillator frequency. The two signals would then be compared in a phase detector and the resultant phase error used to correct the frequency of the offset oscillator.

The multiplication sequences represent the result of a series of trade-offs between efficiency, spurious harmonic rejection, bandwidth conservation, and stability consideration.

4.0 MAJOR SUBSYSTEMS

There are six major subsystems of the S-Band transponder: (1) Microwave, (2) Receiver, (3) Oscillator, (4) Modulator, (5) Transmitter and (6) Power Converter.

4.1 MICROWAVE SUBSYSTEM. The microwave subsystem consists of the diplexer, balanced microwave mixer, first local oscillator frequency multiplier, and transmitter harmonic generator.

4.1.1 Diplexer. The diplexer provides the means for simultaneous reception and transmission of two microwave signals through a common coaxial connector.

The diplexer shall have mounted on it, in an easily accessible fashion, the antenna port, which shall be a type TNC connector.

4.1.2 Balanced Mixer. The balanced mixer mixes the S-Band received frequency with the local oscillator frequency, converting the S-Band received signal to the I F frequency.

4.1.3 First Local Oscillator Frequency Multiplier. The first L.O. generator shall multiply the crystal oscillator frequency by 49 to provide the first L.O. mixing frequency of 1839.95 MHz.

4.1.4 Transmitter Harmonic Generator. The transmitter harmonic generator accepts the signal from the power amplifier and multiplies it to 2253 MHz at the required power output. This 2253 MHz signal is then coupled to the diplexer.

4.1.5 Specifications for Microwave Subsystem

Diplexer:

VSWR at transmit frequency...	1.2:1 maximum
VSWR at receive frequency....	1.2:1 maximum
Insertion loss at transmit frequency.....	0.5 db maximum
Insertion loss at receive frequency.....	0.5 db maximum
Isolation of transmit frequency at receive frequency.....	80 db minimum
Isolation of receive frequency at transmit frequency....	80 db minimum

Balanced Mixer:

Input frequencies.....	1799.2 MHz 1800.0 MHz 1801.0 MHz
L.O. input frequency.....	1839.95 MHz
Output frequencies.....	40.75 MHz 39.95 MHz 38.95 MHz
Higher order products.....	45 db minimum below first order products, at I.F. Amplifier Input

L.O. Frequency Multiplier:

Input frequency.....	37.55 MHz
Output frequency.....	1839.95 MHz
Spurious output.....	-60 db from carrier
3 db output bandwidth.....	20 MHz

Transmitter Harmonic Generator:

Output frequency.....	2253.0 MHz
Output power.....	1 watt nominal
Spurious outputs.....	-60 db minimum
Output modulation 1 db bandwidth.....	10.5 MHz

4.2 RECEIVER SUBSYSTEM. The receiver subsystem consists of the I F amplifier, I F mixer, channel filter, channel amplifier, channel squelch gate and AGC detector.

4.2.1 I F Amplifier. The I F amplifier amplifies the signal received from the balance mixer. The I F amplifier output shall be limited to a level that will not overdrive the IF mixer. Design consideration shall be given so that an AGC circuit can be incorporated at a later date to control the I F amplifier gain.

4.2.2 I F Mixer. The IF mixer heterodynes the I F signal to the modulation frequencies of 1.4, 2.4, or 3.2 MHz by mixing with the 37.55 MHz crystal oscillator signal.

The I F mixer shall be designed to reduce higher order mixer products as low as possible with a design objective of keeping from 50 db (minimum of 45 db) below the first order mixer products.

4.2.3 Channel Filter. The channel filter limits the transponder noise bandwidth to 550 KHz for each narrowband channel and to 3.9 MHz for the wideband channel. The basic design philosophy which shall be adopted for the transponder is to design all circuits except the channel filter with as wide a bandwidth as practical. In this way major phase delay occurs only in the filter. In order to reduce the phase delay to a minimum, a design shall be chosen which results in an essentially linear phase slope over a ±200 KHz bandwidth for each narrowband channel and ±600 KHz bandwidth for the wideband channel. These bandwidths account for the 100 KHz to 500 KHz modulation plus 100 KHz maximum expected doppler shift and L. O. uncertainity.

4.2.4 Channel Amplifier. The output of each filter is applied to its respective channel amplifier. Each amplifier shall be identical, both electrically and mechanically, and thus fully interchangeable. The output of each amplifier shall be hard limited to provide a constant level modulation input under all input signal conditions.

4.2.5 Channel Squelch Gate. The squelch circuitry functions to prevent transmission of noise when a channel signal is not present. Also, if no signal is present in any channel, the transmitter is disabled to reduce nonoperating power consumption from the spacecraft. This circuit shall actuate with a S/N ratio in the channel bandwidths of -6 db or an input signal level of -110 dbm.

4.2.6 AGC Detector. Provision shall be made for an AGC Detector to be included at the output of the I F amplifier for use at a later date. For the present, a limiter in the I F amplifier will be sufficient. The AGC circuit or limiter prevents the I F mixer from being overdriven by limiting the output of the I F amplifier.

4.2.7 Specifications for Receiver Subsystem

I F Amplifier:	
Bandwidth (1 db).....	40 MHz
Noise Figure.....	2.5 db maximum
I F Mixer:	
Input frequency.....	40.75 MHz 39.95 MHz 38.95 MHz
L.O. frequency.....	37.55 MHz
Noise Figure.....	7.5 db maximum
VSWR.....	1.5:1 maximum
Output frequency.....	3.2 MHz 2.4 MHz 1.4 MHz
Channel Filter:	
Information Bandwidth (1 db)...	400 KHz (narrow-band channels) 800 KHz to 3.4 MHz (narrow-band channels)

Channel Filter: (Cont'd)

Noise bandwidth.....	550 KHz (narrow-band channels) 3.9 MHz (wideband channel)
Center frequency.....	1.4 MHz (channel 1) 2.4 MHz (channel 2) 3.2 MHz (channel 3) 2.4 MHz (wideband channel)
Adjacent channel separation.....	60 db minimum
Passband ripple.....	0.1 db maximum
Linear phase slope bandwidth.....	400 KHz (narrow-band channels) 1.2 MHz (wideband channel)

Channel Squelch Gates:

Squelch actuation level.....	-110 dbm at diplexer input (-107 dbm maximum)

4.3 OSCILLATOR SUBSYSTEM. The oscillator subsystem consists of a crystal oscillator and a frequency multiplier.

4.3.1 Crystal Oscillator. The crystal oscillator provides the 37.55 MHz reference frequency for the transponder. Since the transponder operates "open loop", the stability requirements on the crystal oscillator frequency are rather stringent. This is especially true of the short term stability as determined in observation intervals which are comparable in duration to signal transit times through the transponder. The requirements of this oscillator are ±5 ppm stability from 0° to + 50°C, and a noise contribution, due to short term effects, totaling less than 2 degrees rms error in a 20 Hz ($2B_L$) noise bandwidth at 1800 MHz.

4.3.2 Frequency Multiplier. The frequency multiplier takes the crystal oscillator frequency and multiplies it to provide the modulator carrier frequency.

4.3.3 Specifications for Oscillator Subsystem

Crystal Oscillator:

Center frequency	37.550000 MHz ± 550 Hz
Stability	± 5 ppm from 0° to +50° C
Noise contribution	2° rms maximum

4.4 MODULATOR SUBSYSTEM. The modulator subsystem consists of the phase modulator and a frequency multiplier.

4.4.1 Phase Modulator. The phase modulator modulates the carrier received from the oscillator subsystem frequency multiplier with the 1.4, 2.4 and/or 3.2 MHz signal from the channel squelch gates. A deviation of 1.5 radians is required to satisfy system requirements when one channel is operating, 0.75 radians for two channels operating simultaneously, and 0.5 radians for three channel operation.

It is important that the phase delay through the modulator be held to a minimum. To meet the delay requirements, the modulation nonlinearities should be kept below one percent, with as wide a bandwidth as possible.

The universal method of minimizing the effect of nonlinearities in the actual modulation process is to apply the modulation at a low index where linear transfer can be obtained readily, and then to translate to the desired carrier frequency utilizing frequency multiplication which, in turn, increases the index.

An auxiliary input to the phase modulator shall be provided for telemetry usage as required.

4.4.2 Frequency Multiplier. The frequency multiplier receives the output of the phase modulator and multiplies it to the frequency to be amplified in the power amplifier. The product of the multiplication factors of this multiplier, the oscillator subsystem multiplier and the transmitter harmonic generator must be 60.

4.4.3 Specifications for Modulator Subsystem

Phase Modulator:

Modulation index	1.5, + 0.0, -0.1 radian (one channel)
	0.75, + 0.0, -0.1 radian (two channel)
	0.5, + 0.0, -0.1 radian (three channel)
Modulation nonlinearities	1 percent maximum
Modulation frequency . .	3.2, 2.4 and/or 1.4 MHz
Sideband asymmetry . .	1 db maximum

Frequency Multiplier:

Spurious output	-60 db maximum

4.5 TRANSMITTER SUBSYSTEM. The transmitter subsystem consists of the power amplifier.

4.5.1 Power Amplifier. The power amplifier accepts the signal from the modulator subsystem frequency multiplier and amplifies it to as high a level as required to drive the transmitter harmonic generator to an output of 1 watt. Since low input power consumption is of primary importance in the transponder, active amplification shall be used at as high a frequency as the present state-of-the-art will reasonably allow.

The power amplifier shall be designed to produce the following results:

1. required output
2. maximum efficiency
3. maximum power gain
4. low intermodulation distortion
5. good circuit stability margins

4.5.2 Specifications for Power Amplifier

Bandwidth (1 db) . . . . . 20 MHz

4.6 POWER CONVERTER. The power converter subsystem serves three basic functions:

1. It converts the spacecraft main supply voltage to a number of voltage levels which are optimum for the various transponder circuits;

2. It reduces the supply voltage variations to levels low enough to be tolerated by transponder circuits;

3. It controls the amount of interference (generated either in the converter or in the rest of the transponder) to levels consistent with operation of the overall system.

The design must meet a number of special requirements. These are:

1. The power converter must operate in synchronism with an externally supplied 2.46 KHz signal;

2. Both synchronizing signal inputs are floating and cannot be gounded;

3. In case the synchronizing signal is not received, the power converter must continue operating close to the synchronous frequency;

4. The power converter must operate with high efficiency under full load (transmit mode) or light load (standby mode);

5. The power converter must be capable of operating with a supply voltage up to 42 VDC for a minimum of 10 minutes;

6. The supply voltage must be isolated from the transponder circuitry (single point ground).

4.6.1 Major specifications of the power converter subsystem are:

DC Input	23.5 to 33.5 VDC 42 VDC for 10 minutes
Standby Power Consumption	4 watts maximum
Operating Power Consumption	20 watts maximum at 1 watt output
Synchronizing Frequency	2461 Hz
Supply line ripple	20 mv rms maximum

5.0 MECHANICAL SPECIFICATIONS

5.1.1 Constitution. The transponder shall be of modular construction to facilitate repair or replacement of components.

5.1.2 Weight. The total weight of a two channel transponder shall not exceed 6.5 pounds.

5.2 MATERIALS. Materials shall be chosen to conform to the spacecraft specifications. Special consideration shall be given to avoid magnetic materials wherever possible. This is especially true of nuts, bolts, washers, etc., used to assemble the transponder.

5.3 FINISH. All modules shall be gold plated.

5.4 TEST POINTS. The following test points shall be easily accessible on the transponder:

Test Point	Method of Accessibility
1. Oscillator	Microdot connector; female
2. Modulation	Microdot connector; female
3. Crystal Current	Pin No. 9 of Amphenol Type 17-11150, or equivalent
4. Supply 1 (Power Converter)	Pin No. 5 of Amphenol Type 17-11150, or equivalent
5. Supply 2 (Power Converter)	Pin No. 3 of Amphenol Type 17-11150, or equivalent

Test Point	Method of Accessibility
6. Supply 3 (Power Converter)	Pin No. 1 of Amphenol Type 17-11150, or equivalent
7. Ground	Pin No. 7 of Amphenol Type 17-11150, or equivalent

Items 3 to 7 shall constitute the "Test Connector", which will, in addition, include a transmitter control on pin No. 15.

5.5 POWER CONNECTOR. The power connector shall be mounted in an accessible position on the transponder. It shall be an Amphenol plug (male) type 17-21090, or equivalent, with the following pin complement:

Pin No.	Function
2	+28 vdc
3	ground
4	sync
7	28 vdc return
8	sync return

6.0 ENVIRONMENTAL AND INTERFACE SPECIFICATIONS

This transponder shall be designed and built to meet the requirements of the OGO spacecraft. The latest OGO specifications shall be considered to constitute a part of this specification.

6.1 ENVIRONMENT TEST. The contractor shall demonstrate that all environmental specifications except the magnetic specification have been met. The magnetic properties will be measured at Goddard Space Flight Center.

7.0 ACCEPTANCE TEST

The contractor shall be responsible for demonstrating that each transponder manufactured meets all the specifications included in this document. Final acceptance of a completely assembled transponder shall be made pending satisfactory completion, by the contractor, of acceptance tests as defined in GSFC Document, GRARR S-Band Transponder Qualification Test.

8.0 DOCUMENTATION

8.1 DESIGN EVALUATION REPORT. The contractor shall prepare a design evaluation report covering the proposed design. This report shall clearly show how the design specifications will be met.

8.2 FINAL REPORT. The contractor shall prepare a final report which will update the design evaluation report to include any changes as a result of fabrication and testing. This report shall contain descriptive material and circuit diagrams necessary for understanding the operation of the transponder. It need not be a detailed instruction manual, but geared to the needs of a high level engineer. The contractor shall also furnish copies of all final test results.

8.3 REPORT FORMAT. These documents shall be in accordance with a Type III report under TIDS-100.

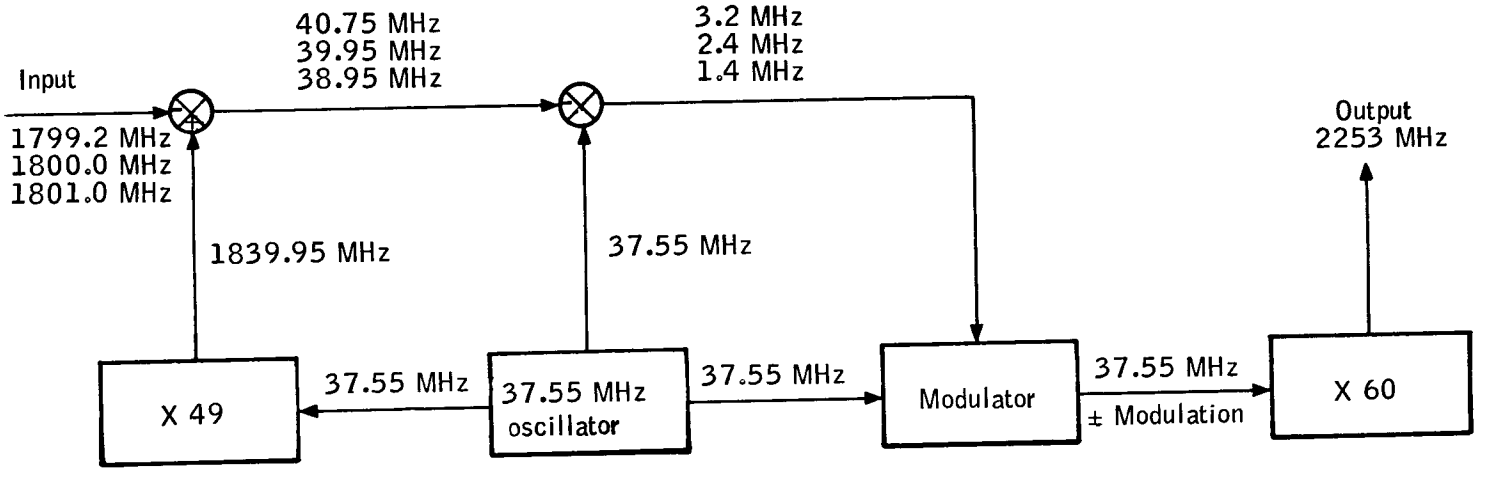

Figure D1. Frequency Relationships GRARR S-Band Transponder

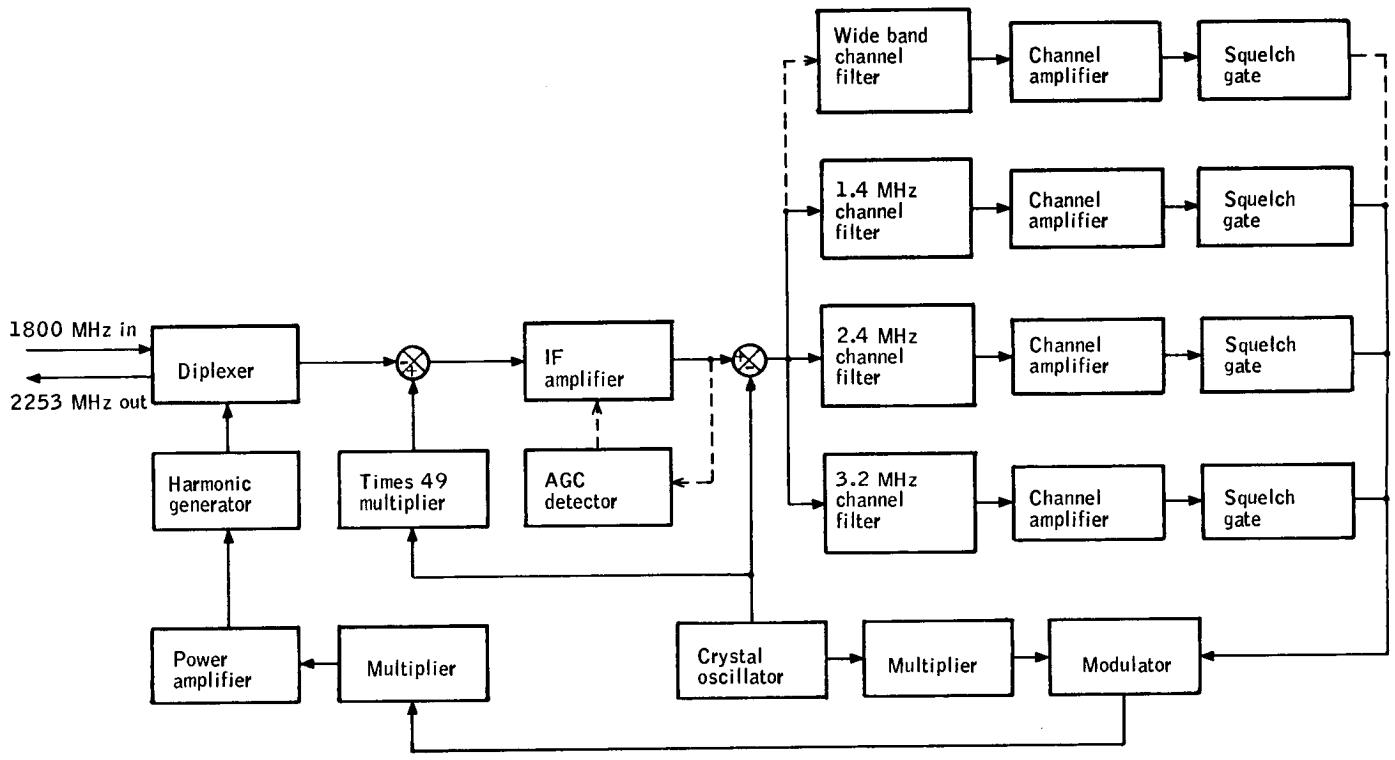

Figure D2. Block Diagram, GRARR S-Band Transponder

APPENDIX E
RELIABILITY ESTIMATES

APPENDIX E

RELIABILITY ESTIMATES

The following discussion is presented in two parts. The first considers only the functional components of the communication subsystem with no consideration given to the functional redundancy built into the subsystem. The second section considers the functional redundancy and recommends the application of redundancy in the ranging transponder only.

SIMPLE SERIES ANALYSIS

The functional blocks of the communication subsystem were considered, and a simple serial analysis was completed which considers any component failure a complete functional failure.

This estimate includes the use of high reliability parts procurement employing 100 percent screening for known weaknesses, approved derating policies, and approved fabrication techniques. The predicted reliability for the total communications subsystem is 0.743 as indicated in Table E1. This table presents the predicted reliability for various parts of the communications subsystem and the reliability for the total subsystem. The reliability estimate is based on the indicated operating hours presented in the table and on the failure rates specified by Langley Research Center during Phase A, Part I.

FUNCTIONAL ANALYSIS

This section considers the alternate modes of operation and demonstrates the reliability gains due to functional interchangeability within the subsystem. Minor changes are incorporated in this document from the series analysis shown previously to account for the continued evolution of the conceptual design.

Table E2 presents the predicted reliability for various parts of the communications subsystem and the reliability for the total subsystem without considering the alternate modes of operation or any redundancy.

Table E3 presents the alternate modes of operation in the event of a failure of one of the major items. From Table E3, it can be seen that as long as the S-band range and range-rate system is operating and either the TM transmitter or the 136 MHz beacon is operating, then the communications subsystem could still perform its function. The subsystem reliability can, therefore, be expressed as follows:

$$R_S = R_1 \ (1 - Q_2 \ Q_3)$$

where

R_s = communications subsystem reliability

R_1 = S-band range and range-rate system reliability

Q_2 = TM transmitter unreliability

Q_3 = 136 MHz beacon unreliability

therefore,

$$R_S = 0.84966 \ [1 - (0.00539) \ (0.04916) \ ]$$

$$R_S = 0.84966 \ (1 - 0.000265)$$

$$R_S = 0.84966 \ (0.999735)$$

$$R_S = 0.84943$$

The communications subsystem, therefore, has an estimated reliability of 0.849 without additional redundancy. If a redundant S-band range and range-rate system is added, then the total subsystem reliability is expressed as

$$R_S = (1 - Q_1^{\ 2}) \ (1 - Q_2 \ Q_3)$$

where Q_1 = S-band range and range-rate system unreliability.

Therefore,

$$R_S = [\ 1 - (0.15034)^2 \ ] \ (0.999735)$$

$$R_S = (1 - 0.022602) \ (0.999735)$$

$$R_S = (0.977398) \ (0.999735)$$

$$R_S = 0.977138$$

If an additional S-band range and range-rate system is added as a redundant unit, then the communications subsystem reliability estimate will improve to 0.977 for a one-year period of operation. A reliability success diagram for the communications subsystem is presented in Figure E1.

TABLE E1. - COMMUNICATIONS SUBSYSTEM RELIABILITY

System	Failure rate, %/1000 hours	Operating time, hours	Reliability
Range and range-rate system	3.7740		
Frequency converter	0.6823	8760	.942
Channel amplifier	0.2509	8760	.978
Offset amplifier	0.4807	8760	.958
	0.1669	876	.998
Amplifier	0.1909	876	.998
Frequency multiplier	0.2939	876	.997
Squelch gate	0.3857	8760	.966
	0.1777	876	.998
Miscellaneous	1.1450	876	.990
TM transmitter	0.6181	876	.994
148 MHz command receiver	0.7076	8760	.939
136 MHz beacon	0.6040	8760	.948
Total for 8760 hours	3.1112	8760	.761
Total for 876 hours	2.5925	876	.977
Total communications system	5.7037		.743

TABLE E2. - COMMUNICATIONS SUBSYSTEM RELIABILITY WITH NO ALTERNATE MODE OF OPERATION OR REDUNDANCY

Item	Estimated failure rate, %/1000 hours	Estimated operating time, hours	Reliability
S-band range and range-rate system	3.1809		0.84966
	1.7123	8760	
	1.4686	876	
TM transmitter	0.6181	876	0.99461
148 MHz command receiver	0.7076	8760	0.93988
136 MHz beacon	0.5752	8760	0.95084
Total communications subsystem	5.0818		0.75525
	2.9951	8760	
	2.0867	876	

TABLE E3. - ALTERNATE MODES OF OPERATION

Normal operation	Alternate (1) operation	Alternate (2) operation
S-band range and range-rate system		
TM transmitter	136 MHz beacon	S-band range and range-rate system
148 MHz command receiver	S-band range and range-rate system	
136 MHz beacon	TM transmitter	

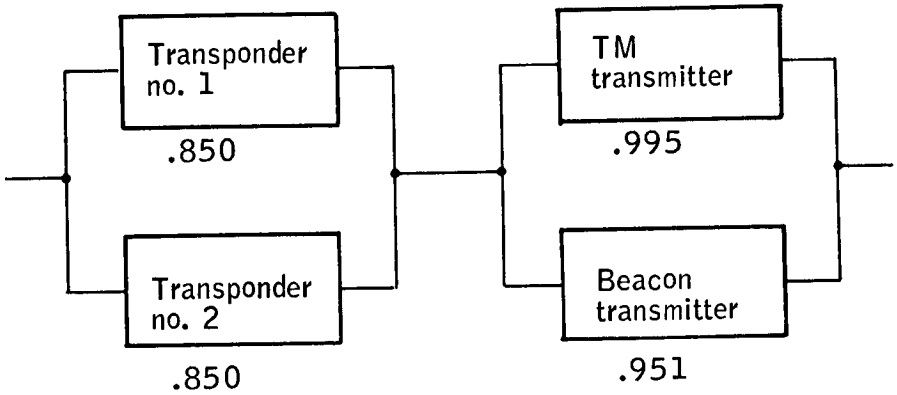

Figure E1. Reliability Success Diagram

APPENDIX F
RADIO FREQUENCY AND MODULATION STANDARD

APPENDIX F

RADIO FREQUENCY AND MODULATION STANDARD
(Ref. 26)

1.0 PURPOSE

The purpose of this Standard is to establish requirements for radio frequency emissions from spacecraft telemetry transmitters.

Adherence to this Standard is required (a) to assure spacecraft/ground systems compatibility, and (b) to permit frequency and bandwidth allocations to be made in an orderly manner.

2.0 SCOPE AND EFFECT

This Standard applies to the radio frequency characteristics of all such transmissions; it does not specify requirements for telemetry encoding techniques, except as their use affects the spectral distribution of radio frequency energy, or their compatibility with certain data acquisition techniques.

This document applies to all spacecraft Telemetry Systems on missions under the management of the Goddard Space Flight Center, and/or which require the use of the Space Tracking and Data Acquisition Network (STADAN), the Data Acquisition Facilities (DAF), or the GSFC data reduction facilities. If an exception to the Standard is required, it must be approved by the GSFC Data Systems Requirements Committee.[a]

---

[a] Address: The Director, Goddard Space Flight Center, Greenbelt, Maryland.
Attention: Chairman, GSFC Data Systems Requirements Committee, Code 520.

3.0 STANDARD (SPACECRAFT RF EMISSION)

3.1 Spectrum Allocation and Channelization

The frequency bands available to the GSFC for space-to-ground telemetry and tracking are listed in Table F1. The spectrum from 136 to 138 Mc/s and that from 400.05 to 402 Mc/s has been channelized as shown by Column 4 of the Table. NOTE: Tracking (by Minitrack) is available only in the 136 to 137 megacycle portion of the band.

3.2 Carrier Frequencies

Carrier (center) frequencies for those systems requiring only a single incremental bandwidth, i.e., (30 kilocycles in the 136 to 138 Mc/s region, or 50 kilocycles in the 400 to 402 Mc/s region) shall conform to those indicated in Column 3 of Table F1; systems which require a bandwidth in excess of 30 kc/s or 50 kc/s respectively shall be assigned center frequencies on a case-by-case basis (see Section 3.3).

3.2.1 Frequency Stability

The carrier frequency shall be stable, under all conditions of environment, ageing, and modulation, within 0.005 percent of the assigned frequency.

3.3 Channel Bandwidths

The channel bandwidths shown in Column 4 of Table F1 are those available, by assignment, for spacecraft use. All channel bandwidth assignments are made on a case-by-case basis, with due consideration of spectrum shape, adjacent channel utilization, and the operational characteristics of the telemetering system -- orbit, radiated power, commanded-on or full-time operation, expected life, etc.

Systems characterized by a transmitted bandwidth of 30 kc/s (or less) in the 136-to-138 Mc/s region, or 50 kc/s (or less) in the 400-to-402 Mc/s region shall use a single incremental bandwidth; systems characterized by greater transmitted bandwidth will be accommodated by assignment of two or more adjacent segments of the available spectrum.

TABLE F1. GSFC SPACE-TO-GROUND TELEMETRY FREQUENCY AND CHANNEL ALLOCATIONS

Frequency bands, megacycles/sec	GSFC application (a)	Center freq, megacycles (b)	Bandwidth (c) Nominal	Maximum
136 - 137	Space research telemetering and tracking (Minitrack)	136.020 to 136.980	30 kc/s	90 kc/s (max.)
137 - 138	Space research telemetering	137.020 to 137.980	30 kc/s	90 kc/s (max.)
400.05 - 401	Space research telemetering	400.100 to 400.950	50 kc/s	300 kc/s (max.)
401 - 402	Space research telemetering	401.000 to 401.950	50 kc/s	300 kc/s (max.)
1700 - 1710	Space research telemetering	Pending		

[a] In consonance with agreements reached by the Extraordinary Administrative Radio Conference, at Geneva October 7 thru November 8, 1963.

[b] Channel (center) frequencies are 136.020 to 136.980, and 137.020 to 137.980, inclusive, in 30 kc/s increments; 400.100 to 401.950, inclusive, in 50 kc/s increments. See also 3.2 - Carrier Frequencies.

[c] See 3.3 - Channel Bandwidths

3.3.1 Guard Bands - Guard bands are provided adjacent to major edges only. The width of these bands has been determined from a consideration of allowable carrier frequency instability, plus a nominal allowance for doppler shift. No guard bands are provided between channels within the bands.

3.4 Frequency and Channel Bandwidth Assignments

Carrier (center frequencies), and Channel Bandwidths are assignable only by the GSFC Directorate Support Office (Frequency Control).[b] Requests for such assignments shall be accompanied by specific technical and operational information.

3.5 Spectrum Considerations

The character of radio-frequency emissions of spacecraft telemeters shall conform to the following requirements:

3.5.1 Transmitted Bandwidth - The transmitted bandwidth at the 10dB points, under all conditions of modulation, Doppler shift, and transmitter oscillator instabilities, shall not exceed the assigned channel bandwidth. The spectrum of radiated power, at frequencies outside the assigned channel, shall not contain components which exceed the levels indicated by the solid line of Figure FI-1 (Appendix FI). At frequencies beyond those indicated by Figure FI-1, the power level of spectral components shall meet the requirements for Spurious Emissions (Section 3.5.3).

3.5.2 Receiver IF Bandwidths - Telemetry system designers shall consider the capabilities available at the specific ground stations to be used. Table FI-1 (Appendix FI) presents the IF bandwidths and detection capabilities provided by the basic telemetry receiving systems at the STADAN Stations. System designers and operations planners are cautioned that data acquisition facilities are not identical at all stations; a complete and detailed description of all such capabilities are beyond the scope of this Standard. This information is available in a periodically revised and updated GSFC Document (ref. 27).

---

[b] Address: NASA Goddard Space Flight Center, Greenbelt, Maryland, 20771.
Attention: Directorate Support Office (Frequency Control) Code 505.

3.5.3 Spurious Emissions - The total spurious transmitter output power shall not exceed three microwatts, or 60 dB below the total power radiated, whichever is greater. Spurious transmitter output is defined as any spectral component which is not implied by type of modulation; included are harmonics, crossmodulation products, parasitics, etc. Spurious emissions shall be checked under modulated and unmodulated conditions.

3.5.4 Interference with Other Services - In addition to all other requirements of this Standard, the total incident power density, at the earth's surface, in certain frequency bands used for radio astronomy, shall not exceed the levels shown in Tables F2 and F3.

3.5.5 Control of RF Emissions - Any satellite, or other space vehicle, which is to be launched into space, shall be so equipped as to assure the ability to control the radio-frequency emissions from the spacecraft transmitter(s), on and off, by ground telecommand signals; the following are the only conditional exceptions to this requirement:

a. For satellites operating in the communication-satellite service in allocated frequency bands, and

b. For research and scientific spacecraft where space and weight limitations preclude installation of such a system and/or the duration and nature of the operation does not warrant incorporating this capability.

In the foregoing exceptional cases, however, such spacecraft shall be equipped with other devices such as battery life, timing devices, etc., or shall possess such operational features which will provide for definite cessation of RF emissions when the spacecraft has performed its planned function.

4.0 MODULATION STANDARDS (RF CARRIER AND/OR SUBCARRIERS)

In specifying modulation, the spacecraft telemeter and the ground station receivers shall be considered as a system. In addition, the requirements for limiting the transmitted bandwidth (Section 3.5.1) must be met. Spacecraft telemetry transmitters may be phase modulated (PM), frequency modulated (FM), or amplitude modulated (AM). Combinations of the foregoing shall not be used directly on the carrier, or on any subcarrier. This does not exclude the use of FM subcarriers, which in turn phase modulate the carrier, or similar techniques.

---

[c] These Tables are reproduced from CCIR Document IV/137-E, 2/24/65.

TABLE F2. - SENSITIVITY (ΔT_e) OF TYPICAL CONTINUUM MEASUREMENTS AND FLUX DENSITY S_H WHICH CAUSES HARMFUL INTERFERENCE

Frequency, f, Mc/s	Minimum antenna temperature (1), T_a, °K	Receiver temperature, T_{eff}(2), °K	Typical bandwidth, B, Mc/s	Sensitivity, ΔT_e, °K	Minimum harmful power input, ΔP_H, dBW	Level of signal causing harmful interference (isotropic antenna)(3)		
						Power flux		Field strength, E_H, dB(μV/m)
						$S_H B$, dB(W/m²)	S_H, dB[(W/m²)(c/s)⁻¹]	
20	32000	200	0.1	1.6	-186	-199	-249	-53
40	6200	200	0.1	0.32	-193	-200	-250	-54
80	1000	200	1	0.02	-196	-196	-256	-51
150	200	200	2	0.0045	-199	-194	-257	-48
327	40	100	2	0.0016	-204	-192	-255	-46
408	26	100	2	0.0014	-204	-190	-253	-45
610	16	100	8	0.00065	-201	-184	-253	-39
1420	10	20	27	0.00009	-205	-180	-254	-35
1665	10	20	4	0.00024	-209	-183	-249	-37
2700	10	20	10	0.00015	-207	-177	-247	-31
5000	10	20	10	0.00015	-207	-171	-241	-26
10680	12	20	20	0.00011	-205	-163	-236	-17
15350	18	100	50	0.00026	-197	-152	-229	- 6

TABLE F3. - SENSITIVITY (ΔT_e) OF TYPICAL LINE MEASUREMENTS AND FLUX DENSITY S_H WHICH CAUSES HARMFUL INTERFERENCE

Bandwidth at 0.01 Mc/s (4)

Frequency, f, Mc/s	Minimum antenna temperature (1), T_a, °K	Receiver temperature (2), T_{eff}, °K	Sensitivity, ΔT_e, °K	Minimum harmful power input, ΔP_H, dB W	Level of signal causing harmful interference (isotropic antenna)(3)		
					Power flux		Field strength, dB (μV/m)
					$S_H B$, dB (W/m^2)	S_H, dB [(W/m^2) (c/s)$^{-1}$]	
327	40	100	0.02	-216	-204	-244	-58
1420	10	20	0.005	-222	-197	-237	-51
1665	10	20	0.005	-222	-196	-236	-50

Notes

(1) Noise from the ground has, provisionally, been assumed to increase the antenna temperature by 10°K.

(2) Referred to antenna terminals.

(3) For an antenna of power gain G(dB) in the direction of any unwanted signal, reduce all values by G.

(4) Typical for a single channel of a multi-channel or tunable receiver. Total band required is much greater (see Section 1 of this Annex).

General Note: An integration time (or total time of observation) of 2000 sec is used throughout. For longer integration times the minimum detectable power flux will be lower and the unwanted signal will be harmful at correspondingly lower levels. For example with a time of observation of ten hours the relevant figures in the Tables should be reduced by 6 dB.

4.1 Phase Modulation

4.1.1 Application

Phase modulation of the RF carrier is widely employed to obtain the advantages of coherent detection. It may also be used in noncoherent systems where the signal to be transmitted consists of one or more sinusoidal waveforms.

4.1.2 Deviation

When using coherent detection techniques, sufficient power shall be left in the carrier to assure reliable acquisition and maintenance of phase lock by the ground receivers. To avoid carrier suppression, at least 10 percent of the total transmitted power shall be left in the carrier.[d] Phase deviation on noncoherent systems is limited only by the channel bandwidth assignment.

4.1.3. Modulation Waveform

Coding waveforms whose duty cycle varies in response to information content shall not be used to directly modulate the carrier. A 50 percent duty cycle must be assured within a period T, where T is sufficiently short to prevent any recognizable modulation components from falling within the highest loop bandwidth to be used in the phase locked receiver. Noncoherent systems must only be modulated by one or more sinusoidal waveforms.

4.1.4 Linearity

Due to the non-linearity of the phase-locked detectors, systems requiring linear detection characteristics should utilize coherent PM detection with caution.

4.1.5 Phase Instability

Phase instability of the RF carrier shall not exceed 0.05 radian rms, measured in the lowest loop-bandwidth to be used; a suitable receiver incorporating a stable phase-lock phase detector with selectable loop bandwidths shall be used for this measurement.

---

[d] Network stations are not currently equipped for PSK (±90°) bi-phase demodulation.

4.1.6 Incidental Modulation

4.1.6.1 Incidental Amplitude -- Modulation of the phase modulated carrier shall not exceed 5 percent of the peak unmodulated carrier amplitude.

4.1.6.2 Incidental Frequency -- Modulation shall be minimized; in no event shall the purity of phase modulation be a function of bit rate or of the frequency of components in the spectrum of the modulating wave.

4.2 Frequency Modulation

4.2.1 Applications

Frequency modulation is acceptable for spacecraft telemetry transmitters. Its use affords less complex ground operation through noncoherent receivers, provides the ability to obtain very high signal-to-noise ratios above threshold as a result of its improvement factor, and places no restrictions on the modulating waveform.

4.2.2 Modulation Technique

The modulating process must result in the varying of a single oscillator in frequency in such a manner that no abrupt phase discontinuities occur; not by alternately switching from one oscillator to another, unless special design considerations are employed which assure no abrupt phase discontinuities.

4.2.3 Deviation

The peak-to-peak deviation shall be limited by the bandwidth assignment; also see Appendix Figure FI -1 for limitations on power radiated outside the assigned channel bandwidth.

4.2.4 Incidental Modulation

Incidental amplitude modulation (AM) of the carrier shall not exceed 5 percent.

4.3 Amplitude Modulation

4.3.1 Application

Amplitude modulation of the carrier is not frequently used in spacecraft telemetry systems; however, it is acceptable subject to the following restrictions:

4.3.2 Modulation Factor

The modulation factor shall not exceed 1.0.

4.3.3 Symmetry of Modulation

The modulation shall be symmetrical; i.e., as measured from the amplitude of the unmodulated carrier, the positive peak excursions and negative peak excursions shall be symmetrical.

4.3.4 Suppressed Carrier

Total suppression of the carrier is not acceptable, including single sideband (SSB) or other techniques with partially suppressed carrier. For lower carrier/side-band power ratios, or for coherent systems, the use of PM is preferred.

4.3.5 Incidental Modulation

Incidental frequency modulation shall not result in more than 20 cps peak-to-peak deviation of the carrier.

APPENDIX FI

The purpose of this appendix is to further clarify the requirements of Sections 3.4.1 and 3.5.2 of the RF and Modulation Standard.

Ref: Section 3.5.1 Transmitted Bandwidth

The requirements of Section 3.5.1 are in the interest of reducing adjacent and interchannel interference. Figure FI-1 shows the tolerable limit on power radiated outside the assigned channel bandwidth. The x-axis of the plot is in normalized frequency, and is thereby applicable to any assigned bandwidth. Only the positive half of the channel is shown; the total bandwidth of the assigned channel extends from $x = -1$ to $x = 1$. For example, if the assigned bandwidth is 30 kcs, $x = \pm 1$ corresponds to points 15 kc/s above and below the center frequency; $x = 2$ corresponds to the center frequency of the upper adjacent channel, if it too is a 30 kcs channel, etc.

The limiting line has a slope of -18 dB per octave, referred to a frequency equal to 1/2 the assigned channel bandwidth.

Ref: Section 3.5.2 Receiver IF Bandwidths

Table FI-1 presents the IF bandwidths and detection capabilities provided by the basic telemetry receiving systems at the STADAN stations.

TABLE FI-1. STADAN TELEMETRY RECEIVER CAPABILITIES

IF (predetection) bandwidths	PM or SYNC AM	FM discriminator detection	AM envelope detection
10 kc/s	X	X	X
30 kc/s	X	X	X
100 kc/s	X	X	X
300 kc/s	(X)[a]	X	X
1 Mc/s		X	X
3 Mc/s		X	X

[a] (X) Available at stations equipped with GD/E Diversity Receiver/ Electrac 215.

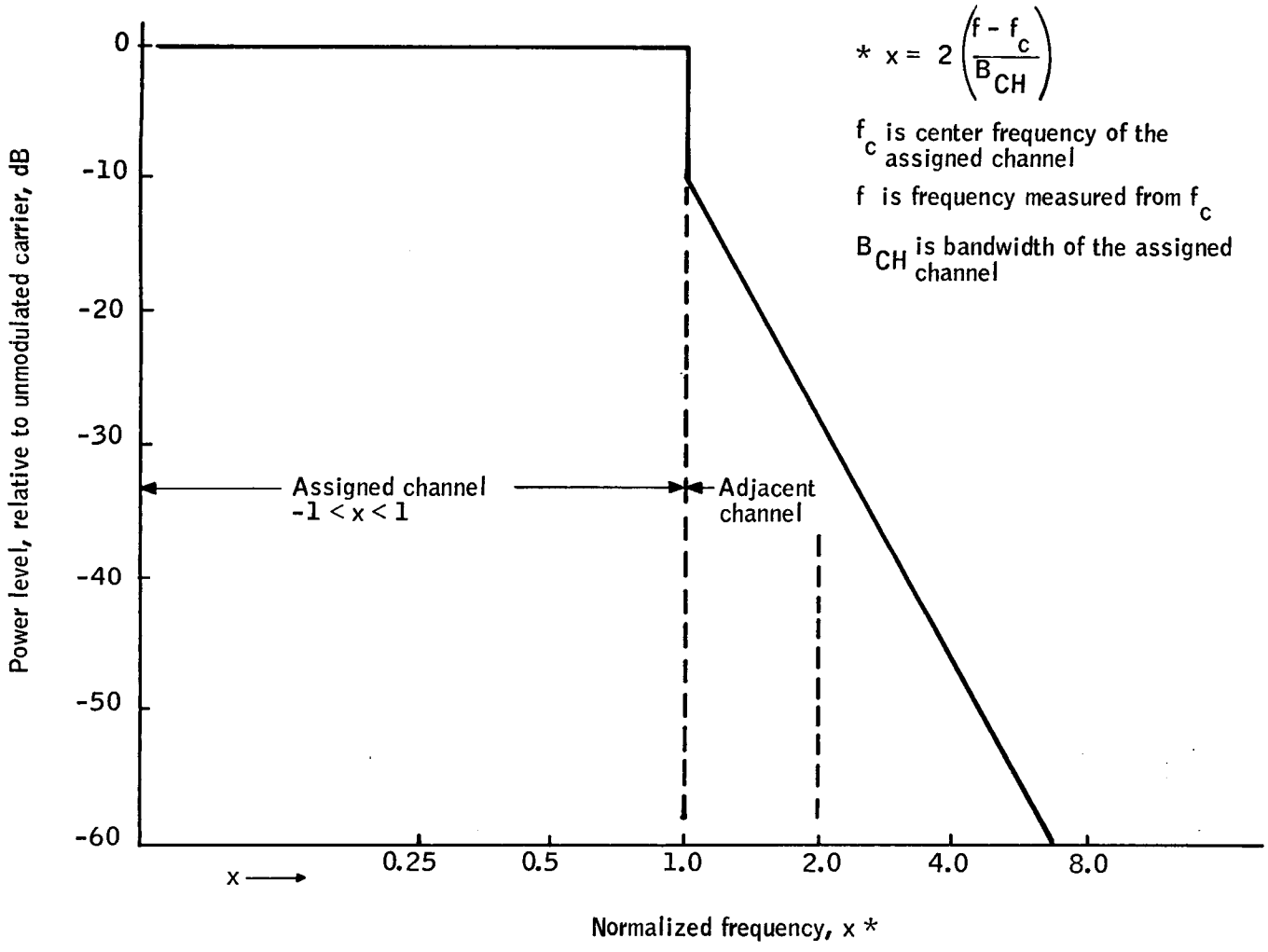

Figure F1-1. Limit on Transmitted Bandwidth

APPENDIX FII

SPACECRAFT MINITRACK SIGNAL SOURCE STANDARD
(Ref. 28)

1.0 INTRODUCTION

A tracking beacon signal source must be provided on all spacecraft which will require Minitrack support from the Space Tracking and Data Acquisition Network (STADAN). The source provides a continuous radio frequency signal to the ground based receiving systems for use in the acquisition and tracking of the spacecraft.

2.0 PURPOSE

The purpose of this standard is to define requirements which the spacecraft radio signal must meet in order to be compatible with the Minitrack System.

3.0 SCOPE

This document applies to all spacecraft that require Minitrack support. If an exception to this standard is required, it must be approved by the GSFC Data Requirements Systems Committee.[e]

4.0 STANDARDS

4.1 Frequency

The frequency shall be within the 136 Mc to 137 Mc band as assigned to a specific spacecraft by the GSFC Frequency Manager.[f]

---

[e] Address: The Director, GSFC, Greenbelt, Maryland
Attention: Chairman, GSFC Data Requirements Systems Committee, Code 520

[f] Address: The Director, GSFC, Greenbelt, Maryland
Attention: GSFC Frequency Manager, Code 510.

4.2 Stability

The frequency shall remain within ±5kc of the assigned frequency under the combined effects of aging, temperature, vibration and specified operating conditions.

4.3 Modulation

Modulation components at 50 ±5cps, 100 ±5cps, and 200 ±5cps shall be at least 35 dB below the average power output, within a 10kc band centered on the carrier.

4.4 Power Output

The radiated power output shall be sufficient to give a signal strength of at least -120 dBm within the Minitrack 10kc I. F. bandwidth at the Minitrack receiver inputs. The Minitrack antenna gain is 16 dB with linear polarization. The received signal level of -120 dBm has been chosen to permit operation with satellite elevation angles above 45°.

REFERENCES

1. Anon.: Satellite Tracking and Data Acquisition Network Facilities Report. NASA Goddard Space Flight Center, X-530-66-33, December, 1965.

2. Anon.: Aerospace Data Systems Standards. NASA Goddard Space Flight Center, X-560-63-2, January, 1963.

3. Radio Research Laboratory Staff: Very High Frequency Techniques, Vol. I, McGraw-Hill Book Co., 1947, Chapter 7.

4. Jasik: Antenna Engineering Handbook. McGraw-Hill Book Co., 1961, Chapter 8.

5. Kraus: Antennas. McGraw-Hill Book Co., 1950.

6. Becker; and Lawton: Theoretical Comparison of Binary Data Transmission Systems. Aeronautical Lab. Rept., No. CA-1172, May 1958.

7. Lawton, John G.: Final Report on Investigation of Analog and Digital Communications Systems. Cornell Aero Lab., Report No. UA-1420-S-3.

8. Habib, E.J.; Kronmiller, G.C., Jr.; Engels, P.D.; and Franks, H.J., Jr.: Development of a Range and Range Rate Spacecraft Tracking System, NASA TN D-2093, June, 1964.

9. Kronmiller, G.C., Jr.; and Baghdady, E.J.: The Goddard Range and Range Rate Tracking System Concept, Design and Performance. NASA X531-65-403, October 1965.

10. Reed, H.R.; and Russel, C.M.: Ultra High Frequency Propagation. John Wiley and Sons, Inc., New York, N. Y., 1953, p. 35.

11 Kerr, D.E., ed.: The Propagation of Short Radio Waves. MIT Rad. Lab. Ser., McGraw-Hill Book Co., Inc., New York, N.Y., Vol. 13, 1951, pp. 328-335 and 382-385.

12. Ames, L.A.; Martin, E.J.; and Rogers, T.F.: The Airborne Measurement of 1.36 m Fields to Ranges in Excess of 900 Miles at Altitudes from the Surface to 30,000 ft., Electromagnetic Wave Propagation, Academic Press, Inc., New York, N.Y., 1960, pp. 215-226.

13. McCaddon, J.F : Report on Extended Range VHF Communications at Shannon, Ireland. Communications Dept., Pan American World Airways, Inc., Atlantic Division, New York, N.Y.; September 1959.

14. Ringwalt, D. L.; and MacDonald, F. C.: Elevated Duct Propagation in the Tradewinds. IRE Trans. on Antennas and Propagation, Vol. AP-9, July 1961, pp. 377-383.

15. Wave Propagation Branch Staff: The Elevated Duct Between San Diego and Hawaii. Naval Research Lab., Washington, D.C., NRL Progress Report, April 1961, pp. 1-13.

16. Goldman, S.: Frequency Analysis Modulation and Noise. McGraw-Hill Book Co., 1948, pp. 98-100.

17. Baghdady, E.J.: Lectures on Communications Theory. McGraw-Hill Book Co., 1961, p. 533.

18. Baghdady, E.J.: P.I.E.E.E., Sept. 1963, p. 1260-1261.

19. Hansen, R.C.: Microwave Journal, June 1959.

20. Anon.: Handbook Range and Range Rate System Operation, Motorola, 1 July 1964.

21. Peterson, Roy E.; Thomas, John R.; Vogelzang, William F.; and Watson, Bruce F.: A Study of Data Requirements, System Constraints, Operational Methodology, and Data Analysis Techniques for a 15-Micron Horizon Radiance Measurement Experiment. NASA CR-66379, May 1967.

22. Vogelzang, W. F.; and Ohring, G.: The 15μ Infrared Horizon Radiance Profile Temporal, Spatial, and Statistical Sampling Requirements for a Global Measurement Program. NASA CR-66190, October 1966.

23. GSFC Data Requirements System Committee: Part II Command Standards, Section II Tone Digital Command Standard. NASA Goddard Space Flight Center, 15 January 1963.

24. GSFC Data Systems Requirements Committee: Pulse Code Modulation Telemetry Standard. NASA Goddard Space Flight Center, 27 January 1966.

25. Engineering Support Office, Network Engineering and Operations Division: Goddard Range and Range Rate System S-Bond Transponder Specifications. NASA Goddard Space Flight Center, January 1967.

26. GSFC Data Systems Requirements Committee: Aerospace Data Systems Standards: Part III, Associated Standard, Section I, Radio Frequency and Modulation Standard for Space to Ground Telemetry. Goddard Space Flight Center, 4 November 1965.

27. Anon.: Satellite Tracking and Data Acquisition Network Facilities Report (STADAN). X-539-64-159, June 1964.

28. GSFC Data Systems Requirements Committee: Aerospace Data Systems Standards: Part III Associated Standards, Section III, Spacecraft Minitrack Signal Source Standard. NASA Goddard Space Flight Center, 3 October 1963.