NEOTEC
CORPORATION

CR 26.1
January 2, 1968
Contract NAS 8-21069

FINAL REPORT

ISOTHERMAL HEAT FLUX SENSING UNIT

For The Period

June 21, 1967 to January 2, 1968

Prepared By:

Neotec Corporation
640 Lofstrand Lane
Rockville, Maryland 20850

For Submittal To:

National Aeronautics & Space Administration
George C. Marshall Space Flight Center
Huntsville, Alabama 35812

Prepared By:

Donald R. Webster
Ronald C. Cannizzaro

Approved By:

William L. Dunham

TABLE OF CONTENTS

LIST OF FIGURES

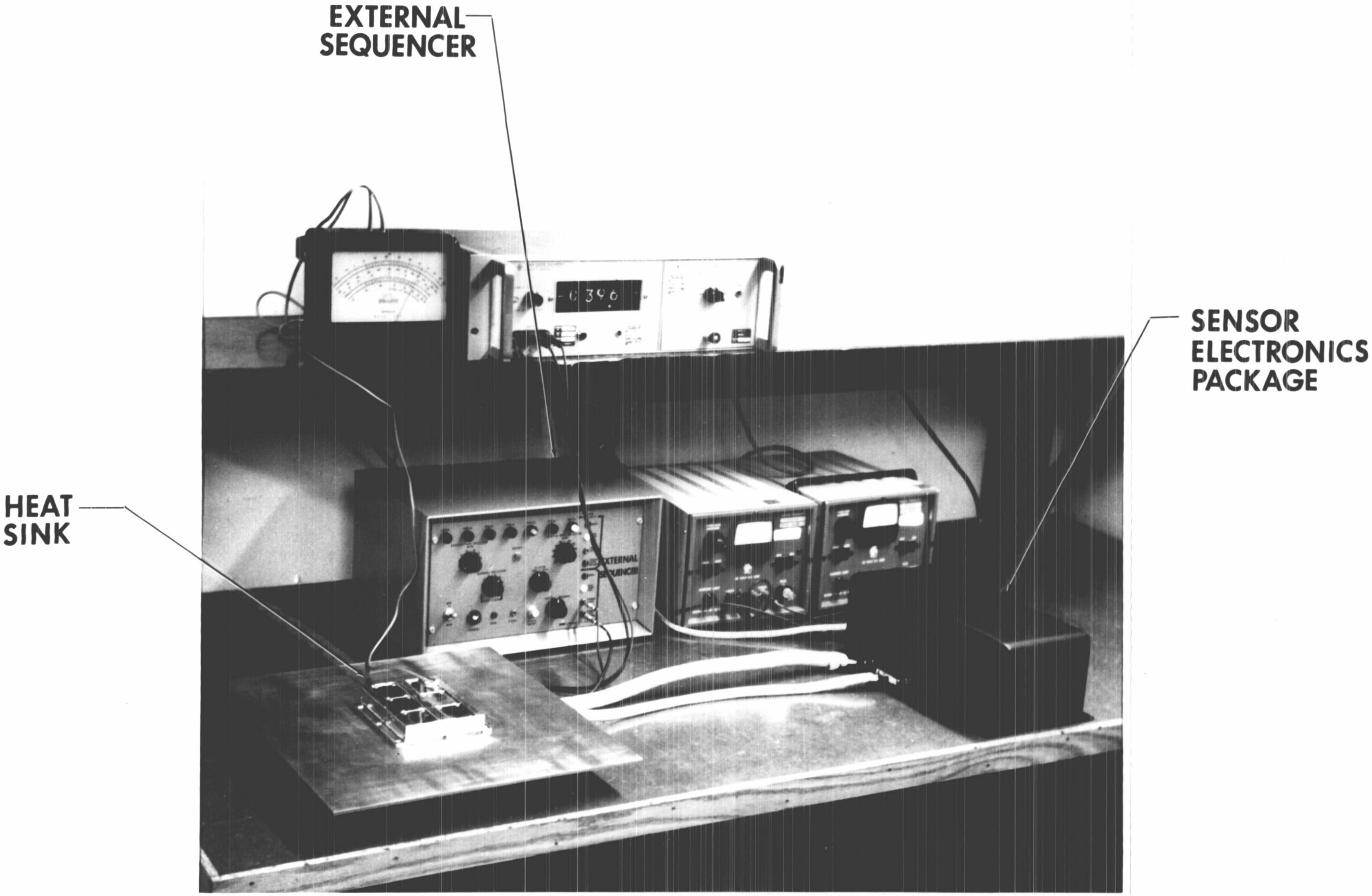

ISOTHERMAL HEAT FLUX SENSING UNIT

#IV

1.0 PROGRAM SUMMARY

This section summarizes the Isothermal Heat Flux Sensing Unit Program (herein called IHFSU) as performed under contract to the Marshall Space Flight Center.

1.1 PROGRAM DESCRIPTION

The Isothermal Heat Flux Sensing Unit (IHFSU) Program was initiated by the Neotec Corporation in June of 1967 under contract NAS 8-21069 to the Marshall Space Flight Center. The goal of this program was to develope an instrument capable of evaluating the characteristics of a multiple of thermal coatings in the actual environment within which these coatings are intended to operate. In particular, data describing both absorptance and emittance of coatings as a function of time and temperature in an orbital environment was desired.

Attainment of this goal involved two serially arranged phases of effort. The first phase was concerned with the thermal design study of the parameters associated with the unit. Power and weight were the key parameters in this analysis and were used as the balancing factors to satisfy thermal transient and steady state requirements.placed upon the instrument. The second phase was an actual design and development of the instrument itself. This effort culminated in an instrument which successfully achieved the stated goals of the program.

1.2 SYSTEM DESCRIPTION

The complete instrument as designed consists of three separate packages; the Heat Sink and Thermoelectric units, the Sensor Electronics package and the External Sequencer. The function of the sequencer is to program operation of the instrument in a manner analogous to a set of assumed spacecraft control functions. It also provides sufficient controls and circuitry to sequentially energize the six thermoelectric modules. The power-on time and the power duty cycle are both adjustable. In addition, provisions are made for manual operation.

The actual coatings under evaluation are mounted to the top of six two stage thermoelectric heater-cooler units. All six units are mounted to the heat sink and this assembly is exposed to space (or appropriate thermal sink temperature) during the experiment. The selection of thermoelectric element size and subsequently the heat sink geometry and material were determined on the basis of intensive thermal analysis performed during the first phase of the program.

The Sensor Electronics package contains the circuits necessary to derive program control singnals from the External Sequencer and utilize these to individually control the temperature of the six thermal coating sample plates. Operation is effected by presetting the temperature levels of all upper and lower T. E. units and then selecting the pair to be activated. Once this is accomplished and the system is activated, two independent electronic servo systems control the power input level to the selected Upper and Lower modules in such a manner that each sample is driven to its preset temperature.

Each servo system operates by sensing the temperature of the thermoelectric element under control and directing current into or out of the element. This action either heats or cools in such a manner that the element is driven towards it's preset temperature. Once the preset temperature is reached, the system automatically adjusts the current to a level sufficient to maintain the preset temperature.

A single servo system is used to control all six upper units and a second servo system is used to control the corresponding lower units. This is accomplished by multiplexing the active temperature sensors into a single bridge element for each servo system and commutating power to the corresponding thermoelectric pairs.

1.3 RESULTS AND RECOMMENDATIONS

1.3.1 Results

The IHFSU system was tested and operated successfully. Temperature levels were preset and the electronic servo systems were able to control the sample plate temperatures to these levels. The maximum differential temperature achieved in the laboratory for the cooling mode was 64^{o}K.

The actual temperature of each thermoelectric element is settable to within $\pm 2^{o}$C over the range of -60^{o}C to $+125^{o}$C. Once the temperature is set the repeatability is better than $\pm 0.2^{o}$C. The set point accuracy is a function of the resolution of the trim potentiometers used to preset the temperature and the repeatability is a function of the accuracy of the closed loop temperature control system. In most applications, the repeatability factor is more important than the absolute temperature (as long as it is known). For this reason, low temperature coefficient temperature adjusting potentiometers are used instead of the higher temperature coefficient carbon types. This results in some loss in settable resolution but maintains a high degree of repeatable accuracy.

The electronic servo system gain is such that the so-called "hang off" is less than $\pm 2^{\circ}$C. This results from the requirement that a finite difference must exist between the set point temperature and the actual sample temperature in order to maintain proportional temperature control. A system monitoring point is available, which indicates the magnitude of this difference. Therefore, any changes in sample plate temperatures due to changing environmental conditions are readily measurable and will never exceed $\pm 2.0^{\circ}$C.

Silicon controlled rectifiers are used to control the power input into each thermoelectric element. Since the system both heats and cools, there existed a possibility that heating and cooling SCR's would be triggered simultaneously at the nulled temperature point where extremely low power levels are required. This is due to the finite system system noise level. To avoid this possibility, a $2/3^{\circ}$C dead band was placed in the system around the null temperature point. This means that a finite ΔT (about 3°C) must be preset across each thermoelectric element so that a finite amount of input power is required at all times. When this is done, the system then operates in its linear region and accurate measurements can be made.

1.3.2 Recommendations

1.3.2.1 Sample Plate Size

The thermal analysis performed on this system did not consider the sample plate size (10 sq. cm.) as a variable. This sample size results in a 2 watt maximum heat load, thereby dictating the size and power levels of the thermoelectric elements. To a first order approximation the power requirements would vary linearly with sample plate area. Further study would be required to optimize sample plate area against such parameters as resulting experiment accuracy and power consumption and limiting ΔT.

1.3.2.2 Radiometer Configuration

This system was designed to achieve the coldest possible sample plate temperature within reasonable limits. To do this, two independently controlled thermoelectric elements are stacked on top of one another and are driven from SCR power sources capable of handling large amounts of power. At very low power levels, there exists a discontinuity due to the inability of the phase controlled SCR's to switch low power levels. Therefore, it is necessary to maintain a small ΔT across each thermoelectric element. To operate the system as a radiometer, the upper thermoelectric element should have a minimum ΔT. Although the minimum level mentioned is acceptable in this application, more accurate systems could be derived whereby the upper thermoelectric element was controlled differentially such that its ΔT is always driven to zero. To accomplish this, transistors would be used to control the power input. This would preclude the efficient handling of large power levels; however, since the ΔT is always zero, large power levels would not be required. An alternate approach would be to use sign wave power input instead of square waves which are now used. The SCR power controllers could then handle much lower power levels. The cooling efficiency at the higher power levels would be reduced, but here again with a zero ΔT, high power levels are not required. To devise this system, a trade-off study should be performed to determine the optimum configuration. One approach would be to add a third thermoelectric element to the two stacked modules now in existence or devise a new two stacked array based on different operating requirements than were considered for this program.

1.3.2.3 Heat Sink

The present heat sink thermal design is an adequate design for laboratory use of the IHFSU. There are, however, several areas which warrant investigation since the heat sink provides two important functions for the system: (1) provides an initial cold temperature sink for the thermoelectric modules, and (2) absorbs the heat generated at the hot junction of lower thermoelectric modules.

The thermal control of the heat sink is accomplished with a passive thermal design. The stability and thermo-optical property characteristics of the coating can affect the thermoelectric module performance. An analysis should be made of effect of the Z-93 stability on the heat sink thermal performance.

If a lower sample plate temperature is desired without an increase in power, a lower α/ϵ ratio for the heat sink coating can be utilized. This ratio, however, must be much lower than Z-93 or aluminized H-Film ($\alpha/\epsilon \approx 0.1$) to be effective. Such a coating is SSM (second surface mirror finish) with an $\alpha/\epsilon = 0.056/0.85 = 0.0658$. This is a definite area which requires further analysis.

The effects of a transient thermal environment on the heat sink and thermoelectric modules should also be analyzed. The transient environment can be artificially imposed (sin or cos variation) or the actual orbital fluctuations considered.

Various means of active thermal control of the heat sink should be investigated so that the thermoelectric module can be more effectively controlled during transient conditions. Also, thermal control of an individual thermoelectric module can be achieved with an active system. Several types of active thermal control systems seem applicable for the IHFSU. These are: finned-tube radiators, phase change materials, and the heat pipe concept.

An investigation of lightweight, high thermal conductivity materials should be made since the area immediately surrounding the thermoelectric modules only requires both the high thermal mass and thermal conductivity properties. The area surrounding the T/E units serves only to conduct the heat away from the hot junction of the lower modules, necessitating the high thermal conductivity property only.

The effect of extraneous heat inputs/leaks (spacecraft components, sink temperature of spacecraft outer shell, contact of IHFSU with vehicle surface and electrical connections to vehicle) to the heat sink area surrounding the T/E modules should be analyzed, since the heat sink temperature is critical in the achievement of the lower sample plate temperature.

2.0 THERMAL ANALYSIS

A detailed thermal analysis of the Isothermal Heat Flux Sending Unit (IHFSU) was performed to determine the minimum weight and power requirements consistent with a useful experiment. Several key ground rules were established during the program which were different than the original statement of work. These are:

- Lower sample plate temperature increased from 150°K to 250°K.
- The orbital thermal thermal environment was assumed to be constant.

The results of the detailed thermal analysis show that the IHFSU has the capability of meeting the 250°K lower sample plate temperature with an acceptable power requirement of 35 to 40 watts.

The results of the transient analysis in terms of a IHFSU thermal design are given below:

Heat sink area = 1.5 $ft.^2$
Heat sink thickness = 0.5 inches
Heat sink material is aluminum
Number of Lower couples = 31 (Unit # CP2-31-06)
Number of Upper couples = 10 (Unit # CP2-31-10)
Thermo-optical coating recommendation is Z-93

This analysis was concerned with determining the achievable lower sample plate temperature only as the desired upper sample temperature of 400°K is well within the thermoelectric heating capability of the IHFSU.

2.1 THERMOELECTRIC COOLING RELATIONSHIPS

The following section is a description of the thermoelectric cooling relationships utilized in the thermal analysis of the IHFSU. These relationships are shown for steady- state conditions and for constant temperature thermal properties. The thermal property variation with temperature will be shown in a later section.

The basic geometrical relationships are shown in Figure 2-1. A thermoelectric element or couple is composed of an n-type and p-type semi conductor material. These are connected with a metallic bridge.

When the junction at which heat is generated is maintained at a constant temperature to, then the other junction will cool down until the sum of the heat transferred from the surroundings (Q_O) and the heat flowing along the arms of the thermoelement becomes equal to the absorbed Peltier heat. This steady state condition is

$$Q_\pi = Q_o + Q_T$$

where Q_π is the Peltier heat and given by the relationship

$$Q_\pi = \pi I \, .$$

$$\pi = (\alpha_p - \alpha_n) T$$

where π is the Peltier coefficient, I is the current, α_p and α_n are the thermal emf's (or Seebeck coefficients) for the p and n-type arms and T is the temperature (^{O}K) of the corresponding junction.

The heat flux Q_T reaching the cold junction along the arms of the thermoelement consists of two parts:

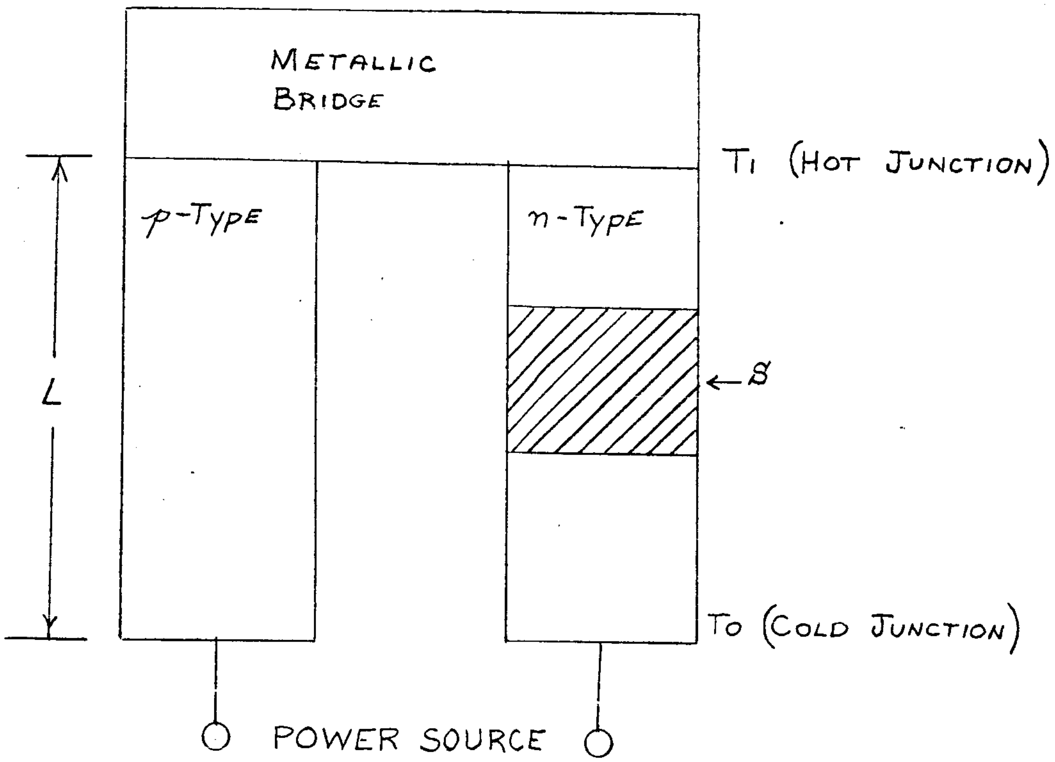

FIGURE 2-1
SCHEMATIC OF THERMOELECTRIC ELEMENT

1. The heat transferred by thermal conduction

$$K(T_0 - T_1)$$

where K is the thermal conductance of the thermoelement arms; and

2. half of the Joule heat generated within the arms of the thermoelement.

$$\frac{1}{2} I^2 R_{INT}$$

Equation (1) can then be written in the form:

$$Q_0 = \pi I - \frac{1}{2} I^2 R_{INT} - K(T_0 - T_1)$$

The heat generated at the hot junction of the thermoelement consists of two parts and is given by the steady-state equation

$$Q_1 = Q_J + Q_{TH}$$

Q_j is the heat generated in the arms of the thermoelement

$$Q_J = I^2 R_{INT}$$

and Q_{TH} is the power required to overcome the thermal emf.

$$Q_{TH} = \epsilon I = (\alpha_p - \alpha_n)(T_0 - T_1) I$$

therefore the hot junction heat is given by

$$Q_1 = (\alpha_p - \alpha_n)(T_0 - T_1) I + I^2 R_{INT}$$

2.2 THERMOELECTRIC PROPERTIES

The properties of the thermoelement are defined as

α - Seebeck coefficient or thermal emf, volts/deg ^{O}K
K - Thermal conductance, watts/cm- ^{O}K
ρ - Electrical resistivity, Ω cm
r - Internal resistance, Ω

These properties are dependent on the following characteristics:

1. Dopent properties of the arms
2. Geometry of the arms (length and cross-sectional area, see Figure 2-1)
3. Number of elements or couples (couple or element defined as one p-type arm and one n-type arm)
4. Temperature

The effective thermoelectric properties of a unit (as detailed in Ref. 1) are given as follows:

The thermal emf or Seebeck coefficient is equal to the sum of the thermal emf's of the two arms, and is given by:

$$\alpha = |\alpha_p| + |\alpha_n| \quad \text{volts}/^{o}K/\text{couple}$$

where αp and αn are the thermal emf's for the p-type and n-type arms respectively.

The internal resistances of the p and n-type branches are r_p and r_n and their thermal conductances K_p and K_n respectively. Assuming that the length of both arms are equal to L and their cross sectional areas by A_p and A_n, we have

$$r = r_p + r_n = \left(\frac{\rho_p}{A_p} + \frac{\rho_n}{A_n}\right)L \;, \quad \Omega/\text{couple}$$

where ρ_p and ρ_n are the electrical resistivities of p and n-type arms, respectively.

$$K = K_p + K_n = \left(k_p A_p + k_n A_n\right)\frac{1}{L}, \text{watts/cm-°K/couple}$$

and

where k_p and k_n are the thermal conductivities of the p and n-type arms.

The relationships given above for α, ρ, and K are on a per couple basis so that the properties on the thermoelectric unit must be multiplied by the total number of couples or elements.

These thermoelectric properties have been shown to vary as much as 30% in the temperature range from 150° K to 400° K (see Reference 2). The properties used in this thermal analysis were therefore considered to be temperature dependent. The values for α, k, and ρ are shown in Figure 2-2 for the range of 150 to 400°K.

2.3 THERMAL ANALYZER MODEL

The Thermal Analyzer Computer Program was utilized to determine the transient response of the IHFSU. This analysis was done in parametric form so that power and weight requirements of the unit could be evaluated.

The following are the assumptions utilized in this analysis:

- Only one thermoelectric unit was operating (razor blade coating characteristics)
- The orbital environment to the heat sink was based on a nominal 300 n. m. orbit without variation during the orbit.

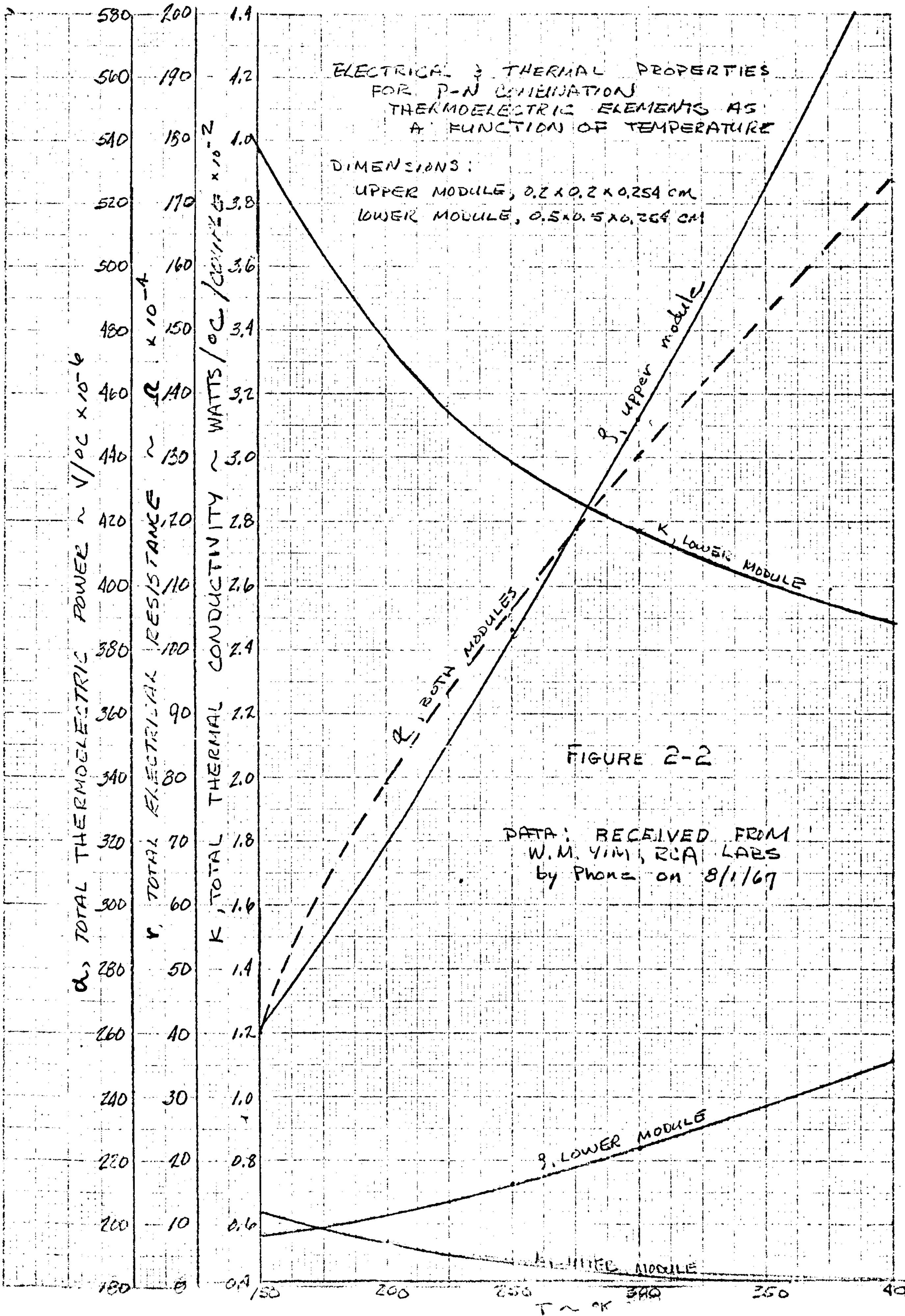

ELECTRICAL & THERMAL PROPERTIES
FOR P-N COMBINATION
THERMOELECTRIC ELEMENTS AS
A FUNCTION OF TEMPERATURE

DIMENSIONS:
UPPER MODULE, 0.2 × 0.2 × 0.254 CM
LOWER MODULE, 0.5 × 0.5 × 0.254 CM

FIGURE 2-2

DATA: RECEIVED FROM
W.M. YIM, RCA LABS
by Phone on 8/1/67

- The response during a shadow period was considered (earth emission only)
- The unit was body-mounted with a perfectly insulated wall between the spacecraft and IHFSU.
- Radiant interchange between the thermoelectric units and the surface of the heat sink was neglected.
- The properties of the thermoelectric units were temperature dependent while those of the heat sink were constant with temperature.
- The heat input to the sample plate was 2 watts constant and 0 watts during earth shadow.

A schematic of the IHFSU thermal model is shown in Figure 2-3. This model consists of

6 2 stage thermoelectric modules
1 aluminum base or heat sink
32 conduction resistors
59 nodes (capacitors)
35 radiation resistors

The basic transient heat transfer relationship which this program uses is given by

$$T_{k,\theta+\Delta\theta} = \frac{\Delta\theta}{C_k}\left[\sum_j \frac{T_{j,\theta} - T_{k,\theta}}{R_j} + \delta_k\right] + T_{k,\theta}$$

where

$T_{j,\theta}$ = temperature at time θ of any arbitrary node j. connected to node k by a resistor R_j
R_j = resistor connecting nodes j and k
Tk, = temperature of node k at time
$T_{k,\theta+\Delta\theta}$ = temperature of node k after time increment $\Delta\theta$

C_k = capacity of node k

q_k = arbitrary heat input into node k

The arbitrary heat inputs are given by the equations for the thermoelectric unit given in Section 2.1 or by the environment of the 300 n.m. orbit. The thermo-physical properties for the aluminum base plate utilized are:

density = 172.8 Lbs/ft^3
thermal conductivity = 70 BTU/hr-ft-^oF
specific heat = 0.23 BTU/Lb - ^oF

The values for the orbital environment are:

Solar irradiance = 442 BTU/ft^2
Reflected solar flux = 152 BTU/ft^2 -hr
Earth emission = 70 BTU/ft^2-hr

The thermo-optical characteristics for Z-93 and aluminized H-film used in this analysis were: for Z-93; α =0.16, ϵ =0.92 and H-film; α =0.09, ϵ =0.8.

The values for base plate thickness and radiating/absorbing area and number of upper and lower thermoelectric couples varied on each run for the parametric analysis. The temperatures for nodes 9 and 39 (see Figure 2-4) the base plate and sample plate temperatures respectively were plotted versus time. Also the power inputs for nodes 36 and 37 were plotted to give the power requirements for the lower and upper modules, respectively.

A detailed description of the computer program used for this thermal analysis is geven in Appendix I.

2.4 RESULTS OF PARAMETRIC THERMAL ANALYSIS

The results of the parametric thermal analysis were utilized to determine the thermal design of the IHFSU.

Figures 2-4 through 2-6 present the sample plate and base plate temperature variations with time for 31, 20, and 15 lower thermoelectric couples. The number of upper module couples was held at 15 couples as a result of steady-state thermal analysis. It was found from this analysis that the number of upper couples did not contribute significantly to the total power requirements of the unit.

Figures 2-4 through 2-6 are shown for a base plate coating of Z-93 and an illumination condition of full sun, earth and albedo heat fluxes. Figure 2-6 shows the results for an incident flux of earth only (earth shadow condition). It can be seen that the lower temperature capability of the unit is increased (decrease in sample plate temperature) by 12°K when operating in the shadow period of the orbit. Figures 2-8 and 2-9 show the power requirements for the 15 upper and lower couple arrangement. A comparison of power requirements for a sample plate temperature of 200°K show only a 1.5 watt decrease in power in going from full illumination to shadow conditions.

A comparison of the thermo-optical coatings can be made by considering the results shown in Figures 2-4 and 2-10 shows the results for aluminized H-film, full sun, earth and albedo heat fluxes and the 31 lower and 15 upper couple configuration. These results show that the coating properties of the H-film do not significantly increase the lower temperature capability of the sample plate. Thus Z-93 is recommended for the IHFSU, because of the ease of application as compared with the aluminized H-film.

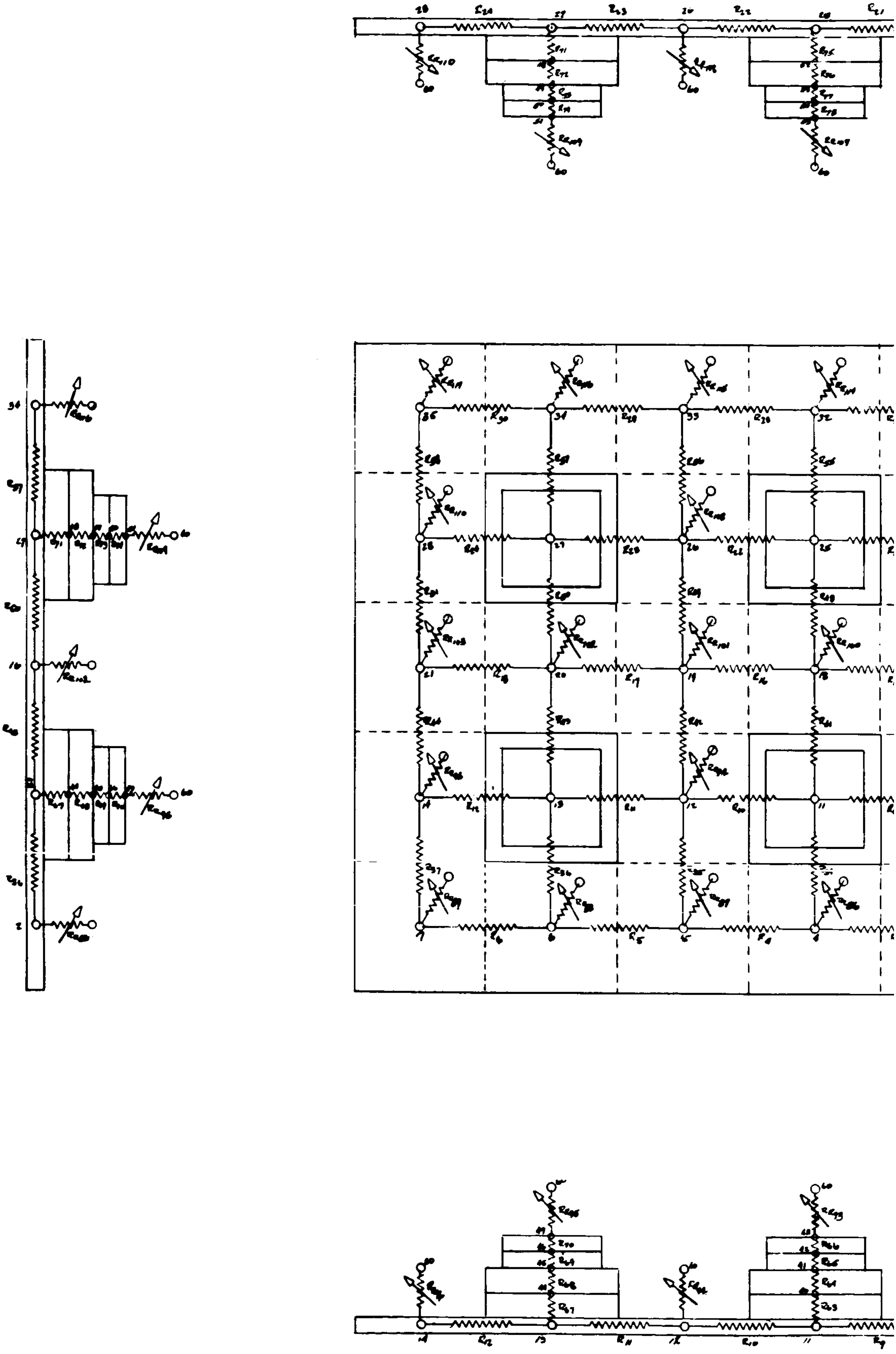

THERMAL M

Fig 2-B-A

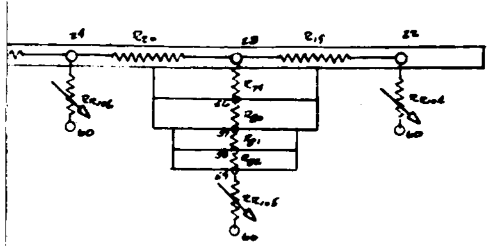

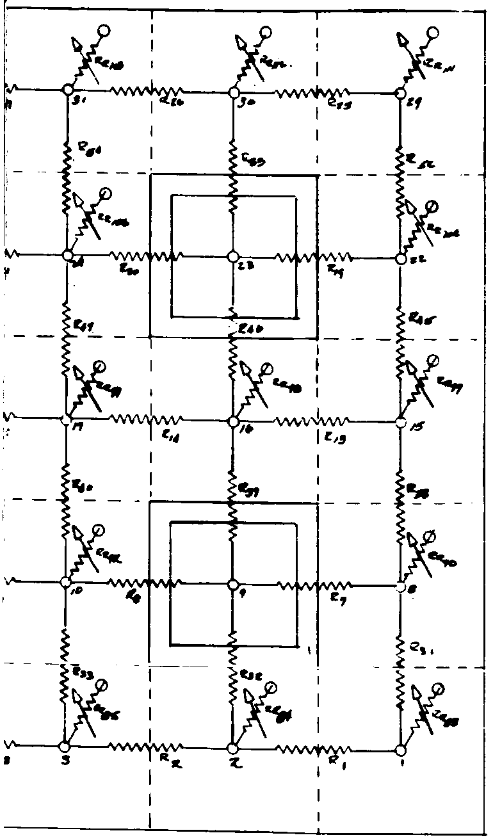

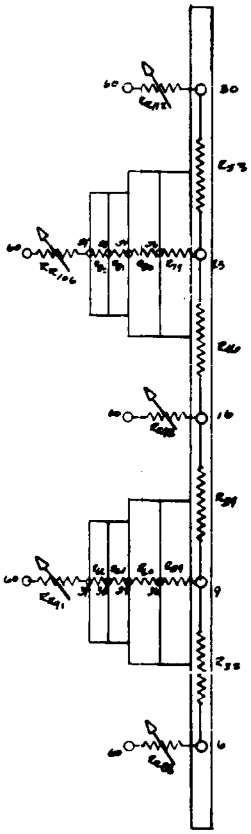

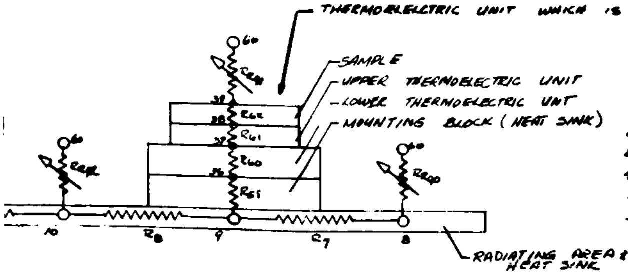

60 NODES (CAPACITORS)
82 CONDUCTION RESISTORS
41 RADIATION RESISTORS
29 EQUAL RADIATING AREAS (BODY-MOUNTED)
35 EQUAL RADIATING AREAS (BOOM-MOUNTED)
RADIATION RESISTORS 118-123 ARE ZERO FOR BODY-MOUNTED CONFIGURATION

NODE #60 = -460 °F

DEL OF ISOTHERMAL HEAT FLUX SENCING UNIT
RON CANNIZZARO 7/21/67

Figure 2-3 - B

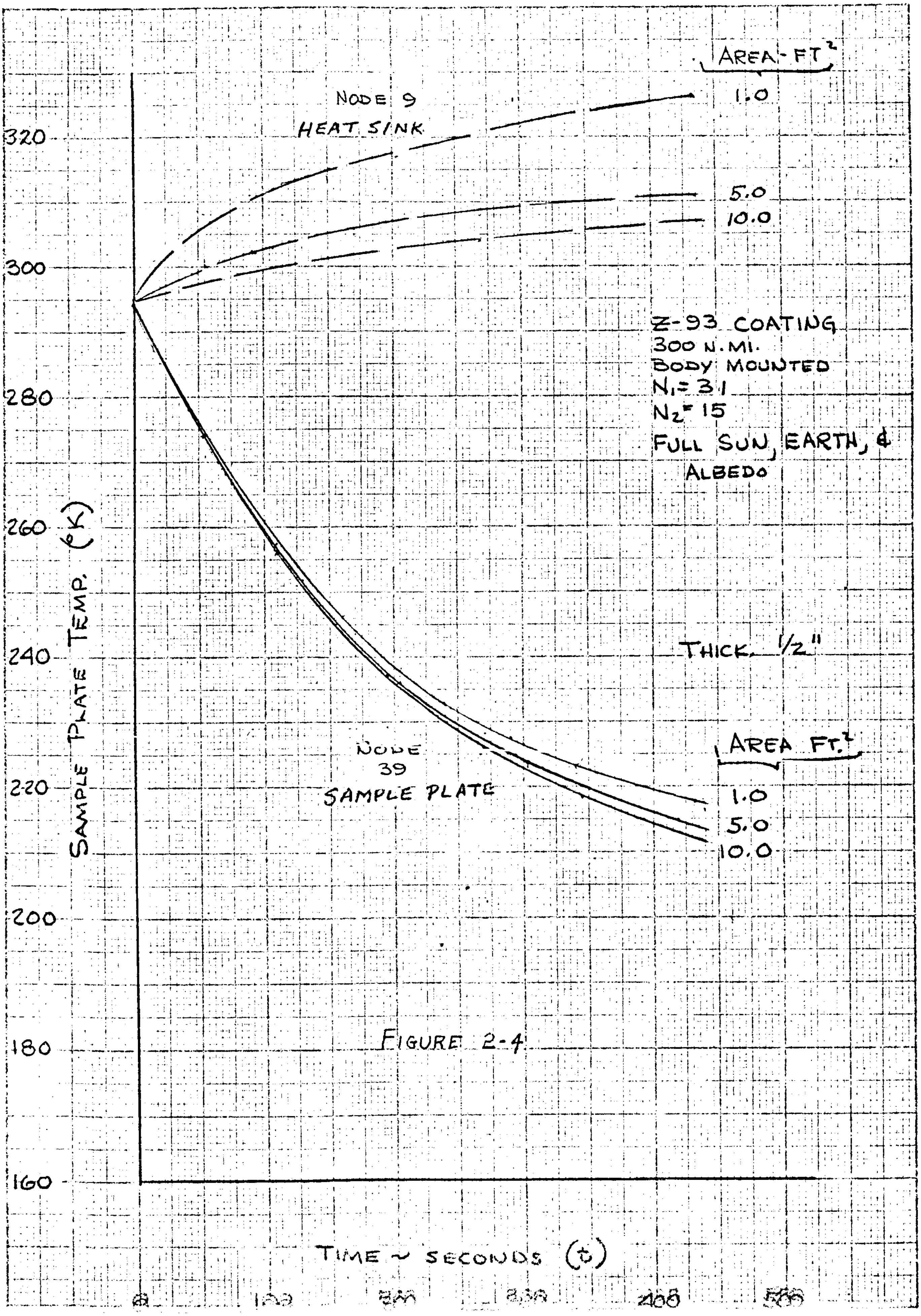
AREA - FT^2
1.0
5.0
10.0
NODE 9
HEAT SINK
320
300
280
260
240
220
200
180
160
Z-93 COATING
300 N.MI.
BODY MOUNTED
N_1 = 31
N_2 = 15
FULL SUN, EARTH, & ALBEDO
THICK. 1/2"
AREA FT.^{2}
1.0
5.0
10.0
NODE 39
SAMPLE PLATE
SAMPLE PLATE TEMP. (°K)
TIME ~ SECONDS (t)
0
100
200
300
400
500

FIGURE 2-4

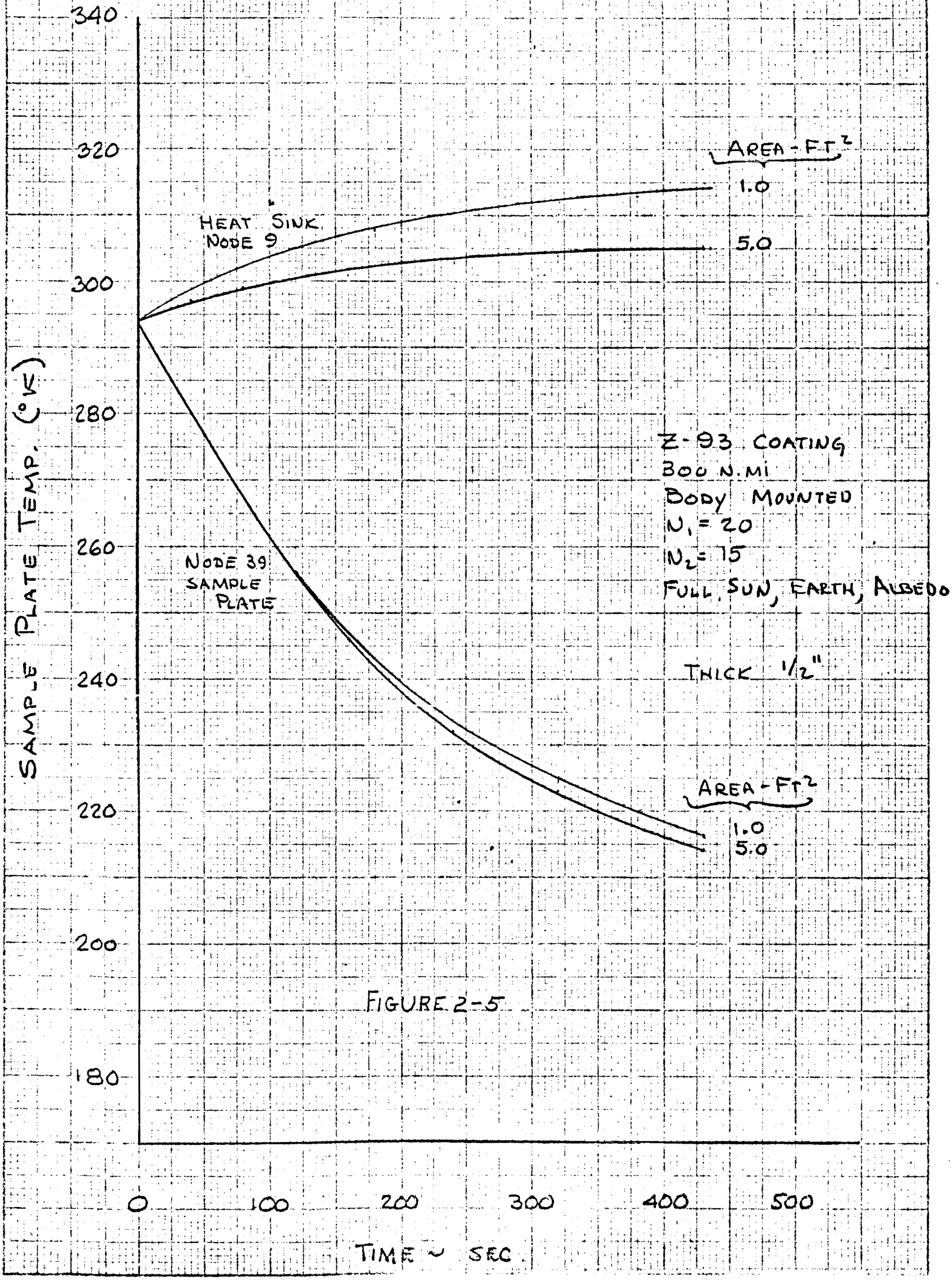
340
320
300
280
260
240
220
200
180
SAMPLE PLATE TEMP. (°K)
0
100
200
300
400
500
TIME ~ SEC
AREA - FT²
1.0
5.0
HEAT SINK
NODE 9
NODE 39
SAMPLE
PLATE
AREA - FT²
1.0
5.0
Z-93 COATING
300 N.MI
BODY MOUNTED
N₁ = 20
N₂ = 15
FULL, SUN, EARTH, ALBEDO
THICK 1/2"

FIGURE 2-5

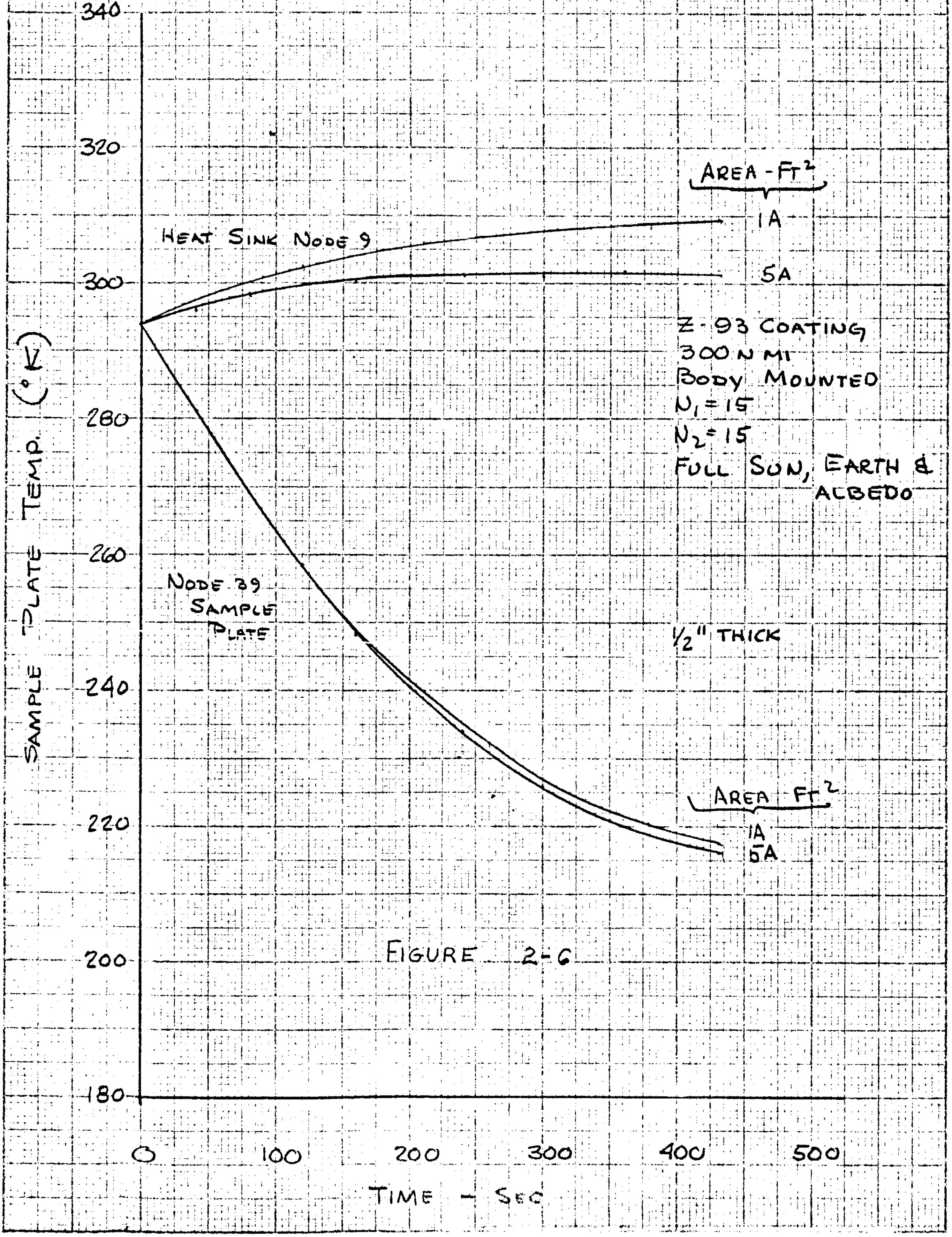

340
320
300
280
260
240
220
200
180
SAMPLE PLATE TEMP. (°K)
0
100
200
300
400
500
TIME – SEC
HEAT SINK NODE 9
AREA - FT^2
1A
5A
Z-93 COATING
300 N MI
BODY MOUNTED
$N_1 = 15$
$N_2 = 15$
FULL SUN, EARTH & ALBEDO
NODE 39 SAMPLE PLATE
½" THICK
AREA FT^2
1A
5A

FIGURE 2-6

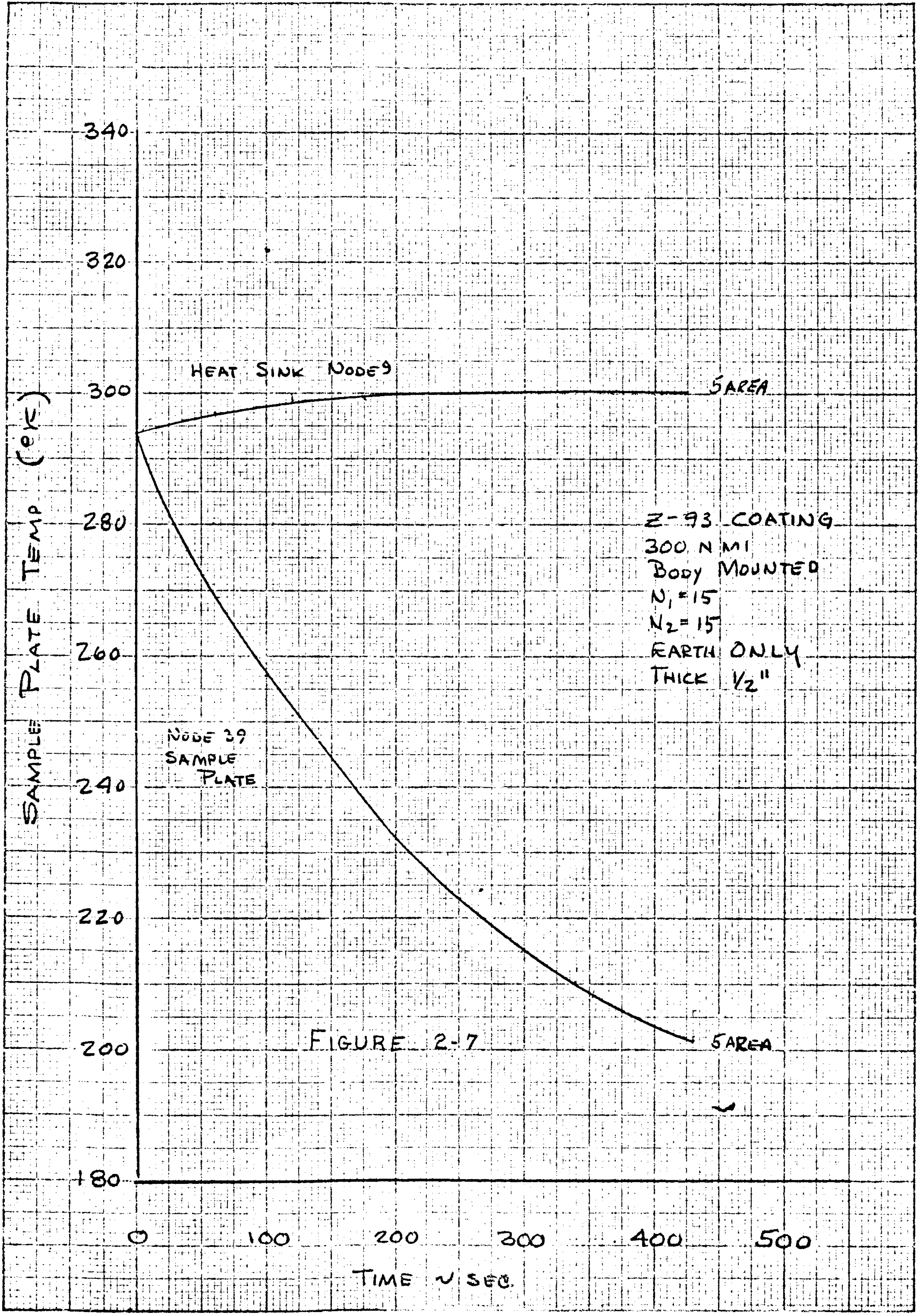

340
320
300
280
260
240
220
200
180
SAMPLE PLATE TEMP (°K)
0
100
200
300
400
500
TIME ~ SEC.
HEAT SINK NODE 9
5 AREA
NODE 39 SAMPLE PLATE
5 AREA
Z-93 COATING
300 N MI
BODY MOUNTED
N₁ = 15
N₂ = 15
EARTH ONLY
THICK 1/2"

FIGURE 2-7

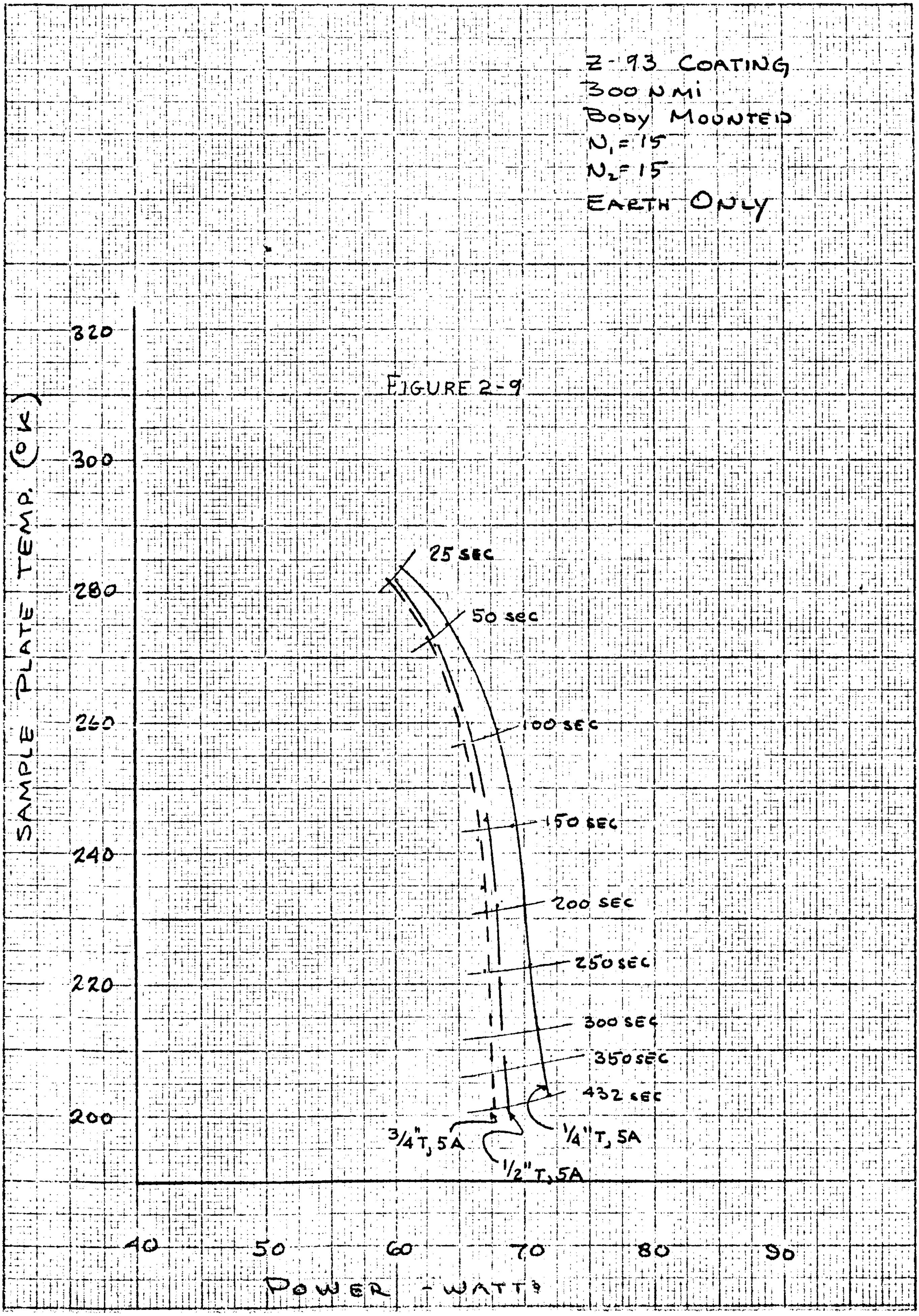

FIGURE 2-9

Z-93 COATING
300 N MI
BODY MOUNTED
$N_1 = 15$
$N_2 = 15$
EARTH ONLY

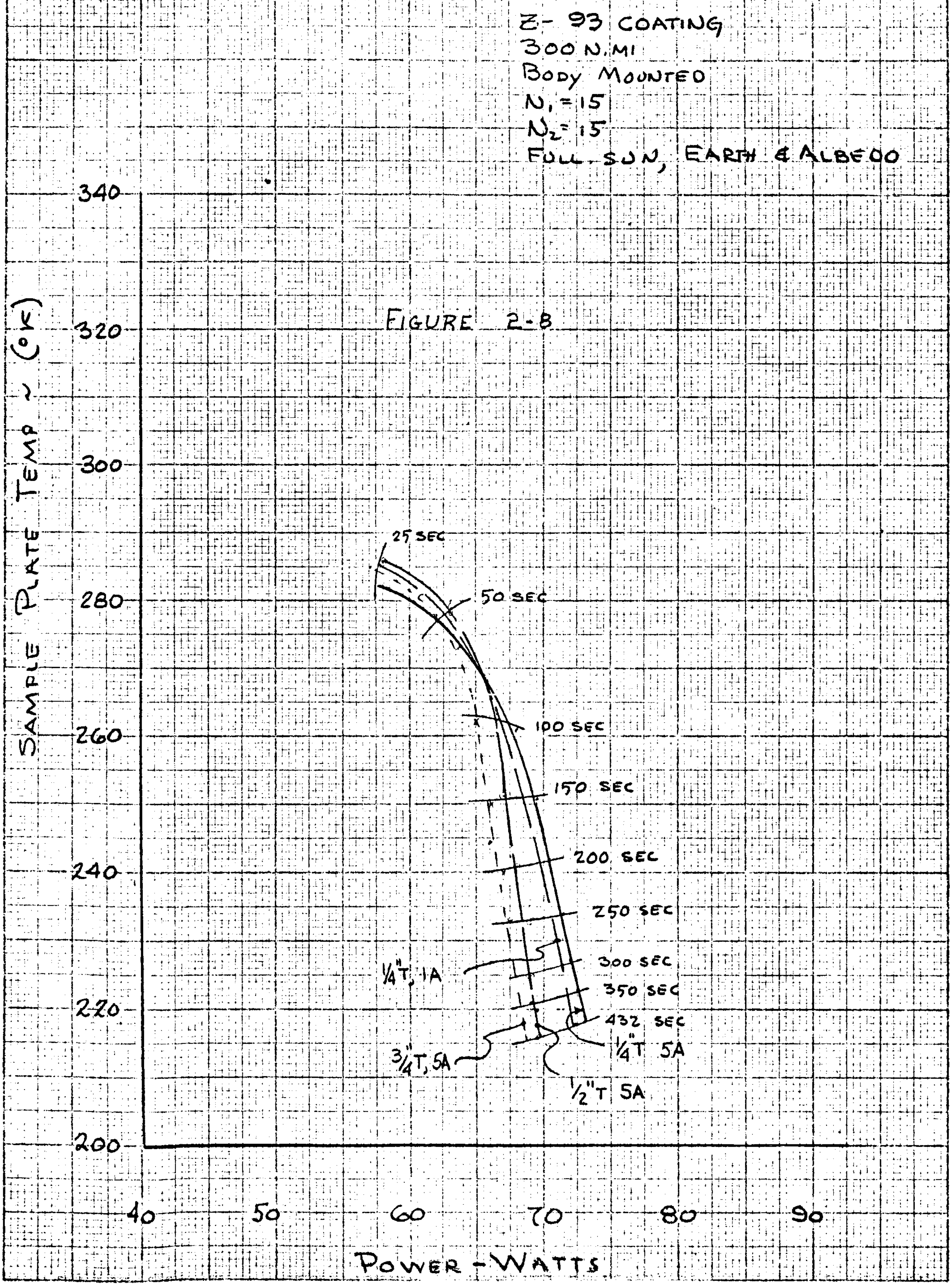

FIGURE 2-8

Z-93 COATING
300 N.MI
BODY MOUNTED
$N_1 = 15$
$N_2 = 15$
FULL SUN, EARTH & ALBEDO
SAMPLE PLATE TEMP ~ (°K)
340
320
300
280
260
240
220
200
40
50
60
70
80
90
POWER - WATTS
25 SEC
50 SEC
100 SEC
150 SEC
200 SEC
250 SEC
300 SEC
350 SEC
432 SEC
1/4"T, 1A
1/4"T 5A
3/4"T, 5A
1/2"T 5A

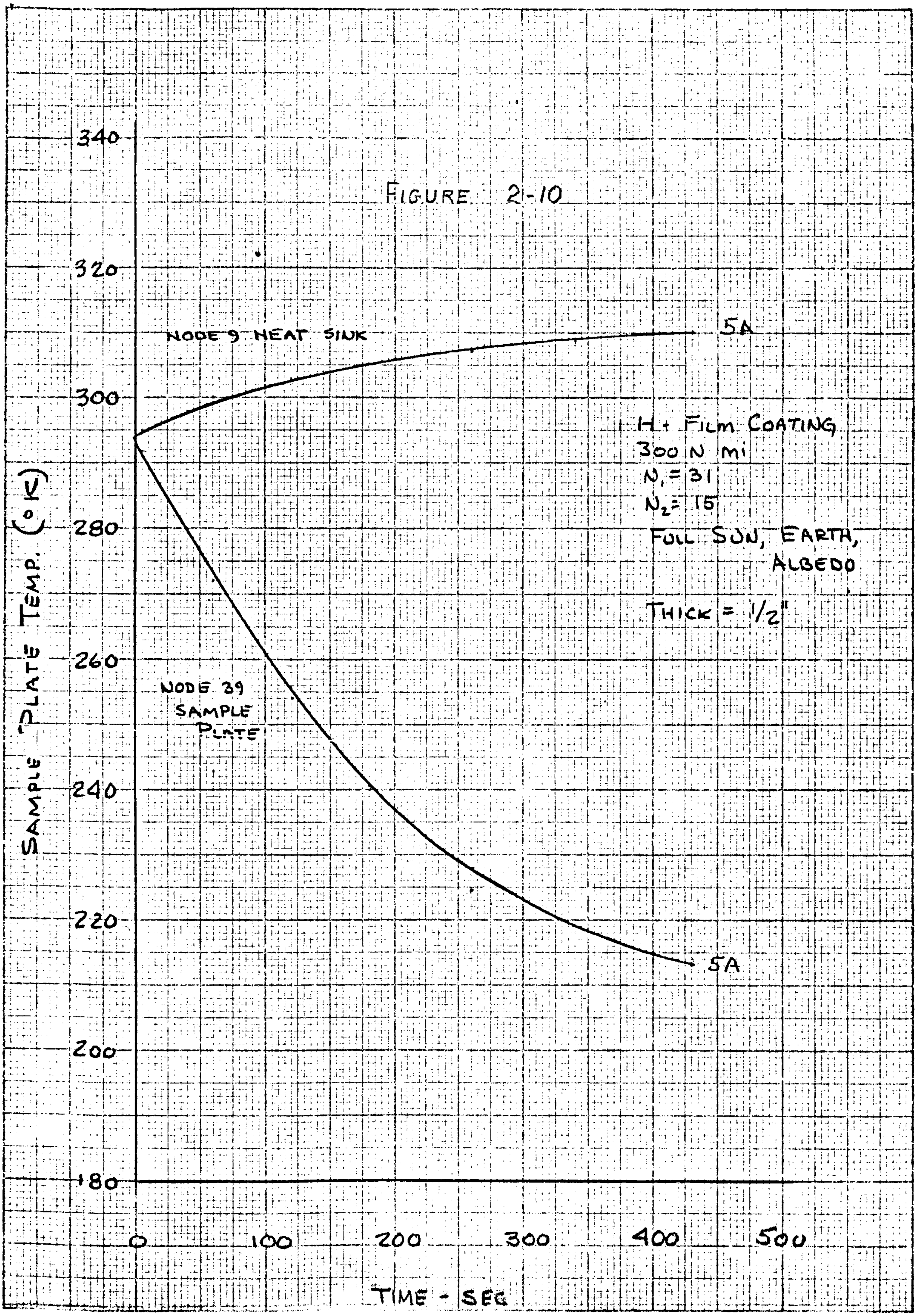
FIGURE 2-10
340
320
300
280
260
240
220
200
180
SAMPLE PLATE TEMP. (°K)
NODE 9 HEAT SINK
5A
H+ FILM COATING
300 N MI
$N_1 = 31$
$N_2 = 15$
FULL SUN, EARTH, ALBEDO
THICK = 1/2"
NODE 39 SAMPLE PLATE
5A
0
100
200
300
400
500
TIME - SEC

The results of this parametric thermal analysis show that the final configuration for the base plate, number of upper and lower couples and, power input and thermoelectric element size are as follows:

Heat sink area = 1.5 ft.^{2}
Heat sink thickness = 0.5 inches
Heat sink material is aluminum
Number of lower couples = 15 (unit # CP 5-31-10)
Number of upper couples = 10 (unit # CP 2-31-10)
Thermo--optical coating is Z-93
Total power requirement = 70 watts
Sample plate temperature = 200° K

During the course of the program it was mutually decided to increase the lower sample temperature to 250°K in order to decrease the total power requirements of the IHFSU. This resulted in a reduction in the number of lower thermoelectric elements to 10 (Unit # CP2-31-10). This reduction resulted in a 50% decrease in power from approximately 70 watts to 35 watts.

A further analysis showed that the IHFSU power supply design could be made more efficient by lowering the 4:1 current level ratio of the two types of modules. A thermal analysis was performed using Melcor unit Nbr CP2-31-06 with 31 couples for the lower module. This unit has an I_{opt} of 14 amps compared with the I_{opt} of 36 amps of the CP5-31-10 unit. The results of the analysis showed a 3°K increase in sample plate configuration compared with the previous configuration, also that the 250°K sample plate temperature is well within the capability of this unit. The final thermoelectric module design is:

	Number of Couples	I_{opt}(amps)	Melcor No.
Lower Unit	31	14	CP2-31-06
Upper Unit	10	8.5	CP2-31-10

The total power required remains the same, ie. 35 to 40 watts.

Figure 2-11 shows the results of a thermal gradient analysis of the base plate. This analysis was performed to determine the affect of the hot junction temperature increase at the other thermoelectric-base plate interfaces. These results shown that for an area of 1.0 ft.^{2}, and a thickness of 0.5 inches, the temperature difference at the thermoelectric-base plate interface at a distance of 2.5 inches is 12.5 ^{o}K at 3.96 min. and 17^{o}K at 7.2 min. Therefore, the flat plate plate concept shows a significant temperature rise at the other thermoelectric units.

The final design for the IHFSU base plate is, therefore, a tapered plate, rather than the flat plate assumed for the thermal design. The tapered design was selected so that the thermal mass of the plate would be lumped directly below the thermoelectric units where it is required to dampen thermal gradients. The base plate area surrounding the thermoelectrics only serves to radiate the incident heat fluxes so that the tapered plate was found to be a more acceptable thermal design.

The mounting blocks used between the base plate and lower module, between the lower and upper module and for the sample plate were changed to copper, so that the thermal gradients across these plates would be minimal. The thermal conductivity of copper is about 3 times that of aluminum and the thermal mass is essentially the same (thermal response time is therefore not affected by the change).

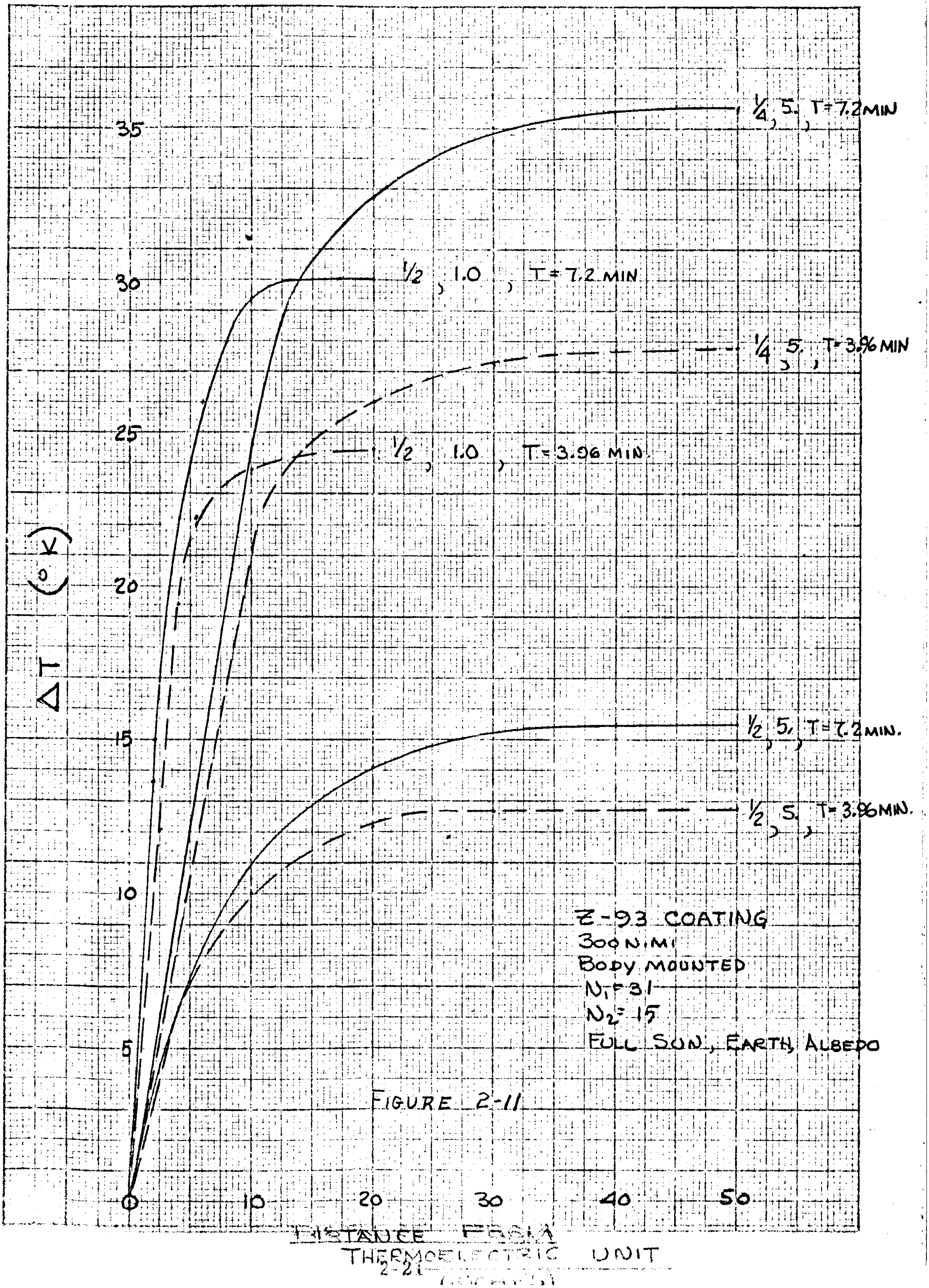
ΔT (°K)
35
30
25
20
15
10
5
0
10
20
30
40
50
1/4, 5, T=7.2 MIN
1/2, 1.0, T=7.2 MIN
1/4, 5, T=3.96 MIN
1/2, 1.0, T=3.96 MIN
1/2, 5, T=7.2 MIN.
1/2, 5, T=3.96 MIN.
Z-93 COATING
300 N.MI
BODY MOUNTED
N1=31
N2=15
FULL SUN, EARTH, ALBEDO
DISTANCE FROM THERMOELECTRIC UNIT (INCHES)

FIGURE 2-11

2.5 UTILIZATION OF EXPERIMENT DATA

This analysis presents a technique for utilization of the Isothermal Heat Flux Sensing Unit as a radiometer and as a thermo-optical property measurement device. This analysis can be readily programmed for a digital computer so that the data handling can be done efficiently.

The heat flux sensing unit must serve as a radiometer so that the validity of the experiment will be independent of the spacecraft altitude. This can be done by selecting two of the six samples as known, stable standards. Three such possible coatings are: a razor blade surface ($\alpha/\epsilon = 1.0/1.0$), polished gold ($\alpha/\epsilon = 0.3/0.03 = 10$) and a white procelain enamel ($\alpha/\epsilon = 0.25/0.93$). The two standards selected for the flight unit must necessarily be different standard emittances and/or different selected test temperatures.

As the unit is cycled through the readout sequence of the six samples, temperature and thermoelectric performance data will be obtained. The data of significance occurs at the point where all sample temperatures have achieved their preselected levels. Steady-state conditions will then prevail. The thermoelectric heat pumped at this time to or from the two standards will uniquely determine the incident solar, albedo and earth heat fluxes at that point in the spacecraft orbit that were received by all of the samples.

This process is repeated at another point in the orbit permitting the calculation of the incident heat fluxes at that time. The data taken at these two points for the four unknown samples will then uniquely determine their absorptances and emittances provided that at least one of the two readouts occurs during the daytime part of the orbit. The following analysis derives the relations to obtain these properties from the flight data.

A heat balance performed on a typical sample at the time when the preselected sample temperature is achieved gives:

$$\left.\begin{aligned} &\epsilon_s A_s \left(\sigma T_s^4 - \sigma T_{s_{SINK}}^4 \right) + Q_{PUMPED} = 0 \\ &\sigma T_{s_{SINK}}^4 = \left(\frac{\alpha}{\epsilon} \right)_s \left(S_i + A_i \right)_s + E_{is} \end{aligned}\right\} \quad (1)$$

where

T_s - sample temperature (preselected), ^oR

$T_{s_{sink}}$ - radiation sink temperature at sample, ^oR

Q_{pumped} - net thermoelectric heat pumped (out >0, in <0) BTU/hr

ϵ_s - sample emittance

$(\alpha/\epsilon)_s$ - sample absorptance/emittance ratio

A_s - sample area, ft.^{2}

S_{is} - incident solar flux to sample, BTU/hr - ft^2

A_{is} - incident albedo flux to sample, BTU/hr - ft^2

E_{is} - incident earth flux to sample, BTU/hr - ft^2

σ - Stefan-Boltzmann constant = 0.17139×10^{-8} BTU/hr -ft^2 $^oR^4$

Direct interactions between the sample and the upper heat sink are not included because the sink temperature and sample temperature will both be at their preselected temperature.

Let the subscript K_1 and K_2 denote the two known samples. Then for the first known, equations (1) may be solved for the radiation sink flux in terms of the known and measured quantitites:

$$\sigma T_{K_{1S}}^4 = \frac{\epsilon_{K_1} A_{K_1} \sigma T_{K_1}^4 + Q_{K_1}}{\epsilon_{K_1} A_{K_1}} = \left(\frac{\alpha}{\epsilon}\right)_{K_1} (S_i + A_i)_{K_1} + E_{i_{K_1}} \qquad (2)$$

Similarly, the second known sample's radiation sink flux is:

$$\sigma T_{K_{2S}}^4 = \frac{\epsilon_{K_2} A_{K_2} \sigma T_{K_2}^4 + Q_{K_2}}{\epsilon_{K_2} A_{K_2}} = \left(\frac{\alpha}{\epsilon}\right)_{K_2} (S_i + A_i)_{K_2} + E_{i_{K_2}} \qquad (3)$$

But the measurement of Q_{K_1}, Q_{K_2}, T_{K_1} and T_{K_2} occur at practically the same point in the orbit, therefore, the incident solar, albedo and earth fluxes are virtually identical for all the samples aboard a non-spinning spacecraft. So:

$$(S_i + A_i)_{K_1} = (S_i + A_i)_{K_2} = S_i + A_i$$

$$E_{i_{K_1}} = E_{i_{K_2}} = E_i$$

Let:

$$Z = S_i + A_i$$

$$I = E_i$$

$$B_{K_S} = \sigma T_{K_S}^4$$

Equations (2) and (3) can be written as:

$$B_{K_{1S}} = \left(\frac{\alpha}{\epsilon}\right)_{K_1} Z + I$$

$$B_{K_{2S}} = \left(\frac{\alpha}{\epsilon}\right)_{K_2} Z + I$$

Solving (4) for Z and I in terms of the calulated values of sample sink fluxes and the known α/ϵ ratio:

$$Z = \frac{B_{K_{1S}} - B_{K_{2S}}}{\left(\frac{\alpha}{\epsilon}\right)_{K_1} - \left(\frac{\alpha}{\epsilon}\right)_{K_2}} = S_i + A_i \qquad (5)$$

$$I = \frac{\left(\frac{\alpha}{\epsilon}\right)_{k_1} B_{k_2 s} - \left(\frac{\alpha}{\epsilon}\right)_{k_2} B_{k_2 s}}{(\alpha/\epsilon)_{k_1} - (\alpha/\epsilon)_{k_2}} = E_i \qquad (5)$$

Where the numerical values of $B_{k_j s}$ are given by (2) and (3) as:

$$B_{k_j s} = \frac{\epsilon_{k_j} A_{k_j} \sigma T_{k_j}^4 + Q_{k_j}}{\epsilon_{k_j} A_{k_j}}, \quad j = 1, 2 \qquad (5a)$$

Let the subscript x denote the unknown samples. Aheat balance on such a sample will have the same form as the one on the typical known sample given by (1):

$$\left.\begin{aligned} \epsilon_x A_x (\sigma T_x^4 - \sigma T_{x_s}^4) + Q_x &= 0 \\ \sigma T_{x_s}^4 = \left(\frac{\alpha}{\epsilon}\right)_x (S_i + A_i) + E_i &= \left(\frac{\alpha}{\epsilon}\right) Z + I \end{aligned}\right\} \qquad (6)$$

Eliminating $\sigma T_{x_s}^4$ from (6), we obtain:

$$\epsilon_x A_x (\sigma T_x^4 - I) - \alpha_x A_x Z = -Q_x \qquad (7)$$

To find the unknown values of α_x and ϵ_x, read out of the unit is required at two points in the orbit and equation (7) is written for those two points using the values of Z and I found from (5) at each of these two points. Then (7) gives the system:

$$\begin{aligned} u_1 \epsilon_x - v_1 \alpha_x &= -W_1 \\ u_2 \epsilon_x - v_2 \alpha_x &= -W_2 \end{aligned}$$

where the numerical subscripts distinguish the two orbit readout points and:

$$\left.\begin{aligned} u_j &= A_x\left(\sigma T_x^4 - I\right)_j \\ v_j &= A_x Z_j \\ w_j &= Q_{x_j} \end{aligned}\right\} \quad j = 1, 2$$

Solving (8) for α_x and ϵ_x gives:

$$\epsilon_x = \frac{\begin{vmatrix} -w_1 & -v_1 \\ -w_2 & -v_2 \end{vmatrix}}{\begin{vmatrix} u_1 & -v_1 \\ u_2 & -v_2 \end{vmatrix}} = \frac{w_2 v_1 - w_1 v_2}{u_1 v_2 - u_2 v_1}$$

$$\alpha_x = \frac{\begin{vmatrix} u_1 & -w_1 \\ u_2 & -w_2 \end{vmatrix}}{\begin{vmatrix} u_1 & -v_1 \\ u_2 & -v_2 \end{vmatrix}} = \frac{u_1 w_2 - u_2 w_1}{u_1 v_2 - u_2 v_1}$$

Replacing u, v, and w by their equivalents, we obtain:

$$\left.\begin{aligned} \epsilon_x &= \frac{Q_{x_2} Z_1 - Q_{x_1} Z_2}{A_x\left[\left(\sigma T_{x_1}^4 - I\right)_1 Z_2 - \left(\sigma T_{x_2}^4 - I\right)_2 Z_1\right]} \\ \alpha_x &= \frac{\left(\sigma T_{x_1}^4 - I\right)_1 Q_{x_2} - \left(\sigma T_{x_2}^4 - I\right)_2 Q_{x_1}}{A_x\left[\left(\sigma T_{x_1}^4 - I\right)_1 Z_2 - \left(\sigma T_{x_2}^4 - I\right)_2 Z_1\right]} \\ \left(\frac{\alpha}{\epsilon}\right)_x &= \frac{\left(\sigma T_{x_1}^4 - I\right)_1 Q_{x_2} - \left(\sigma T_{x_2}^4 - I\right)_2 Q_{x_1}}{Q_{x_2} Z_1 - Q_{x_1} Z_2} \end{aligned}\right\} \quad (9)$$

where Z_1, Z_2, I_1 and I_2 are the incident solar, albedo and earth heat fluxes at readout points 1 and 2 in the orbit, as determined by equations (5) and (5a) in terms of the two known sample temperatures, thermoelectric heat pumped at these at those readout points and their thermo-optical properties.

The net thermoelectric heat pumped is calculated as the difference between the Peltier and one half of the I^2R effects plus conduction and Thomson effects. The conduction and Thomson effects are dependent on the thermal gradient across the upper thermoelectric unit and tend to zero as the gradient tends to zero. The net heat pumped when the sample is stabilized at its preselected temperature is simply:

$$Q_x = \alpha I T_x - \frac{1}{2} I^2 R$$

The quantities R and α have known values at T_x for the thermoelectric device so that the current (I) readout, when the sample and upper heat sink temperatures equal the preselected T_x, enables the computation of Q_x.

The effects of the thermal gradient on the Q_x are shown in Figure 2-12. This figure presents the error in heat flux measurement versus ΔT across the thermoelectric unit. Normally however; the T_x, ΔT and thermal conductance are fairly well known and the Q_x can be calculated from the relation:

$$Q_x = K I T_x - \frac{1}{2} I^2 R - K \Delta T$$

If this flux is not accounted for an error in reading Q_x will occur as shown in Figure 2-12.

FIGURE 2-12

% CONDUCTANCE LOSS IN THERMOELECTRIC HEAT PUMPED
AS A FUNCTION OF THE THERMAL GRADIENT

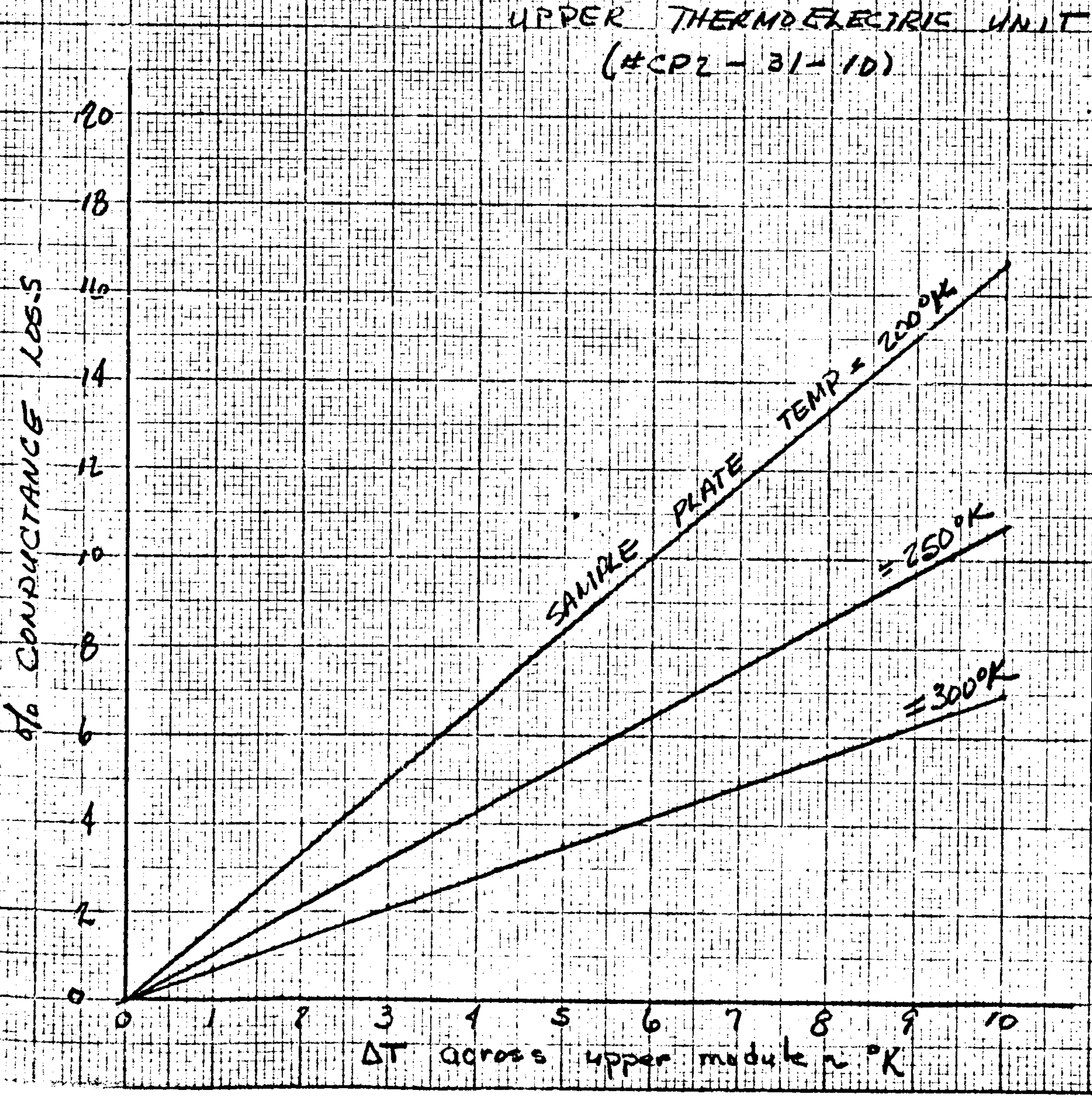

3.0 THEORY OF OPERATION

The IHFSU system as shown in Figure 3-1 consists of six thermoelectric modular assemblies with each array having an upper and lower thermoelectric element. Two identical servo systems are used to independently control the temperature of a single upper and lower modular assembly. Switching between the six arrays is under the control of the External Sequencer. Since only one sample is operated at any given time, the temperature sensors are commutated into a single bridge network in each servo system and power is gated out to the appropriate thermoelectric element.

Considering a single servo system, (both are identical) the temperature sensor (intimate contact with the thermoelectric element) and a series adjustment potentiometer are switched into a single active arm bridge network under command from the External Sequencer. At the same time this action causes power to be gated out to the corresponding thermoelectric element.

The bridge having been preset to a given temperature (by adjusting the switched series potentiometer) is imbalanced when the preset temperature is different than the thermoelectric temperature. The resulting difference voltage generated by the bridge is amplified by two series differential amplifiers, and inverted by a third amplifier. The outputs from the second and third amplifiers are identical in magnitude but opposite in sign. Each of these signals form one of two inputs to two comparator circuits. The second input to each comparator originates from a common linear sweep generator.

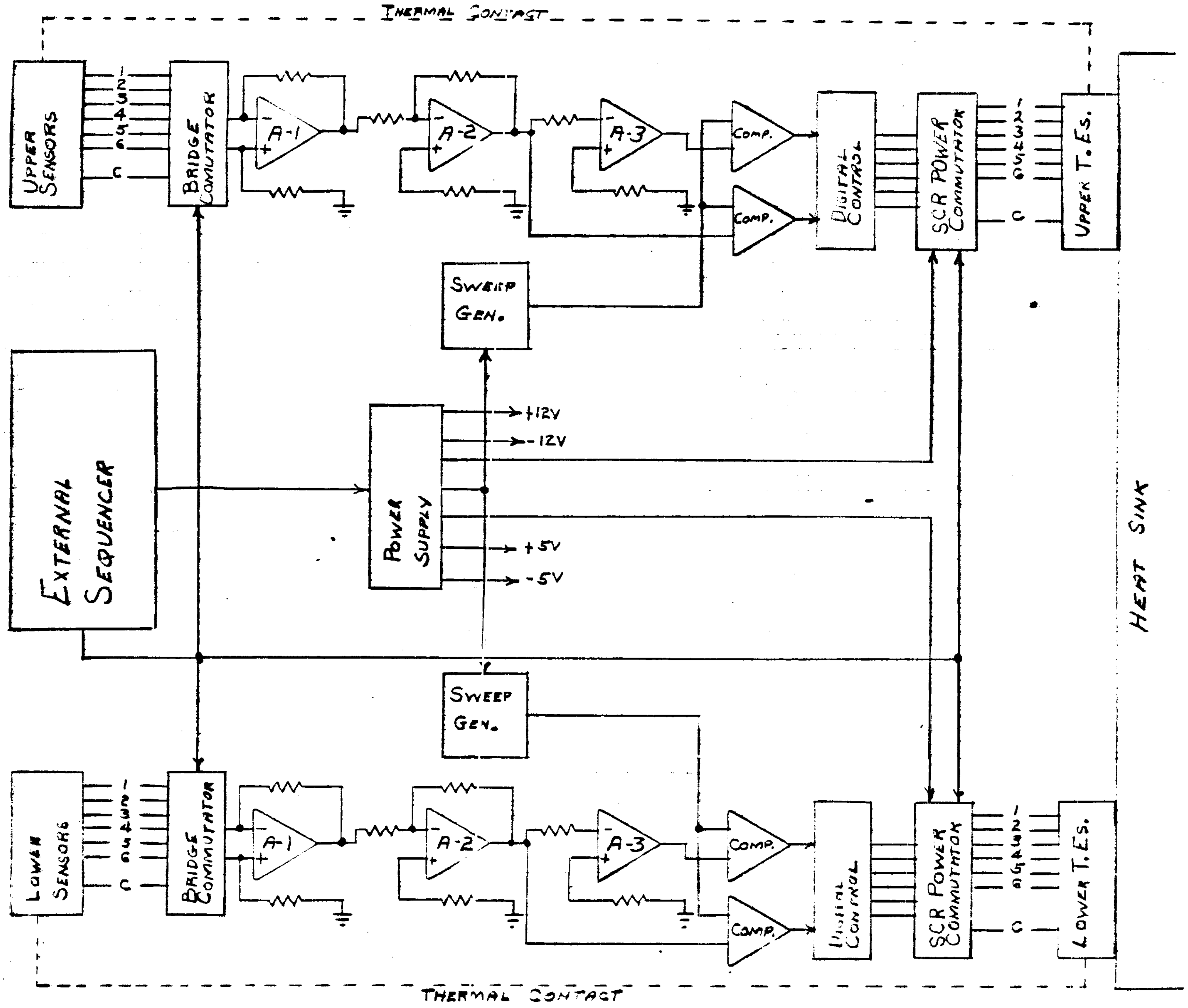

FIGURE 3-1 SYSTEM BLOCK DIAGRAM

As shown in the system block diagram, the inputs to the linear sweep generators come from the power supply. The power supply in this case is a DC to AC inverter with several AC output windings. Rectified components of these AC outputs (square waves) are used to drive the thermoelectric elements and several DC voltage regulators. The regulators in turn supply power to the above described sensor circuitry. The AC output signals are also used to drive the linear sweep generator as shown in Figure 3-2. As can be seen from this figure, two square waves 180° out of phase and coherent with the DC to AC inverter are used to drive the sweep generator.

The output of the comparator circuits, (driven by the sensing amplifier circuits and the linear sweep generator) are used to direct either heating or cooling power to the thermoelectric element so as to change the temperature sensor resistance in a direction that tends to null the outputs of the two amplifiers. This is accomplished by detecting which comparator output changes state during half wave intervals. Since the amplifier inputs to the comparator circuit are opposite in sign except at null, one of the comparator circuits must change states. In actual operation, at the begining of the linear sweep period both comparator circuits are adjusted to have negative outputs, that is, the linear sweep voltage is more positive than either amplifier output. One of the two amplifiers will have a negative output when the bridge is imbalanced. Assuming imbalance, at some point along the linear sweep voltage output, the sum of the two comparator inputs will change from a positive to a negative voltage thereby changing the output of the comparator. The other comparator will not change state since both inputs are positive.

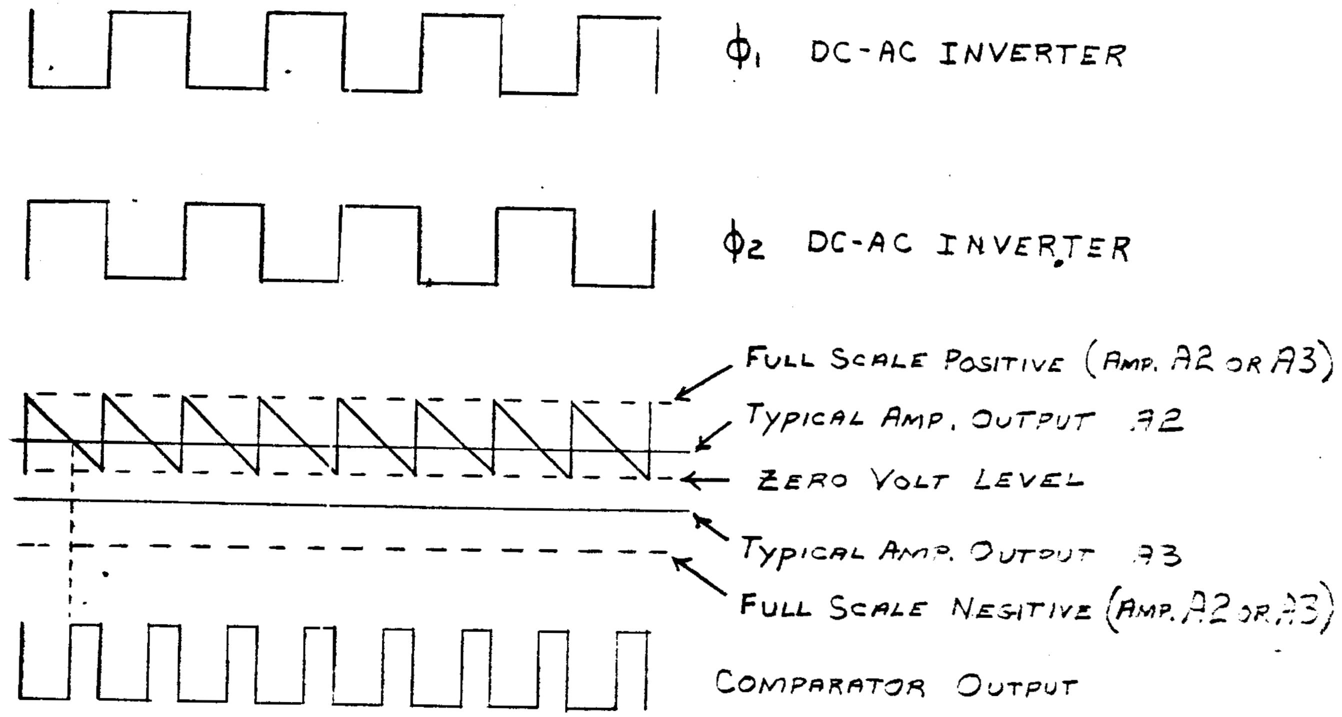

FIGURE 3-2
SWEEP GENERATOR TIMING DIAGRAM

The next block in the diagram after the comparator circuits is the digital control circuitry. Under control of the External Sequencer, these circuits direct the comparator outputs to the proper SCR power gating circuits. The transition of the comparator circuit is used to trigger the appropriate SCR which applies either heating or cooling power (direction of current flow) to the thermoelectric element under control. This is determined by the comparator which made a transition. Once the SCR is triggered the power remains on until the input AC voltage changes state, at which time the SCR reverse biases and is cut off. At the same time the sweep generator is reset and starts over and the process is repeated. Two phase power is used for cooling so that in this mode power is applied every half cycle. In the heating mode single phase power is used and the above described process is repeated every other half cycle which tends to match the more efficient heating capability to the cooling capability of the thermoelectric element.

The use of the linear sweep generator allows for proportional control of the power input to the thermoelectric elements. In this manner the power level, which is at a peak when the bridge network is imbalanced, is adjusted to a proportional level sufficient to maintain the preset temperature when the bridge approaches null.

The following paragraphs describe in detail the subsystems used to effect the above system.

3.1 HEAT SINK

The Heat Sink consists of an aluminum block which has the six thermoelectric module assemblies mounted on the upper side and access connectors mounted on the lower side. The six thermoelectric module assemblies are isolated from one another by fiberglass insulators covered with aluminized mylar tape.

3.1.1 Thermoelectric Modular Array

Figure 3-3 shows the two stage thermoelectric module assembly. Six such assemblies are used in the IHFSU system. Each assembly is a self contained unit with a removable copper sample plate. Four screws hold this plate to an upper copper heat sink to which the upper thermoelectric element is soldered. In addition this upper thermoelectric element is soldered to a middle copper heat sink. The lower thermoelectric element is also soldered to this middle heat sink and to a lower copper heat sink. The lower heat sink has a relatively large mass to provide good heat conduction away from the assembly. Screws are used to attach the lower heat sink to the large aluminum block providing for easy replacement of the module assemblies.

The upper thermoelectric elements in all module assemblies are model CP2-31-10 modified to 10 couples and the lower thermoelectric elements are model CP2-31-06. Both are manufactured by Melcor Inc.

The upper and lower heat sink solder connections were made by tining the two copper heat sinks and reheating them to the melting point of the solder. The thermoelectric units were attached while heat was being applied and then the copper plates were allowed to cool. The middle heat sink solder connections were more complicated since there was no practical way of applying heat to this middle plate once both thermoelectric elements

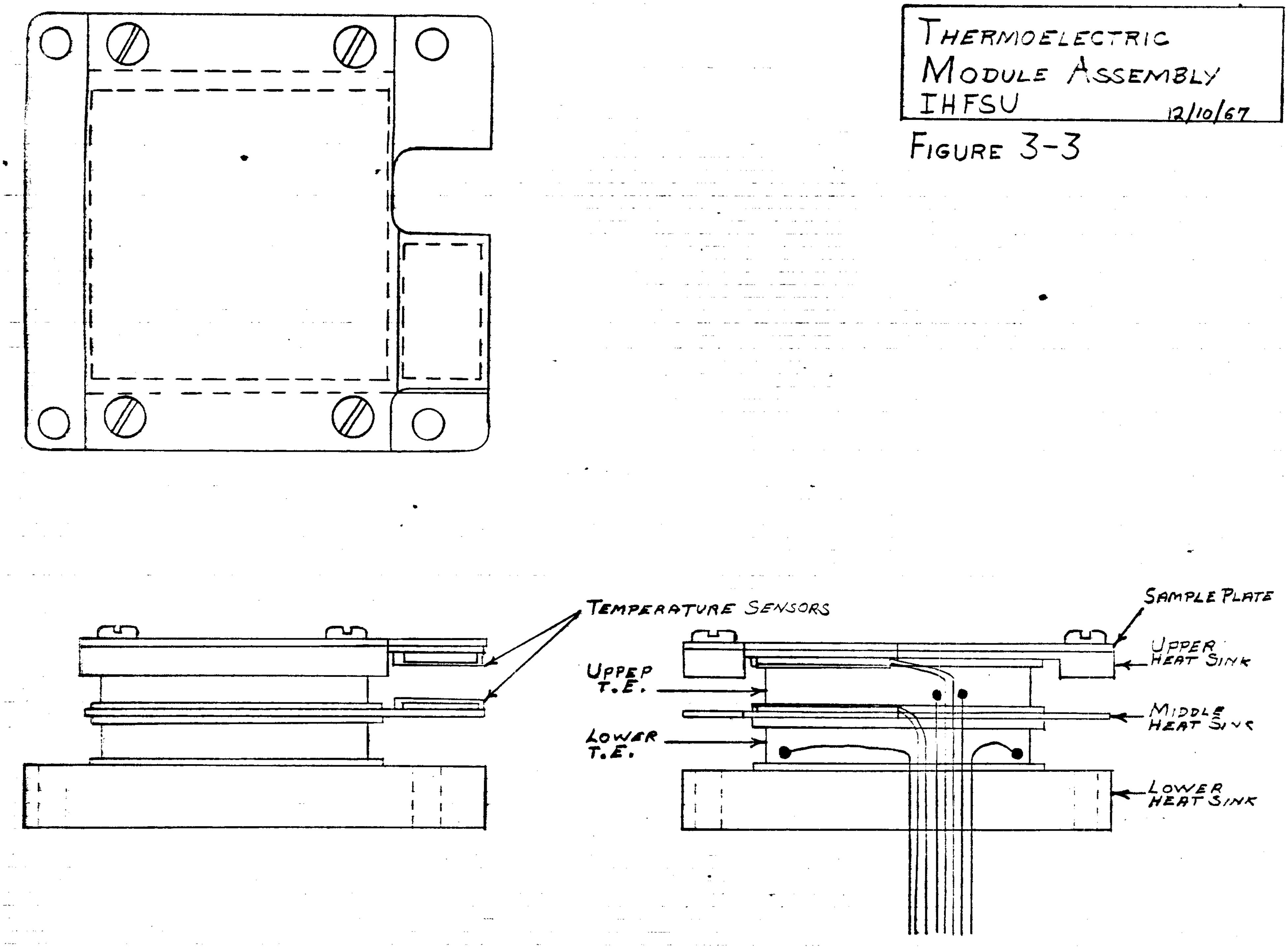

THERMOELECTRIC
MODULE ASSEMBLY
IHFSU 12/10/67

FIGURE 3-3

were positioned. To overcome this difficulty the middle heat sink copper plate was first tined with solder on both sides and allowed to cool. The upper and lower thermoelectric elements were position and clamped. A temperature sensor was placed on the middle heat sink and power was applied to the lower thermoelectric element so that the surface in contact with the middle heat sink was heated. To accomphish this, the closed loop servo system was used, as described at the begining of Section 5, and the temperature was bought to the melting point of the solder and held there before cooling. In this manner, the temperature of the middle heat sink was controlled precisly and no damage resulted to the thermoelectric units. The heating of these units is critical since the melting point of the indium solder used to make the bonds in only a few degrees lower then the melting point of the solder used to construct the thermoelectric units themselves.

As shown in Figure 3-3 the upper and lower temperature sensors are mounted on extrusions on the upper and middle heat sinks. The sensors used are nickle cadmium resistance thermomitors model #S1044B manufactured by Minco Products Inc. Their overall dimensions are 0.35" x 0.50" x 0.015" and the actual sensing area is 0.25" x 0.015". Their resistance vs temperature characteristics are given in tabular form in Section 4.

3.1.2 Aluminum Block

A large aluminum block is used as the heat sink for all the thermoelectric module assemblies. It has a flat upper surface which measures 16.15" x 14.62" of which the six thermoelectric module assemblies occupy a 5" x 4.25" space in the center. This leaves a radiating surface area of approximately 1.5 sq. ft.

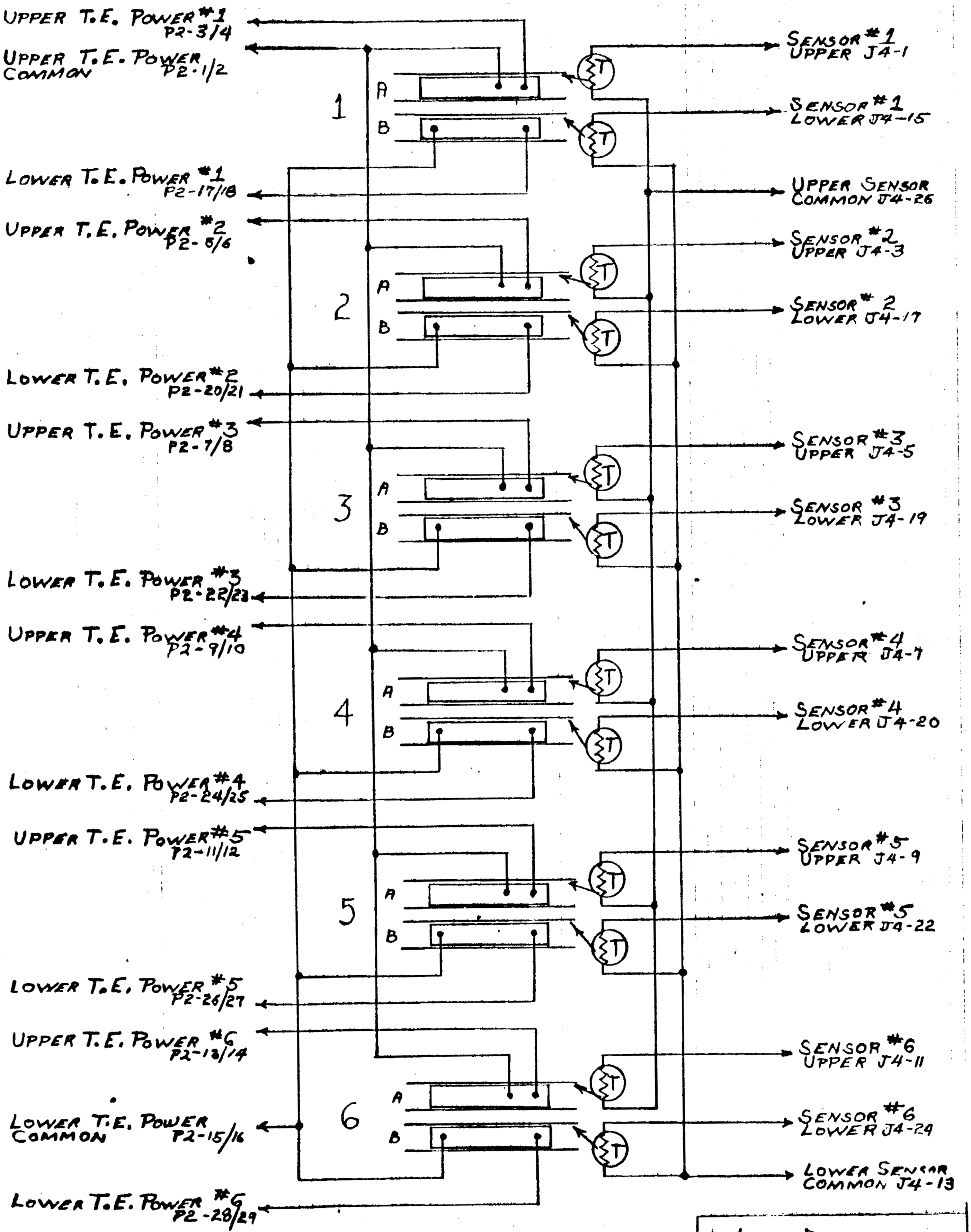

A UPPER THERMOELECTRIC ELEMENT - MELCOR # CP2-31-10 MOD. 10 COUPLES

B LOWER THERMOELECTRIC ELEMENT - MELCOR # CP2 31-06

Ⓣ TEMPERATURE SENSOR MINCO PRODUCTS #1044B

WIRING DIAGRAM
HEAT SINK
IHFSU 12/10/67

FIGURE 3-4

The under side is tapered in a pyramid fashion staring from a rectangular section in the center which is equal to the area covered by the thermoelectric modules and tapering towards the outside. The center thickness of the block is 1" and the outside thickness is 0.25". This geometry concentrates the thermal mass directly under the thermoelectric elements where the heat is being produced.

The under side contains a hollowed area in the center section used to house the wires and connectors. The wires originate from the thermoelectric module assemblies and pass through holes in the aluminum block to the hollowed out area. One of two connectors is used for the power wires and the other connector is used for the sensor wires. Figure 3-4 shows the wiring schematic for the thermoelectric assemblies.

3.2 SENSOR ELECTRONICS PACKAGE

The Sensor Electronics Package contains all the circuitry necessary to sense and control the temperature of the thermoelectric module assemblies. This electronic circuitry includes the power supply, the sensing circuitry, the digital control logic and the SCR Power commutator.

The package itself contains a transistor heat sink, five electronic circuit boards and two SCR heat sink plates. The transistor heat sink is used to house the power transistors required for the power supply. The five electronic circuit boards are stacked and staring at the bottom are numbered 1 through 5 and contain the following circuitry.

Board #	Function
1	Power Supply Board #1
2	Power Supply Board #2
3	Digital Control Logic
4	Lower Control Circuits
5	Upper Control Circuits

The two SCR heat sink plates are mounted on top of one another with the top SCR plate commutating power to the upper thermoelectric elements and the lower SCR plate commutating power to the lower thermoelectric elements.

The Sensor Electronics has the capability of controlling one thermoelectric module assembly through the use of two independent servo systems, one controlling the upper thermoelectric element and the other controlling the lower thermoelectric element. Sequencing and switching between thermoelectric elements is under control of the External Sequencer.

3.2.1 Power Supply

The power supply consists of a multiple output DC to AC inverter and several rectifier and regulator circuits. The DC to AC inverter shown in Figure 3 5 is a saturable core reactor. Its frequency of operation is 1.5KHz with 28 volt source input. The secondary windings are used to supply power to both the upper and lower thermoelectric units and the DC voltage regulators. The inverter exhibited 80% efficiency at the full power point. Both transistors are mounted on the heat sink and the rest of the components, including the core, are mounted on power supply board #1.

CORE: DYMAC #D10148-10-BH1

TURNS
N1 = N1' - 52T #16 WIRE
N2 = N2' - 10T #28
N3 = N3' - 5T #12
N4 = N4' - 9T #12
N5 = N6' - 10T #28
N6 = N6' - 36T #26
N7 = N7' - 24T #26
N8 - 24T #26

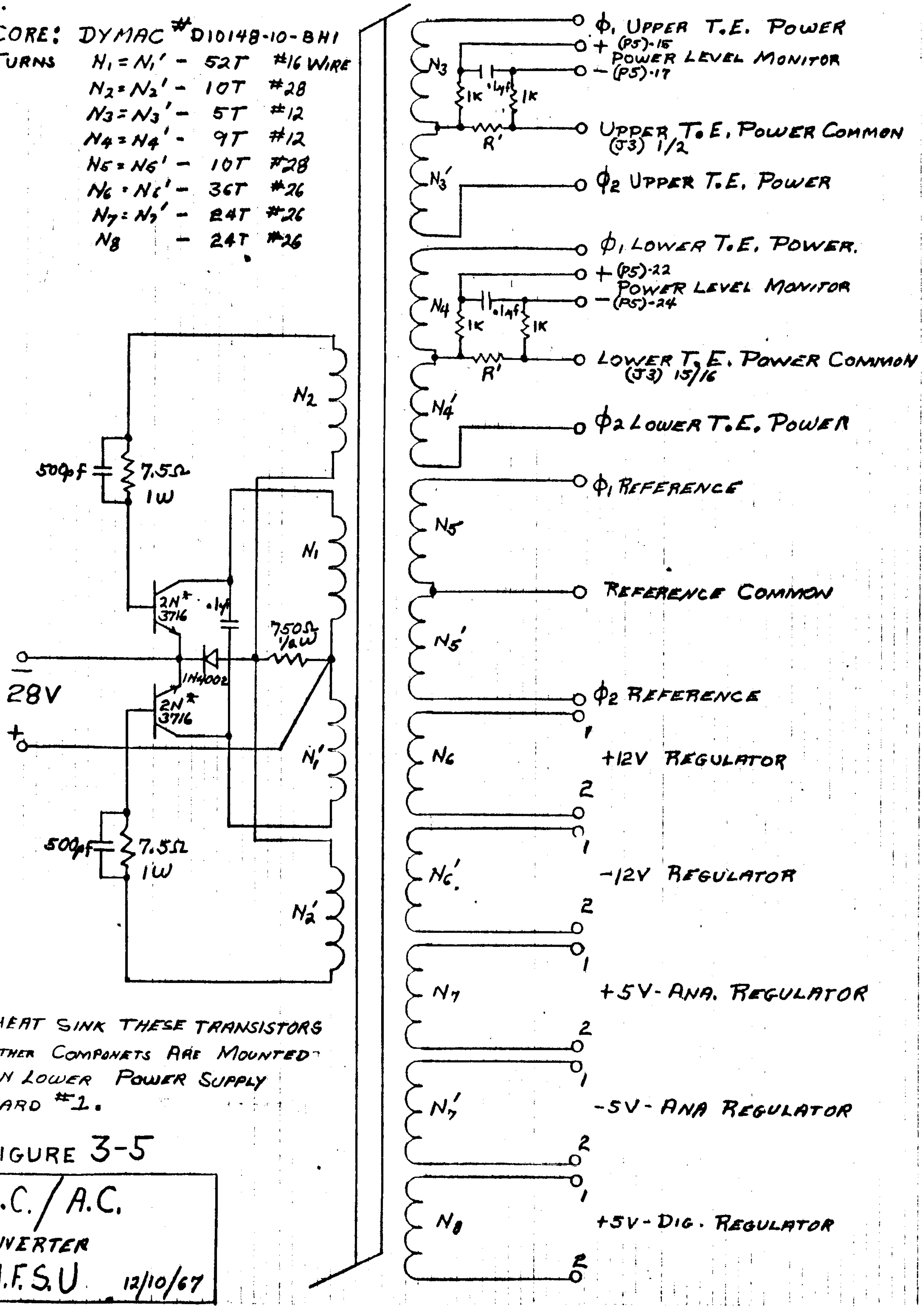

* HEAT SINK THESE TRANSISTORS
ALL OTHER COMPONETS ARE MOUNTED ON LOWER POWER SUPPLY CARD #1.

FIGURE 3-5

D.C./A.C.
INVERTER
I.H.F.S.U 12/10/67

Figure 3-6 shows the three 5 volt regulators. The upper two regulators supply power to the bridge commutator and other analog circuits while the lower regulator supplies power to the digital control circuits. All three regulators receive their inputs from the DC to AC inverter secondary windings as shown on the schematic. These AC signals (square waves) are rectified and filtered. The 100 microhenry chokes are used to suppress current transients through the filtering capacitors. The heart of each regulator is an integrated circuit voltage regulator (National Semiconductors LM-200) which is operated in conjunction with a series pass transistor (RCA 40250). These three transistors are mounted to the transistor heat sink. The other transistor (2N3134) is used to provide current gain between the base of the series pass transistor and the control output of the LM 200. The one ohm resistors in series with the pass transistor are used for sensing load current. This one ohm resistor will switch the voltage regulator to a constant current regulator when the load current is greater than 200 MA. In the case of the bottom regulator, this point is 400 MA. This provides short circuit protection for each regulator. The 500 ohm trim potentiometers at the output of each voltage regulator are provided for voltage adjustment. These potentiometers are accessable through the transistor heat sink. All three voltage regulators are mounted on Power Supply Board 1.

Figure 3-7 shows the +12V and -12V voltage regulators. These circuits are used to supply power to amplifiers and other control circuits within the Sensor Electronics package. As in the case of the previously described circuits, the inputs to these regulators are derived from the DC to AC inverter. The AC signals are rectified and filtered and fed to a Beckman Model 802 thick film voltage regulator. This regulator can supply over

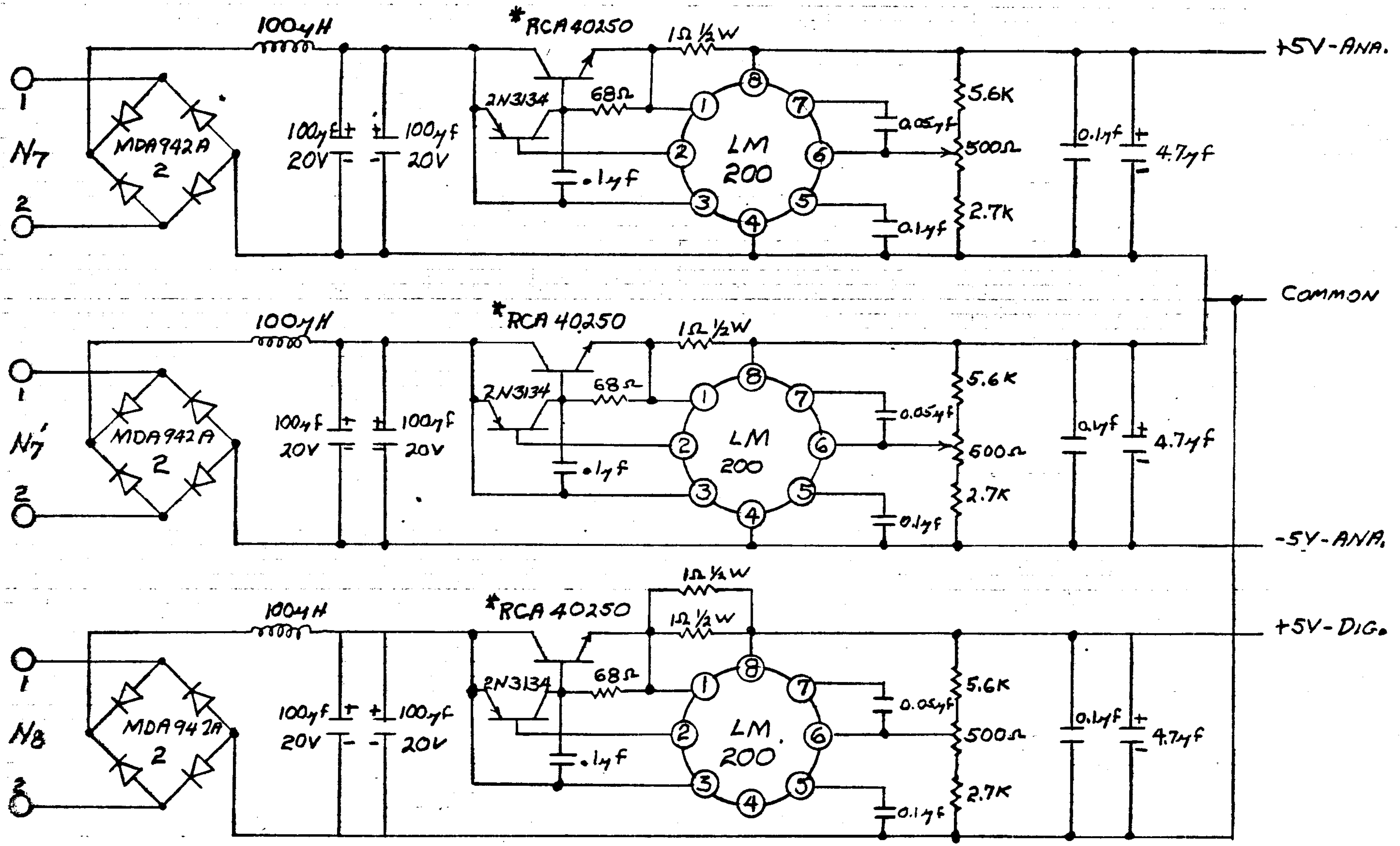

FIGURE 3-6

+5V, -5V, AND +5V-DIG.
POWER SUPPLIES
IHFSU 12/10/67

* RCA 40250 HEAT SINK THESE TRANSISTORS
ALL OTHER COMPONENTS MOUNTED ON POWER SUPPLY
BOARD #1

LM200 - NATIONAL SEMICONDUCTOR - VOLTAGE REGULATOR
MDA942A-2 MOTOROLA

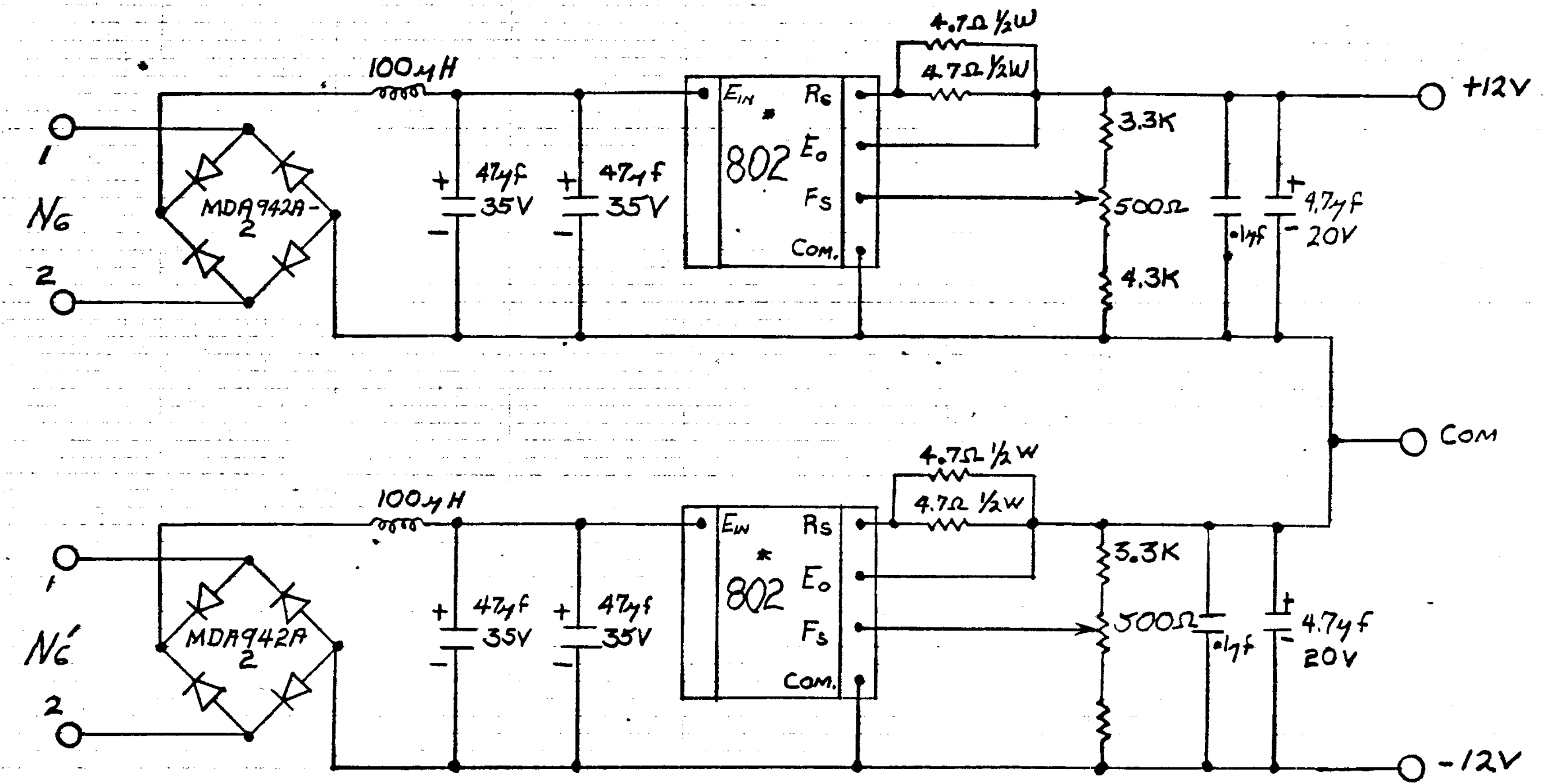

*MOUNT MODEL 802 VOLTAGE REGULATOR (BECKMAN) ON HEAT SINK -

ALL OTHER COMPONENTS ON POWER SUPPLY BOARD #2

MOTOROLA MDA942A-2

FIGURE 3-7

+12V, -12V
POWER SUPPLY
IHFSU
12/10/67

200 MA of load current without the use of external series pass transistors. The 500 trim potentiometers provide adjustment for the output voltages and are accessable through the transistor heat sink. The Model 802 voltage regulators are also mounted on the transistor heat sink while all the other components are mounted on Power Supply Board 2.

3.2.2 Control Circuits

Figure 3-8 shows the schematic diagram for the Upper Control Circuit and Figure 3-9 shows the same diagram for the Lower Control Circuit. Both schematics are functionally identical. The Upper Control Circuits provide the sensing and controlling functions for the temperature control servo system of the upper thermoelectric elements while the Lower Control Circuit controls the temperature of the lower thermoelectric elements.

The inputs to the Upper Control circuit are the six upper temperature sensors located in thermal contact with the upper thermoelectric elements. Each sensor is connected through a series 500 ohms trim potentiometer to the emitters of six double emitter switching transistors (3N108). When one of these switching transistors is conducting a single active arm bridge is formed with the switched temperature sensor as the active arm. The bridge is preadjusted to balance when the sum of the sensor resistance and its series trim potentiometer resistance equal 500 ohms. Considering the two temperature extremes, the sensor resistance at $+125^{\circ}C$ is nominally 500 ohms so that by setting trim potentiometer to zero ohms the bridge would balance when sensor temperature reached $+125^{\circ}C$. At the other extreme, the sensor resistance at $-60^{\circ}C$ is nominally 228 ohms so that if the series trim potentiometer were set to 272 ohms then the bridge would balance at $-60^{\circ}C$.

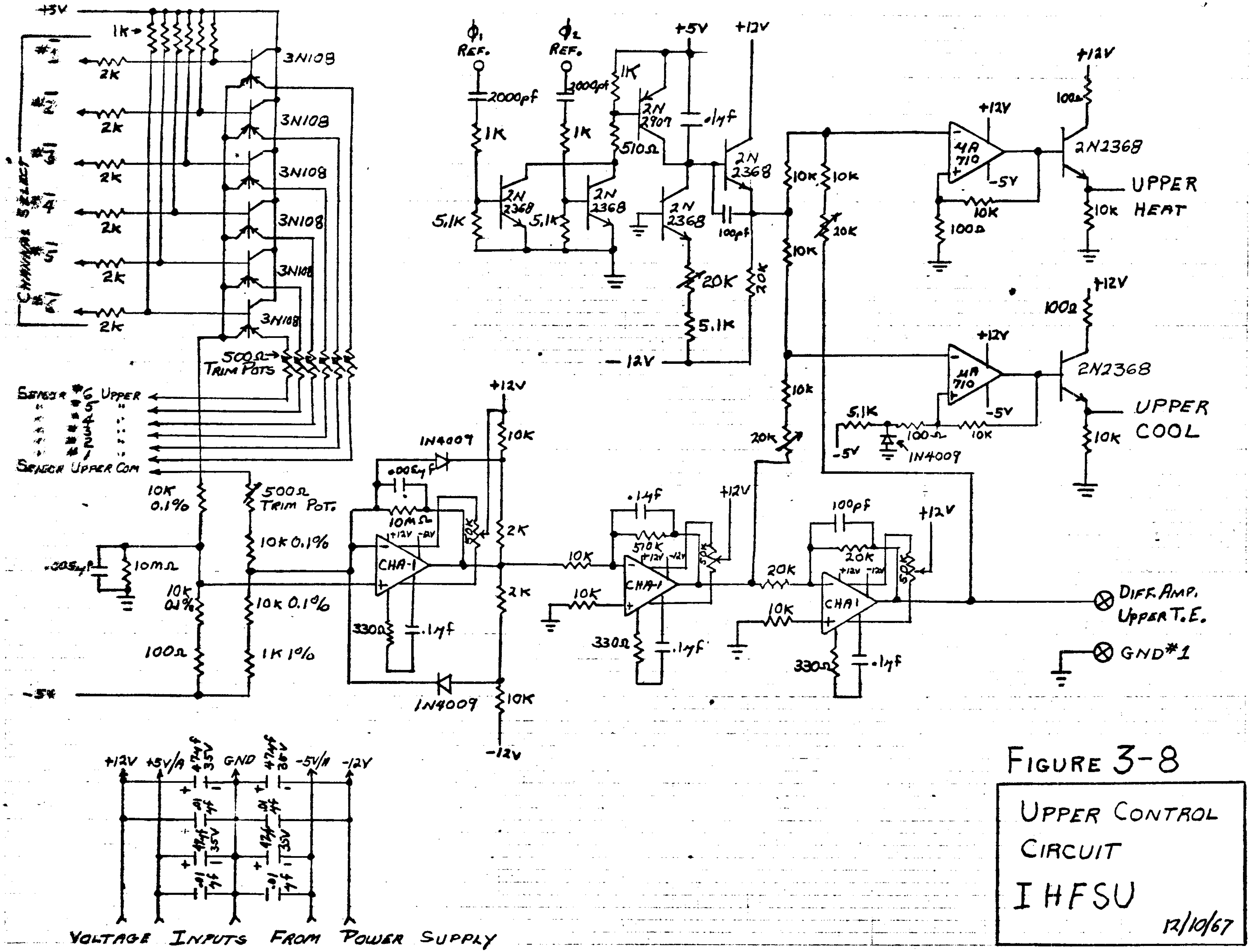

FIGURE 3-8

UPPER CONTROL
CIRCUIT
IHFSU
12/10/67

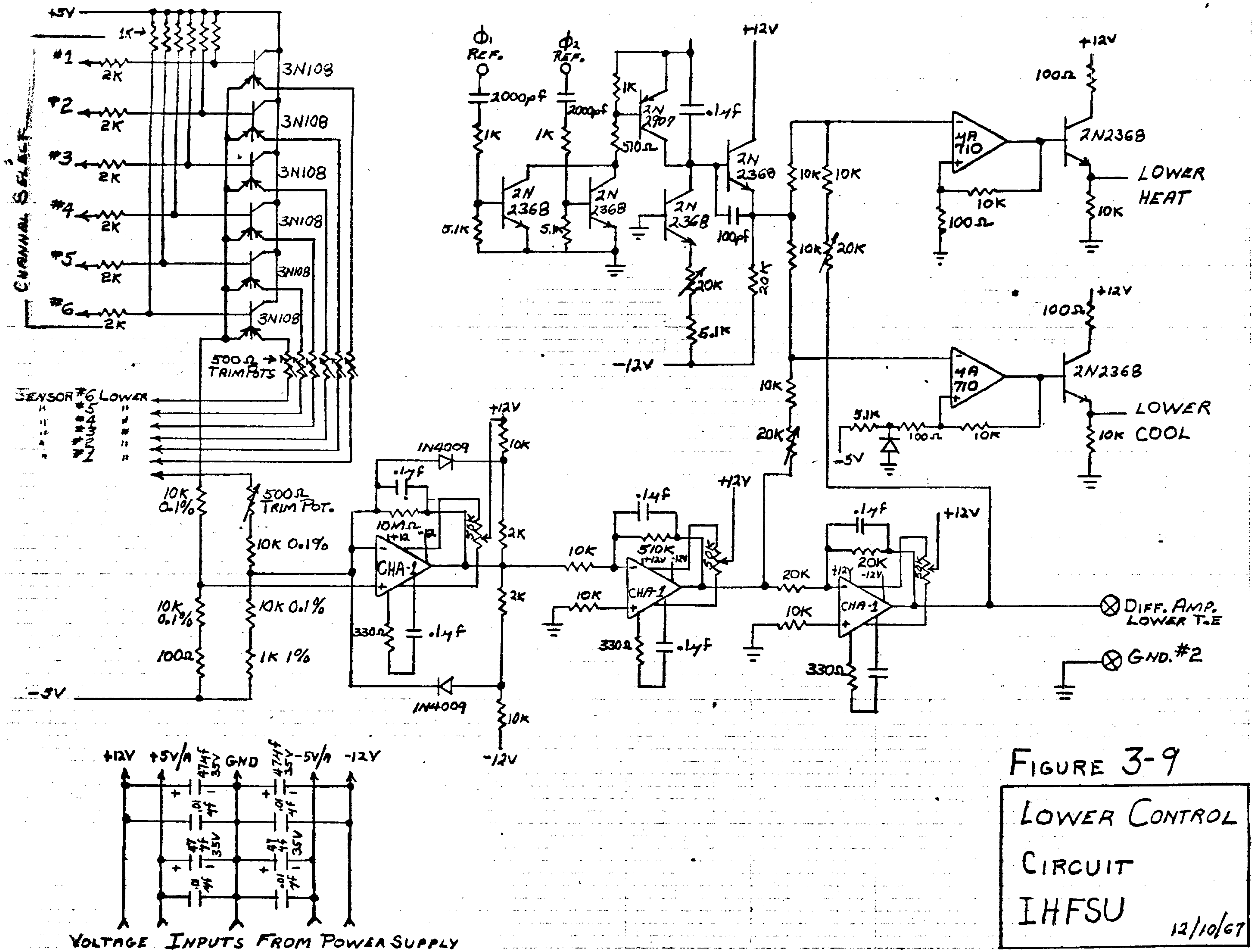

FIGURE 3-9

LOWER CONTROL CIRCUIT IHFSU

12/10/67

The six double emitter switching transistor (3N108) are configured to form a commutator whereby the six temperature sensors are individually switched into the bridge circuit. The 3N108 transistor is turned on by applying zero volts to the 2K resistor connected to its base and is turned off by the application of plus five volts. The signals which control these six transistors originate in the External Sequencer.

Measurements taken on the 3N108 transistor show that as a switch in the "ON" state, it exhibits about 20 ohms series resistance as measured from the collector to each emitter. This is relatively high in comparision to the required detection level (one ohm); however, the differential resistance is on the order of one ohm and will track to better than 0. 5 ohm over a wide temperature range. The differential offset voltage is on the order of 50 microvolts. Therefore, once the bridge is initially calibrated, the balance point should remain the same within reasonable limits under adverse environmental conditions.

The imbalance voltage generated by the bridge is amplified by a low drift differential amplifier (Nexus CHA-1). The output voltage from this first amplifier was calculated from the following expression:

$$e_o = \frac{\alpha E n (n+1)}{(1+\alpha)(2n+1)}$$

where $n = \frac{R_F}{R_B}$

$\alpha = \frac{R_S}{R_B}$

and

R_F = Amplifier Feedback Resistance

R_B = Bridge Arm Resistance

R_S = Imbalance Resistance

With the values of bridge resistance and feedback resistance shown, this first amplifier has a gain of 6OMV per ohm of bridge imbalance. Diode clamping is used to keep this amplifier out of heavy saturation.

The second amplifier is the same type as the first and is used in an inverting configuration with a gain of approximately 51. Its output voltage is a function of bridge imbalance and is equal to 3 volts per one ohm of imbalance.

The third amplifier is again the same type and is used in a unity gain inverter configuration. The outputs from the second and this third amplifier are two signals which have the same magnitude (3V/Rs) and opposite in sign.

These two voltages are used as inputs to two summing comparator circuits (Fairchild A710). The other inputs to these circuits are from a sweep generator. This sweep circuit is triggered from two reference windings (ϕ_1 and ϕ_2) in the DC to AC inverter. The signals ϕ_1 and ϕ_2 are two square waves 180° out of phase and coherent with the DC to AC inverter frequency. The positive edge of each signal is differentiated and fed to a "NOR" gate. The output from this gate is used to reset the sweep generator. This sweep generator operates by starting at +5 volts at the reset time and sweeping negative towards zero volts until the next reset time. The period between resets is equal to the half cycle interval of the DC to AC inverter.

The sum of the sweep voltage and the second amplifier feeds the negative input of one comparator circuit while the sum of the sweep voltage and the third amplifier feeds the negative input of the other comparator circuit. The positive inputs in both circuits are connected to the outputs to form positive feedback.

This induces hysteresis into each comparator circuit which is equal to the ratio of the resistor to ground and the feedback resistor times the full scale output. For the values of resistors shown, the hysteresis is about 20 MV. This guards against noise triggering of the comparators while introducing negligible error into the system.

The potentiometers in series with the output of the second and third amplifiers are used to adjust the voltages at the comparator inputs such that when the amplifiers are at their most negative voltage levels and the sweep generator is at its most positive voltage (just after reset) the negative input to the comparator is slightly positive. This insures a comparator output when either amplifier is in saturation. During the sweep period one of the comparators will change states depending on which amplifier is at a negative level which in turn depends on the direction of bridge imbalance. The time at which the comparator transition takes place with respect to the beginning of one half cycle (corresponding to the reset time of the sweep generator) determines the amount of power switched into the thermoelectric element. This switching time is in turn controlled by the magnitude of the negative voltage level of one of the amplifier outputs.

The net result is that the magnitude of bridge imbalance controls the phase angle switching point of the comparator circuits with respect to the DC to AC inverter frequency and in addition, the direction of bridge imbalance determines which comparator switches. The comparator outputs are labeled "heat" and "cool" which indicates which switching action results in heating or cooling of the thermoelectric element under control. Tracing the circuitry back to the bridge it is seen that the heating and cooling comparators switch to cause the resistance of the temperature sensor to change in direction to effect bridge null.

3.2.3 Digital Control Logic

The function of the Digital Control Logic circuitry (Figure 3-10) is to steer the four comparator outputs (described in the previous section) to the SCR power commutating circuits. The steering function is under the control of the External Sequencer. The SCR power commutating circuits are triggered by the steered comparator outputs apply heating or cooling power to the selected thermoelectric module assembly thereby effecting the temperature control.

A total of ten inputs are shown, four from the comparator circuits and six from the External Sequencer. The four comparator inputs are labeled U/C, U/H, L/C and L/H and indicate upper cool, upper heat, lower cool and lower heat respectively. Each of these signals are capacitor coupled into the base of a transistor. A positive transistion from a comparator output results in a 2 microsecond pulse at the output of the corresponding transistor. These pulses are used to trigger the SCR power gating circuitry.

The set of six inputs from the External Sequence are labeled Enable #1 through Enable #6. These numbers correspond to thermoelectric module assembles one through six. The enable signals feed simple transistor inverters. The inverter outputs in turn drive gate elements and also feed back and drive the upper and lower bridge commutating switches described in the previous section. These signals are labeled $\overline{\#1}$ through $\overline{\#6}$.

To select a particular thermoelectric module assemble, the External Sequencer applies a positive voltage to the appropriate enable line. This signal is inverted thereby appling a zero volt level to the selected bridge

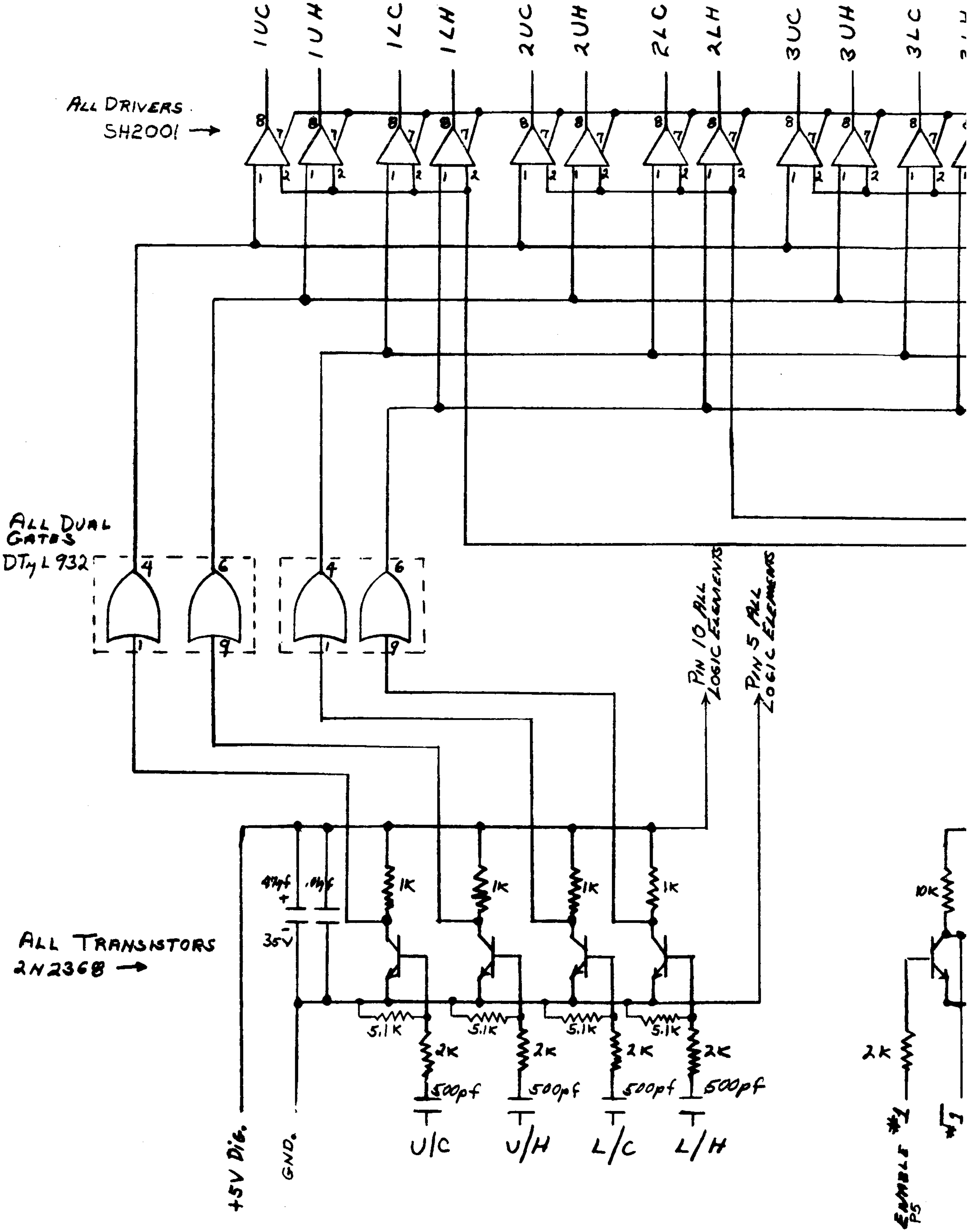

Fig. 3-10-A

3-23-A

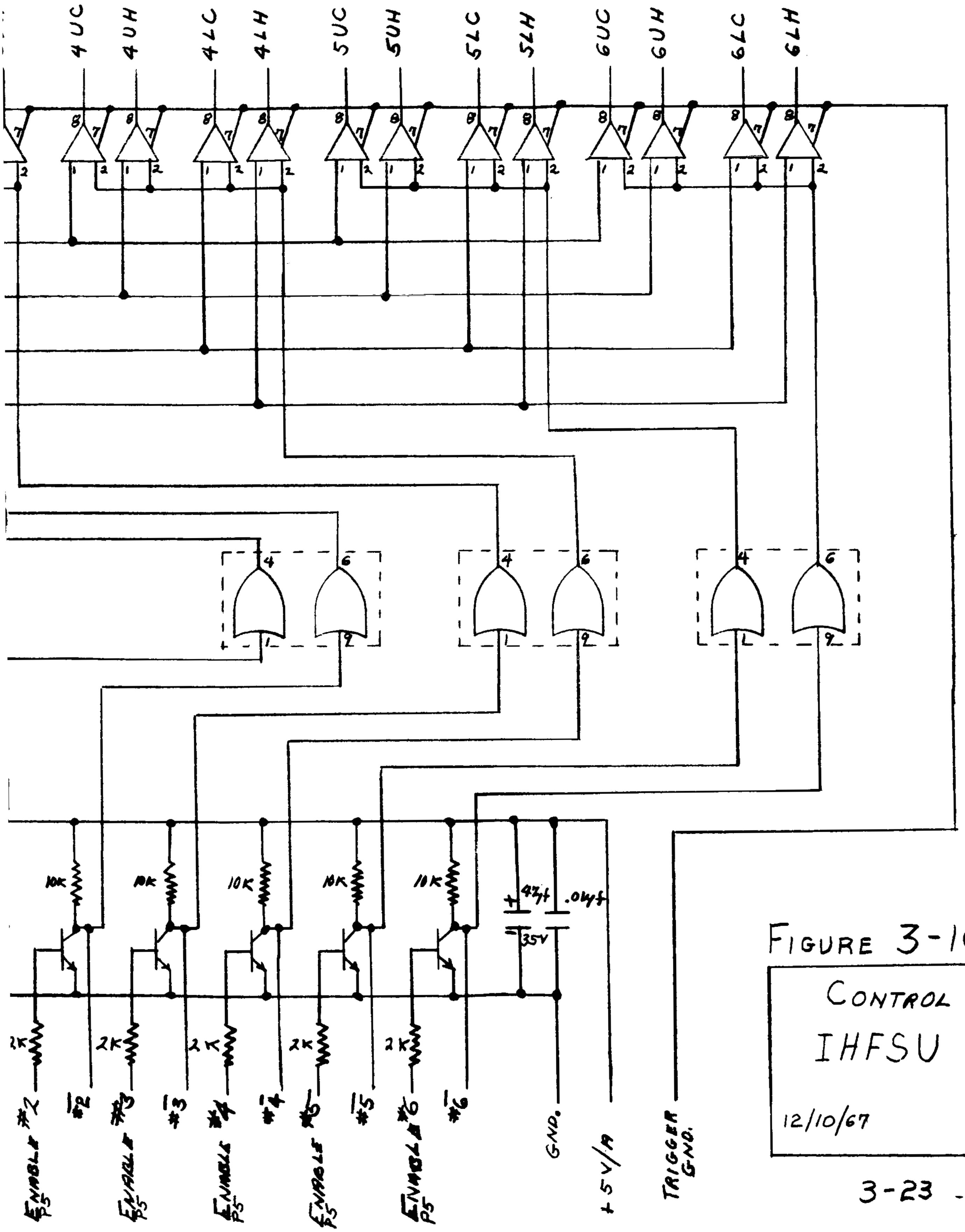

FIGURE 3-10-B

CONTROL LOGIC

IHFSU

12/10/67

3-23-B

Figure 3-10-B

commutating switch on both the upper and lower control circuits. This same signal is again inverted and used to enable a group of driver circuits which in turn allows the four comparator signals to trigger the selected SCR's.

A total of 24 drive circuits are required, four for each thermoelectric module assembly. Two of the four drivers enable heating of the upper and lower thermoelectric elements of a given assembly while the other two drivers enable cooling of these same upper and lower thermoelectric elements. Once a group of drivers is enabled, the four comparator output signals then operate these drivers. Note, that the comparator input signals are buffered and are connected to each of the six groups of four drivers. Therefore, the enabled signals from the external sequencer, in effect, steers the comparator signals to a group of four drivers which in turn drive the appropriate SCR power gating circuits.

3.2.4 SCR Power Commutators

The upper and lower SCR power commutators (Figures 3-11 and 3-12) are identical. One drives the upper thermoelectric elements and the other drives the lower thermoelectric elements. Drive signals originate from a group of four drivers, previously described, with two driving the selected upper position and the other two driving the same corresponding lower position.

Both upper and lower SCR power commutators operate the same. Considering the upper commutator only, three SCR's are used to supply power to a single thermoelectric element position. The power input to each SCR consists of two square waves, 180° out of phase, originating from the DC to AC

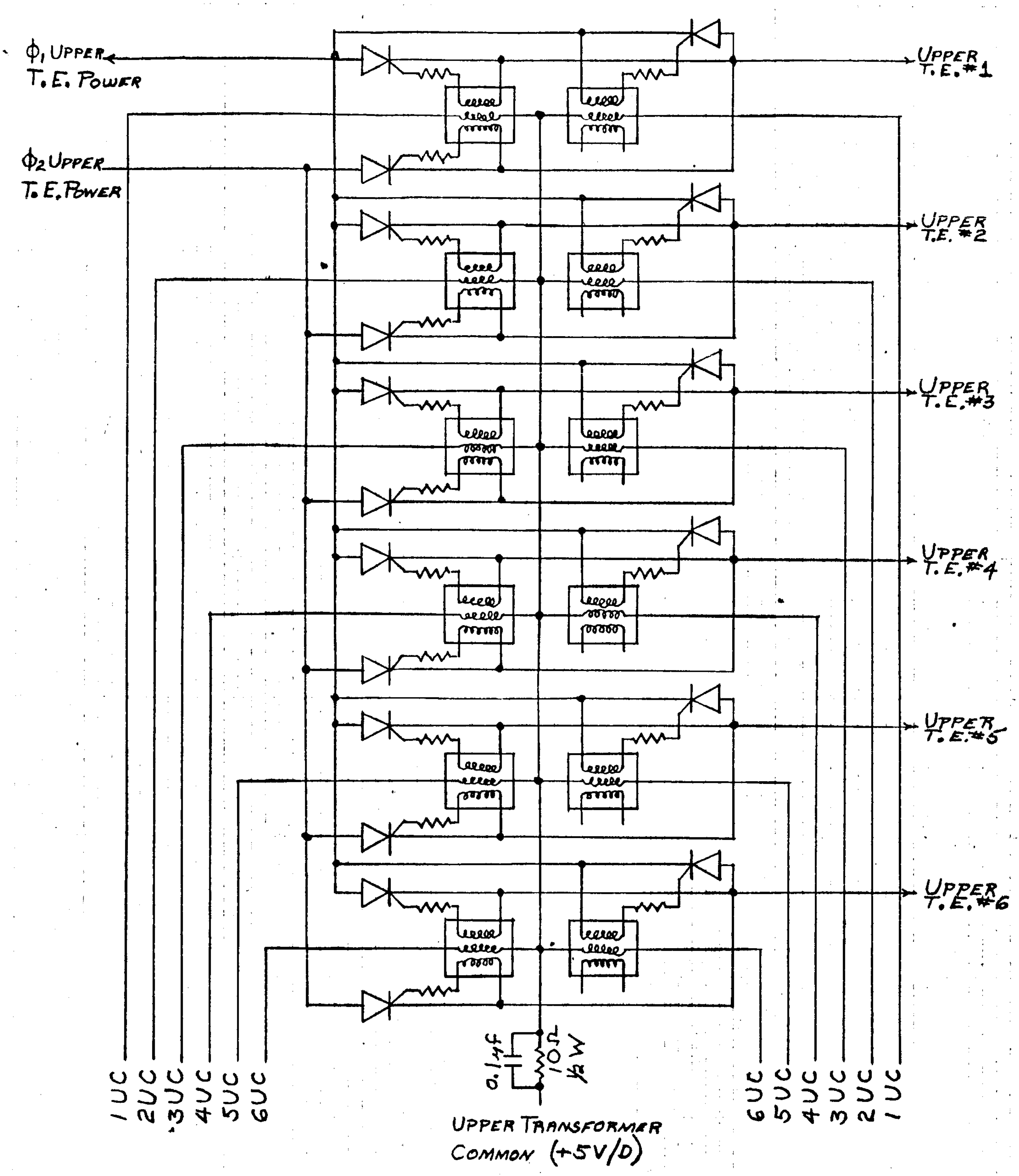

Resistors: 51Ω
Transformers: Aladdin #306-144
SCR's: Motorola # MCR2918-2
SCR's*: Motorola # MCR2918R-2

Figure 3-11

Upper T.E.
Power
Commutator
IHFSU 12/10/67

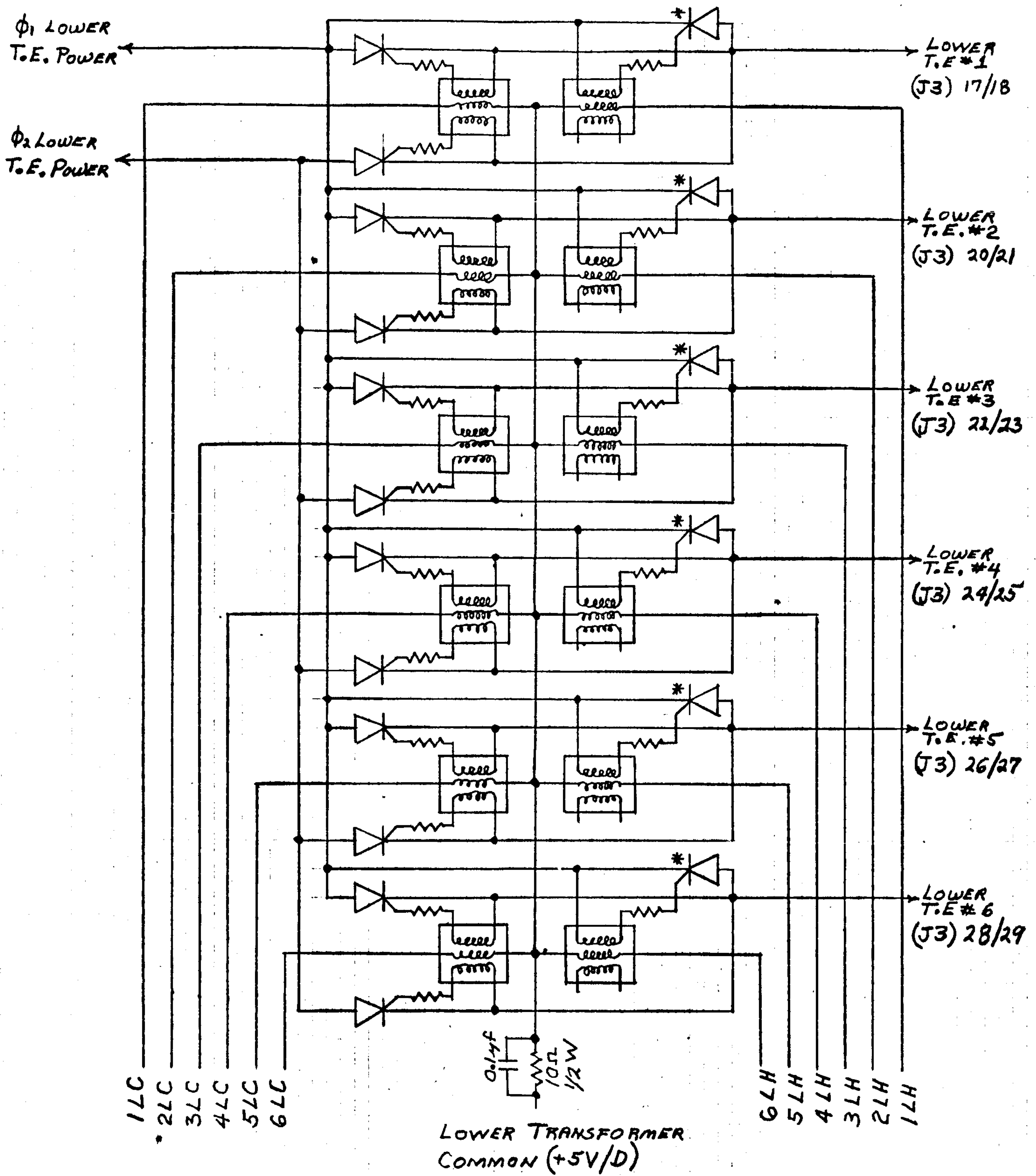

RESISTORS: 51Ω

TRANSFORMERS: ALADDIN #306-144

SCR's: MOTOROLA MCR2918-2

SCR's*: MOTOROLA MCR2918R-2

FIGURE 3-12

LOWER T.E.
POWER
COMMUTATOR
IHFSU 12/10/67

inverter. Considering the cooling mode, these two power signals are each connected to the anodes of two SCR's. The gates of these SCR's are driven from a transformer coupled signal originating at the upper cool comparator circuit and buffered by the enabled drive circuit. A 2μ sec trigger signal from this driver will turn on the SCR's whose anode is positive. This SCR will remain on until the end of the half cycle of the DC to AC inverter. At this time the power input signal goes from a positive level to a negative level and turns off the SCR. The second SCR then receives a positive power input signal and the process is repeated. In this manner full wave cooling power is delivered to the thermoelectric elements.

Heating power is delivered to the thermoelectric element with a single SCR. This SCR is connected in the opposite direction from the cooling SCR's i. e. the power input signals connected to its cathode. As in the case of the cooling mode the triggering signal is transformer coupled and originates from the upper heating comparator which is buffered by a driver. In this case the SCR is turned on by a 2μ sec signal when the input power signal is negative. It remains on until the end of the half cycle period when the input power signal goes positive and turns off the SCR. This action is repeated every other half cycle since only single phase power is used for the heating mode. Note that heating and cooling SCR's should never be on at the same time or a short between the two power inputs results. Precautions were taken in the upper and lower control circuitry to insure that both heating and cooling signals would never occur during the same half cycle.

3.3 EXTERNAL SEQUENCER

The function of the External Seqquencer circuitry (Figure 3-13 and 3-14) is to supply six sequentially programmed enable signals to the Sensor Electronic Package. The unit operates in two modes, automatic and manual. In the manual mode, the six enable signals are generated by the Manual Selector Switch S4 as shown in Figure 3-13.

In the automatic mode the unit sequentially provides the six enable signals to the Sensor Electronics Package. The individual enable signal "on" time is adjustable from one to ten minutes in one minute increments while the time between successive enable signals is adjustable from 10 minutes to 100 minutes in 10 minute increments.

In the automatic mode of operation, the system operates from the 60 Hz AC line input frequency. This signal is squared by a Schmitt trigger (A 13-2) and fed to the clock selector switch (S6). In normal operation, this switch would be set so that the 60 Hz square wave is connected to the next gate. The other position of this switch connects an external clock to this input and is meant for check-out purposes. The clock signal (normally 60 Hz) drives a 14 flip flop count down chain. These flip flops are arranged such that the frequency of the last flip flop is one pulse per minute. This signal then drives a decade counter (divided by 10). It is from this counter that the enable time is derived. This accomplished by decoding one minute through ten minutes and connecting these ten lines to a 10 position switch labeled "Sample Time Selector" (S1). The enable time is then derived by setting flip flop to a "one" at time zero minutes and resetting it to a "zero" at the time selected on the sample time selector switch.

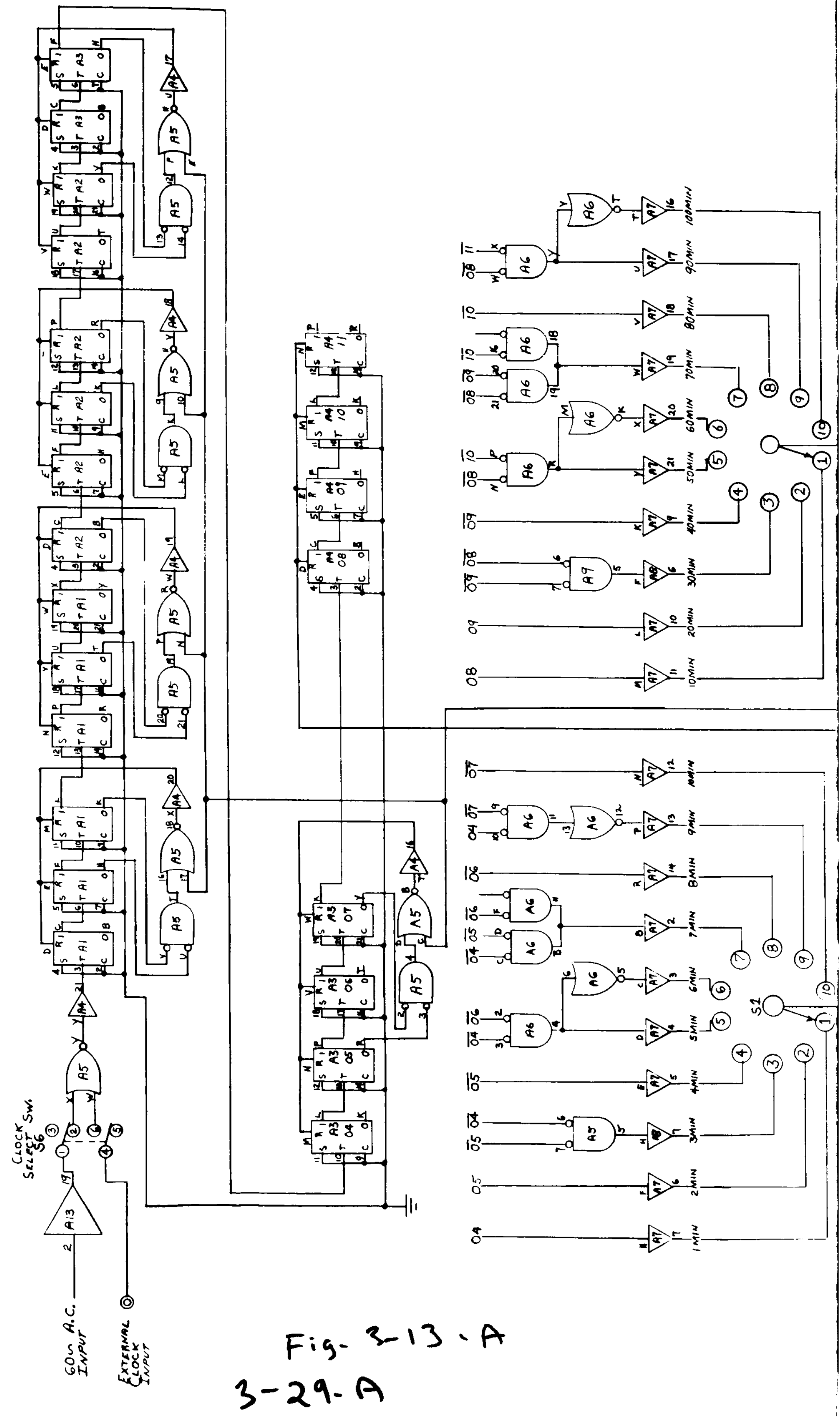

Fig. 3-13-A

3-29-A

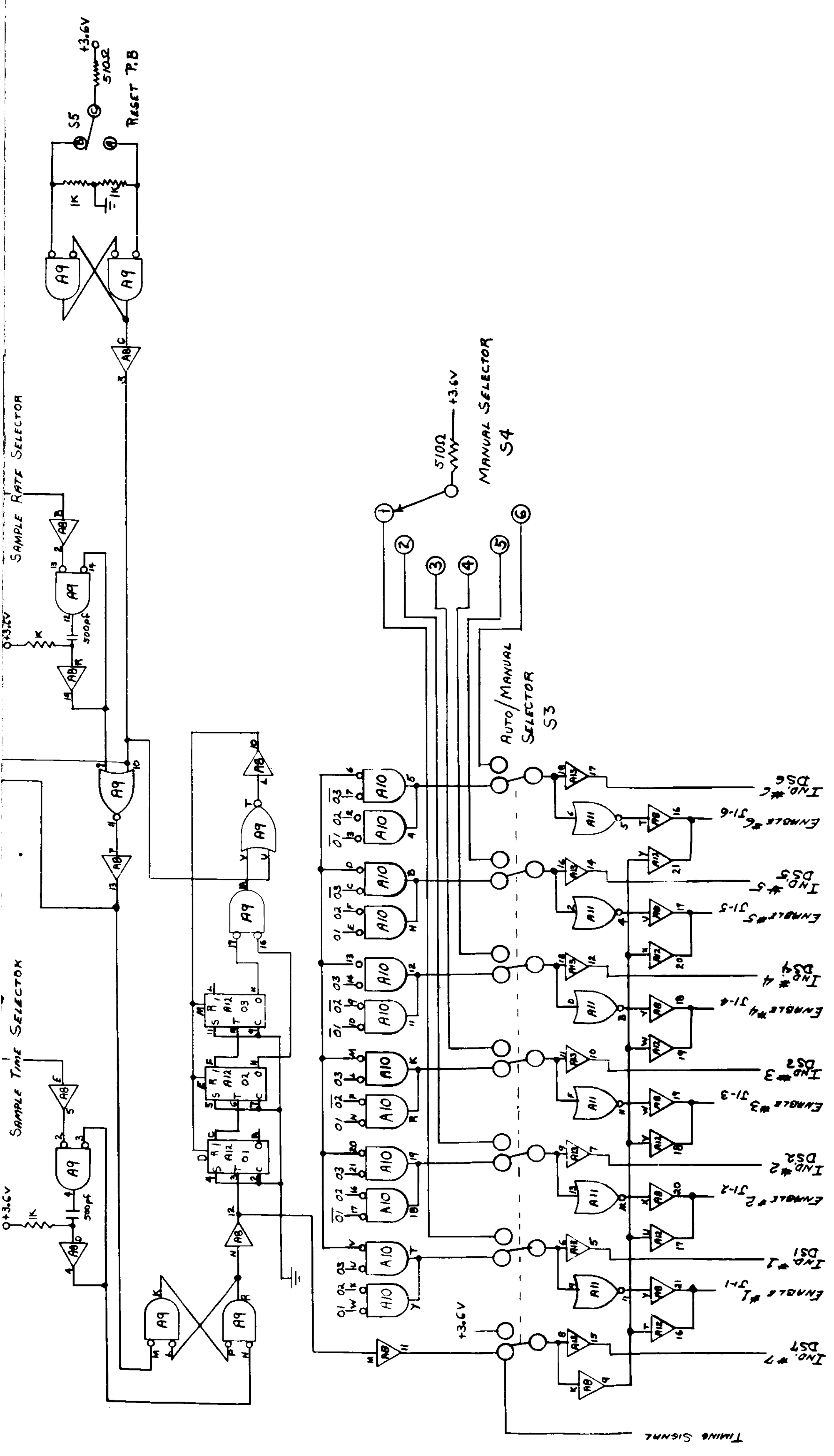

Reset P.B
S5
510Ω
+3.6V
1K
Sample Rate Selector
Sample Time Selector
500pf
Manual Selector S4
Auto/Manual Selector S3
A8
A9
A10
A11
A12
A13
Ind. #1 DS1
Ind. #2 DS2
Ind. #3 DS3
Ind. #4 DS4
Ind. #5 DS5
Ind. #6 DS6
Ind. #7 DS7
Enable #1 J1-1
Enable #2 J1-2
Enable #3 J1-3
Enable #4 J1-4
Enable #5 J1-5
Enable #6 J1-6
Timing Signal

Figure 3-13 - B

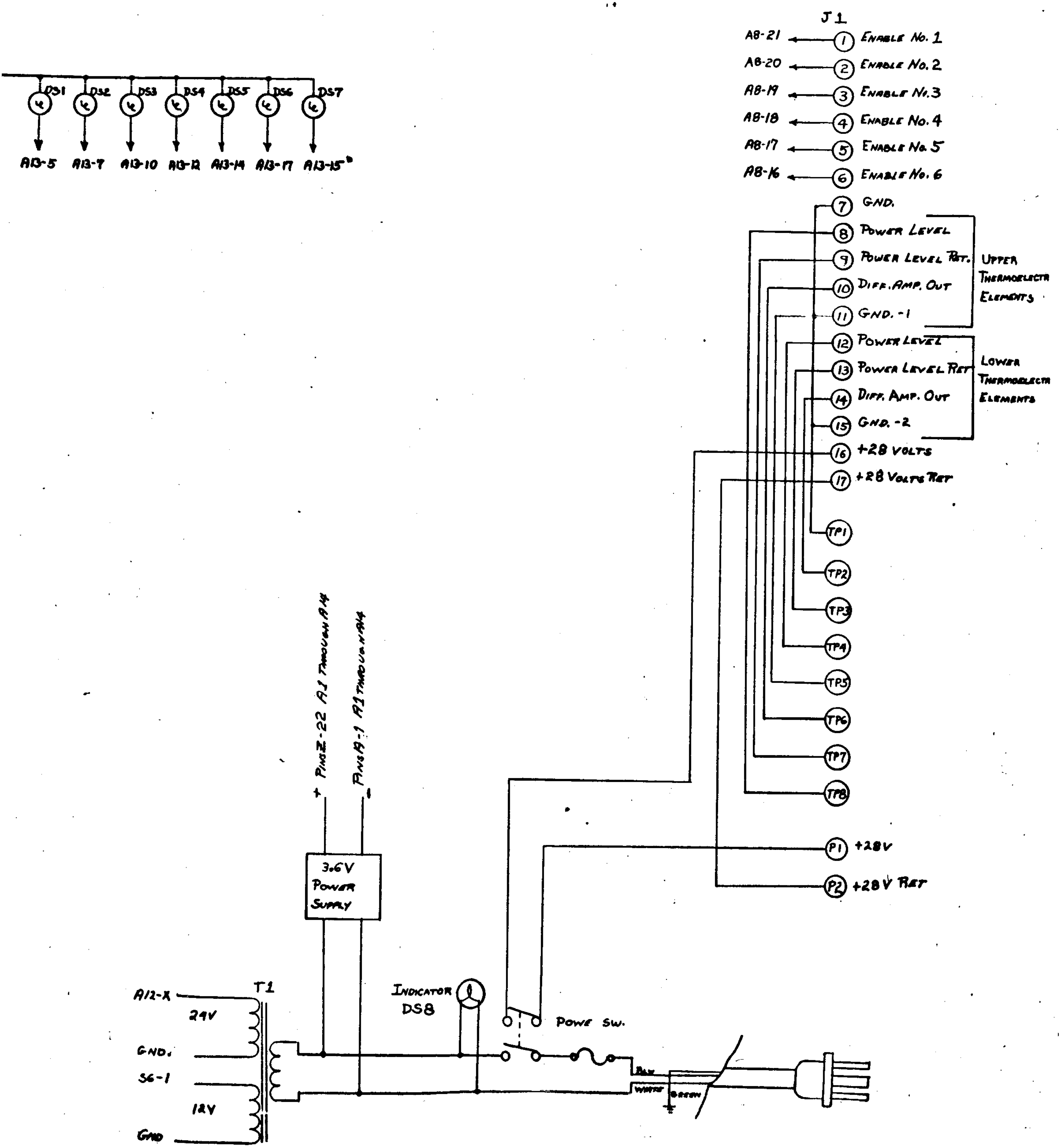

Figure 3-14

External Sequencer Connector Diagram

The time between successive enable signals is determined by a second counter which is advanced at time zero of the previous counter. Here again states one through ten are decoded. This provides ten minutes through 100 minute timing signals which are connected to the Sample Rate Selector switch. The selected position on this switch resets the counter. The resulting timing signal is "and-gated" with the previous enable signal to generate and enable signal of the selected time duration and selected repetition rate. This signal is used to advance a counter which is constructed to have six discrete states. These six states are decoded and "and-gated" with the above enable signal to form the six sequential enable signals.

4.0 OPERATING INSTRUCTIONS

The Isothermal Heat Flux Sensing Unit consists of three electronic packages; the Sensor Electronics, the External Sequencer, and the Heat Sink Assembly. Appropriate cabling and connectors are also provided. The following procedure indicates the method of connecting and operating these three units. In addition, the procedure is given for presetting the stabilization temperatures of the six sample plates.

4.1 TEST EQUIPMENT REQUIRED FOR OPERATION

4.1.1 +28VDC power supply capable of providing 0 to 4 AMPS at ± 5% load regulation

4.1.2 Voltmeter capable of reading 100 mv full scale and resolving ± 0.1mv.

4.1.3 Thermocouple temperature monitoring or other temperature sensing equipment.

4.2 PRELIMINARY SET-UP PROCEDURE

4.2.1 Power Connection - Connect the 28 VDC voltage source to the appropriate terminals on the side of the External Sequencer (Red is positive and Black is negative). The 28V voltage source can be energized since the system is not energized until the External Sequencer power switch is turned on.

4.2.2 Install Cables - The three units are connected together (External Sequencer, Sensor Electronics Package, and the Heat Sink) using the three cables provided. Figure 4-1 shows the cable connection scheme and Figures 4-2, 4-3, 4-4 provide cable interconnection wiring information.

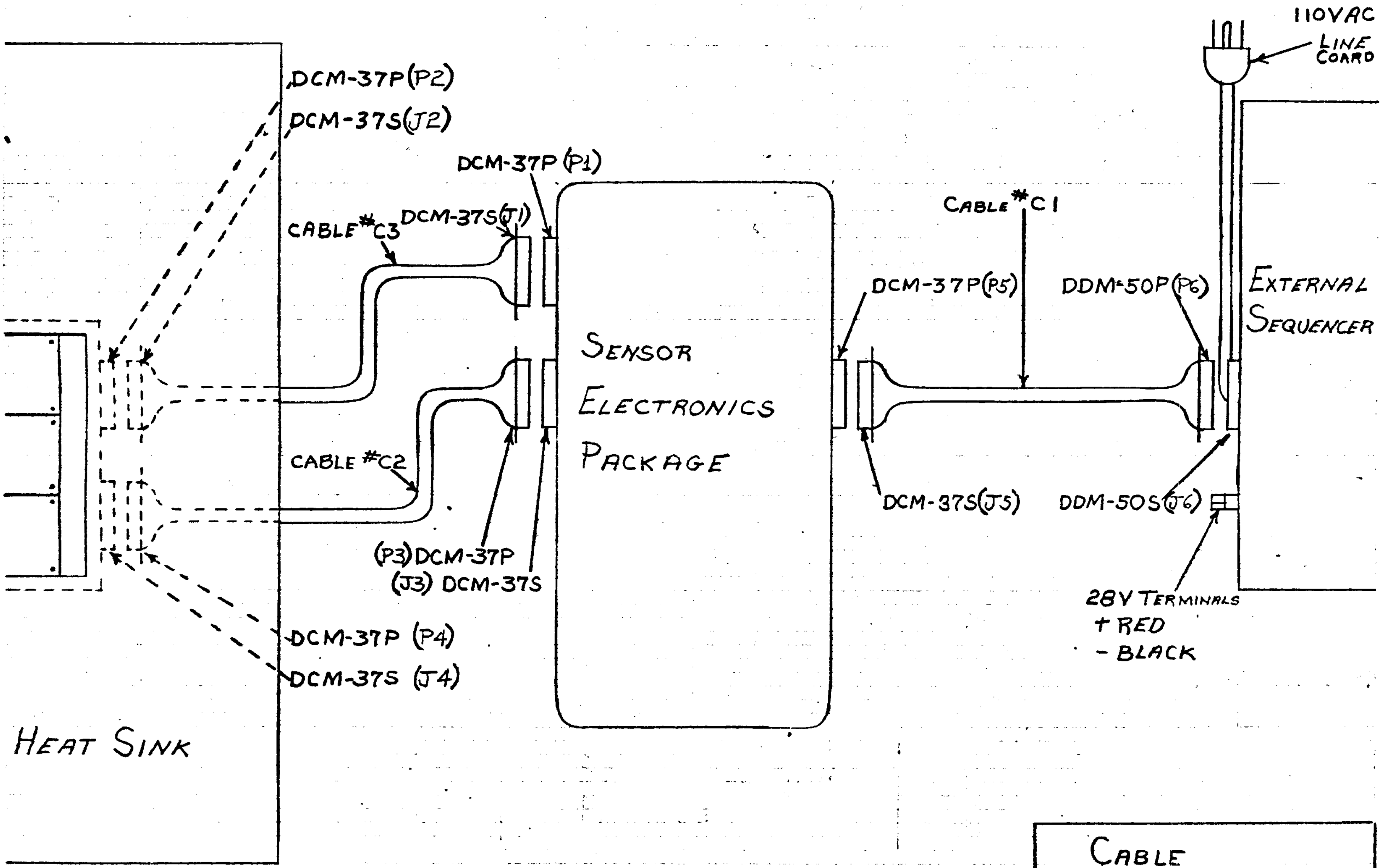

FIGURE 4-1

CABLE
CONNECTION
DIAGRAM
IHFSU
12/10/67

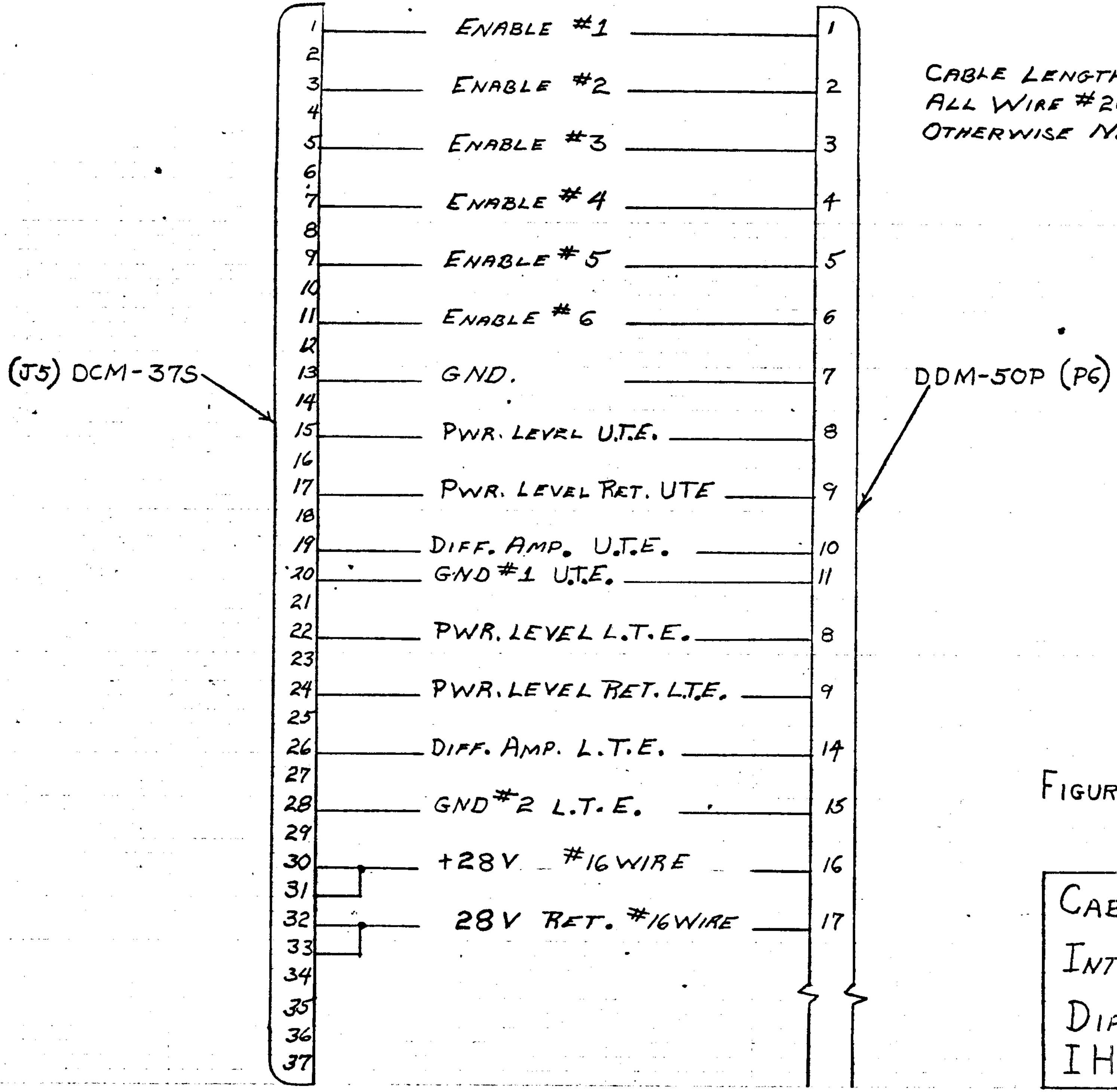

CABLE LENGTH 2.5 Ft.
ALL WIRE #20 UNLESS
OTHERWISE NOTED

FIGURE 4-2

CABLE #C1
INTERCONNTION
DIAGRAM
IHFSU 12/10/67

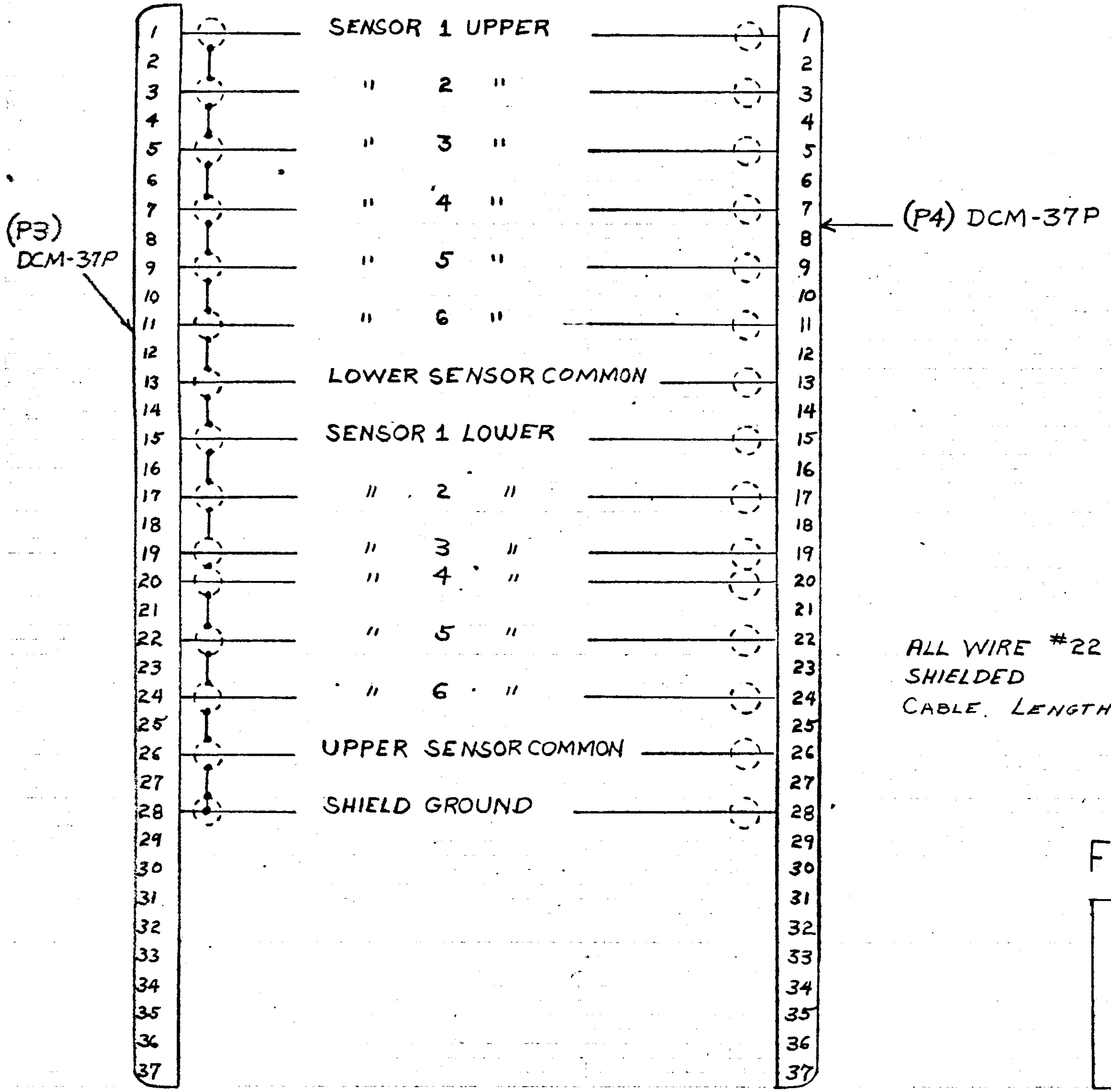

ALL WIRE #22 SINGLE CONDUCTOR
SHIELDED
CABLE LENGTH 2.5 FT.

FIGURE 4-3

CABLE #C2
INTERCONNECTION
DIAGRAM
IHFSU
12/10/67

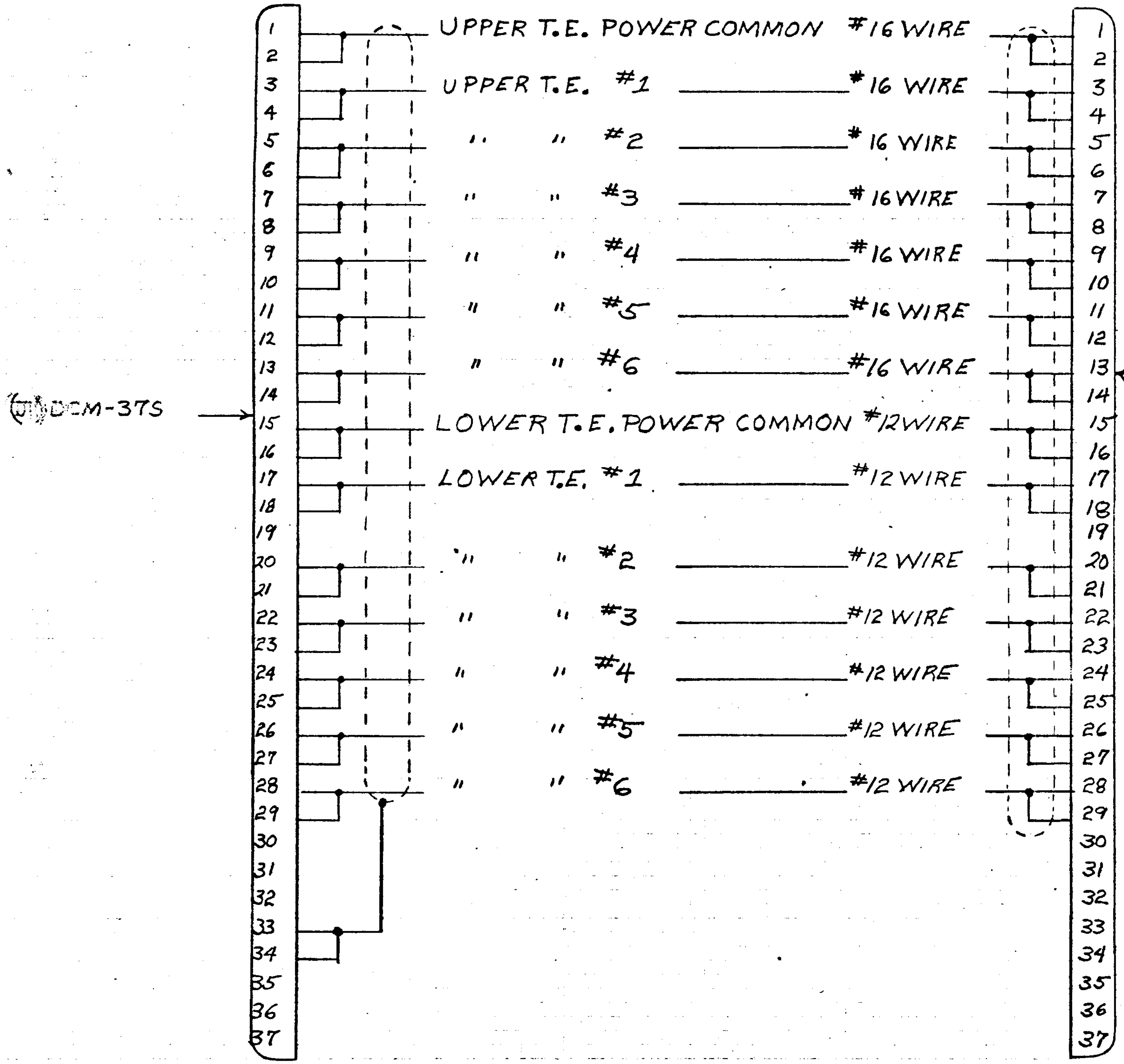

FIGURE 4-4

CABLE #C3
INTERCONNECTION
DIAGRAM
IHFSU 12/10/67

As seen in Figure 4-1, the two cables having 37 pin connectors at each end are used to connect the Heat Sink to the Sensor Electronics package. The side of the Sensor Electronics Package containing two receptacles is used for this purpose. The connectors and their receptacles are arranged such that these two cables cannot be interchanged.

The cable with a 50 pin connector at one end and a 37 pin connector at the other is used to connect the External Sequencer to the Sensor Electronics package. Connect this cable between the side of the Sensor Electronics package containing a single 37 pin receptacle and the 50 pin receptacle located on the side of the External Sequencer.

4.3 OPERATION

The system operates under control of the External Sequencer. The sequencer operates in two modes, automatic and manual. In the manual mode, the operator can selectively energize anyone of the six sample plate positions. The External Sequencer power switch then activates the entire system and the selected sample plate will be driven to the preset temperature.

In the automatic mode of operation the External Sequencer will sequentially apply power to the six sample plate positions. The sample time (power applied) and the time between samples (power duty cycle) are individually adjustable. Activation of the power switch will start the preset sequence which continues until the power is turned off.

The following is the detailed procedure for operating in the automatic and manual modes.

4.3.1 Manual Mode

4.3.1.1 With the External Sequencer turned off, set the mode switch to "Manual"

4.3.1.2 Set the "Manual Selector Switch" to the desired sample plate position (1 through 6, corresponding to the position number on the heat sink).

4.3.1.3 Turn the power switch "ON". The red position light corresponding to the selected position will come on. In addition, the white "Gate" light will come on. This light indicates that power is being applied to the thermoelectric element corresponding to the selected position.

4.3.1.4 The "Manual Selector Switch" can be changed to a new position at any time. Note: in the manual mode, the selected position is continuously energized and held at the desired temperature while External Sequencer power switch is "ON".

4.3.2 Automatic Mode

4.3.2.1 Set the mode selector switch to "Auto".

4.3.2.2 Set the clock selector switch to "INT".

4.3.2.3 Set the sample time selector switch to the desired sample time (selectable between one and ten minutes in one minute increments). This action sets the time duration that each sample plate position is under temperature control.

4.3.2.4 Set the sample rate selector switch to the desired sample rate (selectable between ten and one hundred minutes in ten minute increments). The duration from the start of one temperature control sample to the start of the next temperature control sample is set to this time.

4.3.2.5 Be sure the External Sequencer power switch is turned "ON".

4.3.2.6 Depress the reset button. This starts the sequencer at position one with position one energized. The position one red light will be on and the white gate light will be on. The gate light indicates that the sample position whose red light in "ON" is under temperature control.

4.4 TEMPERATURE SET - POINT ADJUSTMENT

The final temperature that each sample plate will achieve is adjustable. This is accomplished by removing the Sensor Electronics package cover and adjusting the appropriate trim potentiometers accessable through the transistor heat sink. The temperatures have been preset before delivery to the following:

Position No.	Lower T. E. Element	Upper T. E. Element
1	+20° C	+16° C
2	+40° C	+44° C
3	0°C	-4° C
4	+60° C	+64° C
5	-16° C	-20° C
6	+78° C	+82° C

The following is the procedure for adjusting the six sample plate temperature levels.

4.4.1 With the system turned off (External Sequencer power switch) remove the six screws holding the Sensor Electronics to its base plate and remove the cover.

4.4.2 Disconnect the two cables connecting the Heat Sink to the Sensor Electronics package.

4.4.3 With a voltmeter, monitor the DIFF. AMP. test points (upper T. E. element) located on the External Sequencer.

4.4.4 From the sensor resistance/temperature Table (Table 4-1) find the value of resistance corresponding to the desired temperature for the upper thermoelectric element of the sample plate.

NOTE: The resistance values given in Table 4-1 are nominal (± 5%). The measured resistance of the 6 upper and six lower temperature sensors at 25° C and 0° C are given in Table 4-2. Table 4-3 gives the ratio of 0° C resistance to set point temperature resistance. From Tables 4-2 and 4-3, the value of resistance at a given sensor can be found to better than 0.2%.

4.4.5 Select a precision resistor corresponding to the value chosen in item 4.4.4 (alternately a precision decade resistance box may be preset to this value). Connect the resistor (or decade box) across sockets 1 and 26 (for position No. 1) of the connector (with sockets) on the Sensor Electronics Package formerly used to connect this package with the Heat Sink.

4.4.6 Set the External Sequencer to the "Manual" mode of operation and select the desired position.

4.4.7 Turn on the External Sequencer thereby energizing both the External Sequencer and Sensor Electronics Package.

4.4.8 Adjust the upper trim potentiometer located at the transistor heat sink until the voltmeter reads approximately zero volts. The resolution of the trim potentiometer is such that the closest achievable zero level may be plus or minus a few volts. This is adequate since the system gain is such that a one ohm change is equivalent to a 3.2 volt change at the differential amplifier test point.

4.4.9 Turn the External Sequencer off and repeat steps 4.4.4 through 4.4.8 for all upper and lower thermoelectric elements from position 1 through 6.

TEMP. °C	RES. OHMS	TEMP. °C	RES. OHMS	TEMP. °C	RES. OHMS	TEMP. °C	RES. OHMS
-60	228.54	-8	292.16	+44	368.13	+96	493.87
-58	230.75	-6	294.87	+46	371.24	+98	456.53
-56	232.97	-4	297.59	+48	374.35	+100	459.98
-54	235.21	-2	300.34	+50	377.48	+102	463.45
-52	237.48	0	303.10	+52	380.62	+104	466.93
-50	239.77	+2	305.91	+54	383.78	+106	470.43
-48	242.08	+4	308.75	+56	386.95	+108	473.94
-46	244.39	+6	311.60	+58	390.14	+110	477.46
-44	246.73	+8	314.45	+60	393.33	+112	480.99
-42	249.09	+10	317.33	+62	396.54	+114	484.54
-40	251.47	+12	320.21	+64	399.76	+116	488.10
-38	253.87	+14	323.11	+66	402.99	+118	491.67
-36	256.29	+16	326.02	+68	406.24	+120	495.26
-34	258.73	+18	328.94	+70	409.51	+122	498.86
-32	261.18	+20	331.88	+72	412.78	+124	502.47
-30	263.66	+22	334.82	+74	416.07	+126	506.09
-28	266.15	+24	337.79	+76	419.37		
-26	268.67	+26	340.76	+78	422.68		
-24	271.20	+28	343.75	+80	426.01		
-22	273.75	+30	346.75	+82	429.35		
-20	276.33	+32	349.77	+84	432.70		
-18	278.92	+34	352.79	+86	436.06		
-16	281.53	+36	355.84	+88	439.44		
-14	284.16	+38	358.89	+90	442.84		
-12	286.81	+40	361.96	+92	446.24		
-10	289.48	+42	365.04	+94	449.65		

Table 4-1 Nominal Sensor Resistance vs. Temperature

	UPPER		LOWER	
POSITION	+25°C OHMS	0°C OHMS	+25°C OHMS	0°C OHMS
1	335.4	299.64	335.6	299.82
2	336.4	300.53	336.5	300.62
3	336.2	300.35	336.2	300.35
4	336.5	300.62	336.5	300.62
5	335.5	299.73	335.5	299.73
6	335.2	299.46	335.2	299.46

Table 4-2 Measured Resistance - Temperature Sensors

TEMP. °C	RATIO	TEMP. °C	RATIO	TEMP. °C	RATIO	TEMP. °C	RATIO
-60	0.75402	-10	0.95505	+40	1.19418	+90	1.46102
-58	0.76130	-8	0.96392	+42	1.20434	+92	1.47225
-56	0.76864	-6	0.97285	+44	1.21454	+94	1.48352
-54	0.77605	-4	0.98184	+46	1.22478	+96	1.49484
-52	0.78352	-2	0.99089	+48	1.23507	+98	1.50620
-50	0.79105	0	1.00000	+50	1.24540	+100	1.51760
-48	0.79865	+2	1.00930	+52	1.25577	+102	1.52904
-46	0.80631	+4	1.01864	+54	1.26619	+104	1.54053
-44	0.81403	+6	1.02803	+56	1.27665	+106	1.55206
-42	0.82182	+8	1.03746	+58	1.28715	+108	1.56364
-40	0.82967	+10	1.04693	+60	1.29770	+110	1.57526
-38	0.83758	+12	1.05645	+62	1.30828	+112	1.58692
-36	0.84556	+14	1.06601	+64	1.31891	+114	1.59862
-34	0.85360	+16	1.07561	+66	1.32958	+116	1.61036
-32	0.86170	+18	1.08525	+68	1.34030	+118	1.62215
-30	0.86987	+20	1.09494	+70	1.35106	+120	1.63398
-28	0.87810	+22	1.10467	+72	1.36186	+122	1.64586
-26	0.88640	+24	1.11444	+74	1.37271	+124	1.65778
-24	0.89476	+26	1.12426	+76	1.38360	+126	1.66974
-22	0.90318	+28	1.13412	+78	1.39453		
-26	0.91167	+30	1.14402	+80	1.40550		
-18	0.92022	+32	1.15397	+82	1.41652		
-16	0.92883	+34	1.16396	+84	1.42758		
-14	0.93751	+36	1.17399	+86	1.43868		
-12	0.94625	+38	1.18406	+88	1.44983		

Table 4-3 Resistance Ratio Table ($R_T = R_O$ x Ratio)
(R_O = Resistance @ 0°C)

The following are the connector socket numbers which the calibration resistors should shut for each position.

Position	Upper	Lower
1	26-1	13-15
2	26-3	13-17
3	26-5	13-19
4	26-7	13-20
5	26-9	13-22
6	26-11	13-24

4.4.10 In all cases, the upper thermoelectric element should be adjusted to a larger temperature difference relative to the heat sink than the lower element. In addition, the set point temperature difference between upper and lower elements should not be less than 3° K.

4.5 MONITOR POWER LEVEL

The power applied to the upper and lower thermoelectric elements can be monitored with a voltmeter at the test points provided on the External Sequencer. The output voltage levels are 3.19 MV per ampere of thermoelectric drive current. A minus reading indicates cooling and a positive reading indicates heating. The full power point for an upper thermoelectric element is -26MV (cooling) and +14 MV (heating). The full power point for a lower thermoelectric element is -38 MV (cooling) and +20 MV (heating). These power levels will vary with thermoelectric temperature.

4.6 INSTALLATION OF SAMPLE HOLDERS

Six copper sample holders are provided. These holders can be mounted on the upper heat sink by first removing the heat shield and then screwing down the holder on the appropriate upper heat sink.

APPENDIX I

THERMAL ANALYZER COMPUTER PROGRAM

The Thermal Analyzer Computer Program is the generalized 3-dimensional heat ransfer program utilized to analyze the transient characteristics of the IHFSU.

The transient heat transfer solution is obtained by converting the physical system into one consisting of lumped thermal capacities connected by thermal resistors, and then using the lumped parameter, or finite differences, approach to solve for the temperature history of the system. This solution although discontinuous in space and time, results in any desired degree of accuracy by proper selection of lump size and computing interval within certain limitations.

This program requires a MAIN program and several subroutines which describe the mode of heat transfer at any node. An additional subroutine is required by the program which is written in Fortran IV by the user. The routine called FUNCT allows the user to set up any type of heat transfer relations desired, e. g. heat inputs, radiating areas, variable resistors and capacitors.

The FUNCT routine for the Thermal Analyzer model of the IHFSU is shown in Figure 5-1.

Figure 5-2 presents the input data required to run the Thermal Analyzer model.

The first block of data (each block of data is separated by NBK on the left) are the initial temperatures in ^{o}F for all capacitors (1 through 59). The last value represents a dummy node simulating the temperature of space (-460 ^{o}F).

The next data block are the values for the conduction resistors. These are given by

$$R = \frac{L}{kA}$$

where:

L - path length between nodes parallel to the heat flow, ft
k - thermal conductivity of the node, BTU/hr - ft - ^{o}F
A - the cross-sectional area perpendicular to the heat flow, ft^2

The following set of resistors are the radiation resistors and variable conduction resistors. There are no resistance values given for these resistors, since they are designated in the FUNCT subroutine.

The values for thermal capacitance follow the NBK card. The thermal capacitance is given by

$$C = \rho C_p A \delta$$

where:

ρ - density, Lb/ft^3
C_p - specific heat, BTU/Lb - ^{o}F
A - area of the node, ft^2
δ - thickness of the node, ft

The tables which designate the heat flux, inputs, thermoelectric emf, thermal conductance, and electrical resistance are given in the next data block. The following is a description of each table:

Table #1 - Thermoelectric switching table, from time 0 to 0.0001 hr. the thermoelectric unit is "off" 0.00005 hr. later the unit is turned "on".

Table #2 - Thermoelectric emf or Seebeck coefficient as a function of temperature (^oK).

Table #3 and 4 - Thermal conductance variation with temperature (^oK)

Table #5 and 6 - Electrical resistance as a function of temperature (^oK)

Table #7 - Environmental heat flux input as a function of time; this shows a constant heat input from 0 to 100 hrs.

Table #8 - The 2 watt heat input to the sample plate as a function of time (constant)

Table #9 - Number of Lower modules (couples) as a function of time (time is a dummy independent variable)

The last data gives the print interval, final time and initial time of the problem.

The main deck for this program and user's manual can be obtained from NASA - Houston. The program was developed by Lockheed - California Co. for NASA. The contact at NASA - Houston is:

Mr. C. E. Parker
Computation & Analysis Division
Engineering Application Branch
Mail Code, ED24
Manned Space Flight Center
Houston, Texas

A computer tape must be sent to Mr. Parker and the complete source deck of the program will be sent.

```
        FUNC                                                              02/14/66
      EXTERNAL FORMULA NUMBER    -    SOURCE STATEMENT     -     INTERNAL FORMULA NU


   SUBRCUTINE FUNCT
   CCMMCN P,M
   DIMENSICN P(15000),M(16),TN(1),T(1),R(1),C(1),Q(1),RC(1)
   EQUIVALENCE (P(1),TN(1)),
  1(P(61),T(1)),
  2(P(121),R(1)),
  3(P(238),C(1)),
  4(P(297),Q(1)),
  5(P(356),RC(1))
   PEAL M,LIN
:NVIRCNMENTAL  HEAT INPUT, 300 N. M. CIRCULAR ORBIT
Z-93 COATING, AREA =          SQ. FT.
   DC 100  NODE = 1,7
   NCD1 = NCDE + 14      ABSORBING AREA PER NODE
   NCD2 = NCDE + 28
   Q(NODE) = 0.02857 * LIN(M(1),7) }
   Q(NOD1) = 0.02857 * LIN(M(1),7) }  ENVIRONMENTAL HEAT INPUT
   Q(NOD2) = 0.02857 * LIN(M(1),7) }        TO BASE PLATE
00 CCNTINUE
   DC 200 NCDE = 1,7,2
   NCD3 = NCDE + 7
   NCD4 = NCDE + 21
   Q(NOD3) = 0.02857 * LIN(M(1),7) }  ENVIRONMENTAL HEAT INPUT
   Q(NOD4) = 0.02857 * LIN(M(1),7) }        TO BASE PLATE
00 CCNTINUE

NVIRCNMENTAL HEAT INPUT TO EACH SAMPLE , Q =  2 WATTS
   Q(39)  = 0.01076 * LIN(M(1),8)
   Q(43)  = 0.01076 * LIN(M(1),8)
   Q(47)  = 0.01076 * LIN(M(1),8)
   Q(51)  = 0.01076 * LIN(M(1),8)
   Q(55)  = 0.01076 * LIN(M(1),8)
   Q(59)  = 0.01076 * LIN(M(1),8)   UNIT CONVERSION FACTOR
   XN1 = LIN(M(1),9)                NUMBER OF LOWER COUPLES
   R(60) = 1.0 /(XN1 *1.8972*LIN(((T(36)-32.0)*0.555)+273.C),4)) }
   R(64) = 1.0 /(XN1 *1.8972*LIN(((T(40)-32.0)*0.555)+273.C),4)) }
   R(68) = 1.0 /(XN1 *1.8972*LIN(((T(44)-32.0)*0.555)+273.C),4)) }
   R(72) = 1.0 /(XN1 *1.8972*LIN(((T(48)-32.0)*0.555)+273.C),4)) }
   R(76) = 1.0 /(XN1 *1.8972*LIN(((T(52)-32.0)*0.555)+273.C),4)) }  THERMAL
   R(80) = 1.0 /(XN1 *1.8972*LIN(((T(56)-32.0)*0.555)+273.C),4)) }   RESISTANCE
   R(61) = 1.0 /(15.0*1.8972*LIN(((T(37)-32.0)*0.555)+273.C),3)) }     OF
   R(65) = 1.0 /(15.0*1.8972*LIN(((T(41)-32.0)*0.555)+273.C),3)) }  THERMO ELECTRIC
   R(69) = 1.0 /(15.0*1.8972*LIN(((T(45)-32.0)*0.555)+273.C),3)) }     UNIT
   R(73) = 1.0 /(15.0*1.8972*LIN(((T(49)-32.0)*0.555)+273.C),3)) }
   R(77) = 1.0 /(15.0*1.8972*LIN(((T(53)-32.0)*0.555)+273.C),3)) }
   R(81) = 1.0 /(15.0*1.8972*LIN(((T(57)-32.0)*0.555)+273.C),3)) }
   RESIL = LIN(((T(36)-32.0)*0.555)+273.0),6) }  NUMBER OF UPPER COUPLES
   RESIU = LIN(((T(38)-32.0)*0.555)+273.0),5) }  LOWER & UPPER ELECTRICAL RESISTANCE
   QPCWEL = LIN(((T(36)-32.0)*0.555)+273.0),2) }  LOWER & UPPER T/E SEEBECK
   QPCWEU = LIN(((T(38)-32.0)*0.555)+273.0),2) }        COEFFICIENTS
HERMCELECTRIC HEAT INPUT TO THE HOT SIDE JUNCTION OF THE LOWER MODULE
   Q(36) = 3.415*(QPOWEL*36.0*XN1 *((((T(36)-32.0)*0.555)+273.0)  -
  1 (((T(37)-32.0)*0.555)+273.0)) + XN1 *(36.0**2)*RESIL)
  2   * LIN(M(1),1)
ET HEAT TO THE HOT-COLD SIDE INTERFACE OF THE UPPER AND LOWER MCDULES
```

Source Listing of FUNCT Subroutine

Figure 5-1

```
      FUNC                                                              02/14/66
   EXTERNAL FORMULA NUMBER   -   SOURCE STATEMENT   -   INTERNAL FORMULA NU

   Q(37) = 3.415*(QPOWEU*8.5*15.0*((((T(37)-32.0)*0.555)+273.0) -
  1 (((T(38) - 32.0)*0.555) + 273.0)) +   15.0*
  2 (8.5**2)*RESIU - QPOWEL*36.0*(((T(37)-32.0)*0.555)+273.C)*XN1
  3          +0.5*(36.0**2)*RESIL*XN1)           * LIN(M(1),1)
THFRMCELECTRIC HEAT OUT OF THE COLD SIDE JUNCTION OF THE UPPER MCDULE
   Q(38) = - 3.415*(QPOWEU*8.5*(((T(38)-32.0)*0.555)+ 273.0)*15.0 -
  1  15.0* 0.5*(8.5**2)*RESIU)*LIN(M(1),1)
 RADIATING  AREA  =        SQ. FT.
    DC 400 I =1,7
    IR  =  I + 82                 RADIATING AREA PER NODE
    IR1 = I + 96
    IR2 = I + 110                   EMISSIVITY OF BASE PLATE
    R(IR) = RAD(I,60,0.02857*0.92)
    R(IR1) = RAD(I+14,60,0.02857*0.92)  BASE PLATE RADIATION RESISTORS
    R(IR2) = RAD(I+28,60,0.02857*0.92)
400 CCNTINUE
    DC 300 II = 1,7,2
    IR3 = II + 89
    IR4 = II + 103
    R(IR3) = RAD(II+7,60,0.02857*0.92)  BASE PLATE RADIATION RESISTORS
    R(IR4) = RAD(II+22,60,0.02857*0.92)
300 CCNTINUE                  RADIATING AREA x EMISSIVITY OF SAMPLE PLATE
    R(91) =  RAD(39,60,0.01076)
    R(93) =  RAD(43,60,0.01076)
    R(95) =  RAD(47,60,0.01076)    SAMPLE PLATE RADIATION RESISTORS.
    R(105) = RAD(59,60,0.01076)
    R(107) = RAD(55,60,0.01076)
    R(109) = RAD(51,60,0.01076)
    RETURN
    END
```

Figure 5-1 (Cont'd)

```
ISOTHERMAL HEAT FLUX SENSING UNIT, RON CANNIZZARO,
EC01   170.0                    INITIAL TEMPERATURES, °F             1001
NC      10.0       58                                                 1002
EC01   60-460.0                                                       1003
BK                                                                    1004
EC01     1    1    20.68571
NC       1    1    10.0          5
EC01     7    8    90.68571
NC       1    1    10.0          5
EC01    13   15   160.68571
NC       1    1    10.0          5
EC01    19   22   230.68571
NC       1    1    10.0          5
EC01    25   29   300.68571
NC       1    1    10.0          5
EC01    31    1    80.68571                          CONDUCTION
NC       1    1    10.0          6
EC01    38    8   150.68571                            RESISTORS
NC       1    1    10.0          6                   & CONNECTION
EC01    45   15   220.68571                              NUMBERS
NC       1    1    10.0          6                   OF BASE PLATE
EC01    52   22   290.68571
NC       1    1    10.0          6
EC01    59    9   360.027659
NC       4    2    40.0          2
EC02    71   27   480.027659    75    25    520.027659
EC01    79   23   560.027659
EC01    60   36   370.0
NC       4    4    40.0          5                   CONDUCTION
EC01    61   37   380.0                                RESISTORS &
NC       4    4    40.0          5                   CONNECTION NUMBERS
EC01    62   38   39 0.01383                           FOR T/E UNITS
NC       4    4    4 0.0         5
EC01    83    1   600.0
NC       1    1    00.0          6
EC01    90    8   600.0
NC       2    2    00.0          3
EC01    91   39   600.0                                 RADIATION
NC       2    4    00.0          2                        RESISTOR NUMBERS
EC01    97   15   600.0                                   & CONNECTION
NC       1    1    00.0          6                          NUMBERS
EC01   104   22   600.0
NC       2    2    00.0          3
EC02   105   59   600.0         107   55    600.0
EC01   109   51   600.0
EC01   111   29   600.0
NC       1    1    00.0          6
BK
EC01     1 0.02392                           THERMAL
NC      10.0           6                       CAPACITORS            3002
EC01     8 0.02392
NC      20.0           3                                              3004
EC03     9 0.02392     11 0.02392     13 0.02392
EC01    15 0.02392
NC      10.0           6                                              3007
EC01    22 0.02392
NC      20.0           3                                              3009
EC03    23 0.02392     25 0.02392     27 0.02392
EC01    29 0.02392
NC      10.0           6                                              3012
```

Input Deck Listing for Thermal Analyzer Program

Figure 5-2

```
ISCTHERMAL HEAT FLUX SENSING UNIT, RON CANNIZZARO,
EC01  360.005376                    THERMAL  CAPACITORS                  3013
NC      40.0            5                                                3014
EC01   370.008919                                                        3015
NC      40.0            5                                                3016
EC01   380.008919                                                        3017
NC      40.0            5                                                3018
EC01   390.0044597                                                       3019
NC      40.0            5                                                3020
BK                                                   TABLES              3021
EC        1       THERMOELECTRIC "SWITCHING" TABLE                       40C1
EC050.0       0.0        0.0001    0.0        0.00015
EC041.0       100.0      1.0       0.0                                   40C3
EC       -1                                                              40C4
EC        2       THERMOELECTRIC POWER, BOTH MODULES, DEG. K ***
EC05 150.0    0.00026    200.0     0.000338   250.0      Volts /°K /couple
EC05 0.000389 300.0      0.00044   350.0      0.000503
EC03 400.0    0.00058    0.0
EC       -2
EC        3       THERMAL CONDUCTANCE, UPPER MODULE, DEG. K      WATTS/°K /couple
EC05 150.0    0.0063464  200.0     0.00543307 250.0
EC05 0.004755 300.0      0.00441   350.0      0.0042
EC03 400.0    0.004      0.0
EC       -3
EC        4       THERMAL CONDUCTANCE, LOWER MODULE, DEG. K      WATTS/°K /Couple
EC05 150.0    0.039665   200.0     0.033956   250.0

EC05 0.029724 300.0      0.027756  350.0      0.026
EC03 400.0    0.0248     0.0
EC       -4
EC        5       ELECTRICAL RESISIVITY, UPPER MODULE, DEG. K    Ω /couple
EC05 150.0    0.0051181  200.0     0.0076136  250.0
EC05 0.0103314300.0      0.013684  350.0      0.0175
EC03 400.0    0.0184     0.0
EC       -5
EC        6       ELECTRICAL RESISIVITY, LOWER MODULE, DEG. K    Ω /couple
C05 150.0     0.0008188  200.0     0.00121818250.0
C05 0.001653  300.0      0.0021895 350.0      0.0029
C03 400.0     0.0036     0.0
C        -6
C         7       HEAT FLUX FOR 300NM ORBIT, Z-93 COATING
C05 0.0        158.05    100.0     158.05     0.0    {α(S+A) + εE}  BTU/hr-ft²
C        -7
C         8       2 WATTS HEAT INPUT TO SAMPLE PLATE
C05 0.0        634.795   100.0     634.795    0.0      BTU/hr
C        -8
C         9       NUMBER OF LOWER MODULES, N1 = 20
C05 0.0        20.0       100.0     20.0       0.0
C        -9
K                                                                        40C5
C010.005555  HRS          BLOCK 5           PRINT INTERVAL               50C1
C010.12      HRS                            FINAL TIME                   50C2
C010.0                                      INITIAL TIME                 50C3
K                                                                        50C7
```

Figure 5-2 (Cont'd)

LIST OF REFERENCES

1. Ioffe, A. F.; Semiconductor Thermoelements and Thermoelectric Cooling; Infosearch Limited, London, 1957.

2. Tim, W. M., Fitzke, E. V. and Rosi, F:D; Thermoelectric Properties Of Bi_2 Te_3 - Sb_2 Te_3 - Sb_2 Se_3 Pseudoternary Alloys in The Temperature Range [illegible] 300° K, Journal of Materials Science Volume 1, Pages 52-56, 1966.