View metadata, citation and similar papers at core.ac.uk
brought to you by CORE
provided by Elsevier - Publisher Connector

ACADEMIC PRESS
Available at WWW.MATHEMATICSWEB.ORG POWERED BY SCIENCE DIRECT
Advances in Applied Mathematics 30 (2003) 295–342
ADVANCES IN Applied Mathematics
www.elsevier.com/locate/aam

Residue formulae for vector partitions and Euler–MacLaurin sums

András Szenes [a,*] and Michèle Vergne [b]

[a] *Department of Geometry, Mathematical Institute of the Budapest, Technical University, 1111 Budapest, Hungary*
[b] *Centre de Mathématiques, École Polytechnique, F-91128 Palaiseau cedex, France*

Received 16 November 2001; accepted 8 April 2002

0. Introduction

Let V be an n-dimensional real vector space endowed with a rank-n lattice Γ. The dual lattice $\Gamma^* = \mathrm{Hom}(\Gamma.\mathbb{Z})$ is naturally a subset of the dual vector space V^*. Let $\Phi = [\beta_1, \beta_2, \ldots, \beta_N]$ be a sequence of not necessarily distinct elements of Γ^*, which span V^* and lie entirely in an open halfspace of V^*. In what follows, the order of elements in the sequence will not matter.

The closed cone $C(\Phi)$ generated by the elements of Φ is an acute convex cone, divided into open conic chambers by the $(n-1)$-dimensional cones generated by linearly independent $(n-1)$-tuples of elements of Φ. Denote by $\mathbb{Z}\Phi$ the sublattice of Γ^* generated by Φ. Pick a vector $a \in V^*$ in the cone $C(\Phi)$, and denote by $\Pi_\Phi(a) \subset \mathbb{R}_+^N$ the convex polytope consisting of all solutions $\mathbf{x} = (x_1, x_2, \ldots, x_N)$ of the equation $\sum_{k=1}^N x_k\beta_k = a$ in *nonnegative real* numbers x_k. This is a closed convex polytope called the *partition polytope* associated to Φ and a. Conversely, any closed convex polytope can be realized as a partition polytope.

If $\lambda \in \Gamma^*$, then the vertices of the partition polytope $\Pi_\Phi(\lambda)$ have rational coordinates. We denote by $\iota_\Phi(\lambda)$ the number of points with integral coordinates in $\Pi_\Phi(\lambda)$. Thus $\iota_\Phi(\lambda)$ is the number of solutions of the equation $\sum_{k=1}^N x_k\beta_k = \lambda$ in *nonnegative integers* x_k. The function $\lambda \mapsto \iota_\Phi(\lambda)$ is called the *vector partition function* associated to Φ. Obviously, $\iota_\Phi(\lambda)$ vanishes if λ does not belong to $C(\Phi) \cap \mathbb{Z}\Phi$.

* Corresponding author.
E-mail addresses: szenes@math.bme.hu (A. Szenes), vergne@daphne.math.polytechnique.fr (M. Vergne).

0196-8858/02/$ – see front matter © 2002 Elsevier Science (USA). All rights reserved.
doi:10.1016/S0196-8858(02)00538-9

Let $\mathrm{EP}(\mathbb{R}^N)$ be the ring of complex functions on $\mathbb{R}^N$ generated by exponentials and polynomials. Thus any $f \in \mathrm{EP}(\mathbb{R}^N)$ is of the form

$$f(\mathbf{x}) = \sum_{j=1}^{m} \mathrm{e}^{\langle \mathbf{y}_j, \mathbf{x}\rangle} P_j(\mathbf{x}),$$

where $\mathbf{y}_1, \dots, \mathbf{y}_m \in \mathbb{C}^N$, and the functions $P_1, \dots, P_m$ are polynomials with complex coefficients. If the elements $\{\mathbf{y}_j, 1 \leqslant j \leqslant m\}$ are such that there exists an integer M with $M\mathbf{y}_j \in 2\pi \mathrm{i}\mathbb{Z}^N$, then the function f is said to be *periodic-polynomial* (or sometimes *quasipolynomial*). The restriction of such a function to any coset $\mathbf{x} + M\mathbb{Z}^N$ of $\mathbb{Z}^N/M\mathbb{Z}^N$ is plainly polynomial.

A generalization of $\iota_\Phi(\lambda)$ is the sum of the values of a function $f \in \mathrm{EP}(\mathbb{R}^N)$ over the integral points of $\Pi_\Phi(\lambda)$:

$$\mathcal{S}[f, \Phi](\lambda) = \sum_{\xi \in \Pi_\Phi(\lambda) \cap \mathbb{Z}^N} f(\xi).$$

Indeed, if $f = 1$, the function $\mathcal{S}[f, \Phi]$ is just the function ι_Φ. Such a sum $\mathcal{S}[f, \Phi]$ will be called an Euler–MacLaurin sum.

In this paper, we will search for "explicit" formulae for the function $\lambda \mapsto \mathcal{S}[f, \Phi](\lambda)$ on Γ^*. Let us recall some qualitative results about this function. We start with the following result of Ehrhart: for a rational polytope Π in $\mathbb{R}^r$, consider the function $k \mapsto \#(k\Pi \cap \mathbb{Z}^r)$, where $\#S$ stands for the cardinality of the set S. Ehrhart proved that this function is given by a periodic-polynomial formula for all integers $k \geqslant 0$. More precisely (see [12] and references therein), if M is an integer such that all the vertices of the polytope $M\Pi$ are in $\mathbb{Z}^r$, then there exist polynomial functions P_j, $0 \leqslant j \leqslant M-1$, such that $\#(k\Pi \cap \mathbb{Z}^r) = \sum_{j=0}^{M-1} \mathrm{e}^{2\mathrm{i}\pi jk/M} P_j(k)$. If f is a polynomial, then $\mathcal{S}[f, \Phi](\lambda)$ consists of summing up the values of a polynomial over the integral points of the rational polytope $\Pi_\Phi(\lambda)$. If f is an exponential $\mathbf{x} \mapsto \mathrm{e}^{\langle \mathbf{y}, \mathbf{x}\rangle}$, then $\mathcal{S}[\mathrm{e}^{\mathbf{y}}, \Phi](\lambda)$ is the sum $\sum_{\xi \in \Pi_\Phi(\lambda) \cap \mathbb{Z}^N} \mathrm{e}^{\langle \mathbf{y}, \xi\rangle}$; such sums were evaluated "explicitly" by M. Brion [4] and by A.I. Barvinok [3] for generic exponentials.

Assume first that Φ consists of $n = \dim V$ linearly independent vectors of Γ^*. Denote by ρ the linear isomorphism from $\mathbb{R}^n$ to V^* defined by $\rho(\mathbf{x}) = \sum_{i=1}^n x_i \beta_i$. The set $\Pi_\Phi(\lambda)$ is nonempty if and only if $\lambda \in C(\Phi) \cap \mathbb{Z}\Phi$. In this case, the set $\Pi_\Phi(\lambda)$ coincides with $\rho^{-1}(\lambda)$, and our function $\lambda \mapsto \mathcal{S}[f, \Phi](\lambda)$ on Γ^* is just the function $\lambda \mapsto f(\rho^{-1}(\lambda))$ restricted to $C(\Phi) \cap \mathbb{Z}\Phi$. In general, the map $\rho : \mathbb{R}^N \to V^*$ defined by $\rho(\mathbf{x}) = \sum_{i=1}^N x_i \beta_i$ is a surjection, and the following qualitative statement holds:

Theorem 0.1. *For each conic chamber $\mathfrak{c}$ of the cone $C(\Phi)$, there exists an exponential-polynomial function $\mathcal{P}[\mathfrak{c}, f, \Phi]$ on V^* such that for each $\lambda \in \bar{\mathfrak{c}} \cap \Gamma^*$, we have*

$$\mathcal{S}[f, \Phi](\lambda) = \mathcal{P}[\mathfrak{c}, f, \Phi](\lambda).$$

This theorem follows, for example, from [5], and there are many antecedents of this result in particular cases. The periodic-polynomial behavior of $\iota_\Phi(\lambda)$ on closures of conic

chambers of the cone $C(\Phi)$ is proved in [20]. If f is a polynomial function, then the sum $\sum_{\xi\in k\Pi} f(\xi)$ is a polynomial function of k for $k \geqslant 0$ if the vertices of Π have integral coordinates [4,8,12]. Let $\Pi_1, \Pi_2, \ldots, \Pi_N$ be rational polytopes in $\mathbb{R}^r$. For a sequence $[k_1, \ldots, k_N]$ of nonnegative integers, denote by $k_1\Pi_1 + k_2\Pi_2 + \cdots + k_N\Pi_N$ the weighted Minkowski sum of the polytopes Π_i. Then, as proved in [17], there exists an periodic-polynomial function $\mathcal{P}$ on $\mathbb{R}^N$ such that

$$\#\big((k_1\Pi_1 + k_2\Pi_2 + \cdots + k_N\Pi_N) \cap \mathbb{Z}^r\big) = \mathcal{P}(k_1, k_2, \ldots, k_N).$$

We explain in Section 3.2 how to pass from the setting of Minkowski sums to the setting of partition polytopes.

Most of the investigations of the function $\mathcal{S}[f, \Phi]$ [5,8,15], starting with the Euler–MacLaurin formula evaluating the sum $\sum_A^B f(k)$ of the values of a function f at all integral points of an interval $[A, B]$, were dedicated to the fascinating relation of $\mathcal{S}[f, \Phi](\lambda)$ with the integral of f on the polytopes $\Pi_\Phi(a)$, when a varies near λ. This relation uses Todd differential operators, which leads to a Riemann–Roch calculus for $\mathcal{S}[f, \Phi]$ initiated by Khovanskii and Pukhlikov [15]. In fact, there is a dictionary between rational polytopes and line bundles on toric varieties, which inspired these results.

Introduce the convex polytope

$$\square(\Phi) = \sum_{i=1}^{N} [0, 1]\beta_i.$$

We obtain a residue formula for $\mathcal{S}[f, \Phi]$ which implies the following qualitative result.

Theorem 0.2. *For each conic chamber $\mathfrak{c}$ of the cone $C(\Phi)$, there exists an exponential-polynomial function $\mathcal{P}[\mathfrak{c}, f, \Phi]$ on V^* such that, for each $\lambda \in (\mathfrak{c} - \square(\Phi)) \cap \Gamma^*$, we have*

$$\mathcal{S}[f, \Phi](\lambda) = \mathcal{P}[\mathfrak{c}, f, \Phi](\lambda).$$

We assumed that Φ linearly generates V^*, hence the set $\mathfrak{c} - \square(\Phi)$ contains $\bar{\mathfrak{c}}$. In particular, the function $\iota_\Phi(\lambda)$ is periodic-polynomial on the neighborhood $\mathfrak{c} - \square(\Phi)$ of the closure of the conic chamber $\mathfrak{c}$ (this neighborhood is usually much larger than $\bar{\mathfrak{c}}$, see the pictures in Appendix A). We give specific residue formulae on each of these sectors $\mathfrak{c} - \square(\Phi)$. Our main theorems are Theorem 2.3 and its various corollaries: the residue formulae of Theorem 3.1 for $\iota_\Phi(\lambda)$ and the residue formulae of Theorem 3.8 for $\mathcal{S}[f, \Phi](\lambda)$. If f is a generic exponential $\mathbf{x} \mapsto \mathrm{e}^{\langle \mathbf{y}, \mathbf{x}\rangle}$, then the residue formula of Theorem 3.7 implies that formula (3.4.1) of Brion and Vergne [5] holds on the neighborhood $\mathfrak{c} - \square(\Phi)$ of $\bar{\mathfrak{c}}$.

The residue formula makes the exponential-polynomial behavior of $\mathcal{S}[f, \Phi](\lambda)$ in each of these sectors clear. More specifically, in Section 2.2, we construct an exponential-polynomial function $E[f, \Phi]$ on the entire vector space V^* with values in a finite-dimensional vector space S, the space of *simple elements*, and linear functionals $J_\mathfrak{c} : S \to \mathbb{C}$ depending on the conic chamber $\mathfrak{c}$, such that $\mathcal{S}[f, \Phi](\lambda) = \langle J_\mathfrak{c}, E[f, \Phi](\lambda)\rangle$ for λ in a specified neighborhood of the chamber $\mathfrak{c}$ depending on f and containing $\mathfrak{c} - \square(\Phi)$.

Moreover, from the comparison with the Jeffrey–Kirwan expression for the volume of $\Pi_\Phi(a)$, which is given by a very similar residue formula on each conic chamber (cf. [2]), one immediately obtains the Riemann–Roch formula of [5,8,15] for $\mathcal{S}[f,\Phi]$.

Conversely, applying Todd operators to the Jeffrey–Kirwan residue expression, we could deduce our main theorem from [8] or [5]. However, our present result is an explicit formula which holds on a region larger than $\bar{\mathfrak{c}}$, and the path followed in the present article to obtain this result is direct. Furthermore, our result has the advantage that it provides independent and very similar residue formulae for volumes and for Ehrhart polynomials of polytopes. These computations are quite efficient: we give a few illustrative examples in Appendix A. We refer to [2] for examples of calculations of volumes by residue methods and examples of application of change of variables in residue for expressions of Ehrhart polynomials.

Our method is based on a detailed study of the generating function

$$\frac{1}{\prod_{k=1}^{N}(1-\mathrm{e}^{\beta_k})}$$

for the partition function or, more generally, of periodic meromorphic functions with poles on an affine arrangement of hyperplanes. As a main tool, we will use a separation theorem due to the first author [21]. We review these results in Section 1.

As stated before, the equation $\mathcal{S}[f,\Phi](\lambda)=\mathcal{P}[\mathfrak{c},f,\Phi](\lambda)$ holds for λ belonging to a specified "neighborhood" of $\mathfrak{c}$, which, in general, is strictly larger than $\bar{\mathfrak{c}}$. This neighborhood depends on f and Φ. As a result the polynomials $\mathcal{P}[\mathfrak{c},f,\Phi](\lambda)$ for two neighboring chambers will coincide along a thick strip near their common boundary. We illustrate our residue formula and this effect with an example here.

Example 1. We set $V^*=\mathbb{R}^2$ with standard basis vectors e_1,e_2 and corresponding coordinates a_1,a_2. Let

$$\Phi_h=[e_1,e_1,\dots,e_1,e_2,e_2,\dots,e_2,e_1+e_2,e_1+e_2,\dots,e_1+e_2],$$

where each vector e_1, e_2, e_1+e_2 is repeated h-time. There are two chambers contained in $C(\Phi_h)$: $\mathfrak{c}_1=\{a_1>a_2>0\}$ and $\mathfrak{c}_2=\{a_2>a_1>0\}$.

Our residue formula in this case reduces to the following iterated residues:

$$\iota_{\Phi_h}(a_1,a_2)=\operatorname*{Res}_{z_2=0}\left(\operatorname*{Res}_{z_1=0}\left(\frac{\mathrm{e}^{a_1z_1+a_2z_2}\,\mathrm{d}z_1\,\mathrm{d}z_2}{(1-\mathrm{e}^{-z_1})^h(1-\mathrm{e}^{-z_2})^h(1-\mathrm{e}^{-(z_1+z_2)})^h}\right)\right)$$

for any $(a_1,a_2)\in S_{1,h}=\mathfrak{c}_1-\square(\Phi_h)$, while

$$\iota_{\Phi_h}(a_1,a_2)=\operatorname*{Res}_{z_1=0}\left(\operatorname*{Res}_{z_2=0}\left(\frac{\mathrm{e}^{a_1z_1+a_2z_2}\,\mathrm{d}z_1\,\mathrm{d}z_2}{(1-\mathrm{e}^{-z_1})^h(1-\mathrm{e}^{-z_2})^h(1-\mathrm{e}^{-(z_1+z_2)})^h}\right)\right)$$

for any $(a_1,a_2)\in S_{2,h}=\mathfrak{c}_2-\square(\Phi_h)$.

Pictures of the chambers and of the sets $\square(\Phi_h)$, $S_{1,h}$, $S_{2,h}$, $S_{1,h}\cap S_{2,h}$ are given on Figs. 4–8 in Appendix A.

Let us give the explicit result for $h = 3$. We denote by $\iota[\mathfrak{c}, \Phi_3]$ the polynomial function of (a_1, a_2), which coincides with the vector partition function ι_{Φ_3} on the chamber $\mathfrak{c}$.

The function $\iota[\mathfrak{c}_1, \Phi_3]$ is equal to

$$\frac{1}{14}\binom{a_2+5}{5}\bigl(7a_1^2 - 7a_1a_2 + 2a_2^2 + 21a_1 - 9a_2 + 14\bigr),$$

so it vanishes along the lines $a_2 = -1, -2, -3, -4, -5$. By symmetry, the function

$$\iota[\mathfrak{c}_2, \Phi_3] = \frac{1}{14}\binom{a_1+5}{5}\bigl(2a_1^2 - 7a_1a_2 + 7a_2^2 - 9a_1 + 21a_2 + 14\bigr)$$

vanishes along the lines $a_1 = -1, -2, -3, -4, -5$. These vanishing properties may be deduced from the Ehrhart reciprocity Theorem. Our results show that the functions $\iota[\mathfrak{c}_1, \Phi_3]$ and $\iota[\mathfrak{c}_2, \Phi_3]$ coincide on the integral points in $S_{1,h} \cap S_{2,h}$. Indeed, we have

$$\iota[\mathfrak{c}_1, \Phi_3] - \iota[\mathfrak{c}_2, \Phi_3] = \frac{1}{14}\binom{a_1-a_2+2}{5}\bigl(2a_1^2 + 3a_1a_2 + 2a_2^2 + 21a_1 + 21a_2 + 59\bigr),$$

thus the two polynomial functions $\iota[\mathfrak{c}_1, \Phi_3]$ and $\iota[\mathfrak{c}_2, \Phi_3]$ coincide along the lines $a_1 - a_2 = -2, -1, 0, 1, 2$.

1. Partial fraction decompositions

1.1. Complex hyperplane arrangements

Let E be a n-dimensional complex vector space. If $\alpha \in E^*$ is a nonzero linear form on E, then we denote by H_α the hyperplane $\{z \in E \mid \langle \alpha, z\rangle = 0\}$.

An *arrangement* $\mathcal{A}$ of hyperplanes in E is a finite collection of hyperplanes. Thus one may associate an arrangement $\mathcal{A}(\Delta)$ to any finite subset $\Delta \subset E^*$ of nonzero linear forms; this arrangement consists of the set of hyperplanes H_α, where α varies in Δ. Conversely, given an arrangement $\mathcal{A} = \{H_1, \dots, H_N\}$ of hyperplanes, we choose for each hyperplane $H_i \in \mathcal{A}$ a linear form $\alpha_i \in E^*$ such that $H_i = H_{\alpha_i}$. Note that such a linear form α_i is defined only up to proportionality.

We will call a set $\{H_i\}_{i=1}^m$ of m hyperplanes in E *independent* if $\dim \bigcap H_i = n - m$. This is equivalent to saying that the corresponding linear forms are linearly independent. We will say that an hyperplane L_0 is *dependent* on an arrangement $\{L_i\}_{i=1}^R$, if the linear form α_0 defining L_0 can be expressed as a linear combination of the forms α_i $(1 \leqslant i \leqslant R)$ defining L_i. An arrangement $\mathcal{A} = \{H_1, \dots, H_N\}$ is called *essential* if $\bigcap_i H_i = \{0\}$. Writing $\mathcal{A} = \mathcal{A}(\Delta)$, this condition means that the set of vectors Δ generates E^*.

Let $\mathcal{A} = \{H_1, \dots, H_N\}$ be an arrangement of hyperplanes and $\Delta = \{\alpha_1, \dots, \alpha_N\}$ be a set of linear forms such that $\mathcal{A} = \mathcal{A}(\Delta)$. Let us denote by $R_\mathcal{A}$ the ring of rational functions on E with poles along $\bigcup_{i=1}^N H_i$. Then each element $F \in R_\mathcal{A}$ can be written as $F = P/\prod_{i=1}^R \beta_i$, where P is a polynomial and $[\beta_1, \dots, \beta_R]$ is a sequence of elements

of Δ. The algebra $R_{\mathcal{A}}$ is $\mathbb{Z}$-graded by the degree. Denote by $\mathcal{B}(\Delta)$ the set of n-element subsets of Δ which are bases of E^*. Given $\sigma \in \mathcal{B}(\Delta)$, we can form the following elements of $R_{\mathcal{A}}$:

$$f_\sigma(z) := \frac{1}{\prod_{\alpha\in\sigma} \alpha(z)}. \tag{1.1}$$

Clearly, the vector space spanned by the functions f_σ for $\sigma \in \mathcal{B}(\Delta)$ depends only on $\mathcal{A}$.

Definition 1.1. The subspace $S_{\mathcal{A}}$ of $R_{\mathcal{A}}$ spanned by the functions f_σ, $\sigma \in \mathcal{B}(\Delta)$, is called the space of *simple elements* of $R_{\mathcal{A}}$:

$$S_{\mathcal{A}} = \sum_{\sigma\in\mathcal{B}(\Delta)} \mathbb{C} f_\sigma.$$

The vector space $S_{\mathcal{A}}$ is contained in the homogeneous component of degree $-n$ of $R_{\mathcal{A}}$. If $\mathcal{A}$ is not an essential arrangement, then the set $\mathcal{B}(\Delta)$ is empty and $S_{\mathcal{A}} = \{0\}$.

We let vectors $v \in E$ act on $R_{\mathcal{A}}$ by differentiation:

$$\partial_v f(z) := \frac{\mathrm{d}}{\mathrm{d}\epsilon} f(z+\epsilon v)\Big|_{\epsilon=0}.$$

Then the following holds [6, Proposition 7].

Theorem 1.1. *There is a direct sum decomposition*

$$R_{\mathcal{A}} = \left(\sum_{v\in E} \partial_v R_{\mathcal{A}}\right) \oplus S_{\mathcal{A}}.$$

As a corollary of this decomposition, we can define the projection map

$$\mathrm{Tres}_{\mathcal{A}} : R_{\mathcal{A}} \to S_{\mathcal{A}},$$

called the *total residue*. The following assertion is obvious.

Lemma 1.2. *Assume that $\mathcal{A}$ is a subset of $\mathcal{B}$. Then*

$$R_{\mathcal{A}} \subset R_{\mathcal{B}}, \qquad S_{\mathcal{A}} \subset S_{\mathcal{B}}.$$

Furthermore, if $f \in R_{\mathcal{A}}$, then $\mathrm{Tres}_{\mathcal{B}}(f)$ *belongs to $S_{\mathcal{A}}$ and*

$$\mathrm{Tres}_{\mathcal{B}}(f) = \mathrm{Tres}_{\mathcal{A}}(f).$$

We denote by R_{hp} the space of rational functions on E with poles along hyperplanes. In other words, R_{hp} is the union of the spaces $R_{\mathcal{A}}$ as $\mathcal{A}$ varies over all arrangements of hyperplanes in E. The preceding lemma shows that the assignment $\mathrm{Tres}\, f = \mathrm{Tres}_{\mathcal{A}}\, f$, for

$f \in R_{\mathcal{A}}$, is well defined on R_{hp}. For $f \in R_{\mathrm{hp}}$, the function Tres f is a linear combination of functions f_σ, defined in (1.1), where the set σ is a basis of E^* such that $\mathcal{A}(\sigma)$ is contained in the set of poles of f. The map Tres vanishes on the space $R_{\mathrm{hp}}(m)$ of homogeneous fractions of degree m unless $m+n=0$. In particular, if $\phi = f_\sigma P$, where P is a polynomial and σ is a basis of E^*, then the total residue of ϕ is $P(0) f_\sigma$.

The total residue also vanishes on all homogeneous elements of degree $-n$ of the form $P/\prod_{i=1}^R \beta_i$, where P is a homogeneous polynomial of degree $R-n$ and vectors $\{\beta_i\}_{i=1}^R$ do not generate E^*.

Denote by $\widehat{R}_{\mathrm{hp}}$ the space of formal meromorphic functions on E near zero, with poles along hyperplanes. In other words, any element of $\widehat{R}_{\mathrm{hp}}$ can be written as $P/\prod_{i=1}^R \beta_i$, where P is a formal power series and $[\beta_1, \dots, \beta_R]$ is a sequence of elements of E^*. The total residue extends to the space $\widehat{R}_{\mathrm{hp}}$ by defining

$$\mathrm{Tres}\left(\frac{P}{\prod_{i=1}^R \beta_i}\right) = \mathrm{Tres}\left(\frac{P_{[R-n]}}{\prod_{i=1}^R \beta_i}\right),$$

where $P_{[R-n]}$ is the homogeneous component of P of degree $R-n$.

For example, if $a \in E^*$, then the element e^a denotes the power series $\sum_{k=0}^\infty a^k/k!$ and the total residue of $\mathrm{e}^a/\prod_{i=1}^R \beta_i$ is, by definition, equal to the total residue of $a^{R-n}/((R-n)!\prod_{i=1}^R \beta_i)$. Again, this total residue vanishes if the linear forms $\{\beta_i\}_{i=1}^R$ do not span E^*.

Example 2. Consider the function

$$g(z_1, z_2) = \frac{\mathrm{e}^{z_1}}{(1-\mathrm{e}^{-z_1})(1-\mathrm{e}^{-z_2})(1-\mathrm{e}^{-(z_1-z_2)})^2}.$$

Thus we write

$$g = \frac{P}{z_1 z_2 (z_1-z_2)^2} \quad \text{with } P = \mathrm{e}^{z_1} \frac{z_1}{1-\mathrm{e}^{-z_1}} \frac{z_2}{1-\mathrm{e}^{-z_2}} \left(\frac{z_1-z_2}{1-\mathrm{e}^{-(z_1-z_2)}}\right)^2.$$

To compute the total residue of g, we need the term of degree 2 in the expansion of P at the origin. This is $P_{[2]} := 3z_1^2 - \frac{13}{12} z_1 z_2$. Then

$$\frac{P_{[2]}}{z_1 z_2 (z_1-z_2)^2} = \frac{23}{12} \frac{1}{(z_1-z_2)^2} + 3 \frac{1}{z_2(z_1-z_2)}.$$

The total residue of the first fraction is equal to 0, and we obtain the answer

$$\mathrm{Tres}\, g = \frac{3}{z_2(z_1-z_2)}.$$

The following statements follow from the discussion above. We will use them later.

Lemma 1.3. *Consider the meromorphic function F on E expressed as*

$$F(z) = \frac{\mathrm{e}^{\langle a,z\rangle}}{\prod_{i=1}^{N}(1 - u_i \mathrm{e}^{-\langle \beta_i, z\rangle})},$$

where $[\beta_1, \dots, \beta_N]$ is a sequence of elements of E^* and the coefficients u_i, $i = 1, \dots, N$, are nonzero complex numbers. Then

- $\operatorname{Tres} F = 0$ *if those β_j for which $u_j = 1$ do not span E^*.*
- *If the set $\sigma = \{\beta_j \mid u_j = 1\}$ forms a basis of E^*, then*

$$(\operatorname{Tres} F)(z) = \frac{1}{\prod_{\beta_j \in \sigma} \langle \beta_j, z\rangle} \frac{1}{\prod_{\beta_k \notin \sigma}(1 - u_k)}.$$

1.2. Rational hyperplanes arrangements

Let V be a real vector space of dimension n. For $\alpha \in V^*$, we denote by $H_\alpha = \{v \in V \mid \langle \alpha, v\rangle = 0\}$, this time, the real hyperplane determined by α.

Again, let Γ be a rank-n lattice in V and denote by $\Gamma^* \subset V^*$ the dual lattice. This means that if $\alpha \in \Gamma^*$ and $\gamma \in \Gamma$, then $\langle \alpha, \gamma\rangle \in \mathbb{Z}$. We denote by $\mathbb{C}[\Gamma^*]$ the ring of functions on $V_\mathbb{C}$ generated by the exponential functions $z \mapsto \mathrm{e}^{\langle \xi, z\rangle}$, $\xi \in \Gamma^*$.

Definition 1.2. An arrangement $\mathcal{A}$ of real hyperplanes in V is *Γ-rational* if $\mathcal{A} = \mathcal{A}(\Delta)$ for some finite subset Δ of Γ^*. We simply say that $\mathcal{A}$ is *rational* if Γ has been fixed.

Given a rational arrangement $\mathcal{A} = \{H_1, \dots, H_N\}$ of hyperplanes, for each hyperplane $H_i \in \mathcal{A}$ we choose a linear form $\alpha_i \in \Gamma^*$ such that $H_i = H_{\alpha_i}$. If $H_\alpha = H_\beta$ with both α and β in Γ^*, then α and β are proportional with a *rational* coefficient of proportionality.

For any $u \in \mathbb{C}^*$, $\alpha \in \Gamma^*$, consider the meromorphic function on $V_\mathbb{C}$ defined by

$$g[\alpha, u](z) = \frac{1}{1 - u\mathrm{e}^{\langle \alpha, z\rangle}}.$$

If $u = \mathrm{e}^a$ with $a \in \mathbb{C}$, then the set of poles of the function $g[\alpha, u]$ is the set $\{z \in V_\mathbb{C} \mid \langle \alpha, z\rangle + a \in 2\mathrm{i}\pi\mathbb{Z}\}$.

Definition 1.3. We denote by M^Γ the ring of meromorphic functions on $V_\mathbb{C}$ generated by $\mathbb{C}[\Gamma^*]$ and by the functions $g[\alpha, u]$, where u varies in $\mathbb{C}^*$ and α in Γ^*. Given a finite subset Δ of nonzero elements of Γ^*, denote by $M^{\Gamma\Delta}$ the ring of meromorphic functions on $V_\mathbb{C}$ generated by the ring $\mathbb{C}[\Gamma^*]$ and by the meromorphic functions $g[\alpha, u]$, where u varies in $\mathbb{C}^*$ and now α is restricted to be a member of the finite set Δ.

Thus, to be explicit, a function $F \in M^{\Gamma}$ can be written, by reducing to a common denominator, as

$$F(z) = \frac{\sum_{\xi \in I} c_\xi \mathrm{e}^{\langle \xi, z\rangle}}{\prod_{k=1}^{R}(1 - u_k \mathrm{e}^{\langle \alpha_k, z\rangle})}$$

where I is a finite subset of Γ^*; $u_k, c_\xi \in \mathbb{C}^*$, and the elements α_k are in Γ^*. If in addition $\alpha_k \in \Delta$, then this function is in $M^{\Gamma\Delta}$.

If we write $z = x + \mathrm{i}y$ with $x, y \in V$, then the function $y \mapsto F(x + \mathrm{i}y)$ is periodic: $F(x + \mathrm{i}(y + 2\pi\gamma)) = F(x + \mathrm{i}y)$ for any $\gamma \in \Gamma$. Thus functions $F \in M^{\Gamma}$ induce functions on the complexified torus $V_{\mathbb{C}}/2\mathrm{i}\pi\Gamma$.

Lemma 1.4. *Let Δ and Δ' be two finite subsets of Γ^* such that $\mathcal{A}(\Delta) = \mathcal{A}(\Delta')$. Then we have $M^{\Gamma\Delta} = M^{\Gamma\Delta'}$. Thus the ring $M^{\Gamma\Delta}$ depends only on the rational hyperplane arrangement $\mathcal{A}(\Delta)$.*

Proof. Let us note the following identities:

$$\frac{1}{(1 - \mathrm{e}^{a}\mathrm{e}^{kz})} = \frac{1}{\prod_{\zeta, \zeta^k = 1}(1 - \zeta \mathrm{e}^{a/k}\mathrm{e}^{z})},$$

$$\frac{1}{1 - u\mathrm{e}^{z}} = \frac{1 + u\mathrm{e}^{z} + u^2\mathrm{e}^{2z} + \cdots + u^{(n-1)}\mathrm{e}^{(n-1)z}}{1 - u^n\mathrm{e}^{nz}},$$

$$\frac{1}{1 - u\mathrm{e}^{z}} = \frac{u^{-1}\mathrm{e}^{-z}}{u^{-1}\mathrm{e}^{-z} - 1},$$

where $n, k \in \mathbb{Z}$, and $a, u, z \in \mathbb{C}$.

These identities show that $M^{\Gamma\Delta}$ does not change if we multiply one of the elements of Δ by a nonzero integer. This implies the lemma since any two sets $\Delta, \Delta' \subset \Gamma^*$ such that $\mathcal{A}(\Delta) = \mathcal{A}(\Delta')$ may be transformed into each other by such an operation. □

Now we can give the following definition:

Definition 1.4. Let $\mathcal{A}$ be a Γ-rational hyperplane arrangement in a vector space V. Define $M^{\Gamma\mathcal{A}}$ to be the ring $M^{\Gamma\Delta}$, where $\Delta \subset \Gamma^*$ is an arbitrary subset such that $\mathcal{A} = \mathcal{A}(\Delta)$.

It is clear that, if $\mathcal{B}$ is a subset of $\mathcal{A}$, then $M^{\Gamma\mathcal{B}}$ is a subring of $M^{\Gamma\mathcal{A}}$.

1.3. Behavior at ∞

Consider a function $F \in M^{\Gamma}$. The function of the real variable $y \mapsto F(x + \mathrm{i}y)$ is $2\pi\Gamma$-periodic. In this section, we study the behavior of the function of the real variable $x \mapsto F(x + \mathrm{i}y)$ at ∞.

Let $z_0 \in V_{\mathbb{C}}$ be not a pole of F. Then, for all $v \in V$, the function $s \mapsto F(z_0 + sv)$ is well-defined when s is a sufficiently large real number.

Definition 1.5. Let $F \in M^{\Gamma}$. Assume that $z_0 \in V_{\mathbb{C}}$ is not a pole of F. Define $\square(z_0, F)$ to be the set of $\mu \in V^*$ such that for every $v \in V$, the function $s \mapsto \mathrm{e}^{s\langle\mu,v\rangle} F(z_0 + sv)$ remains bounded when s is real and tends to $+\infty$.

Example. Let $F(z) = 1/(1 - \mathrm{e}^z)$; pick $z_0 \notin 2\mathrm{i}\pi\mathbb{Z}$. Then $\square(z_0, F) = [0, 1]$. Indeed, the function $\theta(s, v) = \mathrm{e}^{s\mu v}/(1 - \mathrm{e}^{z_0+sv})$ is bounded as s tends to ∞ if and only $0 \leqslant \mu \leqslant 1$: when $v = 0$, the function $\theta(s, v)$ is the constant $1/(1 - \mathrm{e}^{z_0})$; if $v > 0$, we obtain the condition $\mu \leqslant 1$; if $v < 0$, we obtain the condition $\mu \geqslant 0$. Note that if $v \neq 0$, then, for $\mu \in]0, 1[$, the function $s \mapsto \theta(s, v)$ tends to 0 when s tends to ∞.

Definition 1.6. For two subsets A and B of a real vector space, we denote by $A + B$ their Minkowski sum:

$$A + B = \{a + b \mid a \in A,\ b \in B\}.$$

Note that the sum of convex sets is convex.

Proposition 1.5. *Let $F \in M^{\Gamma}$ be written in the form*

$$F(z) = \frac{\sum_{\xi \in I} c_\xi \mathrm{e}^{\langle\xi,z\rangle}}{\prod_{i=1}^{R}(1 - u_i \mathrm{e}^{\langle\alpha_i,z\rangle})},$$

where I is a finite subset of Γ^*, α_i are in Γ^*, and all the constants c_ξ and u_i are nonzero complex numbers. Assume that $z_0 \in V_{\mathbb{C}}$ is such that $\prod_{i=1}^{R}(1 - u_i \mathrm{e}^{\langle\alpha_i,z_0\rangle}) \neq 0$. Then

$$\square(z_0, F) = \left\{ \mu \in V^* \;\middle|\; \mu + \xi \in \sum_{i=1}^{R} [0, 1]\alpha_i \text{ for all } \xi \in I \right\}. \tag{1.2}$$

Proof. The set described on the right-hand side of (1.2) is easily seen to be contained in $\square(z_0, F)$. Indeed, let $\mu \in V^*$ be such that $\mu + \xi$ belongs to the set $\sum_{i=1}^{R}[0, 1]\alpha_i$ for all $\xi \in I$. We write $F(z) = \sum_{\xi \in I} c_\xi F_\xi(z)$ with

$$F_\xi(z) = \frac{\mathrm{e}^{\langle\xi,z\rangle}}{\prod_{i=1}^{R}(1 - u_i \mathrm{e}^{\langle\alpha_i,z\rangle})}.$$

Let us show that for each $\xi \in I$, the function $s \mapsto \mathrm{e}^{s\langle\mu,v\rangle} F_\xi(z_0 + sv)$ remains bounded when s tends to ∞. We have $\mu + \xi = \sum_{i=1}^{R} t_i\alpha_i$ with $0 \leqslant t_i \leqslant 1$ and we may write $\mathrm{e}^{s\langle\mu,v\rangle} F_\xi(z_0 + sv)$ as

$$\mathrm{e}^{\langle\xi,z_0\rangle} \frac{\mathrm{e}^{s\langle\mu+\xi,v\rangle}}{\prod_{i=1}^{R}(1 - u_i \mathrm{e}^{\langle\alpha_i,z_0\rangle} \mathrm{e}^{s\langle\alpha_i,v\rangle})} = \mathrm{e}^{\langle\xi,z_0\rangle} \prod_{i=1}^{R} \frac{\mathrm{e}^{st_i\langle\alpha_i,v\rangle}}{(1 - u_i \mathrm{e}^{\langle\alpha_i,z_0\rangle} \mathrm{e}^{s\langle\alpha_i,v\rangle})}.$$

As each of the factors on the right-hand side remains bounded when s tends to ∞, we have shown that $\mu \in \Box(z_0, F)$.

We now prove the converse. Let μ be such that the function

$$s \mapsto \mathrm{e}^{s\langle \mu, v\rangle} F(z_0 + sv)$$

is bounded as $s \to \infty$ for any $v \in V$. Assume that, nevertheless, there exists ν in the set I such that $\mu + \nu$ is not in the convex polytope $\Pi := \sum_{i=1}^{R}[0,1]\alpha_i$. The vectors $\alpha_{\mathbf{k}} = \sum_{i\in\mathbf{k}} \alpha_i$, where $\mathbf{k}$ is a subset of $\{1, \ldots, R\}$, are all in the polytope Π. Thus there exists $w \in V$ and $a \in \mathbb{R}$ such that $\langle \sum_{i\in\mathbf{k}} \alpha_i, w\rangle < a$ for all subsets $\mathbf{k}$ of $\{1, 2, \ldots, R\}$, while $\langle \mu + \nu, w\rangle > a$. The set of such vectors w is an open set in V.

We write

$$\mathrm{e}^{s\langle \mu, v\rangle} F(z_0 + sv) = \frac{P(s, v)}{D(s, v)},$$

with

$$P(s, v) = \sum_{\xi} c_\xi \mathrm{e}^{\langle \xi, z_0\rangle} \mathrm{e}^{s\langle \mu+\xi, v\rangle} \quad \text{and} \quad D(s, v) = \prod_{i=1}^{R} \bigl(1 - u_i \mathrm{e}^{\langle \alpha_i, z_0 + sv\rangle}\bigr).$$

Then

$$D(s, v) = \prod_{i=1}^{R} \bigl(1 - u_i \mathrm{e}^{\langle \alpha_i, z_0 + sv\rangle}\bigr) = \sum_{\mathbf{k}} c_{\mathbf{k}} \mathrm{e}^{\langle \alpha_{\mathbf{k}}, z_0\rangle} \mathrm{e}^{s\langle \alpha_{\mathbf{k}}, v\rangle},$$

for some constants $c_{\mathbf{k}}$. Note that the function $s \mapsto D(s, v)$ does not vanish identically, as $D(0, v) = \prod_{i=1}^{R}(1 - u_i \mathrm{e}^{\langle \alpha_i, z_0\rangle})$. Thus for any w such that $\langle \sum_{i\in\mathbf{k}} \alpha_i, w\rangle < a$, the denominator $D(s, w)$ can be rewritten as a finite sum of exponentials $\sum_k h_k \mathrm{e}^{b_k s}$ with distinct exponents b_k and nonzero coefficients h_k. We clearly have $\max_k(b_k) < a$.

Consider now

$$P(s, w) = \sum_{\xi} c_\xi \mathrm{e}^{\langle \xi, z_0\rangle} \mathrm{e}^{s\langle \mu+\xi, w\rangle}.$$

Since the set $\{w \in V \mid \langle \mu + \nu, w\rangle > a, \langle \sum_{i\in\mathbf{k}} \alpha_i, w\rangle < a\}$ is open, we can choose an element w_0 in it such that the numbers $\langle \mu + \xi, w_0\rangle$ are *distinct* for all $\xi \in I$. Then the numerator $P(s, w_0)$ may be rewritten as a sum of exponentials $\sum_j c_j \mathrm{e}^{a_j s}$ with nonzero constants c_j, and distinct exponents a_j such that $\max_j(a_j) > a$. Thus the function $F(s, w_0)$ is equal to the quotient $\sum_j c_j \mathrm{e}^{a_j s} / \sum_k h_k \mathrm{e}^{b_k s}$, which is equivalent to $c\mathrm{e}^{s(\max_j a_j - \max_k b_k)}$ as $s \to +\infty$ ($c \neq 0$). The exponent is positive, hence the function $s \mapsto F(s, w_0)$ tends to ∞ when s tends to $+\infty$. This contradicts our assumption on μ, and the proof of Proposition 1.5 is complete. $\Box$

Let $F \in M^{\Gamma}$. As a consequence of Proposition 1.5, the set $\Box(z_0, F)$ is independent of the choice of z_0.

Definition 1.7. Let $F \in M^\Gamma$ and z_0 be an arbitrary element of $V_{\mathbb{C}}$ which is not a pole of F. We denote by $\square(F)$ the set $\square(z_0, F)$.

The set $\square(F)$ is easy to determine, using any presentation of F as a fraction.

Example 3. Let

$$F(z) = \frac{1}{1-\mathrm{e}^z} = \frac{1+\mathrm{e}^z}{1-\mathrm{e}^{2z}}.$$

Using the first expression, we obtain $\square(F) = [0,1]$. Using the second expression, we obtain $\square(F) = [0,2] \cap [-1,1]$.

Lemma 1.6. *Let $F \in M^\Gamma$ and $\mu \in V^*$. Assume that μ is in the interior of $\square(F)$ and that z_0 is not a pole of F. Then for all nonzero $v \in V$, the function $s \mapsto \mathrm{e}^{s\langle\mu,v\rangle} F(z_0 + sv)$ tends to zero when s is real and tends to $+\infty$.*

Proof. Consider $F \in M^\Gamma$ written as in Proposition 1.5 and let us return to the first part of the proof of this proposition. If the interior of $\square(F)$ is nonempty, then the linear forms α_i necessarily generate V^*. Furthermore, if μ is in the interior of $\square(F)$, then, for each $\xi \in I$, we can write $\mu + \xi = \sum_{i=1}^R t_i\alpha_i$ with $0 < t_i < 1$. Each factor $\mathrm{e}^{st_i\langle\alpha_i,v\rangle}/(1 - u_i\mathrm{e}^{\langle\alpha_i,z_0\rangle}\mathrm{e}^{s\langle\alpha_i,v\rangle})$ remains bounded when s tends to ∞. Since v is not equal to 0, there exists at least one linear form α_j with $\langle\alpha_j, v\rangle \neq 0$. The corresponding factor tends to 0 when s tends to ∞, and we obtain the lemma. $\square$

Definition 1.8.

- For $\mu \in V^*$, we denote by $M^\Gamma(\mu)$ the set of $F \in M^\Gamma$ such that $\mu \in \square(F)$. Similarly, for $\mu \in V^*$ and a Γ-rational arrangement $\mathcal{A}$, let

$$M^{\Gamma\mathcal{A}}(\mu) = \left\{F \in M^{\Gamma\mathcal{A}} \;\middle|\; \mu \in \square(F)\right\}.$$

- Let $F \in M^\Gamma$ and $\mu \in \square(F)$. A decomposition $F = \sum F_i$ of F into a sum of terms from M^Γ will be called *μ-admissible* if $\mu \in \square(F_i)$ for every i.

We have the following obvious inclusions:

Lemma 1.7. *Let $F, G \in M^\Gamma$. Then*

$$\square(F) \cap \square(G) \subset \square(F+G) \quad \textit{and} \quad \square(F) + \square(G) \subset \square(FG).$$

Remark 1.1. A consequence of Proposition 1.5 is that if $F = \sum_{i\in I} P_i/D$ is a sum of fractions from M^Γ with the same denominator, then $F \in M^\Gamma(\mu)$ if and only if $P_i/D \in M^\Gamma(\mu)$ for each $i \in I$. However, for a decomposition $F = \sum_i P_i/D_i$ with different denominators, the inclusion $\bigcap_i \square(P_i/D_i) \subset \square(F)$ is strict in general.

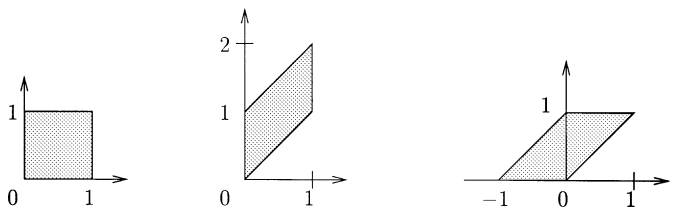

Fig. 1. The sets $\square(F_1)$, $\square(F_2)$, and $\square(F_3)$.

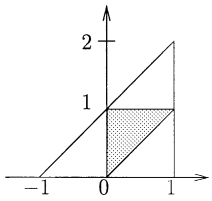

Fig. 2. The sets $\square(F_1)$, $\square(F_2)$, $\square(F_3)$, and $\square(F_2) \cap \square(F_3)$.

Example 4. Set

$$F_1 = \frac{1}{(1-\mathrm{e}^{z_1})(1-\mathrm{e}^{z_2})}, \qquad F_2 = \frac{1}{(1-\mathrm{e}^{z_1+z_2})(1-\mathrm{e}^{z_2})},$$
$$F_3 = \frac{1}{(1-\mathrm{e}^{z_1+z_2})(1-\mathrm{e}^{-z_1})}.$$

Then we have $F_1 = F_2 - F_3$. Figure 1 shows the three parallelograms $\square(F_1)$, $\square(F_2)$ and $\square(F_3)$. Clearly, $\square(F_2) \cap \square(F_3)$ is strictly smaller than $\square(F_1)$ (cf. Fig. 2).

The following lemma will allow us to obtain admissible decompositions of certain specific elements of $M^{\Gamma}(\mu)$.

Lemma 1.8. *Let $\alpha_1, \ldots, \alpha_r$ be nonzero linear forms, and let $\alpha_0 = -(\alpha_1 + \alpha_2 + \cdots + \alpha_r)$. Let $u_1, \ldots, u_r$ be nonzero complex numbers, and let*

$$F = \frac{1}{\prod_{i=1}^{r}(1-u_i\mathrm{e}^{\alpha_i})}.$$

Set $\mu = \sum_{i=1}^{r} t_i\alpha_i \in \square(F)$ with $0 \leqslant t_1 \leqslant t_2 \leqslant \cdots \leqslant t_r \leqslant 1$.

Assume that either the linear form α_0 is not identically zero, or if $\alpha_0 = 0$ then the product $u_1 \cdots u_r \neq 1$. This ensures that the function $(1 - u_1 \cdots u_r \mathrm{e}^{-\langle\alpha_0, z\rangle})^{-1}$ is well defined as a meromorphic function on $V_{\mathbb{C}}$. Then we have

$$F = \sum_{i=1}^{r} F_i$$

where

$$F_i = (-1)^{i+1} \frac{1}{(1-u_1u_2\cdots u_r \mathrm{e}^{-\alpha_0})} \prod_{j=1}^{i-1} \frac{1}{(1-u_j^{-1}\mathrm{e}^{-\alpha_j})} \prod_{j=i+1}^{r} \frac{1}{(1-u_j\mathrm{e}^{\alpha_j})},$$

and $\mu \in \square(F_i)$ *for each* $1 \leqslant i \leqslant r$.

Proof. The equality $F = \sum_{i=1}^{r} F_i$ is verified by multiplying by $(1-u_1u_2\cdots u_r\mathrm{e}^{-\alpha_0})$. The resulting formula in another form is

$$\sum_{i=1}^{r} \frac{\prod_{j=1}^{i-1} u_j \mathrm{e}^{\alpha_j}}{\prod_{j\neq i}(1-u_j\mathrm{e}^{\alpha_j})} = \frac{1-\prod_{i=1}^{r} u_i \mathrm{e}^{\alpha_i}}{\prod_{i=1}^{r}(1-u_i\mathrm{e}^{\alpha_i})}. \tag{1.3}$$

It remains to check that $\mu \in \square(F_i)$ for each i. We have

$$\mu = \sum_{j=1}^{i-1} t_j\alpha_j + t_i\alpha_i + \sum_{j=i+1}^{r} t_j\alpha_j = -t_i\alpha_0 + \sum_{j=1}^{i-1}(t_j - t_i)\alpha_j + \sum_{j=i+1}^{r}(t_j - t_i)\alpha_j$$

where the coefficients of $-\alpha_0, -\alpha_1, \ldots, -\alpha_{i-1}, \alpha_{i+1}, \ldots, \alpha_r$ are between 0 and 1. Considering the form of the functions F_i, this is exactly the criterion of being in $\square(F_i)$, and the proof is complete. $\square$

Remark 1.2. We would like to stress here that the μ-admissible decomposition of F given in Lemma 1.8 depends on the position of the element μ in $\square(F)$ in an essential manner.

Example 5. Let

$$F(z_1, z_2) = \frac{1}{(1-\mathrm{e}^{z_1})(1-\mathrm{e}^{z_2})}$$

and $\mu = (\mu_1, \mu_2)$ in $\square(F)$, i.e., $0 \leqslant \mu_1 \leqslant 1$ and $0 \leqslant \mu_2 \leqslant 1$. Then if $\mu_1 \leqslant \mu_2$, we write

$$F = F_1 - F_2$$

with

$$F_1(z_1, z_2) = \frac{1}{(1-\mathrm{e}^{z_1+z_2})(1-\mathrm{e}^{z_2})} \quad \text{and} \quad F_2(z_1, z_2) = \frac{1}{(1-\mathrm{e}^{z_1+z_2})(1-\mathrm{e}^{-z_1})},$$

so that $\mu \in \square(F_1) \cap \square(F_2)$.

If $\mu_1 \geqslant \mu_2$, then the roles of z_1 and z_2 are reversed, and

$$F = F_1' - F_2'$$

with

$$F_1'(z_1, z_2) = \frac{1}{(1 - \mathrm{e}^{z_1+z_2})(1 - \mathrm{e}^{z_1})} \quad \text{and} \quad F_2'(z_1, z_2) = \frac{1}{(1 - \mathrm{e}^{z_1+z_2})(1 - \mathrm{e}^{-z_2})}.$$

Again, we have $\mu \in \Box(F_1') \cap \Box(F_2')$.

Example 6. Let

$$F(z) = \frac{1}{(1 - u^{-1}\mathrm{e}^{-z})(1 - v\mathrm{e}^{z})}$$

with $u \neq v$. Let $\mu \in [-1, 1]$. Then if $0 \leqslant \mu \leqslant 1$, we write

$$F(z) = F_1(z) - F_2(z)$$

with

$$F_1(z) = \frac{1}{(1 - u^{-1}v)} \frac{1}{(1 - v\mathrm{e}^{z})}, \qquad F_2(z) = \frac{1}{(1 - u^{-1}v)} \frac{1}{(1 - u\mathrm{e}^{z})}$$

and $\mu \in \Box(F_1) \cap \Box(F_2)$. If $-1 \leqslant \mu \leqslant 0$, then we exchange the roles of z and $-z$ and write

$$F(z) = F_1'(z) - F_2'(z)$$

with

$$F_1'(z) = \frac{1}{(1 - u^{-1}v)} \frac{1}{(1 - u^{-1}\mathrm{e}^{-z})}, \qquad F_2'(z) = \frac{1}{(1 - u^{-1}v)} \frac{1}{(1 - v^{-1}\mathrm{e}^{-z})},$$

where again $\mu \in \Box(F_1') \cap \Box(F_2')$.

1.4. Separating variables

Let $\Gamma \subset V$ be a lattice of full rank and $\mathcal{A}$ be a Γ-rational arrangement of hyperplanes in V. Recall that given $\mu \in V^*$, we defined $M^{\Gamma\mathcal{A}}(\mu)$ to be the subspace of functions F in $M^{\Gamma\mathcal{A}}$ such that $\mu \in \Box(F)$.

Lemma 1.9 (The exchange lemma). *Let $\mathcal{A} = \{H_1, \ldots, H_m\}$ be a rational arrangement of hyperplanes and let H_0 be a rational hyperplane, which is dependent on $\mathcal{A}$. Denote by $\mathcal{A}_i$ the arrangement $\{H_0, H_1, \ldots, \widehat{H}_i, \ldots, H_m\}$, where we have replaced the hyperplane H_i by the hyperplane H_0. Then, for any $\mu \in V^*$, we have*

$$M^{\Gamma\mathcal{A}}(\mu) \subset \sum_{i=1}^{m} M^{\Gamma\mathcal{A}_i}(\mu).$$

Proof. The dependence of H_0 on $\mathcal{A}$ means that there are linear forms $\alpha_0, \dots, \alpha_m \in \Gamma^*$ with $H_0 = H_{\alpha_0}, H_1 = H_{\alpha_1}, \dots, H_m = H_{\alpha_m}$, such that α_0 may be expressed as a linear combination of the rest of the αs. By using multiples of these linear forms to describe our hyperplanes and reordering the hyperplanes in $\mathcal{A}$ if necessary, we may assume that the relation takes the form $\alpha_0 + \alpha_1 + \cdots + \alpha_r = 0$, where $r \leqslant m$.

Let $F \in M^{\Gamma\mathcal{A}}(\mu)$. By Lemma 1.4, we may write

$$F = \sum_{\xi \in I} c_\xi \frac{\mathrm{e}^\xi}{D}, \quad D = \prod_{j=1}^{R} \bigl(1 - u_j \mathrm{e}^{\beta_j}\bigr),$$

where $[\beta_1, \dots, \beta_R]$ is a sequence of not necessarily distinct elements of the set $\{\alpha_1, \dots, \alpha_m\}$ and c_ξ is a nonzero complex number for $\xi \in I$. According to Remark 1.1, each of the terms e^ξ/D is in $M^{\Gamma\mathcal{A}}(\mu)$, so we may assume that F is of the form e^ξ/D to begin with.

We argue by induction on the length R of the sequence $[\beta_1, \dots, \beta_R]$. If the set $\{\beta_j \mid 1 \leqslant j \leqslant R\}$ of elements occurring in the sequence is strictly smaller than the set $\{\alpha_1, \dots, \alpha_m\}$, then one of the linear forms α_i does not appear in the sequence $[\beta_1, \dots, \beta_R]$, and thus F is already in $\sum_{i=1}^m M^{\Gamma\mathcal{A}_i}(\mu)$. Otherwise, reordering the sequence, we may assume that $\beta_1 = \alpha_1$, $\beta_2 = \alpha_2, \dots, \beta_r = \alpha_r$. We write $D' = \prod_{i=1}^r (1 - u_i \mathrm{e}^{\alpha_i})$, $D'' = \prod_{j=r+1}^R (1 - u_j \mathrm{e}^{\beta_j})$, so that $D = D'D''$. As $\mu \in \square(F)$, we write $\mu = \mu' + \mu''$ with $\mu' \in \sum_{i=1}^r [0,1]\alpha_i$ and $\mu'' \in -\xi + \sum_{i=r+1}^R [0,1]\beta_i$. Now

$$\frac{\mathrm{e}^\xi}{D} = \frac{1}{D'} \frac{\mathrm{e}^\xi}{D''} \quad \text{with } \frac{1}{D'} \in M^\Gamma(\mu') \text{ and } \frac{\mathrm{e}^\xi}{D''} \in M^\Gamma(\mu'').$$

We may suppose that, after reordering the first r elements of the sequence if necessary, we have $\mu' = \sum_{k=1}^r t_k \alpha_k$ with $0 \leqslant t_1 \leqslant t_2 \leqslant \cdots \leqslant t_r$.

Using Lemma 1.8, we write $1/D' = \sum_{k=1}^r F'_k$, with $\mu' \in \square(F'_k)$. Thus we obtain a μ-admissible decomposition $\mathrm{e}^\xi/D = \sum_{k=1}^r F'_k \mathrm{e}^\xi/D''$. More explicitly, writing $u_0 = (u_1 \cdots u_r)^{-1}$, we obtain the μ-admissible decomposition

$$\frac{\mathrm{e}^\xi}{D} = \sum_{k=1}^r \frac{1}{(1 - u_0^{-1} \mathrm{e}^{-\alpha_0})} G_k$$

with

$$G_k = \frac{\mathrm{e}^\xi}{\prod_{j=1}^{k-1} (1 - u_j^{-1} \mathrm{e}^{-\alpha_j}) \prod_{j=k+1}^r (1 - u_j \mathrm{e}^{\alpha_j}) \prod_{j=r+1}^R (1 - u_j \mathrm{e}^{\beta_j})}.$$

For each $1 \leqslant k \leqslant r$, we have $\mu = t_k \alpha_0 + \mu'_k$ with $0 \leqslant t_k \leqslant 1$ and $\mu'_k \in \square(G_k)$. We can apply our induction hypothesis to $G_k \in M^{\Gamma\mathcal{A}}(\mu'_k)$ since the length of the denominator of G_k is $R - 1$. We then obtain an admissible decomposition of G_k as $\sum_{i=1}^m G_k^i$ with

$\mu'_k \in \square(G^i_k)$ and $G^i_k \in M^{\Gamma\mathcal{A}_i}$. According to Lemma 1.7, the function $G^i_k/(1-u_0^{-1}\mathrm{e}^{-\alpha_0})$ is in $M^{\Gamma\mathcal{A}_i}(t_k\alpha_0+\mu'_k) = M^{\Gamma\mathcal{A}_i}(\mu)$. Hence the proof is now complete. □

Clearly, if $\mathcal{B} \subset \mathcal{A}$ then $M^{\Gamma\mathcal{B}}(\mu) \subset M^{\Gamma\mathcal{A}}(\mu)$. The following crucial partial fraction decomposition type result holds in the reverse direction:

Theorem 1.10 [21]. *For each $\mu \in V^*$, we have the equality*

$$M^{\Gamma\mathcal{A}}(\mu) = \sum M^{\Gamma\mathbf{a}}(\mu),$$

where the sum is over all independent subarrangement **a** *of $\mathcal{A}$.*

Proof. We use induction on the number N of elements in $\mathcal{A}$. If $\mathcal{A}$ is linearly independent, we are done. If not, we assume that the statement is known for arrangements with $N-1$ elements, and write $\mathcal{A} = \{H_{\alpha_1}, H_{\alpha_2}, \ldots, H_{\alpha_N}\}$. As $\mathcal{A}$ is not independent, there is a hyperplane, say H_{α_N}, which is dependent on the rest of the system

$$\mathcal{A}' = \{H_{\alpha_1}, \ldots, H_{\alpha_{N-1}}\}.$$

For $1 \leqslant i \leqslant (N-1)$ we let

$$\mathcal{A}'_i = \{H_{\alpha_1}, H_{\alpha_2}, \ldots, \widehat{H}_{\alpha_i}, \ldots, H_{\alpha_N}\}.$$

Note that each $\mathcal{A}'_i$ has $N-1$ elements. A function F of $M^{\Gamma\mathcal{A}}(\mu)$ may be written in the form $F = P/D$ with $P = \sum_{\xi\in I} c_\xi \mathrm{e}^\xi$ and $D = D'D_N$, where

$$D' = \prod_{j=1}^{R}\left(1-u_j\mathrm{e}^{\beta_j}\right) \quad \text{and} \quad D_N = \prod_{j=1}^{n_N}\left(1-v_j\mathrm{e}^{\alpha_N}\right).$$

In the factorization of D', the elements β_j belong to the set $\{\alpha_1, \ldots, \alpha_{N-1}\}$.

Each of the terms $F_\xi = \mathrm{e}^\xi/D$ of F is in $M^{\Gamma\mathcal{A}}(\mu)$. We may split μ as $\mu = \mu' + \mu_N$, with $\mu_N = t_N\alpha_N$, $0 \leqslant t_N \leqslant n_N$ and

$$\frac{\mathrm{e}^\xi}{D'} \in M^{\Gamma\mathcal{A}'}(\mu').$$

Applying the exchange lemma to H_{α_N} and the system $\mathcal{A}'$, we obtain an admissible decomposition of e^ξ/D' as a sum of elements $F'_i \in M^{\Gamma\mathcal{A}'_i}(\mu')$. Then F_ξ is a sum of terms of the form F'_i/D_N, each of which is in $M^{\Gamma\mathcal{A}'_i}(\mu)$. Since the system $\mathcal{A}'_i$ is composed of $N-1$ hyperplanes, we may conclude the proof of the theorem by our induction hypothesis. □

Remark 1.3. A fixed total order $\prec$ on the arrangement $\mathcal{A}$ of hyperplanes in an n-dimensional vector space selects a subset $NBC(\mathcal{A}, \prec)$ of the set of n-tuples of independent hyperplanes in $\mathcal{A}$. This subset is called the *no-broken-circuit basis* of $\mathcal{A}$ (cf. [21] for details). The arguments used in the proof of the above theorem may be used to show that, in fact,

$$M^{\Gamma\mathcal{A}}(\mu) = \sum_{\mathbf{a}\in NBC(\mathcal{A},\prec)} M^{\Gamma\mathbf{a}}(\mu).$$

Moreover, the sets $NBC(\mathcal{A}, \prec)$ are minimal with respect to this property.

Now we analyze the set $M^{\Gamma\mathbf{a}}(\mu)$ when the arrangement $\mathbf{a}$ is independent. Thus let $\mathbf{a}$ be a set of m independent hyperplanes. We choose $\alpha_k \in \Gamma^*$, $k = 1, \dots, m$, such that $\mathbf{a} = \{H_{\alpha_1}, \dots, H_{\alpha_m}\}$. Then $\phi = [\alpha_1, \dots, \alpha_m]$ is a sequence of linearly independent linear forms. Let $\mathbf{h} = [h_1, h_2, \dots, h_m]$ be a sequence of nonnegative integers and $\mathbf{u} = [u_1, u_2, \dots, u_m]$ be a sequence of nonzero complex numbers. We introduce the function

$$g(\xi, \phi, \mathbf{h}, \mathbf{u}) = \frac{\mathrm{e}^{\xi}}{\prod_{i=1}^{m}(1 - u_i \mathrm{e}^{\alpha_i})^{h_i}},$$

where $\xi \in \Gamma^*$.

Proposition 1.11. *For an independent arrangement* $\mathbf{a} = \mathcal{A}(\phi)$, *each function* $F \in M^{\Gamma\mathbf{a}}(\mu)$ *may be represented as a* μ*-admissible linear combination of the functions* $g(\xi, \phi, \mathbf{h}, \mathbf{u})$.

Proof. Clearly, it is sufficient to prove this statement for the case $|\phi| = 1$. The general case will follow by taking the product of the linear combinations for each participating linear form.

Set $\phi = \{\alpha\}$ and $\mathbf{a} = \mathcal{A}(\phi)$. An element $F \in M^{\Gamma\mathbf{a}}(\mu)$ is a linear combination of elements $F_\xi = \mathrm{e}^{\xi}/D \in M^{\Gamma\mathbf{a}}(\mu)$, where $D = \prod_{i=1}^{R}(1 - u_i \mathrm{e}^{\alpha})$. We need to show that each function F_ξ may be represented as a linear combination of elements of $M^{\Gamma\mathbf{a}}(\mu)$ of the form $\mathrm{e}^{\zeta}/(1 - v\mathrm{e}^{\alpha})^h$.

We use induction on R. If all the u_i are equal, then F_ξ already has the required form. If not, up to reordering, we can assume that $u_1 \neq u_2$. We write $D = D_{12}D'$ with $D_{12} = (1 - u_1\mathrm{e}^{\alpha})(1 - u_2\mathrm{e}^{\alpha})$. Factor F_ξ as $F_\xi = G/D_{12}$ with $G = \mathrm{e}^{\xi}/\prod_{i=3}^{R}(1 - u_i\mathrm{e}^{\alpha})$, and let $\mu = \mu' + \mu''$, where $\mu' = t\alpha$ with $0 \leqslant t \leqslant 2$ and $\mu'' \in \Box(G)$.

There are two cases: if $0 \leqslant t \leqslant 1$, we write

$$\frac{1}{(1 - u_1\mathrm{e}^{\alpha})(1 - u_2\mathrm{e}^{\alpha})} = \frac{1}{(1 - u_2u_1^{-1})}\frac{1}{(1 - u_1\mathrm{e}^{\alpha})} + \frac{1}{(1 - u_1u_2^{-1})}\frac{1}{(1 - u_2\mathrm{e}^{\alpha})};$$

if $1 \leqslant t \leqslant 2$, we write

$$\frac{1}{(1 - u_1\mathrm{e}^{\alpha})(1 - u_2\mathrm{e}^{\alpha})} = \frac{-1}{(1 - u_2u_1^{-1})}\frac{u_1^{-1}\mathrm{e}^{-\alpha}}{(1 - u_2\mathrm{e}^{\alpha})} + \frac{-1}{(1 - u_1u_2^{-1})}\frac{u_2^{-1}\mathrm{e}^{-\alpha}}{(1 - u_1\mathrm{e}^{\alpha})}.$$

In both cases, we obtain a μ-admissible decomposition of e^{ξ}/D into a sum G_1+G_2, where

$$G_1 = c_1 \frac{e^{\xi'}}{\prod_{i\neq 1}(1-u_i e^{\alpha})} \quad \text{and} \quad G_2 = c_2 \frac{e^{\xi'}}{\prod_{i\neq 2}(1-u_i e^{\alpha})}.$$

This allows us to reduce the number of factors in F_ξ by one. Our statement now follows by the inductive hypothesis. $\square$

1.5. Essential arrangements and nonspecial elements

Now we formulate a version of Theorem 1.10 in a form which incorporates Proposition 1.11 and excludes some degenerate cases.

Let again Γ be a lattice of full rank in the n-dimensional vector space V, and let $\mathcal{A} = \{H_1, \dots, H_N\}$ be an essential Γ-rational arrangement of hyperplanes in V. Fix a set Δ of representative linear forms for $\mathcal{A}$; thus we have $\mathcal{A} = \mathcal{A}(\Delta)$. Define $\mu \in V^*$ to be Γ-*special* with respect to $\mathcal{A}$ if $\mu = \lambda + \sum_{i=1}^{N} t_i\alpha_i$, where $\lambda \in \Gamma^*$, $t_i \in \mathbb{R}$, $\alpha_i \in \Delta$ and at most $n-1$ of the coefficients t_i are nonzero. This property depends both on Γ and on $\mathcal{A}$. The set of nonspecial elements is a Γ^*-invariant union of open polyhedral chambers in V^*.

Note that if $F \in M^{\Gamma\mathcal{A}}$, then the boundary of $\square(F)$ is contained in the set of special elements. Thus if μ is nonspecial and $F \in M^{\Gamma\mathcal{A}}(\mu)$, then μ is in the interior of $\square(F)$. We arrive at the following proposition.

Proposition 1.12. *Let $\mathcal{A}$ be an essential arrangement of rational hyperplanes. Let $F \in M^{\Gamma\mathcal{A}}$. Let $\mu \in \square(F)$ be a nonspecial element. Then there exists a set $\mathcal{B}$ consisting of independent n-tuples of hyperplanes and a μ-admissible decomposition $F = \sum_{\mathbf{a}\in\mathcal{B}} F_{\mathbf{a}}$, with $F_{\mathbf{a}} \in M^{\Gamma\mathbf{a}}(\mu)$. Furthermore, choosing a basis $\sigma = \{\alpha_1, \dots, \alpha_n\}$ such that $\mathbf{a} = \mathcal{A}(\sigma)$, the function $F_{\mathbf{a}}$ is a linear combination of functions $g(\xi, \sigma, \mathbf{h}, \mathbf{u})$ with $\mu + \xi = \sum_{i=1}^{n} t_i\alpha_i$ and $0 < t_i < h_i$.*

This proposition allows us to write F as a linear combination of those functions $g(\xi, \sigma, \mathbf{h}, \mathbf{u})$, for which μ belongs to the interior of $\square(g(\xi, \sigma, \mathbf{h}, \mathbf{u}))$.

2. Expansion and inversion formula

2.1. Expansion of functions

Let V be a real vector space of dimension n endowed with a lattice Γ. A choice of a nonzero vector v in V induces a choice of an open half space $V_+^* \subset V^*$ of linear forms which take positive values on v. We fix such a half space and consider a finite subset Δ of elements of $V_+^* \cap \Gamma^*$. We assume that Δ linearly spans the vector space V^* and thus generates a closed acute n-dimensional cone $C(\Delta)$:

$$C(\Delta) = \sum_{\alpha\in\Delta} \mathbb{R}_{\geqslant 0}\,\alpha.$$

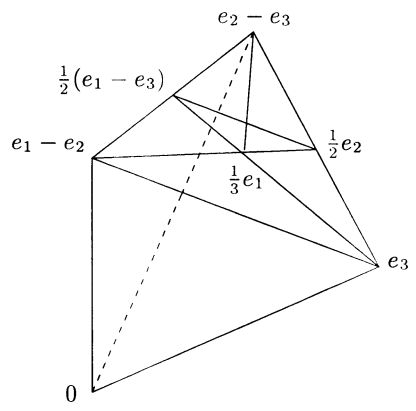

Fig. 3. The chambers of the system A_3^+.

Recall that we denoted by $\mathcal{B}(\Delta)$ the set of those subsets of Δ which are bases of V^*. Following [1], we will call a vector in V^* *singular* with respect to Δ if it is in a cone $C(\nu)$ generated by a subset $\nu \subset \Delta$ of cardinality strictly less than n. The set of singular vectors will be denoted by C^{Δ}_{sing} and the vectors in the complement $C^{\Delta}_{\text{reg}} = V^* \setminus C^{\Delta}_{\text{sing}}$ will be called *regular*. The connected components of C^{Δ}_{reg} are conic chambers called *big chambers*. This term is chosen to differentiate them from the smaller chambers cut out by special elements defined in Section 1.5. We might call big chambers simply *chambers*, whenever this does not cause confusion.

A big chamber is an open cone. Note that there might be regular elements which are *special* in the sense of Section 1.5: if such μ is written $\mu = \sum_{i=1}^{N} t_i\alpha_i$, $t_i \in \mathbb{R}$, $\alpha_i \in \Delta$ and at most $n-1$ of the coefficients t_i are nonzero, then at least one of the coefficients t_i is strictly negative.

If $\mathfrak{c}$ is a big chamber and $\sigma \in \mathcal{B}(\Delta)$, then either $\mathfrak{c} \subset C(\sigma)$ or $\mathfrak{c} \cap C(\sigma) = \emptyset$. One of the big chambers is the complement of the closed cone $C(\Delta)$; we denote it by $\mathfrak{c}^{\text{null}}$. Note that this convention is slightly different from the convention adopted in [2], where $\mathfrak{c}^{\text{null}}$ was not considered a chamber.

If $\mathfrak{c}$ is a big chamber contained in $C(\Delta)$, then the closure of $\mathfrak{c}$ may be represented as

$$\bar{\mathfrak{c}} = \bigcap C(\sigma), \quad \mathfrak{c} \subset C(\sigma),\ \sigma \in \mathcal{B}(\Delta).$$

In particular $\bar{\mathfrak{c}}$ is a closed convex polyhedral cone.

Denote by $\mathbb{C}[\![\Gamma^*]\!]$ the set of complex, formal, possibly infinite linear combinations of the exponentials e^{λ}, where $\lambda \in \Gamma^*$. If $\Theta = \sum_{\lambda\in\Gamma^*} m_\lambda \mathrm{e}^{\lambda}$ is an element of $\mathbb{C}[\![\Gamma^*]\!]$, then the *support* of Θ is the set of $\lambda \in \Gamma^*$ such that $m_\lambda \neq 0$. The coefficient m_λ of e^{λ} in Θ will be denoted by $\mathrm{Coeff}(\Theta, \lambda)$.

Let $\mathbb{C}_{\Delta}[\![\Gamma^*]\!]$ be the subspace of $\mathbb{C}[\![\Gamma^*]\!]$ spanned by the elements Θ with supports contained in sets of the form $I + C(\Delta)$, where I is a finite subset of Γ^*. This subspace forms a ring which contains the ring $\mathbb{C}[\Gamma^*]$ of finite linear combinations of elements e^{ξ}, $\xi \in \Gamma^*$.

Consider the arrangement of hyperplanes $\mathcal{A} = \mathcal{A}(\Delta)$ and recall the definition of the algebra $M^{\Gamma\mathcal{A}}$ from Section 1. Every function $F \in M^{\Gamma\mathcal{A}}$ can be written in the form

$$F = \frac{\sum_{\xi \in I} c_\xi \mathrm{e}^\xi}{\prod_{k=1}^{R}(1 - u_k \mathrm{e}^{\beta_k})},$$

where I is a finite subset of Γ^*, $u_k, c_\xi \in \mathbb{C}^*$, and the exponents β_k are in Δ.

For $\alpha \in \Delta$ and $u \in \mathbb{C}^*$, define the expansion

$$r^+\left(\frac{1}{1 - u\mathrm{e}^\alpha}\right) = \sum_{k=0}^{\infty} u^k \mathrm{e}^{k\alpha},$$

where the right-hand side is interpreted as a formal series. This expansion map extends to an injective ring homomorphism

$$r^+ : M^{\Gamma\mathcal{A}} \to \mathbb{C}_\Delta[\![\Gamma^*]\!]$$

given by

$$r^+(F) = \left(\sum_{\xi \in I} c_\xi \mathrm{e}^\xi\right) \prod_{k=1}^{R} r^+\left(\frac{1}{1 - u_k \mathrm{e}^{\beta_k}}\right).$$

We call $r^+(F)$ the expansion of F.

The aim of this section is to give a residue formula for the coefficient $\mathrm{Coeff}(r^+(F), \lambda)$ for $F \in M^{\Gamma\mathcal{A}}$ and $\lambda \in \Gamma^*$.

2.2. *The residue transform*

We start with a general definition of exponential-polynomial functions.

Definition 2.1.

- For a $\mathbb{Z}$-module W and a field $\mathbb{F}$, define the space of polynomial functions $P(W, \mathbb{F})$ to be the subring of $\mathbb{F}$-valued functions on W generated by the additive $\mathbb{F}$-valued characters of W.
- For a $\mathbb{Z}$-module W and a field $\mathbb{F}$, define the space of exponential-polynomial functions $\mathrm{EP}(W, \mathbb{F})$ to be the subring of $\mathbb{F}$-valued functions on W generated by the additive $\mathbb{F}$-valued and multiplicative $\mathbb{F}^*$-valued characters of W.

Clearly, an exponential-polynomial function is a linear combination of multiplicative characters (exponentials) with polynomial coefficients. Usually, we will set $\mathbb{F} = \mathbb{C}$, and in this case we will write $\mathrm{EP}(W)$ for $\mathrm{EP}(W, \mathbb{F})$. In our applications, W will be either a vector space or a lattice.

When W is a lattice of full rank in a vector space E, a polynomial function f on W extends in an unique way to a polynomial function on E. Exponential-polynomial functions also extend to exponential-polynomial functions on E, but the extension is not unique. For example, if $W = \mathbb{Z} \subset \mathbb{R} = E$, then the function $n \mapsto (-1)^n n$ is an exponential-polynomial function on $\mathbb{Z}$, which can be extended on $\mathbb{R}$ as the exponential-polynomial function $x \mapsto \mathrm{e}^{\mathrm{i}(2k+1)\pi x} x$ for any integer k.

When W is a lattice and a function $f \in \mathrm{EP}(W)$ is such that the multiplicative characters which appear in it take values in roots of unity, then such a function is called *periodic-polynomial* or sometimes, *quasipolynomial*.

We continue with the setup of a lattice $\Gamma \subset V$, an arrangement $\mathcal{A}$ and a set of linear forms $\Delta \subset \Gamma^*$ representing $\mathcal{A}$. In this section we associate to any $F \in M^{\Gamma\mathcal{A}}$ an exponential-polynomial function on Γ^* with values in the space of simple fractions $S_{\mathcal{A}}$.

According to Lemma 1.3, the total residue of a function $F \in M^{\Gamma\mathcal{A}}$, written in the form

$$F = \frac{\sum_{\xi \in I} c_\xi \mathrm{e}^{\xi}}{\prod_{k=1}^{R}(1 - u_k \mathrm{e}^{\beta_k})}, \tag{2.1}$$

vanishes unless the set of linear forms $\{\beta_k \mid u_k = 1\}$ spans the vector space V^*. Let us define the total residue of F at some point $p \in V_{\mathbb{C}}$ as the total residue of the function $z \mapsto F(z-p)$. Then we observe that the total residue of F given in the above form vanishes at $p \in V_{\mathbb{C}}$ unless

$$\text{the set of forms } \left\{\beta_k \;\middle|\; \mathrm{e}^{\langle \beta_k, p\rangle} u_k = 1\right\} \text{ linearly spans } V^*.$$

The linear forms β_k are all in Γ^*, hence the set $\mathrm{SP}(F, \Gamma)$ of those points $p \in V_{\mathbb{C}}$ which satisfy this condition is invariant under translations by elements of the lattice $2\pi\mathrm{i}\Gamma$. Consider two points in $V_{\mathbb{C}}$ equivalent if they are related by such a translation, and choose a set $\mathrm{RSP}(F, \Gamma)$ containing exactly one point from each equivalence class of points in $\mathrm{SP}(F, \Gamma)$. It is clear from the definitions that the set $\mathrm{RSP}(F, \Gamma)$ is finite; we will call it a *reduced set of poles* of F.

This definition of the set $\mathrm{RSP}(F, \Gamma)$ is somewhat informal: it depends on the presentation of F. The only properties that we will need from it are that

- the set $\mathrm{RSP}(F, \Gamma)$ is finite;
- if $p, q \in \mathrm{RSP}(F, \Gamma)$ and $p - q \in 2\pi\mathrm{i}\Gamma$, then $p = q$;
- if the total residue of $F(z)G(z)$, where $G(z)$ is an entire function, does not vanish at some $q \in V_{\mathbb{C}}$, then $q \in 2\pi\mathrm{i}\Gamma + \mathrm{RSP}(F, \Gamma)$.

Now we define a function $s[F, \Gamma] : \Gamma^* \to S_{\mathcal{A}}$ with values in the space of simple fractions associated to Δ, whose value at $\lambda \in \Gamma^*$ is the sum of all the total residues of the function $z \mapsto \mathrm{e}^{\langle \lambda, z\rangle} F(-z)$ taken at inequivalent points in $V_{\mathbb{C}}$. More precisely,

Definition 2.2. For $F \in M^{\Gamma\mathcal{A}}$ and $\lambda \in \Gamma^*$, we introduce

$$s[F, \Gamma](\lambda) = \sum_{p \in \mathrm{RSP}(F, \Gamma)} \mathrm{Tres}\big(\mathrm{e}^{\langle \lambda, z-p\rangle} F(p-z)\big), \tag{2.2}$$

where the set $\mathrm{RSP}(F, \Gamma)$ is a reduced set of poles of F.

Clearly, the definition does not depend on the choice of representatives $\mathrm{RSP}(F, \Gamma)$.

Lemma 2.1. *The function $\lambda \mapsto s[F, \Gamma](\lambda)$ is an exponential-polynomial function on Γ^* with values in the space of simple fractions $S_{\mathcal{A}}$.*

Proof. Let $F \in M^{\Gamma\mathcal{A}}$ be given in the form (2.1), and pick an element $p \in \mathrm{RSP}(F, \Gamma)$. For $\lambda \in V^*$ consider the total residue

$$\mathrm{Tres}\big(\mathrm{e}^{\langle\lambda,z\rangle} F(p-z)\big).$$

The function $\mathrm{e}^{\langle\lambda,z\rangle} F(p-z)$ is in the space $\widehat{R}_{\mathrm{hp}}$ introduced at the end of Section 1.1. As the total residue depends only on the component of degree $-n$ of this function, for the purpose of the calculation of its total residue, we can replace the exponential $\mathrm{e}^{\langle\lambda,z\rangle}$ by its expansion truncated up to order $R-n$. Thus we have

$$\mathrm{Tres}\big(\mathrm{e}^{\langle\lambda,z\rangle} F(p-z)\big) = \mathrm{Tres}\left(\sum_{j=1}^{R-n} \frac{\langle\lambda, z\rangle^j}{j!} F(p-z)\right).$$

The right-hand side here clearly depends polynomially on λ, thus each term

$$\mathrm{Tres}\big(\mathrm{e}^{\langle\lambda,z-p\rangle} F(p-z)\big) = \mathrm{e}^{-\langle\lambda,p\rangle}\,\mathrm{Tres}\big(\mathrm{e}^{\langle\lambda,z\rangle} F(p-z)\big),$$

appearing in the definition of $s[F, \Gamma]$ is an exponential-polynomial function of λ. As the set $\mathrm{RSP}(F, \Gamma)$ is finite, this completes the proof. $\square$

Let us look at a few special cases.

Case 1. Let F be of the form

$$F = \frac{\sum_{\xi\in I} c_\xi \mathrm{e}^{\xi}}{\prod_{k=1}^{R}(1-\mathrm{e}^{\beta_k})},$$

i.e., let all constants u_k be equal to 1. For a basis $\sigma = \{\alpha_1, \ldots, \alpha_n\}$ of V^*, formed by elements of the sequence $[\beta_1, \ldots, \beta_R]$, the lattice $\mathbb{Z}\sigma$ is contained in Γ^* and is usually different from Γ^*. Consider $(\mathbb{Z}\sigma)^* \subset V$, the dual lattice to $\mathbb{Z}\sigma$:

$$(\mathbb{Z}\sigma)^* = \big\{s \in V \;\big|\; \langle s, \alpha_k\rangle \in \mathbb{Z} \text{ for } 1 \leqslant k \leqslant n\big\}.$$

If $p \in 2\pi\mathrm{i}(\mathbb{Z}\sigma)^*$, then the set of linear forms $\{\beta_k \mid \mathrm{e}^{\langle\beta_k,p\rangle} = 1\}$ linearly spans V^*, since it contains σ. Then the set $\mathrm{RSP}(F, \Gamma)$ is a union of representatives of the finite groups $2\pi\mathrm{i}(\mathbb{Z}\sigma)^*/2\pi\mathrm{i}\Gamma$ in $V_{\mathbb{C}}$, as σ varies over bases of V^* formed by the β_ks. As a result, for $\lambda \in \Gamma^*$ and $p \in \mathrm{RSP}(F, \Gamma)$, the exponential $\mathrm{e}^{\langle\lambda,p\rangle}$ is a root of unity. This implies that the function $s[F, \Gamma]$ on the lattice Γ^* is *periodic-polynomial*. More precisely, if n_F is an integer such that $n_F\Gamma \subset \mathbb{Z}\sigma$ for all bases σ of V^* formed by β_ks, then the function $s[F, \Gamma]$ is *polynomial* on all cosets of the form $\lambda + n_F\Gamma^*$.

Case 2. There is an interesting special case of this setup, when $s[F,\Gamma]$ is plainly polynomial: the unimodular case.

We will call a subset $\Delta \subset \Gamma^*$ *unimodular*, if every basis $\sigma \in \mathcal{B}(\Delta)$ is a $\mathbb{Z}$-basis of Γ^*, i.e., the parallelepiped $\sum_{\alpha\in\sigma}[0,1]\alpha$ contains no elements of the lattice Γ^* in its interior.

In this case, the integer n_F mentioned above may be taken to be equal to 1. We collect what we have found in the following

Lemma 2.2. *Let*

$$F = \frac{\sum_{\xi\in I} c_\xi \mathrm{e}^{\xi}}{\prod_{k=1}^{R}(1-\mathrm{e}^{\beta_k})}.$$

Then the function $\lambda \mapsto s[F,\Gamma](\lambda)$ is a periodic-polynomial function on Γ^*. If, furthermore, the elements of the sequence $[\beta_1,\beta_2,\dots,\beta_R]$ belong to a unimodular subset of Γ^*, then the function $\lambda \mapsto s[F,\Gamma](\lambda)$ is a polynomial.

Case 3. Assume, at the other extreme, that the constants u_k are generic.

For $p \in \mathrm{RSP}(F,\Gamma)$, denote by $\mathbf{j}(p)$ the subset of the set of indices $\{1,2,\dots,R\}$ given by

$$\mathbf{j}(p) = \bigl\{ j \in \{1,2,\dots,R\} \bigm| u_j \mathrm{e}^{\langle\beta_j,p\rangle} = 1 \bigr\}.$$

If the constants u_k are generic, then the set $\{\beta_j\}$, $j \in \mathbf{j}(p)$, if nonempty, consists of exactly n linearly independent elements of Δ.

We have

$$\begin{aligned}\mathrm{e}^{\langle\lambda,z-p\rangle}F(p-z) \;=\; & \mathrm{e}^{\langle\lambda,z-p\rangle}\biggl(\sum_{\xi\in I} c_\xi \mathrm{e}^{\langle\xi,p-z\rangle}\biggr)\frac{1}{\prod_{j\in\mathbf{j}(p)}\langle\beta_j,z\rangle}\prod_{j\in\mathbf{j}(p)}\frac{\langle\beta_j,z\rangle}{1-\mathrm{e}^{-\langle\beta_j,z\rangle}}\\ & \times\prod_{k\notin\mathbf{j}(p)}\frac{1}{1-u_k\mathrm{e}^{\langle\beta_k,p-z\rangle}}.\end{aligned}$$

By Lemma 1.3, the total residue of this function is the simple fraction $\prod_{j\in\mathbf{j}(p)}\beta_j^{-1}$, multiplied by the constant, which is obtained by setting z to zero in the rest of the expression. As a result we obtain the following explicit formula:

$$s[F,\Gamma](\lambda) = \sum_{p\in\mathrm{RSP}(F,\Gamma)} \mathrm{e}^{-\langle\lambda,p\rangle}\biggl(\sum_{\xi\in I} c_\xi \mathrm{e}^{\langle\xi,p\rangle}\biggr)\prod_{k\notin\mathbf{j}(p)}\frac{1}{1-u_k\mathrm{e}^{\langle\beta_k,p\rangle}}\frac{1}{\prod_{j\in\mathbf{j}(p)}\beta_j},$$

which expresses the function $\lambda \mapsto s[F,\Gamma](\lambda)$ as a linear combination of exponentials.

2.3. The residue formula

We start with recalling the notion of residue introduced by Jeffrey and Kirwan [14]. Let again Δ be a set of vectors in an open halfspace of an n-dimensional real vector space V^* and let $\mathcal{A} = \mathcal{A}(\Delta)$. We assume that Δ generate V^*. Fix a volume form vol on V^*. Given a big chamber $\mathfrak{c}$ of $C^{\Delta}_{\mathrm{reg}}$, one can construct a functional $f \mapsto J\langle \mathfrak{c}, f\rangle_{\mathrm{vol}}$ on the space $S_{\mathcal{A}}$ of simple fractions as follows. For a simple fraction

$$f_\sigma = \frac{1}{\prod_{\alpha\in\sigma}\alpha}, \quad \sigma \in \mathcal{B}(\Delta),$$

set

$$J\langle \mathfrak{c}, f_\sigma\rangle_{\mathrm{vol}} = \begin{cases} \mathrm{vol}(\sigma)^{-1}, & \text{if } \mathfrak{c} \subset C(\sigma), \\ 0, & \text{if } \mathfrak{c} \cap C(\sigma) = \emptyset. \end{cases}$$

Here we denoted by $\mathrm{vol}(\sigma)$ the volume of the parallelepiped $\sum_{\alpha\in\sigma}[0,1]\alpha$ with respect to our chosen volume form.

Now we formulate our main result. Let Γ be a rank-n lattice in V, and let $\Gamma^* \subset V^*$ be its dual lattice. As before, we assume that $\Delta \subset \Gamma^*$. Denote by vol_{Γ^*} the measure on V^* assigning volume 1 to a minimal parallelepiped spanned by elements of Γ^*.

Theorem 2.3. *Let $F \in M^{\Gamma\mathcal{A}}$ and let $\square(F)^0$ be the interior of $\square(F)$. Then for $\lambda \in \Gamma^*$ and any big chamber $\mathfrak{c}$ such that $(\lambda + \square(F)^0) \cap \mathfrak{c} \neq \emptyset$, one has*

$$\mathrm{Coeff}\big(r^+(F), \lambda\big) = J\big\langle \mathfrak{c}, s[F,\Gamma](\lambda)\big\rangle_{\mathrm{vol}_{\Gamma^*}}. \tag{2.3}$$

Before starting the proof, we analyze the one-dimensional case. Let $V = \mathbb{R}e$ and $V^* = \mathbb{R}e^*$ with lattices $\Gamma = \mathbb{Z}e$ and $\Gamma^* = \mathbb{Z}e^*$; let $\Delta = \{e^*\}$. There are two chambers in this case: $\mathfrak{c}^+ = \mathbb{R}_{>0}e^*$ and $\mathfrak{c}^- = \mathbb{R}_{<0}e^*$. We simply write $F(z)$ for a function $F(ze)$ on $V_{\mathbb{C}}$. Then $J\langle \mathfrak{c}^+, \mathrm{Tres}\, F\rangle_{\mathrm{vol}_{\Gamma^*}} = \mathrm{Res}_{z=0} F(z)\,dz$, while $J\langle \mathfrak{c}^-, \mathrm{Tres}\, F\rangle_{\mathrm{vol}_{\Gamma^*}} = 0$.

Introduce the notation

$$c(k,R) = \binom{k+(R-1)}{R-1} = \frac{1}{(R-1)!}(k+1)(k+2)\cdots\big(k+(R-1)\big).$$

We have the following simple generating function for $c(k,R)$:

Lemma 2.4.

$$\operatorname*{Res}_{z=0} \frac{\mathrm{e}^{kz}}{(1-\mathrm{e}^{-z})^R}\,\mathrm{d}z = c(k,R).$$

Proof. Using the change of variables $y = \mathrm{e}^z$ in the calculation of the residue, we obtain

$$\operatorname*{Res}_{z=0} \frac{\mathrm{e}^{kz}}{(1-\mathrm{e}^{-z})^R}\,\mathrm{d}z = \operatorname*{Res}_{y=1} \frac{y^k}{(1-y^{-1})^R}\frac{\mathrm{d}y}{y} = \operatorname*{Res}_{y=1} \frac{y^{R+k-1}}{(y-1)^R}\,\mathrm{d}y$$
$$= \operatorname*{Res}_{x=0} \frac{(1+x)^{R+k-1}}{x^R}\,\mathrm{d}x = c(k,R). \qquad \square$$

Now consider the function

$$F(z) = \frac{\mathrm{e}^{\xi z}}{(1-u\mathrm{e}^{z})^R},$$

where ξ is an integer. The following explicit formula holds for the expansion of F:

$$r^+(F) = \mathrm{e}^{\xi z}\sum_{k=0}^{\infty} c(k,R)u^k\mathrm{e}^{kz}.$$

Hence we have

$$\mathrm{Coeff}(F,\lambda) = \begin{cases} 0, & \text{if } \lambda-\xi \in \mathbb{Z}_{<0}, \\ u^{\lambda-\xi}c(\lambda-\xi,R), & \text{if } \lambda-\xi \in \mathbb{Z}_{\geqslant 0}. \end{cases} \tag{2.4}$$

Note that the relation

$$\mathrm{Coeff}(F,\lambda) = u^{\lambda-\xi}c(\lambda-\xi,R)$$

holds whenever $\lambda-\xi \geqslant -(R-1)$, since both sides of this equality vanish for $\lambda-\xi = -1,-2,\ldots,-(R-1)$.

Let us analyze our proposed formula (2.3) in this example. We first write out the element $s[F,\Gamma](\lambda)$ explicitly. The function $F(z)$ has just one pole p modulo $2\pi\mathrm{i}\Gamma$; it is given by the equation $\mathrm{e}^p = u^{-1}$. Thus we have

$$s[F,\Gamma](\lambda) = u^{\lambda-\xi}\,\mathrm{Tres}\,\frac{\mathrm{e}^{(\lambda-\xi)z}}{(1-\mathrm{e}^{-z})^R},$$

which leads to

$$s[F,\Gamma](\lambda) = u^{\lambda-\xi}c(\lambda-\xi,R)\frac{1}{z}.$$

Now assume that $\lambda \in \mathbb{Z}$ and we picked a chamber $\mathfrak{c}$ such that $(\lambda+\square(F)^0)\cap\mathfrak{c}$ is not empty.

First we consider the case $\mathfrak{c} = \mathfrak{c}^+$. Here

$$J\big\langle \mathfrak{c}^+, s[F,\Gamma](\lambda)\big\rangle_{\mathrm{vol}_{\Gamma^*}} = u^{\lambda-\xi}c(\lambda-\xi,R).$$

Since $(\lambda + \square(F)^0) \cap \mathfrak{c}^+$ is nonempty, there exists $\mu \in \square(F)^0$ such that $\lambda + \mu > 0$. As $\mu + \xi = t$ with $0 < t < R$, this implies that $\lambda - \xi \geqslant -(R-1)$. This is consistent with our computation of $\mathrm{Coeff}(F, \lambda)$ above.

Assume now that $(\lambda + \square(F)^0) \cap \mathfrak{c}^-$ is not empty. Now we have

$$J\big\langle \mathfrak{c}^-, s[F, \Gamma](\lambda)\big\rangle_{\mathrm{vol}_{\Gamma^*}} = 0.$$

Since $(\lambda + \square(F)^0) \cap \mathfrak{c}^-$ is nonempty, there exists $\mu \in \square(F)^0$ such that $\lambda + \mu < 0$. As $\mu + \xi = t$ with $0 < t < R$, this implies that $\lambda - \xi < 0$. Again, this is consistent with (2.4).

We now return to the proof of the theorem.

Proof. If $(\lambda + \square(F)^0) \cap \mathfrak{c}$ is nonempty, then we can choose a nonspecial element $\mu \in \square(F)^0$ such that $\lambda + \mu \in \mathfrak{c}$.

By Proposition 1.12, there is a μ-admissible decomposition of F as a sum of functions $g(\xi, \sigma, \mathbf{h}, \mathbf{u})$ with $\sigma \in \mathcal{B}(\Delta)$. Furthermore, the element μ still belongs to $\square(g(\xi, \sigma, \mathbf{h}, \mathbf{u}))^0$. It is thus sufficient to prove the theorem in the case $F = g(\xi, \sigma, \mathbf{h}, \mathbf{u})$.

Let $\sigma = \{\alpha_1, \alpha_2, \ldots, \alpha_n\}$ and $\xi \in \Gamma^*$. Then we have

$$F(z) = \frac{\mathrm{e}^{\langle \xi, z\rangle}}{(1 - u_1 \mathrm{e}^{\langle \alpha_1, z\rangle})^{h_1} \cdots (1 - u_n \mathrm{e}^{\langle \alpha_n, z\rangle})^{h_n}}.$$

Let $C(\sigma)$ be the cone generated by σ and $\mathbb{Z}\sigma$ the sublattice of Γ^* generated by σ. Then $C(\sigma) \cap \mathbb{Z}\sigma$ is the set of elements $\lambda \in V^*$ of the form $\lambda = \sum_{i=1}^n k_i \alpha_i$, where k_i are nonnegative integers. Then it easily follows from the result (2.4) in the one-dimensional case that we have

$$\mathrm{Coeff}(F, \lambda) = \begin{cases} 0, & \text{if } k_i < 0 \text{ for some } i,\ 1 \leqslant i \leqslant n, \\ u_1^{k_1} c(k_1, h_1) \cdots u_n^{k_n} c(k_n, h_n), & \text{if } k_i \geqslant 1 - h_i,\ i = 1, \ldots, n, \end{cases} \tag{2.5}$$

where $\lambda - \xi = \sum_{i=1}^n k_i \alpha_i$ and $k_i \in \mathbb{Z}$, $i = 1, \ldots, n$.

We now compute $s[F, \Gamma](\lambda)$. The set of poles $\mathrm{SP}(F, \Gamma)$ of the function F is given by

$$\mathrm{SP}(F, \Gamma) = \big\{ p \in V_{\mathbb{C}} \bigm| \mathrm{e}^{\langle \alpha_k, p\rangle} = u_k^{-1},\ \text{for } 1 \leqslant k \leqslant n \big\}. \tag{2.6}$$

Choose an element p_0 in this set and again denote by $(\mathbb{Z}\sigma)^*$ the dual lattice to $\mathbb{Z}\sigma$. Then for any $s \in (\mathbb{Z}\sigma)^*$, the point $p_0 + 2\mathrm{i}\pi s$ of $V_{\mathbb{C}}$ still satisfies $\mathrm{e}^{\langle \alpha_k, p_0 + 2\mathrm{i}\pi s\rangle} = u_k^{-1}$. Thus $\mathrm{SP}(F, \Gamma) = p_0 + 2\mathrm{i}\pi(\mathbb{Z}\sigma)^*$.

We have

$$s[F, \Gamma](\lambda) = \sum_{p \in \mathrm{RSP}(F, \Gamma)} \mathrm{e}^{\langle \xi - \lambda, p\rangle}\, \mathrm{Tres}\, \frac{\mathrm{e}^{\langle \lambda - \xi, z\rangle}}{\prod_{k=1}^n (1 - \mathrm{e}^{-\langle \alpha_k, z\rangle})^{h_k}}.$$

Since $\mathrm{RSP}(F,\Gamma)$ is a set of representatives of the set $\mathrm{SP}(F,\Gamma)$ modulo the lattice $2\pi\mathrm{i}\Gamma$, using (2.6), we can write

$$\sum_{p\in\mathrm{RSP}(F,\Gamma)} \mathrm{e}^{\langle\xi-\lambda,p\rangle} = \mathrm{e}^{\langle\xi-\lambda,p_0\rangle} \sum_{m\in(\mathbb{Z}\sigma)^*/\Gamma} \mathrm{e}^{2\mathrm{i}\pi\langle\xi-\lambda,m\rangle}.$$

This sum is nonzero if and only if $\xi-\lambda\in\mathbb{Z}\sigma$. If $\lambda-\xi=\sum_{i=1}^n k_i\alpha_i$ with $k_i\in\mathbb{Z}$, then

$$\mathrm{e}^{\langle\xi-\lambda,p_0\rangle} = \mathrm{e}^{-\sum_{i=1}^n k_i\langle\alpha_i,p_0\rangle} = u_1^{k_1}\cdots u_n^{k_n}.$$

We thus obtain:

- $s[F,\Gamma](\lambda)$ is equal to 0 if $\lambda-\xi$ is not in $\mathbb{Z}\sigma$;
- If $\lambda-\xi=\sum_{i=1}^n k_i\alpha_i$ with $k_i\in\mathbb{Z}$, then

$$s[F,\Gamma](\lambda) = |\Gamma^*/\mathbb{Z}\sigma|\prod_{i=1}^n u_i^{k_i}c(k_i,h_i)\frac{1}{\prod_{i=1}^n\alpha_i}.$$

Now we proceed to computing the Jeffrey–Kirwan residues. Let $\lambda\in\Gamma^*$ and let $\mathfrak{c}$ be a chamber such that $(\lambda+\square(F)^0)\cap\mathfrak{c}\neq\emptyset$. This means that there is $\mu\in V^*$ such that $\lambda+\mu\in\mathfrak{c}$ and $\mu+\xi=\sum_{i=1}^n t_i\alpha_i$ with $0<t_i<h_i$.

There are two cases: either $\mathfrak{c}\subset C(\sigma)$ or $\mathfrak{c}\cap C(\sigma)=\emptyset$. If $\mathfrak{c}\subset C(\sigma)$, then we can conclude that $\lambda-\xi=\sum_{i=1}^n x_i\alpha_i$, where x_i are rational numbers and $x_i>-h_i$, $i=1,\dots,n$. On the other hand, we have

- $J\langle\mathfrak{c},s[F,\Gamma](\lambda)\rangle_{\mathrm{vol}_{\Gamma^*}}=0$ if $\lambda-\xi\notin\mathbb{Z}\sigma$.
- If $\lambda-\xi=\sum_{i=1}^n k_i\alpha_i$ with $k_i\in\mathbb{Z}$, then $J\langle\mathfrak{c},s[F,\Gamma](\lambda)\rangle_{\mathrm{vol}_{\Gamma^*}}$ factors:

$$|\Gamma^*/\mathbb{Z}\sigma|\prod_{i=1}^n u_i^{k_i}c(k_i,h_i)J\left\langle\mathfrak{c},\frac{1}{\prod_{i=1}^n\alpha_i}\right\rangle_{\mathrm{vol}_{\Gamma^*}} = \frac{|\Gamma^*/\mathbb{Z}\sigma|}{\mathrm{vol}_{\Gamma^*}(\sigma)}\prod_{i=1}^n u_i^{k_i}c(k_i,h_i).$$

It easy to see from the definitions that $\mathrm{vol}_{\Gamma^*}(\sigma)=|\Gamma^*/\mathbb{Z}\sigma|$, hence

$$J\big\langle\mathfrak{c},s[F,\Gamma](\lambda)\big\rangle_{\mathrm{vol}_{\Gamma^*}} = \prod_{i=1}^n u_i^{k_i}c(k_i,h_i).$$

This is consistent with the expression (2.5) for $\mathrm{Coeff}(F,\lambda)$, as $\lambda-\xi=\sum_{i=1}^n k_i\alpha_i$, where k_i are integers and $k_i\geqslant 1-h_i$.

In the case $\mathfrak{c}\cap C(\sigma)=\emptyset$, we can conclude that $\lambda-\xi=\sum_{i=1}^n x_i\alpha_i$, where at least one of the numbers x_i is negative. This is again consistent with (2.5), since by definition $J\langle\mathfrak{c},s[F,\Gamma](\lambda)\rangle_{\mathrm{vol}_{\Gamma^*}}=0$.

Thus we covered all cases and the theorem is proved. □

3. Ehrhart polynomials

3.1. Partition polytopes and the vector partition function

Let V be a real vector space of dimension n endowed with a lattice Γ, and let Φ be a sequence of *not necessarily distinct* elements $[\beta_1, \dots, \beta_N]$ of the dual lattice $\Gamma^* \subset V^*$. We assume that Φ generates V^*. Denote by ρ the surjective linear map from $\mathbb{R}^N$ to the vector space V^* defined by $\rho(w_k) := \beta_k$, $1 \leqslant k \leqslant N$, where $\{w_k\}_{k=1}^N$ is the standard basis of $\mathbb{R}^N$.

The map ρ may be written as

$$\rho(x_1, x_2, \dots, x_N) = \sum_{i=1}^N x_i \beta_i .$$

We denote by C_N^+ the closed convex cone in $\mathbb{R}^N$ generated by $w_1, \dots, w_N$, and we set $C(\Phi) := \rho(C_N^+)$, the cone generated by $(\beta_1, \dots, \beta_N)$. We assume here that $\rho^{-1}(0) \cap C_N^+ = \{0\}$. Then 0 is not in the convex hull of the vectors β_k and $C(\Phi)$ is an acute cone.

Definition 3.1. For $a \in V^*$, we define the *partition polytope* $\Pi_\Phi(a)$ by

$$\Pi_\Phi(a) := \rho^{-1}(a) \cap C_N^+ .$$

The set $\Pi_\Phi(a)$ is the convex polytope consisting of all solutions $(x_1, x_2, \dots, x_N)$ of the equation

$$\sum_{k=1}^N x_k \beta_k = a$$

in nonnegative real numbers x_k. In particular, the polytope $\Pi_\Phi(a)$ is empty if a is not in the cone $C(\Phi)$.

When $V = \mathbb{R}e$ is one-dimensional, and $\Delta = [b_1 e^*, \dots, b_N e^*]$ where b_k are positive integers, the polytope $\Pi_\Phi(a)$ is the $(N-1)$-dimensional simplex consisting of the intersection of the hyperplane $\sum_{i=1}^N b_i x_i = a$ with the positive quadrant.

Denote by $\mathbb{Z}\Phi$ the lattice in V^* generated by Φ; naturally $\mathbb{Z}\Phi \subset \Gamma^*$. Then the map ρ sends the standard lattice $\mathbb{Z}^N \subset \mathbb{R}^N$ to the lattice $\mathbb{Z}\Phi$.

For a general λ in the lattice Γ^*, the vertices of the polytope $\Pi_\Phi(\lambda)$ are only rational rather than integral.

Example 7. Set $V = \mathbb{R}e$ with $\Gamma = \mathbb{Z}e$, $\beta_1 = 2e^*$ and $\beta_2 = 3e^*$. Let λ be a nonnegative integer. Then the polytope $\Pi_\Phi(\lambda e^*)$ consists of the set $\{(x_1, x_2) \mid x_1 \geqslant 0,\ x_2 \geqslant 0,\ 2x_1 + 3x_2 = \lambda\}$. The vertices of $\Pi(\lambda)$ are $(\lambda/2, 0)$ and $(0, \lambda/3)$, so they are integral if and only if λ is multiple of 6.

Let $\Delta = \{\alpha_1, \dots, \alpha_R\}$ be a set of linear forms from Γ^* such that

- each element of Δ is a *positive* multiple of an element of the sequence Φ;
- for every β_i in Φ, there is a unique $\alpha_j \in \Delta$ which is a multiple of β_i.

Note that it is possible that $R < N$.

For $\mathbf{j}$ a subset of $\{1, 2, \ldots, N\}$, we denote by $C_{\mathbf{j}}^+$ the closed convex cone in $\mathbb{R}^N$ generated by the set $\{w_j \mid j \in \mathbf{j}\}$, and by $C(\Phi_{\mathbf{j}})$ the closed convex cone in V^* generated by the set $\{\beta_j \mid j \in \mathbf{j}\}$.

For $\lambda \in \Gamma^*$, denote by $\iota_\Phi(\lambda)$ the number of points with integral coordinates in $\Pi_\Phi(\lambda)$. Thus $\iota_\Phi(\lambda)$ is the number of solutions of the equation $\sum_{k=1}^N x_k\beta_k = \lambda$ in *nonnegative integers* x_k. The function $\lambda \mapsto \iota_\Phi(\lambda)$ is called the *vector partition function* associated to Φ. The number $\iota_\Phi(\lambda)$ is zero if λ does not belong to $C(\Phi) \cap \mathbb{Z}\Phi$.

Recall the definition of the space of meromorphic functions $M^{\Gamma\mathcal{A}}$ defined in Section 1.2 and the expansion map r^+ defined in Section 2.1. Let

$$F_\Phi = \frac{1}{\prod_{i=1}^N (1 - \mathrm{e}^{\beta_i})}.$$

This function is in the ring $M^{\Gamma\mathcal{A}}$ and, almost by definition, the expansion $r^+(F_\Phi)$ is the generating function for ι_Φ:

$$r^+(F_\Phi) = \sum_{\lambda \in \Gamma^*} \iota_\Phi(\lambda)\mathrm{e}^\lambda.$$

We can thus apply Theorem 2.3 and obtain a residue formula for $\iota_\Phi(\lambda)$. We give this formula below in a slightly more precise form.

Similarly to the notation introduced earlier, we denote by $\mathcal{B}(\Phi)$ the set of linearly independent n-tuples of elements of the sequence Φ. For each such basis $\sigma \in \mathcal{B}(\Phi)$ of V^*, we denote by $C(\sigma)$ the cone generated by the elements of σ and by $G(\sigma, \Gamma)$ the lattice $2\mathrm{i}\pi(\mathbb{Z}\sigma)^*$ so that

$$G(\sigma, \Gamma) = \left\{ p \in V_{\mathbb{C}} \;\middle|\; \mathrm{e}^{\langle \beta, p\rangle} = 1, \text{ for all } \beta \in \sigma \right\}.$$

Clearly, $2\pi\mathrm{i}\Gamma \subset G(\sigma, \Gamma)$, and we may choose a finite, reduced set of elements $RG(\sigma, \Gamma) \subset G(\sigma, \Gamma)$, which is in one-to-one correspondence with the finite factor group $G(\sigma, \Gamma)/2\pi\mathrm{i}\Gamma$.

Given a chamber $\mathfrak{c}$, we denote by $\mathcal{B}(\Phi, \mathfrak{c})$ the set of $\sigma \in \mathcal{B}(\Phi)$ such that $\mathfrak{c} \subset C(\sigma)$ and define

$$G(\Phi, \mathfrak{c}, \Gamma) = \bigcup_{\sigma \in \mathcal{B}(\Phi, \mathfrak{c})} G(\sigma, \Gamma) \quad \text{and} \quad RG(\Phi, \mathfrak{c}, \Gamma) = \bigcup_{\sigma \in \mathcal{B}(\Phi, \mathfrak{c})} RG(\sigma, \Gamma).$$

Introduce the convex polytope

$$\square(\Phi) = \sum_{i=1}^N [0, 1]\beta_i.$$

Now we are in position to formulate the appropriate version of our Theorem 2.3.

Theorem 3.1. *Denote by $\iota[\mathfrak{c}, \Phi]$ the periodic-polynomial function on Γ^* given by*

$$\sum_{p \in RG(\Phi,\mathfrak{c},\Gamma)} \mathrm{e}^{-\langle \lambda, p\rangle} J\left\langle \mathfrak{c}\, \mathrm{Tres}\left(\frac{\mathrm{e}^{\langle \lambda, z\rangle}}{\prod_{i=1}^{N}(1-\mathrm{e}^{\langle \beta_i, p\rangle}\mathrm{e}^{-\langle \beta_i, z\rangle})}\right)\right\rangle \mathrm{vol}_{\Gamma^*}.$$

Then, for any $\lambda \in (\mathfrak{c} - \square(\Phi)) \cap \Gamma^*$, we have

$$\iota_\Phi(\lambda) = \iota[\mathfrak{c}, \Phi](\lambda). \tag{3.1}$$

Remark 3.1. We assumed that Φ linearly generates V^*, hence if $\mathfrak{c}$ is a big chamber contained in $C(\Phi)$, then the set $\mathfrak{c} - \square(\Phi)$ contains $\bar{\mathfrak{c}}$. This means that the formula (3.1) is in particular true for $\lambda \in \bar{\mathfrak{c}} \cap \Gamma^*$. The set $\mathfrak{c}^{\mathrm{null}} - \square(\Phi)$ remains equal to $\mathfrak{c}^{\mathrm{null}}$ and does not touch the boundary of $C(\Phi)$.

Proof. The set $\mathfrak{c}$ being open, the set $\mathfrak{c} - \square(\Phi)$ coincide with $\mathfrak{c} - \square(\Phi)^0$. The sum appearing in the theorem is a restricted version of the sum in (2.2) defining $s[F_\Phi, \Gamma]$. Note that the set of poles $\mathrm{SP}(F_\Phi, \Gamma)$ appearing in that definition specializes to the set $\bigcup_{\sigma \in \mathcal{B}(\Phi)} G(\sigma, \Gamma)$ in our case.

Thus in order to deduce the statement of the theorem from Theorem 2.3, we only need to check that if $p \in V_{\mathbb{C}}$ is such that $J\langle \mathfrak{c}, \mathrm{Tres}(\mathrm{e}^{\langle \lambda, z\rangle} F_\Phi(p-z))\rangle_{\mathrm{vol}_{\Gamma^*}}$ does not vanish, then p is necessarily in $G(\Phi, \mathfrak{c}, \Gamma)$. Indeed, by Lemma 1.3, if $\mathrm{Tres}(\mathrm{e}^{\langle \lambda, z\rangle} F_\Phi(p-z)) \neq 0$, then the set $\Delta(p) = \{\beta \in \Phi \mid \langle \beta, p\rangle \in 2\pi \mathrm{i}\mathbb{Z}\}$ has to span V^*. The function $z \mapsto \mathrm{e}^{\langle \lambda, z\rangle} F_\Phi(p-z)$ is in the space $\widehat{R}_{\mathcal{A}(\Delta(p))}$. Its total residue can be written as a sum of functions $\phi_\sigma \in S_{\mathcal{A}(\Delta(p))}$ with $\sigma \in \mathcal{B}(\Delta(p))$. Now if

$$J\big\langle \mathfrak{c}, \mathrm{Tres}\big(\mathrm{e}^{\langle \lambda, z\rangle} F_\Phi(p-z)\big)\big\rangle_{\mathrm{vol}_{\Gamma^*}} \neq 0,$$

then there exists a basis $\sigma \in \mathcal{B}(\Delta(p))$ such that $\mathfrak{c} \subset C(\sigma)$. This implies that p is in $G(\Phi, \mathfrak{c}, \Gamma)$. $\square$

Remark 3.2. To compute the residue formula of Theorem 3.1 for $\iota_\Phi(\lambda)$, a precise determination of the set $RG(\Phi, \mathfrak{c}, \Gamma)$ is not necessary. We can indeed sum over any bigger set, the extra terms contributing 0 to the sum. For example, we can sum over a set of representatives of the finite group of n_Φth roots of unity of the torus $V_{\mathbb{C}}/2\mathrm{i}\pi\Gamma$, where n_Φ is such that $n_\Phi \Gamma^* \subset \mathbb{Z}\sigma$ for any $\sigma \in \mathcal{B}(\Phi)$. In particular, if the system Φ is unimodular, then our set of p's reduces to a single point $p = 0$. In this case, we obtain that the vector partition function $\iota_\Phi(\lambda)$ is given by the polynomial

$$J\left\langle \mathfrak{c}, \mathrm{Tres}\left(\frac{\mathrm{e}^{\langle \lambda, z\rangle}}{\prod_{i=1}^{N}(1-\mathrm{e}^{-\langle \beta_i, z\rangle})}\right)\right\rangle_{\mathrm{vol}_{\Gamma^*}}.$$

on each sector $(\mathfrak{c} - \square(\Phi)) \cap \Gamma^*$.

Let us comment on the novel aspects of Theorem 3.1. Given $\lambda \in C(\Phi) \cap \Gamma^*$, the function $k \mapsto \iota_\Phi(k\lambda)$, $k = 0, 1, 2, \ldots$, counts the number of integral points in the dilated polytope $k\Pi_\Phi(\lambda)$ of the rational polytope $\Pi_\Phi(\lambda)$. Clearly, the ray $\{k\lambda\}$ remains in the closure of a chamber of $C(\Phi)$, and $k \mapsto \iota_\Phi(k\lambda)$ is a periodic polynomial function of k called the Ehrhart periodic-polynomial [11] of the rational polytope $\Pi_\Phi(\lambda)$. When V is one-dimensional, this case corresponds to enumeration of lattice points in rational simplices and is the cornerstone of Ehrhart's work (see [12], and references there). The vector partition function in this case is called the restricted partition function. Our formula of Theorem 3.1 for the restricted partition function clearly coincides with results summarized in Comtet [9, Théorème B, page 122], since we use the same method of generating functions and partial fraction decompositions, in a multivariate setting.

Theorem 3.1 gives an explicit residue formula for the number of integral points in the polytope $\Pi_\Phi(\lambda)$, when λ now varies in the cone $C(\Phi)$. If $\mathfrak{c}$ is a big chamber contained in $C(\Phi)$, this formula is periodic-polynomial on the "neighborhood" $\mathfrak{c} - \square(\Phi)$ of $\bar{\mathfrak{c}}$. This is somewhat surprising, as the combinatorial nature of the polytope $\Pi_\Phi(\lambda)$ changes, when crossing walls of the big chambers. Thus these different periodic-polynomial functions for the vector partition function on different sectors coincide for neighboring chambers in a strip containing their common boundary. Precisely, for two chambers $\mathfrak{c}_1$ and $\mathfrak{c}_2$, the periodic-polynomial functions $\iota[\Phi, \mathfrak{c}_1]$ and $\iota[\Phi, \mathfrak{c}_2]$ are equal on the set $\Gamma^* \cap (\mathfrak{c}_1 - \square(\Phi)) \cap (\mathfrak{c}_2 - \square(\Phi))$. This implies some divisibility properties of the function $\iota[\Phi, \mathfrak{c}_1] - \iota[\Phi, \mathfrak{c}_2]$ on adjacent chambers. We give some illustrative examples for these properties of $\iota[\Phi, \mathfrak{c}]$ in Appendix A.

The relation between the number of integral points and the volume of the polytope $\Pi_\Phi(\lambda)$ has been the subject of several investigations (see, e.g., [5,7,8,10,13,18]), starting with the fascinating results of Khovanskii and Pukhlikov [15].

Recall that in Baldoni and Vergne [2, Theorem 9], we discussed the Jeffrey–Kirwan residue formula for the volume of the polytope $\Pi_\Phi(a)$. Let $\mathfrak{c}$ be a big chamber contained in $C(\Phi)$. Denote by $v[\Phi, \mathfrak{c}, \mathrm{vol}]$ the polynomial function

$$v[\Phi, \mathfrak{c}, \mathrm{vol}](a) = J\left\langle \mathfrak{c}, \mathrm{Tres}\left(\frac{\mathrm{e}^{\langle a, z\rangle}}{\prod_{i=1}^N \langle \beta_i, z\rangle}\right)\right\rangle_{\mathrm{vol}}.$$

The volume of the polytope $\Pi_\Phi(a)$ is given by a locally polynomial formula in a. Explicitly, for a varying in the closure of the big chamber $\mathfrak{c}$:

$$\mathrm{volume}(\Pi_\Phi)(a) = v[\Phi, \mathfrak{c}, \mathrm{vol}](a). \tag{3.2}$$

The residue formula of Theorem 3.1 for $\iota_\Phi(\lambda)$ on the closure of the chamber $\mathfrak{c}$ may be immediately deduced from the results of Brion and Vergne [5] or Cappell and Shaneson [8] by applying Todd operators to the volume function given by the residue formula above (3.2). It is satisfying, however, to obtain "explicit" and very similar formulae for volumes of polytopes and for the number of integral points in polytopes by residue methods, in a parallel way. It is puzzling to see that the formula for the number of points holds in a larger set than we would guess from its continuous analogue, the volume function.

3.2. Minkowski sum of rational convex polytopes and families of partition polytopes

In this section, we briefly describe how to realize any rational convex polytope as a partition polytope $\Pi_\Phi(a)$.

Recall some standard conventions. Faces of a polytope Π of dimension r may have any codimension from 0 to r. A face of codimension 1 is called a *facet*. A face of dimension 0 is a *vertex*, a face of dimension 1 is an *edge*. The polytope Π is said to be simple if each vertex of Π is the source of exactly r edges. Given a rational polytope Π in a vector space endowed with a lattice Θ of full rank, a face f of Π is called *reticular* if the affine space spanned by f contains a point of Θ. In particular, a vertex is reticular if and only if it belongs to Θ. A rational polytope Π is *integral* if all its vertices belong to the lattice Θ.

Let Φ be again a sequence of N linear forms $[\beta_1, \dots, \beta_N]$ generating V^* and lying on the same side of a hyperplane. For a in the interior of $C(\Phi)$, the polytope $\Pi_\Phi(a)$ has dimension $N - n$.

We keep our earlier notations. For a basis $\sigma \in \mathcal{B}(\Phi)$ of V^*, we denote by v_σ the map from V^* to $\mathbb{R}^N$ defined by $v_\sigma(\beta_j) = w_j$ for all $\beta_j \in \sigma$. Clearly, $\rho \circ v_\sigma$ is the identity on V^*. If β_k is not in σ, the vector $w_k - v_\sigma(\beta_k)$ is in the subspace $\rho^{-1}(0)$.

Recall

Proposition 3.2 [5]. *Let $\mathfrak{c}$ be a big chamber contained in $C(\Phi)$.*

- *For any $a \in \mathfrak{c}$, the convex polytope $\Pi_\Phi(a)$ is simple, with vertices $v_\sigma(a)$, $\sigma \in \mathcal{B}(\Phi, \mathfrak{c})$. These vertices are all distinct, and the $(N - r)$ edges of $\Pi_\Phi(a)$ with source at the vertex $v_\sigma(a)$ are the vectors $w_k - v_\sigma(\beta_k)$, where $\beta_k \notin \sigma$.*
- *If $a \in \bar{\mathfrak{c}}$, then the vertices of the convex polytope $\Pi_\Phi(a)$ are the points $v_\sigma(a)$, $\sigma \in \mathcal{B}(\Phi, \mathfrak{c})$. Some of these points may coincide.*

Let $\lambda \in C(\Phi) \cap \mathbb{Z}\Phi$. Consider the function $k \mapsto \iota_\Phi(k\lambda)$, where k is a nonnegative integer. Now we will see that our formula (3.1) for the Ehrhart periodic-polynomial $E[\lambda](k) = \iota_\Phi(k\lambda)$ is actually polynomial in k if all the vertices of $\Pi_\Phi(\lambda)$ have integral coordinates. More generally, we will show that our formula is compatible with some of the results of [11,17,19] on the periodic-polynomial behavior of $E[\lambda](k)$.

Lemma 3.3. *If M is an integer such that $M\Pi_\Phi(\lambda)$ is integral, then $E[\lambda](k) = \sum_{\zeta^M=1} \zeta^k P_\zeta(k)$, where ζ varies over Mth roots of unity and P_ζ is a polynomial.*

Proof. After Theorem 3.1, we have

$$E[\lambda](k) = \sum_{p \in RG(\Phi, \mathfrak{c}, \Gamma)} \mathrm{e}^{-k\langle \lambda, p\rangle} P_{(p)}[\lambda](k),$$

where

$$P_{(p)}[\lambda](k) = J\left\langle \mathfrak{c}, \operatorname{Tres}\left(\frac{\mathrm{e}^{k\langle \lambda, z\rangle}}{\prod_{i=1}^N (1 - \mathrm{e}^{\langle \beta_i, p\rangle} \mathrm{e}^{-\langle \beta_i, z\rangle})} \right) \right\rangle_{\mathrm{vol}_{\Gamma^*}}.$$

We show that all exponentials $e^{-\langle\lambda,p\rangle}$ are Mth roots of unity. For each $p \in RG(\Phi, \mathfrak{c}, \Gamma)$, there exists $\sigma \in \mathcal{B}(\Phi, \mathfrak{c})$ such that p is a solution of the equations $e^{\langle\beta_i,p\rangle} = 1$ for all $\beta_i \in \sigma$. Since $\mathfrak{c} \subset C(\sigma)$, we can write $\lambda = \sum_{\beta_i\in\sigma} x_i\beta_i$, where each x_i is a rational nonnegative number. The point $v_\sigma(\lambda) = \sum_{\beta_i\in\sigma} x_i w_i$ is a vertex of the polytope $\Pi_\Phi(\lambda)$. If $Mv_\sigma(\lambda)$ is integral, then all numbers Mx_i are integers, so we have $e^{M\langle\lambda,p\rangle} = 1$ as p is a solution of the equations $e^{\langle\beta_i,p\rangle} = 1$ for all $\beta_i \in \sigma$. □

The notion of big chambers in $C(\Phi)$ is closely related to the Minkowski sum of the corresponding partition polytopes as follows.

Lemma 3.4. *Let $a, b \in C(\Phi)$. The Minkowski sum $\Pi_\Phi(a) + \Pi_\Phi(b)$ of the polytopes $\Pi_\Phi(a)$ and $\Pi_\Phi(b)$ is equal to the polytope $\Pi_\Phi(a + b)$ if and only if there exists a big chamber $\mathfrak{c}$ contained in $C(\phi)$ such that $a, b \in \bar{\mathfrak{c}}$.*

Proof. Clearly the polytope $\Pi_\Phi(a) + \Pi_\Phi(b)$ is a subset of the polytope $\Pi_\Phi(a + b)$.

Let $\mathfrak{c}$ be a chamber contained in $C(\Phi)$ such that $a, b \in \bar{\mathfrak{c}}$. Hence $a + b$ is in $\bar{\mathfrak{c}}$. Let us prove that $\Pi_\Phi(a + b)$ is equal to $\Pi_\Phi(a) + \Pi_\Phi(b)$. By the description of the vertices given in Proposition 3.2, any element $\mathbf{x}$ of the polytope $\Pi_\Phi(a + b)$ can be written as $\sum_{\sigma\in\mathcal{B}(\Phi,\mathfrak{c})} t_\sigma v_\sigma(a + b)$, with $\sum t_\sigma = 1$. Then we may write $\mathbf{x} = \mathbf{x}_1 + \mathbf{x}_2$, with $\mathbf{x}_1 = \sum_{\sigma\in\mathcal{B}(\Phi,\mathfrak{c})} t_\sigma v_\sigma(a)$ and $\mathbf{x}_2 = \sum_{\sigma\in\mathcal{B}(\Phi,\mathfrak{c})} t_\sigma v_\sigma(b)$, with $\mathbf{x}_1 \in \Pi_\Phi(a)$ and $\mathbf{x}_2 \in \Pi_\Phi(b)$.

Conversely, let $a, b \in C(\Phi)$ such that $\Pi_\Phi(a) + \Pi_\Phi(b) = \Pi_\Phi(a + b)$. Consider then a chamber $\mathfrak{c}$ contained in $C(\Phi)$ such that $a + b \in \bar{\mathfrak{c}}$. Let σ such that $\mathfrak{c} \subset C(\sigma)$. The point $v_\sigma(a+b)$, being in $\Pi_\Phi(a+b)$, can be written as $\mathbf{x}_1+\mathbf{x}_2$ with $\mathbf{x}_1 \in \Pi_\Phi(a)$ and $\mathbf{x}_2 \in \Pi_\Phi(b)$. Since those coordinates of $v_\sigma(a+b)$ corresponding to $\beta_k \notin \sigma$ are equal to 0, we see that the kth coordinate of $\mathbf{x}_1, \mathbf{x}_2$ vanish when $\beta_k \notin \sigma$. This implies that $\mathbf{x}_1 = v_\sigma(a)$ and $\mathbf{x}_2 = v_\sigma(b)$. Thus $a, b \in \bigcap_{\sigma\in\mathcal{B}(\Phi,\mathfrak{c})} C(\sigma) = \bar{\mathfrak{c}}$. The lemma is proved. □

When $(\lambda_1, \lambda_2, \ldots, \lambda_s)$ are elements of $\bar{\mathfrak{c}} \cap \Gamma^*$, and k_i are nonnegative integers, the polytope $\Pi_\Phi(k_1\lambda_1+k_2\lambda_2+\cdots+k_s\lambda_s)$ is a rational convex polytope which is the weighted Minkowski sum $k_1\Pi_\Phi(\lambda_1) + \cdots + k_s\Pi_\Phi(\lambda_s)$. As $(k_1\lambda_1 + \cdots + k_s\lambda_s)$ varies in $\bar{\mathfrak{c}}$, the function $\iota_\Phi(k_1\lambda_1 + \cdots + k_s\lambda_s)$ is a periodic-polynomial function of k_i. This extension of Ehrhart's result is well-known [16]. As in Lemma 3.3, if the polytopes $\Pi_\Phi(\lambda_k)$ have integral vertices, then the function $(k_1, k_2, \ldots, k_s) \mapsto \iota_\Phi(k_1\lambda_1 + k_2\lambda_2 + \cdots + k_s\lambda_s)$ is a polynomial function of $k_1, k_2, \ldots, k_s$.

Now recall briefly (cf. [5]) how any convex polytope Π can be embedded in a family $\Pi_\Phi(a)$ of partition polytopes.

Let E be a real vector space of dimension r. Let $\Pi \subset E$ be a convex polytope. We can always choose N vectors $u_k \in E^*$ and a sequence of real numbers $\mathbf{h} = (h_1, h_2, \ldots, h_N) \in \mathbb{R}^N$ such that $\Pi = \Pi(\mathbf{h})$, where

$$\Pi(\mathbf{h}) = \left\{ v \in E \;\middle|\; \langle u_k,\ v\rangle + h_k \geqslant 0,\ 1 \leqslant k \leqslant N \right\}.$$

As Π is compact, the vectors u_k generate E^*. We do not necessarily assume here that this set of inequalities is minimal. Consider the map $U : \mathbb{R}^N \to E^*$ defined by

$$(x_1, x_2, \ldots, x_N) \mapsto x_1 u_1 + x_2 u_2 + \cdots + x_N u_N,$$

and let V be the $n = (N - r)$-dimensional vector space $V = U^{-1}(0)$. The restrictions β_i of the linear coordinates x_i to the vector space V form a system Φ of elements of V^*. The elements β_i of the system Φ satisfy the equation $\langle u_1, v\rangle\beta_1 + \cdots + \langle u_N, v\rangle\beta_N = 0$ for all $v \in E$.

Lemma 3.5. *The polytope $\Pi(\mathbf{h})$ is isomorphic to the partition polytope $\Pi_\Phi(h_1\beta_1 + \cdots + h_N\beta_N)$.*

Proof. A point of the polytope $\Pi_\Phi(h_1\beta_1 + \cdots + h_N\beta_N)$ is a point $(l_1, l_2, \ldots, l_N) \in \mathbb{R}^N_+$ such that $l_1\beta_1 + l_2\beta_2 + \cdots + l_N\beta_N = h_1\beta_1 + \cdots + h_N\beta_N$. This implies that there exists a unique $v \in E$ such that $l_i - h_i = \langle u_i, v\rangle$, so that $\langle u_k, v\rangle + h_k = l_k \geqslant 0$ and v is in $\Pi(\mathbf{h})$. □

Assume now that E is endowed with a lattice Θ and that the polytope Π is rational. Then there exist vectors $u_k \in \Theta^*$ and integers h_k such that

$$\Pi(\mathbf{h}) = \left\{ v \in E \;\middle|\; \langle u_k, v\rangle + h_k \geqslant 0,\ 1 \leqslant k \leqslant N \right\}.$$

We can always assume, adding superfluous elements u_k to Θ^* if necessary, that $\langle u_k, v\rangle \in \mathbb{Z}$ if and only if $v \in \Theta^*$. Then the set of integral points in the polytope $\Pi_\Phi(h_1\beta_1 + \cdots + h_N\beta_N)$ is in bijection with the set of integral points in $\Pi(\mathbf{h})$.

More generally, let $\Pi_1, \Pi_2, \ldots, \Pi_k$ be a set of rational convex polytopes in E. The Minkowski sum $t_1\Pi_1 + t_2\Pi_2 + \cdots + t_s\Pi_s$, where each t_k is a nonnegative real number, can be described as a set $\{v \in E \mid \langle u_k, v\rangle + t_1 h_k^1 + t_2 h_k^2 + \cdots + t_s h_k^s \geqslant 0\}$. As before, we consider the map $U : \mathbb{R}^N \to E^*$ defined by

$$(x_1, x_2, \ldots, x_N) \mapsto x_1 u_1 + x_2 u_2 + \cdots + x_N u_N.$$

Let $V = U^{-1}(0)$ and Φ the system of linear forms obtained by the restrictions of the linear coordinates. Then the points $\lambda_i = \sum h_k^i \beta_k$ belong to the closure of a chamber contained in $C(\Phi)$, and the family $t_1\Pi_1 + t_2\Pi_2 + \cdots + t_s\Pi_s$ is a member of the family of partitions polytopes $\Pi_\Phi(a)$, where $a = t_1\lambda_1 + \cdots + t_s\lambda_s$ varies in the closure of a chamber contained in $C(\Phi)$.

Thus the results of this article give, in particular, "explicit periodic-polynomial formulae" for mixed enumerators as functions of the inequalities defining the family of Minkowski polytopes $t_1\Pi_1 + \cdots + t_s\Pi_s$.

3.3. Sums of exponentials over partition polytopes

Consider now a point $\mathbf{y} = (y_1, y_2, \ldots, y_N)$ in $\mathbb{C}^N$ and the exponential function $\mathrm{e}^{\langle \mathbf{y}, \mathbf{x} \rangle} = \mathrm{e}^{\sum_{i=1}^N x_i y_i}$ over $\mathbb{R}^N$. We consider the function

$$\mathcal{S}[\mathrm{e}^{\mathbf{y}}, \Phi](\lambda) = \sum_{\xi \in \Pi_\Phi(\lambda) \cap \mathbb{Z}^N} \mathrm{e}^{\langle \mathbf{y}, \xi \rangle}.$$

Let

$$F_{\Phi,\mathbf{y}}(z) = \frac{1}{\prod_{j=1}^N (1 - \mathrm{e}^{y_j} \mathrm{e}^{\langle \beta_j, z \rangle})}.$$

Almost by definition, the expansion $r^+(F_{\Phi,\mathbf{y}})$ is the generating function for $\mathcal{S}[\mathrm{e}^{\mathbf{y}}, \Phi]$:

$$r^+(F_{\Phi,\mathbf{y}}) = \sum_{\lambda \in \Gamma^*} \mathcal{S}[\mathrm{e}^{\mathbf{y}}, \Phi](\lambda) \mathrm{e}^{\lambda}.$$

Let $\sigma \in \mathcal{B}(\Phi)$. We introduce the set

$$G(\sigma, \mathbf{y}, \Gamma) = \left\{ p \in V_{\mathbb{C}} \;\middle|\; \mathrm{e}^{\langle \beta_j, p \rangle} = \mathrm{e}^{-y_j} \text{ for all } \beta_j \in \sigma \right\}.$$

Clearly, if $\gamma \in 2\pi \mathrm{i} \Gamma$ and $p \in G(\sigma, \mathbf{y}, \Gamma)$, then $p + \gamma \in G(\sigma, \mathbf{y}, \Gamma)$ and we may choose a finite, reduced set of elements $RG(\sigma, \mathbf{y}, \Gamma) \subset G(\sigma, \mathbf{y}, \Gamma)$, which is in one-to-one correspondence with the finite coset $G(\sigma, \mathbf{y}, \Gamma)/2\pi \mathrm{i} \Gamma$.

For a chamber $\mathfrak{c}$, we define $RG(\Phi, \mathbf{y}, \mathfrak{c}, \Gamma)$ to be the union of the sets $RG(\sigma, \mathbf{y}, \Gamma)$ over all bases $\sigma \in \mathcal{B}(\Phi)$ such that $\mathfrak{c} \subset C(\sigma)$.

Applying our Theorem 2.3, we obtain:

Theorem 3.6. *Let $\mathfrak{c}$ be a big chamber of a sequence $\Phi = [\beta_1, \ldots, \beta_N]$, and let $\mathbf{y} \in \mathbb{C}^N$. Denote by $\iota[\mathfrak{c}, \mathbf{y}, \Phi]$ the exponential-polynomial function on Γ^* equal to*

$$\sum_{p \in RG(\Phi, \mathbf{y}, \mathfrak{c}, \Gamma)} \mathrm{e}^{-\langle \lambda, p \rangle} J\left\langle \mathfrak{c}, \operatorname{Tres}\left(\frac{\mathrm{e}^{\langle \lambda, z \rangle}}{\prod_{i=1}^N (1 - \mathrm{e}^{\langle \beta_i, p \rangle} \mathrm{e}^{y_i} \mathrm{e}^{-\langle \beta_i, z \rangle})} \right) \right\rangle_{\mathrm{vol}_{\Gamma^*}}.$$

Then, for any $\lambda \in (\mathfrak{c} - \square(\Phi)) \cap \Gamma^*$, the function $\lambda \mapsto \mathcal{S}[\mathrm{e}^{\mathbf{y}}, \Phi](\lambda)$ is given by the exponential-polynomial formula

$$\mathcal{S}[\mathrm{e}^{\mathbf{y}}, \Phi](\lambda) = \iota[\mathfrak{c}, \mathbf{y}, \Phi](\lambda).$$

Let us compare this expression to the "explicit" formula of [3,4] for sums of exponentials over the integral points of a convex polytope for sufficiently generic $\mathbf{y}$.

Let $\sigma \in \mathcal{B}(\Phi, \mathfrak{c})$ and assume that $\mathbf{y}$ is sufficiently generic in the sense that for any basis $\sigma \in B(\Phi, \mathfrak{c})$ and for every $p \in G(\sigma, \mathbf{y}, \Gamma)$, we have $\mathrm{e}^{y_j} \mathrm{e}^{\langle \beta_j, p \rangle} = 1$ for all $\beta_j \in \sigma$, while

$\mathrm{e}^{y_k}\mathrm{e}^{\langle\beta_k,p\rangle} \neq 1$ for all $\beta_k \notin \sigma$. Then, for $p \in G(\sigma, \mathbf{y}, \Gamma)$, the function $z \mapsto F_{\Phi,\mathbf{y}}(p-z)$ is equal to

$$\frac{1}{\prod_{\beta_j\in\sigma}(1-\mathrm{e}^{-\langle\beta_j,z\rangle})}\prod_{\beta_k\notin\sigma}\frac{1}{(1-\mathrm{e}^{y_k}\mathrm{e}^{\langle\beta_k,p\rangle}\mathrm{e}^{-\langle\beta_k,z\rangle})},$$

and we obtain by Lemma 1.3

$$\mathrm{Tres}\big(\mathrm{e}^{\langle\lambda,z-p\rangle}F_{\Phi,\mathbf{y}}(p-z)\big) = \mathrm{e}^{-\langle\lambda,p\rangle}\prod_{k\notin\sigma}\frac{1}{(1-\mathrm{e}^{y_k}\mathrm{e}^{\langle\beta_k,p\rangle})}\frac{1}{\prod_{\beta_j\in\sigma}\beta_j}.$$

For $\mathbf{y}$ generic, all the subsets $G(\sigma, \mathbf{y}, \Gamma)$ are disjoint as σ varies in $\mathcal{B}(\Phi)$. Thus for generic $\mathbf{y}$ we obtain a formula $\mathcal{S}[\mathrm{e}^{\mathbf{y}}, \Phi](\lambda)$ as a linear combination of the pure exponential functions $\lambda \mapsto \mathrm{e}^{-\langle\lambda,p\rangle}$ associated to the elements $p \in RG(\Phi, \mathbf{y}, \mathfrak{c}, \Gamma)$.

Theorem 3.7. *Let $\mathfrak{c}$ be a chamber and $\mathbf{y}$ a generic element of $\mathbb{C}^N$. Let $E[\mathfrak{c}, \mathbf{y}, \Phi](\lambda)$ be the function of λ defined by*

$$\sum_{\sigma\in\mathcal{B}(\Phi,\mathfrak{c})}\frac{1}{\mathrm{vol}_{\Gamma^*}(\sigma)}\sum_{p\in RG(\sigma,\mathbf{y},\Gamma)}\mathrm{e}^{-\langle\lambda,p\rangle}\prod_{\beta_k\notin\sigma}\frac{1}{(1-\mathrm{e}^{y_k}\mathrm{e}^{\langle\beta_k,p\rangle})}.$$

Then, for $\lambda \in (\mathfrak{c} - \square(\Phi)) \cap \Gamma^*$, we have the "explicit" formula

$$\mathcal{S}[\mathrm{e}^{\mathbf{y}}, \Phi](\lambda) = E[\mathfrak{c}, \mathbf{y}, \Phi](\lambda).$$

Remark 3.3. On the set $\bar{\mathfrak{c}} \cap \Gamma^*$, it is possible to deduce this formula from the Baum–Fulton–MacPherson equivariant Riemann–Roch formula applied to the (possibly singular) toric variety and its holomorphic line bundle associated with the polytope $\Pi_\Phi(\lambda)$, at least when this polytope is integral. This dictionary between toric varieties and rational polytopes is used in several proofs of formulae for sums of functions over integral points of convex integral polytopes [7,13,18].

Let us rewrite the formula of Theorem 3.7 in geometric terms in the case when Φ is a unimodular system and λ is in an open chamber $\mathfrak{c}$ of $C(\Phi)$. First we note that for any $\sigma \in \mathcal{B}(\Phi, \mathfrak{c})$ each set $RG(\sigma, \mathbf{y}, \Gamma)$ consists of just one element and the number $\mathrm{vol}_{\Gamma^*}(\sigma)$ is equal to 1. Thus the formula for $E[\mathfrak{c}, \mathbf{y}, \Phi]$ is simply indexed by the set $\mathcal{B}(\Phi, \mathfrak{c})$, which also indexes the vertices of the polytope $\Pi_\Phi(\lambda)$. Let $\sigma \in \mathcal{B}(\Phi, \mathfrak{c})$ and p be an element such that $\mathrm{e}^{\langle\beta_i,p\rangle} = \mathrm{e}^{-y_i}$, for all $\beta_i \in \sigma$. If $\lambda = \sum_{\beta_i\in\sigma} x_i\beta_i$, then $\mathrm{e}^{-\langle\lambda,p\rangle} = \mathrm{e}^{\sum_{\beta_i\in\sigma} x_i y_i} = \mathrm{e}^{\langle\mathbf{y},v_\sigma(\lambda)\rangle}$ is the value of the exponential function $\mathrm{e}^{\mathbf{y}}$ at the vertex $v_\sigma(\lambda)$ of the polytope $\Pi_\Phi(\lambda)$. Similarly, the edges $a_k^\sigma = w_k - s_\sigma(\beta_k)$ passing through $v_\sigma(\lambda)$ are such that $\mathrm{e}^{\langle\mathbf{y},a_k^\sigma\rangle} = \mathrm{e}^{y_k}\mathrm{e}^{\langle\beta_k,p\rangle}$. Thus, for the simple polytope $\Pi_\Phi(\lambda)$ associated to an unimodular system Φ, we obtain

$$\sum_{\xi\in\Pi_\Phi(\lambda)\cap Z^N}\mathrm{e}^{\langle\mathbf{y},\xi\rangle} = \sum_v\frac{\mathrm{e}^{\langle\mathbf{y},v\rangle}}{\prod_{a_j(v)}(1-\mathrm{e}^{\langle a_j(v),\mathbf{y}\rangle})},$$

where v varies over the vertices of the polytope $\Pi_\Phi(\lambda)$ and $a_j(v)$ varies over the primitive edges of the polytope with source at the vertex v. One may recognize here the localization formula for the equivariant index applied to the smooth toric variety and its holomorphic line bundle associated with the polytope $\Pi_\Phi(\lambda)$.

In the general case, Theorem 3.7 implies formula (3.4.1) of Brion and Vergne [5]. Again, our results here imply that this formula holds on a larger set of λs, on which the elements $v_\sigma(\lambda)$ are not necessarily vertices of the polytope $\Pi_\Phi(\lambda)$.

3.4. Summing the values of an exponential-polynomial function over partition polytopes

We denote $\mathcal{S}[f,\Phi](\lambda)=\sum_{\xi\in\Pi_\Phi(\lambda)\cap\mathbb{Z}^N} f(\xi)$ for an exponential-polynomial function f on $\mathbb{R}^N$. Recall the definition of the polynomial functions

$$c(x,h)=\frac{1}{(h-1)!}(x+1)(x+2)\cdots\big(x+(h-1)\big),$$

(where $c(x,1)=1$) which form a basis of polynomial functions on $\mathbb{R}$ as h runs through the positive integers. Let again $\Gamma\subset V$ be a lattice in an n-dimensional vector space, and Φ be a sequence $[\beta_1,\dots,\beta_N]$ of linear forms from Γ^* lying on the same side of an hyperplane and generating V^*. Also, fix $\mathbf{y}=(y_1,y_2,\dots,y_N)\in\mathbb{C}^N$ and let $\mathbf{h}=(h_1,h_2,\dots,h_N)$ be a list of positive integers. Consider the exponential-polynomial function on $\mathbb{R}^N$ given by

$$f_{\mathbf{h},\mathbf{y}}(\mathbf{x})=\mathrm{e}^{\langle\mathbf{y},\mathbf{x}\rangle}\prod_{i=1}^{N}c(x_i,h_i).$$

The generating function for the function $\mathcal{S}[f_{\mathbf{h},\mathbf{y}},\Phi]=\sum_{\xi\in\Pi_\Phi(\lambda)} f_{\mathbf{h},\mathbf{y}}(\xi)$ is the function

$$F_{\Phi,\mathbf{y},\mathbf{h}}(z)=\frac{1}{\prod_{i=1}^{N}(1-\mathrm{e}^{y_i}\mathrm{e}^{\langle\beta_i,z\rangle})^{h_i}}.$$

Note that the set $\square(F_{\Phi,\mathbf{y},\mathbf{h}})$ is the set $\square(\Phi,\mathbf{h})=\sum_{i=1}^{N}[0,1]h_i\beta_i$. It always contains $\square(\Phi)$.

Theorem 2.3 states:

Theorem 3.8. *Let $\mathfrak{c}$ be a chamber, $\mathbf{y}\in\mathbb{C}^N$ and $\mathbf{h}\in\mathbb{N}^N$. Let $\mathcal{P}[\mathfrak{c},\mathbf{y},\mathbf{h},\Phi]$ be the exponential-polynomial function on Γ^* equal to*

$$\sum_{p\in RG(\Phi,\mathbf{y},\mathfrak{c},\Gamma)}\mathrm{e}^{-\langle\lambda,p\rangle}J\left\langle\mathfrak{c},\operatorname{Tres}\left(\frac{\mathrm{e}^{\langle\lambda,z\rangle}}{\prod_{i=1}^{N}(1-\mathrm{e}^{\langle\beta_i,p\rangle}\mathrm{e}^{y_i}\mathrm{e}^{-\langle\beta_i,z\rangle})^{h_i}}\right)\right\rangle_{\mathrm{vol}_{\Gamma^*}}.$$

Then, for any $\lambda\in(\mathfrak{c}-\square(\Phi,\mathbf{h}))\cap\Gamma^*$, the function $\lambda\mapsto\mathcal{S}[f_{\mathbf{h},\mathbf{y}},\Phi](\lambda)$ is given by the exponential-polynomial formula

$$\mathcal{S}[f_{\mathbf{h},\mathbf{y}},\Phi]=\mathcal{P}[\mathfrak{c},\mathbf{y},\mathbf{h},\Phi](\lambda).$$

In particular, if $\mathfrak{c}$ is a chamber contained in $C(\Phi)$, then for any exponential-polynomial function $f \in \mathrm{EP}(\mathbb{R}^N)$, the function $\lambda \mapsto \mathcal{S}[f, \Phi](\lambda)$ is given by an exponential-polynomial function $\mathcal{P}[\mathfrak{c}, f, \Phi]$ for $\lambda \in (\mathfrak{c} - \square(\Phi)) \cap \Gamma^*$. The set $(\mathfrak{c} - \square(\Phi))$ contains $\bar{\mathfrak{c}}$.

Acknowledgments

We would like to thank Michel Brion, Velleda Baldoni-Silva for helpful discussions and Charles Cochet for his drawings and his careful reading of the manuscript.

Appendix A. Examples

Let V be a two-dimensional real vector space with basis (e_1, e_2); then the dual vector space V^* has basis e_1^*, e_2^*. Sometimes we denote a vector $a_1 e_1^* + a_2 e_2^*$ in V^* simply by (a_1, a_2); similarly (z_1, z_2) stands for $z_1 e_1 + z_2 e_2$ in V. We take the lattice Γ to be $\mathbb{Z}e_1 \oplus \mathbb{Z}e_2$.

A.1. The arrangement A_2

Let

$$\Phi = \{e_1^*, e_2^*, e_1^* + e_2^*\}.$$

The space $R_{\mathcal{A}(\Phi)}$ consists of rational functions $f(z_1, z_2)$ on $V_{\mathbb{C}}$ with denominator a product of powers of the linear forms z_1, z_2, $z_1 + z_2$. The system Φ is unimodular.

The closed cone $C(\Phi)$ generated by Φ is the first quadrant $\{a_1 \geqslant 0, a_2 \geqslant 0\}$. There are three big chambers for the system Φ: the exterior of the cone $C(\Phi)$ denoted by $\mathfrak{c}^{\mathrm{null}}$, the chamber $\mathfrak{c}^1 = \{a_2 > 0, a_1 > a_2\}$ and the chamber $\mathfrak{c}^2 = \{a_1 > 0, a_2 > a_1\}$.

The linear forms $J(\mathfrak{c}_1, \mathrm{d}a)$ and $J(\mathfrak{c}_2, \mathrm{d}a)$ are easily computed. For a rational function $f(z_1, z_2)$ in the space $R_{\mathcal{A}(\Phi)}$, we have

$$J\langle \mathfrak{c}_1, \mathrm{Tres}\, f\rangle_{\mathrm{vol}_{\Gamma^*}} = \operatorname*{Res}_{z_2=0} \operatorname*{Res}_{z_1=0} \big(f(z_1, z_2)\, \mathrm{d}z_1\, \mathrm{d}z_2\big),$$

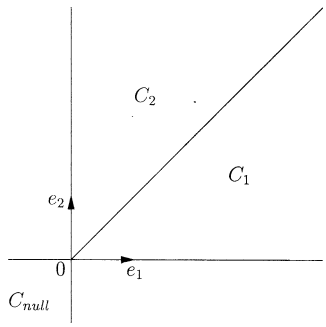

Fig. 4. The chambers.

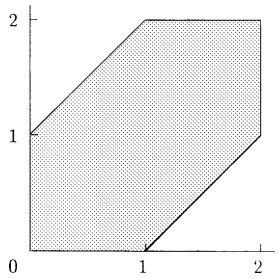

Fig. 5. The polytope $\square(\Phi)$.

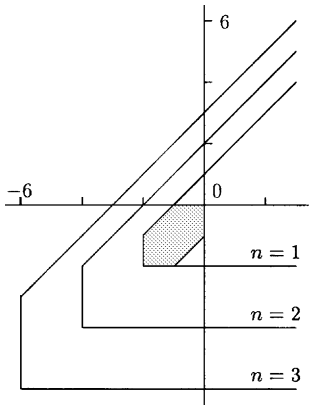

Fig. 6. The polyhedron $S_{1,n}$.

while

$$J\langle \mathfrak{c}_2, \operatorname{Tres} f\rangle_{\mathrm{vol}_{\Gamma^*}} = \operatorname*{Res}_{z_1=0}\operatorname*{Res}_{z_2=0}\big(f(z_1,z_2)\,\mathrm{d}z_1\,\mathrm{d}z_2\big).$$

We denote by Φ_n the system of $3n$ vectors where each linear form e_1^*, e_2^*, $e_1^*+e_2^*$ has multiplicity n.

The polytope $\square(\Phi)$ is the convex hull of the six points 0, e_1^*, e_2^*, $2e_1^*+e_2^*$, $2e_2^*+e_1^*$, $2e_1^*+2e_2^*$. The polytope $\square(\Phi_n)$ is the dilated convex polytope $n\square(\Phi)$.

The set $S_{1,n} = \mathfrak{c}_1 - \square(\Phi_n)$ is the interior of the polyhedron determined by the inequalities

$$a_2 \geqslant -2n, \qquad a_1 \geqslant -2n, \qquad a_1 - a_2 \geqslant -n.$$

The partition function $\iota_{\Phi_n}(\lambda)$ is given by a polynomial formula $\iota[\mathfrak{c}_1, \Phi_n](\lambda)$ when λ varies in the set $S_{1,n} \cap \mathbb{Z}^2$.

The set $S_{2,n} = \mathfrak{c}_2 - \square(\Phi_n)$ is the interior of the polyhedron determined by the inequalities

$$a_1 \geqslant -2n, \qquad a_2 \geqslant -2n, \qquad a_2 - a_1 \geqslant -n.$$

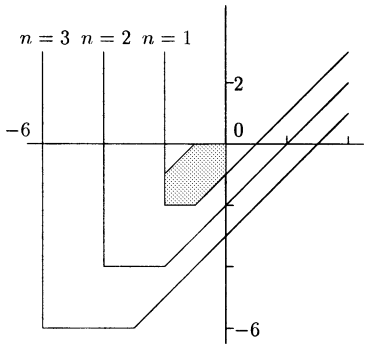

Fig. 7. The polyhedron $S_{2,n}$.

The partition function $\iota_{\Phi_n}(\lambda)$ is given by a polynomial function $\iota[\mathfrak{c}_2, \Phi_n](\lambda)$ when λ varies in the set $S_{2,n} \cap \mathbb{Z}^2$.

We see that the set $\mathfrak{c}^{\text{null}} \cap S_{1,n}$ contains the $(2n-1)$ half-lines $p_j + te_1^*$, where $t \geqslant 0$ and

$$p_j = \begin{cases} (1-n-j)e_1^* - je_2^*, & \text{if } 1 \leqslant j \leqslant n, \\ (1-2n)e_1^* - je_2^*, & \text{if } n \leqslant j \leqslant 2n-1. \end{cases} \tag{A.1}$$

The function $\iota[\mathfrak{c}_1, \Phi_n]$ vanishes on all the integral points contained in $\mathfrak{c}^{\text{null}} \cap S_{1,n}$, as the partition function ι_{Φ_n} is identically 0 on $\mathfrak{c}^{\text{null}}$. The set of integral points in these half-lines is Zariski dense in the affine line $a_2 + j = 0$, so that the polynomial function $\iota[\mathfrak{c}_1, \Phi_n]$ is divisible by $(a_2+1)(a_2+2)\cdots(a_2+(2n-1))$. Similarly the polynomial function $\iota[\mathfrak{c}_2, \Phi_n]$ is divisible by $(a_1+1)(a_1+2)\cdots(a_1+(2n-1))$. These divisibility properties are also clear from the Ehrhart reciprocity formula.

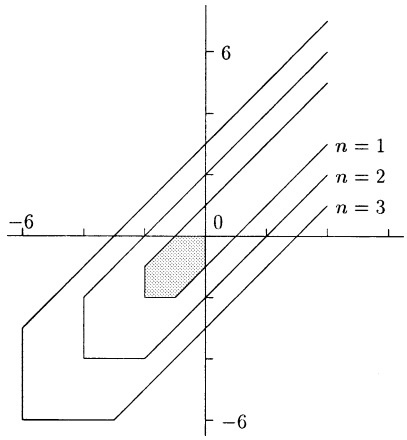

Fig. 8. The polyhedron $S_{1,n} \cap S_{2,n}$.

The set $S_{1,n} \cap S_{2,n}$ on which both formulae $\iota[\mathfrak{c}_1, \Phi_n]$ and $\iota[\mathfrak{c}_2, \Phi_n]$ agree contains the half lines $q_k + t(e_1^* + e_2^*)$ with $t \geqslant 0$, where

$$q_k = \begin{cases} (1-2n-j)e_1^* + (1-2n)e_2^*, & \text{if } 1-n \leqslant j \leqslant 0, \\ (1-2n)e_1^* + (1-2n+j)e_2^*, & \text{if } 0 \leqslant j \leqslant n-1. \end{cases}$$

By the same density argument, we see that the polynomial function $\iota[\mathfrak{c}_1, \Phi_n] - \iota[\mathfrak{c}_2, \Phi_n]$ is divisible by

$$\big(a_1 - a_2 - (n-1)\big) \cdots (a_1 - a_2 - 1)(a_1 - a_2)(a_1 - a_2 + 1) \cdots \big(a_1 - a_2 + (n-1)\big).$$

Below we give the formulas for the cases $n = 1, 2, 3$; the functions $\iota[\mathfrak{c}_1, \Phi_n]$ and $\iota[\mathfrak{c}_2, \Phi_n]$ can easily be computed from our formula, with some help from Maple. One can easily see that the appropriate functions vanish on the lines indicated above. To simplify our formulas we use binomial coefficients. Note that $\binom{a+m}{k}$, where we consider a to be the variable, vanishes at $a = -m, \ldots, k-m-1$.

Case $n = 1$.

$$\iota[\mathfrak{c}_1, \Phi_1] = (a_2 + 1), \qquad \iota[\mathfrak{c}_2, \Phi_1] = (a_1 + 1).$$

We also have

$$\iota[\mathfrak{c}_1, \Phi_1] - \iota[\mathfrak{c}_2, \Phi_2] = (a_2 - a_1),$$

which vanishes on the line $a_2 = a_1$.

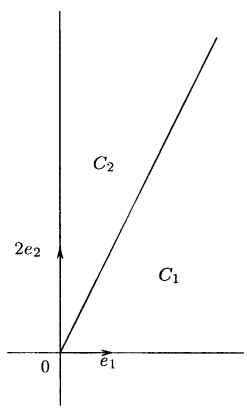

Fig. 9. The chambers.

Case $n = 2$.

$$\iota[\mathfrak{c}_1, \Phi_2] = \frac{1}{2}\binom{a_2+3}{3}(2a_1 - a_2 + 2), \qquad \iota[\mathfrak{c}_2, \Phi_2] = \frac{1}{2}\binom{a_1+3}{3}(2a_2 - a_1 + 2).$$

Again, we see that the function

$$\iota[\mathfrak{c}_1, \Phi_2] - \iota[\mathfrak{c}_2, \Phi_2] = \frac{1}{2}\binom{a_1 - a_2 + 1}{3}(a_1 + a_2 + 4)$$

vanishes on the lines $a_1 - a_2 = -1, 0, 1$.

The example of $n = 3$ is described in the introduction.

A.2. A nonunimodular example

Keeping the same vector space and lattice, we now consider a nonunimodular system

$$\Phi = \left\{e_1^*, e_2^*, e_1^* + 2e_2^*\right\}.$$

The closed cone $C(\Phi)$ generated by Φ is still the first quadrant $\{a_1 \geqslant 0,\ a_2 \geqslant 0\}$.

Again, there are three open chambers for the system Φ: The exterior of the cone $C(\Phi)$ denoted by $\mathfrak{c}^{\text{null}}$, the chamber $\mathfrak{c}^1 = \{a_2 > 0,\ 2a_1 > a_2\}$ and the chamber $\mathfrak{c}^2 = \{a_1 > 0,\ a_2 > 2a_1\}$.

The set $RG(\Phi, \mathfrak{c}_1, \Gamma)$ consists of the elements $\{(0,0), (0, \mathrm{i}\pi)\}$. The set $RG(\Phi, \mathfrak{c}_2, \Gamma)$ is reduced to the element $\{(0,0)\}$.

The polytope $\square(\Phi)$ is the convex hull of the six points 0, e_1^*, e_2^*, $2e_1^* + 2e_2^*$, $3e_2^* + e_1^*$, $2e_1^* + 3e_2^*$.

We consider the system Φ_n, where each of the three vectors e_1^*, e_2^*, and $e_1^* + 2e_2^*$ has multiplicity n.

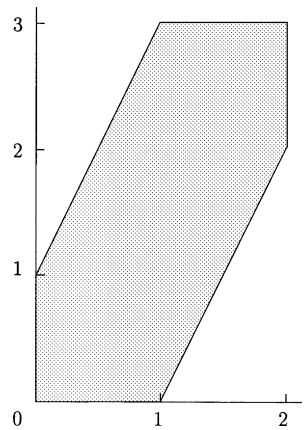

Fig. 10. The polytope $\square(\Phi)$.

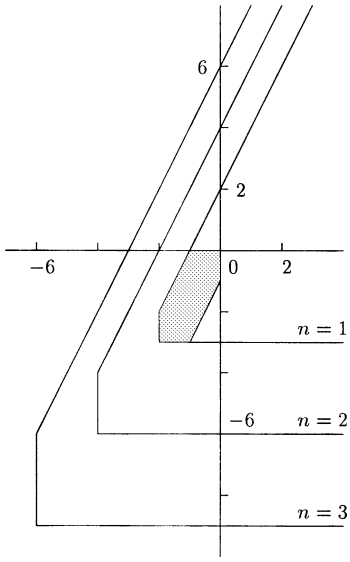

Fig. 11. The polyhedron $S_{1,n}$.

The set $S_{1,n} = \mathfrak{c}_1 - \square(\Phi_n)$ is the interior of the polyhedron determined by the inequalities

$$a_2 \geqslant -3n, \qquad a_1 \geqslant -2n, \qquad 2a_1 - a_2 \geqslant -2n.$$

The partition function $\iota_{\Phi_n}(\lambda)$ is given by a periodic-polynomial formula $\iota[\mathfrak{c}_1, \Phi_n](\lambda)$ when λ varies in the set $S_{1,n} \cap \mathbb{Z}^2$. By our results, the periodic-polynomial $\iota[\mathfrak{c}_1, \Phi_n]$ is of the form $P(a_1, a_2) + \exp(\mathrm{i}\pi a_2)Q(a_1, a_2)$ where $P(a_1, a_2)$ and $Q(a_1, a_2)$ are polynomials. We denote by $\iota[\mathfrak{c}_1, \Phi_n, \text{even}](a_1, a_2)$ the polynomial function $P(a_1, a_2) + Q(a_1, a_2)$ on $\mathbb{R}^2$, which is equal to $\iota[\mathfrak{c}_1, \Phi_n](a_1, a_2)$ when a_2 is an even integer, and by $\iota[\mathfrak{c}_1, \Phi_n, \text{odd}](a_1, a_2)$ the polynomial function $P(a_1, a_2) - Q(a_1, a_2)$ on $\mathbb{R}^2$, which is equal to $\iota[\mathfrak{c}_1, \Phi_n](a_1, a_2)$ when a_2 is an odd integer.

The set $S_{2,n} = \mathfrak{c}_2 - \square(\Phi_n)$ is the interior of the polyhedron determined by the inequalities

$$a_1 \geqslant -2n, \qquad a_2 \geqslant -3n, \qquad 2a_1 - a_2 \leqslant n.$$

The partition function $\iota_{\Phi_n}(\lambda)$ is given by a polynomial formula $\iota[\mathfrak{c}_2, \Phi_n](\lambda)$ when λ varies in the set $S_{2,n} \cap \mathbb{Z}^2$.

For the same reasons as before, the periodic-polynomial $\iota[\mathfrak{c}_1, \Phi_n]$ vanishes on the lines $a_2 = -1, -2, \ldots, -(3n-1)$, while the polynomial $\iota[\mathfrak{c}_2, \Phi_n]$ vanishes on the lines $a_1 = -1, -2, \ldots, -(2n-1)$; the function $\iota[\mathfrak{c}_1, \Phi_n] - \iota[\mathfrak{c}_2, \Phi_n]$ vanishes on the lines $(2a_1 - a_2 + k) = 0$ for $-(n-1) \leqslant k \leqslant (2n-1)$. Note that if k is even, then the a_2 coordinate of an integral point on the line $(2a_1 - a_2 + k) = 0$ is even, while if k is odd, then this coordinate is odd.

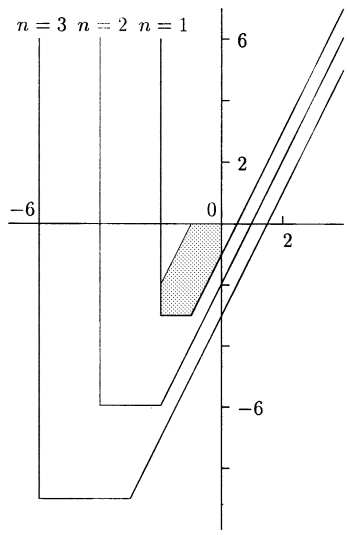

Fig. 12. The polyhedron $S_{2,n}$.

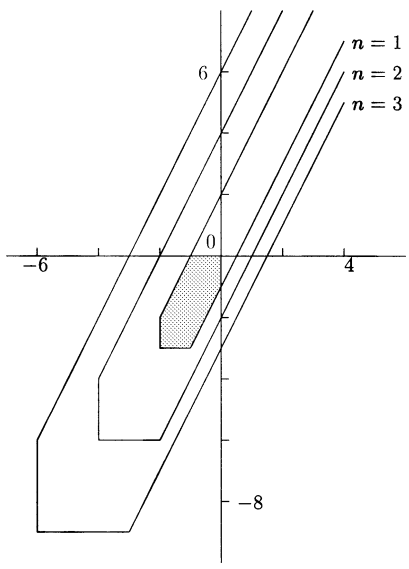

Fig. 13. The polyhedron $S_{1,n} \cap S_{2,n}$.

We verify these properties for $n = 1, 2, 3$.

Case $n = 1$.

$$\iota[\mathfrak{c}_1, \Phi_1] = \frac{a_2}{2} + \frac{3}{4} + \frac{e^{i\pi a_2}}{4},$$

hence

$$\iota[\mathfrak{c}_1, \text{even}] = \frac{1}{2}(a_2 + 2) \quad \text{and} \quad \iota[\mathfrak{c}_1, \text{odd}] = \frac{1}{2}(a_2 + 1).$$

Thus the function $\iota[\mathfrak{c}_1, \Phi_1]$ vanishes on the lines $a_2 = -1$, $a_2 = -2$ as stated.

In the other chamber, we have $\iota[\mathfrak{c}_2, \Phi_1] = (a_1 + 1)$. This function vanishes on the line $a_1 = -1$. Then

$$\iota[\mathfrak{c}_1, \Phi_1, \text{even}] - \iota[\mathfrak{c}_2, \Phi_1] = \frac{1}{2}(a_2 - 2a_1),$$

which vanishes when $2a_1 - a_2 = 0$. Also

$$\iota[\mathfrak{c}_1, \Phi_1, \text{odd}] - \iota[\mathfrak{c}_1, \Phi_1] = -\frac{1}{2}(2a_1 - a_2 + 1),$$

which vanishes when $2a_1 - a_2 + 1 = 0$.

Case $n = 2$. Here

$$\iota[\mathfrak{c}_1, \Phi_2, \text{even}] = \frac{1}{96}(a_2 + 2)(a_2 + 4)\big(4a_1a_2 - a_2^2 + 12a_1 + 2a_2 + 12\big)$$

and

$$\iota[\mathfrak{c}_1, \Phi_2, \text{odd}] = \frac{1}{96}(a_2 + 1)(a_2 + 3)(a_2 + 5)(4a_1 - a_2 + 5).$$

Thus the periodic-polynomial function $\iota[\mathfrak{c}_1, \Phi_2]$ vanishes on all the lines $a_2 = -1, -2, -3, -4, -5$.

In the other chamber

$$\iota[\mathfrak{c}_2, \Phi_2] = -\frac{1}{6}(a_1 + 1)(a_1 + 2)(a_1 + 3)(a_1 - a_2 - 1).$$

Thus the function $\iota[\mathfrak{c}_2, \Phi_2]$ vanishes on all the lines $a_2 = -1, -2, -3$.

Now we have the polynomial formulas

$$\iota[\mathfrak{c}_1, \Phi_2, \text{even}] - \iota[\mathfrak{c}_2, \Phi_2] = \frac{1}{96}(2a_1 - a_2)(2a_1 - a_2 + 2)\big(4a_1^2 - a_2^2 + 16a_1 - 6a_2 + 4\big)$$

and

$$\begin{aligned}\iota[\mathfrak{c}_1, \Phi_2, \text{odd}] - \iota[\mathfrak{c}_2, \Phi_2] \;=\; & \frac{1}{96}(2a_1 - a_2 - 1)(2a_1 - a_2 + 1) \\ & \times (2a_1 - a_2 + 3)(2a_1 + a_2 + 7),\end{aligned}$$

thus the function $\iota[\mathfrak{c}_2, \Phi_2] - \iota[\mathfrak{c}_1, \Phi_2]$ vanishes on all the lines $2a_1 - a_2 = -3, -2, -1, 0, 1$.

Case $n = 3$. Here we have

$$\begin{aligned}\iota[\mathfrak{c}_1, \Phi_3, \text{even}] = {} & \frac{1}{53760}(a_2+2)(a_2+4)(a_2+6)(a_2+8) \\ & \times \big(28a_1^2a_2 - 14a_1a_2^2 + 2a_2^3 + 70a_1^2 + 70a_1a_2 - 19a_2^2 \\ & \quad + 210a_1 + 44a_2 + 140\big)\end{aligned}$$

and

$$\begin{aligned}\iota[\mathfrak{c}_1, \Phi_3, \text{odd}] = {} & \frac{1}{53760}(a_2+1)(a_2+3)(a_2+5)(a_2+7) \\ & \times \big(28a_1^2a_2 - 14a_1a_2^2 + 2a_2^3 + 182a_1^2 + 14a_1a_2 - 11a_2^2 \\ & \quad + 630a_1 - 52a_2 + 481\big),\end{aligned}$$

thus the function $\iota[\mathfrak{c}_1, \Phi_3]$ vanishes for $a_2 = -1, -2, -3, \ldots, -8$.

In the other chamber

$$\begin{aligned}\iota[\mathfrak{c}_2, \Phi_3] = {} & \frac{1}{1680}(a_1+1)(a_1+2)(a_1+3)(a_1+4)(a_1+5) \\ & \times \big(8a_1^2 - 14a_1a_2 + 7a_2^2 - 15a_1 + 21a_2 + 14\big),\end{aligned}$$

thus the function $\iota[\mathfrak{c}_2, \Phi_3]$ vanishes for $a_1 = -1, -2, -3, -4, -5$.

Now the difference $\iota[\mathfrak{c}_1, \Phi_3, \text{even}] - \iota[\mathfrak{c}_2, \Phi_3]$ is given by

$$\begin{aligned}& -\frac{1}{53760}(2a_1 - a_2 - 2)(2a_1 - a_2)(2a_1 - a_2 + 2)(2a_1 - a_2 + 4) \\ & \quad \times \big(16a_1^3 + 4a_1^2a_2 - 2a_1a_2^2 - 2a_2^3 + 178a_1^2 + 18a_1a_2 - 29a_2^2 + 598a_1 - 68a_2 + 484\big),\end{aligned}$$

and $\iota[\mathfrak{c}_1, \Phi_3, \text{odd}] - \iota[\mathfrak{c}_2, \Phi_3]$ by

$$\begin{aligned}& -\frac{1}{53760}(2a_1 - a_2 - 1)(2a_1 - a_2 + 1)(2a_1 - a_2 + 3)(2a_1 - a_2 + 5) \\ & \quad \times \big(16a_1^3 + 4a_1^2a_2 - 2a_1a_2^2 - 2a_2^3 + 146a_1^2 - 6a_1a_2 - 37a_2^2 + 298a_1 - 212a_2 - 217\big).\end{aligned}$$

Thus the function $\iota[\mathfrak{c}_1, \Phi_3] - \iota[\mathfrak{c}_2, \Phi_3]$ vanishes on the lines

$$2a_1 - a_2 = -5, -4, -3, -2, -1, 0, 1, 2.$$

References

[1] T.V. Alekseevskaya, I.M. Gelfand, A.V. Zelevinsky, Arrangements of real hyperplanes and related partition functions, Dokl. Akad. Nauk. SSSR 297 (1987) 1289–1293.
[2] W. Baldoni-Silva, M. Vergne, Residues formulae for volumes and Ehrhart polynomials of convex polytopes, math.CO/0103097.
[3] A.I. Barvinok, Partition functions in optimization and computational problems, St. Petersburg Math. J. 4 (1993) 1–49.
[4] M. Brion, Points entiers dans les polyèdres convexes, Ann. Sci. École Norm. Sup. 21 (1988) 653–663.
[5] M. Brion, M. Vergne, Residue formulae, vector partition functions and lattice points in rational polytopes, J. Amer. Math. Soc. 10 (1997) 797–833.
[6] M. Brion, M. Vergne, Arrangement of hyperplanes I Rational functions and Jeffrey–Kirwan residue, Ann. Sci. École Norm. Sup. 32 (1999) 715–741.
[7] S.E. Cappell, J.L. Shaneson, Genera of algebraic varieties and counting of lattice points, Bull. Amer. Math. Soc. 30 (1994) 62–69.
[8] S.E. Cappell, J.L. Shaneson, Euler–MacLaurin expansions for lattices above dimension one, C. R. Acad. Sci. Paris Ser. A 321 (1995) 885–890.
[9] L. Comtet, Analyse Combinatoire, Presses Universitaires de France II, Paris, 1970.
[10] R. Diaz, S. Robins, The Ehrhart polynomial of a lattice polytope, Ann. Math. 145 (1997) 503–518.
[11] E. Ehrhart, Sur un problème de géométrie diophantienne linéaire I. II, J. Reine Angew. Math. 226 (1967) 1–29; J. Reine Angew. Math. 227 (1967) 25–49.
[12] E. Ehrhart, Polynômes Arithmétiques et Méthode des Polyèdres en Combinatoire, in: Internat. Ser. Numer. Math., Vol. 35, Birkhäuser, 1977.
[13] V. Guillemin, Riemann–Roch for toric orbifolds, J. Differential Geometry 45 (1997) 53–73.
[14] L.C. Jeffrey, F.C. Kirwan, Localization for non-Abelian group actions, Topology 34 (1995) 291–327.
[15] G. Khovanskii, A.V. Pukhlikov, A Riemann–Roch theorem for integrals and sums of quasipolynomials over virtual polytopes, St. Petersburg Math. J. 4 (1993) 789–812.
[16] P. McMullen, Valuations and Euler-type relations on certain classes of convex polytopes, Proc. London Math. Soc. 35 (1977) 113–135.
[17] P. McMullen, Lattice-invariant valuations on rational polytopes, Arch. Math. 31 (1978) 509–516.
[18] E. Meinrenken, R. Sjamaar, Singular reduction and quantization, Topology 38 (1999) 699–762.
[19] R. Stanley, Decompositions of rational convex polytopes, Ann. Discrete Math. 6 (1980) 333–342.
[20] B. Sturmfels, On vector partition functions, J. Combin. Theory Ser. A 71 (1995) 302–309.
[21] A. Szenes, A residue theorem for rational trigonometric sums and Verlinde's formula, math.CO/0109038.