Available online at www.sciencedirect.com

ScienceDirect

Procedia CIRP 41 (2016) 783 – 788

www.elsevier.com/locate/procedia

48th CIRP Conference on MANUFACTURING SYSTEMS - CIRP CMS 2015

"Multi-level energy demand optimizer system for machine tool controls"

Jan Schlechtendahl[a,*], Philipp Eberspächer[a], Philipp Schraml[b], Alexander Verl[a], Eberhard Abele[b]

[a]*Institute for Control Engineering of Machine Tools and Manufacturing Units (ISW), Seidenstraße 36, 70174 Stuttgart, Germany*
[b]*Institute of Production Management, Technology and Machine Tools (PTW), Otto-Berndt-Str. 2, 64287 Darmstadt, Germany*

* Corresponding author. Tel.: +49-711-685-82464; Fax: +49-711-685-72407; E-mail address: jan.schlechtendahl@isw.uni-stuttgart.de.

Abstract

The need to increase resource and energy efficiency for a sustainable production has led to saving potential analyses and afterwards saving strategies in a multitude of disciplines: product design, supply chain management, process chain design, production process development, energy-optimal machine or component control and even machine tool and component design. Each of those strategies resulted in numerous improvements, however, they still lack reciprocal consideration.
To overcome this deficit, a machine-independent energy control system to include any control- or operation-based energy optimizer will be introduced in this paper. It is based on real-time control information from the machine and software-based energy demand optimizers targeting the machining process, the machine tool components control as well as the overlaying production process. The control system itself ensures the correct cooperative operation of the three optimizer types, to enable the much needed reciprocal consideration of the optimizer's effects.

© 2015 The Authors. Published by Elsevier B.V. This is an open access article under the CC BY-NC-ND license (http://creativecommons.org/licenses/by-nc-nd/4.0/).
Peer-review under responsibility of the scientific committee of 48th CIRP Conference on MANUFACTURING SYSTEMS - CIRP CMS 2015

Keywords: Energy efficiency; Optimization; Machine Tool

1. Introduction

Machine tools consume a large part of energy in German industry [1]. Studies focusing on the energy efficiency of machine tools have revealed that a reduction is only possible through many individual measures [2]. According to a survey of the Institute for German Economy in Cologne, these measures can only be accomplished today if they can be realized cost-efficiently [3].

The paper describes an energy control system in detail, which reduces energy consumption through energy optimization during the operation of the machine. The first section of the paper displays, how information over the current energy and operating state of the machine tool and its components can be provided to the energy control system in a universal manner. This is followed by an approach of how manipulation of a machine tool is possible. The second section of this paper illustrates, how energy optimizers of single components or the whole machine tool can be connected to the machine in real-time. The section thereafter describes how energy optimizers can reduce the machine tool energy demand based on real-time information. The last section of the paper presents a case study based on a 5-axis machine tool, where two different energy optimizers operate cooperatively.

2. Information provision and machine tool manipulation

In order to enable information provision and machine tool manipulation by an energy control system, interfaces have to be present. Therefore, an automatable approach for describing these interfaces has been developed as an XML-based energy information description language (EIDL) [4]. EIDL provides information about the use of models, available machine control information and existing power measurement devices.

2.1. Information provision

Machine control information in this context is data or signal values from the machine control or mainly from its components. To provide this component information to an energy control system, the following description of an interface has to be present:

2212-8271 © 2015 The Authors. Published by Elsevier B.V. This is an open access article under the CC BY-NC-ND license (http://creativecommons.org/licenses/by-nc-nd/4.0/).
Peer-review under responsibility of the scientific committee of 48th CIRP Conference on MANUFACTURING SYSTEMS - CIRP CMS 2015
doi:10.1016/j.procir.2015.12.030

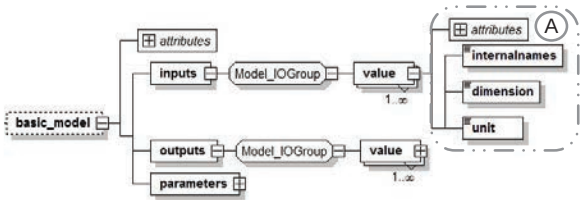

Fig. 1: Model interface inputs

1. Type of interface
2. Routing information depending on the interface type

Interfaces can be divided into two main groups – ‘models’ and ‘live values’. Each ‘live value’ interface has different communication module types (e.g. for Profinet, Sercos III or TCP/IP) lying beneath.

The routing information depends on the interface type. The ‘models’ type (e.g. matlab file), the path where the model is located and the inputs/outputs/parameters define the routing information of a model as shown in Fig. 1.

The routing information for a communication module defines the values necessary to access a communication module (e.g. IP address and port) and how – once connected to the component – the information necessary can be accessed and withdrawn (e.g. through a variable name).

2.2. Machine tool manipulation

Machine tool manipulation is only possible through a ‘live value’ interface. To differentiate between interfaces, where information can be accessed over, and interfaces that allow the manipulation of a machine tool, a grouping has been introduced in EIDL. Interfaces, which allow machine tool manipulation, are grouped beneath the subtype ‘adjusting lever’ in ‘live values’ as shown in Fig. 2.

In order to define an adjusting lever interface, the routing information needs to be derived. In Fig. 2 only ‘io_clamp’, ‘opc’, ‘sercos’ and ‘modbustcp’ are defined. If additional interfaces are required, EIDL can be extended with additional subtypes and the routing information according to the new interface.

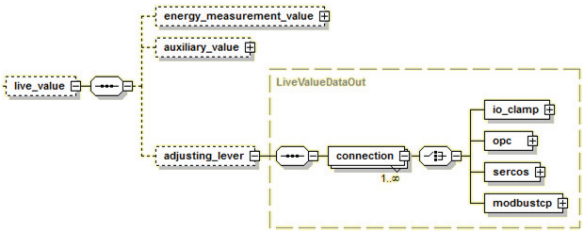

Fig. 2: Adjusting lever interface

3. Energy control system

As stated earlier, there exists a wide variety of approaches for reducing the energy consumption of machine tools. The optimal energy efficiency will only be reached when applying multiple harmonized approaches.

The first step towards energy consumption reduction was making the user aware of the dependencies of his actions (control inputs) on the power consumption [5].

As a next step, an energy control system has to be developed, which uses EIDL as input format, connects to the described interfaces and has the ability to execute energy optimizers. In Fig. 3 an architecture of such an energy control system is displayed. The architecture provides the relevant infrastructure for communication, execution, parametrization and supervision of the applied energy optimizers and is described in detail in the following subsections.

3.1. Execution of energy optimizer

An energy optimizer that is to be executed in the energy control system has to have a defined format. A defined format could be a web service or a library as a Dynamic Link Library (DLL) for windows. Every defined format has in common that multiple and predefined entrance points exist, which can be used by the energy control system to execute the energy optimizers.

In the research group ECOMATION, a Windows DLL was chosen together with the three entrance points (‘start’, ‘step’ and ‘end’). Entrance point ‘start’ is executed once, when the energy optimizer is loaded, entrance point ‘step’ is used every calculation step and entrance point ‘end’ is run when the optimizer should be stopped.

Further, every energy optimizer needs to be connected with defined inputs (e.g. an actual velocity of a drive) and then provides outputs (e.g. suggested energy-optimal velocity of a drive) by itself.

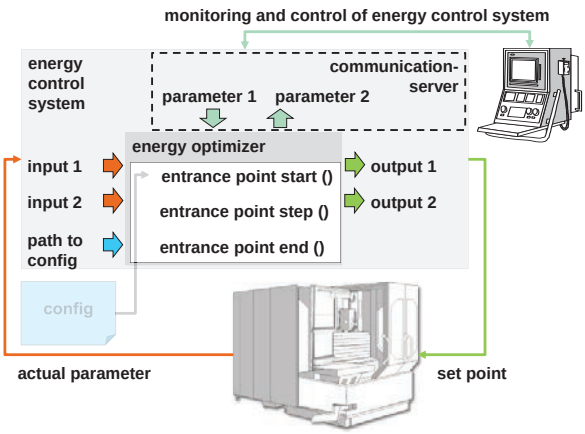

Fig. 3: Energy control system

For an energy optimization, the inputs and outputs of the energy optimizer need to be connected to actual inputs and outputs of the machine tool. To do so, the energy control system connects the inputs and outputs of the energy optimizer with the available interfaces for information provision and machine tool manipulation.

3.2. Monitoring and configuration of energy optimizers

Since energy optimizers might require a monitoring of the internal state or the provision of configuration parameters by a manufacturing execution system (MES) or a machine operator, an additional interface is needed. This interface needs to be accessible over a network for MES usage. A usable interface would be an IT middleware solution like OPC UA or SOAP. Using such a solution, a middleware communication server could provide the required parameters for monitoring and configuration as nodes (e.g. OPC UA nodes). These nodes can then be accessed either by a MES or by the machine operator over a human machine interface (HMI).

3.3. Execution of multiple energy optimizers

For running multiple energy optimizers strategies need to be developed how to design the topology of execution. This includes the general decision if the energy optimizers are executed in parallel or serial. Depending on this decision, the questions how conflicting outputs targeting the same machine output could be handled or what the best order for aligning energy optimizers should be.

In the research group ECOMATION, a serial execution of the energy optimizers was chosen as a first attempt. The energy optimizers were ordered depending on their decision speed. This means that slow running machine state energy optimizers are located at the beginning and fast running component optimizers are located at the end.

4. Energy optimization

To reduce the energy consumption of machine tools, three types of energy optimizers have been identified that can be executed in the machine-independent energy control system. The first type of optimizers targets the overall operation state, the second type optimizes the component and the third one the process. In the following, the operation state optimizer and component optimizer explained in detail.

4.1. Operation-state energy optimizer

A machine tool's operation is dividable into multiple operation-states. Following ISO's definition [6], these are:

- Off
- Standby with peripheral units off – Standby I
- Standby with peripheral units on – Standby II
- Ready for operation
- Warm up
- Processing

When considering the power consumption, the usage time of machine tools itself consists of two separate periods, first the processing time and second the standby time [7]. There exist multiple terms for the standby time, such as waiting period, idle, non-productive time, etc. In the following, it will be referred to as non-productive time, in order to distinguish between terms used for operation-states as well. Only a few research approaches exist for the energy-efficient operation during non-productive times. One focuses on factory automation systems [8] and others on machine tools [9,10]. The approaches either lack their proper demonstration on real factory equipment, e.g. only on a small lab test bed, or are specific to only one proprietary control manufacturer. In the research group ECOMATION, a generic operation-state energy optimizer has been developed [11]. The operation-state optimizer is only active during non-productive times; it does not manipulate the machine's operation during the operation-state 'processing'. The aim of the operation-state optimizer is to spend these non-productive periods with minimal power consumption. It is implemented as a pure optimizer, relying on the above-mentioned inputs and provides the relevant outputs to switch the machine operation-state according to the optimizer's calculation.

The optimizer is based on state-based consumption models that provide the optimizer with the necessary information about the machine's energetic behavior. This information is used as optimizer configuration and contains the available operation-states, for each state the mean electrical power consumption (see Fig. 4), the possible switches between the states and the time and energy needed for such a state.

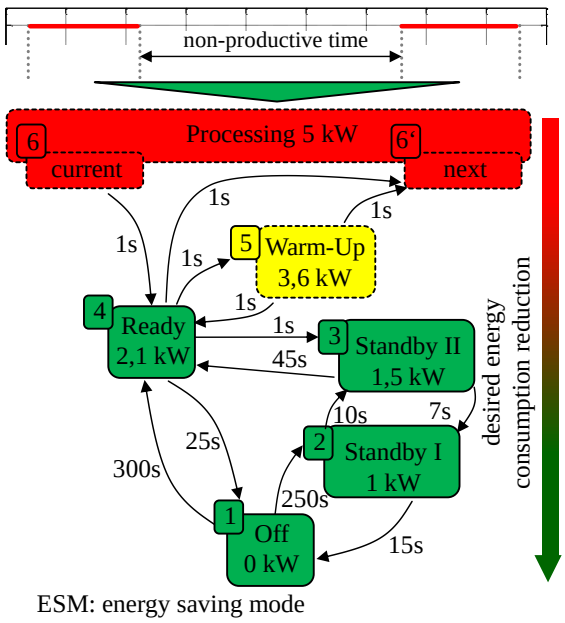

Fig. 4: Example for an optimizer configuration with state information [11]

The optimizer itself is based on graph-based optimization algorithms, such as Dijkstra's shortest path algorithm [12]. The idea can be explained by the energy consumption graph in Fig. 4. A potential production interruption is transmitted to the energy control system by the MES. This is represented by a specified time between 'current' and 'next' processing. Provided with this input, the optimizer calculates the optimal state trajectory through the consumption graph and returns to the operation-state 'processing' afterwards. One possible sequence is 'current', 'Ready' and back to 'next'. However another, more energy efficient sequence could be 'current', 'Ready', 'Standby II', 'Ready' and back to 'next'. These state trajectories contain not only the identified state sequence, but also the exact times for each state change.

Accordingly, the optimizer provides the energy control system and thus the machine control with state change commands at the correct time steps to cope with production or operation constraints, such as warm-up or spindle lubrication. These constraints have to be supplied to the optimizers through a configuration and will then be considered in the optimization cycle and therefore during each call of entrance point 'step' of the energy control system. In the second mentioned sequence, a constraint could be that after spending a machine specific time in the state 'Standby II', a warming up of the main spindle is necessary for accurate production. The exact durations are calculated by the optimizer. If this warming up is necessary, the optimizer blocks the direct state change from 'Ready' to 'next' and includes the state 'Warm-up' into the trajectory for the necessary period. This period however is taking into account when calculating the trajectory. This leads to cases in which the temperature constraint leads to trajectories that remain in the 'Ready' state to avoid having to warm up if the available time is not enough.

As a conclusion, the operation-state optimizer ensures that for each case, the energy optimal state trajectory is calculated.

4.2. Component-state energy optimizer

Due to the modular design of machine tools and the large number of different components and component manufacturers in terms of energy efficiency considerations, a non-optimal control of the entire machine tool may occur. In particular, function modules with autonomous control units (e.g. machine cooling) or unregulated devices (e.g. oil mist exhaust) have a great energy-saving potential due to a holistic control approach. So far, only a few approaches exist targeting this control-based field of research. E.g. within the research project NCplus a need-based control strategy for machine tools is developed. Using the actual part program for a dedicated work piece, e.g. realizing a demand-based control of the cooling-lubricant system. In addition, an advanced breaking system for feed drives is developed enabling the machine control to switch axes off during idle times. [13]. Heyers established an energy-efficient control of asynchronous motors through a load-dependent excitation current reduction, leading to reduced electric power losses. With a simulation model for estimating the actual stator temperature of an asynchronous main spindle, Heyers also realized a model-based control of a machine tool chiller system [14].

Within the research group ECOMATION a holistic component optimizer is developed. Based on a machine's structural model [4], the energy demand-relevant functional modules of a machine tool with respect to their optimization potential and the possibilities to interact are investigated and suitable optimization strategies are designed.

For the demonstrator machine tool (Exeron HSC 600) examined within the research group, the component state energy optimizing structure is displayed in Fig. 5. Input data for the optimizer are machine control information such as switching information as well as technology data (position, speed, etc.) of the dedicated functional modules. Output data can be optimized switching commands in addition to energy-optimal sets of parameters. An example for a simple component optimizer will be described in the following.

Within the actual delivery condition of the machine tool demonstrator, the oil mist exhaust is activated via an m-command in the NC code of the part program and it runs until deactivation via a different m-command.

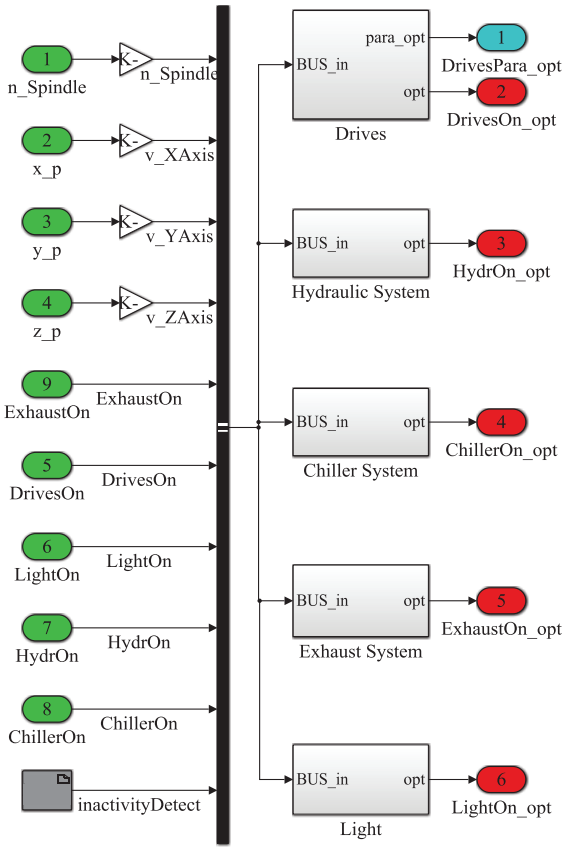

Fig. 5: Structure of the component-state energy optimizer

Alternatively, exhaust systems in machine tools with high-pressure coolant lubricant systems are often linked to the activity of the high pressure pump. With an average electrical power demand of around 400W and power peaks of about 2kW, the exhaust system contributes significantly to the energy demand of the demonstrator machine. In the first optimization stage, therefore, the operation of the exhaust system is linked to the rotational speed of the main spindle. Every time the rotational speed of the main spindle drops below a preset value for a certain amount of time, the exhaust system will be deactivated. This way a simple demand-based control is realized.

5. Case Study of a 5-axis milling machine

For demonstration of the developed concepts, the energy control system (refer to section 3) is applied and actively cooperating with a small MES as shown in Fig. 6. This MES provides information about the next work piece to produce. Further, the MES has knowledge about manufacturing breaks and scheduled service periods, which can be passed on to the energy control system. For testing purpose, the MES was configured to start the NC program on the Exeron HSC 600 machine directly and to pass break times on to the energy control system.

As optimizers, an operation-state optimizer and an optimizer for the exhaust system are used. The operation state optimizer is running within a one-second cycle time, whereas the exhaust system optimizer is executed in 500 ms. Both energy optimizers try to influence that state of the exhaust system to keep it shut off for as long as possible.

The operation state optimizer, which is first in sequence, tries to decide what is most energy-efficient based on the information passed down from the MES, whereas the component optimizers are deciding based on the current spindle speed and the elapsed time since the last activation period.

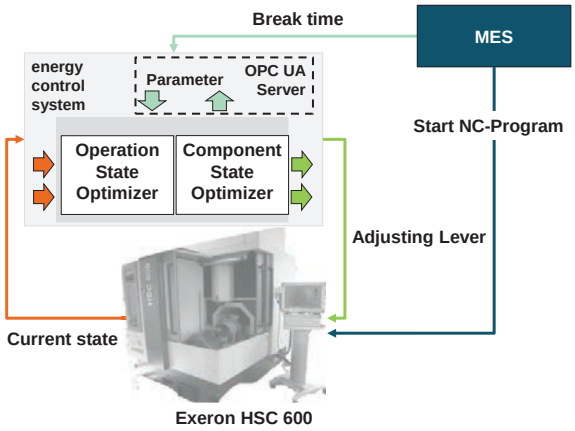

Fig. 6: Energy control system demonstrator

To evaluate the energy control system including the two optimizers, a previously recorded job shop scenario has been chosen. The job shop scenario was recorded in a real production, where the work piece was entered manually into the machine tool. Based on the record, an equivalent scenario with identical productive and non-productive times was created in the lab. Running the scenario with energy optimizers' leads to a 16% decrease of energy required.

6. Conclusion and Outlook

The paper describes an energy control system for machine tools, which includes the provision of information over the current energy and operating state of the machine tool and its components. Further, the paper illustrates how an energy control system is able to manipulate the machine tool to reduce the energy consumption. Then it is shown, how energy optimizers of single components or the whole machine tool can be connected to machines and reduce the energy demand based on real-time information. The paper concludes with a case study based on a 5-axis machine tool with different energy optimizers operating cooperatively.

The energy control system described in this paper is currently not able to handle opposed optimization suggestions. This could be the case if two optimizers output e.g. a different spindle velocity. At the current state of the energy control system, the different optimizers are connected in sequence leaving the last optimizer the overall decision about the optimization. This dilemma might be resolvable through an output prioritization block that allows introducing rules into the energy control system.

Acknowledgements

The authors are grateful to the German Research Foundation (DFG) for funding the presented work in project FOR1088 "ECOMATION".

References

[1] German Association of Energy and Water Industries. 2013 BDEW – Eletricity rate analysis May 2013: Household and Industry, [online] [Accessed: September 8th, 2014] Available at: http://www.bdew.de/internet.nsf/id/123176ABDD9ECE5DC1257AA20040E368/$file/13%2005%2027%20BDEW_Strompreisanalyse_Mai%202013.pdf.

[2] CECIMO. Concept Description for CECIMO's Self - Regulatory Initiative (SRI) for the Sector Specific Implementation of the Directive 2005/32/EC (EuP Directive) 2009. [online] [Acessed: 17. February 2014]. Available at: http://www.ecodesign-info.eu/documents/Machine_tools_VA_20Oct09.pdf

[3] Mahammadzadeh M. IW-Umweltexpertenpanel 2012. Umwelt- und Energiepolitik im Meinungsbild der Wirtschaft. Köln 2012.

[4] Schlechtendahl J, Eberspächer P, Schrems S, Sekler P, Verl A, Abele E. Automated Approach to Exchange Energy Information. In: Schuh G, Neugebauer R, Uhlmann E, editors. Future Trends in Production Engineering: Springer Berlin Heidelberg; 2013, pp. 47–54.

[5] Eberspächer P, Schraml P, Schlechtendahl J, Verl A, Abele E. A Model- and Signal-based Power Consumption Monitoring Concept for Energetic Optimization of Machine Tools [online]. 21st CIRP Conference on Life

Cycle Engineering, 15(0), 2014. 44-49. ISSN 2212-8271. Available at: doi:10.1016/j.procir.2014.06.020

[6] ISO/DIS 14955-1 2012. Machine tools — Environmental evaluation of machine tools - Part 1: Design methodology for energy-efficient machine tools, Genf, Switzerland; 2012.

[7] Kuhrke B, Rothenbücher S. Vermeiden von Stand-by-Zeiten verbessert die Energieeffizienz von Maschinen. Maschinenmarkt: MM (7). 2008 pp.32–34.

[8] Mechs S, Lamparter S, Müller JP. On evaluation of alternative switching strategies for energy-efficient operation of modular factory automation systems.In: IEEE 17th Conference on Emerging Technologies & Factory Automation, Krakow, Poland; 2012. pp. 1–8.

[9] Bittencourt JL. Selbstoptimierende und bedarfsgerechte Steuerungsstrategien für Werkzeugmaschinen zur Steigerung der Energieeffizienz, 1. Aufl., Aachen, Apprimus-Verl. ISBN 3863591070. 2013.

[10] Cannata A, Karnouskos S, Taisch M. Energy efficiency driven process analysis and optimization in discrete manufacturing.In: IECON 2009 - 35th Annual Conference of IEEE Industrial Electronics (IECON), Porto, Portugal, 2009. pp. 4449–4454.

[11] Eberspächer P, Verl A. Realizing Energy Reduction of Machine Tools Through a Control-integrated Consumption Graph-based Optimization Method. Procedia CIRP - Forty Sixth CIRP Conference on Manufacturing Systems 2013 Volume 7; 2013. pp. 640–645.

[12] Lunze J, 2010. Künstliche Intelligenz für Ingenieure, Oldenbourg Wissenschaftsverlag GmbH, München, Germany.

[13] Denkena B, Garber T (eds.). NCplus: Prozess- und wertschöpfungsorientiert gesteuerte Werkzeugmaschine ; Abschlussbericht. [Garbsen], Garbsen: PZH-Verl; TEWISS - Technik-und-Wissen-GmbH. 2013.

[14] Heyers C. Energieeffizienter Betrieb von Asynchron-Hauptspindelantrieben in Werkzeugmaschinen. 1st ed. Aachen: Apprimus-Verlag. 2013.