Available online at www.sciencedirect.com

ScienceDirect

Procedia CIRP 15 (2014) 461 – 466

www.elsevier.com/locate/procedia

21st CIRP Conference on Life Cycle Engineering

Supercritical Carbon Dioxide in Microelectronics Manufacturing: Marginal Cradle-to-Grave Emissions

Sarang D. Supekar[a], Steven J. Skerlos[b,*]

[a]Department of Mechanical Engineering, University of Michigan, 2190 GGBL, 2350 Hayward St, Ann Arbor, MI 48109-2125, USA
[b]Department of Mechanical Engineering, University of Michigan, 3001F EECS, 1301 Beal Ave, Ann Arbor, MI 48109-2122, USA

* Corresponding author. Tel.: +1-734-615-5253; Fax: +1-734-647-3170. *E-mail address:* skerlos@umich.edu

Abstract

This paper presents and discusses the marginal cradle-to-grave environmental impacts of using VLSI grade supercritical carbon dioxide ($scCO_2$) as a rinsing agent in place of ultrapure water (UPW) in semiconductor fabrication. Impacts are estimated using a consequential life cycle assessment framework for recovered CO_2. Upon factoring the cumulative yields of the CO_2 recovery and purification processes, compressor energy use (566 kJ/kg CO_2 output) together with refrigeration (540 kJ/kg CO_2 output) accounts for about 90% of total on-site electricity use. Upstream emissions from production of propylene carbonate co-solvent contribute to more than 50% of the life cycle impacts of $scCO_2$-based wafer cleaning. Overall impacts of $scCO_2$-wafer cleaning, particularly water and energy use, are found to be significantly lower than UPW.

© 2014 Published by Elsevier B.V. Open access under CC BY-NC-ND license.
Selection and peer-review under responsibility of the International Scientific Committee of the 21st CIRP Conference on Life Cycle Engineering in the person of the Conference Chair Prof. Terje K. Lien

Keywords: Sustainable Manuafcturing; Consequential Life Cycle Assessment; Supercritical Fluids; Semiconductor Fabrication

1. Introduction

The semiconductor devices industry including semiconductor materials, fabrication, and ancillary supply chains is worth nearly $400 billion annually. Increasing demand for consumer electronics in emerging economies, a trend towards integrating CMOS and MEMS systems into a growing number of applications, and advances in data storage and computing point to an annual growth rate of 4.5% to 7.6% over the next four years by some market estimates [1,2]. Although semiconductor devices have revolutionized almost every sector within the technosphere, their extremely low-entropy state necessitates high energy and resource consumption [3–5], and the chemicals used during their manufacture pose significant environmental concerns as well [6,7]. For instance, 1 g of a typical fabricated silicon device using about 41 MJ of energy, 105 L of water, and 280 g of toxic and/or corrosive chemicals [3]. Approximately 50% to 75% of the water consumption at a wafer fabrication facility is from the use of ultrapure water (UPW), which is used as a cleaning agent to wash off photoresist or any other residue that may build up on the wafer surface during the fabrication process. Purification of water to the stringent standards necessitated for this application requires a significant amount of energy, accounting for almost 10% of the fabrication facility's total energy consumption [8,9].

Besides high water and energy consumption, UPW poses functional challenges too [9]. Cleaning with UPW must be followed by a drying process immediately to prevent the formation of 'watermarks' on the wafer surface, which can create problems with etching as well growth of subsequent layers particularly for devices with small feature sizes. Water's high surface tension also makes drying small and intricate features more difficult. In some cases, the jet of water (high resistivity) impinging on a spinning wafer can induce an electrostatic charge on the wafer surface causing adhesion of particles post-cleaning. Thus, from an environmental as well as functional perspective, a

2212-8271 © 2014 Published by Elsevier B.V. Open access under CC BY-NC-ND license.
Selection and peer-review under responsibility of the International Scientific Committee of the 21st CIRP Conference on Life Cycle Engineering in the person of the Conference Chair Prof. Terje K. Lien
doi:10.1016/j.procir.2014.06.061

replacement for UPW would be useful. Researchers have explored several alternatives in the last decade. Out of these alternatives, supercritical carbon dioxide ($scCO_2$) has aroused particular interest. In its supercritical state ($T > T_{crit} = 304.25$ K; $P > Pcrit = 73.1$ bars), CO_2 has the fluidity of a gas, i.e. it has zero surface tension, which allows for wetting of complex features on the wafers. Additionally, CO_2 is acts as a nonpolar solvent for water-insoluble compounds often found in residues or substrates on semiconductor wafer surfaces, which means that surface cleaning can occur through physical mechanisms as well as chemical solubility of impurities.

Although several studies have examined the functional characteristics of $scCO_2$-based wafer cleaning, a comprehensive assessment of its environmental impacts as a substitute for UPW is yet to be performed. The focus of this paper is thus examine the life cycle environmental impacts of using $scCO_2$ as a substitute for UPW as a cleaning agent during the semiconductor wafer fabrication process. A consequential approach is adopted to estimate the marginal emissions from the production of VLSI grade CO_2 needed for use in $scCO_2$-based wafer cleaning.

2. Methods

Cradle-to-grave life cycle impacts of UPW and $scCO_2$ are compared for their function as cleaning agents. Functional unit for the life cycle assessment is chosen as one cleaning cycle used to clean one 300 mm silicon wafer (1/8" thick) in a cassette of 24 wafers. A monthly production capacity of 50,000 wafers is assumed. Process details for $scCO_2$ and UPW wafer cleaning along with their reference glows are discussed in sections 2.1 and 2.2 respectively. Data sources are listed in section 2.3. Impact assessment is done using the U.S. EPA TRACI 2 method.

2.1. Life Cycle Inventory of Recovered CO_2

CO_2 used in the wafer cleaning application is assumed to be recovered from an ethanol plant due to its high raw feed gas purity and partial pressure compared to CO_2 recovered from flue gases, as well as fewer trace impurities than other high purity sources such as ammonia and hydrogen plants. A consequential approach described in [10] is used for estimating the marginal environmental impacts of this recovered CO_2. The approach allocates impacts to CO_2 recovered as a byproduct or co-product on a causal basis. Thus, only impacts from processes that are affected on the margin due to the demand for recovered CO_2 are attributed to CO_2. The marginal processes for VLSI grade CO_2 used in semiconductor wafer cleaning (> 99.995% purity) are those involved in purification, dehydration, liquefaction, and transport of CO_2. Purification steps include the specific processes and materials needed to obtain purity beyond just industrial grade (> 99.5% purity) CO_2.

Figure 1 shows the process flow diagram for high purity recovered CO_2 developed based on [11–15]. A scrubber is used to remove water-soluble impurities such as nitrogen dioxide and alcohols, as well as particulates. Activated carbon

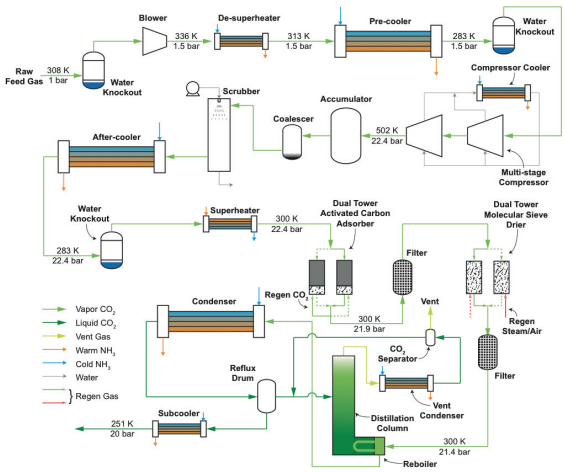

Fig. 1. Block diagram for recovery of VLSI grade CO_2 from an ethanol plant (see PDF for coloured version of image).

(AC) is used to remove trace quantities of sulphides, volatile organic compounds (VOCs), and other odorous compounds. A 13X molecular sieve (molsieve) is used to dehydrate the CO_2 to a dew point of 200 K and remove mercaptans. Both activated carbon filtration and molecular sieve drying occur in a dual tower process in which one tower is active while the other tower is being regenerated. The AC bed is regenerated using steam 673 K steam, dried using air heated to 366 K. Regeneration and drying of the molsieve beds is achieved using dry CO_2 gas at 473 K. Cycle times for each step in the AC filtration and molsieve drying operations are obtained from [15], and energy, steam, and compressed air consumption for each step are calculated by using specific heat or enthalpy of the respective process fluid being used at the operating temperature and pressure used in that step. Natural gas use is derived from steam consumption assuming 40% energy transfer efficiency in the burner. Natural gas fugitive emissions are assumed to be 0.5% based on [16].

The final step in the purification process is distillation, which removes the non-condensable trace gaseous impurities such as nitrogen and oxygen. This purified and compressed CO_2 at 20 bars pressure is then liquefied via refrigeration to a temperature of 251 K. Cooling and refrigeration requirements in the CO_2 recovery plant are provided by a closed loop ammonia-based refrigeration system. Energy consumption for the ammonia refrigeration system is obtained from [14]. Cooling water consumption is obtained by assuming a daily evaporative loss of 2.75% based on [16]. Overall, the production of 1 kg of VLSI grade CO_2 requires 1.25 MJ of electricity, 2.09 MJ of heat, 1.89 L of potable water, 0.198 kg of steam (at 1.5 bar and 673 K), 0.06 kg of natural gas, and 0.024 kg of compressed air.

The liquid CO_2 is then stored in tankers for transportation via heavy-duty trucks to the CO_2 end-user. Transportation emissions are allocated per wafer assuming that a 20,000 L capacity tanker delivers CO_2 to a wafer fabrication processing facility producing about 50,000 wafers per month at the delivery frequency necessitated by the CO_2 consumption rate at the facility. Emissions from transporting an empty tanker back to the CO_2 production facility are also attributed to CO_2.

This allocation method is chosen to represent the worst-case scenario for transportation emissions for recovered CO_2. In this paper, the wafer cleaning facility is assumed to be the University of Michigan Lurie Nanofabrication Laboratory in Ann Arbor, MI, USA, and the CO_2 is sourced from the nearest ethanol-byproduct CO_2 recovery plant located 80 km away in Riga, MI, USA. It should be noted that emissions associated with production and transportation of AC, molsieves, filters and all capital equipment are outside the system boundaries of this LCA.

During the use phase, liquid CO_2 at room temperature is compressed to about 310 bars and cooled to about 338 K to achieve supercritical conditions for required for wafer cleaning. In addition to $scCO_2$, propylene carbonate (PCO3) is used as a co-solvent in a 15% v/v ratio with $scCO_2$. Emissions from PCO3 production are obtained by creating a model of its production process from propylene oxide and carbon dioxide in SimaPro 7.3.3 [17]. Assuming stoichiometric conditions and a process yield of 90%, 1.95 kg of propylene oxide is assumed to react with 2.57 kg of supercritical carbon dioxide in an autoclave for 12 hours under constant stirring [18]. The PCO3 is assumed to be sourced from a supplier in Rochester, NY, USA.

The $scCO_2$ wafer cleaning process and data on its energy use, CO_2 consumption, and PCO3 consumption are based on [19]. According to [19], wafer cleaning operation after any fabrication step involves the following steps: (a) $scCO_2$ system start-up, (b) purging of the cleaning system, (c) cleaning operation, (d) post-cleaning separation of impurities and co-solvent from $scCO_2$ via throttling, and (e) flushing of system with pure CO_2. This sequence of steps is repeated for every cleaning step during the wafer fabrication process. It is assumed that during the process of separating the impurities from CO_2, all the CO_2 is fully recovered, and all the co-solvent is lost. CO_2 is lost only during the start-up and purging steps, and thus each cleaning cycle requires 1.02 kg of CO_2 and 0.27 kg of PCO3. Reference flows for the $scCO_2$ cleaning system are calculated based on these use phase consumption data for CO_2 and PCO3.

2.2. Life Cycle Inventory of Ultrapure Water

Production of UPW involves on-site purification of potable municipal water at the wafer fabrication facility involving multi-media filtration, reverse osmosis (RO), vacuum degasification, mixed-bed demineralization, UV sterilization, and ultrafiltration of the municipal water [8]. Due to the low yield of the RO process, energy intensive regeneration steps, high wattage UV lamps, and high water pressure needed across the ultrafiltration membranes (about 20 bar), the energy consumption of UPW is about 17.5 kJ/kg, which is over five times the specific energy consumption of municipal water. For every kg of UPW produced, 1.5 kg of municipal water is used since a large portion of the municipal water is lost during the RO process [8]. Upstream emissions from energy use at the municipal water plant, and downstream emissions from energy use at the wastewater treatment plant are included in the life cycle inventory. Life cycle impacts of consumables such as filters, resins, and acids are outside the system boundaries. Figure 2 shows the system boundaries used for the life cycle assessment (only one wafer cleaning option between $scCO_2$ + PCO3 and UPW is assumed to be used at the facility).

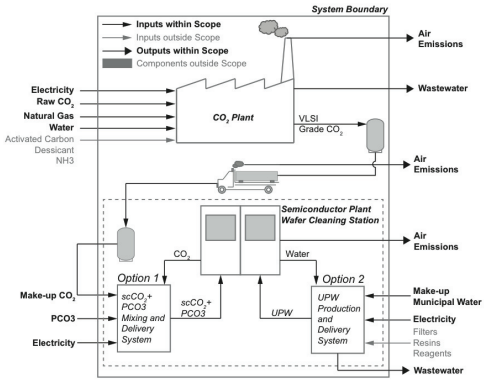

Fig. 2. System boundaries used for this life cycle assessment.

2.3. Data Sources

Energy use emissions are estimated using the U.S. average energy-mix data from the Ecoinvent database v2.2 [20]. Emissions from natural gas combustion are obtained from EPA [21]. Transportation emissions for heavy-duty truck operation are obtained from the U.S. LCI database [22]. Extraction and processing emissions for natural gas from shale reserves and low-sulfur diesel are obtained from the U.S. GREET model [23]. Emissions from municipal potable water treatment are obtained from [24], and wastewater treatment energy use data are obtained from [25]. Upstream emissions from anhydrous ammonia use to make up the fugitive losses in the refrigeration unit of the CO_2 recovery plant are obtained from [11].

3. Results and Discussion

3.1. Production Impacts of VLSI grade CO_2

Recovery, purification, and liquefaction of 1 kg of VLSI grade CO_2 from an ethanol plant requires about 5.5 MJ of energy, 13.1 liters of water, and leads to a global warming potential (GWP) of 499 g CO_2 eq. Table 1 lists TRACI impact categories and resource consumption metrics examined in this study. The impacts shown in Table 1 are further broken down by major source in Fig. 3.

Indirect emissions from electricity use at the CO_2 recovery plant account for the majority of impacts in almost all the categories examined. On-site natural gas combustion for generating steam, and heating air and dry CO_2 during regeneration/drying of AC and molsieve beds however, accounts for about 50% of the total (direct + indirect) energy use. CO_2 from natural gas combustion together with fugitive losses of natural gas contribute to 35% of GWP. Only about 10% of the total water consumption occurs from on-site use for cooling and steam generation.

Table 1. Production impacts of 1 kg of CO_2 recovered as a byproduct of ethanol production and purified to VLSI grade.

Impact Category	Abbrev.	Value	Units
Global warming potential	GWP	499.02	g CO_2 eq.
Ozone depletion potential	OZDP	42.32	ng CFC-11 eq.
Smog potential	SMOG	14.70	g O3 eq.
Acidification potential	ACIDP	175.6	mmol H^+ eq.
Eutrophication potential	EUTP	1.03	g N eq.
Respiratory effects	RESP	0.55	g PM10 eq.
Ecotoxicity	ECOTX	0.48	CTUe
Energy use	ENER	5.51	MJ
Water use	WATER	13.1	Liters

Non-combustion contributions to on-site impacts (emissions and energy/water use at the recovery plant) of CO_2 recovery include natural gas fugitive emissions contributing to GWP, once-through scrubbing water contributing to water use, and fugitive ammonia emissions contributing to acidification and eutrophication potential. It should be noted that emission of impurities such as sulfides, alcohols, and ketones that are present in the vent gas of the recovered CO_2 plant are not attributed to the recovered CO_2. This is because these impurities source from feedstock and chemicals used to produce ethanol, and would be emitted to the atmosphere even in the absence of a CO_2 recovery plant. Furthermore, the demand for recovered CO_2 is unlikely to affect the demand for ethanol, and thus it is unlikely that larger quantities of ethanol and thus higher emissions of impurities will be produced due to demand for recovered CO_2.

Per kg of CO_2 processed in each step, purification steps account for about 60% of the total energy consumption of recovered CO_2. However, when the process yield of AC adsorption, loss of dry CO_2 for molsieve bed regeneration during drying, and reboiler duty for CO_2 distillation is taken into account, only about 52% of the CO_2 feed gas is obtained as the output of the entire recovery and purification process. Upon factoring the cumulative yields of each step in the recovery and purification process, the compressor energy use changes from 294 kJ/kg CO_2 to 566 kJ/kg CO_2 output, and together with refrigeration (540 kJ/kg CO_2 output) accounts for about 90% of total on-site electricity use and 30% of total on-site energy use. The purification steps thus have a profound impact, both directly and indirectly, on the total energy consumption and GWP of recovered CO_2. By

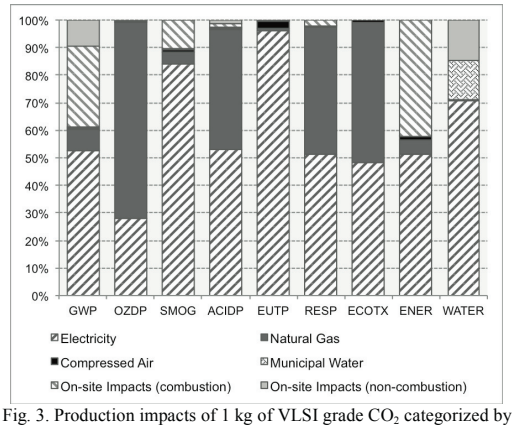

Fig. 3. Production impacts of 1 kg of VLSI grade CO_2 categorized by source.

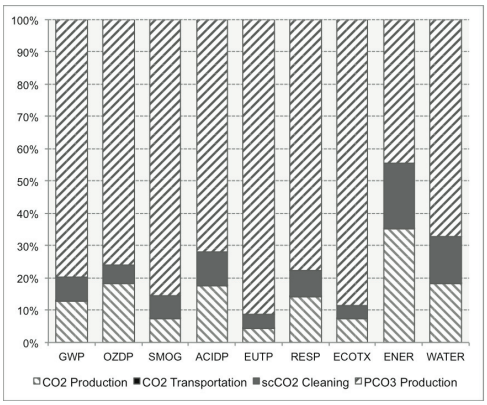

Fig. 4. Life cycle impacts of VLSI grade CO_2 with PCO3 co-solvent to clean one semiconductor wafer categorized by life cycle phase.

comparison, industrial grade CO_2 (> 99.5% purity) requires just 1.8 MJ of on-site energy use per kg of CO_2 output, which is approximately half of the on-site energy use for VLSI grade CO_2.

3.2. CO_2 Transportation and Use Phase Impacts

Assuming a cassette capacity of 24 wafers, cleaning of one wafer over one cleaning cycle using $scCO_2$-PCO3 solvent mixture requires 41.7 g of CO_2 and 11.3 g of PCO3 along with 51.2 kJ of electricity. Based on this CO_2 usage per wafer, CO_2 transportation emissions per wafer are calculated. Combining the transportation and use phase inventories with the production phase inventory, cradle-to-grave impacts of using $scCO_2$ for semiconductor wafer cleaning are calculated and shown in Table 2. A breakdown of these impacts by life cycle stage is illustrated in Fig. 4.

Based on the results, it can be observed that upstream processes involved in the production of PCO3 are the most significant contributors to the life cycle impacts of $scCO_2$-based semiconductor wafer cleaning. Propylene oxide, from which PCO3 is synthesized by reaction with liquid carbon dioxide in a pressurized heated vessel, has a large embodied energy due to its use of sodium hydroxide and liquid chlorine which are both highly energy intensive chemicals to produce.

CO_2 transportation emissions per wafer cleaned are found to be negligible due to low the relatively low amount of CO_2 lost per cleaning cycle. Use phase emissions associated with CO_2 alone (i.e. without including PCO3) in every impact category are found to be lower than production phase emissions. Most of the use phase emissions are from

Table 2. Cradle-to-grave impacts of using VLSI grade CO_2 recovered as a byproduct of ethanol production for semiconductor wafer cleaning.

Impact Category	Abbrev.	Value	Units (per wafer)
Global warming potential	GWP	143.32	g CO_2 eq.
Ozone depletion potential	OZDP	8.45	ng CFC-11 eq.
Smog potential	SMOG	7.26	g O3 eq.
Acidification potential	ACIDP	36.61	mmol H^+ eq.
Eutrophication potential	EUTP	0.90	g N eq.
Respiratory effects	RESP	0.14	g PM10 eq.
Ecotoxicity	ECOTX	0.23	CTUe
Energy use	ENER	0.57	MJ
Water use	WATER	2.61	Liters

electricity use by the CO_2 compressor, which is required to compress CO_2 to pressures between 60 bars and 310 bars during the various steps involved in a wafer cleaning cycle. In fact, electricity use during use phase is about 1.39 MJ/kg of CO_2, which is slightly higher than the value of 1.25 MJ/kg CO_2 output calculated for the production phase electricity use.

3.3. Ultrapure Water Impacts

A typical semiconductor wafer fabrication facility uses 5040 liters of UPW, and 198 MJ of electricity per wafer [8]. Furthermore, there are about 130 steps in the fabrication of a wafer that require surface cleaning [19]. Thus, the direct energy and water use per wafer in one cleaning step is 1.52 MJ and 87.2 liters respectively.

3.4. Comparison of $scCO_2$ and Ultrapure Water

Assuming that the cleaning performance provided by $scCO_2$ and UPW under the operating conditions assumed in this study is comparable, the life cycle impacts of $scCO_2$ + PCO3 co-solvent are significantly lower than those of UPW in every impact category examined. Figure 5 shows life cycle impacts of $scCO_2$ + propylene solvent normalized to UPW impacts. Water consumption of $scCO_2$ + PCO3 is only about 2.5% of UPW's water consumption which is 101 liters. Ecotoxicity of $scCO_2$ + PCO3 as a fraction of UPW's impact is higher than other impact categories due the high upstream coal-based electricity use in production of PCO3. Additionally, PCO3 itself has an ecotoxicity of about 5.1 CTUe (equivalent to 17.7 g of 2,4-D).

A co-solvent with $scCO_2$ is essential to reduce the bond between photoresist and the wafer surface to facilitate dissolution of the photoresist material into $scCO_2$. Although PCO3 has relatively lower toxicity than other co-solvents such as methylene chloride and methyl chloroform, its contribution to the overall impacts of $scCO_2$-based wafer cleaning is quite significant. One way to reduce this impact is to use a lower concentration of PCO3 in the $scCO_2$ cleaning solution. For instance, [26] used 5% by volume of PCO3 in $scCO_2$ applied in a pulsed manner similar to the one assumed in [19] which is used to characterize the use phase in this paper. By using a 5% PCO3 solution, life cycle impacts of the $scCO_2$ + PCO3 cleaning solution can be within 25% of UPW's life cycle impacts in every impact category examined. Alternate co-solvents such as acetic acid could also be explored.

Table 3. Values of parameters used for estimating bounds on life cycle impacts of $scCO_2$ + propylene carbonate cleaning solution.

Parameter	Nominal Value	Lower Bound	Upper Bound
Use Phase			
Number of wafers per cassette	24	12	24
PCO3 concentration	15%	5%	15%
Total number of cleaning steps	130	117	143
Flow rate of $scCO_2$ (L/s)	6	6	8
Start-up and purge cycle time (s)	5	5	10
CO_2 Production Phase			
Feed gas impurities (w/w)	3%	1%	5%
Regeneration steam boiler thermal efficiency	90%	80%	95%
Transportation distance (km)	83	83	391

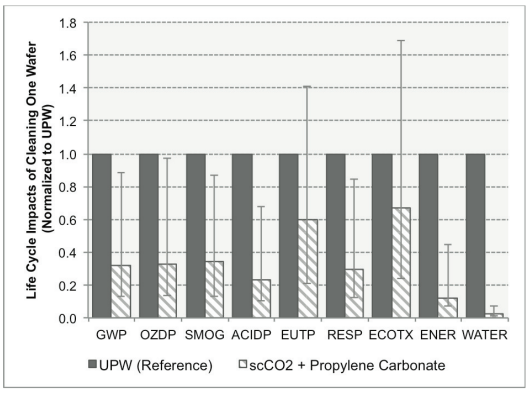

Fig. 5. Life cycle impacts of $scCO_2$ with PCO3 co-solvent relative to impacts of UPW.

3.5. Uncertainty and Sensitivity Analysis

A preliminary uncertainty and sensitivity (sensitivity defined as % change in output per unit % change in input) analysis on $scCO_2$ + PCO3 and UPW use phase operating parameters reveals that energy use as well as impact categories such as GWP, SMOG, ACIDP, EUTP, ECOTX, and RESP that are associated with energy use are highly sensitive to the number of wafers processed per cassette (sensitivity > 2.0 for all categories), and PCO3 concentration (sensitivity > 0.7 for all categories). Impacts are found to be weakly sensitive to flow rate of CO_2 (sensitivity between 0.04 to 0.13 for different categories), thermal efficiency of regeneration steam boiler in the CO_2 recovery process (sensitivity between 0.07 to 0.3 for different categories), and start-up/purge cycle time (sensitivity between 0.1 to 0.6 for different categories). Uncertainty bounds on the relative impact of $scCO_2$ + PCO3 cleaning solution against UPW shown in Fig. 5 are estimated by running the LCA model with the parameters shown in Table 3. The uncertainty analysis indicates that $scCO_2$ + PCO3 shows a reduction in most impact categories even in the worst-case scenario assumed in this study. Although $scCO_2$ + PCO3 shows higher values for EUTP and ECOTX in the worst-case scenario primarily due to the lower number of wafers per cassette, it is likely that a commercial semiconductor manufacturer will try to maximize the number of wafers per cassette is quite low for cost reasons. Thus, the overall impacts of $scCO_2$ + PCO3 are more likely to be around the nominal value shown in Fig. 5.

Transportation distance has a marginal effect on the life cycle emissions of $scCO_2$ cleaning solution. If the VLSI grade CO_2 is assumed to be sourced from the ethanol CO_2 recovery plant in Lawrenceburg, IN, USA located 391 km away from Ann Arbor, a slight increase in SMOG and RESP is observed due to increased emissions of NOx and particulates from the diesel truck. However, the contribution of transporation emissions to total life cycle emissions in these impact categories still remains less than 0.5%.

The loss of CO_2 and thus CO_2 consumption rate per cleaning cycle is determined by the duration of the start-up and purging cycles. While these times are assumed to be about 5 s in this study based on [19], it is possible that higher cycle times or larger CO_2 flow rates can be employed during these steps. A ten-fold increase in CO_2 consumption due to either an increase in cycle time, flow rate, or a combination of both will still result in lower life cycle impacts than UPW in all impact categories examined under the nominal operating conditions. Under this ten-fold CO_2 consumption increase scenario, more than 40% of life cycle impacts in all categories are from the production of VLSI grade CO_2.

4. Conclusions

This paper presents a process-based consequential life cycle inventory of VLSI grade CO_2 used together with propylene carbonate as a cleaning agent during semiconductor wafer fabrication processes. The life cycle impacts of supercritical CO_2-based wafer cleaning is compared with those of ultrapure water. It is found that $scCO_2$-based cleaning system has a lower life cycle impact than UPW under the impact categories examined in the study. Impacts of recovered CO_2 largely come from energy intensive and low yield purification steps that are necessary to remove trance impurities and water vapor to achieve greater than 99.998% CO_2 purity as per the VLSI grade. However, the majority of life cycle impacts of $scCO_2$-based cleaning systems are primarily from PCO3 (co-solvent) use.

Semiconductor manufacturers aim to maximize throughput without affecting process yield as indicated by readily available commercial wafer cassettes with capacities of 24 wafers or higher as assumed in this study. Furthermore, the combined mechanical and solvent-based cleaning action of $scCO_2$ + PCO3 means that it can likely achieve effective cleaning at flow rates of about 6-8 L/min as assumed in this study. Thus, using the consequential approach described in [10], $scCO_2$-based cleaning systems can lead to a net reduction in environmental emissions, energy use, and as much as 90% reduction in water use. The results from this study thus warrant further development of $scCO_2$-based technology to replace ultrapure water in semiconductor wafer cleaning applications.

Acknowledgements

The authors thank Mr. Sam Rushing from Advanced Cryogenics for his valuable inputs on common practices in operation of industrial CO_2 recovery plants. This paper is based on work supported by the National Science Foundation award CBET-1235688. Any opinions, findings, and conclusions or recommendations expressed in this material are those of the authors and do not necessarily reflect the views of the National Science Foundation.

References

[1] Global Semiconductor Market Outlook to 2017. Yahoo! Financ. [accessed 2013 Nov 25]. Available from: http://finance.yahoo.com/news/global-semiconductor-market-outlook-2017-162800646.html

[2] KPMG Global Semiconductor Survey. [accessed 2013 Nov 25]. Available from: https://www.kpmg.com/US/en/IssuesAndInsights/ArticlesPublications/Documents/kpmg-global-semiconductor-survey-optimistic-2013.pdf

[3] Krishnan N, Boyd S, Somani A, Raoux S, Clark D, Dornfeld D. A hybrid life cycle inventory of nano-scale semiconductor manufacturing. Environ. Sci. Technol. 2008;42:3069–75.

[4] Krishnan N, Williams ED, Boyd SB. Case studies in energy use to realize ultra-high purities in semiconductor manufacturing. 2008 IEEE Int. Symp. Electron. Environ. IEEE; 2008. p. 1–6.

[5] Boyd S. Life-Cycle Assessment of Semiconductors. Springer; 2011.

[6] Tsai W-T, Chen H-P, Hsien W-Y. A review of uses, environmental hazards and recovery/recycle technologies of perfluorocarbons (PFCs) emissions from the semiconductor manufacturing processes. J. Loss Prev. Process Ind. 2002;15:65–75.

[7] Lin AY, Panchangam SC, Lo C. The impact of semiconductor , electronics and optoelectronic industries on downstream perfluorinated chemical contamination in Taiwanese rivers. Environ. Pollut. Elsevier Ltd; 2009;157:1365–72.

[8] Mendicino L, Mccormack K, Gibson S, Covington J. Energy conservation through water usage reduction in the semiconductor industry. 1998;131–40.

[9] Hattori T. Ultrapure Water-Related Problems and Waterless Cleaning Challenges. 2011. p. 371–6.

[10] Supekar SD, Skerlos SJ. Market Driven Emissions Associated with Supplying Recovered Carbon Dioxide to Sustainable Manufacturing Applications. In: Seliger G, editor. Proc. 11th Glob. Conf. Sustain. Manuf. - Innov. Solut.. Berlin: Universitätsverlag der TU Berlin; 2013. p. 330–6.

[11] Overcash M, Li Y, Griffing E, Rice G. A life cycle inventory of carbon dioxide as a solvent and additive for industry and in products. 2007;1038:1023–38.

[12] Wittemann CO2 Recovery System - Distillery Fermentation. [accessed 2013 Nov 25]. Available from: http://www.pureco2nfidence.com/launch/images/downloads/literature/distillery/distillery_recovery_literature.pdf

[13] Rushing S. Personal Communication. 2013.

[14] Häring H-W, editor. Industrial Gases Processing. 1st ed. Munich: Wiley-VCH; 2008.

[15] Kohl AL, Nielson R. Gas Purification. 5th ed. Houston: Gulf Professional Publishing; 1997.

[16] Jiménez-González C, Kim S, Overcash MR. Methodology for developing gate-to-gate Life cycle inventory information. Int. J. Life Cycle Assess. 2000;5:153–9.

[17] SimaPro v.7.3.3. Amersfoort, The Netherlands: PRé Consultants; 2012.

[18] Du Y, Cai F, Kong D-L, He L-N. Organic solvent-free process for the synthesis of propylene carbonate from supercritical carbon dioxide and propylene oxide catalyzed by insoluble ion exchange resins. Green Chem. 2005;7:518.

[19] Blowers P, Titus M. Use of life-cycle inventory as a screening tool for environmental performance: Supercritical carbon dioxide in the semiconductor industry. Environ. Prog. 2004;23:284–90.

[20] Ecoinvent Database v2.2. Switzerland: Swiss Centre for Life Cycle Inventories; 2010.

[21] U.S. EPA, Natural Gas Combustion Emission Factors [Internet]. 1998 [accessed 2013 Nov 25]. Available from: http://www.epa.gov/ttnchie1/ap42/ch01/final/c01s04.pdf

[22] U.S. Life Cycle Inventory Database [Internet]. National Renewable Energy Laboratory; 2012 [accessed 2013 Nov 25]. Available from: https://www.lcacommons.gov/nrel/search

[23] The Greenhouse Gases, Regulated Emissions, and Energy Use in Transportation (GREET) Model. Chicago: Argonne National Laboratory; 2012.

[24] Clarens AF, Zimmerman JB, Keoleian G a, Hayes KF, Skerlos SJ. Comparison of life cycle emissions and energy consumption for environmentally adapted metalworking fluid systems. Environ. Sci. Technol. 2008;42:8534–40.

[25] Tripathi M. Life Cycle Energy and Emissions for Municipal Water and Wastewater Services: Case-Studies of Treatment plants in the U.S. University of Michigan; 2007.

[26] Rubin JB, Davenhall LB, Barton J, Taylor CMV, Tiefert K. A comparison of chilled DI water/ozone and CO2-based supercritical fluids as replacements for photoresist-stripping solvents. Twenty Third IEEE/CPMT Int. Electron. Manuf. Technol. Symp. (Cat. No.98CH36205). IEEE; 1998. p. 308–14.