View metadata, citation and similar papers at core.ac.uk
brought to you by CORE
provided by Elsevier - Publisher Connector

Available online at www.sciencedirect.com
ScienceDirect
Procedia Computer Science 52 (2015) 780 – 787
Procedia Computer Science

The 5th International Conference on Sustainable Energy Information Technology (SEIT 2015)

A review of optimal control techniques applied to the energy management and control of microgrids

Luis I. Minchala-Avila[a,*], Luis E. Garza-Castañón[b], Adriana Vargas-Martínez[b], Youmin Zhang[c]

[a] *Universidad de Cuenca, Av. 12 de Abril y Agustín Cueva, 0101168, Cuenca AZ, Ecuador*
[b] *Instituto Tecnológico y de Estudios Superiores de Monterrey, Eugenio Garza Sada 2501, Monterrey NL, Mexico*
[c] *Concordia University, 1455 de Maisonneuve Blvd., Montreal, Quebec H3G 1M8, Canada*

Abstract

This paper presents a literature review on optimal control techniques for energy management and control of microgrids. A classification of references linked with the design and development of optimal energy management systems (EMS) is made, considering mainly the objective functions to be solved and also the optimization techniques used for solving optimal control problems (OCPs) related with reliable operations of microgrids. A hierarchical control architecture for the development of EMS is the most commonly found in literature, which implies the necessity of a telecommunications infrastructure to communicate a distributed control layer with an upper layer, where the optimization of the microgrid operation is done. Typically, this layer is developed at an entity called microgrid central controller (MGCC). A general architecture for optimal EMS is provided and analyzed in detail, as well as its future perspectives.
© 2015 The Authors. Published by Elsevier B.V. This is an open access article under the CC BY-NC-ND license (http://creativecommons.org/licenses/by-nc-nd/4.0/).
Peer-review under responsibility of the Conference Program Chairs
Keywords: Energy management; microgrids; optimal control

1. Introduction

One of the biggest problems that mankind has to deal with is global warming and all the consequences related to it. Carbon dioxide emissions (CDE) have to be avoided as much as possible for which purpose drastic changes are urgently needed in the way fossil fuels are used. An important contribution in this field is being done by the increasingly use of renewable energy sources (RES) within power systems.

It is therefore important to contribute in topics associated to energy efficiency, which is linked with the concept of the smart grids (SGs). A broad range of definitions and opinions about SGs have emerged in the past decade and it seems as the perception of the future grid is more standardized now, which incorporates bidirectional telecommunication networks, distributed and centralized controllers, distributed generators and manageable loads, in order to offer an increased reliability, security, energy efficiency and a reduced rate of CDE[1].

* Corresponding author. Tel.: +593-7-405-1000 ; fax: +593-7-405-1005
E-mail address: ismael.minchala@ucuenca.edu.ec

1877-0509 © 2015 The Authors. Published by Elsevier B.V. This is an open access article under the CC BY-NC-ND license (http://creativecommons.org/licenses/by-nc-nd/4.0/).
Peer-review under responsibility of the Conference Program Chairs
doi:10.1016/j.procs.2015.05.133

Microgrids are vital components of SG architectures, which are defined as low voltage (LV) and medium voltage (MV) systems with distributed energy resources (DER), storage devices (SD) and controllable loads (CL), connected to the main power system or isolated. During grid-connected operation of a microgrid it is possible to dispatch DERs active power considering an economic criterion since voltage and frequency regulation is performed at the main grid. In isolated mode is necessary to control DERs to ensure voltage and frequency stability within the microgrid.

Several contributions on control strategies of microgrids have been made. Planas et al.[2] provides details about the control tasks involved in the microgrids management with a review on the main types of controls proposed in the literature. In reference[3] a comprehensive review about advanced control techniques applied to the microgrid control is presented within the framework of standards IEC/ISO 62264. Additional references[4,5] present general concepts, architectures and main literature reviews about EMS for microgrids. These references do not consider important issues related to optimal control for developing EMS for managing microgrids, which motivated the literature review to be presented in this paper. This paper presents a literature review on optimal control techniques applied to the energy management and control of microgrids. A categorization of research papers in the area of design and development of optimal EMS found in the literature is presented, considering their objective function and the optimization method used to solve OCPs related with reliable operation of microgrids. The control architecture used in the EMS is hierarchical, which implies the necessity of a telecommunication infrastructure to communicate a distributed control layer with an upper layer, where the optimization of the microgrid operation is done. The entity which performs this operation is the MGCC.

2. Microgrid operation

Due to the high integration of cutting edge technology within a microgrid, it is a challenge to optimally operate in a coordinated way all the variety of devices installed in a microgrid. Fig. 1 shows a hierarchical control scheme for large power systems that has been adequate for the operation of bulk power systems (BPS), and whose details are presented in[6]. The operating characteristics of a microgrid are different from those of BPS with smaller generation inertia, variable power generation due to RES integration, low fault currents when islanded, etc. A potential hierarchical control of microgrids is discussed in[7–12]. In this context, the primary control is designed for controlling DG units to add virtual inertias and to control output impedances. Secondary control deals with corrections of steady-state errors in frequency and voltage magnitudes produced by the primary control loop. The tertiary control is conceived for energy management according to different design criteria, such as: microgrid stability, environmental issues, etc.

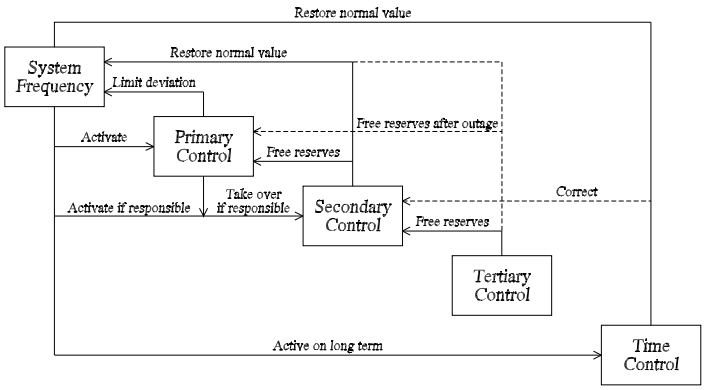

Fig. 1. Hierarchical control scheme for power systems

Consequently, to achieve an effective coordination of this hierarchical control scheme, a centralized microgrid control strategy is envisioned in[12–14], where three controllers are mainly present, as shown in Fig. 2: 1) DER distributed controllers (DC), 2) Microgrid central controller (MGCC), and 3) Distribution management system (DMS).

DCs work at the device level (primary and secondary control) and are designed for a correct operation of every DER. Two levels of inertia in microgrids mean that every DC must be fast and reliable to maintain voltages, frequen-

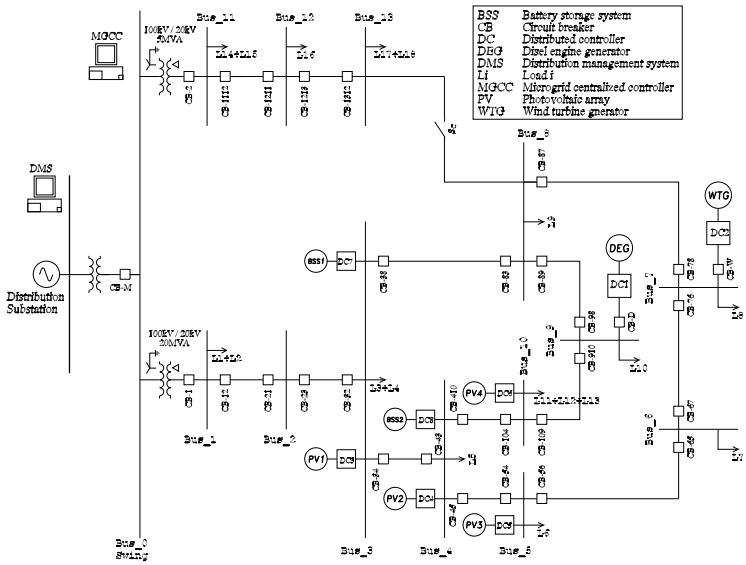

Fig. 2. Microgrid architecture

cies and power flows within acceptable tolerances and to adapt in real time to unknown and variable loads and network conditions. At the MGCC level (tertiary control), the power management of the microgrid is determined based on the information from DERs active power, load demand and storage requirements. A two-way communication between the MGCC and the DCs allows the interchange of power references (set points) sent to the DERs and loads, while each individual DC ensures that the power reference from the central control level is reached. At the DMS level, overall grid demands and stability requirements are met.

Since the MGCC is responsible of the optimization of the microgrid operation, the optimal control techniques to be presented in next section are developed in this entity.

3. Optimal control techniques

Within the framework of environmental and economical issues, and microgrid stability, optimality is directly linked with the minimization of fossil fuels consumption (*e.g.* diesel generation), management of storage units and loads, and to warranty a reliable operation of the microgrid. An OPC needs to be established in order to include a customized cost function and constraints related to this reference framework. Generally speaking an OPC can be represented by:

$$\begin{aligned} \min_{\mathbf{u}} \quad & f(\mathbf{u}) \\ \text{subject to} \quad & \\ & \mathbf{u}_L \leq \mathbf{u} \leq \mathbf{u}_U \\ & \mathbf{b}_L \leq \mathbf{A}\mathbf{u} \leq \mathbf{b}_U \\ & \mathbf{c}_L \leq \mathbf{c}(\mathbf{u}) \leq \mathbf{c}_U \end{aligned} \tag{1}$$

where $\mathbf{u},\ \mathbf{u}_L,\ \mathbf{u}_U \in \mathbb{R}^n$; $f(\mathbf{u}) \in \mathbb{R}$; $\mathbf{A} \in \mathbb{R}^{m_1 \times n}$; $\mathbf{b}_L,\ \mathbf{b}_U \in \mathbb{R}^{m_1}$ and $\mathbf{c}_L,\ \mathbf{c}(\mathbf{u}),\ \mathbf{c}_U \in \mathbb{R}^{m_2}$, represent the control variable, upper and lower limits of $\mathbf{u}$; cost function, matrix of linear constraints, upper and lower limits of the linear constraints; nonlinear constraints, upper and lower limits of $\mathbf{c}(\mathbf{u})$, respectively.

Therefore, the OPC is related with finding the minimum of the real valued function $f(\mathbf{u})$ subject to the defined linear and nonlinear constraints in the continuous-discrete space. The optimal control techniques included in this review for controlling microgrids are classified according to the objective function to be minimized and the optimization method, as show in Fig. 3.

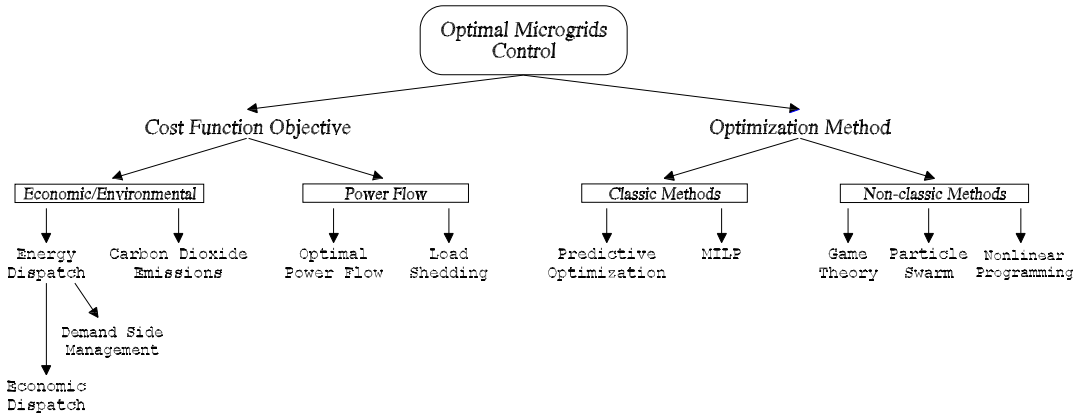

Fig. 3. Classification of optimal control techniques for microgrid control

3.1. Optimal power flow (OPF)

The OPF problem becomes a challenging task in the microgrid operation, due to the RES variability and non-constant load demand, reverse power flows at the transmission-distribution boundaries, which results in an energy export from the distribution network to the transmission grid. Some papers deal with these issues, see for instance [14,15]. A telecommunication infrastructure and the use of smart meters (SM) allow fast interchange of local measurements of power consumption and DER active power generation to feed power flow equations for which the main objective is to balance power production within the microgrid and the load demand. A modeling framework for microgrids with different control tasks is presented in [16] where it is also shown that a set of feasible set points for OPF dispatch in a microgrid has a one-to-one correspondence with a set of reachable steady states by decentralized droop control. Reference [17] presents a weighted-sum objective function for solving a multiobjective optimization problem within the OPF framework to a microgrid with multiple DG units and battery storage systems (BSS), through a niching evolutionary algorithm (NEA). In [18], a centralized controller is proposed which minimizes a quadratic power generation cost function while keeps constant for a frequency reference of the nodes of the grid involved in the minimization function; this result is compared with a distributed controller strategy. In [19], a control strategy is proposed for managing stored energy in order to optimize the overall microgrid power consumption at the point of common coupling (PCC) considering constraints imposed by the storage devices, voltage and limits, and power limits. Additional information on OPF techniques are presented in[20–22].

3.2. Load shedding

Severe power system disturbances can cause the available control actions not sufficient to maintain voltage and frequency stability. To counteract such system's instability issues, special protective algorithms have been designed based on voltage and frequency limits, *e.g.* under voltage load shedding (UVLS) and under frequency load shedding (UFLS) schemes, which work in load shedding relays. An uncoordinated and non-optimal load shedding scenario is commonly performed in the system under these circumstances. This fact summed up with the necessity of a control strategy that guarantees a stable operation of a microgrid when it is operating in islanded mode motivates the researches presented in [23,24], where centralized load shedding strategies for preventing potential outages are designed.

3.3. Economic dispatch

Economic dispatch has been studied for the two operating modes of a microgrid: grid-connected and islanded. Non-autonomous operation optimization, regarding economic aspects is shown in[25–27] where the main objectives are to maximize the local production of the DER units and the power exchanges with the main grid, while optimizing the cost production of the energy. Isolated operation of the microgrid presents several challenging aspects for optimizing

energy costs reduction, mainly due to the variability of power generated by RES and non-constant load demand, for which case predictors based on different algorithms, *e.g.* artificial neural networks (ANNs) assist the optimization techniques. Deeper details on economic dispatch for microgrids working in isolated mode are presented in[28–31].

3.4. Demand side management (DSM)

DSM permits energy users of all kinds to act as virtual power plants (VPP). By voluntarily lowering their demand for electricity based on some pricing scheme, these businesses and organizations help stabilize the grid, and they are paid for providing this important service. Utilities and grid operators treat demand response capacity as a dispatchable resource. In[32], an autonomous centralized strategy is proposed for DSM in a microgrid based on a multi-agent system. The microgrid is equipped with smart devices (entities), which obey the DSM strategy for scheduling the connection moments of shiftable devices in order to adjust the load consumption curve to an objective load consumption curve. Reference[33] proposes two different pricing schemes to predict the adoption of DSM in a microgrid through the use of a game-theoretical framework. A similar approach, using a game-theoretic perspective which attracts the participation of the users through economic incentives, is detailed in[34].

3.5. Carbon dioxide emissions reduction

CDE reduction is one of the principal goals of the SG architectures. In this context, apart from guaranteeing a stable operation of the microgrid, whether it is operating grid-connected or isolated, some research papers have prioritized in their cost function of the optimization algorithm and constraints, variables directly linked with CDE to be minimized, as detailed in[35–38].

3.6. Predictive optimization

The model predictive control (MPC) algorithm has the capability of performing a constrained minimization of a customized cost function over a prediction horizon, based on a system model that predicts the future behavior of the system to find an optimal control sequence, which is used for reaching the control objectives. Details on the MPC algorithm can be found in references[39,40]. There are some research papers related to the development of EMS for microgrids with MPC[41–46]. For instance, in[41,42] a distributed control strategy managed by a supervisor MPC is proposed for manipulating the DERs set points online, which guarantees an optimal energy balance in the microgrid. In[43], a supervisory MPC is designed for optimal power management and control of a hydrogen-based microgrid. Olivares *et al.*[44] proposes a centralized EMS with MPC, which optimizes the dispatch of the energy in storage units, as well as decomposes the energy management problem into two problems: unit commitment and OPF in order to simplify the optimizer performance.

3.7. MILP

Mixed-integer linear programming (MILP) deals with optimization problems in which only selected variables are integers, while the remaining variables are non-integers. Since the number of DERs to be managed in microgrid architectures is an integer number, MILP fits perfectly for this application. Morais et al.[47] uses MILP to search the optimal operation of a wind turbine (WT), a solar unit, a fuel cell and a battery in a microgrid. In[48,49], a centralized DSM strategy is presented to provide online set points for the DG units, operation modes of a water supply system and control signals for consumers, through the minimization of operational costs while keeping energy balance. A forecasting unit for load and generation prediction assists the EMS. The EMS includes non-linear constraints associated to the modeling of both units, and objective function. These constrains are represented by piecewise linear models, binary variables, etc. The optimization problem is solved using MILP ensuring the near-optimality. Additional information of MILP applied to EMS in microgrids is detailed in[20,50,51].

3.8. Non-classic optimization techniques

Several other optimization techniques for similar purposes are listed below:

- Niching evolutionary algorithm (NEA)[17]
- Genetic algorithms (GA)[35,52]
- Game theory and multi-agents[32–34]
- Adaptive search algorithms[53–55]
- Mixed integer nonlinear programming (MINLP)[56,57]

4. Discussion

Centralized EMS for microgrid control is a non-standardized control architecture that is maturing thanks to the contributions of the scientific and industry community related to the SGs technology development. Distributed controllers commanding DG units for primary and secondary loop control are of vital importance for a good performance of an EMS, since typically the optimization procedures are developed at this level of the control hierarchy prior to sending online set points to the DCs through the telecommunication infrastructure. A general structure of an EMS for a microgrid with DERs is shown in Fig. 4, where it is remarkable the necessity of a load forecasting unit and a RES power generation predictor to guarantee a reliable energy balance in extended periods (overall under changing weather conditions), an increased RES power production in order to decrease CDE, an adequate energy storage and its usage, as well as competitive prices that allow load scheduling scenarios.

Since a centralized controller is used, an advanced metering infrastructure (AMI) is required in the microgrid. Therefore, it is assumed that every load has an SM. The SM performs instantaneous voltage, current and power measurements, energy measurements, and power quality data, and has communications capability. Operating microgrids around the world demonstrate that this control architecture is suitable for a sustainable, long-term and scalable operation[58,59].

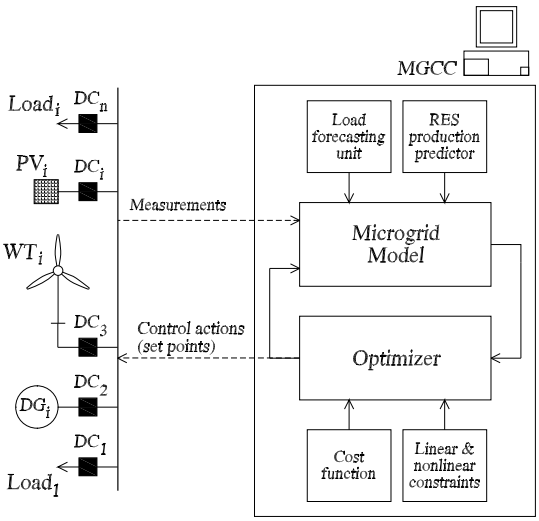

Fig. 4. General architecture of an optimal EMS

5. Conclusions

Despite of the optimization technique used to solve the OPC, a basic requirement of the microgrid control is to assure a proper balance between the power generated within a microgrid and the demand load to avoid instability problems in the microgrid operation. There is a variety of optimization techniques to design an optimal energy management and control system for microgrids, ranging from classic optimization techniques, *e.g.* minimization of a simplified linear optimal control problem through a least square minimization algorithm to complex, predictive, and multi-objective optimization techniques. From the predictive perspective, MPC is attractive for managing microgrids

due to its ability to operate based on future behaviors of the system. In problems related with power scheduling, which depend on forecasted values of demand and RES production, the MPC method would be very effective.

Additionally, the increasingly less inertia present in a microgrid should be carefully considered. The objective of the droop control is to compensate for instantaneous mismatch between scheduled power and power demanded by loads. A DG unit can maintain its power generation (constant if possible) whenever a master generation unit or the main grid handles the power mismatch. If two or more DER units participate in grid stabilization and voltage regulation, the frequency-droop and voltage-droop control strategies should be used.

References

1. H. Farhangi, The path of the smart grid, Power Energy Mag. IEEE, vol. 8, no. february, pp. 1828, Jan. 2010
2. E. Planas, A. Gil-De-Muro, J. Andreu, I. Kortabarria, and I. Martnez De Alegra, General aspects, hierarchical controls and droop methods in microgrids: A review, Renewable and Sustainable Energy Reviews, vol. 17. pp. 147159, 2013
3. O. Palizban, K. Kauhaniemi, and J. M. Guerrero, Microgrids in active network managementPart I: Hierarchical control, energy storage, virtual power plants, and market participation, Renew. Sustain. Energy Rev., vol. 36, pp. 428439, 2014
4. Y. Zhang, M. Mao, M. Ding, L. Chang, and S. Member, Study of energy management system for distributed generation systems, in 2008 Third International Conference on Electric Utility Deregulation and Restructuring and Power Technologies, 2008, pp. 24652469
5. D. Paire and A. Miraoui, Power management strategies for microgrid-A short review, in 2013 IEEE Industry Applications Society Annual Meeting, 2013, pp. 19
6. UCTE, Policy 1: Load-Frequency Control and Performance [C], 2009
7. J. M. Guerrero, J. C. Vasquez, J. Matas, L. G. De Vicua, and M. Castilla, Hierarchical control of droop-controlled AC and DC microgrids - A general approach toward standardization, IEEE Trans. Ind. Electron., vol. 58, pp. 158172, 2011
8. H. Bouattour, J. W. Simpson-Porco, F. Dorfler, and F. Bullo, Further results on distributed secondary control in microgrids, 52nd IEEE Conf. Decis. Control, pp. 15141519, Dec. 2013
9. Q. Shafiee, J. M. Guerrero, and J. C. Vasquez, Distributed secondary control for islanded microGrids - A novel approach, IEEE Trans. Power Electron., vol. 29, pp. 10181031, 2014
10. S. Anand, B. G. Fernandes, and J. Guerrero, Distributed control to ensure proportional load sharing and improve voltage regulation in low-voltage dc microgrids, IEEE Trans. Power Electron., vol. 28, no. 4, pp. 19001913, Apr. 2013
11. J. M. Guerrero, M. Chandorkar, T. Lee, and P. C. Loh, Advanced control architectures for intelligent microgrids Part I: Decentralized and hierarchical control, IEEE Trans. Ind. Electron., vol. 60, pp. 12541262, 2013
12. R. Zamora and A. K. Srivastava, Controls for microgrids with storage: Review, challenges, and research needs, Renew. Sustain. Energy Rev., vol. 14, no. 7, pp. 20092018, Sep. 2010
13. H. Jiayi, J. Chuanwen, and X. Rong, A review on distributed energy resources and MicroGrid, Renew. Sustain. Energy Rev., vol. 12, no. 9, pp. 24722483, Dec. 2008
14. J. Proano, Microgrid power flow study in grid-connected and islanding modes under different converter control strategies, in 2012 IEEE Power and Energy Society General Meeting, 2012, pp. 18
15. H. Yang, F. Wen, and L. Wang, Newton-Raphson on power flow algorithm and Broyden method in the distribution system, in PECon 2008 - 2008 IEEE 2nd International Power and Energy Conference, 2008, pp. 16131618
16. F. Dorfler and F. Bullo, Breaking the hierarchy: Distributed control & economic optimality in microgrids, arXiv Prepr. arXiv1401.1767, 2014
17. S. Conti, R. Nicolosi, S. A. Rizzo, and H. H. Zeineldin, Optimal dispatching of distributed generators and storage systems for MV islanded microgrids, IEEE Trans. Power Deliv., vol. 27, pp. 12431251, 2012
18. M. Andreasson, D. V Dimarogonas, K. H. Johansson, and H. Sandberg, Distributed vs. centralized power systems frequency control, in 2013 European Control Conference (ECC), 2013, pp. 35243529
19. Y. Levron, J. M. Guerrero, and Y. Beck, Optimal power flow in microgrids with energy storage, IEEE Trans. Power Syst., vol. 28, pp. 32263234, 2013
20. Y. Zhou, H. Held, W. Klein, and K. Majewski, SoftGrid: A green field approach of future smart grid., SMARTGREENS, pp. 511, 2013
21. V. Logeshwari, N. Chitra, a. Senthil Kumar, and J. Munda, Optimal power sharing for microgrid with multiple distributed generators, Procedia Eng., vol. 64, pp. 546551, Jan. 2013
22. E. Sortomme and M. A. El-Sharkawi, Optimal power flow for a system of microgrids with controllable loads and battery storage, in 2009 IEEE/PES Power Systems Conference and Exposition, PSCE 2009, 2009
23. J. Michaelson, D., Mahmood, H., & Jiang, A predictive energy management strategy with pre-emptive load shedding for an islanded PV-battery microgrid, in Industrial Electronics Society, IECON 2013-39th Annual Conference of the IEEE, 2013, pp. 15011506
24. H. Seyedi and M. Sanaye-Pasand, New centralised adaptive load-shedding algorithms to mitigate power system blackouts, IET Gener. Transm. Distrib., vol. 3, no. 1, pp. 99114, 2009
25. A. G. Tsikalakis and N. D. Hatziargyriou, Centralized control for optimizing microgrids operation, IEEE Trans. Energy Convers., vol. 23, no. 1, pp. 241248, 2008
26. M. Laera, S. Roggia, M. Dicorato, G. Forte, and M. Trovato, A procedure for day-ahead optimal operation planning of a MicroGrid, in IEEE PES ISGT Europe 2013, 2013, pp. 15
27. H. Daneshi and H. Khorashadi-Zadeh, Microgrid energy management system: A study of reliability and economic issues, 2012 IEEE Power Energy Soc. Gen. Meet., pp. 15, 2012
28. S. Conti, R. Nicolosi, and S. A. Rizzo, Optimal dispatching of distributed generators in an MV autonomous micro-grid to minimize operating costs and emissions, in IEEE International Symposium on Industrial Electronics, 2010, pp. 25422547

29. P. Lombardi, M. Powalko, and K. Rudion, Optimal operation of a virtual power plant, in IEEE Power and Energy Society General Meeting, 2009, pp. 16
30. J. P. Torreglosa, P. Garca, L. M. Fernndez, and F. Jurado, Hierarchical energy management system for stand-alone hybrid system based on generation costs and cascade control, Energy Convers. Manag., vol. 77, pp. 514526, 2014
31. S. Mohammadi, B. Mozafari, and S. Soleymani, Optimal operation management of microgrids using the point estimate method and firefly algorithm while considering uncertainty, Turkish J. Electr. Eng. Comput. Sci., vol. 22, pp. 735753, 2014
32. T. Logenthiran, D. Srinivasan, and T. Z. Shun, Multi-agent system for demand side management in smart grid, in 2011 IEEE Ninth International Conference on Power Electronics and Drive Systems, 2011, pp. 424429
33. D. Miorandi and F. De Pellegrini, Demand-side management in smart grids: an evolutionary games perspective, Proc. 6th Int. Conf. Perform. Eval. Methodol. Tools, pp. 178187, 2012
34. A. H. Mohsenian-Rad, V. W. S. Wong, J. Jatskevich, R. Schober, and A. Leon-Garcia, Autonomous demand-side management based on game-theoretic energy consumption scheduling for the future smart grid, IEEE Trans. Smart Grid, vol. 1, pp. 320331, 2010
35. A. Sadegheih, Optimal design methodologies under the carbon emission trading program using MIP, GA, SA, and TS, Renew. Sustain. Energy Rev., vol. 15, no. 1, pp. 504513, Jan. 2011
36. A. Hooshmand, H. A. Malki, and J. Mohammadpour, Power flow management of microgrid networks using model predictive control, Computers & Mathematics with Applications, vol. 64. pp. 869876, 2012
37. H. Kanchev, V. Lazarov, and B. Francois, Environmental and economical optimization of microgrid long term operational planning including PV-based active generators, in 2012 15th International Power Electronics and Motion Control Conference (EPE/PEMC), 2012, pp. LS4b2.11LS4b2.18
38. A. Chaouachi, R. M. Kamel, R. Andoulsi, and K. Nagasaka, Multiobjective intelligent energy management for a microgrid, IEEE Trans. Ind. Electron., vol. 60, pp. 16881699, 2013
39. L. Grne and J. Pannek, Nonlinear Model Predictive Control, in Nonlinear Model Predictive Control, 2011, pp. 6785
40. E. F. Camacho, Predictive control with constraints, Automatica, vol. 39. pp. 11171118, 2003
41. W. Qi, J. Liu, and P. D. Christofides, A distributed control framework for smart grid development: Energy/water system optimal operation and electric grid integration, J. Process Control, vol. 21, no. 10, pp. 15041516, Dec. 2011
42. W. Qi, J. Liu, X. Chen, and P. D. Christofides, Supervisory predictive control of standalone wind/solar energy generation systems, IEEE Trans. Control Syst. Technol., vol. 19, no. 1, pp. 199207, Jan. 2011
43. L. Valverde, C. Bordons, and F. Rosa, Power management using model predictive control in a hydrogen-based microgrid, in IECON 2012 - 38th Annual Conference on IEEE Industrial Electronics Society, 2012, pp. 56695676
44. D. E. Olivares, C. A. Canizares, and M. Kazerani, A centralized energy management system for isolated microgrids, IEEE Trans. Smart Grid, vol. 5, no. 4, pp. 18641875, Jul. 2014
45. I. Prodan and E. Zio, A model predictive control framework for reliable microgrid energy management, Int. J. Electr. Power Energy Syst., vol. 61, pp. 399409, 2014
46. A. Parisio, E. Rikos, G. Tzamalis, and L. Glielmo, Use of model predictive control for experimental microgrid optimization, Appl. Energy, vol. 115, pp. 3746, 2014
47. H. Morais, P. Kdr, P. Faria, Z. A. Vale, and H. M. Khodr, Optimal scheduling of a renewable micro-grid in an isolated load area using mixed-integer linear programming, Renew. Energy, vol. 35, pp. 151156, 2010
48. R. Palma-Behnke, C. Benavides, E. Aranda, J. Llanos, and D. Sez, Energy management system for a renewable based microgrid with a demand side management mechanism, in IEEE SSCI 2011 - Symposium Series on Computational Intelligence - CIASG 2011: 2011 IEEE Symposium on Computational Intelligence Applications in Smart Grid, 2011, pp. 131138
49. R. Palma-Behnke, C. Benavides, F. Lanas, B. Severino, L. Reyes, J. Llanos, and D. Saez, A microgrid energy management system based on the rolling horizon strategy, IEEE Trans. Smart Grid, vol. 4, pp. 9961006, 2013
50. P. Malysz, S. Sirouspour, and A. Emadi, MILP-based rolling horizon control for microgrids with battery storage, in IECON 2013 - 39th Annual Conference of the IEEE Industrial Electronics Society, 2013, pp. 20992104
51. W. Alharbi and K. Bhattacharya, Demand response and energy storage in MV islanded microgrids for high penetration of renewables, in 2013 IEEE Electrical Power & Energy Conference, 2013, pp. 16
52. A. Sadegheih, P. R. Drake, D. Li, and S. Sribenjachot, Global supply chain management under the carbon emission trading program using mixed integer programming and genetic algorithm, Int. J. Eng. Trans. B Appl., vol. 24, pp. 3753, 2011
53. T. Niknam, F. Golestaneh, and A. Malekpour, Probabilistic energy and operation management of a microgrid containing wind/photovoltaic/fuel cell generation and energy storage devices based on point estimate method and self-adaptive gravitational search algorithm, Energy, vol. 43, no. 1, pp. 427437, Jul. 2012
54. T. Niknam, F. Golestaneh, and M. Shafiei, Probabilistic energy management of a renewable microgrid with hydrogen storage using self-adaptive charge search algorithm, Energy, vol. 49, pp. 252267, Jan. 2013
55. R. Arul, G. Ravi, and S. Velusami, Chaotic self-adaptive differential harmony search algorithm based dynamic economic dispatch, Int. J. Electr. Power Energy Syst., vol. 50, pp. 8596, Sep. 2013
56. M. Marzband, A. Sumper, J. L. Domnguez-Garca, and R. Gumara-Ferret, Experimental validation of a real time energy management system for microgrids in islanded mode using a local day-ahead electricity market and MINLP, Energy Convers. Manag., vol. 76, pp. 314322, 2013
57. A. Parisio and L. Glielmo, A mixed integer linear formulation for microgrid economic scheduling, in 2011 IEEE International Conference on Smart Grid Communications (SmartGridComm), 2011, pp. 505510
58. N. W. a. Lidula and a. D. Rajapakse, Microgrids research: A review of experimental microgrids and test systems, Renew. Sustain. Energy Rev., vol. 15, no. 1, pp. 186202, Jan. 2011
59. J. Ostergaard and J. Nielsen, The Bornholm Power System an Overview, 2008