Available online at www.sciencedirect.com

ScienceDirect

Energy Procedia 63 (2014) 1996 – 2007

Energy Procedia

GHGT-12

Thermodynamic system studies for a natural gas combined cycle (NGCC) plant with CO_2 capture and hydrogen storage with metal hydrides

A. Thallam Thattai[a,*], B. J. Wittebrood[a], Theo Woudstra[a], J. J. C. Geerlings[b], P. V. Aravind[a]

[a]*Section Energy Technology, Process & Energy Department, Faculty of 3mE, Delft University of Technology, Leeghwaterstraat 39, 2628CB, Delft, The Netherlands*

[b]*Department of Chemical Engineering, Delft University of Technology, Julianalaan 136, 2628 BL Delft, The Netherlands*

Abstract

Flexibility in natural gas combined cycle power plants (NGCC) with pre-combustion CO_2 capture could be introduced with co-production of hydrogen and subsequent hydrogen storage with metal hydrides (MH). The current work presents a thermodynamic analysis and comparison between steady state ASPEN Plus models of a reference case NGCC plant with no capture and H_2 storage, an NGCC plant with pre-combustion capture using gas heated - auto thermal reformer (GHR-ATR) combined with a sorption enhanced water gas shift (SEWGS) unit and a NGCC model with capture and a metal hydride (MH) based hydrogen storage unit. Results have been presented for a high temperature hydride (MgH_2) and a medium temperature hydride (Na_3AlH_6). A net plant efficiency of about 48% was achieved for the system with only capture. Addition of hydrogen storage in this system shows that such plants can be still operated at comparable time based average efficiency of about 47% with an appropriate heat integration in the system. Operating the metal hydride at different temperatures does not reflect reduction in efficiency but a lower equilibrium temperature seems more beneficial particularly for a practical economizer in the HRSG. It is concluded that MH based hydrogen storage in NGCC plants with pre-combustion CO_2 capture is a promising option to manage fluctuations in power demand and further investigations are required particularly on heat integration, effect of H_2 purification technologies and economic assessment.

© 2014 The Authors. Published by Elsevier Ltd. This is an open access article under the CC BY-NC-ND license (http://creativecommons.org/licenses/by-nc-nd/3.0/).

Peer-review under responsibility of the Organizing Committee of GHGT-12

Keywords: NGCC; pre-combustion CO_2 capture; SEWGS; hydrogen storage; metal hydrides

1. Introduction

Natural gas combined cycle plants (NGCC) with carbon dioxide (CO_2) capture seem to be attractive technology for near future power/fuel production owing to their relatively high efficiency, low costs, reduced GHG emissions and high reliability. Fluctuations in electricity demand and the need to increase renewable electricity production in the coming decades require research in more flexible power production technologies.

Nomenclature

ASU	Air Separation Unit
CATO	CO_2 Afvang, Transport en Opslag (CO_2 capture, transport and storage)

* Aditya Thallam Thattai. Tel.: +31-15-2786662.
E-mail address: A.ThallamThattai@tudelft.nl

1876-6102 © 2014 The Authors. Published by Elsevier Ltd. This is an open access article under the CC BY-NC-ND license (http://creativecommons.org/licenses/by-nc-nd/3.0/).

Peer-review under responsibility of the Organizing Committee of GHGT-12
doi:10.1016/j.egypro.2014.11.214

CCR	Carbon capture ratio
CCS	Carbon Capture and Storage
EBTF	European Benchmarking Task Force
EU	European Union
GHG	Greenhouse Gas
GHR-ATR	Gas Heated Reformer-Auto thermal Reformer
GT	Gas Turbine
HP	High Pressure
HRSG	Heat Recovery Steam Generator
HT	High Temperature
HTS	High temperature Shift
LHV	Lower Heating Value (kJ/kg)
LP	Low Pressure
MH	Metal Hydride
MP	Medium Pressure
MT	Medium Temperature
NGCC	Natural Gas Combined Cycle
SEWGS	Sorption Enhanced Water Gas Shift
TOT	Turbine Outlet Temperature
WGS	Water Gas Shift

Power storage options are capable to cope with the variations in net power resulting in more reliable electrical power supply and reduction in electricity costs. Different power storage systems have been developed in the last decades to handle the fluctuations in the net power demand. Hydrogen storage in metal hydrides is considered as a potential technology to be used in NGCC power plants to increase the flexibility with respect to the power demand. Storage in metal hydrides has the benefit with respect to other system like compressed/cryogenic storage in that it requires lower pressures and reduced volumes [1]. An additional advantage of using metal hydrides in such systems is the possibility of integrating the thermal effects in charging and discharging with the steam cycle resulting in a flexible system that could maintain high efficiencies of the storage system and the plant during peak and off-peak hours.

The daily network power load in the Netherlands varies approximately between 50% and 100% of the peak power demand [2]. In order to meet actual load requirements the NGCC plants could operate in the mid (50%) and peak load range. NGCC plants with CO_2 capture and hydrogen storage could be a good option in this respect, also considering the emission requirements in the EU, the 20-20-20 target [3]. Hydrogen storage introduces extra flexibility in the NGCC power plant by storing hydrogen in off-peak hours and release hydrogen during peak hours to increase the power production in order to follow the daily electricity demand. Additionally, the hydrogen storage system ensures that the reformer and CO_2 capture unit can operate in base load with minimum installed capacity and at maximum efficiency resulting in less capital and operational costs. Research on large scale combined cycle systems with CO_2 capture combined with metal hydride based hydrogen storage has been limited. The major challenges in developing such systems are process design, integration and heat management due to the different nature of the metal hydride charging (exothermic) and discharging (endothermic) reactions. The current work presents a thermodynamic system analysis of such a system using ASPEN Plus steady state models. A pre-combustion capture option is chosen in order to facilitate hydrogen co-production and storage. In order to separate carbon from natural gas, the gas is first reformed into carbon monoxide (CO) and hydrogen (H_2) with the overall endothermic reactions:

$$CH_4 + H_2O \rightarrow 3H_2 + CO \qquad \Delta H = 206.2 kJ/mol \tag{R1a}$$

$$2CH_4 + O_2 \rightarrow 4H_2 + 2CO \qquad \Delta H = -36 kJ/mol \tag{R1b}$$

CO then further undergoes the exothermic water gas shift (WGS) reaction to yield CO_2 and H_2 :

$$CO + H_2O \rightarrow CO_2 + H_2 \qquad \Delta H = -41.1 kJ/mol \tag{R2}$$

A high temperature shift (HTS) reactor and the novel sorption enhanced water gas shift (SEWGS) technology has been used to carry out the water gas shift reaction (R2); yielding simultaneously a high temperature H_2 rich gas and CO_2 rich gas. In order to understand the effect of capture and H_2 storage on NGCC plants, the study has been performed by developing three system models – a reference case NGCC without CO_2 capture and H_2 storage, a NGCC system model with pre-combustion capture utilizing a gas heated reformer-auto thermal reformer (GHR-ATR) and SEWGS and lastly a NGCC system with both capture and

metal hydride based H_2 storage. The following section gives a brief description of the system configuration as considered in this work and a brief introduction to the SEWGS technology.

2. NGCC plant with pre-combustion capture and metal hydride based H_2 storage

2.1 Process configuration

Fig.1. shows the process scheme for the system considered in this study. Fuel and oxygen (from the ASU) is preheated and fed to the GHR-ATR. Pure O_2 is used in the reformer instead of air to prevent N_2 dilution. The air separation unit (ASU) has not been modelled in detail in this study; the power consumption of which although has been accounted for. Air for the ASU is not obtained from the gas turbine compressor and hence the system is not a fully integrated system. Steam required for the reforming reaction is extracted from the outlet of the HP turbine. The obtained syngas at the outlet of the reformer is fed to the HTS unit where part of the CO is converted to CO_2. The obtained gas at the HTS outlet is then fed to the SEWGS reactors for complete conversion of CO to CO_2. The CO_2 rich stream consists of mainly water which can be easily removed by dehumidification/flashing. The pure CO_2 stream is then compressed to the desired pressure and is available for storage.

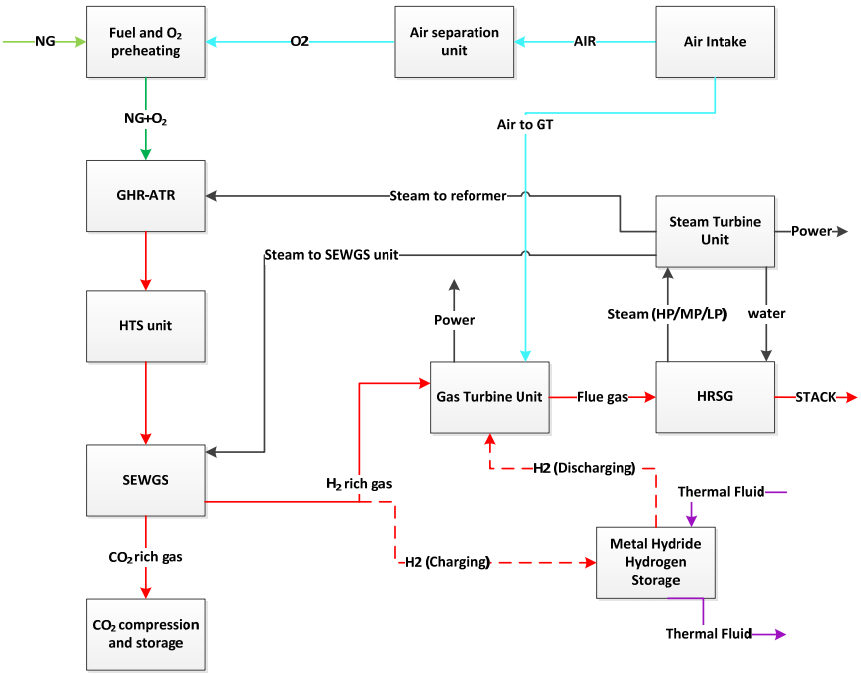

Fig. 1. Process scheme - NGCC plant with pre-combustion CO_2 capture and metal hydride based H_2 storage

The heat integration between the metal hydride and a thermal fluid DOWTHERM-A as the heat transfer medium allows flexible switching between charging and discharging. Heat transfer from the thermal fluid is used to generate steam during the charging mode (exothermic) while heat is provided to the oil from the flue gases during the discharging mode (endothermic). The fluid has been reported to be stable at high operating temperatures [4] and is used for the heat transfer in this study only in its liquid phase to ensure isothermal behavior in the MH reactor

2.1 The SEWGS Cycle

The sorption enhanced water gas shift (SEWGS) technology developed at the Energy Research Center of the Netherlands (ECN) is a powerful and efficient process for simultaneously carrying out the WGS reaction and in parallel capturing CO_2. The main advantage of the process include the high conversion of CO to H_2 by the shift reaction through the selective removal of the product CO_2 [5]. Also the process is operated entirely at high temperature yielding hot streams of CO_2 and H_2. Hydrogen obtained at high temperature with excess steam results in higher efficiency and reduced NO_x emissions [5, 6]. The SEWGS unit produces two streams: a H_2 rich gas (>70% mol H_2) which is sent to the gas turbine combustor or stored and a CO_2 rich gas (>95% mol CO_2) which is sent to the CO_2 storage unit.

In the SEWGS process, a K_2CO_3 promoted hydrotalcite- based sorbent is used to adsorb CO_2 and also as a catalyst for the shift reaction. The temperature of operation is typically 400°C. The SEWGS cycle is shown in Fig 2. The process utilizes 6 parallel reactors each consisting of 5 steps: feed (adsorption and shift takes place), rinse for clearing voids, depressurization, purge for sorbent regeneration and repressurization. The feed step involves feeding the reactor with syngas obtained from the pre-shift reactor to produce hydrogen. Next the reactor is rinsed with medium pressure steam to obtain syngas which is mixed with the feed. A pressure equalization step follows where the rinse gas expands through the reactor pushing the interstitial syngas to a reactor at lower pressure.In the blowdown (bd) and purge steps, CO_2 is collected. With the repressurization of the reactor with part of the hydrogen, the reactor is ready for the next cycle. Process data for SEWGS has been obtained from literature [7]. This work presents results based on data for Sorbent Beta, which is the most advanced sorbent. The next section gives modeling assumptions, approach and description of the three system models developed during this study.

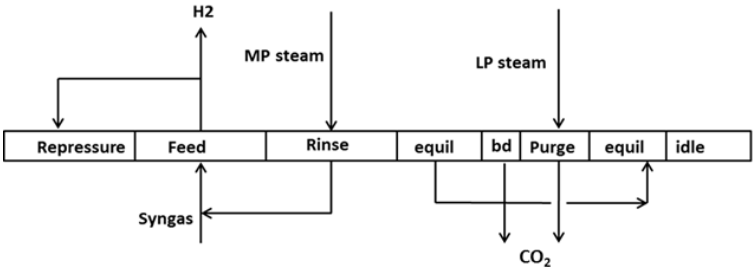

Fig. 2. SEWGS process cycle [5] – 6 parallel reactors generate simultaneously high temperature H_2 and CO_2 rich gas streams

3. System Models: Assumptions & Description

The NGCC system models developed in this work are based on a common European reference framework as defined by the European Benchmark Task Force (EBTF) document [8]. This document defines overall performance criteria and compositions for combined cycle power plants. ASPEN Plus process modelling package has been used to develop all the system models using the Soave-Redlich-Kwong (SRK) equation of state as the thermodynamic model and ASME 1967 steam table correlations (STEAM-TA) for the steam cycle. The EBTF document [8] natural gas feed composition is shown in Table 1.

Table 1. Natural Gas Fuel Composition (EBTF)

	CH_4	C_2H_6	C_3H_8	n-C_4H_{10}	iso-C_4H_{10}	n-C_5H_{12}	iso-C_5H_{12}	CO_2	N_2
% vol	89	7	1	0.051	0.05	0.005	0.004	2	0.89

3.1Reference Case – NGCC without CO_2 capture and H_2 Storage

Fig 3 shows the simplified ASPEN flow sheet for the reference case NGCC system. A triple-pressure steam cycle has been used as suggested in the EBTF document. The heat recovery steam generator (HRSG) is used to generate steam at 3 pressure levels for the steam turbines (HP, MP and LP) and also to preheat the feed water exiting the condenser. It consists of 6 economizers, 3 evaporators, 3 superheaters and one reheater which are used to generate steam at 3 different pressure levels. The entire network of these heat exchangers has also been modeled and integrated with the system. The main parameters and assumptions for the components in the system model have been listed in Table 2. Natural gas is mixed with compressed air and sent to the GT combustor. The GT combustor has been modeled using a Gibbs free energy minimization reactor model. A pressure drop of 0.5 bar and heat loss of 2 MW is assumed in the combustor. As recommended by the EBTF document, a turbine outlet temperature (TOT) of 603°C is maintained. The gas turbine isentropic efficiency is set to obtain a net GT cycle efficiency of 39% (valid for a state-of-art F class gas turbine). Air flow is calculated to achieve the desired TOT. A steam turbine inlet temperature of 550°C is used for the HP and MP turbine. The pressure levels in the steam cycle are calculated (approximate) based on the saturation temperatures obtained from the following relation:

$$T_{sat,HP} = \sqrt[4]{T_{GT}^3 * T_c} \tag{1}$$

$$T_{sat,MP} = \sqrt[4]{T_{GT}^2 * T_c^2} \tag{2}$$

$$T_{sat,LP} = \sqrt[4]{T_{GT} * T_c^3} \tag{3}$$

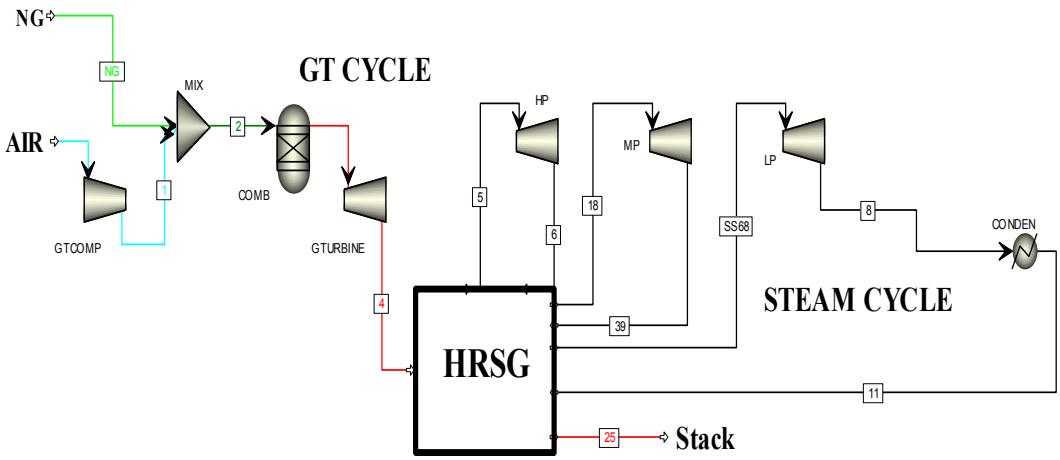

Fig. 3. Simplified ASPEN flowsheet – Reference NGCC plant without CO_2 capture and H_2 storage.

Where T_{GT} and T_c are the TOT and the condenser temperature respectively. The flow rate of HP/MP/LP steam has been calculated to achieve a fixed pinch temperature of 10°C in the corresponding evaporators. Pressure losses have not been taken into account in the HRSG considering the nature of this study but will be considered in future work.

Table 2. Main input parameters – Reference Case

GT Air Compressor		Condenser	
Pressure ratio	18:1	Pressure (bar)	0.048
Isentropic efficiency (%)	89.5%	Exit Temperature (°C)	26
Mechanical efficiency (%)	99.6%	**Pumps**	
GT Combustor		Discharge pressure HP/MP/LP (bar)	120/32/5
Pressure drop (bar)	0.5	Pump efficiency (%)	70%
Heat loss (MW)	2	Flow rate (kg/s)	Calculated for pinch of 10°C during evaporation
Gas Turbine		**Steam Turbine**	
Pressure ratio	0.0552	HP inlet pressure (bar)	120
Turbine outlet temperature (°C)	603	MP inlet pressure (bar)	32
Isentropic efficiency (%)	88%	LP inlet pressure (bar)	5
		Isentropic efficiency (%)	90%

3.2 NGCC with CO_2 capture – using GHR-ATR and SEWGS

As the second step, a model has been developed for a NGCC plant with capture using a combined gas heated reformer-auto thermal reformer (GHR-ATR) and SEWGS technology. Additional components in this model include the GHR-ATR unit, high temperature shift (HTS) unit, SEWGS unit and the CO_2 compression unit. The main component assumptions for this model are tabulated in Table 3. The GHR-ATR is a heat exchanger type of a reactor where the heat from the outlet of the ATR is used to carry out some pre-reforming in the GHR [9, 10]. Preheated natural gas and steam from the HP turbine enter the Gibbs free energy minimization reactor (GHR). The pre-reformed gas is then sent to the ATR where pure O_2 from the ASU is fed to complete the reforming reaction/partial oxidation. The reformer operates at a high pressure of 25 bar [11,12]. The flow rate of O_2 to the ATR unit is calculated to achieve an equilibrium temperature of 1050°C [10]. The steam flow required for reforming is calculated from the steam-to-carbon ratio for the ATR which is assumed to be 2.5 [10]. The reformed gas from the GHR-ATR is

then cooled down to around 310°C and fed to the HTS reactor. The gas obtained from the HTS reactor is cooled down to 400°C and sent to the SEWGS unit. Heat produced during the cooling processes is integrated with the HRSG and partly is used to preheat steam for the SEWGS unit.

Fig 4. shows the ASPEN Plus flowsheet for the SEWGS unit. A stoichiometric reactor (SEWGS) is used to carry out the WGS reaction with 95% conversion. A simple separator (SEWGSSEP) is used to separate the CO_2 from the H_2 rich gas. The split fraction for the separator has been defined in order to achieve a carbon capture ratio (CCR) of 95%. CO_2 rich gas is mixed with rinse (high pressure) and purge (low pressure) steam. Rinse and purge steam for the SEWGS unit is obtained from the HP steam turbine outlet. The flow rates for these streams is calculated using the S/C ratio for rinse and purge (see Table 3). The ratios have been obtained from modeling and experimental data as reported in literature [13]. The H_2 rich gas and the CO_2 rich gas are passed through a heat exchanger to obtain homogeneity in temperatures at the outlet. The H_2 rich gas is sent to the GT combustor; the CO_2 rich gas is cooled down by preheating the natural gas fuel and also O_2 for the GHR-ATR. The cooled CO_2 rich gas is sent to the CO_2 unit for further separation and compression.

The CO_2 unit has been modeled based on the specifications provided in the EBTF. The CO_2 rich gas is cooled and water is flashed out. Pure CO_2 is then passed through a three stage compression process with intercooling. The intercooling temperature for all the 3 stages has been taken as 28°C. The CO_2 purity is increased by separating additional water during the compression process. The final pressure of the CO_2 stream after the compression process is fixed at 80 bar. A pump is then used to pump the dense CO_2 at the final delivery pressure of 110 bar.

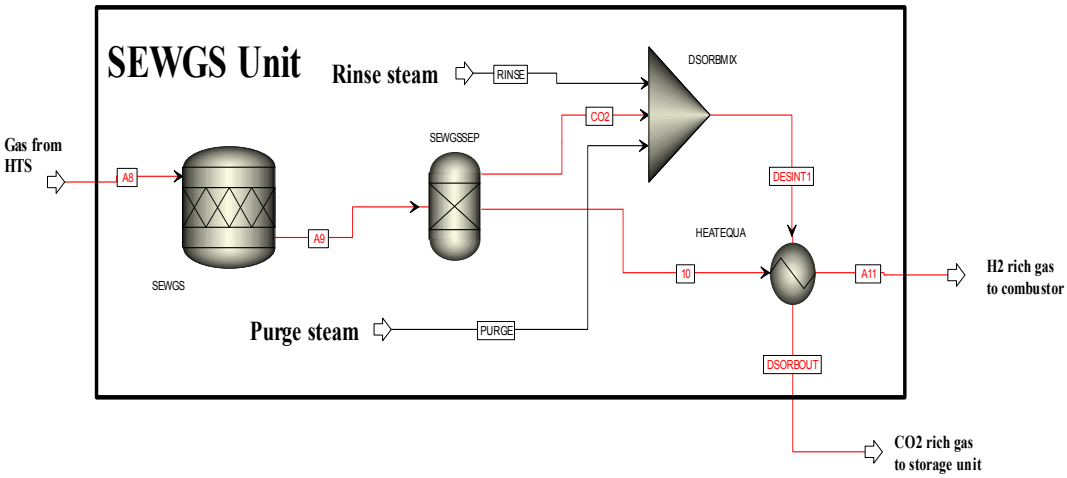

Fig. 4. ASPEN flowsheet – SEWGS unit producing H_2 and CO_2 rich gas streams

Table 3. Main input parameters – GHR-ATR, SEWGS and CO_2 unit

GHR-ATR		CO_2 unit	
ATR equilibrium temperature (°C)	1050	CO_2 flashing temperature (°C)	50
S/C ratio	2.5	Final delivery pressure (bar)	110
Pressure (bar)	25	Final delivery temperature (°C)	25
SEWGS unit		CO_2 pump efficiency (%)	75
Inlet Temperature (°C)	400	CO_2 pump driver efficiency (%)	95
S/C ratio - Rinse	0.23	Compressor intercooling temperature (°C)	28
S/C ratio - Purge	0.85	Carbon capture ratio (%)	95
Purge steam pressure (bar)	1.1	CO_2 stream purity (% vol)	99.6
Purge steam temperature (°C)	400	Discharge pressure final stage (bar)	80
Rinse steam temperature (°C)	400		

3.3 NGCC with CO_2 capture and H_2 storage – using metal hydrides

Numerous metal hydrides exist with varying thermodynamic properties. The selection of hydrides for this study was based on the operating pressure and temperature range in the system, the required hydrogen concentration and cyclability. Assumptions are taken in order to simplify the non-ideal metal hydride behavior in a real practical reactor. Following assumptions are made for the metal hydride operation –

- Full conversion of metal to metal hydride in an isothermal reactor.
- A daily cycle of 12 hours charging and 12 hours discharging.
- A constant pressure drop of 3 bar in the reactor bed and no hysteresis.
- No heat losses through the reactor wall and ideal heat transfer between the thermal fluid and metal hydride

In order to understand the implications in different temperature ranges, models were developed for a high temperature hydride and a medium temperature hydride. Based on the above mentioned criteria, MgH_2 was selected for the high temperature range while Na_3AlH_6 was selected for the medium temperature range. The charging and discharging reactions for these hydrides are:

$$Mg(s) + H_2(g) \underset{discharging}{\overset{charging}{\rightleftharpoons}} MgH_2(s) \tag{R3}$$

$$3NaH + Al + \frac{3}{2}H_2 \underset{discharging}{\overset{charging}{\rightleftharpoons}} Na_3AlH_6 \tag{R4}$$

Table 4. Properties, pressure and temperature– selected metal hydrides [14, 15]

Parameter	MgH_2	Na_3AlH_6
Heat of reaction ΔH (kJ/kg)	76000	51000
Change in entropy ΔS (kJ/kg-K)	135.6	133.5
Charging Plateau pressure (bar)	22	22
Charging Equilibrium temperature (°C)	418	264
Discharging Plateau pressure (bar)	28	28
Discharging Equilibrium temperature (°C)	431	281.5
Van't Hoff equation	$\ln(P) = \frac{\Delta H}{RT} - \frac{\Delta S}{R}$	$\ln(P) = \frac{2}{3}\left\{\frac{\Delta H}{RT} - \frac{\Delta S}{R}\right\}$

The thermodynamic properties, plateau pressures and temperatures for these hydrides are tabulated in Table 4. The operating curve of the H_2 storage in the hydride bed is shown in Fig. 5.

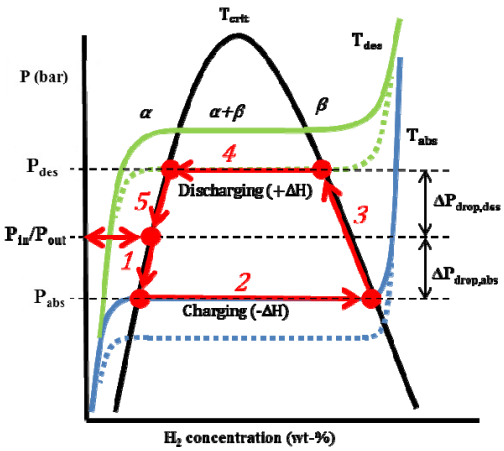

Fig. 5. Operating curve - Metal hydride based H_2 storage unit showing the assumed pressure drop

H_2 is fed into the reactor at an inlet pressure of 25 bar (1). The metal is charged with hydrogen from the α-phase to the β-phase during 12 hours of charging at a temperature of the isotherm corresponding to the equilibrium pressure (2). The heat released during the reaction is transferred to the thermal fluid and released in the steam cycle to produce power. Sensible heat is continuously provided by the thermal fluid from the steam cycle during 12 hours of discharging to increase the temperature in the bed to the discharging temperature (3). The metal hydride is discharged during 12 hours of unloading at a temperature of the isotherm corresponding to the equilibrium pressure. Heat required for the reaction is provided by the thermal fluid heated by flue gases (4). H_2 is released from the reactor at a pressure of 25 bar and fed to the gas turbine combustor (5).

3.3.1 Modeling approach

The hydrogen storage unit has been modeled with a purely thermodynamic approach. Fig 6. shows the ASPEN flowsheet for the H_2 charging mode (exothermic). A heater block H2REAC is used to calculate the sensible heat required to heat the metal hydride bed to the required operating temperature. Heat released during the charging process due to the reaction of the metal with H_2 is added to this sensible heat and transferred to the heater block HEAT1. The thermal fluid is used transfer this heat to the steam system (heat exchanger HET). The equilibrium temperature of the hydride is calculated using the Van't Hoff relation between the equilibrium pressure and temperature. A pressure loss at the H_2 feed side has also been assumed to calculated the equilibrium temperature. The flow rate of the thermal fluid is calculated based on a temperature approach of 10°C between H2REAC and HEAT1. A similar approach is used to calculate the sensible heat required to release H_2 from the hydride discharging. The reaction heat is added to the sensible heat and the total heat required for discharging is obtained from the heat exchange with the hot flue gas from the GT combustor.

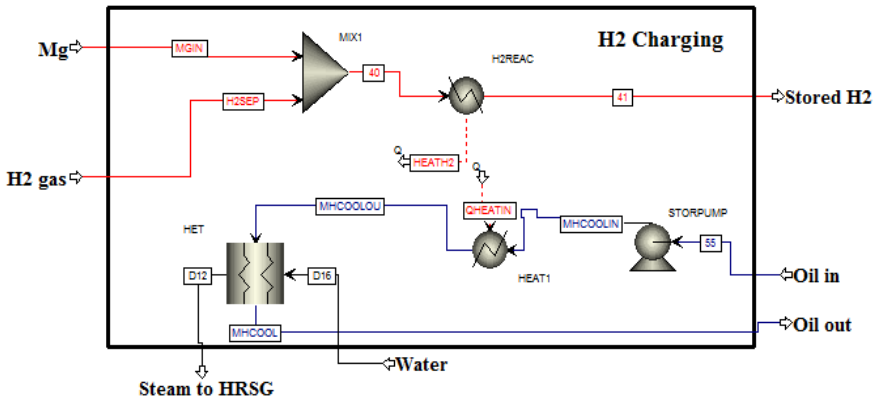

Fig. 6. ASPEN flowsheet – Metal hydride (MgH_2) based H_2 storage unit during Charging

The H_2 rich gas produced from the SEWGS unit consists of a reasonably high amount of moisture (about 25% mol) and low amounts of CO_2 (<1%). There are different methods/technologies to carry out this separation in practical terms, like pressure swing adsorption, cryogenic recovery, Pd based membranes etc. The metal hydrides selected in this work i,e. MgH_2 and Na_3AlH_6 have been selected only based on thermodynamic requirements. Performance of these hydrides in reality is reduced due to presence of moisture and other contaminants. The H_2 purification system was not modeled in this study and a simple separator model was used to separate moisture and CO_2; yielding pure H_2 to be stored. The effect of including a model for H_2 purification on the system performance needs to be further investigated.

4. Results & Discussion

The operating load curve based on the simulations is shown in Fig. 7. and the results obtained from the simulations have been tabulated in Table 5. The operating load curve shows a slight deviation with the assumed load profile. If the power demand during the discharging mode is considered as peak load (100%), it is seen that the base load is somewhat lower (<75%) and the off-peak load during charging is much lower than 50%. This variation from the assumed load profile is due to assumed split percentage (50%) of the H_2 rich gas to the storage unit. In order to achieve off-peak load at exactly half of the base load, this split fraction needs to be optimized. The operating load curve still shows that metal hydride based hydrogen storage could be an option to manage load fluctuations in NGCC plants.

The reference case without any CO_2 capture gives a net plant efficiency (electrical) of about 59.9% which is slightly higher than that mentioned in the EBTF document as pressure losses were not taken into account. It is still a sufficiently accurate basis for the assessment of integrating MH based H_2 storage. The net power output from the system is about 430MW. Process input includes the net power required in HP/MP/LP pumps which amounts to 1.5 MW. In order to make a comparison between the different cases, the total input of natural gas was maintained constant. For the systems with capture and hydrogen storage, additional expanders are used:

(i) Natural gas turbine which is used to expand the inlet NG flow from 70 to 25 bar
(ii) Steam turbine for the purge stream (SEWGS) to expand steam from the HP outlet pressure to 1.1 bar
(iii) Steam turbine for the GHR-ATR steam inlet to expand steam from the HP outlet pressure to 25 bar

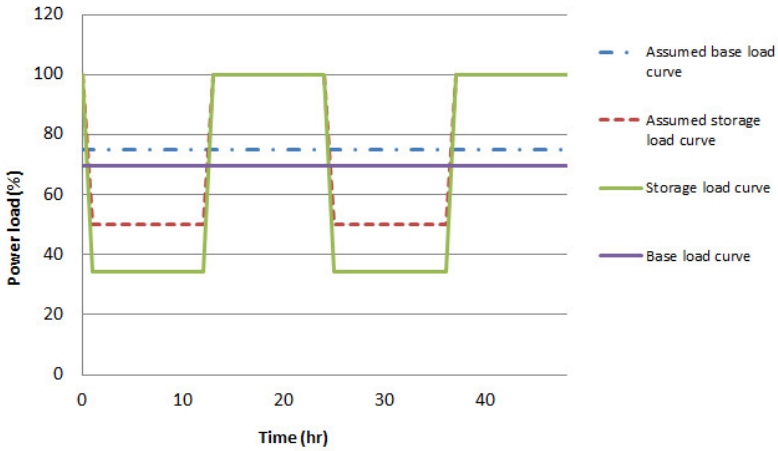

Fig. 7. Operating Load curve with power output during discharging as peak load

The net power output from these expanders has been shown in Table 5. as the net process output; this output remains the same in all cases as the fuel input remains the same. Process input in the systems with capture and H_2 storage is higher than the reference case due to the CO_2 compression, oxygen compression and the ASU power consumption which has been calculated as suggested in the EBTF document.

For the MgH_2 system, a net power output of 176MW is obtained during charging and 501MW during discharging. The gas turbine output is exactly half of the case only with capture during charging while its double during discharging. This allows for an operating strategy where one gas turbine in operated in off-peak hours and two gas turbines in peak-hours, both at full load. The steam turbine output during charging is higher (20MW higher than the expected 50MW) due to the additional HP steam generation by heat integration. During discharging, there is only slight increase in the steam turbine output as compared to the capture case due to the use of the flue gases directly in the thermal fluid heater. Efficiencies of the systems were evaluated based on two definitions: The electrical efficiency (η_{elec}) has been defined considering only electricity as the product

$$\eta_{elec,charging} = \frac{P_{net}}{Q_{in} - Q_{H_2}} \tag{4}$$

$$\eta_{elec,discharging} = \frac{P_{net}}{Q_{in} + Q_{H_2}} \tag{5}$$

An average efficiency (η_{avg}) is also defined as a time based average (12 hours charging and 12 hours discharging):

$$\eta_{avg} = \frac{P_{net,charging} + P_{net,discharging}}{Q_{in} * 2} \tag{6}$$

Table 5. Simulation results

Parameter	Refer -ence Case	NGCC with capture	NGCC with capture and H_2 storage			
			HT (MgH_2) (Charging)	HT (MgH_2) (Discharging)	MT (Na_3AlH_6) (Charging)	MT (Na_3AlH_6) (Discharging)
Input (MW)	719	719	719	719	719	719
Net GT output (MW)	281	281	140	416.5	138.7	411
GT Air Compr. (MW)	275.6	253	126.1	385	128.3	387
ST Output HP (MW)	30.1	34.8	29.8	32.7	19.2	36.4
ST Output MP (MW)	46.48	23.7	17.1	30.7	6.5	36.9
ST Output LP (MW)	74	41.8	24	56.7	30.5	66.6
Net ST output (MW)	150.5	100.3	70.9	119.4	56.2	139.9
Process Input (MW)	1.5	46.7	47.1	47.7	46	46.7
Net Process Output (MW)	-	11.4	11.4	11.4	11.4	11.4
Net Plant Output (MW)	430	346	176	501	160.5	516
Carbon Capture ratio	-	0.952	0.952	0.952	0.952	0.952
Stack Temperature (°C)	81.4	110.1	87	121	66.5	115.5
Net Elec. Efficiency (%)	**59.9**	**48.1**	**45.1**	**47.8**	**41.2**	**49.2**
Average efficiency (%)	**59.9**	**48.1**	**47.0**		**47.0**	

where P_{net}, Q_{in} and Q_{H2} are the net power output, input and the heat content in the stored/released H_2 stream respectively. Q_{H2} remains the same (about 328MW) in both charging and discharging modes for both the metal hydrides. The carbon capture ratio (CCR) is evaluated across the SEWGS unit and is defined as:

$$CCR = \frac{(CO + CO_2)_{in} - (CO + CO_2)_{out}}{(CO + CO_2)_{in}} \tag{7}$$

The system with only CO_2 capture but no H_2 storage gives a net electrical efficiency of 48.1% which is much lower than that reported in literature [7]. The carbon capture ratio (CCR) is 0.952. Loss in efficiency is particularly due to the use of an O_2 blown GHR-ATR with additional power consumption in the ASU and O_2 compressor. With introduction of H_2 storage using a high temperature metal hydride (MgH_2) it is seen that the electrical efficiency as defined in Eqn 4 and Eqn 5. is about 45% during charging and 48% during discharging. With a medium temperature hydride (Na_3AlH_6) it can be seen that a slightly higher electrical efficiency is achieved during discharging but a lower efficiency during charging. The difference in the efficiency values during charging and discharging can be attributed to the heat/power demand in the GHR-ATR, SEWGS and the CO_2 unit. The heat/power demand in the GHR-ATR, SEWGS and CO_2 unit remains the same during charging and discharging due to a constant fuel input. In order to fulfill this heat/power demand, a lower net power output is achieved in the charging case in spite the additional steam generation by the thermal fluid cooler. During discharging, additional hydrogen is fed in to the gas turbine cycle which leads to higher power output. The additional power output delivered, even with the heat transfer to the thermal oil heater leads to a higher electrical efficiency during discharging. A difference is also observed in efficiencies in the charging/discharging mode between the MgH_2 and Na_3AlH_6 systems due to the difference in reaction enthalpies ΔH between the hydrides (See Table 4.).

The system delivers two products – electrical power and H_2. Hence analyzing the system only with an electrical efficiency is not appropriate. The system has been also analyzed with a time based (for 1 day) average efficiency (Eqn 6). From Table 5. it can be seen that both the MgH_2 and Na_3AlH_6 system give an average efficiency of about 47.0% which is very comparable to the

system with only CO_2 capture and no H_2 storage. Hence from an efficiency point of view not much difference could be seen with the usage of a high temperature hydride or a medium temperature hydride.

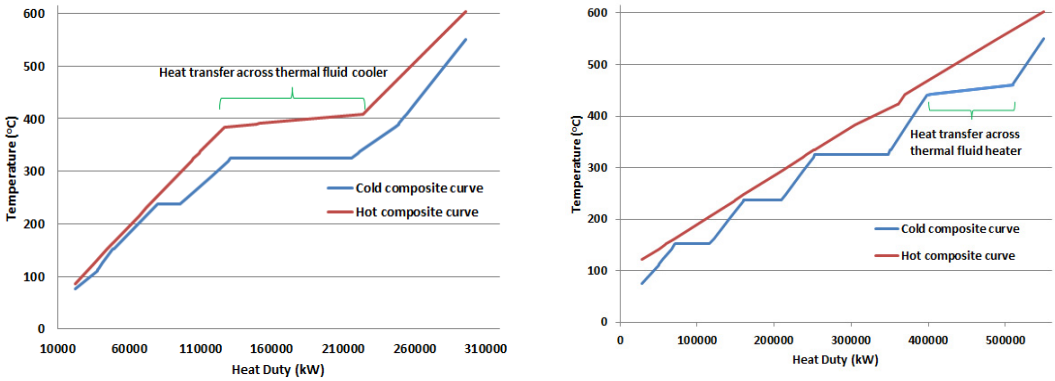

a b

Fig. 8. Q-T diagram a) MgH_2 Charging showing HP steam generation; b) MgH_2 Discharging showing the utilization of flue gases

Fig 8a, shows the q-T diagram with composite curves for the HRSG and the thermal fluid cooler during the charging mode in the high temperature MgH_2 system. As aforementioned the heat released during charging mode is utilized to generate HP steam. The fig. shows that in order to achieve the desired pinch in the HP/MP/LP evaporators of the HRSG, there is reduction in the amount of MP and almost no production of LP steam. This becomes a major constraint in the system operating with a high temperature hydride. Also it can be seen that another constraint i,e an elongated pinch region is obtained in the economizer section of the HRSG where water is heated to the saturation temperature. The elongated pinch will result in a larger length of tubes in the heat exchanger which is not desirable. Fig 8b shows the composite curves for the discharging mode in the MgH_2 system. As the flue gases have been utilized to provide the required reaction heat, the diagram gives a clear indication of the different pinch achieved in the evaporators and the thermal fluid heater.

Fig 9a, shows composite curves for the HRSG and the thermal fluid cooler during the charging mode in the medium temperature Na_3AlH_6 system. As it can be seen, contrary to the high temperature MgH_2 system, the economizer pinch region is small and thus this becomes a more practical system. Fig 9b shows the composite curves for the discharging mode in the Na_3AlH_6 system. A much higher pinch can be seen for the HP evaporator due to the fact that the flue gases at high temperature (TOT) have been directly used to provide the required heat to the thermal fluid at a relatively low temperature.

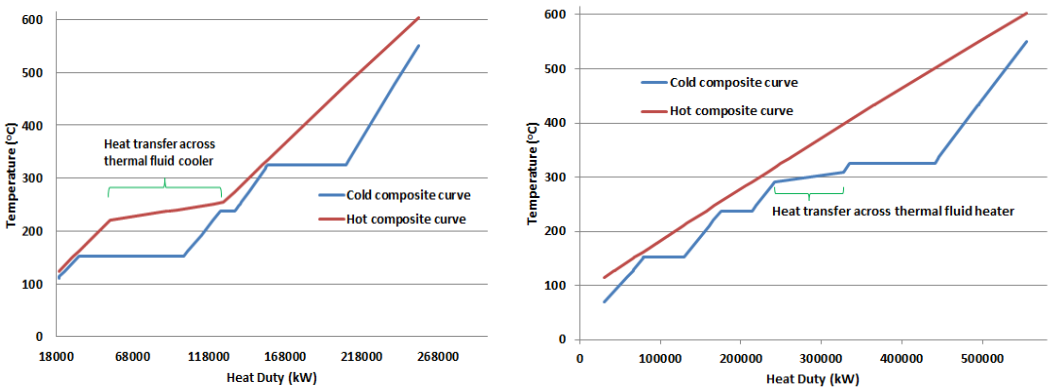

a b

Fig. 9. Q-T diagram a) Na_3AlH_6 Charging showing LP steam generation; b) Na_3AlH_6 Discharging showing reduction in HP steam generation

5. Conclusions

A thermodynamic system study has been presented for a NGCC system with precombustion CO_2 capture and metal hydride based H_2 storage. The study has been performed with three ASPEN Plus steady state system models - a reference case NGCC

without capture and H_2 storage, a NGCC system model with pre-combustion capture utilizing a gas heated reformer-auto thermal reformer (GHR-ATR) and SEWGS and lastly a NGCC system with both capture and metal hydride based H_2 storage. Separate models have been developed for the charging and discharging modes for the metal hydride. Results have been presented for both a high temperature hydride (MgH_2) and a medium temperature hydride (Na_3AlH_6). The reference case NGCC model gives a net plant efficiency (electrical) of about 60%. A net plant efficiency of about 48 % was achieved for the system with CO_2 capture showing the reduced thermodynamic performance. Addition of H_2 storage in this system shows that such plants can be still operated at comparable time based average efficiency of about 47% with an appropriate heat integration in the system. Heat released during charging is utilized to generate HP steam for the high temperature MgH_2 system and LP steam for medium temperature Na_3AlH_6 system while flue gases from the gas turbine outlet is utilized to provide heat for the discharging mode in both systems. Operating the metal hydride at different temperatures does not reflect reduction in efficiency but has significant implications on the steam production in the HRSG. A lower equilibrium temperature for the metal hydride seems more beneficial particularly for the economiser in the HRSG. Inspite of additional steam generation during H_2 storage, a reasonably good operating load curve is obtained based on the simulation results and it is concluded that such systems could be used to manage load fluctuations in NGCC plants with pre-combustion CO_2 capture. Investigations are required further in the detailed design of a heat integrated system capable of operating in both modes of operation, resistance of metal hydrides against moisture, CO_2 etc. and lastly an economic assessment based on the heat and mass balances developed in this study.

Acknowledgements

The authors would like to greatly acknowledge Jan Wilco Dijkstra for his extensive inputs and Dr. Wim Haije from ECN for his support in carrying out this work. The authors also would like to thank the CATO-2B project consortium for financial support. CATO (CO_2 capture, transport and storage) is a private-public partnership of 40 Dutch companies, government, environmental and research organizations.

References

[1] Sastri MVC, Viswanathan B, Srinivasa Murthy S. Metal Hydrides. Narosa Publishing House New Delhi; 1998
[2] http://www.tennet.eu/nl/home.html Accessed on 12th August 2014
[3] EU "The EU climate and energy package" http://ec.europa.eu/clima/policies/package/index_en.htm Accessed on 10th September 2013
[4] Dowtherm A Heat Transfer fluid, Product Technical Data, The Dow Chemical Company. http://www.dow.com/heattrans
[5] Van Selow, E. and Cobden, P. and Van den Brink, R.W. and Hufton, J.R. and Wright, A. 2008. Performance of sorption-enhanced water-gas shift as a pre-combustion CO_2 capture technology Energy Procedia 1: 689-696
[6] Reijers, R. and Van Selow, E. and Cobden, P. and Boon, J. and Van den Brink, R. 2011. SEWGS process cycle optimization Energy Procedia 4: 1155-1161
[7] M. Gazzani, E. Macchi, G. Manzolini, CO_2 capture in natural gas combined cycle with SEWGS . Part A: Thermodynamic performances, International journal of greenhouse gas control (2013) 493-501
[8] Bolland, O. and Booth, N. and Franco, F. and Macchi, E. and Manzolini, G. and Naqvi, R. and Zara, M.A. 2009. Common Framework Definition Document. WP 1.4- WP European Benchmarking Task Force
[9] Abbott, et al., 2008. Production of hydrocarbons by steam reforming and Fisher–Tropsch reaction. US 7,323,497 B2 USA, January 29
[10]Optimised hydrogen production by steam reforming:Part 2, report, K.V Patwardhan, Sankarjayalakshmi and P Balaramakrishna, Larsen & Toubro
[11]http://www.topsoe.com/business_areas/synthesis_gas/~/media/PDF%20files/Heat_exchange_reforming/Topsoe_synthesis_gas_technology.ashx. TOPSOE synthesis gas technology report
[12] G. Lozza, P. Chiesa, Natural gas decarbonization to reduce CO_2 emission from combined cycles. Part A. Partial oxidation. J. Eng. Gas Turb. Power 124 (2002) 82-88
[13] M. Gazzani, E. Macchi, G. Manzolini, CO_2 capture in integrated gasification combined cycle with SEWGS - Part A: Thermodynamic performances, Fuel 105 (2013) 206-219
[14] Caian Qiu, Susanne M. Opalka, Gregory B. Olson, Donald L. Anton, Thermodynamic modeling of the sodium alanates and the Na-Al-H system, International journal of materials research (2006) 97-11
[15] R.J. Westerwaal, W.G. Haije, Evaluation solid-state hydrogen storage systems, ECN Hydrogen and Clean Fossil Fuels, 2008