Alexandria Engineering Journal (2016) 55, 351–356

HOSTED BY

Alexandria University

Alexandria Engineering Journal

www.elsevier.com/locate/aej
www.sciencedirect.com

SHORT COMMUNICATION

A comprehensive study on the emission characteristics of E-diesel dual-fuel engine

A. Avinash, P. Sasikumar *

KPR Institute of Engineering and Technology, Arasur, Coimbatore 641 407, Tamil Nadu, India

Received 10 July 2015; revised 21 August 2015; accepted 27 October 2015
Available online 17 November 2015

KEYWORDS

E-diesel fuel;
Premixed combustion;
Emission characteristics

Abstract Each year, the ultimate goal of emission legislation is to force technology to the point where a practically viable zero emission vehicle becomes a reality. Albeit the direction to reach this target is a formidable challenge, homogeneous charge compression ignition (HCCI) is a new combustion concept to produce ultra low nitrogen oxides (NO_x) and smoke emissions. By the way, an endeavor has been made in this work to achieve a simultaneous reduction in both NO_x and smoke levels in a direct injection compression ignition engine converted to operate on premixed charge compression ignition mode. Indeed, these promises were made possible in this work by preparing premixed fuel–air mixture outside the engine cylinder. For this purpose, ethanol was injected in the intake port at various premixed ratios (5%, 10%, 15%, 20%, 25% and 30%) and conventional diesel was injected as usual. It was extrapolated from the experimental results that e-diesel operation can significantly reduce NO_x and smoke levels. In addition, NO_x and smoke levels reduced in this experimental study with increase in premixed fraction. Nevertheless, unburned hydrocarbons (UBHC) and carbon monoxide (CO) emissions exhibited reverse trend with increase in premixed fraction and the maximum value of HC and CO emission levels was noted with 30% premixed fraction.

1. Introduction

Since their introduction, internal combustion engines play a vital role in modern road transport. However, in recent decades, serious concerns have been raised with regard to the environmental impact of emissions arising from these engines. Also, in recent days, indiscriminate extraction and lavish consumption of fossil fuels have led to fast depletion of easily accessible underground-based carbon resources. As a result, stringent emission norms have been introduced by governments around the world [1,2]. Therefore, the present energy scenario has stimulated active research on non-petroleum, renewable and less polluting fuels [3]. In the above perspective, HCCI is a fuel flexible combustion technology which may prove to be a stepping-stone to a zero emission vehicle. To proceed further, this alternative combustion (HCCI) is known under a variety of names such as compression ignited homogenous charge (CIHC), premixed lean diesel combustion (PREDIC), and premixed charge compression ignition (PCCI), [4]. However, all these names reveal two fundamental

* Corresponding author.
E-mail address: sasi_me75@yahoo.com (P. Sasikumar).
Peer review under responsibility of Faculty of Engineering, Alexandria University.

http://dx.doi.org/10.1016/j.aej.2015.10.002
1110-0168

characteristics such as preparation of premixed fuel–air mixture and auto ignition of the premixed charge.

In fact, PCCI combustion is a new combustion concept to tackle the problem of relatively high emission levels; especially NO_x and soot emissions of conventional direct injection diesel engines [5,6]. In PCCI combustion, the improved fuel–air mixing before ignition by means of early injection timing significantly lowers the maximum in-cylinder temperatures during the entire engine cycle [7]. Besides this moderately early injection timing is adopted with the intention of improving combustion phase controllability. Nevertheless, PCCI combustion faces several technical barriers such as mixture preparation and high UBHC and CO emissions [8,9]. The increasing UBHC and CO emissions can be reduced either by using direct oxidation catalysts or the influence of a second fuel injection timing as reported by Qiang Fang et al. [10] and Ali Turkcan et al. [11].

Pioneering research by Gray and Ryan [12] in a port fuel injected diesel engine exposed remarkable reduction in NO_x emissions, with levels being a factor of 100 lower than those of conventional diesel combustion. In addition, smoke levels were also reduced to near zero level. Further studies by Christensen et al. [13] on multi-fuel capability of HCCI engine with variable compression ratio revealed improved combustion quality and stable operation with very low levels of NO_x emissions at optimum operating conditions. Stefan Simescu et al. [14] investigated the PCCI-DI combustion in a heavy-duty truck engine. In their study, air assisted port fuel injector was used to inject well atomized diesel fuel in the intake manifold while a standard electronic fuel injector was used for fuel injection near top dead center. Based on the experimental results, it was observed that smoke emissions showed a marginal increase in the amount of port fuel injection. On the contrary, both CO and UBHC increased with port fuel injection. Also, experimental investigation by Cinar et al. [15] on the effects of pre-mixed ratio of diethyl ether on the combustion and exhaust mechanism of a single-cylinder direct injection diesel engine disclosed that the NO_x and soot emissions decreased significantly. Thus, momentous reductions in NOx and soot emissions from HCCI engine using pre-mixed fuels were confirmed. Additionally, several studies have been performed on HCCI combustion with different fuels, from conventional diesel and gasoline to various bio-fuels and their mixtures such as bio-diesel, ethanol and bio-ethanol [16–18].

Over the last decade, numerous research works have been conducted all over the world using ethanol and bio-ethanol diesel blends in diesel engines [19–22]. However, bio-ethanol has very limited solubility in diesel fuel and the solubility of the bio-ethanol and diesel mixture depends on the water content of the blends, hydrocarbon composition of the diesel fuel and environmental temperature [23]. Therefore, the use of ethanol–diesel blends has been widely studied and the primary intention of such study is to reduce NOx and particulate matter emissions. Since both the emissions (NOx and particulate matter) have direct health threat and NO_x in particular is an important precursor of tropospheric ozone, the present investigation is aimed to reduce NOx and smoke levels in a dual-fuel (port injection of ethanol and direct injection of diesel) single cylinder compression ignition engine converted to operate in premixed charge mode.

2. Experimental setup and test procedure

A single cylinder direct injection diesel engine was converted to operate in the dual-fuel mode with port fuel injection of ethanol and direct injection of conventional diesel fuel. The specifications of the research engine are listed in Table 1. Fuel properties are compared in Table 2 and the test engine setup with premixed fuel injection system is shown in Fig. 1. In a nutshell, the experimental apparatus composed of a single cylinder direct injection diesel engine, ethanol port fuel injection system with fuel pump, exhaust gas analyzer and smoke meter. In this work, the port fuel injection of ethanol was precisely monitored by means of an electronic control unit and the quantity of ethanol to be injected was calculated based on energy basis using Eq. (1).

$$r_p = \frac{m_e h_e}{m_e h_e + m_d h_d} \tag{1}$$

where r_p is the premixed ratio, m_e is the mass of ethanol, m_d is the mass of diesel, h_e is the lower heating value of ethanol and h_d is the lower heating value of diesel fuel. Therefore, the premixed ratio (r_p) 1.0 is equivalent to homogeneous ethanol combustion conditions and $r_p = 0$ corresponds to conventional diesel combustion conditions.

The desired quantity of ethanol is injected at 4.5° crank angle before TDC. Furthermore, the present investigation was carried out by varying premixed ratios from 5% to 30% with increase of 5%, and the maximum premixed ratio in this work had been limited to 30% since the quantity ethanol to be injected increases approximately twice owing to the lower heating value of ethanol. Secondly, in order to minimize wall wetting issues with ethanol injection, the quantity of ethanol fuel injected was restricted to 30% of premixed fraction. On the whole, the influence of e-diesel dual-fuel on emission characteristics was experimentally investigated and discussed in-detail in this work.

3. Uncertainties in emission measurements

Generally, uncertainty analysis is desirable to prove the accuracy of the experiments. In this research, the percentage of

Table 1 Test engine specifications.

Make	Kirloskar TAF1
Type	Four stroke, single cylinder vertical air cooled diesel engine
Rated power	4.4 kW
Rated speed	1500 rpm
Bore	87.5 mm
Stroke	110 mm
Compression ratio	17.5:1
Orifice diameter	13.6 mm
Coefficient of discharge	0.6
Port fuel injection	4.5° BTDC
Port fuel injection pressure	3.5 bar

Table 2 Comparison of fuel properties.

Properties	Ethanol	Diesel
Density (kg/m^3) at 15 °C	789	840
Kinematic viscosity (cSt) at 40 °C	1.2	3.2
Heating value (kJ/kg)	26,000	42,500
Heat of evaporation (kJ/kg)	840	290
Cetane number	6	51
Carbon content (mass %)	52.2	87.4
Hydrogen content (mass %)	13	13.4
Oxygen content (mass %)	34.8	–
Sulfur content (mg/kg)	< 50	–

uncertainty of measured values of emission parameters such as NO_x, smoke intensity, HC, CO and exhaust gas temperature is listed in Table 3. Also, the uncertainties in the measurements of NO_x, smoke intensity, UBHC and CO emissions are given below:

NO_x	± 6 ppm in the range of 0–300 ppm
Smoke intensity	± 1.1 BSU in the range of 0–3 BSU
UBHC	± 7 ppm in the range of 0–20 ppm
CO	± 0.16% vol in the range of 0–2% vol

Table 3 Percentage of uncertainty for various emission parameters.

Parameters	Uncertainty (%)
NO_x	2
HC	2.8
CO	0.08
Smoke	2.2
Exhaust gas temperature	1.2

4. Results and discussion

4.1. Oxides of nitrogen emissions

The variation of brake specific oxides of nitrogen emission (in g/kW h) with respect to load (%) for various premixed ratios is shown in Fig. 2. The concept of premixing fuel and air in the intake port has brought down mixture temperature and this pre-cooling effect might be the reason for reduction of in-cylinder combustion temperatures. Besides, improved homogeneity due to premixing ensured that more air is now utilized by the fuel. In fact, this factor might have paved way to bring down the oxides of nitrogen level for premixed fuel–air mixtures.

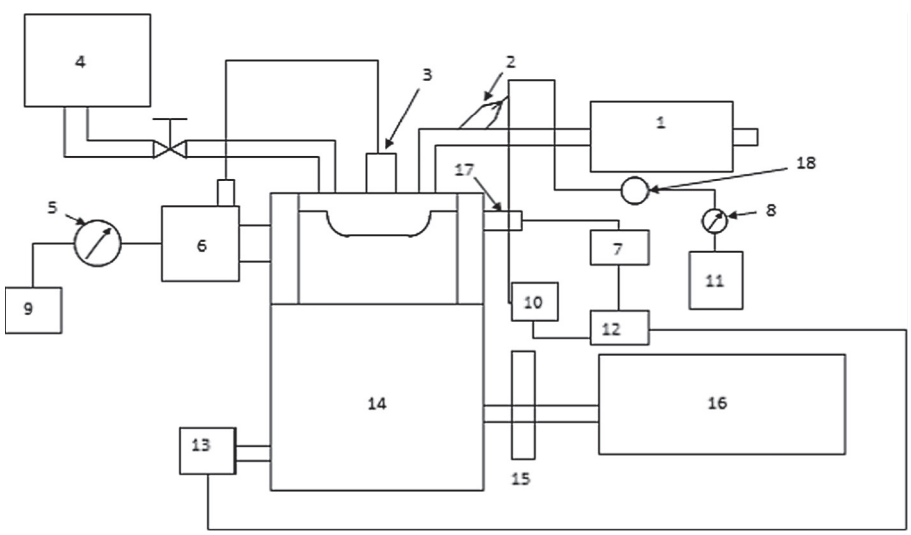

1-Air surge tank	10- Relay controller
2-Auxillary fuel injector	11-Port fuel tank
3-Main fuel injector	12-Data acquisition
4-Exhaust gas analyzer	13-Crank angle encoder
5-Flow meter	14-Engine
6-Fuel injector pump	15-Flywheel
7-Charge amplifier	16-Dynamometer
8-Flow meter	17-Pressure Transducer
9-Main fuel tank	18-Fuel control valve

Figure 1 Experimental setup.

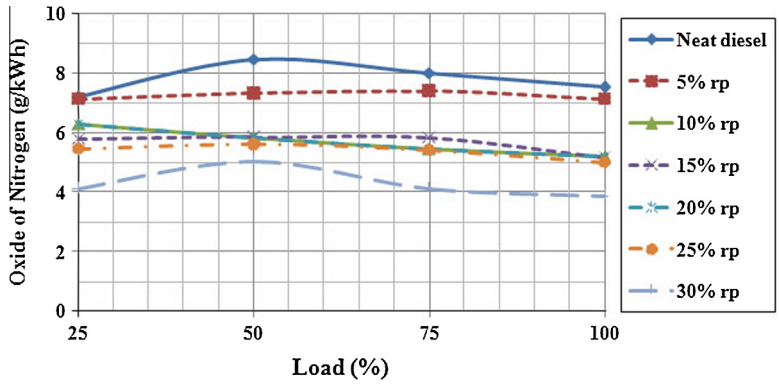

Figure 2 Variation of brake specific oxides of nitrogen with load.

It was also noted from the experimental observations that the oxides of nitrogen reduction range are about 43% at 25% load to about 48% at full load for 30% premixed fraction when compared to base diesel. As seen from Fig. 2, the oxides of nitrogen emission values at full load (100%) are lower for all premixed ratios when compared to neat diesel. This trend apparently discloses the cooling effect of ethanol addition on in-cylinder gas temperature of premixed charge compression ignition.

4.2. Smoke intensity

The effect of various premixed ratios on the smoke intensity of e-diesel dual-engine engine is shown in Fig. 3. In this work, smoke intensity decreased significantly with the premixed fuel–air mode up to 20% premixed charge as compared to base diesel. One possible reason for this reduction might be near homogeneous mixture preparation and the other possible reason might be the increase in ignition lag due to high latent heat of ethanol. Furthermore, smoke levels at 25% premixed charge were much closer to conventional diesel. However, it increased for 30% premixed charge. The primary reason for the trend might be the poor mixing of air with relatively more quantity of fuel and also a change in the start of combustion as the premixed charge undergoes combustion earlier.

4.3. Hydrocarbons and carbon monoxides emissions

Variation of unburned hydrocarbons with respect to load for various premixed ratios is shown in Fig. 4. In this work, unburned hydrocarbons increased with increase in premixed fractions due to reduction in excess air with increasing premix fractions. The peak value of unburned hydrocarbons was noted for 30% premixed ratio. Moreover, unburned hydrocarbons were much higher at lower loads (especially at 25% load) due to over-leaning of the mixture, which could not have sustained the combustion as it is beyond the flammability limit. Therefore, premixed charge at lower loads might have undergone poor combustion. Nevertheless, at higher loads, the higher temperature inside the combustion chamber might have contributed to better combustion during premixed charge mode. Overall, unburned hydrocarbon from premixed charge operation is still higher than base diesel operation.

The similar trend noted with unburned hydrocarbons at low loads was evidently seen for carbon monoxide emission as shown in Fig. 5. However, the trend reversed at higher loads due to the presence of oxygen in ethanol and higher in-cylinder temperature at higher loads. But there was an increase in carbon monoxide emission with increase in premix fraction. This increase can be explained by the high latent heat of ethanol and another possible reason might be the effect of longer ignition delay due to ethanol addition.

4.4. Exhaust gas temperature

The variation of exhaust gas temperature with respect to load for various premixed fractions of ethanol is shown in Fig. 6. The exhaust gas temperature increased with increase in engine load and it decreased with increase in ethanol fraction. The

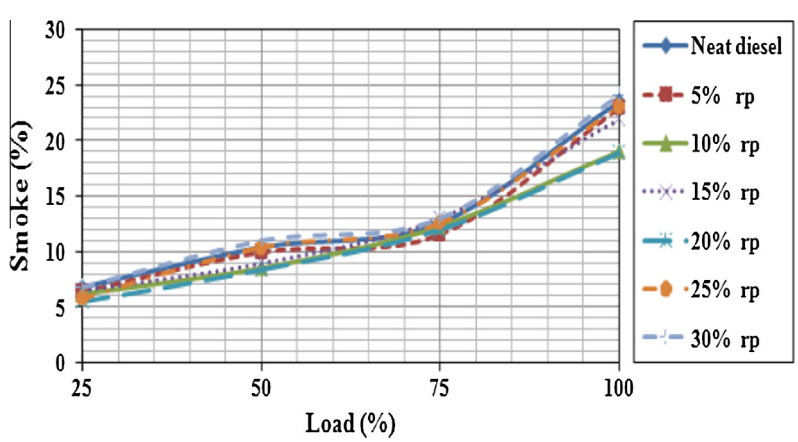

Figure 3 Variation of smoke intensity with load.

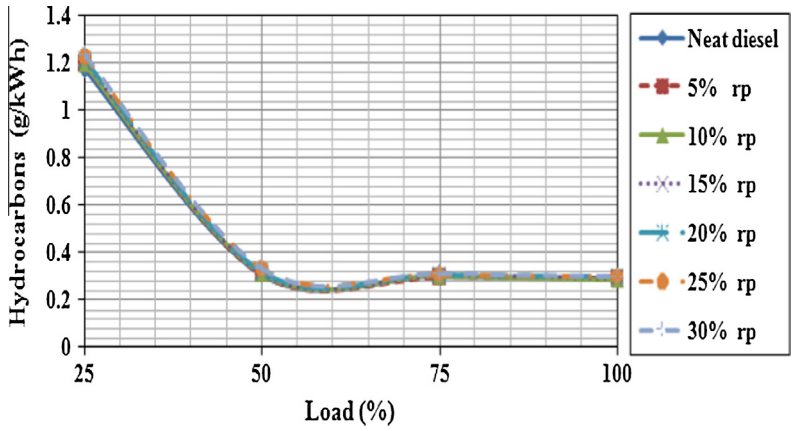

Figure 4 Variation of brake specific hydrocarbons with load.

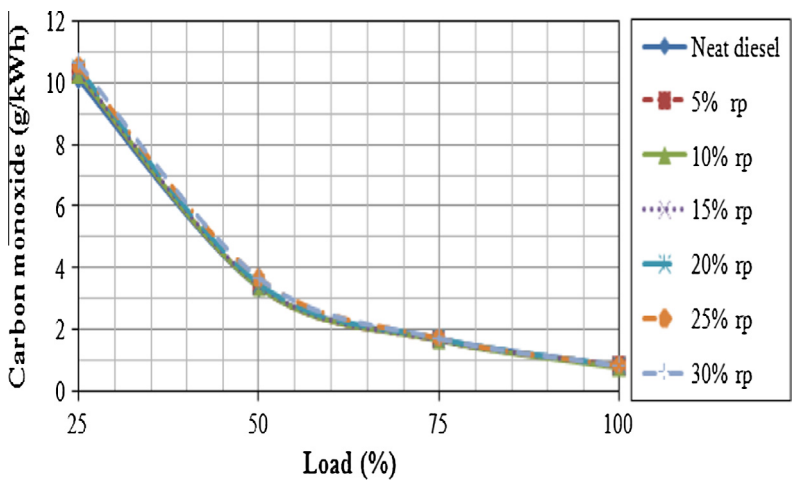

Figure 5 Variation of brake specific carbon monoxide with load.

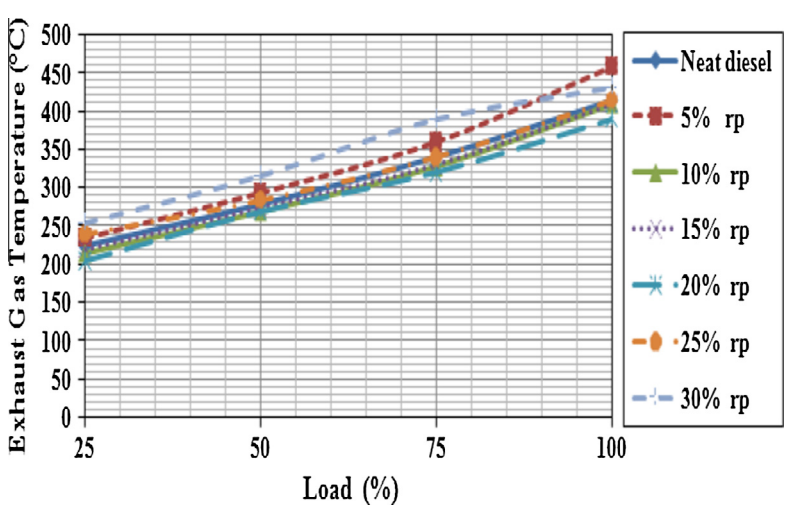

Figure 6 Variation of exhaust gas temperature with load.

reason for increase in exhaust gas temperature with load is the increase in in-cylinder temperature with engine load. On the other hand, the decrease in exhaust gas temperature with premixed ratio is the reduction in peak combustion temperature due to ethanol substitution. In this work, it was clearly witnessed that there is a substantial reduction in exhaust gas temperature particularly with 20% premixed fraction of ethanol.

5. Conclusions

The following conclusions are drawn from the experimental results conducted in a modified single cylinder diesel engine operated on partial premixed charge compression ignition mode.

1. There was a noteworthy reduction in oxides of nitrogen emission with increase in premixed fraction of ethanol. Nearly 48% of oxides of nitrogen reduced for 30% premixed fraction compared to base diesel at full load.
2. Smoke intensity of premixed fuel–air mode decreased significantly up to 20% premixed charge as compared to base diesel. Furthermore, smoke levels at 25% premixed charge were much closer to conventional diesel. However, it increased for 30% premixed charge.
3. The effect of premixing demonstrated negative results with unburned hydrocarbons and carbon monoxide emissions. In this study, with increase in premixed fraction of ethanol, unburned hydrocarbons and carbon monoxide emissions increased, and the peak value of these emissions was noted for 30% premix fraction.
4. In this work, the exhaust gas temperature also decreased significantly up to 20% premixed charge operation. Additionally, the temperature values were much closer at 25% premixed charge and increased above 25% premix fraction.
5. On the whole, this work proves to fundamental research to envisage zero emission vehicles. Nevertheless, future efforts should be taken to substantially reduce unburned hydrocarbons and carbon monoxide levels along with nitrogen oxides and smoke intensity by incorporating cost effective after treatment methods, multiple injection strategies and use of fuels with different reactivity in a premixed charge compression ignition engine.

References

[1] J.B. Heywood, Internal Combustion Engine Fundamentals, 1989, ISBN 0-07-100499-8.
[2] R.R. Akarte, An overview of energy and issues of future, in: First National Conference on Energy and Fuel Issues of Future, PIET, Pune, 2004, pp. 150–160.
[3] Keshav Bhattarai, Wayne M. Stalick, Scott Mckay, Gija Geme, Nimisha Bhattarai, Biofuel: an alternative to fossil fuel for alleviating world energy and economic crises, J. Environ. Sci. Health, Part A: Toxic/Hazard. Substances Environ. Eng. 46 (2011) 1424–1442.
[4] Hua Zhao, HCCI and CAI Engines for the Automotive Industry, Wood Head Publishing Limited, CRC Press, 2007.
[5] A.J. Torregrosa, A. Broatch, A. García, L.F. Mónico, Sensitivity of combustion noise and NOx and soot emissions to pilot injection in PCCI diesel engines, Appl. Energy 104 (2013) 149–157.
[6] M.K. Gajendra babu, K.A. Subramniam, Alternative Transportation Fuels: Utilisation in Combustion Engines (2013), ISSN: 13: 978-1-4398-7282-6.
[7] Ulas Egüz, Niels Leermakers, Bart Somers, Philip de Goey, Modeling of PCCI combustion with FGM tabulated chemistry, Fuel 118 (2014) 91–99.
[8] Ming Jia, Maozhao Xie, Tianyou Wang, Zhijun Peng, The effect of injection timing and intake valve close timing on performance and emissions of diesel PCCI engine with a full engine cycle CFD simulation, Appl. Energy 88 (2011) 2967–2975.
[9] Kihyun Kim, Donghoon Kim, Yongjin Jung, Choongsik Bae, Spray and combustion characteristics of gasoline and diesel in a direct injection compression ignition engine, Fuel 109 (2013) 616–626.
[10] Qiang Fang, Junhua Fang, Jian Zhuang, Zhen Huang, Influences of pilot injection and exhaust gas recirculation (EGR) on combustion and emissions in a HCCI-DI combustion engine, Appl. Therm. Eng. 48 (2012) 97–104.
[11] Ali Turkcan, Ahmet Necati Ozsezen, Mustafa Canakci, Effects of second injection timing on combustion characteristics of a two stage direct injection gasoline–alcohol HCCI engine, Fuel 111 (2013) 30–39.
[12] A.W. Gray III, T.W. Ryan III, Homogeneous Charge Compression Ignition of Diesel Fuel, SAE Paper 971676, 1997.
[13] M. Christensen, A. Hultqvist, B. Johansson, Demonstrating Multi Fuel Capability of a Homogeneous Charge Compression Ignition Engine with Variable Compression Ratio, SAE Paper No 1999-01-3679, 1999.
[14] Stefan Simescu, S.B. Fiveland, L.G. Dodge, An Experimental Investigation of PCCI-DI Combustion and Emissions in a Heavy-Duty Diesel Engine, SAE Paper No. 2003-01-0345, 2003.
[15] Can Cinar, Özer Can, Fatih Sahin, H. Serdar Yucesu, Effects of premixed diethyl ether (DEE) on combustion and exhaust emissions in a HCCI-DI diesel engine, Appl. Therm. Eng. 30 (2010) 360–365.
[16] L. Zhu, C.S. Cheung, W.G. Zhang, Z. Huang, Combustion, performance and emission characteristics of a DI diesel engine fueled with ethanol–biodiesel blends, Fuel 90 (2011) 1743–1750.
[17] M. Lapuerta, O. Armas, J.M. Herreros, Emissions from a diesel–bioethanol blend in an automotive diesel engine, Fuel 87 (2008) 25–31.
[18] Ezio Mancaruso, Bianca Maria Vaglieco, Spectroscopic analysis of the phases of premixed combustion in a compression ignition engine fuelled with diesel and ethanol, Appl. Energy 143 (2015) 164–175.
[19] M. Himabindu, G. Sathyanarayanan, S. Thomson, N. Mahalakshmi, Effect of Premixed Charge of Ethanol and Exhaust Gas Recirculation on the Performance and Emission Characteristics in an Ethanol–Diesel Fueled HCDC Engine – An Experimental Investigation, SAE Technical Paper 2008-01-2609, 2008, http://dx.doi.org/10.4271/2008-01-2609.
[20] D.C. Rakopoulos, C.D. Rakopoulos, E.C. Kakaras, E.G. Giakoumis, Effects of ethanol diesel blends on the performance and exhaust emissions of a heavy duty DI diesel engine, Energy Convers. Manage. 49 (2008) 31553–31662.
[21] Dulari Hansdah, S. Murugan, L.M. Das, Experimental studies on a DI diesel engine fueled with bioethanol–diesel emulsions, Alexandria Eng. J. 52 (2013) 267–276.
[22] S. Saravanan, K. Pitchandi, G. Suresh, An experimental study on premixed charge compression ignition-direct ignition engine fueled with ethanol and gasohol, Alexandria Eng. J. (2015).
[23] D.G. Li, Z. Huang, X.C. Lu, W.G. Zhang, J.G. Yang, Physico-chemical properties of ethanol–diesel blend fuel and its effect on performance and emissions of diesel engines, Renew Energy 30 (2005) 967–976.