Available online at www.sciencedirect.com
ScienceDirect
Procedia Computer Science 52 (2015) 1166 – 1170
Procedia Computer Science

The 2nd International Workshop on Learning and Data Mining for Sensor Networks (MLDM-SN 2015)

Embedded Transient Shock Signal Storage Test Technique under High Overload

Zhang Yi*, Zhang Rong, Zhou Jikun, Chen Ying

Institute of Systems Engineering.CAEP, Mianyang, Sichuan, China, Box919-402,621900

Abstract

To avoid the interference causing by testing cables of acceleration sensors and acquire the dynamic impact load acceleration data conveniently and reliably in the environmental test as the penetrating or drop test, the embedded transient shock signal measurement system is designed adopting the storage measurement technique integrating the accelerometer, signal conditioning circuits, data sampling and storage circuit, communication interface circuit, and a power source. It is of small size, low power consumption, capable of working under high impact acceleration and good engineering practicability validated by a drop test. Based on fully integrated mixed-signal system-on-chip MCU C8051F340 with full speed USB flash, the system has 100 KHz sampling frequency, 5 second sampling length, 100000g measuring range, which can resist at least high overload of 60000g through the static and dynamic calibration device. In this paper, the operation principle, the circuits of central modules, the Labview software design interface, the static and dynamic encapsulating technology and calibration method are simply introduced. The design has some referenced value for me.

Peer-review under responsibility of the Conference Program Chairs

Keywords: Embedded system; Storage measurement technique; Drop test; Shock signal recorder; System on chip

1. Introduction

When the tester is suspended, loaded, transported, to assess the ability and safety for resisting the high shock is the aim of drop test. The tester is posed by pre-establish altitude and is dropped to target holding fixed angle by a guide rigging to control the dropped pose. The process of dropping to target is a transient high shock process which pulse width usually exceeds 1ms.

The lots of long leads are used in traditional outer wiring method to measure the dynamic parameters, which

* Corresponding author：Zhang Yi. Tel.:+86-08162484436; fax: +86-0816-2281120
E-mail address: 810185510@qq.com

Peer-review under responsibility of the Conference Program Chairs
doi:10.1016/j.procs.2015.05.152

connect the sensors and instrumentation. Because the leads are dropped together with the tester, the experimental signals are easily interfered by shaking wires and the pulling wires will affect the dropped pose, further more the leads are apt to be broken to lost signals. To acquire conveniently and reliably the dynamic impact load acceleration signal, the embedded load storage measurement technique has been designed and developed, that is integrating the sensor, signal acquisition, signal adaption, datum storage into a small data recorder, which is installed inside the tester to do some environmental tests under high impact load and shock as the penetrating or drop test, and is reclaimed to read and reappear the data of impact load acceleration signals by computer after the test. The researches have begun at the end of 1970s, more reports have been found in the 80s, and a single channel accelerator recorder with 40000g range and 15 KHz sampling frequency has been studied by America SNL laboratory in the 90s. The domestic researches have begun from 1983, some successful examples have been presented by HUABEI science and Engineering University from 80s to 90s, more new productions have been investigated lately by other universities and units, and high reliability and miniaturization become the new direction going with the development of electron technique, but there are no products satisfying the drop test's demand [1-3].

2. The design keys

In this paper, the overload acceleration signal can be recorded perfectly by a system based on fully integrated mixed-signal system-on-chip MCU C8051F340 with full speed USB flash. It has a good deal of merits, such as reliability under the high impact load condition, small bulk, built-in dry battery, high integration and speed, low power consumption, and low cost.

2.1. The frame of system

The schematic diagram of system is shown in Fig. 1, and the operation principle as follows. After the impact signal was changed to charge signal by accelerator, the charge signal is changed to voltage by adapting circuits, then the digital signal will be converted by ADC and exported into memories.

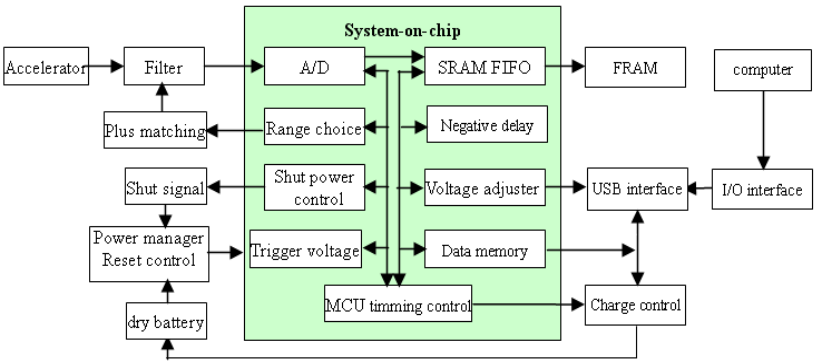

Fig. 1. Schematic diagram of system.

In datum management, the logic and timing control module is used to offer clock-time scheduling for ADC, data read-write, address generator, storage and so forth. The paralleling interface technique is adopted to improve the storage speed, and the circular data write technique is used to achieve the identifying of invalid block and management of space fragment and the CRC method is introduced to check and revise the error data for decreasing the BER and insuring reliable and integral datum storage. In power management, the power saving mode for several central chips is adopted to decrease the power consumption [4-6].

2.2. The central modules and part circuits

The reliability, anti-jamming, welding procedure and embedding technology of circuits are the key of design. The gain compensation method is used to insure linearity amplitude, anti-aliasing filter is used to avoid the signal distortion, and the TQFP procedure is adopted to ensure the welding quality of surface chips. The circuits enclosed with C8051F340 are introduced, and the amplifier, filter, and power are omitted.

According to the real-time performance, reliability and stability required by the actual drop test, the 988 type of acceleration sensor, C8051F340, and FM22L16 are chosen.

The acceleration sensor has 100000g measuring range and 25 KHz frequency response.

The signal processing module is designed with C8051F340. It is fully integrated mixed-signal System-on-a-Chip MCU made by Cygnal company improving Silicon Labs' proprietary CIP-51 microcontroller core. It employs a pipelined high-speed pipelined 8051-compatible microcontroller core (up to 48 MIPS) that greatly increases its instruction throughput and executes 70% of its instructions in one or two system clock cycles with only four instructions taking more than four system clock cycles. Furthermore it includes several key enhancements to the peripherals to improve performance and ease of use in end applications, such as universal Serial Bus (USB) function controller with eight flexible endpoint pipes, true 10-bit 200 ksps differential / single-ended ADC with analog multiplexer, and up to 40 port I/O.

The low power consumption and data can be retained after power is removed are required by datum memory, besides the high speed and enough capacity data storage, so the FM22L16 is chosen with a 256K×16 memory made by Ramtron company, that is a nonvolatile ferroelectric random access memory or FRAM and can provides data retention for over 10 years. Furthermore, single supply, small bulk, the fast write timing, and high write endurance make FRAM superior to other types of memory.

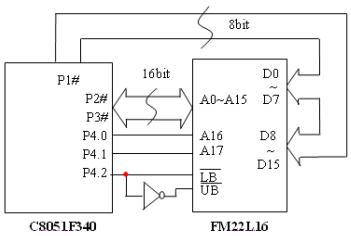

Fig. 2. Address generator circuit.

To content the 5S record time and 100kSPS of requirement by system, the two FM22L16 chips with parallel interface are simply connected with MCU. Because the 10 bit A/D and the P1 interface are designed to 8 bit data input lines, one sampling datum is detached to high 8 bit and low 8 bit stored into memory. An NAND gate, $\overline{LB}$, $\overline{UB}$ are used to select high or low byte, as well as P2,P3, and part of P4 interfaces are used to address lines, so 19 address lines satisfy the addressing requirement in address generator circuits shown in Fig.2.

The signal waiting triggering, the negative delay and data circular storage, continuous sampling is main design ideas. Once the power is supplied, the charge amplifier, ADC, address generator and memorizer begin to work, and the data are circularly written into memory until they extend the FRAM memory capacity, then the data will be stored from 0000H and former datum be covered. The voltage outputted from the charge amplifier is monitored by inner voltage comparator. When the voltage is bigger than the presetted trigger voltage, the effective data are stored. To the shock signal is acquired perfectly, the negative delay time and the sampling data length must be presented, so the data will be recorded from the negative delay time ahead of the triggered time and be stopped after exceed the sampling data length[7,8].

2.3. Encapsulating technology and optimized configuration

To resist the high overload, the encapsulating materials and embedding technology of circuit's board assemblies are studied, that can avoid relative displacement and violent vibration of circuits to stabilize the chips. The epoxies, organic elastic silica gel, and the polyurethane material are usually utilized to the encapsulating materials. In this paper, the Sylgard 184 organic elastic silica gel is used. Two components can be fast and equably solidified on the normal temperature without outgrowth, secondary solidified process, air bladder, and exothermic reaction in deep-seated and airtight container, which has excellent electric and temperature performance(-55℃~200℃). To insure encapsulating quality, the interspaces between the chips and circuits are firstly filled with epoxies, and then the set is affused with the Sylgard 184. In this process, the air bladder must be eliminated to prevent the holes inducing stress to damage the chips.

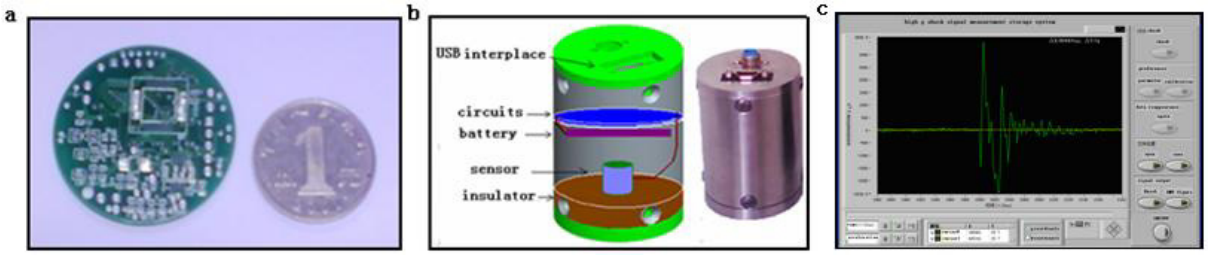

Fig. 3. (a) Circuit board; (b) Structure and actual system diagram;(c) Software interface diagram

To increase the ability of resisting high shock, the circuit board and the structure of the system must be optimized, shown in Fig.3(a) and Fig.3(b) respectively.

On the software design, the procedures wrote into memorizers are used to set up the sampling parameter and transmit the data to computer. The procedures on computer are used to analyze and display the acceleration time curve, compiled by Labview 8.2 shown in Fig.3(c).

3. Calibration methods and experiments

To test the performance of the assembled set, the calibration experiment must be done. The static method is used to detect the electrical performance of system when the different measuring range is chosen, that is the charge output instrument and the signal generator are used to generate the standard sine signal measured by high precision dynamic multimeter. The least squares method is applied to acquire the curve fitting analyzing linearity is 0.205%, the accuracy is 0.245%, the sampling frequency is 100 KHz, the sampling length is 5 second, and the measuring range is 100000g. At the same time the coefficient of correction can be calculated when the voltage is converted into the impact load. The common 2925 type of shock or Hopkinson Pressure Bar calibration instrument is not fit for dynamic calibration method because the bulk and weight of the set are too big and heavy. The Marshall Hammer machine is applied to check the set resisting at least high overload of 60000g shown in Fig.4(a).

The system is assessed by the 22m packaging case drop test in Fig.4(b) with steel target matted by a rubber cushion to check the engineering practicability. The set is placed in a 300mm diameter and 10mm thick columned steel barrel against an accelerator sensor connected by exterior measurement instrument with long lead. The experiment result is offered in Fig.4(c) and the lead is broken, so we can check that the system has more reliability.

Fig. 4. (a) Dynamic calibration experiment result; (b) The drop test tower; (c) Drop experiment result

4. Conclusions

Through the drop test, we find that the viability of battery under high shock is important besides the defense of circuits, so the battery will be parallel connected by a big capacitance following the Sandia Lab to offer the instant power-off protection. We summarize some aspects that deserve making further efforts to study. If the sensor and adapter are replaced, the system can be used to measure the strain, temperature, displacement and so on, so the design has some referenced value to measure the other transient signals based on the storage testing method.

References

1.YU Jun, WANG Bo, JIAO Xinquan, QIN Li.Platform building of anti-high overload capacity data storage test system. Computer Measurement & Control 2009: 17(12): 2410–2412.

2.CHEN Kexun, PEI Dongxing, JING Hong.Design of storage testing system based on DSP.Journal of Data Acquisition & Processing 2009:24: 302–304.

3.WEN Feng, QIAO Jianzhong, LI Yan.Study on anti over-loaded technology in high over-loaded storage testing.Transducer and Microsystem Technologies 2009:28(9):31–34.

4.ZHU Shiyong, ZU Jing, FAN Jinbiao.Missile-borne storage measurement and test instrument of acceleration based on CPLD.Journal of Detection & Control 2009:31(1):43–46.

5.HAN Xueping, RUI Xiaoting, YANG Fufeng.Design and simulation on projectile-borne storage testing system based on embedded system. Journal of System Simulation 2009:21(1):84–87.

6.LI Ming, LIU Mingjie, LI Xiaofeng.Application of C8051 microcontroller in acceleration testing System. Microcomputer Information 2009:23(82):91–92.

7.Rolf Stämpfli and Paul A Brühwiler. Flexible and precise drop test system. Measurement Science and Technology 2009:20(11):1-8

8. Garland PP and Rogers R J. Dynamic calibration of tri-axial piezoelectric force transducers .Meas.SCI.Technol 2008.19.095202