Ain Shams Engineering Journal (2014) 5, 569–574

Ain Shams University

Ain Shams Engineering Journal

www.elsevier.com/locate/asej
www.sciencedirect.com

ENGINEERING PHYSICS AND MATHEMATICS

Analytical solution of fractional Navier–Stokes equation by using modified Laplace decomposition method

Sunil Kumar [a,*], **Deepak Kumar** [b], **Saeid Abbasbandy** [c], **M.M. Rashidi** [d,e]

[a] *Department of Mathematics, National Institute of Technology, Jamshedpur 831014, Jharkhand, India*
[b] *Department of Statistics, Banaras Hindu University, Varanasi 221005, India*
[c] *Department of Mathematics, Imam Khomeini International University, Ghazvin 34149-16818, Iran*
[d] *Mechanical Engineering Department, Engineering Faculty of Bu-Ali Sina University, Hamedan, Iran*
[e] *University of Michigan-Shanghai Jiao Tong University Joint Institute, Shanghai Jiao Tong University, Shanghai, People's Republic of China*

Received 21 August 2013; revised 21 October 2013; accepted 13 November 2013
Available online 24 January 2014

KEYWORDS

Adomian decomposition method (ADM);
Laplace transform method (LTM);
Fractional modified Laplace decomposition method (FMLDM);
Fractional Navier–Stokes equation;
Analytic solution

Abstract The aim of this article is to introduce a new analytical and approximate technique to obtain the solution of time-fractional Navier–Stokes equation in a tube. This proposed technique is the coupling of Adomian decomposition method (ADM) and Laplace transform method (LTM). We have consider the unsteady flow of a viscous fluid in a tube in which, besides time as one of the dependent variable, the velocity field is a function of only one space coordinate. A good agreement between the obtained solutions and some well-known results has been demonstrated. It is shown that the proposed method robust, efficient, and easy to implement for linear and nonlinear problems arising in science and engineering.

1. Introduction

In recent years, considerable interest in fractional differential equations has been stimulated due to their numerous applications in the areas of physics and engineering [1]. In past years, it has turned out that differential equations involving derivatives of noninteger order can be adequate models for various physical phenomena [2]. Many important phenomena are well described by fractional differential equations in electromagnetics, acoustics, visco-elasticity, electro-chemistry and material science. That is because of the fact that a realistic modeling of a physical phenomenon having dependence not only at

* Corresponding author. Tel.: +91 7870102516, 9415846185.
E-mail addresses: skumar.math@nitjsr.ac.in, skiitbhu28@gmail.com (S. Kumar), deepak.iit83@gmail.com (D. Kumar), abbasbandy@yahoo.com (S. Abbasbandy), mm_rashidi@yahoo.com (M.M. Rashidi).
Peer review under responsibility of Ain Shams University.

Production and hosting by Elsevier

2090-4479 © 2014 Production and hosting by Elsevier B.V. on behalf of Ain Shams University.
http://dx.doi.org/10.1016/j.asej.2013.11.004

the time instant, but also the previous time history can be successfully achieved by using fractional calculus. The book by Oldham and Spanier [3] has played a key role in the development of the subject. Some fundamental results related to solving fractional differential equations may be found in Miller and Ross [4], Kilbas and Srivastava [5], Diethelm and Ford [6], Diethelm [7], and Samko et al. [8].

Our concern in this work is to consider unsteady, one-dimensional motion of a viscous fluid in a tube. The equations of motion which govern the flow field in the tube are the Navier–Stokes equations in cylindrical coordinates [9,10], and they are given as:

$$D_t u(r,t) = P + v\left(D_r^2 u + \frac{1}{r} D_r u\right), \tag{1.1}$$

where $P = -\frac{\partial p}{\rho \partial z}$, t is the time, u is the velocity, p is the pressure, v is the kinematics viscosity, ρ is the density. We shall consider the unsteady flow of a viscous fluid in a tube in which, besides time as one of the dependent variables, the velocity field is a function of only one space coordinate.

Thus, seeking solutions of nonlinear fractional ordinary and partial differential equations still a significant task. Except in a limited numbers of these equations, we have difficulty to find their analytical as well as approximate solutions. Therefore, there have been attempts to develop the new methods for obtaining analytical and approximate solutions of nonlinear fractional ordinary and partial differential equations arising in science and engineering sciences. Recently, several methods have drawn special attention such as Adomian decomposition method [11–13], variational iteration method [14,15], homotopy perturbation method [16–20], homotopy analysis method [21–24], optimal homotopy asymptotic method [25–27], differential transform method [28,29], and Hamiltonian and He's energy balance approach [30–35]. The aim of the present work is to introduce an analytical technique, namely fractional modified Laplace decomposition method (FMLDM) to solve fractional differential equation arising in science and engineering. The proposed method (FMLDM) is coupling of Adomian decomposition method (ADM) and the Laplace decomposition method (LDM). The main advantage of this proposed method is its capability of combining two powerful methods for obtaining rapid convergent series for fractional partial differential equations. Adomian decomposition method [36,37] was firstly proposed by the Adomian and applied by many researchers [38,39]. In recent years, many authors have paid attention to study the solutions of differential and integral equations by using various methods with combined the Laplace transform. Among these are the Laplace decomposition methods [40–44], homotopy perturbation transform method [45–48], and homotopy analysis transform method [49–51].

The main aim of this article is to present approximate analytical solutions of time-fractional Navier–Stokes equation by using modified fractional Laplace decomposition method (MFLDM). The Navier–Stokes equation (NSE) with time-fractional derivatives is written in operator form as:

$$D_t^{\alpha} u(r,t) = P + v\left(D_r^2 u + \frac{1}{r} D_r u\right), \quad 0 < \alpha \leqslant 1, \tag{1.2}$$

where α is parameter describing the order of the time fractional derivatives. In the case of $\alpha = 1$, the fractional equation reduces to the standard Navier–Stokes equation.

2. Basic definitions of fractional calculus and Laplace transforms

In this section, we give some basic definitions and properties of fractional calculus and Laplace transform theory, which shall be used in this paper:

Definition 2.1. A real function $f(t)$, $t > 0$ is said to be in the space C_μ, $\mu \in R$ if there exists a real number $p > \mu$, such that $f(t) = t^p f_1(t)$ where $f_1(t) \in C(0,\infty)$, and it is said to be in the space C_μ if and only if $f^{(n)} \in C_\mu$, $n \in N$.

Definition 2.2. The left sided Riemann–Liouville fractional integral operator of order $\mu \geqslant 0$, of a function $f \in C_\alpha$, $\alpha \geqslant -1$ is defined as [52,53]

$$I^\mu f(t) = \begin{cases} \frac{1}{\Gamma(\mu)} \int_0^t (t-\tau)^{\mu-1} f(\tau) d\tau & \mu > 0,\ t > 0, \\ f(t) & \mu = 0, \end{cases} \tag{2.1}$$

where $\Gamma(\cdot)$ is the well-known Gamma function.

Definition 2.3. The left sided Caputo fractional derivative of f $f \in C_{-1}^m$, $m \in N \cup \{0\}$ is defined as [2,8]

$$D_*^\mu f(t) = \frac{\partial^\mu f(t)}{\partial t^\mu} = \begin{cases} I^{m-\mu}\left[\frac{\partial^m f(t)}{\partial t^m}\right], & m-1 < \mu < m,\ m \in N, \\ \frac{\partial^m f(t)}{\partial t^m} & \mu = m, \end{cases} \tag{2.2}$$

Note that [2,8]

(i) $I_t^\mu f(x,t) = \frac{1}{\Gamma(\mu)} \int_0^t \frac{f(x,t)}{(t-s)^{1-\mu}} dt, \quad \mu > 0,\ t > 0,$

(ii) $D_*^\mu f(x,t) = I_t^{m-\mu} \frac{\partial^m f(x,t)}{\partial t^m} \quad m-1 < \mu \leqslant m.$

Definition 2.4. The Laplace transform $L[f(t)]$ of the Riemann–Liouville fractional integral is defined as [2]:

$$L[I^\alpha f(t)] = s^{-\alpha} F(s). \tag{2.3}$$

Definition 2.5. The Laplace transform $L[f(t)]$ of the Caputo fractional derivative is defined as [2]

$$L[D_t^{n\alpha} u(x,t)] = s^{n\alpha} L[u(x,t)] - \sum_{k=0}^{n-1} s^{(n\alpha-k-1)} u^{(k)}(x,0), \quad n-1 < n\alpha \leqslant n. \tag{2.4}$$

3. Basic idea of modified fractional Laplace decomposition method (MFLDM)

To illustrate the basic idea of the fractional modified Laplace decomposition for the fractional partial differential equation, we consider the following general nonlinear fractional partial differential equation as:

$$D_t^{n\alpha} u(x,t) + R[x]u(x,t) + N[x]u(x,t) = g(x,t), \quad t > 0,$$
$$x \in R, \quad n-1 < n\alpha \leqslant n, \tag{3.1}$$

where $D_t^{n\alpha} = \frac{\partial^{n\alpha}}{\partial t^{n\alpha}}$, and $R[x]$, $N[x]$ indicate the linear and nonlinear terms in x, and $g(x,t)$ are continuous functions. Now, the methodology consists of applying Laplace transform first on both sides of Eq. (3.1), we get

$$L[D_t^{n\alpha}u(x,t)] + L[R[x]u(x,t) + N[x]u(x,t)] = L[g(x,t)], \quad t > 0, \quad x \in R, \quad n-1 < n\alpha \leqslant n. \tag{3.2}$$

Now, using the differential property of the Laplace transform for the fractional derivative

$$s^{n\alpha}L[u(x,t)] - \sum_{k=0}^{n-1} s^{(n\alpha-k-1)}u^k(x,0) + L[R[x]u(x,t) + N[x]u(x,t)] = L[g(x,t)]. \tag{3.3}$$

On simplifying

$$L[u(x,t)] = s^{-n\alpha}\sum_{k=0}^{n-1} s^{(n\alpha-k-1)}u^k(x,0) + s^{-n\alpha}L[g(x,t)] - s^{-n\alpha}L[R[x]u(x,t) + N[x]u(x,t)]. \tag{3.4}$$

Operating the inverse Laplace transform on both sides in Eq. (3.4), we get

$$u(x,t) = G(x,t) - L^{-1}(s^{-n\alpha}L[R[x]u(x,t) + N[x]u(x,t)]), \tag{3.5}$$

where $G(x,t)$ represents the term arising from the source term and the prescribed initial conditions.

The Laplace transform decomposition admits a solution in the form

$$u(x,t) = \sum_{m=0}^{\infty} u_m(x,t). \tag{3.6}$$

The nonlinear term Nu decomposed as

$$Nu(x,t) = \sum_{m=0}^{\infty} A_m, \tag{3.7}$$

where A_m are Adomian polynomials of $u_0, u_1, u_2, \ldots, u_n$ and it can calculated by the following formula

$$A_m = \frac{1}{m!}\frac{d^m}{dt^m}\left[N\left(\sum_{i=0}^{\infty}\lambda^i u_m\right)\right]\Bigg|_{\lambda=0}, \quad m = 0,1,2,3,\ldots \tag{3.8}$$

Substituting Eqs. (3.6) and (3.7) in Eq. (3.5), we get

$$\sum_{i=0}^{\infty} u_m(x,t) = G(x,t) - L^{-1}\left(s^{-n\alpha}L\left[R[x]\left(\sum_{i=0}^{\infty}u_m\right) + \left(\sum_{i=0}^{\infty}A_m\right)\right]\right), \tag{3.9}$$

Equating the terms on both sides of Eq. (3.9), we have the following relation

$$u_0(x,t) = G(x,t), \quad u_{m+1}(x,t) = L^{-1}(s^{-n\alpha}L[R[x]u_m + A_m]), \quad m \geqslant 0. \tag{3.10}$$

The modified Laplace decomposition method suggests that the function $G(x,t)$ defined above be decomposed into two parts, namely $G_0(x,t)$ and $G_1(x,t)$. Such that

$$G(x,t) = G_0(x,t) + G_1(x,t). \tag{3.11}$$

The initial condition is important, and the choice the function $G(x,t)$ as the initial condition always leads to the noise oscillation during the iteration procedure. Instead of the iteration procedure, we suggest the following iterations

$$u_0(x,t) = G_0(x,t), \tag{3.12}$$

$$u_1(x,t) = G_1(x,t) + L^{-1}(s^{-n\alpha}L[R[x]u_0 + A_0]), \tag{3.13}$$

$$u_2(x,t) = L^{-1}(s^{-n\alpha}L[R[x]u_1 + A_1]),$$

$$u_3(x,t) = L^{-1}(s^{-n\alpha}L[R[x]u_2 + A_2]),$$

$$\vdots$$

$$u_{m+1}(x,t) = L^{-1}(s^{-n\alpha}L[R[x]u_m + A_m]). \tag{3.14}$$

The solution through the modified Laplace decomposition method highly depends upon the choice of $G_0(x,t)$ and $G_1(x,t)$.

4. Illustrative examples

In this section, we apply the fractional modified Laplace decomposition method (FMLDM) for solving time-fractional Navier–Stokes equation in a tube.

Example 1. We consider the following time fractional Navier–Stokes equation [9] as:

$$D_t^{\alpha}u(r,t) = P + u_{rr} + \frac{1}{r}u_r, \quad 0 < \alpha \leqslant 1, \tag{4.1}$$

subject to the initial condition

$$u(r,0) = 1 - r^2. \tag{4.2}$$

Operating the Laplace transform in Eq. (4.1) and using the differential property of the Laplace transform, we get

$$L[u(r,t)] = \frac{1-r^2}{s} + \frac{P}{s^{\alpha+1}} + \frac{1}{s^{\alpha}}L\left[u_{rr} + \frac{1}{r}u_r\right]. \tag{4.3}$$

Applying the inverse Laplace transform in Eq. (4.3), we get

$$u(r,t) = (1-r^2) + P\frac{t^{\alpha}}{\Gamma(\alpha+1)} + L^{-1}\left(s^{-\alpha}L\left[u_{rr} + \frac{1}{r}u_r\right]\right). \tag{4.4}$$

By applying the aforesaid technique if we assume an infinite series solution of the form (3.6), we obtain

$$\sum_{m=0}^{\infty} u_m(r,t) = (1-r^2) + P\frac{t^{\alpha}}{\Gamma(\alpha+1)} + L^{-1}\left(s^{-\alpha}L\left[\left(\sum_{m=0}^{\infty}u_m(r,t)\right)_{rr} + \frac{1}{r}\left(\sum_{m=0}^{\infty}u_m(r,t)\right)_r\right]\right). \tag{4.5}$$

Now, applying the fractional modified Laplace decomposition method, we get

$$u_0(r,t) = 1 - r^2,$$

$$u_1(r,t) = \frac{Pt^{\alpha}}{\Gamma(\alpha+1)} + L^{-1}\left(s^{-\alpha}L\left[u_{0rr} + \frac{1}{r}u_{0r}\right]\right) = \frac{(P-4)t^{\alpha}}{\Gamma(\alpha+1)},$$

$$u_m(r,t) = 0, \forall m \geqslant 2.$$

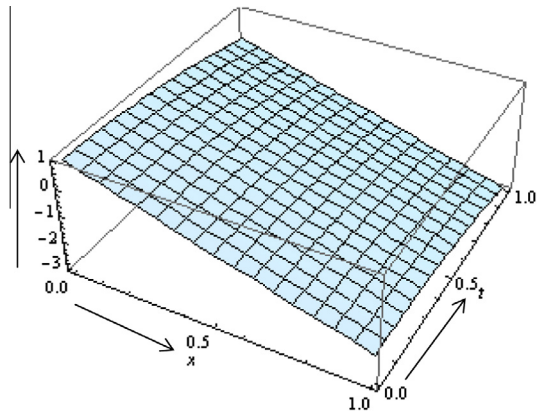

Figure 1 Plot of the approximate solution for value $\alpha = 1$.

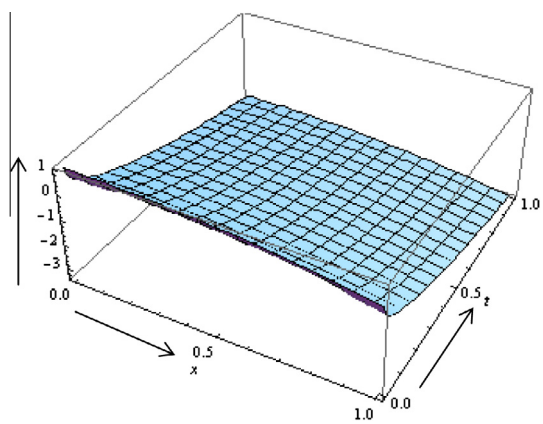

Figure 2 Plot of the approximate solution for value $\alpha = 0.5$.

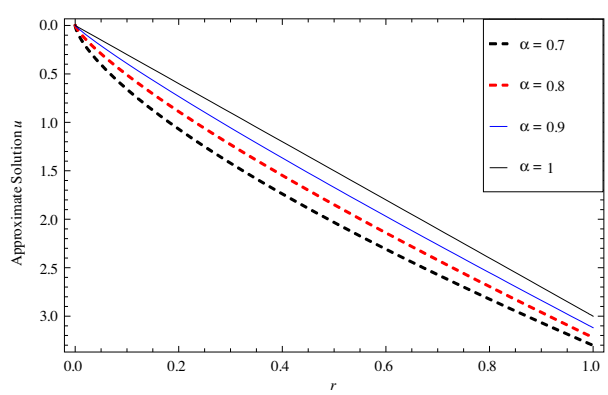

Figure 3 The behavior of the solutions for different value of α at $P = 1$, $r = 1$.

The solution is given as

$$u(r,t) = \sum_{m=0}^{\infty} u_m(r,t) = 1 - r^2 + \frac{(P-4)t^{\alpha}}{\Gamma(\alpha+1)}. \tag{4.6}$$

However, in many cases, the exact solution in a closed form may be obtained. It is obvious that in this example, three components only were sufficient to determine the exact solution of Eq. (4.1). The above result is in complete agreement with Momani and Odibat [9].

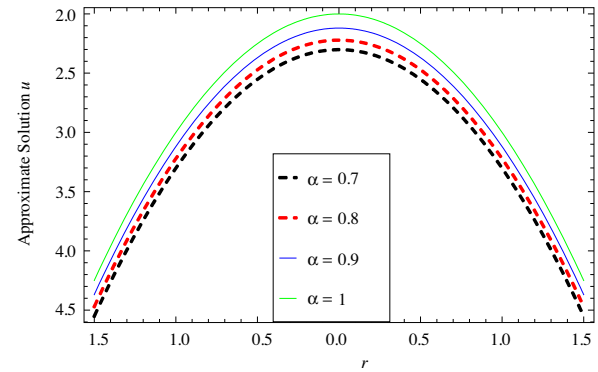

Figure 4 The behavior of the solutions for different value of α at $P = 1$, $t = 1$.

Figs. 1–4 show the evaluation results of the approximate analytical solution for the Example 1 and show the behavior of the approximate solution obtained by the proposed method for different fractional Brownian motions $\alpha = 0.7, 0.8, 0.9$ and for standard motions, i.e., for $\alpha = 1$. It is seen from Fig. 2 that the approximate analytical solution obtained by proposed method decreases very rapidly with the increases in t at the value of $x = 1$ for Example 1.

Example 2. In this example, we consider the following time fractional Navier–Stokes equation [9] as:

$$D_t^{\alpha} u(r,t) = u_{rr} + \frac{1}{r} u_r, \quad 0 < \alpha \leqslant 1, \tag{4.7}$$

subject to the initial condition

$$u(r,0) = r. \tag{4.8}$$

Applying the aforesaid procedure as the previous example, we get

$$\sum_{m=0}^{\infty} u_m(r,t) = r + L^{-1}\left(s^{-\alpha} L\left[\left(\sum_{m=0}^{\infty} u_m(r,t)\right)_{rr} + \frac{1}{r}\left(\sum_{m=0}^{\infty} u_m(r,t)\right)_{r}\right]\right). \tag{4.9}$$

Now applying the aforesaid procedure, the first few terms of the decomposition series are given by

$$u_0(r,t) = r,$$

$$u_1(r,t) = L^{-1}\left(s^{-\alpha} L\left[u_{0rr} + \frac{1}{r} u_{0r}\right]\right) = \frac{1}{r}\frac{t^{\alpha}}{\Gamma(\alpha+1)},$$

$$u_2(r,t) = L^{-1}\left(s^{-\alpha} L\left[u_{1rr} + \frac{1}{r} u_{1r}\right]\right) = \frac{1^2}{r^3}\frac{t^{2\alpha}}{\Gamma(2\alpha+1)},$$

$$u_3(r,t) = L^{-1}\left(s^{-\alpha} L\left[u_{2rr} + \frac{1}{r} u_{2r}\right]\right) = \frac{1^2 \times 3^2}{r^5}\frac{t^{3\alpha}}{\Gamma(3\alpha+1)},$$

$$u_4(r,t) = L^{-1}\left(s^{-\alpha} L\left[u_{3rr} + \frac{1}{r} u_{3r}\right]\right) = \frac{1^2 \times 3^2 \times 5^2}{r^7}\frac{t^{4\alpha}}{\Gamma(4\alpha+1)},$$

$$u_n(r,t) = L^{-1}\left(s^{-\alpha} L\left[u_{(n-1)rr} + \frac{1}{r} u_{(n-1)r}\right]\right)$$
$$= \frac{1^2 \times 3^2 \times 5^2 \times \cdots \times (2n-3)^2}{r^{2n-1}}\frac{t^{n\alpha}}{\Gamma(n\alpha+1)}. \tag{4.10}$$

Therefore, the series solution by FMLDM is given as

$$u(r,t) = \sum_{m=0}^{\infty} u_m(r,t) = r + \sum_{n=1}^{\infty} \frac{1^2 \times 3^2 \times 5^2 \times \cdots \times (2n-3)^2}{r^{2n-1}} \times \frac{t^{n\alpha}}{\Gamma(n\alpha+1)}. \tag{4.11}$$

The solution of the standard Navier–Stokes equation (for $\alpha = 1$) is given as

$$u(r,t) = \sum_{m=0}^{\infty} u_m(r,t) = r + \sum_{n=1}^{\infty} \frac{1^2 \times 3^2 \times 5^2 \times \cdots \times (2n-3)^2}{r^{2n-1}} \frac{t^n}{n!}. \tag{4.12}$$

The above result is in complete agreement with Momani and Odibat [9].

5. Concluding remarks

The new modification of decomposition method is powerful tool to search the solution of various linear and nonlinear problems arising in science and engineering. The main aim of this article is to provide the series solution of the time-fractional Navier–Stokes equation by using the fractional modified Laplace decomposition method (FMLDM). The analytical results have been given in terms of a power series with easily computed terms. The method overcomes the difficulty in other methods because it is efficient. Two examples were investigated to demonstrate the ease and versatility of our new approach. The illustrative examples show that the method is easy to use and is an effective tool to solve fractional partial differential equations numerically.

Acknowledgments

The authors wish to express their cordial thanks to the anonymous referees whose comments and suggestions improved the presentation and quality of the paper.

References

[1] West BJ, Bolognab M, Grigolini P. Physics of fractal operators. New York: Springer; 2003.
[2] Podlubny I. Fractional differential equations calculus. New York: Academic Press; 1999.
[3] Oldham KB, Spanier J. The fractional calculus. New York: Academic Press; 1974.
[4] Miller KS, Ross B. An introduction to the fractional calculus and fractional differential equations. New York: Johan Willey & Sons, Inc.; 2003.
[5] Kilbas AA, Srivastava HM, Trujillo JJ. Theory and applications of fractional differential equations. Amsterdam: Elsevier; 2006.
[6] Diethelm K, Ford NJ. Analysis of fractional differential equations. J Math Anal Appl 2002;265:229–48.
[7] Diethelm K. An algorithms for the numerical solutions of differential equations of fractional order. Elec Trans Numer 1997;5:1–6.
[8] Samko SG, Kilbas AA, Marichev OI. Fractional integrals and derivatives: theory and applications. Yverdon: Gordon and Breach; 1993.
[9] Momani S, Odibat Z. Analytical solution of a time-fractional Navier–Stokes equation by Adomian decomposition method. Appl Math Comput 2006;177:488–94.
[10] Biazar J, Babolian E, Kember G, Nouri A, Islam R. An alternate algorithm for computing Adomian polynomials in special cases. Appl Math Comput 2002;138:523–9.
[11] Song L, Wang W. A new improved Adomian decomposition method and its application to fractional differential equations. Appl Math Modell 2013;37(3):1590–8.
[12] Herzallah MAE, Gepreel KA. Approximate solution to the time–space fractional cubic nonlinear Schrodinger equation. Appl Math Modell 2012;36(11):5678–85.
[13] Faraz N, Khan Y, Sankar DS. Decomposition-transform method for fractional differential equations. Int J Nonlinear Numer Simul 2010;11:305–10.
[14] Faraz N, Khan Y, Jafari H, Yildirim A, Madani M. Fractional variational iteration method via modified Riemann–Liouville derivative. J King Saud Univ Sci 2011;23(4):413–7.
[15] Faraz N. Study of the effects of the Reynolds number on circular porous slider via variational iteration algorithm-II. Comput Math Appl 2011;61(8):1991–4.
[16] Kumar S, Singh OP. Numerical inversion of the Abel integral equation using homotopy perturbation method. Z Naturforschung 2010;65a:677–82.
[17] Kumar S, Khan Y, Yildirim A. A mathematical modelling arising in the chemical systems and its approximate numerical solution. Asia Pac J Chem Eng 2012;7(6):835–40.
[18] Kumar S. A numerical study for solution of time fractional nonlinear shallow-water equation in oceans. Z Naturforschung A 2013;68 a:1–7.
[19] Kadem A, Baleanu D. Homotopy perturbation method for the coupled fractional Lotka–Volterra equations. Rom J Phys 2011;536(3):332–8.
[20] Khan NA, Ara A, Ali SA, Mahmood A. Analytical study of Navier–Stokes equation with fractional orders using He's homotopy perturbation and variational iteration methods. Int J Nonlinear Sci Numer Simul 2011;10(9):1127–34.
[21] Vishal K, Kumar S, Das S. Application of homotopy analysis method for fractional Swift Hohenberg equation – revisited. Appl Math Modell 2012;36(8):3630–7.
[22] Khan NA, Jamil M, Ara A. Approximate solutions to time-fractional Schrödinger equation via homotopy analysis method. ISRN Math Phys 2012. Article ID 197068, 11.
[23] Abbasbandy S. Approximate solution for the nonlinear model of diffusion and reaction in porous catalysts by means of the homotopy analysis method. Chem Eng J 2008;136:144–50.
[24] Rashidi MM, Pour SAM. Analytic approximate solutions for unsteady boundary-layer flow and heat transfer due to a stretching sheet by homotopy analysis method. Nonlinear Anal Model Cont 2010;15(1):83–95.
[25] Khan N, Mahmood T, Hashmi MS. OHAM solution for thin film flow of third grade fluid flow through porous medium over a inclined plane. Heat Tran Res 2013;44(8):719–31.
[26] Hashmi MS, Khan N, Iqbal S. Numerical solutions of weakly singular volterra integral equations using optimal homotopy asymptotic method. Comput Math Appl 2012;64:1567–74.
[27] Hashmi MS, Khan N, Iqbal S. Optimal homotopy asymptotic method for solving nonlinear Fredholm integral equations of second kind. Appl Math Comput 2012;218:10982–9.
[28] Rashidi MM. The modified differential transform method for solving MHD boundary-layer equations. Comput Phys Commun 2009;180:2210–7.

[29] Keimanesh M, Rashidi MM, Chamkha AJ, Jafari R. Study of a third grade non Newtonian fluid flow between two parallel plates using the multi-step differential transform method. Comput Math Appl 2011;62:2871–91.
[30] Younesian D, Askari H, Saadatnia Z, Yazdi MK. Frequency analysis of strongly nonlinear generalized duffing oscillators using He's frequency–amplitude formulation and He's energy balance method. Comput Math Appl 2010;59(9):3222–8.
[31] Younesian D, Askari H, Saadatnia Z, Yazdi MK. Analytical approximate solutions for the generalized nonlinear oscillator. Appl Anal 2012;91(5):965–77.
[32] Yildirim A, Saadatnia Z, Askari H, Khan Y, Yazdi MK. Higher order approximate periodic solutions for nonlinear oscillators with the Hamiltonian approach. Appl Math Lett 2011;24(12):1969–2216.
[33] Khan Y, Yazdi MK, Askari H, Saadatnia Z. Dynamic analysis of generalized conservative nonlinear oscillators via frequency amplitude formulation. Arab J Sci Eng 2013;38:175–9.
[34] Yildirim A, Askari H, Yazdi MK, Khan Y. A relationship between three analytical approaches to nonlinear problems. Appl Math Lett 2012;25(11):1585–2008.
[35] Younesian D, Askari H, Saadatnia Z, Yazdi MK. Free vibration analysis of strongly nonlinear generalized duffing oscillators using he's variational approach & homotopy perturbation method. Nonlinear Sci Lett A 2011;2:11–6.
[36] Adomian G. A review of the decomposition method in applied mathematics. J Math Anal Appl 1988;135:501–44.
[37] Adomian G. Solving frontier problems of physics: the decomposition method. Boston: Kluwer Academic Publishers; 1994.
[38] Abbsbandy S. A numerical solution of Blasius equation by Adomian's decomposition method and comparison with homotopy perturbation method. Chaos Soliton Fract 2007;31:257–60.
[39] Abbasbandy S, Darvishi MT. A numerical solution of Burgers' equation by modified Adomian method. Appl Math Comput 2005;3:1265–72.
[40] Wazwaz AM, Mehanna MS. The combined Laplace–Adomian method for handling singular integral equation of heat transfer. Int J Nonlinear Sci 2010;10:248–52.
[41] Khan M, Hussain M. Application of Laplace decomposition method on semi-infinite domain. Numer Algorithms 2011;56:211–8.
[42] Jafari H, Khalique CM, Nazari M. Application of the Laplace decomposition method for solving linear and nonlinear fractional diffusion–wave equations. Appl Math Lett 2011;24:1799–805.
[43] Khan M, Gondal MA, Kumar S. A new analytical solution procedure for nonlinear integral equations. Math Comput Modell 2012;55:1892–7.
[44] Khan Y, Faraz N. Application of modified Laplace decomposition method for solving boundary layer equation. J King Saud Univ 2011;23:115–9.
[45] Kumar S, Kocak H, Yildirim A. A fractional model of gas dynamics equations and its approximate solutions by using Laplace transform. Z Naturforsch 2012;67a:389–996.
[46] Kumar S. Numerical computation of time-fractional equation arising in solid state physics and circuit theory. Z Naturforsch 2013:1–8.
[47] Singh J, Kumar D, Kumar S. A new reliable algorithm for solving discontinuity problem in nanotechnology. Sci Iran 2013;20(3):1059–62.
[48] Khan Y, Faraz N, Kumar S, Yildirim A. A coupling method of homotopy method and Laplace transform for fractional modells. UPB Sci Bull Ser A Appl Math Phys 2012;74(1):57–68.
[49] Kumar S, Singh J, Kumar D, Kapoor S. New homotopy analysis transform algorithm to solve Volterra integral equation. Ain Shams Eng J 2014;5:243–6.
[50] Khader MM, Kumar S, Abbasbandy S. New homotopy analysis transform method for solving the discontinued problems arising in nanotechnology. Chin Phys B 2013;22(11):110201.
[51] Arife AS, Vanani SK, Soleymani F. The Laplace homotopy analysis method for solving a general fractional diffusion equation arising in nano-hydrodynamics. J Comput Theor Nanosci 2012;10:1–4.
[52] Luchko Y, Gorenflo R. An operational method for solving fractional differential equations with the caputo derivatives. Acta Math Vietn 1999;24:207–33.
[53] Moustafa OL. On the Cauchy problem for some fractional order partial differential equations. Chaos Soliton Fract 2003;18:135–40.

Sunil Kumar is an Assistant Professor in the Department of Mathematics, National Institute of Technology, Jamshedpur 801014, Jharkhand, India. He is editor of twenty international journals. His field of current research includes fractional calculus and approximate, analytical and numerical solution of nonlinear problems arising in mechanics/fluid dynamics by using homotopy methods, Adomian decomposition method, and Laplace transform method.

Deepak Kumar obtained his B.Sc. degree from PPN degree college Kanpur, UP, India. He is postgraduate student in the Department of Statistics, Banaras Hindu University, Varanasi 221005, India. He has very good academic record in his study. His field of current research includes fractional calculus and approximate, analytical and numerical solution of nonlinear problems arising in mechanics/fluid dynamics by using homotopy methods, Adomian decomposition method, and Laplace transform method.

S. Abbasbandy is Professor in the Department of Mathematics, Imam Khomeini International University, Ghazvin 34149-16818, Iran. His field of current research includes fractional calculus and approximate, analytical and numerical solution of nonlinear problems arising in mechanics/fluid dynamics by using analytical and numerical methods.

M.M. Rashidi is an Associate Professor in the Department of Mechanical Engineering, Bu-Ali Sina University, Hamedan, Iran. His field of current research includes Heat and Mass Transfer, Thermodynamics, Exergy and Second Law Analysis, Computational Fluid Dynamics (CFD), Nonlinear Analysis, Engineering Mathematics, Numerical and Experimental Investigations of Nanofluids Flow for Increasing Heat Transfer, Study of Magnetohydrodynamic Viscous Flow and Study of Magnetic Beads Motion.