Composites Science and Technology 80 (2013) 31–38

Contents lists available at SciVerse ScienceDirect

Composites Science and Technology

journal homepage: www.elsevier.com/locate/compscitech

On the static and dynamic properties of flax and Cordenka epoxy composites

James Meredith [a,*], Stuart R. Coles [a], Richard Powe [a], Ed Collings [b], Sophie Cozien-Cazuc [c], Brendon Weager [d], Jorg Müssig [e], Kerry Kirwan [a]

[a] WMG, University of Warwick, Coventry CV4 7AL, UK
[b] Lola Composites, St. Peters Road, Huntingdon PE29 7DS, UK
[c] Umeco Composites Structural Materials, Sinclair Close, Heanor DE75 7SP, UK
[d] Composites Evolution, Bridge Way, Chesterfield S41 9QG, UK
[e] Hochschule Bremen, University of Applied Sciences, Neustadtswall 30, 28199 Bremen, Germany

ARTICLE INFO

Article history:
Received 4 October 2012
Received in revised form 8 February 2013
Accepted 1 March 2013
Available online 14 March 2013

Keywords:
A. Structural composites
B. Impact behaviour
B. Mechanical properties
C. Damage mechanics
D. Optical microscopy

ABSTRACT

Fibre reinforced composites have excellent specific properties and are widely sought after by engineers seeking to reduce mass. However, end of life disposal is a significant problem and so research into more sustainable natural fibre composites is extremely topical. This paper examines the applicability of natural fibre composites for high performance structural applications. Woven flax and regenerated cellulose (Cordenka) textiles were pre-impregnated with commercially available epoxy resins and consolidated into test laminates in an autoclave to determine their static (compressive, tensile, flexural) and dynamic (energy absorption) properties.

The range of compressive strengths was 77.5–299.6 MPa. Tensile strengths ranged from 63 to 92.6 MPa and interlaminar shear strength (ILSS) from 10.7 to 23.3 MPa. Specific energy absorption (SEA) varied between 21.2–34.2 kJ/kg. Biotex flax combined with MTM49 resin matched the SEA of T300 carbon fibre using the same resin system and layup. This work has demonstrated that natural fibre composites have significant scope for use in structural applications but additional work is required on fibre to matrix bonding in order to maximise their properties whilst remaining an environmentally credible option.

© 2013 Elsevier Ltd. Open access under CC BY-NC-ND license.

1. Introduction

The use of fibre-reinforced composites (FRCs) is increasing rapidly in the automotive, aerospace and wind energy sectors because of their high specific strength and modulus. For the automotive sector these materials aid mass reduction and reduce carbon dioxide emissions in order to meet legislative demands. However, there are problems with the disposal of intractable FRC materials. The directive (2005/64/EC) requires that vehicles built from 2008 should be reach a recycling target level of 85% and a recovery target level of 95% by 2015 [1]. As such there is now significant interest in sustainable alternatives.

Typically, fibre reinforcement is via carbon or glass. In 2010, worldwide carbon fibre consumption reached almost 40,000 tonnes and is expected to reach 65,000 tonnes by 2014 [2]. The market for glass fibre is approximately 10 times this size by mass and natural fibre production is many millions of tonnes although the proportion used in composites is currently low [3]. Man-made fibres are energy intensive to manufacture with carbon requiring 300 MJ/kg due to the numerous high temperature processes and glass 54.7 MJ/kg [2,3]. Natural fibres are renewable reinforcements with low embodied energy. However, after spinning and weaving it is similar to synthetic fibres although this is offset by their higher specific stiffness which will reduce their in use emissions [4,5].

Natural fibres offer numerous advantages over man-made fibres including low cost, low density, non-abrasive and less harmful during handling. They offer reduced dependence on non-renewable energy sources, have lower greenhouse gas emissions and are biodegradable at end of life [6,7]. However they are considered to have poor mechanical properties, low impact strength, high variation [8], poor adhesion between fibres and matrix and poor thermal stability (decomposition above 200 °C) [9]. Research into natural fibre composites aims to address these shortcomings by understanding how mechanical properties are effected by: harvesting and preparation [10,11], fibre to matrix interface, water content and strain rate [12,13].

Natural variation is a result of conditions during the growth and harvest of the plants e.g. soil characteristics, temperature, humidity and harvesting methods. These effect mechanical, physical and chemical properties of the fibres [8] which are exacerbated by

* Corresponding author.
E-mail address: james.meredith@warwick.ac.uk (J. Meredith).
URL: http://www.wmg.warwick.ac.uk (J. Meredith).

0266-3538 © 2013 Elsevier Ltd. Open access under CC BY-NC-ND license.
http://dx.doi.org/10.1016/j.compscitech.2013.03.003

variations in fibre diameter and shape causing disparity in reported fibre strengths [14]. Natural fibre composites suffer from poor adhesion between the hydrophilic fibres and hydrophobic matrix [15]. This leads to tensile failure perpendicular to the fibre direction [16] but can be improved through physical and chemical pre-treatment of the fibres [17–22]. Unfortunately, this increases cost due to the expensive equipment and chemicals required, as well as decreasing the environmental credentials of the material [23]. The hydrophilic fibres also absorb moisture causing variation in fibre properties [6] although flax fibres have been shown to have the lowest response to moisture of the natural fibres available [5]. The poor bond between fibre and matrix results in a high void content meaning the full mechanical properties of the composite cannot be realised; it also leaves the composite open to environmental attack [24].

Bast fibres are widely used because of their ready availability and high quality in both temperate (flax, hemp) and tropical (jute, kenaf) regions [11]. Flax is grown extensively across Europe which accounts for 80% of the total world flax crop [25]. Its principal use is in high value textiles and more recently in composites [26]. The fibres have a tensile strength of 1340–1500 MPa and Young's modulus of 50–70 GPa with a density of 1500 kg/m^3. Thus their specific properties are comparable with E glass [3,15]. Flax is one of the strongest and lightest untreated natural fibres commercially available, and is able to maintain that strength at approximately 200 °C for a short period of time [27].

The use of Cordenka rayon is a method of reducing the variation associated with natural fibres whilst still using a naturally derived feedstock [28]. Cordenka is a man-made cellulose fibre, produced by a variation of the viscose process which dissolves natural cellulose pulp in a sodium hydroxide and carbon disulphide solution. It is then ripened, filtered, degased and extruded into a fibre formation bath where the cellulose regenerates and the yarn is produced [29]. Cordenka is used to reinforce tyres due to its good adhesion to rubber and plastics, high thermal stability and high dimensional stability. However, it requires extensive processing and although derived from sustainable wood sources there is no data on its embodied energy.

In addition to excellent fibre and matrix properties, a high strength composite requires a low void fraction and high fibre volume fraction. Resin transfer moulding can deliver void fractions from 4% to 10% [6,30] but achieving lower values than this requires the use of woven prepreg materials and high pressure autoclave cure. Woven fabrics provide excellent reinforcement in the warp and weft directions, and as such, the strength characteristics of the composite can be tailored to their application [31]. However, woven fabrics are more expensive financially (typically 400%) and potentially environmentally due to the energy used in weaving and spinning [4,7].

In summary, natural fibres have specific properties comparable with E glass fibres and offer the potential to replace existing man-made materials with a more sustainable alternative. This paper investigates the applicability of flax and cellulose fibre composites for high performance structural applications. Samples have been manufactured using woven flax and regenerated cellulose (Cordenka) fibre pre-impregnated with commercially available epoxy resins in order to determine static (compressive, tensile, flexural) and dynamic (energy absorption) properties.

2. Experimental procedure

2.1. Materials

This study examined four different natural fibre pre-impregnated (prepreg) fabrics using three different fibres. Lineo FlaxPreg (2 × 2 twill, 200 gsm) (Lineo, Bernay, France) was chosen as a benchmark since it is a commercially available flax prepreg using Araldite LY5150 (Huntsman, Cambridge, UK). Woven flax 2 × 2 twill 420 gsm (Composites Evolution Ltd., Chesterfield, UK) was impregnated with MTM49 (high strength resin) and MTM28 (high toughness resin) (Umeco structural materials, Heanor, UK) at 42 weight per cent. The final fibre was Cordenka rayon (Cordenka GmbH, Obernberg, Germany), a regenerated cellulose fibre 2 × 2 twill at 300 gsm (Cordenka 610F fabric) and impregnated with MTM49 resin (Umeco structural materials, Heanor, UK) at 42 wt.%. All fabrics were kept in dry storage but not specifically conditioned for moisture content.

2.2. Experimental procedures

2.2.1. Static testing

The static test procedures used in this work are the same as reported in previous studies by the authors [32]. Three plaques of each material (30 cm × 30 cm) with fabric all laid with the warp at 0° were vacuum bagged and cured in an autoclave at 0.62 MPa and 120 °C for 60 min. The number of plies in each case varied according to the quantity of material available: Lineo FlaxPreg – 12 plies, cured ply thickness (CPT) 0.340 mm, Biotex MTM49 – 3 plies, CPT 0.525 mm, Biotex MTM28 – 4 plies, CPT 0.525 mm, Cordenka MTM49 – 6 plies, CPT 0.363 mm. Each plaque was cut into samples suitable for tensile, compressive, ILSS and flexural tests. Samples were tested on an Instron 5800R with appropriate calibrated load cells.

2.2.1.1. Tensile strength and modulus. Tensile strength and modulus were determined according to the American Society for Testing and Materials standard ASTM D3039. Five samples 25 × 238 mm were cut from the composite plaques. Aluminium sheet was bonded to each end of the sample at the clamping points leaving a gauge length of 138 mm. The tensile tests were carried out at 2 mm/min and the modulus measured between 0.1–0.3% axial strain.

2.2.1.2. Compressive strength and modulus. Compressive strength was determined according to ASTM D695. Ten samples 12.7 × 79.4 mm were cut from the composite plaques. Aluminium sheet was bonded to each end of the compressive strength samples leaving a gauge length of 4.8 mm. Compressive modulus samples were left bare carbon. The compressive tests were carried out at 1.3 mm/min and the modulus is measured between 0.1–0.3% axial strain.

2.2.1.3. Inter laminar shear strength. ILSS was determined according to ASTM D2344-84. Five samples 20 × 6.35 mm were cut from the composite plaques and subjected to a test at 1.0 mm/min.

2.2.1.4. Flexural strength and modulus. Flexural strength and modulus were determined according to Composites Research Advisory Group standard CRAG 200. Five samples 20 × 6.35 mm were cut from the composite plaques and tested at 5.0 mm/min with a constant span to depth ratio.

2.2.2. Dynamic testing

Previous research has demonstrated that cones are more suitable for impact structures than tubes since they do not require crush initiators [33]. The test cones (Fig. 1) were manufactured using an aluminium mould tool to allow for high dimensional accuracy of the finished components in line with previous work [32]. All cones used the same layup with one ply at 0° and the next at 45° and so on with the seam offset by 10 mm between plies. The total number of plies in each case was Biotex flax – 6, Lineo flax – 8, Cordenka – 8 and they were cured at 0.41 MPa and 120 °C for 60 min. Two cones were manufactured from each material. Each

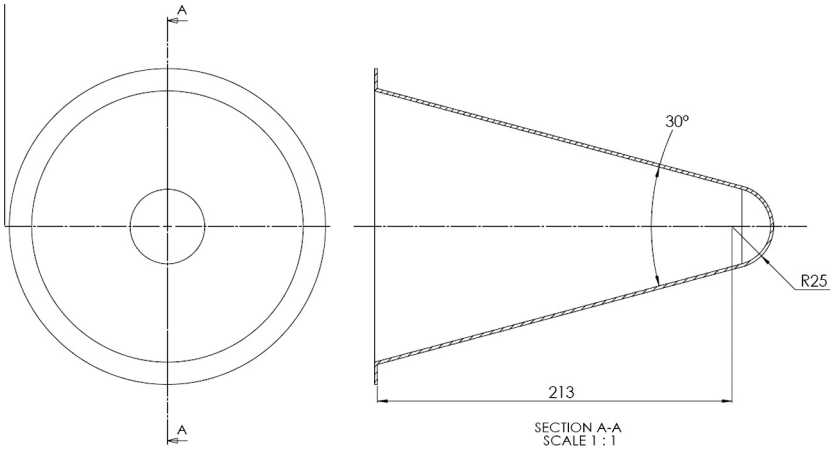

Fig. 1. Engineering drawing of dynamic test specimen.

sample was loaded into a bespoke impact tower (Instron, High Wycombe, UK) and subjected to an impact test at approximately 8.0 m/s with a test mass of 78 kg. Following the impact tests, one cone of each type was used to calculate the specific energy absorption (SEA) by removing all of the damaged material and measuring its mass. The other was sectioned for microscopic analysis of the failure mechanisms.

2.2.3. Analysis

2.2.3.1. Optical microscopy. Optical microscopy was used to measure the void fraction, observe the compressive failure samples and to analyse the fracture surfaces after dynamic tests. For each material a sample was cut from the cured plaque, compressive test specimen, main body of the cone and fracture surface of the cone. The cured plaque samples were cut at 45° to the ply direction (Isomet 5000, Buehler, Dusseldorf, Germany). All samples were then set in EpoFix epoxy resin (Buehler, Dusseldorf, Germany) and polished. They were examined using an Eclipse LV100D (Nikon UK Ltd., Kingston, UK) optical microscope with an high intensity light source (HXP 120, Carl Zeiss Ltd., Welwyn Garden City, UK). Imagery was captured with a 3 Megapixel U-Eye digital imaging camera and void fraction was assessed using AxioVision (Carl Zeiss Ltd., Welwyn Garden City, UK) software. Once the void fraction had been measured the fibre volume fraction was calculated by applying a form of the rule of mixtures. The area of fibre within the plaque was used along with the fabric mass to calculate the fibre volume fraction using the formula below.

$$V_f = V_T - (((M_T - (nAW_F))/\rho_m) + (PV_T))$$

V_f is the fibre volume fraction, V_T is the total volume, M_T is the total mass, n is the number of plies, A is the ply area, W_F is the fabric weight, ρ_m is the matrix density, P is the void%.

2.2.3.2. Scanning electron microscopy. The cured plaque samples used to calculate the void fraction were subsequently gold sputter coated (auto sputter coater, Agar Scientific, Stanstead, UK) and observed using a scanning electron microscope (SEM) (Zeiss Sigma, Carl Zeiss Ltd., Welwyn Garden City, UK).

3. Results and discussion

3.1. Static testing

The static results of the four composite materials are displayed in Table 1. Strength data is plotted in Fig. 2 and moduli in Fig. 3, error bars are set at one standard deviation. Compressive strength of Lineo and Biotex MTM28 are low (86.7 and 77.5 MPa). In contrast the Biotex MTM49 and Cordenka MTM49 have relatively high compressive strength (223.5 and 299.6 MPa). This suggests matrix dominated properties and good compressive strength of MTM49 resin. The MTM28 is a very tough resin which makes it relatively soft. Therefore in compression it provides less lateral support for the fibres so they can buckle more easily. In tension this is not an issue but flexural testing has a compressive element to it so the reduced compression performance also affects the flexural performance. It can be seen that the flexural strength of MTM49 composites range from 173 to 195 MPa, MTM28 153 MPa and the Lineo/Huntsman combination only 57 MPa most likely because of porosity.

Tensile strengths range from 63 to 92.6 MPa. These are fibre dominated and demonstrate that Cordenka composites at 92.6 MPa have a higher strength than the flax composites (63–77.6 MPa). ILSS varies from 10.7 to 23.3 MPa with the highest being MTM49 samples and the lowest for the Lineo/Huntsman material. For reference, carbon fibre (T300) and E glass composites with MTM49 resin have a compressive strength of 800 and 695 MPa, tensile strength 580 and 603 MPa, flexural strength 950 and 770 MPa and ILSS of 81 and 71 MPa respectively [32].

The moduli results (Fig. 3) demonstrate that Biotex and Cordenka with MTM49 and MTM28 are remarkably similar. Lineo performs comparatively poorly in compression and flexion due to its higher porosity. For reference, carbon fibre (T300) and E glass

Table 1
Mean values and comparison of Composites.

	Biotex MTM49	Biotex MTM28	Lineo FlaxPreg	Cordenka MTM49
Compressive strength (MPa)	223.5	77.5	86.7	299.6
Compressive modulus (GPa)	9.6	10.2	6.2	9.3
Tensile strength (MPa)	77.6	63.0	76.5	92.6
Tensile modulus (GPa)	9.3	10.2	11.2	8.9
Flexural strength (MPa)	195.2	153.1	57.0	173.7
Flexural modulus (GPa)	7.0	7.81	2.12	8.3
Interlaminar shear strength (MPa)	23.3	16.4	10.7	19.7

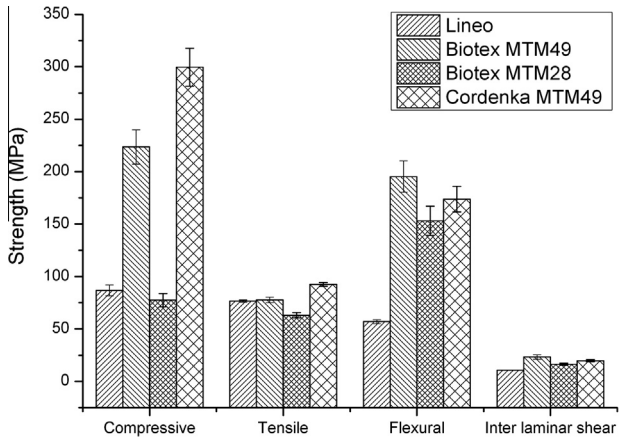

Fig. 2. Strength results for flax and Cordenka prepreg composites.

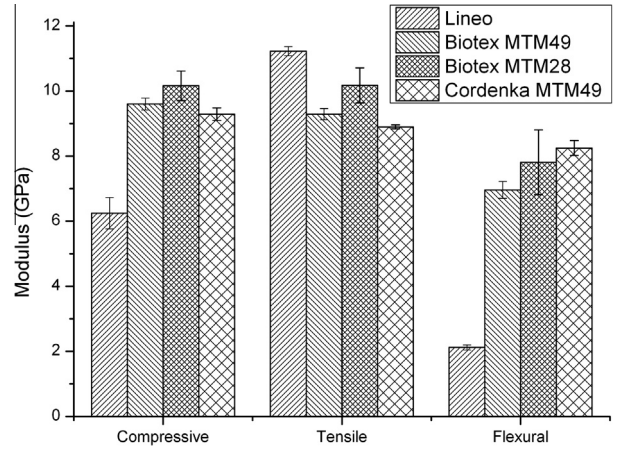

Fig. 3. Modulus results for flax and Cordenka prepreg composites.

composites with MTM49 resin have a compressive modulus of 53 and 33.5 GPa, tensile modulus of 58 and 30.3 GPa and flexural modulus of 54 and 28 GPa respectively [32].

These results compare favourably with previous research. In terms of tensile strength flax epoxy composites have achieved 81–111 MPa [34] although unidirectional flax composites with a synthetic epoxy have reached 174 MPa and with a naturally derived acylated epoxidised soy oil resin 159 MPa [35]. In terms of flexural strength these results (Cordenka MTM49 – 173 MPa) are a significant improvement over other cellulose epoxy samples at 94.7 MPa [36]. Thermoplastic composites PLA/flax and PLA/Cordenka have shown tensile strengths ranging from 42 to 58 MPa and tensile moduli from 3.2 to 6.3 GPa [29]. This compares well with synthetic polypropylene natural fibre composites with tensile strength from 10 to 50 MPa and moduli from 1 to 7 GPa [24]. Although PLA cellulose composites can reach strengths of 92 MPa tensile and 152 MPa flexural [37,38]. Self-reinforced rayon composites have been shown to have a tensile strength of 70 MPa [39].

3.2. Impact testing

The results from impact testing are shown in Table 2. Biotex MTM49 had the highest SEA at 34.2 kJ/kg, followed by Cordenka MTM49 at 23.0 kJ/kg, Lineo at 22.5 kJ/kg and Biotex MTM28 21.2 kJ/kg. There is no correlation between the static compression properties and the SEA which was evident in work on carbon fibre composites [32]. The two materials with the highest compression strength were Cordenka (299.6 MPa) and Biotex MTM49 (223.5 MPa), however these performed very differently. Cordenka failed in a brittle manner (Fig. 4) absorbing energy through pulverisation a lower energy pathway than fronding and friction. The Biotex MTM49 ejected some material in the creation of large fronds suggesting that a debris wedge has formed which is splitting the material both inside and out as it fails, providing higher energy dissipation.

The Lineo flax and Cordenka cone tips can be seen to fracture upon impact demonstrating signs of brittle failure. Whereas the Cordenka composite continued to fail in a brittle manner the Lineo material begins to fail more progressively. Fig. 4 highlights large pieces of Lineo material being ejected from the cone. These appear to be broken off chunks of laminate rather than fronds indicating that the material may have inter-laminar weakness resulting in a low dissipation of energy.

If Biotex is examined alone, then Biotex MTM49 behaves better dynamically than Biotex MTM28 which has a slightly different set of failure mechanisms. Biotex MTM28 ejects very little material and has only internal fronding as a result of the tough MTM28 resin system (Fig. 4). This causes a reduction in the amount of energy absorbed which is surprising since MTM28 with carbon fibre can achieve 60 kJ/kg versus 35 kJ/kg with MTM49. Since the Biotex flax MTM49 combination matches the performance of the carbon fibre MTM49 in terms of SEA it is probable that the bond strength between the resin and the fibre is reduced for MTM28.

3.3. Analysis

3.3.1. Optical microscopy

3.3.1.1. Void and fibre volume fraction. The results of sample analysis by optical microscopy are shown in Table 3. The porosity of natural and cellulose fibre composites is higher than typically seen in glass or carbon composites with a range between 2.4–10.3%. Biotex and Cordenka composites have voidage values that might be expected for natural and cellulose fibre composites, however the Lineo FlaxPreg is high [13,17]. High voidage in the Lineo FlaxPreg is evident throughout this work and suggests that there is insufficient resin in the prepreg.

The difference in voidage between the cured plaques and cones due to their different curing pressures (0.62 MPa versus 0.41 MPa) is small. In the case of the flax materials there is a small reduction

Table 2
Results from dynamic testing of composite cones.

	Biotex MTM49		Biotex MTM28		Lineo FlaxPreg		Cordenka MTM49	
Initial weight (g)	331.3	331.1	322.1	323.5	242.6	241.2	357.7	351.7
Impact velocity (m/s)	8.0	10.3	8.1	8.1	7.9	8.01	7.9	7.0
Peak load (kN)	46.5	48.5	34.7	32.8	34.0	31.0	42.9	37.7
Absorbed energy (kJ)	2.4	4.05	2.5	2.5	2.4	2.5	2.4	2.5
Residual height (mm)	140	99	103	106	94	102	125	133
Residual weight (g)	260.0	–	202.4	–	135.9	–	253.3	–
Specific energy absorption (kJ/kg)	34.2	–	21.2	–	22.5	–	23.0	–

Fig. 4. Still images from impact test.

Table 3
Fibre volume fraction and porosity of impact test specimens measured using optical microscopy.

	Plaque mean porosity (%) (SD)	Plaque mean fibre volume fraction (%)	Cone mean porosity (%) (SD)
Biotex MTM49	4.6 (1.5)	54.1	4.8 (1.7)
Biotex MTM28	3.5 (1.5)	55.2	4.03 (0.7)
Lineo FlaxPreg	10.3 (3.6)	37.2	10.9 (1.5)
Cordenka	2.4 (1.2)	53.0	2.3 (2.4)

in voidage evident at the higher cure pressure. This is due to the compressibility and porosity of the flax fibres which will experience greater compaction at higher pressure resulting in lower voidage and higher fibre volume fraction [40]. The Cordenka fibres demonstrate no reduction in voidage at higher pressure most likely since the fibres behave more like a glass or carbon fibre and are incompressible.

3.3.1.2. Compression samples. None of the compression samples demonstrated any formation of kink bands or fibre failure due to the flexible natural fibres. Fig. 5A highlights the compression failure of Biotex MTM49 with inter (i) and intra-laminar (ii) fractures clearly visible. Fig. 5B elucidates the Biotex MTM28 compressive failure with inter-laminar (i) failure evident. The Lineo FlaxPreg Fig. 5C is visibly more porous (iii) than the other samples with cracks propagating between the voids (iv) and inter-laminar (i) failure within the composite. The Cordenka sample Fig. 5D has the highest compressive strength and exhibited a sudden inter-laminar (i) failure compared with the flax samples which failed progressively. The compressive strength of a composite is

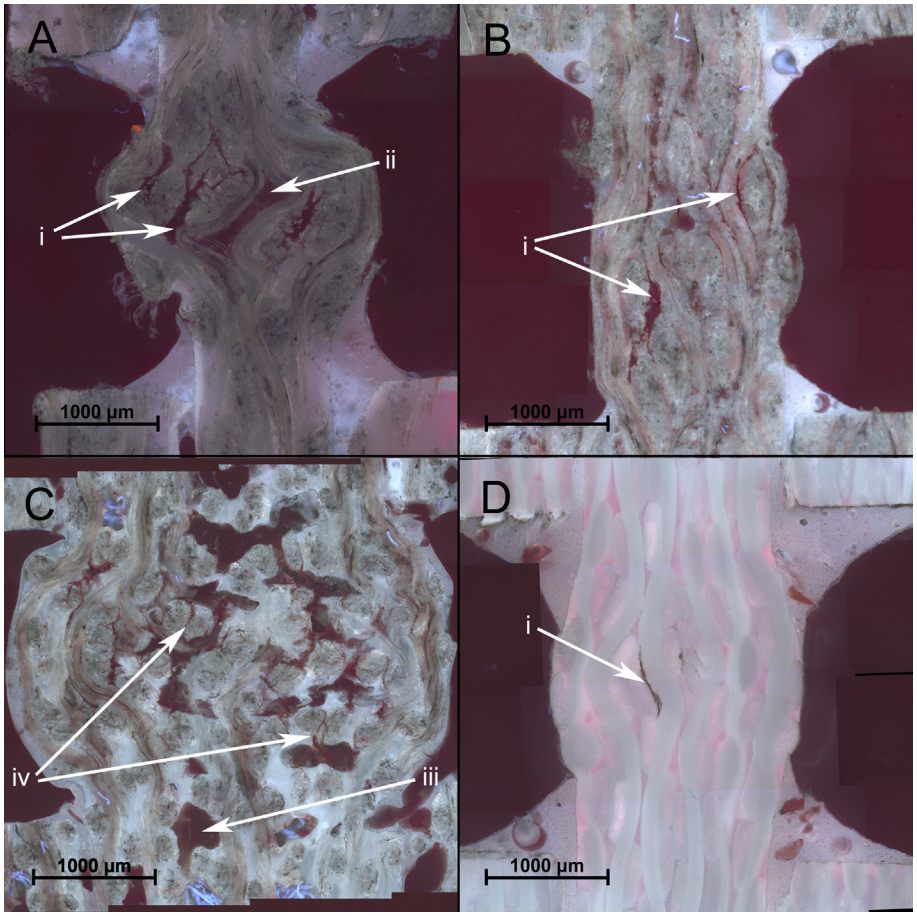

Fig. 5. Optical micrographs of a section through the compression samples: (A) Biotex Flax MTM49, (B) Biotex Flax MTM28, (C) Lineo FlaxPreg, and (D) Cordenka MTM49.

determined by the properties of the resin and the interface between the resin and the fibres, in this case the Cordenka MTM49 is particularly good.

3.3.1.3. Analysis of dynamic test specimens. Analysis of the fracture surface micrographs (Fig. 6) highlights the difference in energy dissipation methods for flax and Cordenka. All of the flax samples demonstrate varying degrees of fronding whereas the Cordenka has experienced brittle failure with energy absorption via pulverisation and mode 1 fracture. Biotex MTM49 is shown in Fig. 6A and highlights inter-laminar (i), intra-laminar (ii) and mode 1 (iii) fracture. Both Biotex MTM49 (A) and MTM28 (B) have some evidence that a debris wedge (iv) has formed helping to absorb energy via friction.

Lineo FlaxPreg in Fig. 6C has significant porosity (v). These voids provide weak areas allowing cracks to propagate between them (vi) and weaken the composite. Cordenka MTM49 in Fig. 6D shows no evidence of fronding, therefore energy has been absorbed through fragmentation of the composite rather than friction between fronds. There is evidence of mode 1 fracture (iii) and inter-laminar failure (i) on the outside wall where flakes of material have fractured off.

3.3.2. SEM

Scanning electron micrographs of polished cross sections of the cured plaque samples are shown in Fig. 7. All of the samples show signs of poor fibre matrix interface which will reduce the potential properties of the composite. The lack of bonding has a number of potential causes such as the waxy layer that covers the cellulose fibres or the polar difference of cellulose fibres and epoxy resin [29,41]. The difference in polarity causes hydrogen bonds to form between the fibres forcing them to group together in collectives which causes dry patches that can become interfacial weak points [42]. Lineo flax Fig. 7C demonstrates large voids within the single fibres and fibre bundles suggesting a processing problem with the raw flax or an incompatibility with the chosen resin system. Biotex MTM49 Fig. 7A and Biotex MTM28 Fig. 7B demonstrate the polygonal shape and differences in cell size as well as the high fibre volume fraction. Fig. 7D displays the more regular Cordenka fibres and how the resin has failed to penetrate throughout the yarn. It also highlights fractures that have occurred after release of cure pressure and further highlight the poor bond between fibre and matrix.

4. Conclusions

An important finding is that Biotex flax combined with MTM49 matches the SEA of T300 carbon fibre using the same resin system at 35 kJ/kg. The use of a tougher resin system (MTM28) with flax was expected to increase the SEA as is the case with carbon fibre composites but in fact it was reduced to 21.2 kJ/kg. This is likely to be because of a reduced bond for this fibre and resin combination. Lineo FlaxPreg demonstrated disappointing results because of its high voidage due to a lack of resin in the prepreg. Cordenka MTM49 had excellent static properties particularly in compression but this did not translate into a high SEA demonstrating only 23 kJ/kg. The material experienced brittle failure dynamically thereby absorbing energy via pulverisation of the material rather than fronding and friction, a more effective mechanism.

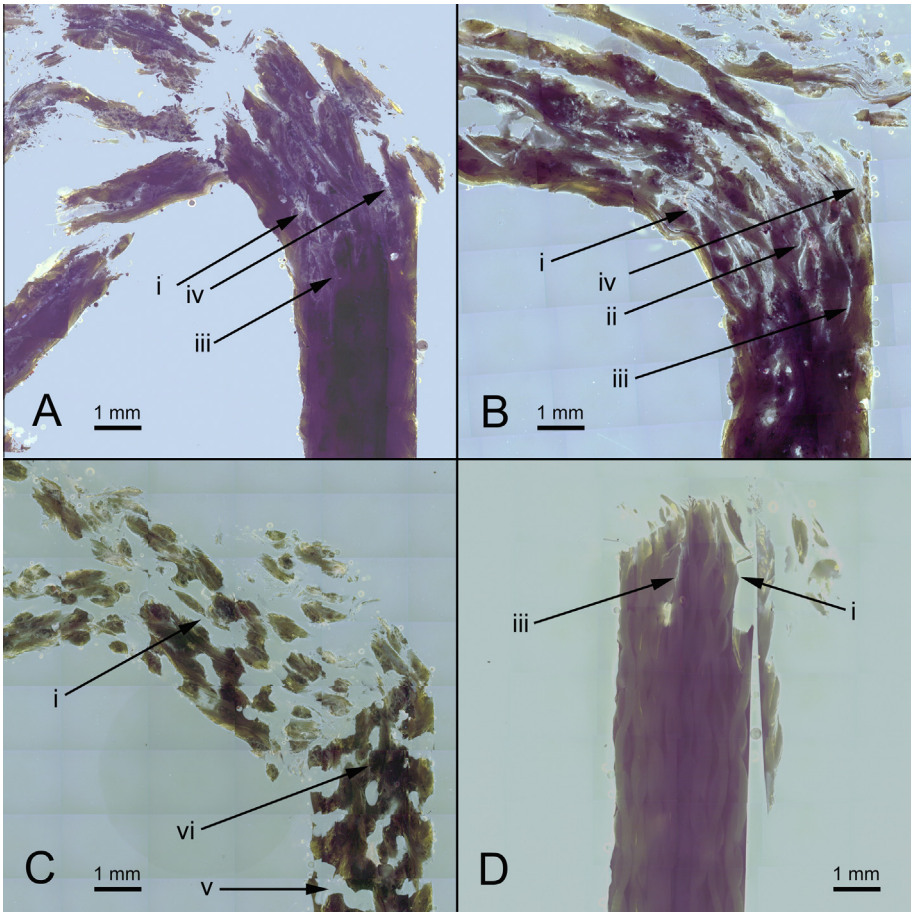

Fig. 6. Optical micrograph of a section through the dynamic failure surfaces (clockwise from top left, Biotex Flax MTM 49 (A), Biotex Flax MTM28 (B), Lineo FlaxPreg (C) and Cordenka (D)).

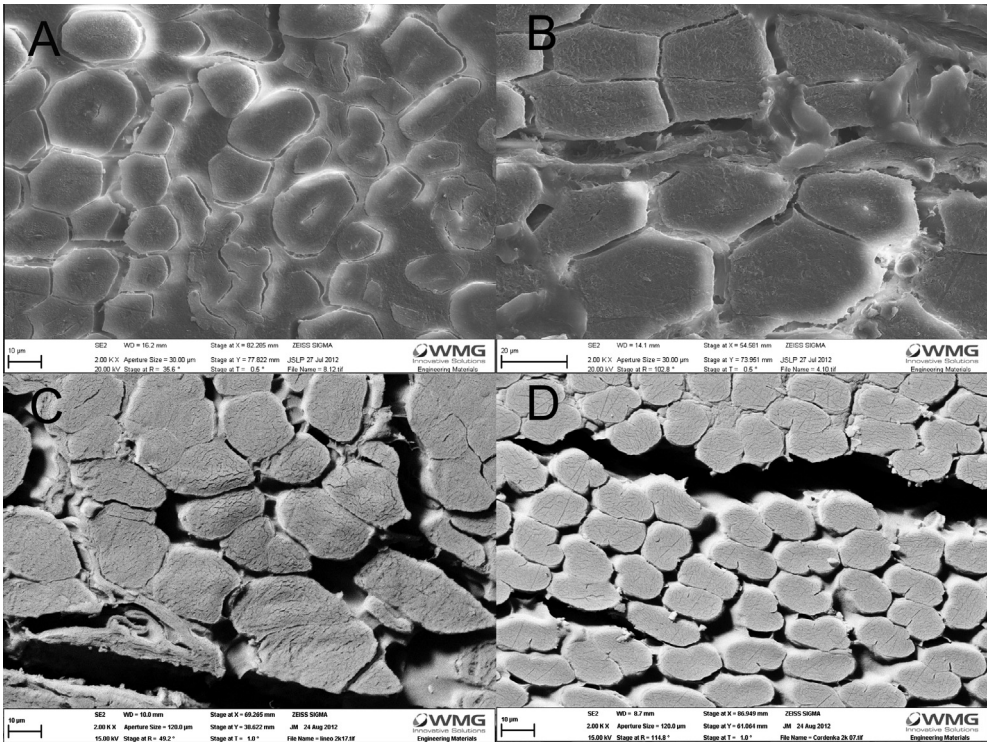

Fig. 7. SEM of Biotex MTM49 (A), Biotex MTM28 (B), Lineo FlaxPreg (C), and Cordenka (D) highlighting the fibre and matrix interface.

Biotex MTM49 and Cordenka MTM49 demonstrated the highest compressive strength at 223.5 and 299.6 MPa respectively compared with Lineo FlaxPreg at 86.7 MPa and Biotex MTM28 at 77.5 MPa. The flexural strength of MTM49 composites range from 173 to 195 MPa, MTM28 153 MPa and the Lineo/Huntsman combination only 57 MPa because of its high porosity. Tensile properties varied from 63 to 92.6 MPa. Tensile properties are fibre dominated and these results demonstrate that Cordenka at 92.6 MPa has a higher strength than the flax materials which range from 63 to 77.6 MPa. ILSS ranged from 10.7 to 23.3 MPa with the highest being MTM49 samples and the lowest for the Lineo/Huntsman material.

All materials had voidage ranging from 2.3% to 10.9%. Cordenka was lowest at 2.3% since the fibres are regularly shaped without a lumen. The void content for the Biotex flax composite ranged from 3.5% to 4.8% and the Lineo FlaxPreg was over 10% highlighting the 'dry' nature of the composite and overall lack of resin. This work has demonstrated that natural fibre composites have significant scope for use in structural applications but additional work is required on fibre to matrix bonding in order to maximise their properties whilst remaining an environmentally credible option.

Acknowledgements

The authors would like to thank Composites Evolution Ltd., Cordenka GmbH (Obernberg, Germany), Umeco Ltd., Lola composites Ltd., the Engineering and Physical Sciences Research Council (EP/E007252/1), Advantage West Midlands and the European Regional Development Fund.

References

[1] Directive 2005/64/EC of the European parliament and of the council of 26 Oct 2005 on the type-approval of motor vehicles with regard to their reusability, recyclability and recoverability and amending council. OJ L 310. p. 10–27.
[2] Akonda MH, Lawrence CA, Weager BM. Recycled carbon fibre-reinforced polypropylene thermoplastic composites. Compos Part A: Appl Sci Manuf 2012;43(1):79–86.
[3] Faruk O et al. Biocomposites reinforced with natural fibers: 2000–2010. Prog Polym Sci 2012;37(11):1552–96.
[4] Dissanayake NPJ et al. Energy use in the production of flax fiber for the reinforcement of composites. J Nat Fibers 2009;6(4):331–46.
[5] Van Dam JEG, Bos HL. The environmental impact of fibre crops in industrial applications. Hintergrundpapier zu: van Dam, JEG, 2004.
[6] Meredith J et al. Natural fibre composite energy absorption structures. Compos Sci Technol 2012;72(2):211–7.
[7] Joshi SV et al. Are natural fiber composites environmentally superior to glass fiber reinforced composites? Compos Part A: Appl Sci Manuf 2004;35(3):371–6.
[8] Van de Weyenberg I et al. Improving the properties of UD flax fibre reinforced composites by applying an alkaline fibre treatment. Compos Part A: Appl Sci Manuf 2006;37(9):1368–76.
[9] La Mantia FP, Morreale M. Green composites: a brief review. Compos Part A: Appl Sci Manuf 2011;42(6):579–88.
[10] Akin DE, Dodd RB, Foulk JA. Pilot plant for processing flax fiber. Ind Crop Prod 2005;21(3):369–78.
[11] Summerscales J et al. A review of bast fibres and their composites. Part 1 – Fibres as reinforcements. Compos Part A: Appl Sci Manuf 2010;41(10):1329–35.
[12] Summerscales J et al. A review of bast fibres and their composites. Part 2 – Composites. Compos Part A: Appl Sci Manuf 2010;41(10):1336–44.
[13] Baley C. Analysis of the flax fibres tensile behaviour and analysis of the tensile stiffness increase. Compos Part A: Appl Sci Manuf 2002;33(7):939–48.
[14] Virk AS, Hall W, Summerscales J. Failure strain as the key design criterion for fracture of natural fibre composites. Compos Sci Technol 2010;70(6):995–9.
[15] Liu Q, Hughes M. The fracture behaviour and toughness of woven flax fibre reinforced epoxy composites. Compos Part A: Appl Sci Manuf 2008;39(10):1644–52.
[16] Hyer MW, Alsop S, editors. Stress analysis of fiber reinforced composite materials. Pennsylvania (USA): DEStech Publications; 2009. p. 695.
[17] Wood BM et al. Use of lignin as a compatibiliser in hemp/epoxy composites. Compos Sci Technol 2011;71(16):1804–10.
[18] George J, Sreekala MS, Thomas S. A review on interface modification and characterization of natural fiber reinforced plastic composites. Polym Eng Sci 2001;41(9):1471–85.
[19] Li X, Tabil L, Panigrahi S. Chemical treatments of natural fiber for use in natural fiber-reinforced composites: a review. J Polym Environ 2007;15(1):25–33.
[20] Kalia S, Kaith BS, Kaur I. Pretreatments of natural fibers and their application as reinforcing material in polymer composites—a review. Polym Eng Sci 2009;49(7):1253–72.
[21] Kabir MM et al. Chemical treatments on plant-based natural fibre reinforced polymer composites: an overview. Compos Part B: Eng 2012;43(7):2883–92.
[22] Zafeiropoulos NE, editor. Interface engineering of natural fibre composites for maximum performance. Woodhead Publishing Ltd.; 2011.
[23] Zafeiropoulos NE et al. Engineering and characterisation of the interface in flax fibre/polypropylene composite materials. Part I. Development and investigation of surface treatments. Compos Part A: Appl Sci Manuf 2002;33(8):1083–93.
[24] Wambua P, Ivens J, Verpoest I. Natural fibres: can they replace glass in fibre reinforced plastics? Compos Sci Technol 2003;63(9):1259–64.
[25] Koronis G, Silva A, Fontul M. Green composites: a review of adequate materials for automotive applications. Compos Part B: Eng 2013;44(1):120–7.
[26] Kessler RW et al. Steam explosion of flax—a superior technique for upgrading fibre value. Biomass Bioenergy 1998;14(3):237–49.
[27] Baley C. Influence of kink bands on the tensile strength of flax fibers. J Mater Sci 2004;39(1):331–4.
[28] Ganster J, Fink H-P. Novel cellulose fibre reinforced thermoplastic materials. Cellulose 2006;13(3):271–80.
[29] Bax B, Müssig J. Impact and tensile properties of PLA/Cordenka and PLA/flax composites. Compos Sci Technol 2008;68(7–8):1601–7.
[30] Sreekumar PA et al. A comparative study on mechanical properties of sisal-leaf fibre-reinforced polyester composites prepared by resin transfer and compression moulding techniques. Compos Sci Technol 2007;67(3–4):453–61.
[31] Rokbi M et al. On experimental investigation of failure process of woven-fabric composites. Compos Sci Technol 2011;71(11):1375–84.
[32] Meredith J et al. Recycled carbon fibre for high performance energy absorption. Compos Sci Technol 2012;72(6):688–95.
[33] Ochelski S, Gotowicki P. Experimental assessment of energy absorption capability of carbon–epoxy and glass–epoxy composites. Compos Struct 2009;87(3):215–24.
[34] Goutianos S et al. Development of flax fibre based textile reinforcements for composite applications. Appl Compos Mater 2006;13(4):199–215.
[35] Spārniņš E, Nyström B, Andersons J. Interfacial shear strength of flax fibers in thermoset resins evaluated via tensile tests of UD composites. Int J Adhes Adhes 2012;36:39–43.
[36] Low IM et al. Mechanical and fracture properties of cellulose-fibre-reinforced epoxy laminates. Compos Part A: Appl Sci Manuf 2007;38(3):963–74.
[37] Bledzki AK, Jaszkiewicz A, Scherzer D. Mechanical properties of PLA composites with man-made cellulose and abaca fibres. Compos Part A: Appl Sci Manuf 2009;40(4):404–12.
[38] Graupner N, Herrmann AS, Müssig J. Natural and man-made cellulose fibre-reinforced poly(lactic acid) (PLA) composites: an overview about mechanical characteristics and application areas. Compos Part A: Appl Sci Manuf 2009;40(6–7):810–21.
[39] Huber T, Pang S, Staiger MP. All-cellulose composite laminates. Compos Part A: Appl Sci Manuf 2012;43(10):1738–45.
[40] Johnson M et al. Improvement of the impact performance of a starch based biopolymer via the incorporation of *Miscanthus giganteus* fibres. Ind Crop Prod 2005;22(3):175–86.
[41] Canché-Escamilla G et al. Flexural, impact and compressive properties of a rigid-thermoplastic matrix/cellulose fiber reinforced composites. Compos Part A: Appl Sci Manuf 2002;33(4):539–49.
[42] Xie Y et al. Silane coupling agents used for natural fiber/polymer composites: a review. Compos Part A: Appl Sci Manuf 2010;41(7):806–19.