Available online at www.sciencedirect.com

SciVerse ScienceDirect

Procedia Engineering 15 (2011) 2869 – 2874

Procedia Engineering

www.elsevier.com/locate/procedia

Advanced in Control Engineering and Information Science

Modeling for Lithium-Ion Battery used in Electric Vehicles

Rui Xiong[a] *, Hongwen He[a], Hongqiang Guo[a], Yin Ding[b]

[a]*National Engineering Laboratory for Electric Vehicles, Beijing Institute of Technology, Beijing, 100081, China*
[b]*Changzhou Institute of New Energy Vehicle Technology, Changzhou, Jiangsu, 213164, China*

Abstract

To improve and better the applicability of lithium-ion battery model in electric vehicles, a new electrochemical-polarization model was put forward for the real-time model-based battery management system and control applications by adding an extra RC network on the basis of the electrochemical model to describe the relaxation effect of the lithium-ion battery, and the open circuit voltage as a function of State of Charge defined by the Nernst model is used in the model to avoid a time-consuming, laborious and even error-prone experiment for specially determining open circuit voltage at several specified SoC values. The model parameters are identified by the least squares method with the experimental data of hybrid power pulse characteristic test on a $LiFePO_4$ battery module. Experiments and simulation results show the new electrochemical-polarization model can simulate the dynamics of battery well. By using the proposed model and parameters identification approach, the time-consuming and complex experiments for model parameters' identification and periodical calibration are avoided.

Selection and/or peer-review under responsibility of [CEIS 2011]

Keywords: electric vehicles; model-based battery management system; lithium-ion battery; electrochemical-polarization model; relaxation effect;

* Corresponding author. Tel.: +86-010-68914842; fax: +86-010-68914842.
E-mail address: xrui_ev@126.com.

doi:10.1016/j.proeng.2011.08.540

1. Introduction

As an energy storage source, the battery is the key to the development of electric vehicles (EVs). The lithium-ion battery is known as the most promising green battery and favored by most new-energy vehicles due to its tremendous advantages such as high-energy density, fast charging and discharging, and safety, etc [1]. With the increased research in the fields of EVs dynamic simulation, energy distribution and power control strategy, as well as the estimation of batteries' state of charge (SoC) and state of health (SoH), nowadays improving the accuracy of the charging and discharging model of power batteries, especially lithium-ion batteries, is a crux research target [2–4].

Since the battery is a nonlinear system, the models usually used in EVs can be divided into two typical kinds: the electrochemical model was proposed based on the electrochemical theory, and can fully describe the characteristics of the battery by using mathematics to describe its inner action [5-7]. However, it can hardly simulate its dynamic performance. Based on the dynamic characteristics and working principles of the battery, the equivalent circuit model (ECM) was developed by using resistors, capacitors and voltage sources to form a circuit network [8-9]. However, for most ECM, OCV (open circuit voltage) is directly measured or estimated in experiments at several specified SoC values. But the determination of the OCV as a function of SoC is time-consuming, laborious and even error-prone in ECM. What's worse, the discrete representation of OCV at several SoC is not convenient and straightforward for Kalman filtering or observer-based SoC estimation techniques.

In this paper, a $LiFePO_4$ battery module with a nominal voltage of 32 V and a nominal capacity of 12 Ah is researched. In the proposed new electrochemical-polarization (EP) model, a relationship between OCV and SoC defined by the Nernst model [7] so that an explicit OCV-SoC relationship can be achieved in any battery loading profiles without conducting a special OCV determination experiment in advance, and the dynamic relaxation effect of the battery can also be depicted through the RC network. The model parameters are identified by the least squares (LS) method. Furthermore, the model's accuracy is validated by DST (dynamic stress test).

2. Models of Lithium-Ion Battery

There are many types of batteries and many factors that affect battery performance. To predict the performance of batteries, many different mathematical models exist, such as the ECM includes Rint model, the RC model, the Thevenin model and the PNGV model, et al and the electrochemical model includes *Shepherd model*, *Unnewehr universal model*, *Nernst model* and *combined model* are now widely used in EVs studies. In order to refine the polarization characteristics of Nernst model or describe the inner action of the Thevenin model for the lithium-ion battery, an improved model named new EP model is proposed herein.

The Schematic diagram for the new EP model is shown in Fig.1. The OCV-U_{oc}, which is depicted by the Nernst model with respect to SoC in which the K_0, $K_1$and K_2 are three constants chosen to make the model fit the data well. R_o is the ohmic resistance and R_p is the polarization resistance. The polarization capacitance C_p is used to describe the transient response during charging and discharging. U_p is the voltages across C_p. The electrical behavior of the model can be expressed by Equation (1).

$$\begin{cases} U_t = U_{oc} - U_p - I_L R_o \\ \dot{U}_p = \dfrac{I_L}{C_p} - \dfrac{U_p}{C_p R_p} \\ U_{oc} = K_0 + K_1 \ln SoC + K_2 \ln(1 - SoC) \end{cases} \tag{1}$$

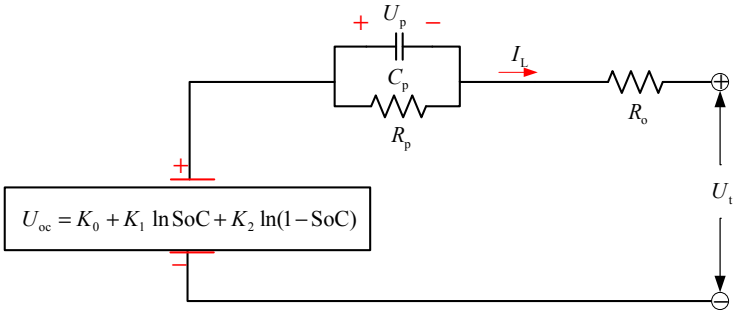

Fig.1 Schematic diagram for the new electrochemical-polarization model.

3. Model Parameters' Identification of a Lithium-Ion Power Battery Module

To identify the model parameters, a battery test bench is designed. The purpose of recognition is based on a criterion and the measurement information of the known systems to estimate the model structure and unknown parameters.

3.1. Experimental Design

The test bench can see in paper [2]. In order to acquire data to identify the model parameters, a Hybrid Pulse Power Characterization (HPPC) [10] test procedure is conducted on the $LiFePO_4$ battery module at 0.1 SoC intervals (constant current C/3 discharge segments) starting from 1.0 to 0.1 and each interval followed by a 2-hour rest to allow the battery to get an electrochemical and thermal equilibrium condition before applying the next. The HPPC current profile is shown in Fig.2(a). The voltage, current and SOC profiles of the HPPC test are shown in Fig.2(b), Fig.2(c), and Fig.2(d). The sampling time is one second.

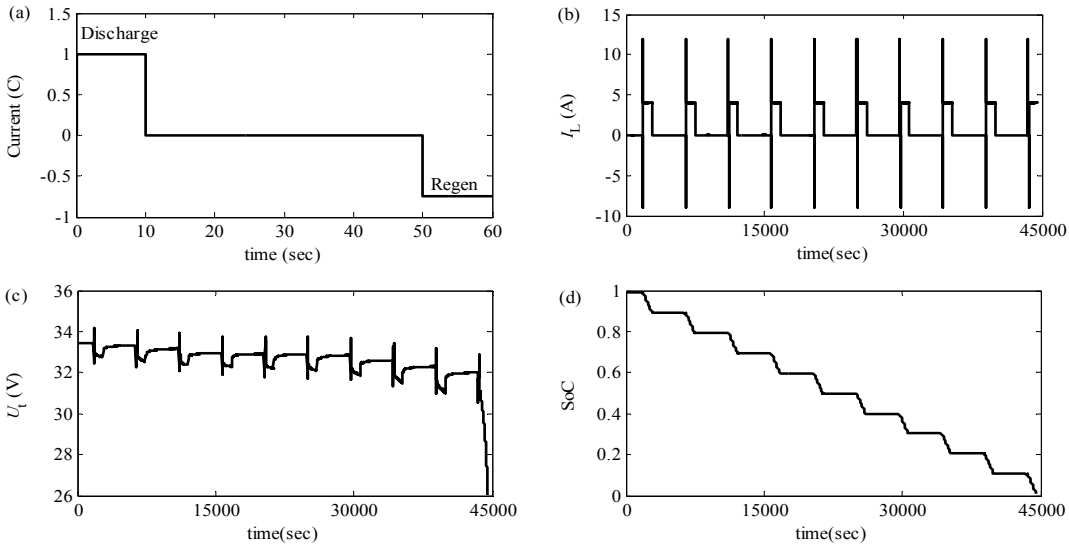

Fig.2. (a) HPPC current profile; (b) Current profiles of the HPPC test; (c) Voltage profiles of the HPPC test; (d) Calculated SoC profiles of the HPPC test;

3.2. Model Parameters' Identification Method

The discrete form of Equation (1) can be achieved by using the first-order backward difference and substituting U_{oc} with $K_0 + K_1 \ln SoC + K_2 \ln(1 - SoC)$:

$$U_t(k) = c_1 + c_2 U_t(k-1) + c_3 \ln(SoC(k)) + c_4 \ln(1 - SoC(k)) + c_5 I_L(k) + c_6 I_L(k-1) \quad (2)$$

Where:

$$c_1 = \frac{TK_0}{T + R_p C_p},\ c_2 = \frac{R_p C_p}{T + R_p C_p}, c_3 = \frac{TK_1}{T + R_p C_p}, c_4 = \frac{TK_2}{T + R_p C_p}, c_5 = -\frac{TR_o + TR_p + C_p R_p R_o}{T + R_p C_p}, c_6 = \frac{C_p R_p R_o}{T + R_p C_p} \quad (3)$$

Where T denotes the sampling intervals and is one second in this paper, herein the model parameters can be calculated as follows:

$$K_0 = \frac{c_1}{1 - c_2}, K_1 = \frac{c_3}{1 - c_2}, K_2 = \frac{c_4}{1 - c_2}, R_o = \frac{c_6}{c_2}, R_p = \frac{c_2 c_5 + c_6}{c_2^2 - c_2}, C_p = \frac{T_s c_2^2}{c_2 - c_2^2} \quad (4)$$

Given a set of N cell input–output three-tuples $\{y(k) \quad I_L(k) \quad SoC(k)\}$, the parameters may be solved for in closed form using a result from least-squares estimation. This simple off-line (batch) method is as follows: We first form the vector:

$$\mathbf{Y} = [y(1) \quad y(2) \quad \cdots \quad y(N)]^T \quad (5)$$

And the matrix:

$$\mathbf{H} = [\varphi(1) \quad \varphi(2) \quad \cdots \quad \varphi(N)]^T \quad (6)$$

$$\boldsymbol{\varphi}(k) = [1 \quad U_t(k-1) \quad \ln(SoC(k)) \quad \ln(1 - SoC(k)) \quad I_L(k) \quad I_L(k-1)]^T \quad (7)$$

Then, we see that $\mathbf{Y} = \mathbf{H}\boldsymbol{\theta}$, where $\boldsymbol{\theta} = [c_1 \quad c_2 \quad c_3 \quad c_4 \quad c_5 \quad c_6]^T$ is the vector of unknown parameters. Using a result from least-squares estimation theory, we solve for the parameters $\boldsymbol{\theta}$ using the known matrices $\mathbf{Y}$. and $\mathbf{H}$. as $\boldsymbol{\theta} = (\mathbf{H}^T\mathbf{H})^{-1}\mathbf{H}^T\mathbf{Y}$.

3.3. Identification Results

The identification result is shown in Tables 1.

Table 1. The identification results of the new EP model

K_0	K_1	K_2	R_p (Ω)	C_p (F)	R_o (Ω)
35.642	1.9077	0.5171	0.3718	123.245	0.0748

The comparison curves of the terminal voltage between the experimental data and the model-based estimated values are drawn as shown in Fig.3. Fig.3 shows the proposed New EP model can give good terminal voltage estimation, and the max error is less than 0.5V (Nominal voltage is 32V).

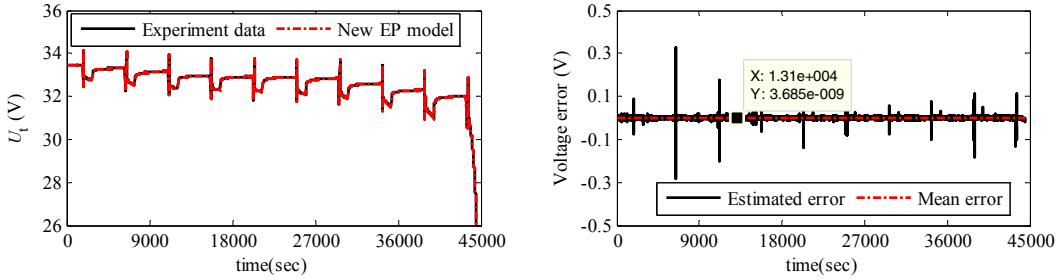

Fig.3 The terminal voltage and its error profiles between the estimated values and experiment data

4. Verification

The DST (Dynamic Stress Test) uses a 360 second sequence of power steps with seven discrete power levels [11]. The DST is a typical driving cycle which is often used to evaluate various battery models and SoC estimation algorithms. In this paper, six consecutive DST were employed to evaluate the proposed battery model, and the sampled current profiles are shown in Fig.4(a), the terminal voltage profiles and SoC profiles are shown in Fig.4(b).

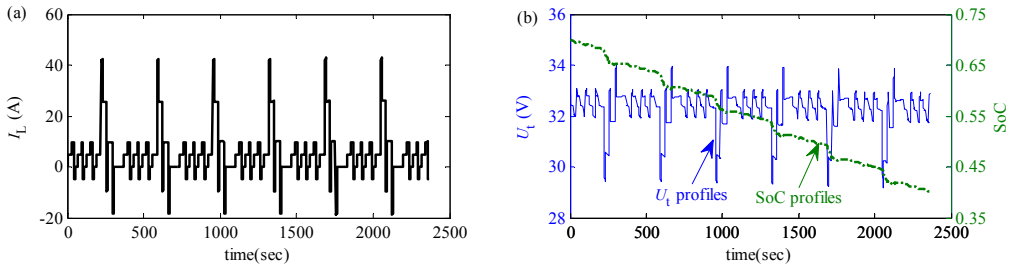

Fig.4 (a) DST current profiles; (b) Voltage and SoC profiles of the HDST test (SoC=0.4~0.7);

Based on the proposed parameters identification approach, the model parameters is shown in Table 2.

Table 2. The identification results of the new EP model

K_0	K_1	K_2	R_p (Ω)	C_p (F)	R_o (Ω)
33.007	0.4189	0.0336	0.3109	169.252	0.0745

The comparison curves of the terminal voltage between the experimental data and the model-based simulation data with the model parameters identified from the DST data is drawn as shown in Fig.5.It shows the new EP model has a good dynamic performance, and its maximum error rate is less than 1%.

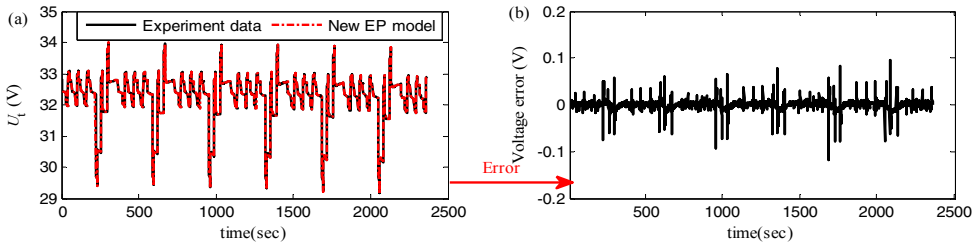

Fig.5 The comparison curves of the terminal voltage between the experimental data and the model-based simulation data

Conclusion

A new electrochemical polarization model is put forward by adding an extra RC circuit to the Nernst model simulating the electrochemical characteristics and polarization effect. Experiments and simulation results indicate the proposed new EP model has good dynamic performance and gives more accurate terminal voltage estimation. A parallel RC network is used in the model structure to describe the relaxation effect of the battery, which is simple and effective. By employing the offline parameters identification approach based on the data saved last times can solve the time-consuming and complex experiments of periodical calibration for correcting the error of the models.

The future work will be focused on Extended Kalman filtering (EKF) or other model and observer-based SoC estimation approaches.

Acknowledgements

We would like to express our deep gratitude to Mr. Xiaosong Hu in Beijing institute of technology for many helpful discussions. The financial support from the National High Technology Research and Development Program of China (No. SQ2010AA1123040001) and from the research foundation of National Engineering Laboratory for Electric Vehicles is gratefully acknowledged.

References

[1] Kennedy B, Patterson D, Camilleri S.Use of lithium-ion batteries in electric vehicles. *J Power Sour* 2000; 90: 156–162.

[2] Hongwen H, Rui X, Jinxin F. Evaluation of Lithium-Ion Battery Equivalent Circuit Models for State of Charge Estimation by an Experimental Approach. *Energies* 2011;**4**:582–598.

[3] Rui X, Hongwen H, Yi W, et al. Study on ultracapacitor-battery hybrid power system for PHEV applications. *High tech letters* 2010,**16**:23-28.

[4] Lee S, Kim J, Lee J, Cho B. State-of-charge and capacity estimation of lithium-ion battery using a new open-circuit voltage versus state-of-charge. *J Power Sour* 2008; **185**:1367-1373.

[5] Plett G L. LiPB Dynamic Cell Models for Kalman-Filter SOC Estimation. *Proceedings of the 19th International Electric Vehicle Symposium* 2009, Busan,Korea, pp.193-204.

[6] Plett G L. Extended Kalman filtering for battery management systems of LiPB-based HEV battery packs:Part 2. Modeling and identification. *J Power Sour* 2004; **134**: 262–276.

[7] ThermoAnalytics Inc., Battery modeling by ThermoAnalytics Inc.http://www.thermoanalytics.com/support/publications/battery modelsdoc.html.

[8] Caiping Z, Chengning Z, Sharkh S.M. Estimation of Real-Time Peak Power Capability of a Traction Battery Pack Used in an HEV. *Proceedings of IEEE Asia-Pacific Power and Energy Engineering Conference (APPEEC)* 2010, Chengdu, China, pp. 1-6.

[9] Johnson V. Battery performance models in ADVISOR, *J. Power Sour* 2002; **110**:312-329.

[10] Idaho National Engineering & Environmental Laboratory. *Battery Test Manual for Plug-In Hybrid Electric Vehicles*. Assistant Secretary for Energy Efficiency and Renewable Energy (EE) Idaho Operations Office: Idaho Falls, ID, USA, 2010.

[11] USABC and DOE National Laboratories personnel. *ELECTRIC VEHICLE BATTERY TEST PROCEDURES MANUAL-revision 2.* Argonne National Laboratory (ANL), Idaho National Engineering Laboratory (INEL) and Sandia National Laboratories (SNL), 1996.