Propulsion and Power Research 2013;2(3):188–193

http://ppr.buaa.edu.cn/

Propulsion and Power Research

www.sciencedirect.com

ORIGINAL ARTICLE

Design and experiments of plasma jet igniter for aeroengine

Yubo Guan*, **Guorui Zhao**, **Xinying Xiao**

AVIC Shenyang Engine Design and Research Institute, Shenyang, Liaoning 110000, China

Received 8 May 2013; accepted 17 June 2013
Available online 27 August 2013

KEYWORDS

Aeroengine;
Plasma;
Igniter;
Jet;
Ignition

Abstract A plasma jet ignition technology was studied for aeroengine combustor. The advantages of compact structure and advanced performance of air-cooled plasma jet igniter had been tested and verified in the opening test. The plasma jet igniter could produce a continuous plasma jet, stable and reliable ignition. The influence factors of plasma jet ignition aerodynamic and structure were studied in the opening test. Continuous plasma jet was closely related to inlet pressure and flow, simultaneously to the igniter nozzle geometry and throat size. Based on the stable continuous plasma jet, some methods were explored in order to reduce plasma output power, optimize the structure design, and improve the thermal protective. The plasma jet igniter applied to aeroengine combustor was identified initially. For combustion chamber with the igniter, altitude ignition performance were experimented for the inlet pressure of plasma ignition from 10 kPa to 50 kPa, the flow of plasma jet not more than 0.20 g/s, and energy output of ignition from 800 W to 1500 W. The test results were compared with that of conventional aeroengine high energy ignition system. The results show that the plasma jet igniter is better than the conventional one.

1. Introduction

The main function of the ignition system was starting ignition for aeroengine main combustion chamber or afterburner. The aeroengine engine was started on the ground and/or at high altitudes, or under normal circumstances, in addition, starting on the ground conditions was relatively easy. When the aeroengine combustion chamber flameout occurred during flight, reliability of a relight system was

*Corresponding author.
E-mail address: gyb606@163.com (Yubo Guan).
Peer review under responsibility of National Laboratory for Aeronautics and Astronautics, China.

Production and hosting by Elsevier

2212-540X © 2013 National Laboratory for Aeronautics and Astronautics. Production and hosting by Elsevier B.V. All rights reserved.
http://dx.doi.org/10.1016/j.jppr.2013.07.005

particularly important at high altitudes where low entrance pressure and temperature conditions exist while the engine was "windmilling" [1]. In addition, during afterburner operation or during non-optimized flight regimes, for example, shorten takeoff distance or in emergency pursuit and retreat, the afterburner was ignited fast. Therefore, the ignition performance of aeroengine combustion chamber was the direct effect of aeroengine, the aircraft flight safety and combat capability [2]. Advanced ignition system shall improve the ignition performance of aeroengine combustion chamber, namely the ignition boundary of the engine combustion chamber was widening and ignition altitude of the aircraft was improved.

In a conventional high energy igniter, the major ignition mechanism was thermal, and plasma-generated radicals played a secondary role. The advantages of a plasma jet igniter accrue from the chemical effects due to plasma-generated radicals, mostly hydrogen atoms, and aerodynamic effects due to increased penetration depth and increased turbulence levels as the high velocity plasma kernel travels through the fuel and air mixture. Both these plasma enhanced chemical and aerodynamic effects were complementary and lead enhanced ignition capability over a wider range of temperature and pressure conditions as compared to a conventional high energy igniter [1,3]. Therefore, the ignition performance of plasma jet igniter is better than the conventional one. The plasma jet igniter is especially suitable ignition for thin fuel-air mixture, low calorific value gas mixing, low volatile and solid fuel.

2. Design of plasma jet igniter

2.1. Plasma and plasma arc

Plasma was the form of existence, and this state was also known as the fourth state of matter. A gas is generally ionized (ionization degree $>0.1\%$), because positive and negative ion of the gas was equal in number, and the gas was known as plasma. The plasma has characteristics of the conductive and magnetic, so the position, shape and movement of plasma are controlled by magnetic field [4]. Plasma generated by the arc is called arc plasma, also plasma arc. Plasma arc is an outcome which changes electrical energy into heat energy. The plasma arc was compressed by the mechanical, thermal and magnetic as it flows through a narrow holes, the plasma arc was changed to the higher flame stream of energy, temperature, strength and speed [5]. Therefore, the plasma jet is especially suitable for the ignition for aeroengine combustion chamber.

2.2. Structure characteristics

The design of the plasma jet igniter with non-transfer plasma arc could work stably and reliably. Working medium was air, and the inlet pressure was less than 50 kPa. The flow of plasma jet was less than 0.20 g/s, the consumed power was less than 1500 W. The design of the plasma jet igniter has the characteristics of compact structures, and the maximum diameter of the working segment was less than 15 mm. Dimensions, weight of the plasma jet igniter is similar to those of the igniter of existing combustion chamber. The plasma jet igniter without changing the existing structure of combustion chamber, it is possible to be interchangeable with the currently used igniter. The gas line of igniter was connected to use a metal sphere and cone-shaped interface through threaded fasteners, and it was sealing reliability. The ignition cable was used of high tension cable for aeroengine. Two poles insulation voltage of the igniter is greater than 10 kV.

Design of the plasma jet igniter was illustrated in Figure 1. Shown in the figure was an optimized structure, and had undergone many modifications and repeated verification.

The igniter includes a specially machined center the cathode assembly 5 and an outer the anode firing tip casing (includes the nozzle 1 and the shell 7) which permits evaluation of plasma formation and plasma effects for various electrode gaps (adjust for the throttle link 3 and the mat 4) and throat gaps the nozzle 1.

The throttle link 3 was made of insulation material, and was isolated to the cathode and to the anode. The inlet flow was controlled by holes and diameter of the throttle link and was affected to plasma jet formation.

The center cathode assembly 5 of the igniter was centered by insulation cover 6. The insulation cover 6 was held against a shoulder on the cathode assembly 5 by the compression nut 8. It maintains the axial position of the joining part that the insulation tube 9 was screw thread.

The shape of the plasma cavities 2 in Figure 1 represents a compromise between several variables affecting life of the igniter and an optimum volume for several reactions necessary to form the plasma and eject from the igniter. The most of sensitive parameter in this regard was the size of the nozzle 1, other parameters remaining constant.

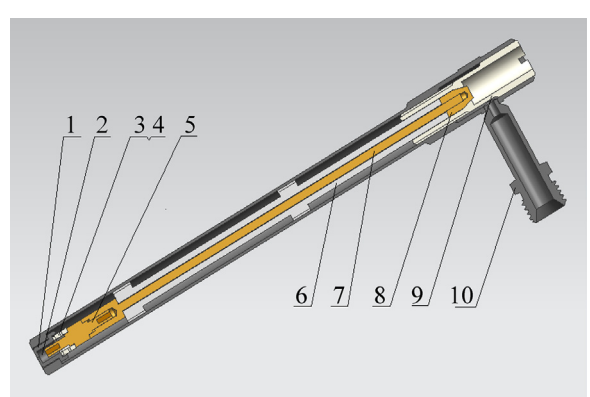

Figure 1 Structure diagram of the plasma jet igniter.

2.3. Key components

The nozzle 1 of the igniter was one of the key components in Figure 1. A schematic sectional view of the nozzle 1 of the igniter was shown in Figure 2, and size marked in the figure had certain effect on the performance of the plasma jet. The nozzle throat diameter size (Φd in Figure 2) was the most obvious. To determine the other structure and size, the relationship between the nozzle throat size and the plasma jet performance was focused on [6].

To design the nozzle throat diameter, the flow of the nozzle throat was estimated by the following formula:

$$W = \mu \times K \times \frac{P}{\sqrt{T}} \times A \times q(\lambda) \tag{1}$$

In the formula:

$$K = \sqrt{\frac{k}{R}\left(\frac{2}{k+1}\right)^{\frac{k+1}{k-1}}}$$

where

k = the adiabatic index
R = the gas constant
μ = the flow coefficient
P = air pressure/Pa
T = the temperature/K
A = flow area of the nozzle throat/m^2
$q(\lambda)$ = aerodynamic function, where λ denotes air flow coefficient of the nozzle throat.

The flows of different nozzle throat size on the variation range of a certain intake pressure were estimated to use Eq. (1). A group of the nozzle having a representative flow characteristic was conducted on the opening test. Calculation results and experimental measurement data were shown in Table 1, Table 2 and Table 3.

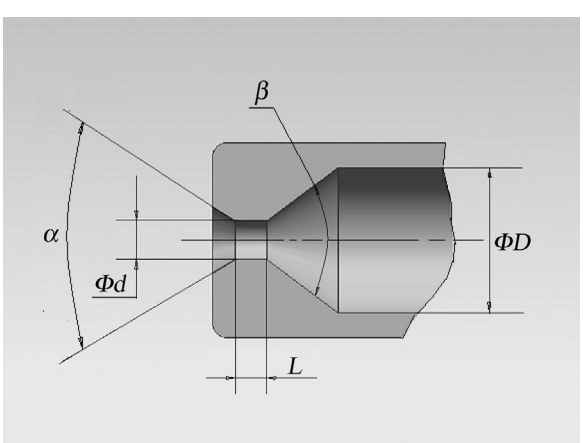

Figure 2 Schematic sectional view of the nozzle.

Table 1 Test data of the nozzle throat diameter 0.6 mm.

Case	Pressure/ MPa	Reference flow/(g/s)	Test flow/(g/s)	Power/ kW	Jet long/ Mm
1	0.041	0.044	0.02	0.53	35
2	0.049	0.049	0.03	0.72	30
3	0.062	0.053	0.04	0.86	20
4	0.069	0.057	0.05	0.91	12
5	0.098	0.068	0.06	1.11	8

Table 2 Test data of the nozzle throat diameter 1.0 mm.

Case	Pressure/ MPa	Reference flow/(g/s)	Test flow/(g/s)	Power/ kW	Jet long/ Mm
1	0.005	0.043	0.03	0.65	55
2	0.011	0.061	0.06	0.80	60
3	0.019	0.086	0.07	0.92	35
4	0.030	0.105	0.08	1.15	25
5	0.039	0.121	0.09	1.43	15
6	0.051	0.135	0.10	1.62	15
7	0.062	0.148	0.13	1.74	15
8	0.070	0.159	0.13	1.92	10
9	0.078	0.169	0.15	1.98	10
10	0.101	0.188	0.17	2.25	8
11	0.112	0.236	0.19	2.51	5

Table 3 Test data of the nozzle throat diameter 1.5 mm.

Case	Pressure/ MPa	Reference flow/(g/s)	Test flow/(g/s)	Power/ kW	Jet long/ Mm
1	0.049	0.098	0.06	0.96	25
2	0.011	0.138	0.11	1.19	30
3	0.018	0.194	0.22	1.34	25
4	0.031	0.237	0.29	1.56	20
5	0.049	0.273	0.43	1.82	15
6	0.061	0.304	0.51	1.98	10
7	0.079	0.381	0.57	2.22	10
8	0.108	0.445	0.75	2.74	8
9	0.131	0.486	0.85	3.01	5
10	0.148	0.529	0.96	3.40	5

3. The opening test

The opening tests mean that igniter that was installed in a special test bed and exposed in the atmosphere was checked whether it could generate plasma jet. That was, the plasma jet igniter was tested in a given inlet pressure, output current of the plasma power device, the performance of plasma jet igniter was examine plasma formation and the changes in the total power consumption.

3.1. Introduction of test-bed

Plasma jet igniter test-bed consists of four systems: the intake system, electrical and control system, measurement

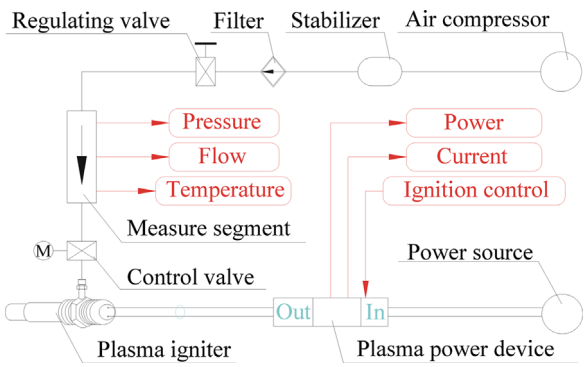

Figure 3 The principle diagram of test-bed.

segment and auxiliary system, and the principle diagram of test-bed was shown Figure 3.

Intake system mainly includes the following parts: air source, stabilizer, air filter, regulator valve, control valve. Gas source provides the gas required for the opening tests, which relies on a small air compressor. Between the air compressor and the stabilizer, the stabilizer was filled with air in the air compressor starting to establish the automatic pressure retention process, the intake pressure of the test stable. Air filter can be separated from the liquid water, the liquid droplets and dust in the gas source, and solid impurities was filtered off to ensure the quality of the test intake air. The regulating valve was adjusting the inlet pressure of the test in order to achieve the test requirements. Control valve controls the test gas supply.

Electrical and control system includes the following parts: the ignition power devices, the ignition timing control, and the ignition cable.

The plasma power device was AC220 V, 50 Hz of input voltage and maximum 16 A of input current. The output current can be adjusted continuously from 10 A to 40 A. Ignition timing control with programmable controller could control the intake of plasma ignition and ignition time, and so on.

Measuring segment mainly includes inlet parameters measurement of pressure, flow, temperature and electrical parameters of power supply voltages, currents and plasma output power, current, and so on.

3.2. Test methods

As the air compressor was started, the stabilizer was filled with air in the air compressor to maintain the stability of the intake pressure for experiment automatically.

Open the control valve, the inlet predetermined pressure of the test was adjusting by the regulating valve, which was watched pressure display numerical, and keep the basic stability. Then adjust the output current of plasma power device to a predetermined value, confirmed that the test state regulation was completed.

Starting ignition timing control, ignition timing in accordance with the following way: first turned on the control valve the inlet control valve for 10 seconds, and then turned on the plasma power supply control switch for 15 seconds, and turned off the plasma power device. The formation process of plasma jet for ignition 15 seconds was observed, and simultaneous noted these parameters of pressure, flow, temperature, input voltage/current of the plasma power device, firing output power and current. And then blowing cold for 60 seconds, restart ignition timing, shall be repeated for three times, three times during working plasma power device for 15 seconds, had a continuous and stable plasma jet was successful, otherwise not successful.

3.3. Date and analysis

The design of plasma jet igniter was finished, and the igniter was verified for the opening test on the test bed whether the igniter could produce continuous stable plasma jet. The test was conducted in accordance with the requirements of the previous section.

The performance of plasma jet igniter structure was verified with the opening test to determine the optimal structure scheme.

The test results were classified and analysed, shown the test results of the three nozzle throat sizes, and the specific contents of the test data were shown in Table 1, Table 2 and Table 3.

The test data of plasma jet ignition performance in the table was basically suitable for aeroengine combustion chamber, and can make reference to the study of plasma ignition technology for aeroengine.

The test data in the table drew characteristic performance curves of inlet pressure and output power, flow and power output, nozzle throat diameter and output power/inlet pressure. These curves were shown in Figure 4, Figure 5 and Figure 6.

A group of photo plasma jet as the nozzle throat diameter 1.0 mm was selected to analyze the test results, which were shot on the opening test, shown in Figure 7, Figure 8 and Figure 9.

Figure 4 shows that the nozzle throat keeps constant, the output power of plasma jet igniter increases with the igniter

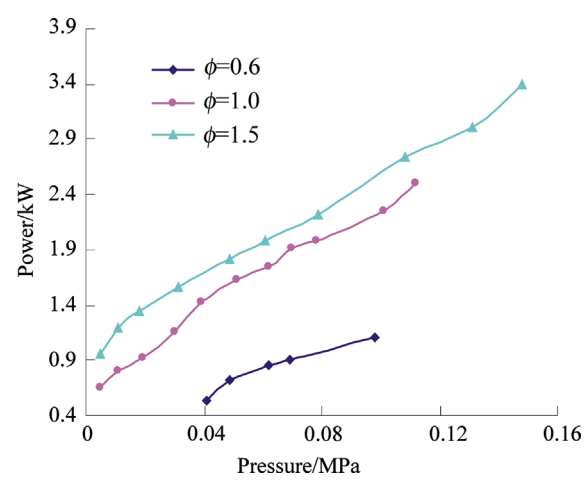

Figure 4 The influence of intake pressure on the power output.

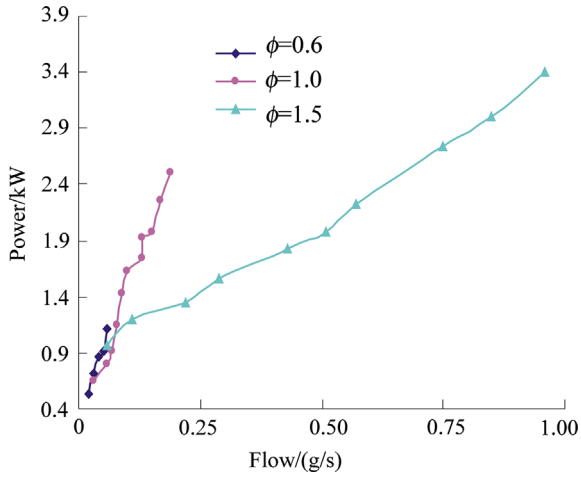

Figure 5 The influence of intake flow on the power output.

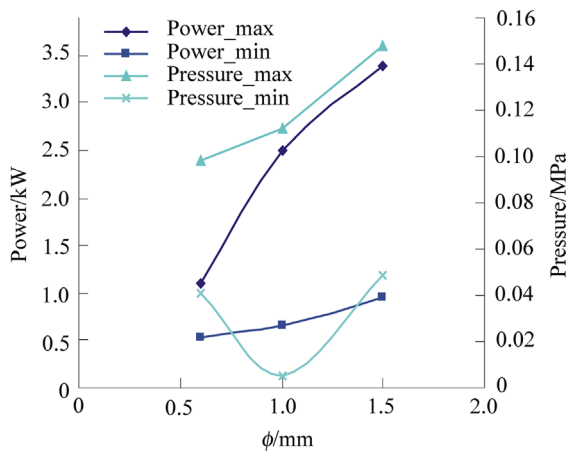

Figure 6 The influence of the nozzle throat diameter on the power output/the intake pressure.

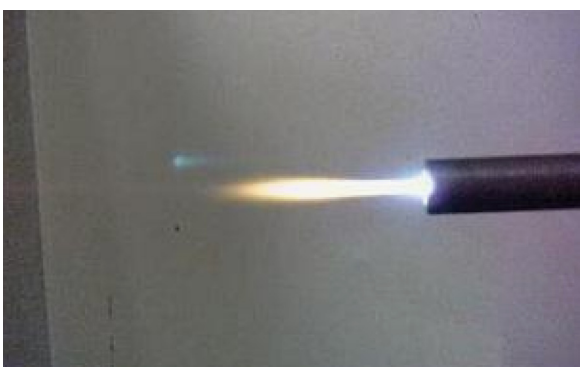

Figure 7 Plasma jet as the inlet pressure 10 kPa.

of inlet pressure. While the inlet pressure of igniter keeps relatively constant, and larger nozzle throat diameter increases the output power.

Figure 5 shows that the inlet flow of igniter keeps relatively constant, and the effect of plasma jet nozzle throat size was more evident on the output power. Smaller the nozzle throat, the output power of plasma jet igniter was greater, whereas the smaller.

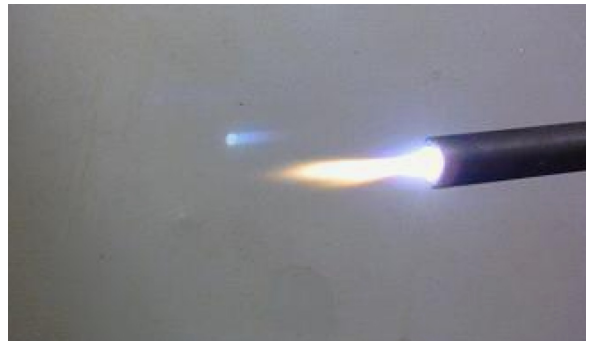

Figure 8 Plasma jet as the inlet pressure 20 kPa.

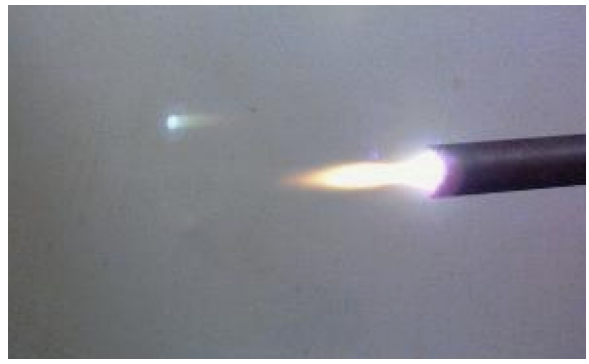

Figure 9 Plasma jet as the inlet pressure 30 kPa.

Figure 6 shows the change in the output power/the intake pressure with three different nozzle throats as the plasma jet igniter generates a stabilized plasma jet. The working range of the nozzle throat diameter 1.0 mm of the igniter to generate a plasma jet was wider. Under certain conditions, the nozzle throat diameter of plasma jet igniter allowed by the energy density of the plasma stream there was a limit, the nozzle of plasma jet igniter would not flame stream discharged after the limit was exceeded. Conversely, the energy density of the plasma stream was too low to flame ejection, the results were easy to understand.

Figure 7, Figure 8 and Figure 9 indicate the nozzle throat diameter 1.0 mm of plasma jet igniter, and ignition intake pressure 10 kPa, 20 kPa, 30 kPa shooting photos of the plasma stream. In the picture, it is more clearly shown that the nozzle throat keeps constant, when the inlet pressure of the plasma jet igniter increases, the length of the plasma jet becomes shorter, and smaller capacity, and with output power becomes greater. Therefore, the flame energy was more concentrated, high temperature, good rigidity.

Based on the test results, it can be obtained: the output power of plasma ignition can be controlled by the plasma jet igniter nozzle throat size and inlet pressure.

The use of plasma jet igniter for aeroengine combustor high altitude ignition performance test was identified initially. The nozzle throat diameter 1.0 mm of igniter was selected, the inlet pressure of the plasma ignition was from 10 kPa to 50 kPa, and the flow of plasma jet was not more than 0.10 g/s, and the range of ignition energy output

Table 4 Test data of ignition performance comparison.

Parameter		State		
		1	2	3
Height	(unit: km)	15	15	18
Mach number	(unit: M)	0.7	0.9	1.2
Total air flow	(unit: kg/s)	3.02	3.58	3
Total pressure 1	(unit: kPa)	52.8	64.4	57.5
Total temperature 1	(unit: K)	832	882	980
Flow rate 1	(unit: kg/s)	1.5	1.77	1.49
Total pressure 2	(unit: kPa)	48.7	62.5	55.8
Total temperature 2	(unit: K)	357	378	419
Flow rate 2	(unit: kg/s)	1.52	1.8	1.5
Lean-oil boundary	(unit: g/s)	8.6	12.3	10
Lean-oil boundary (plasma igniter)	(unit: g/s)	8.2	8.2	9.3
Rich-oil boundary	(unit: g/s)	19.1	17.8	15.4
Rich-oil boundary (plasma igniter)	(unit: g/s)	25.5	31.2	25.5

was from 800 W to 1500 W, and stable plasma jet could produce.

Significant performance advantages compared with the other two igniter test results, the range of operating conditions, power consumption and jet shape.

4. Ignition performance comparison

For appraisal the ignition performance of plasma jet igniter, selected plasma jet igniter was experimented on combustion chamber altitude ignition performance that compared with a conventional high-energy semiconductor sparking plug ignition system for aeroengine.

Because of the space of the plasma-producing cavity of plasma jet igniter was narrow, resulting in thousands of K or more of the temperature of the plasma stream ejected from the nozzle to form a high temperature flame, at very high speeds, and to withstand extremely high thermal load occurs, and to be inserted into the combustion chamber, and the temperatures of combustion chamber was more than 1000 K, after the success of the ignition. In order to protect the igniter from the high-temperature gas erosion, prolong the service life of the igniter. In the ignition section increases the exhaust hole, strengthens the cooling effect, play a protective role.

The test was completed in the combustion chamber segment tester, using a certain type of engine combustion chamber fan-shaped test piece, the test status and test results were shown in Table 4.

The test results showed that the ignition boundaries of plasma jet igniter were generally wider than the one of a conventional high-energy semiconductor sparking plug ignition system. Especially, the ignition fuel flow of plasma jet igniter was nearly twice as much as that of conventional high-energy semiconductor sparking plug ignition system in the oil-rich boundary. Consequently, the plasma jet igniter showed slightly better performance than the conventional one.

5. Conclusions

In-depth research and analysis of ignition mechanism and structure have been conducted for plasma jet igniter. The test results on the opening test and the altitude ignition performance test show that the ignition performance of plasma jet igniter is effective and superiority. The ignition output power is controlled by the nozzle throat size and inlet pressure of plasma jet igniter.

The test data can make reference for the study of plasma ignition technology for aeroengine.

Acknowledgment

The study is all supported by Aviation Science Foundation of Aviation Industry Corporation of China, and the authors are grateful to the participants of Shenyang Engine Research Institute of China for their help.

References

[1] F.B. Carleton, I.M. Vince, F.J. Weinberg, Energy and radical losses from plasma jet igniters to solid surfaces, in: 9th Symposium (International) on Combustion, the Combustion Institute, 1982, pp. 1523–1531.

[2] I. Kimura, H. Aoki, M. Kato, The use of a plasma jet for flame stabilization and promotion of combustion in supersonic air flows, Combustion and Flame 42 (1981) 297–305.

[3] J.B.Z. Yongcheng, Investigation of plasma jet ignition in aircraft engine, Aeroengine 109 (4) (2002) 52–53.

[4] J.R. Zhao, Z.Y. Li, J.D. Zhao, The principle and design of air plasma arc cutting device, Chinese Mechanical Industry Press 4 (1997) 39–41.

[5] Z.Y. Guo, W.H. Zhao, Arc and hot plasma, Science Press (1996) 7.

[6] Z. Mei, Study on mathematical model of nozzle aperture for air plasma arc cutting machine, Welding Technology Publications 4 (1996) 21.