Topology and its Applications 159 (2012) 2158–2167

Contents lists available at SciVerse ScienceDirect

Topology and its Applications

www.elsevier.com/locate/topol

H(2)-unknotting operation related to 2-bridge links

Yuanyuan Bao [1]

Graduate School of Mathematics, Tokyo Institute of Technology, Oh-okayama, Meguro, Tokyo 152-8551, Japan

ARTICLE INFO

Article history:
Received 28 September 2011
Accepted 14 February 2012

MSC:
57M27
57M25

Keywords:
H(2)-unknotting number
2-Bridge link
Dehn surgery
Ozsváth–Szabó correction term

ABSTRACT

This paper concerns the H(2)-unknotting numbers of links related to 2-bridge links. It consists of three parts. In the first part, we consider a necessary and sufficient condition for a 2-bridge link to have H(2)-unknotting number one. The second part concerns an explicit form of composite links with H(2)-unknotting number one. In the last part, we develop a method of studying the H(2)-unknotting numbers of some tangle unknotting number one knots via 2-bridge knots.

© 2012 Elsevier B.V. All rights reserved.

1. Introduction

In this paper all the links are assumed to be unoriented except otherwise stated. An H(2)-move is a local transformation between link diagrams, as shown in Fig. 1. It is an unknotting operation. The H(2)-*unknotting number* [11] of a link L is the minimal number of H(2)-moves needed to change the link into the unknot, and we denote it by $u_2(L)$. In this paper, we study this unknotting operation for links related to 2-bridge links. It consists of three parts.

In Section 2, we make some observations about 2-bridge links with H(2)-unknotting number one. Our purpose is to find out 2-bridge links whose H(2)-unknotting numbers are one. Here is our main observation.

Proposition 1.1. *The* 2*-bridge link* $S(p,q)$ *has* H(2)*-unknotting number one if and only if the lens space* $L(p,q)$ *can be obtained as an integral surgery along a Berge knot in* S^3.

We remark that this observation is just a corollary of some known results about integral surgery. Since our interest is H(2)-unknotting operation, we think it is worth to write it down. In [13], an incomplete table of H(2)-unknotting numbers of knots is provided. Among knots with nine crossings, there are six knots whose H(2)-unknotting numbers are unknown. We confirm that among them the 2-bridge knots 9_{21}, 9_{23}, 9_{26} and 9_{31} are knots with H(2)-unknotting number one. We refer to Rolfson's table for the notations of knots.

Corollary 1.2. *The* 2*-bridge knots* 9_{21}, 9_{23}, 9_{26} *and* 9_{31} *have* H(2)*-unknotting number one.*

Section 2 essentially has no direct relation to Sections 3 and 4.

Section 3 is about composite links of H(2)-unknotting number one. Bleiler [4] and Eudave-Muñoz [6] proved that if a composite link has H(2)-unknotting number one then it is a connected sum of a 2-bridge link and a prime link. The

E-mail address: bao.y.aa@m.titech.ac.jp.

[1] The author is supported by scholarship from the Ministry of Education, Culture, Sports, Science and Technology of Japan.

0166-8641/$ – see front matter © 2012 Elsevier B.V. All rights reserved.
doi:10.1016/j.topol.2012.02.008

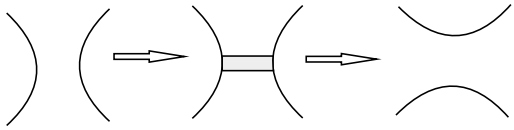

Fig. 1. An H(2)-move.

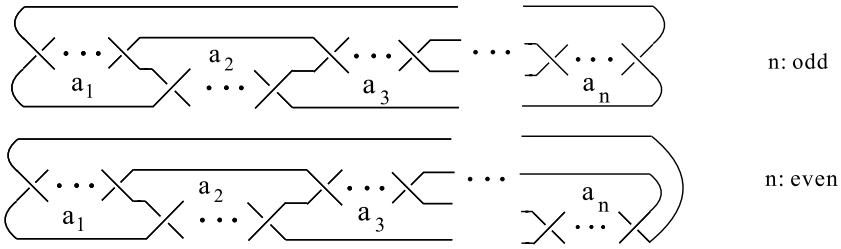

Fig. 2. The link diagram $C(a_1, a_2, \ldots, a_n)$ for 2-bridge links.

purpose of Section 3 is to study the explicit forms of the two summands of such composite links. First we have the following result:

Proposition 1.3. *If K_1 is the 2-bridge link $S(q, p)$, and K_2 is a (p, q)-tangle unknotting number one link, then the* H(2)*-unknotting number of the composite $K_1 \sharp K_2$ is one.*

We conjecture that the converse holds as well, which we expressed as Conjecture 3.4. When we restrict the two summands to 2-bridge links, we have the following complete description.

Proposition 1.4. *Suppose $S(p, q)$ and $S(r, s)$ are two non-trivial 2-bridge links. Then the composite $S(p, q) \sharp S(r, s)$ has* H(2)*-unknotting number one if and only if either $S(r, s) = S(q, p)$, or $S(p, q) = S(v, \epsilon)$ and $S(r, s) = S(vab + \epsilon, va^2)$ for $\epsilon = \pm 1$ and some integers v, a and b satisfying $(a, b) = 1$.*

Notice that the 2-bridge link $S(p, q)$ is a (p, q)-tangle unknotting number one link, and that $S(vab + \epsilon, va^2)$ is an (ϵ, v)-tangle unknotting number one link. Our conjecture is supported when both summands are 2-bridge links.

In a previous paper [1], we introduced a method of detecting whether a knot has H(2)-unknotting number one or not. The correction terms appearing in [1] are usually very challenging to calculate. When a knot K is an alternating knot, there is a combinatorial formula for these correction terms. But in general, there is no practical rule to calculate them. Ozsváth and Szabó [17] used techniques related to plumbing manifolds and sharp manifolds to calculate these correction terms for some non-alternating knots.

In Section 4, we want to apply the method in [1] to some tangle unknotting number one knots, which are usually non-alternating, without calculating their correction terms. Given a tangle unknotting number one knot K, our idea is to compare the correction terms of K with those of certain 2-bridge knot, and to study K via studying the 2-bridge knot. Note that 2-bridge knots are alternating and the correction terms for which are easy to calculate. A disadvantage of our method is it only works for some special tangle unknotting number one knots, rather than all of them. After introducing the theory, as examples, we show how to apply it to calculating the H(2)-unknotting numbers of some $(23, 3)$-tangle unknotting number one knots.

2. 2-Bridge links with H(2)-unknotting number one

The 2-bridge links have been widely studied in knot theory. The 2-bridge link $S(p, q)$ to be used here is the link illustrated in Fig. 2. Here p/q is the continued fraction $[a_1, a_2, \ldots, a_n]$. Precisely

$$\frac{p}{q} = [a_1, a_2, \ldots, a_n] = a_1 + \frac{1}{a_2 + \cdots + \frac{1}{a_n}}.$$

Let $C(a_1, a_2, \ldots, a_n)$ denote the link diagram in Fig. 2. Two unoriented links K_1 and K_2 are *equivalent* if there exists an orientation-preserving auto-homeomorphism of S^3 sending K_1 to K_2. The following fact is well known: Two unoriented 2-bridge links $S(p_1, q_2)$ and $S(p_2, q_2)$ are equivalent if and only if $p_1 = p_2$ and $q_1^{\pm} \equiv q_2 \pmod{p_1}$.

The purpose of this section is to find out 2-bridge links whose H(2)-unknotting numbers are one. There is essentially no new theory here. We collect some known facts to get a necessary and sufficient condition for a 2-bridge link to have

H(2)-unknotting number one, which is Proposition 1.1, and apply this observation to complement a table in [13], which we express as Corollary 1.2.

We use $S^3_r(K)$ to denote the 3-manifold obtained by doing Dehn surgery to the 3-sphere S^3 along the knot K with coefficient r. Our orientation convention is the p/q-surgery along the trivial knot gives the lens space $L(p,q)$. An oriented knot C is called *strongly-invertible* if there is an orientation-preserving homeomorphism, which is also an involution, of S^3 which takes the knot to itself but reverses the orientation along the knot. Given a link K, let $\Sigma(K)$ denote the double branched cover of S^3 along K. It is well known that the double branched cover of S^3 along the 2-bridge link $S(p,q)$ is the lens space $L(p,q)$. We have the following lemma.

Lemma 2.1. *The 2-bridge link $S(p,q)$ has H(2)-unknotting number one if and only if the lens space $L(p,q)$ is $S^3_{\pm p}(C)$ for some strongly-invertible knot C.*

Proof. The proof is in fact a practice of Montesinos' trick [14]. In general, if a link K has H(2)-unknotting number one, then $\Sigma(K)$ equals $S^3_p(C)$ for some strongly-invertible knot C and $|p|$ equals the absolute value of the determinant of K. For 2-bridge links, the converse is true as well. The reason is as follows. For an integer p and a strongly-invertible knot C, one can always construct a link with H(2)-unknotting number one for which the double branched cover is $S^3_p(C)$. The double branched cover of S^3 along the 2-bridge link $S(p,q)$ is the lens space $L(p,q)$, and it is known [10] that there is no other links sharing the same double branched cover with $S(p,q)$. Therefore, if the lens space $L(p,q)$ equals $S^3_{\pm p}(C)$, the H(2)-unknotting number of the 2-bridge link $S(p,q)$ must be one. □

Since the set of strongly-invertible knots is too large, Lemma 2.1 does not help us simplify the task of finding out 2-bridge links with H(2)-unknotting number one. On the other hand, there have been many studies about integral surgeries which produce lens spaces. In the following paragraphs, we assemble some of these studies and come up with a practical criterion, which is Proposition 1.1, for distinguishing 2-bridge links with H(2)-unknotting number one.

If some integral surgery of S^3 along a knot gives rise to a lens space, we say this knot *admits integral lens space surgery*. It is known that doubly-primitive knots admit integral lens space surgeries. Here is the definition. Given a loop in the boundary of a genus two handlebody, it is called *primitive* if attaching a 2-handle produces a solid torus. A knot in S^3 is called *doubly-primitive* if it sits on a genus two Heegaard surface of S^3, and is primitive in handlebodies on both sides. Berge [2] found twelve classes of doubly-primitive knots, which are now called Berge knots. The lens spaces which arise as integral surgeries along Berge knots are listed as follows in [19]:

Theorem 2.2 *(Berge). The lens space $L(\alpha,\beta)$ arises as an integral surgery along a Berge knot if there exists an integer k such that $\beta \equiv \pm k^2 \pmod{\alpha}$, and α, β and k satisfy one of the following conditions*:

(i) $\alpha \equiv ik \pm 1 \pmod{k^2}$ *and* $\gcd(i,k) = 1, 2$ *for some* i;
(ii) $\alpha \equiv \pm(2k+\epsilon)d \pmod{k^2}$, $d|k-\epsilon$ *and* $\frac{k-\epsilon}{d}$ *is odd, for* $\epsilon = \pm 1$;
(iii) $\alpha \equiv \pm(k+\epsilon)d \pmod{k^2}$ *and* $d|2k-\epsilon$, *for* $\epsilon = \pm 1$;
(iv) $\alpha \equiv \pm(k+\epsilon)d \pmod{k^2}$, $d|k+\epsilon$ *and* d *is odd, for* $\epsilon = \pm 1$;
(v) $k^2 \pm k \pm 1 \equiv 0 \pmod{\alpha}$;
(vi) $\alpha = 22j^2 + 9j + 1$ *and* $k = 11j + 2$ *for some* j;
(vii) $\alpha = 22j^2 + 13j + 2$ *and* $k = 11j + 3$ *for some* j.

The following fact is implicated in [12].

Theorem 2.3. *The 2-bridge link $S(p,q)$ has H(2)-unknotting number one when the lens space $L(p,q)$ can be obtained as an integral surgery along a doubly-primitive knot in S^3.*

Berge [3] proved that every doubly-primitive knot in S^3 is a Berge knot. Greene [8] proved the following result:

Theorem 2.4. *([8]) If a lens space is realized as an integral surgery along a knot in S^3, then it can be realized as an integral surgery along some Berge knot.*

The proof of Proposition 1.1 now easily follows from Theorems 2.3 and 2.4. Lens spaces which arise as integral surgeries along Berge knots have been completely listed in Theorem 2.2. Therefore, the corresponding 2-bridge links are those 2-bridge links whose H(2)-unknotting numbers are one. To prove Corollary 1.2, we only need to show that these four 2-bridge knots belong to the list.

Proof of Corollary 1.2. Within this proof, we do not distinguish a knot from its mirror image. If the corresponding lens spaces belong to the list in Theorem 2.2, then Proposition 1.1 tells us that the 2-bridge knots have H(2)-unknotting number

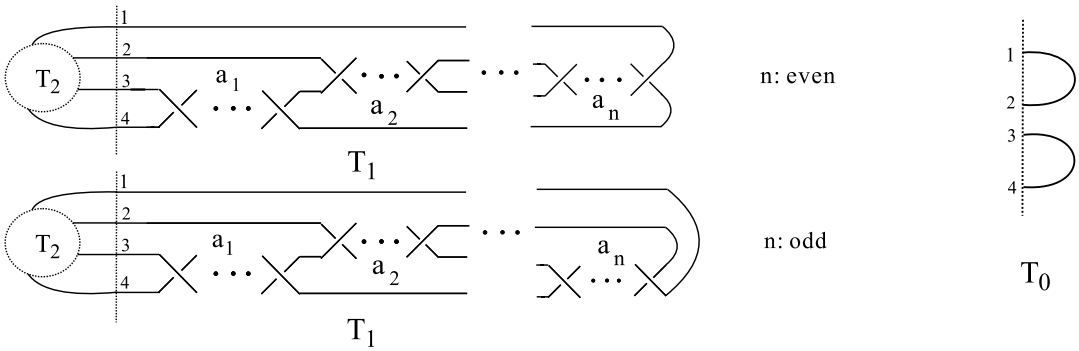

Fig. 3. The tangle decomposition for a (p,q)-tangle unknotting number one knot.

one. For $9_{21} = S(43,25)$, we have $43 = d(2k-1) \pmod{k^2}$ and $25 = k^2$ for $k = 5$ and $d = 2$. It belongs to Berge type (ii). For $9_{23} = S(45,64)$, we have $45 = d(2k-1) \pmod{k^2}$ and $64 = k^2$ for $k = 8$ and $d = 3$. It belongs to Berge type (ii). For $9_{26} = S(47,81)$, we have $47 = -d(2k-1) \pmod{k^2}$ and $81 = k^2$ for $k = 9$ and $d = 2$. It belongs to Berge type (ii). For $9_{31} = S(55,144)$, we have $55 = d(k-1) \pmod{k^2}$ and $144 = k^2$ for $k = 12$ and $d = 5$. It belongs to Berge type (iii). □

3. Composite links with H(2)-unknotting number one

In this section, we study composite links with H(2)-unknotting number one. We mainly focus on the proofs of Propositions 1.3 and 1.4.

Definition 3.1. A link K is a (p,q)-tangle unknotting number one link if there is a tangle decomposition $K = T_1 \cup T_2$ such that T_1 is the rational tangle as shown in Fig. 3 and that $T_0 \cup T_2$ is the unknot. Here p/q is the continued fraction $[a_1, a_2, \ldots, a_n]$. We call T_1 a rational tangle with Conway notation $(a_1, a_2, \ldots, a_n)$.

Note that the definition depends on not only (p,q), but also the sequence of numbers $(a_1, a_2, \ldots, a_n)$. Our convention for Conway notation may be different from those in some references.

Remark 3.2. The notation "tangle unknotting number one link" comes from the preprint [9], but the definition here is slightly modified.

Lemma 3.3. *If a link K is a (p,q)-tangle unknotting number one link, then this link is also a $(p+aq,q)$-tangle unknotting number one link for any integer a. Furthermore, in this case there is an integer a such that $\Sigma(K) = S_{(p+aq)/q}(C)$ for some strongly-invertible knot C.*

Proof. We first explain the former statement. Let $K = T_2 \cup T_1$ be the tangle decomposition as in Definition 3.1 and T_1 be the rational tangle with notation $(a_1, a_2, \ldots, a_n)$. Given an integer a, let T_1^a be the rational tangle with notation $(a_1 + a, a_2, \ldots, a_n)$ and T_2^a be the tangle obtained from T_2 by making $(-a)$ half twists along the endpoints 3 and 4. It is easy to see that $K = T_1^a \cup T_2^a$ and that $T_2^a \cup T_0$ is the unknot. Therefore K is a $(p+aq,q)$-tangle unknotting number one link as well.

Now we prove the latter statement, which is again a practice of Montesinos' trick. Consider the tangle decomposition

$$\left(S^3, T_0 \cup T_2\right) = \left(D^3, T_0\right) \cup \left(D^3, T_2\right).$$

Since $T_0 \cup T_2$ is the unknot, the double branched cover of S^3 along $T_0 \cup T_2$ is still S^3. The double branched cover of D^3 along T_0 is a solid torus, which we denote S_0. Therefore, the manifold obtained by attaching S_0 to the double branched cover of D^3 along T_2 along their common torus boundary, is S^3. This implies that the double branched cover of D^3 along T_2 is the complement of a knot, say C, in S^3. In order to see that C is strongly-invertible, we notice that the image of C in the base space S^3 is the dotted arc as shown in Fig. 4. It is easy to see that the preimage of this arc, which is C, is strongly-invertible.

Next, we consider the tangle decomposition of K: $(S^3, K) = (D^3, T_1) \cup (D^3, T_2)$. Taking the double branched cover, we get

$$\Sigma(K) = S_1 \cup \left(S^3 \setminus \nu(C)\right),$$

where S_1 denotes the double branched cover of D^3 along T_1, which is a solid torus. Let (m_0, l_0), (m_1, l_1) and (m, l) be the preferred meridian-longitudes of S_0, S_1 and C respectively. Here we choose the same orientation for S_0 and S_1. We can see that $m_1 = pm_0 + ql_0$, while we already know that $m_0 = m$ and $l_0 = l + am$ for some integer a, so as a conclusion we have $m_1 = (p+aq)m + ql$. That is to say $\Sigma(K) = S^3_{(p+aq)/q}(C)$. □

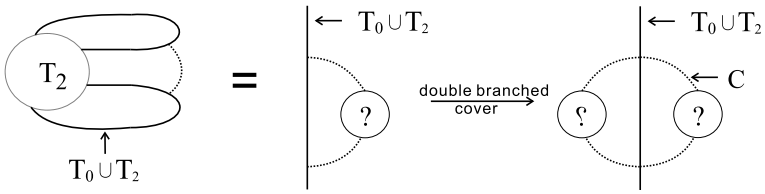

Fig. 4. The knot C.

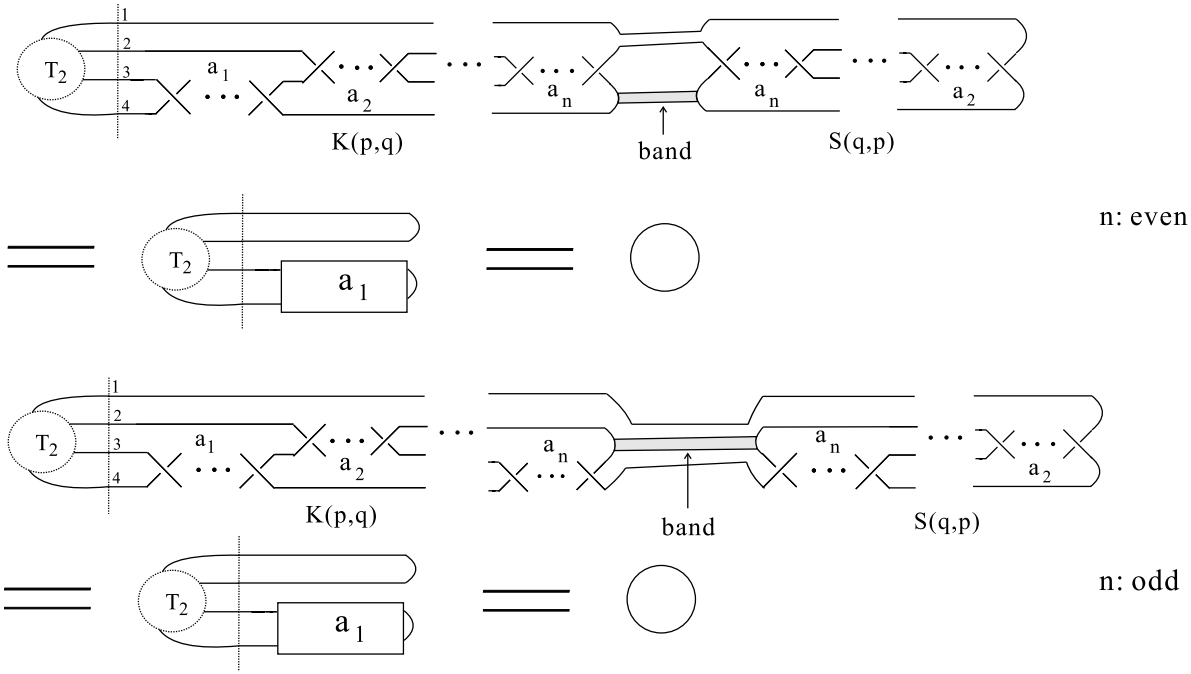

Fig. 5. The H(2)-unknotting number of the composite link is one.

Proof of Proposition 1.3. In fact, if $p/q = [a_1, a_2, \ldots, a_n]$, then $S(q, p)$ is equivalent to $S(q, p - a_1 q)$. Note that $q/(p - a_1 q) = [a_2, \ldots, a_n]$. Then $C(a_2, \ldots, a_n)$ is a link diagram for $S(q, p)$. The composite link $K(p, q)\sharp S(q, p)$ can be unknotted by adding a band, as shown in Fig. 5. This completes the proof. □

We conjecture that the converse of Proposition 1.3 is true:

Conjecture 3.4. *A composite link with* H(2)*-unknotting number one always has the form described in Proposition* 1.4.

We have the following corollary since the 2-bridge link $S(p, q)$ is a (p, q)-tangle unknotting number one link. It is in fact Theorem 9.1 in [13].

Corollary 3.5. *The* H(2)*-unknotting number of the link* $S(p, q)\sharp S(q, p)$ *is one.*

Before giving the proof of Proposition 1.4, we introduce some facts. Given a knot K and two coprime integers p and q, we use $K_{p,q}$ to denote the (p, q)-cable knot of K. It is conjectured (the cabling conjecture [7]) that if an integral surgery of S^3 along a knot L produces a reducible manifold, then L is a cable knot and the slope of the surgery is pq. This conjecture holds when L is a strongly-invertible knot [6].

Proof of Proposition 1.4. If $S(p, q)\sharp S(r, s)$ has H(2)-unknotting number one, then there exists a strongly-invertible knot C and an integer l such that $\Sigma(S(p, q)\sharp S(r, s)) = L(p, q)\sharp L(r, s) = S^3_l(C)$. Since the cabling conjecture holds for strongly-invertible knots, the knot C must be a cable knot, say $C = K_{u,v}$ for some knot K and coprime integers u and v. Then we have $l = uv$ and $S^3_l(C) = S^3_{u/v}(K)\sharp L(v, u)$, which in turn equals $L(p, q)\sharp L(r, s)$. By the prime decomposition theorem for 3-manifolds, we can suppose $L(v, u) = L(p, q)$. Then $S^3_{u/v}(K)$ has to be $L(r, s)$. The cyclic surgery theorem [5] implies that if a non-integral Dehn surgery of S^3 along a knot produces a Lens space, then the knot is a torus knot. Since $|v| = |p| > 1$, the fact $S^3_{u/v}(K) = L(r, s)$ implies that K must be a torus knot.

If K is the unknot, then $S^3_{u/v}(K) = L(u, v) = L(r, s)$. Therefore $S(r, s)$ is equivalent to $S(q, p)$. (In fact, $S(r, s)$ may be $S(q + jp, p)$ for some integer j, but in this case, we can write $S(p, q)$ as $S(p, q + jp)$.) If K is non-trivial, suppose K is the (a, b)-torus knot. Then $S^3_{u/v}(K)$ is a lens space only if $u = vab \pm 1$, and then $S^3_{u/v}(K) = L(vab \pm 1, va^2)$. In this case, $S(p, q) = S(v, vab \pm 1) = S(v, \pm 1)$ and $S(r, s) = S(vab \pm 1, va^2)$.

The converse can be proved easily. □

From Propositions 1.3 and 1.4, we have the following corollary:

Corollary 3.6.

(i) *The* H(2)*-unknotting number of a* (p, q)*-tangle unknotting number one link is less than or equal to* $u_2(S(q, p)) + 1$.
(ii) $u_2(C(a_1, a_2, \ldots, a_n)) \leqslant u_2(C(a_i, a_{i+1}, \ldots, a_n)) + i - 1$.

Remark 3.7. The 2-bridge link $S(vab + \epsilon, va^2)$ in Proposition 1.4 is an (ϵ, v)-tangle unknotting number one link.

4. Tangle unknotting number one knots

In Section 4.1, we recall some facts in Heegaard Floer homology for our discussions in Sections 4.2 and 4.3. In Section 4.2 we establish Relation (4), which is the central result in Section 4. In Section 4.3 we apply it to calculating the H(2)-unknotting numbers of some tangle unknotting number one knots.

4.1. Preliminaries

Almost all the ingredients contained in this subsection can be found in [17], or an earlier paper [15]. But for intactness, we include them here. If X is an oriented 3- or 4-manifold, the second cohomology $H^2(X, \mathbb{Z})$ acts on the set of spin^c-structures $\mathrm{Spin}^c(X)$ freely and transitively. Each spin^c-structure $s \in \mathrm{Spin}^c(X)$ has the first Chern class $c_1(s) \in H^2(X, \mathbb{Z})$, and the relation to the action is $c_1(s + h) = c_1(s) + 2h$ for any $h \in H^2(X, \mathbb{Z})$.

Let Y be an oriented rational homology 3-sphere and s be a spin^c-structure over Y. Then there is Heegaard Floer homology associated with the pair (Y, s). In this note, we use Heegaard Floer homology with coefficients in the field $\mathbb{F} := \mathbb{Z}/2\mathbb{Z}$. There are several versions of this homology. One version is $HF^+(Y, s)$, which is a $\mathbb{Q}$-graded module over the polynomial algebra $\mathbb{F}[U]$. That is

$$HF^+(Y, s) = \bigoplus_{i \in \mathbb{Q}} HF^+_i(Y, s),$$

where multiplication by U lowers the grading by two. In each grading $i \in \mathbb{Q}$, $HF^+_i(Y, s)$ is a finite-dimensional $\mathbb{F}$-vector space. A simpler version is $HF^\infty(Y)$, and it satisfies $HF^\infty(Y, s) = \mathbb{F}[U, U^{-1}]$ for each $s \in \mathrm{Spin}^c(Y)$ [16, Theorem 10.1]. It is also $\mathbb{Q}$-graded and multiplication by U lowers its grading by two.

There is a natural $\mathbb{F}[U]$-equivariant map

$$\pi : HF^\infty_i(Y, s) \to HF^+_i(Y, s),$$

which is zero in all sufficiently negative gradings and an isomorphism in all sufficiently positive gradings. Note that π preserves the $\mathbb{Q}$-grading. The map π determines an invariant $d(Y, s)$, which is called the *correction term* of the pair (Y, s). Precisely $d(Y, s)$ is the minimal $\mathbb{Q}$-grading on which the map π is non-zero. The correction terms for Y and $-Y$, where "$-$" means the reversion of orientation, are related by the formula

$$d(-Y, s) = -d(Y, s)$$

under the natural identification $\mathrm{Spin}^c(Y) \cong \mathrm{Spin}^c(-Y)$.

The map π behaves naturally under cobordisms. Let Y_1 and Y_2 be two oriented rational homology 3-spheres. We say a smooth connected oriented 4-manifold X is a cobordism from Y_1 to Y_2 if the boundary of X is given by $\partial X = (-Y_1) \cup Y_2$. Suppose X is a cobordism from Y_1 to Y_2 and t is a spin^c-structure of X. Then there is a homomorphism

$$F^o_{X,t} : HF^o(Y_1, s_1) \to HF^o(Y_2, s_2),$$

where HF^o denotes HF^+ or HF^∞ and s_i is the restriction of t to Y_i for $i = 1, 2$ (we simply express it as $s_i = t|_{Y_i}$). The map π and the map $F^o_{X,t}$ fit into the following commutative diagram:

$$\begin{array}{ccc} HF^\infty(Y_1, s_1) & \xrightarrow{F^\infty_{X,t}} & HF^\infty(Y_2, s_2) \\ \pi_1 \downarrow & & \downarrow \pi_2 \\ HF^+(Y_1, s_1) & \xrightarrow{F^+_{X,t}} & HF^+(Y_2, s_2). \end{array} \tag{1}$$

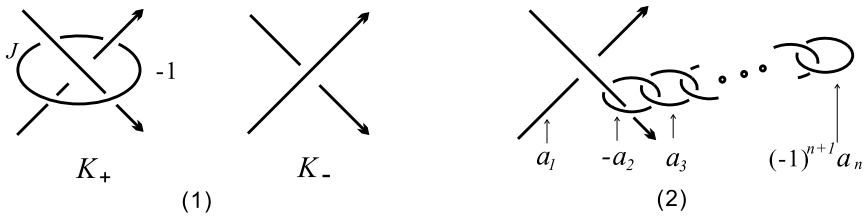

Fig. 6. Kirby diagrams.

When X is a negative-definite 4-manifold it is shown in [15] that

$$d(Y_2, t|_{Y_2}) - d(Y_1, t|_{Y_1}) \geqslant \frac{c_1^2(t) - 2\chi(W) - 3\sigma(W)}{4}, \tag{2}$$

$$d(Y_2, t|_{Y_2}) - d(Y_1, t|_{Y_1}) = \frac{c_1^2(t) - 2\chi(W) - 3\sigma(W)}{4} \pmod 2, \tag{3}$$

where $\chi(W)$ is the Euler characteristic of W and $\sigma(W)$ is the signature of W. Both relations follow from the proof of [15, Theorem 9.6], but they are not clearly stated. For readers' convenience, we explain them here. If X is a negative-definite cobordism, the proof of Theorem 9.1 in [15] (also mentioned in the proof of [15, Proposition 9.9]) tells us that $F^{\infty}_{X,t}$ is an isomorphism. There is an element $\xi \in HF^{\infty}(Y_2, t|_{Y_2})$ with the property that its $\mathbb{Q}$-grading $\mathrm{gr}(\xi)$ is $d(Y_2, t|_{Y_2})$. Suppose the preimage of ξ in $HF^{\infty}(Y_1, t|_{Y_1})$ is η. Then by Eq. (4) in [15], we have

$$\mathrm{gr}(\xi) - \mathrm{gr}(\eta) = \frac{c_1^2(t) - 2\chi(W) - 3\sigma(W)}{4} = d(Y_2, t|_{Y_2}) - \mathrm{gr}(\eta).$$

By the definition of correction term, it is easy to see that

$$\mathrm{gr}(\eta) \geqslant d(Y_1, t|_{Y_1}).$$

Since Y_1 is an oriented rational homology 3-sphere, as an $\mathbb{F}$-vector space, we have ([16, Theorem 10.1]) $HF^{\infty}(Y_1, t|_{Y_1}) = \bigoplus_{i=-\infty}^{\infty} \mathbb{F}_{(d+2i)}$, where $d = d(Y_1, t|_{Y_1})$ and $\mathbb{F}_{(j)}$ denotes the summand supported on grading j. Therefore we have

$$\mathrm{gr}(\eta) - d(Y_1, t|_{Y_1}) = 0 \pmod 2.$$

Now (2) and (3) follow from the argument above.

4.2. Theory

The purpose of this subsection is to prove Relation (4), which will be applied in next subsection to calculate the H(2)-unknotting numbers of some tangle unknotting number one knots. For a connected oriented rational homology 3-sphere Y, if the order of $H^2(Y, \mathbb{Z})$ is odd, there exists a group structure on the set $\mathrm{Spin}^c(Y)$ by identifying $s \in \mathrm{Spin}^c(Y)$ with $c_1(s) \in H^2(Y, \mathbb{Z})$. In this case, we also denote the correction term $d(Y, s)$ by $d(Y, c_1(s))$ if necessary. We have the following result about H(2)-unknotting number. We remark that the statement is modified slightly from the main theorem in [1], but the correctness can be read out easily from the context.

Theorem 4.1. *([1]) Let K be a knot and p be the absolute value of the determinant of K. If $u_2(K) = 1$, then there is a group isomorphism $\phi : \mathbb{Z}/p\mathbb{Z} \to H^2(\Sigma(K); \mathbb{Z})$ and a sign $\epsilon = \pm 1$ with the properties that for all $i \in \mathbb{Z}/p\mathbb{Z}$:*

$$I_{\phi,\epsilon}(i) := \epsilon \cdot d\big(\Sigma(K), \phi(i)\big) + \frac{1}{4}\left(\frac{1}{p}\left(\frac{p + (-1)^i p}{2} - i\right)^2 - 1\right) = 0 \pmod 2, \quad \textit{and}$$

$$I_{\phi,\epsilon}(i) \geqslant 0.$$

Suppose K_+ and K_- are two knots which differ only in a local neighborhood of a crossing, as shown in Fig. 6(1) (ignore the circle J around the crossing). Consider the two manifolds $Y_+ = S^3_{p/q}(K_+)$ and $Y_- = S^3_{p/q}(K_-)$, where p is odd and $(p, q) = 1$. There is a cobordism from Y_+ to Y_- given by attaching a 2-handle to $Y_+ \times [0, 1]$ along the circle J with framing -1, and we denote the cobordism by $W : Y_+ \to Y_-$. Then we have the following property:

Proposition 4.2. *The cobordism W is a negative-definite cobordism from Y_+ to Y_-, and therefore:*

$$d(Y_-, t_-) - d(Y_+, t_+) \geqslant \frac{c_1^2(s) - 2\chi(W) - 3\sigma(W)}{4} \quad \textit{and}$$

$$d(Y_-, t_-) - d(Y_+, t_+) = \frac{c_1^2(s) - 2\chi(W) - 3\sigma(W)}{4} \pmod 2,$$

where s is a spin^c-structure over W with $s|_{Y_*} = t_*$ for $* = +, -$.

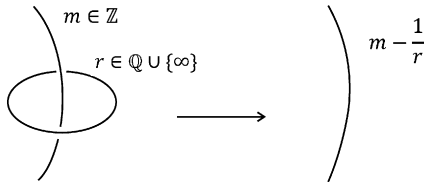

Fig. 7. The slam-dunk move.

Proof. First we prove $H_2(W;\mathbb{Z}) = \mathbb{Z}$ by the following argument. Let W_+ be the plumbing manifold obtained by attaching 2-handles to a four-ball along the framed link in Fig. 6(2). The framings come from that p/q equals the continued fraction $[a_1, a_2, \ldots, a_n]$. By the slam-dunk move in Fig. 7, we see the boundary of W_+ is indeed Y_+. Then we let $X = W_+ \cup W$, and clearly we have $H_2(X;\mathbb{Z}) = \mathbb{Z}^{n+1}$ and $H_2(W_+;\mathbb{Z}) = \mathbb{Z}^n$. Consider the Mayer–Vietoris sequence applied to the decomposition $X = W_+ \cup W$. In this case $W_+ \cap W = S^3_{p/q}(K_+) = Y_+$, so we have the following sequence for integral homology groups:

$$\cdots \to H_2(Y_+) \to H_2(W_+) \oplus H_2(W) \to H_2(X) \to H_1(Y_+) \to \cdots.$$

Since $H_2(Y_+) = 0$, $H_2(W_+) = \mathbb{Z}^n$, $H_2(X) = \mathbb{Z}^{n+1}$ and $H_1(Y_+) = \mathbb{Z}/p\mathbb{Z}$, we have $H_2(W) = \mathbb{Z}$.

It is easy to see that there exists a Seifert surface of J in S^3 which is disjoint with K_+. Let $\alpha \in H_2(W;\mathbb{Z})$ be the homology class of this Seifert surface of J capped off by the core disk of the 2-handle attached along J. Then α is a generator of $H_2(W;\mathbb{Z})$, and we have $\alpha^2 = -1$, which implies that the cobordism W is negative-definite. By (2) and (3), we complete the proof of the proposition. □

Remark 4.3. The idea of the proof comes from the proof of Theorem 1.3 in [18].

In the following two paragraphs, we figure out when the pair of spin^c-structures $(t_+, t_-) \in \mathrm{Spin}^c(Y_+) \times \mathrm{Spin}^c(Y_-)$ can be realized as the restriction of a spin^c-structure over W.

Note that W is constructed by attaching a 2-handle $D^4 = D^2 \times D^2$ to $Y_+ \times [0,1]$ along a solid torus $S^1 \times D^2 = (\partial D^2) \times D^2$. By considering the Mayer–Vietoris sequence associated with the triple $(S^1 \times D^2, Y_+ \times [0,1] \sqcup D^4, W)$, we have

$$0 \to H_2(W) \to H_1\big(S^1 \times D^2\big) = \mathbb{Z} \xrightarrow{f} H_1\big(Y_+ \times [0,1]\big) \oplus H_1\big(D^4\big) = \mathbb{Z}/p\mathbb{Z} \to H_1(W) \to 0.$$

It is easy to see that $H_1(S^1 \times D^2)$ is generated by a longitude of J in Fig. 6, whose homology class in $H_1(Y_+ \times [0,1])$ is zero. Therefore the map f, which is induced by the inclusion map, is trivial. Therefore we have $H_1(W) = \mathbb{Z}/p\mathbb{Z}$. By the universal coefficient theorem, we have $H^2(W) = \mathbb{Z} \oplus \mathbb{Z}/p\mathbb{Z}$. Noting that $\partial W = (-Y_+) \cup Y_-$, we have the following exact sequence with respect to the pair $(W, \partial W)$:

$$0 \to H_2(W) = \mathbb{Z} \xrightarrow{\tau} H^2(W) = \mathbb{Z} \oplus \mathbb{Z}/p\mathbb{Z} \xrightarrow{\alpha} H^2(-Y_+) \oplus H^2(Y_-) = \mathbb{Z}/p\mathbb{Z} \oplus \mathbb{Z}/p\mathbb{Z} \xrightarrow{\beta} H_1(W) = \mathbb{Z}/p\mathbb{Z} \to 0.$$

Let $m_+ \subset Y_+$ be a meridian of K_+ and $m_- \subset Y_-$ be the image of m_+ after the Dehn surgery along J. Then $[m_+]$ and $[m_-]$ are generators of $H_1(Y_+)$ and $H_1(Y_-)$ respectively. We identify $H^2(Y_+)$ with $H_1(Y_+)$ and $H^2(Y_-)$ with $H_1(Y_-)$ by Poincaré duality. Then we have $\beta(-[m_+], [m_-]) = 0 \in H_1(W)$.

The set $\mathrm{Spin}^c(W)$ is an affine space over $H^2(W;\mathbb{Z}) = \mathbb{Z} \oplus \mathbb{Z}/p\mathbb{Z}$. Given a pair of spin^c-structures $t_+ \in \mathrm{Spin}^c(Y_+)$ and $t_- \in \mathrm{Spin}^c(Y_-)$, a spin^c-structure $s \in \mathrm{Spin}^c(W)$ satisfies $s|_{Y_*} = t_*$ for $* = +, -$ if and only if $\alpha(c_1(s)) = (-c_1(t_+), c_1(t_-))$. From the exactness of the sequence, the element $(-i, i) := (-i[m_+], i[m_-]) \in H^2(-Y_+) \oplus H^2(Y_-)$ stays in the image of the map α for $0 \leqslant i \leqslant p-1$. Let $t_+ \in \mathrm{Spin}^c(Y_+)$ and $t_- \in \mathrm{Spin}^c(Y_-)$ be the spin^c-structures for which $(-c_1(t_+), c_1(t_-)) = (-i, i)$. Then (t_+, t_-) is the restriction of some spin^c-structures over W to (Y_+, Y_-).

We use $d(Y_-, i)$ (resp. $d(Y_+, i)$) to denote $d(Y_-, t_-)$ (resp. $d(Y_+, t_+)$). In the following, we want to show that

$$\begin{aligned} &d(Y_-, i) - d(Y_+, i) \geqslant 0 \quad \text{and} \\ &d(Y_-, i) - d(Y_+, i) = 0 \pmod 2, \end{aligned} \tag{4}$$

for any $i \in \mathbb{Z}/p\mathbb{Z}$. By (2) and (3), we have the following relations:

$$\begin{aligned} d(Y_-, i) - d(Y_+, i) &\geqslant \frac{c_1^2(s) - 2\chi(W) - 3\sigma(W)}{4} \quad \text{and} \\ d(Y_-, i) - d(Y_+, i) &= \frac{c_1^2(s) - 2\chi(W) - 3\sigma(W)}{4} \pmod 2, \end{aligned}$$

for any spin^c-structure s over W whose restriction to (Y_+, Y_-) is (t_+, t_-). Note that $\chi(W) = 1$ and $\sigma(W) = -1$. Then we can prove (4) if we can prove that

$$\max\big\{c_1^2(s) \bigm| s \in \mathrm{Spin}^c(W),\ s|_{Y_*} = t_* \text{ for } * = +, -\big\} = -1. \tag{5}$$

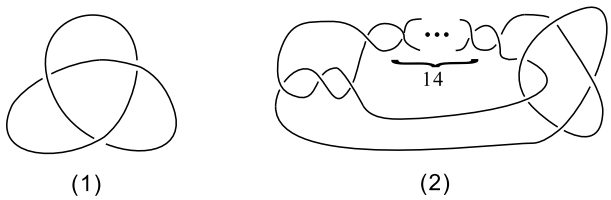

Fig. 8. The left-hand trefoil knot T and the tangle unknotting number one knot whose double branched cover is $S^3_{23/3}(T)$.

We say $\xi \in \mathbb{Z}$ is a *characteristic element* of the matrix (-1) if ξ is odd. Let $t_{+,0}$ and $t_{-,0}$ denote the spin^c-structures whose first Chern classes are trivial, over Y_+ and Y_- respectively. We define a set $H := \{s \in \mathrm{Spin}^c(W) \mid s|_{Y_*} = t_{*,0} \text{ for } * = +, -\}$. Then the first Chern classes of elements in H belong to the free part of $H^2(W;\mathbb{Z}) = \mathbb{Z} \oplus \mathbb{Z}/p\mathbb{Z}$. Conversely any spin^c-structure over W whose first Chern class belongs to the free part of $H^2(W;\mathbb{Z})$, belongs to H. The set $\{c_1(s) \mid s \in H\}$ is equal to the set of characteristic elements of the matrix (-1). If $c_1(s)$ corresponds to the characteristic element ξ, then we have $c_1^2(s) = -\xi^2$. It is easy to calculate that $\max\{c_1^2(s) \mid s \in H\}$ is -1.

Note that $H^2(W;\mathbb{Z})$ acts transitively and freely on the set $\mathrm{Spin}^c(W)$. Any spin^c-structure over W can be transformed into a spin^c-structure in H by a torsion element of $H^2(W;\mathbb{Z})$. We know that for a spin^c-structure s and a torsion element $a \in H^2(W;\mathbb{Z}) = \mathbb{Z} \oplus \mathbb{Z}/p\mathbb{Z}$ there is $c_1(s+a)^2 = c_1(s)^2$. Therefore Relation (5) is true, which in turn implies (4).

4.3. Application

We show that (4) can be used to study the H(2)-unknotting numbers of some tangle unknotting number one knots. Let us consider some $(23,3)$-tangle unknotting number one knots as examples. For the 2-bridge knot $S(23,3)$, the ordered set of the correction terms of its double branched cover, the lens space $L(23,3)$, is given as follows (for the calculation, refer to [17, Proposition 3.2]). Here we identify $\mathrm{Spin}^c(L(23,3))$ with $\mathbb{Z}/23\mathbb{Z}$.

$$\begin{aligned}\big\{d\big(L(23,3),i\big)\big\}_{i=0}^{22} = \Big\{&\frac{3}{2}, \frac{85}{46}, \frac{41}{46}, \frac{29}{46}, \frac{49}{46}, \frac{9}{46}, \frac{1}{46}, \frac{25}{46}, \frac{-11}{46}, \frac{-15}{46}, \frac{13}{46}, \frac{-19}{46}, \frac{-19}{46},\\ &\frac{13}{46}, \frac{-15}{46}, \frac{-11}{46}, \frac{25}{46}, \frac{1}{46}, \frac{9}{46}, \frac{49}{46}, \frac{29}{46}, \frac{41}{46}, \frac{85}{46}\Big\}.\end{aligned}$$

On the other hand, define $f(i) = \frac{1}{4}(\frac{1}{p}(\frac{p+(-1)^i p}{2} - i)^2 - 1)$ for $p = 23$ and any $0 \leqslant i \leqslant 22$. Then we have the following ordered set:

$$\begin{aligned}\big\{f(i)\big\}_{i=0}^{22} = \Big\{&\frac{11}{2}, \frac{-11}{46}, \frac{209}{46}, \frac{-7}{46}, \frac{169}{46}, \frac{1}{46}, \frac{133}{46}, \frac{13}{46}, \frac{101}{46}, \frac{29}{46}, \frac{73}{46}, \frac{49}{46}, \frac{49}{46},\\ &\frac{73}{46}, \frac{29}{46}, \frac{101}{46}, \frac{13}{46}, \frac{133}{46}, \frac{1}{46}, \frac{169}{46}, \frac{-7}{46}, \frac{209}{46}, \frac{-11}{46}\Big\}.\end{aligned}$$

We will apply Theorem 4.1 to show that $u_2(S(23,3)) > 1$. Assume that $u_2(S(23,3)) = 1$. Then by Theorem 4.1, there exist an automorphism ϕ of $\mathbb{Z}/23\mathbb{Z}$ and a sign $\epsilon \in \{+1,-1\}$ such that $I_{\phi,\epsilon}(i)$ are even positive numbers for all $i \in \mathbb{Z}/23\mathbb{Z}$.

No matter which automorphism ϕ of $\mathbb{Z}/23\mathbb{Z}$ we choose, we have $I_{\phi,\epsilon}(0) = \epsilon \cdot d(L(23,3),0) + f(0) = (\epsilon \cdot 3 + 11)/2$. In order to make it be an even number, we need ϵ to be -1. By calculation, we see there exist two possible automorphisms of $\mathbb{Z}/23\mathbb{Z}$, the map ϕ_1 given by multiplication by 8 and ϕ_2 given by multiplication by 15, for which $I_{\phi_j,-1}(i) = -d(L(23,3),\phi_j(i)) + f(i)$ are even integers for all $1 \leqslant i \leqslant 22$ and $j = 1,2$. Precisely in both cases, we have

$$\big\{I_{\phi,-1}(i)\big\}_{i=0}^{22} = \{4,0,4,-2,4,0,2,0,2,0,2,0,0,2,0,2,0,2,0,4,-2,4,0\},$$

where ϕ is either ϕ_1 or ϕ_2. Among these numbers -2 is negative.

As a conclusion, we see that there exists no automorphism ϕ of $\mathbb{Z}/23\mathbb{Z}$ and sign $\epsilon \in \{+1,-1\}$ to guarantee that $I_{\phi,\epsilon}(i)$ are all even positive numbers for $i \in \mathbb{Z}/23\mathbb{Z}$. For simplicity, we say there exist no even positive matchings for the knot $S(23,3)$. Therefore the assumption that $u_2(S(23,3)) = 1$ is false, while it is easy to see that $u_2(S(23,3)) \leqslant 2$, so finally we have $u_2(S(23,3)) = 2$.

Suppose that K is a $(23,3)$-tangle unknotting number one knot and that $|\det(K)| = 23$. Then by Lemma 3.3 there is $\Sigma(K) = S^3_{23/3}(C)$ for some strongly-invertible knot C.

If we get the unknot by changing a negative crossing of C into a positive crossing, then by (4) we have

$$\begin{aligned}&d\big(\Sigma(K),i\big) - d\big(L(23,3),i\big) \geqslant 0 \quad \text{and}\\ &d\big(\Sigma(K),i\big) - d\big(L(23,3),i\big) = 0 \quad (\mathrm{mod}\ 2).\end{aligned}$$

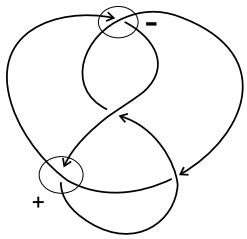

Fig. 9. Figure eight knot.

Now it is easy to see that there exist no even, negative matchings for the knot K as well. So we conclude that $u_2(K) > 1$. By Corollary 3.6, we have $u_2(K) \leqslant u_2(S(3,23)) + 1 = 2$, and therefore $u_2(K) = 2$. For example, let C be the left-hand trefoil knot. Then in this case K is the knot in Fig. 8(2).

If there is a positive and a negative crossing in C for which either of the crossing change gives the unknot, and if particularly C is an amphicheiral knot with unknotting number one (for example the figure eight knot in Fig. 9), then by (4) we have

$$d\big(\Sigma(K), i\big) - d\big(L(23,3), i\big) = 0.$$

By a similar argument as in the previous paragraph, we see in this case $u_2(K) = 2$ as well.

References

[1] Y. Bao, A note on knots with H(2)-unknotting number one, arXiv:1009.3411v1.
[2] J. Berge, Some knots with surgeries yielding lens spaces, unpublished preprint, 1990.
[3] J. Berge, The simple closed curves in genus two Heegaard surfaces of S^3 which are double-primitive, preprint, 2010.
[4] S.A. Bleiler, Banding, twisted ribbon knots, and producing reducible manifolds via Dehn surgery, Math. Ann. 286 (1990) 679–696.
[5] M. Culler, C.M. Gordon, J. Luecke, P.B. Shalen, Dehn surgery on knots, Ann. of Math. (2) 125 (1987) 237–300.
[6] M. Eudave-Muñoz, Band sums of links which yield composite links. The cabling conjecture for strongly invertible knots, Trans. Amer. Math. Soc. 330 (1992) 463–501.
[7] F. González-Acuña, H. Short, Knot surgery and primeness, Math. Proc. Cambridge Philos. Soc. 99 (1986) 89–102.
[8] J.E. Greene, The lens space realization problem, arXiv:1010.6257v1.
[9] M. Hedden, L. Watson, Does Khovanov homology detect the unknot?, arXiv:0805.4423v1.
[10] C. Hodgson, J.H. Rubinstein, Involutions and isotopies of lens spaces, in: Knot Theory and Manifolds, Vancouver, BC, 1983, in: Lecture Notes in Math., vol. 1144, Springer, Berlin, 1985, pp. 60–96.
[11] J. Hoste, Y. Nakanishi, K. Taniyama, Unknotting operations involving trivial tangles, Osaka J. Math. 27 (1990) 555–566.
[12] K. Ichihara, T. Saito, Lens spaces obtainable by surgery on doubly primitive knots, Algebr. Geom. Topol. 7 (2007) 1949–1962.
[13] T. Kanenobu, Y. Miyazawa, $H(2)$-unknotting number of a knot, Commun. Math. Res. 25 (2009) 433–460.
[14] J.M. Montesinos, Surgery on links and double branched covers of S^3, in: Knots, Groups, and 3-Manifolds, Papers Dedicated to the Memory of R.H. Fox, in: Ann. of Math. Stud., vol. 84, Princeton Univ. Press, Princeton, NJ, 1975, pp. 227–259.
[15] P. Ozsváth, Z. Szabó, Absolutely graded Floer homologies and intersection forms for four-manifolds with boundary, Adv. Math. 173 (2003) 179–261.
[16] P. Ozsváth, Z. Szabó, Holomorphic disks and three-manifold invariants: properties and applications, Ann. of Math. (2) 159 (2004) 1159–1245.
[17] P. Ozsváth, Z. Szabó, Knots with unknotting number one and Heegaard Floer homology, Topology 44 (2005) 705–745.
[18] T. Peters, A concordance invariant from the Floer homology of $+1/-1$ surgeries, arXiv:1003.3038v1.
[19] J. Rasmussen, Lens space surgeries and L-space homology spheres, arXiv:0710.2531v1.