Alexandria Engineering Journal (2016) 55, 399–406

HOSTED BY
ELSEVIER

Alexandria University
Alexandria Engineering Journal
www.elsevier.com/locate/aej
www.sciencedirect.com

ORIGINAL ARTICLE

Optimal PMU location in power systems using MICA

Seyed Abbas Taher *, **Hamed Mahmoodi**, **Hojjat Aghaamouei**

Department of Electrical Engineering, University of Kashan, Kashan 87317-51167, Iran

Received 9 June 2014; revised 30 May 2015; accepted 5 December 2015
Available online 29 December 2015

KEYWORDS

Phasor measurement unit (PMU);
Measurement redundancy;
Modified imperialist competitive algorithm (MICA);
Zero injection bus (ZIB);
Observability

Abstract This study presented a modified imperialist competitive algorithm (MICA) for optimal placement of phasor measurement units (PMUs) in normal and contingency conditions of power systems. The optimal PMU placement problem is used for full network observability with the minimum number of PMUs. For this purpose, PMUs are installed in strategic buses. Efficiency of the proposed method is shown by the simulation results of IEEE 14, 30, 57, and 118-bus test systems. Results of the numerical simulation on IEEE-test systems indicated that the proposed technique provided maximum redundancy measurement and minimum request of PMUs so that the whole system could be topologically observable by installing PMUs on the minimum system buses. To verify the proposed method, the results are compared with those of some recently reported methods. When MICA is used for solving optimal PMU placement (OPP), the number of PMUs would be usually equal to or less than those of the other existing methods. Results indicated that MICA is a very fast and accurate algorithm for OPP solution.

1. Introduction

Synchronized PMUs are rapidly populating power systems as their benefits become more and more evident in various power system applications. PMU is considered one of the most important measurement devices in future of power systems. The distinction comes from its unique ability in providing synchronized phasor measurement of voltages and currents from widely dispersed locations in an electric power grid. Synchronism among phasor measurement is achieved by same-time sampling of voltage and current waveforms using a common synchronizing signal from global positioning satellite (GPS) [1–4]. PMU, a newer intelligent electronic device, offers to more frequently provide accurate measurements of the states for power system. However, due to its relatively high costs, practically, PMUs are usually only installed on some selected buses of a power system. By utilizing PMUs, reliability and stability in the power system are expected to be improved. Conventionally, an optimal PMU placement is considered to use the least number of units to make the entire system completely observable.

Strategic placement of few PMUs in the system can significantly increase measurement redundancy, which in turn can improve capability of the state estimator to detect and identify bad data, even during loss of measurement. Meanwhile,

* Corresponding author. Tel./fax: +98 3615559930.
E-mail address: sataher@Kashanu.ac.ir (S.A. Taher).
Peer review under responsibility of Faculty of Engineering, Alexandria University.

http://dx.doi.org/10.1016/j.aej.2015.12.002
1110-0168

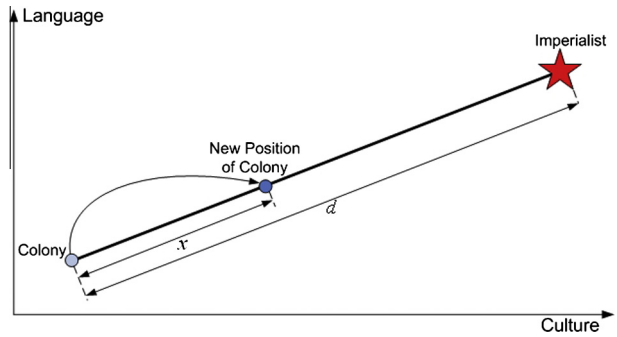

Figure 1 Moving colonies toward their relevant imperialist.

strategic placement of traditional and phasor measurements can also improve the state estimation's topology error detection and identification capability, stability and control, remedial actions and outage monitoring [5–8].

A power system is considered completely observable when all of the states in the system can either be directly or indirectly observable. In recent years, there has been significant research activity on the problem of finding minimum number of PMUs and their optimal locations. The initial work on PMU placement is based on the assumption that PMUs will have an infinite number of channels to monitor phasor currents of all branches that are incident at the bus where a PMU will be installed [9,10]. In [11], an optimal PMU placement method based on the non-dominated sorting genetic algorithm (GA) is proposed. The problem is to find placement of set of minimum PMUs so that the system is still observable during its normal operation and any single-branch contingency. Each optimal solution of objective functions is estimated by the graph theory and simple GA. Then, the best trade-off between competing objectives is searched using no dominated sorting GA. Since this method required more complexity computation, it is limited by size of the problem. A topology method considering only single-branch outage is presented in [12]. However, its topological observability did not guarantee that the state estimation can be solved [13]. A sequential selection process based on performance indices measurement sensitivities and measurement failures is presented in [14].

In this paper, modified imperialist competitive algorithm (MICA) based method was used for solving optimal PMU placement and maximum redundancy in normal and contingency conditions (PMU or line outage). By the proposed method, optimal PMU placement (OPP) was solved and power network became observable.

2. OPP formulation

PMUs are devices which can measure voltage and current sinusoidal waveforms on transmission lines and transmit data to the utility for monitoring and control purposes. Data consist of phase angles, frequency, and electrical parameters (voltage, current, real power, and reactive power). Therefore, a suitable methodology is needed to determine optimal locations of synchrophasors so that the number of PMUs should be minimized to make the system completely observable. When a PMU is located at a certain bus, this bus is directly observable, the neighboring buses that they connected to this bus, they are indirectly observable, and other buses are unobservable.

0	1	1	0	1	0	0	0	0	1	1	0	0	1

(a)

0	1	0	0	1	0	0	0	1	1	1	0	0	1

(b)

Figure 2 Positions of 3 and 9 are mutated: (a) before and (b) after mutation.

If for any possible sequence of state and control vectors, the current state can be determined in finite time using only the outputs, in that case, the system is dynamically observable. In this paper, static (topological) observability is used. Topological observability analysis of a system is mainly found on the basis of the following three rules [15]:

Rule 1: When a PMU is installed at a bus, this bus and other buses are incident to the bus are observable.
Rule 2: If only one bus is unobservable among a ZIB and its entire incident buses, the unobservable bus will be identified as observable bus by applying the Kirchhoff's current law (KCL).
Rule 3: If are observable and related buses that connect to unobservable ZIBs, ZIBs can be observability applying KCL.

For an N-bus system, the OPP problem is formulated as follows:

$$\text{Min} \sum_{i=1}^{N} (c_i \times x_i) \qquad (1)$$
$$\text{s.t. } A \times X \geqslant b$$

where c_i is weighting factor representing the cost of installed PMU at bus i, b is a vector whose entries are all one, and N and i are the number of buses, and the ith row of c matrix, respectively. Also, x_i and A_{ij} are defined as follows:

$$x_i = \begin{cases} 1 & \text{if PMU is installed at bus } i \\ 0 & \text{otherwise} \end{cases} \qquad (2)$$

$$A_{ij} = \begin{cases} 1 & \textit{if } i = j \\ 1 & \text{if the } i\text{th bus is connected to bus } j \\ 0 & \text{otherwise} \end{cases} \qquad (3)$$

1	0	0	0	1	1	0	1	0	1	0	0	1	1

(a)

1	1	0	0	1	1	0	1	0	0	0	0	1	1

(b)

Figure 3 Positions of 2 and 10 are replaced with each other: (a) before and (b) after replacement.

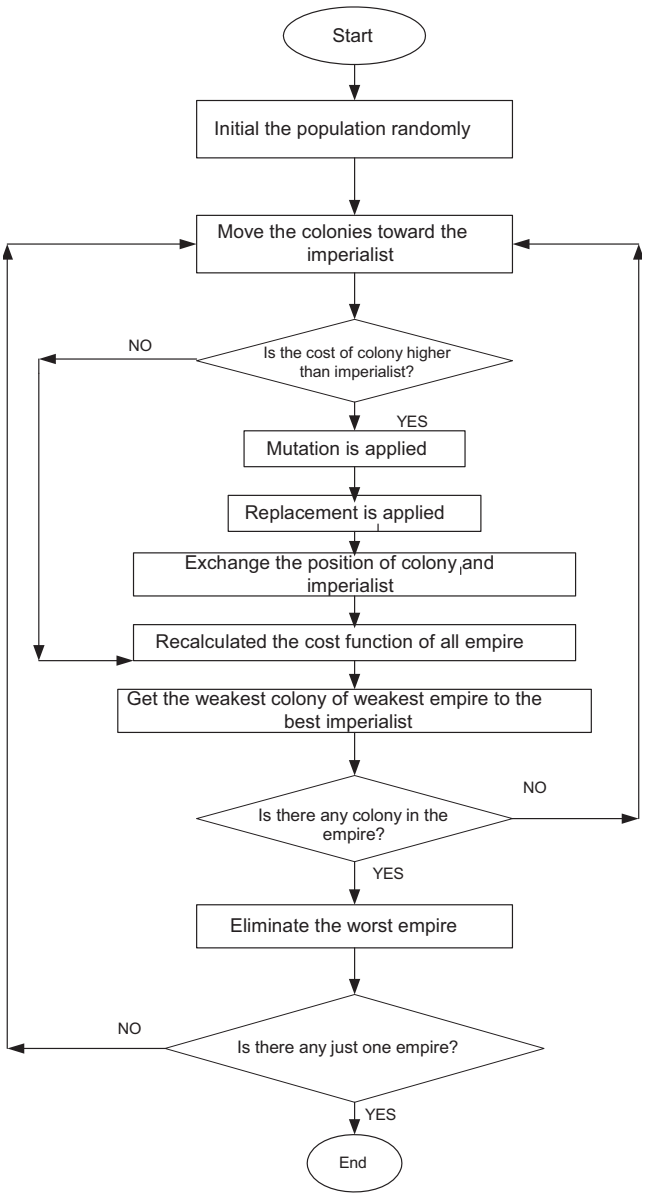

Figure 4 MICA flowchart.

In [16], redundancy measurement is obtained by the following:

$$(\mathrm{M}-\mathrm{AX})^T \times (\mathrm{M}-\mathrm{AX}) \tag{4}$$

AX represents the number of times a bus is observable by PMU and M can be chosen according to the desired level of measurement redundancy in the power network. (M-AX) computes the difference between the desired and actual times a bus is observable so that, in Eq. (1), for maximum redundancy, $A \times X$ must be maximized.

On the other hand, CX must be minimized and AX must be maximized. In fact, two purposes are as follows: minimizing and maximizing. To achieve these purposes, Eq. (1) and inverse of Eq. (4) must be maximized. Radial buses are only observed by one path. To ensure the system observability under a PMU outage, the right-hand side of all of the constraints (except radial buses) is multiplied by 2. For example, in IEEE14-bus, one radial bus exists (bus 8). If two PMUs are observing a bus, then a related line outage will not affect the node observability. Hence, the problem of ascertaining observability under a single line outage is a subset of the problem of the single PMU loss considered above. Active, reactive, and voltage measurements are used in power systems. The constraints from Eq. (1) have to be modified when these conventional measurements are considered. The topology-based method is used for considering both zero injection and conventional measurements.

3. Imperialist competitive algorithm (ICA)

ICA is a new evolutionary algorithm that is developed by Atashpaz-Lucas and its application is optimization by imperialist competition [17]. Like most of the methods in the area of evolutionary computation, ICA does not need gradient of function. The first version of ICA is proposed for solving continuous optimization problems and then in other works, different variants of ICA are used for solving both discrete and continuous problems. For example, chaotic ICA is proposed in [18] and also a version of this algorithm for handling constrained optimization problems is proposed in [19]. In ICA and genetic algorithm (GA), array of variables is employed for optimization and is called "country" and "chromosome", respectively [17]:

$$\text{country} = [P_1, P_2, \ldots, P_{\mathrm{Nvar}}] \tag{5}$$

Each member of "country" ($P_1 \text{or} P_2 \ldots P_{\mathrm{Nvar}}$) is a characteristic of that country such as culture and their number is equal to dimension of optimization problem (Nvar).

Cost of country is obtained by cost function:

$$\text{cost} = f(\text{country}) = f(P_1, P_2, \ldots, P_{\mathrm{Nvar}}) \tag{6}$$

ICA starts with an initial country, some of best countries are selected as imperialists and other countries are chosen as colonies:

$$N_{\mathrm{pop}} = N_{\mathrm{col}} + N_{\mathrm{imp}} \tag{7}$$

N_{imp} is number of imperialist that have powerful cost function and number of remaining countries is N_{col} (number of colonies). First, imperialists are created and then their cost is normalized by the following:

$$C_{\mathrm{n}} = \max_{\mathrm{i}} \{c_{\mathrm{i}}\} - c_n \tag{8}$$

where c_n is cost of nth imperialist and C_n is its normalized cost. Normalized power of each imperialist is calculated by the following:

$$p_{\mathrm{n}} = \left| \frac{c_{\mathrm{n}}}{\sum_{\mathrm{i}=1}^{N_{\mathrm{imp}}} c_{\mathrm{i}}} \right| \tag{9}$$

Each empire has many colonies depending on its powerful such that bigger empires have many colonies. In ICA, each colony moves toward imperialist by x unit (assimilation step). Fig. 1 shows a moving colony toward its imperialist.

In Fig. 1, each colony moves toward its relevant imperialist in two dimensions (culture and language) and x is a random variable with uniform distribution:

$$x \sim U(0, \beta \times d), \ \beta > 1 \tag{10}$$

In Eq. (10), d is distance between colony and imperialist. While a colony moves toward its imperialist, the colony may reach lower cost and its position may be better than imperialist's.

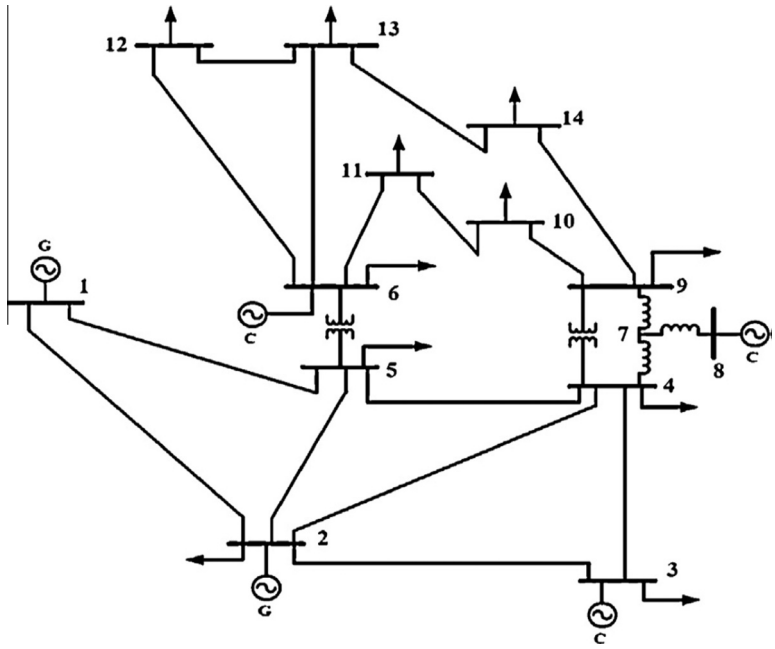

Figure 5 IEEE 14-bus test system.

In this case, position of colony and imperialist is exchanged and the empire has a new imperialist. Total cost (TC_n) of each empire is formulated as follows:

$$TC_{\mathrm{n}} = \mathrm{Cost}(\mathrm{imperialist_n}) + \xi \times \mathrm{mean}\{\mathrm{Cost}(\mathrm{colonies\ of\ empire_n})\}, 0 < \xi < 1 \quad (11)$$

By choosing a little value for ξ, total power of an empire is mainly determined by imperialist. At the next level, imperialist competition begins and the powerless empire is eliminated. Finally, one empire is remained, others are collapsed and the colonies will be under the control of this unique empire. In this new world, all the colonies will have the same positions and costs; in this condition, the algorithm is stopped. For additional explanation about ICA, [17] can be referred to. Convergence time of ICA is very faster than GA. ICA's main benefits include the following:

- Based on the social behavior of human beings more intelligent than his biological behavior.
- High speed convergence.
- Ability to optimize functions with many variables.

ICA is a smart algorithm for solving optimization problems. But, in some problems, it is not possible to achieve the best solution and stuck in the local minimum. For this reason, MICA is proposed, by which in addition to the benefits of the ICA, the best solution for optimization problem could be obtained. On the other hand, ICA is very faster than MICA, but, in some problems, it is not accurate.

In OPP problem, to achieve the best position in a short time, discrete search is much better than continuous search. For this purpose, in assimilation step, crossover is used for moving colonies toward imperialist rather than uniform distribution. Crossover is a genetic operator who combines two colonies (parents) to produce a new colony and the idea behind it is that the new colony may be better than both of the parents if it takes the best characteristics from each of the parents. In MICA, a new step is added to ICA. In this step, revolution or mutation is used for achieving the best solution. This step is made of two parts, which are used randomly:

1. Mutation (is similarly used in GA): Fig. 2 shows mutation for two positions (3 and 9). At this level, two or more positions may be mutated.
2. Replacement (replacing two positions randomly): At this level, two or more positions are replaced with each other. Fig. 3 shows this operation.

Other steps in MICA are similar to ICA. By this reformation in ICA, optimization problem becomes accurate in the discrete space. Fig. 4 shows the MICA flowchart.

4. Case studies and simulation results

In this article, MICA is used for OPP problem. By installing PMUs in strategic buses, the system is observable with minimum number of PMUs. The proposed PMU placement algorithm is applied to power systems with IEEE 14, 30, 57 and 118-bus. Fig. 5 shows the single line diagram of 14-bus IEEE system and Fig. 6 shows the single line diagram of 57-bus IEEE system. Two groups of simulations are carried out on the four systems with and without zero injection buses. The proposed method is applied to IEEE 14-bus, and this system needed four PMUs for complete observability at buses 2, 6, 7 and 9. Many configurations can be obtained for four PMUs, but, for redundancy measurement, the best configuration is buses 2, 6, 7 and 9. Figs. 7–10 show converging trend of MICA for OPP problem on IEEE test systems.

These figures show clearly that the best solution is achieved by MICA in low iterations; for example, in IEEE-57 test

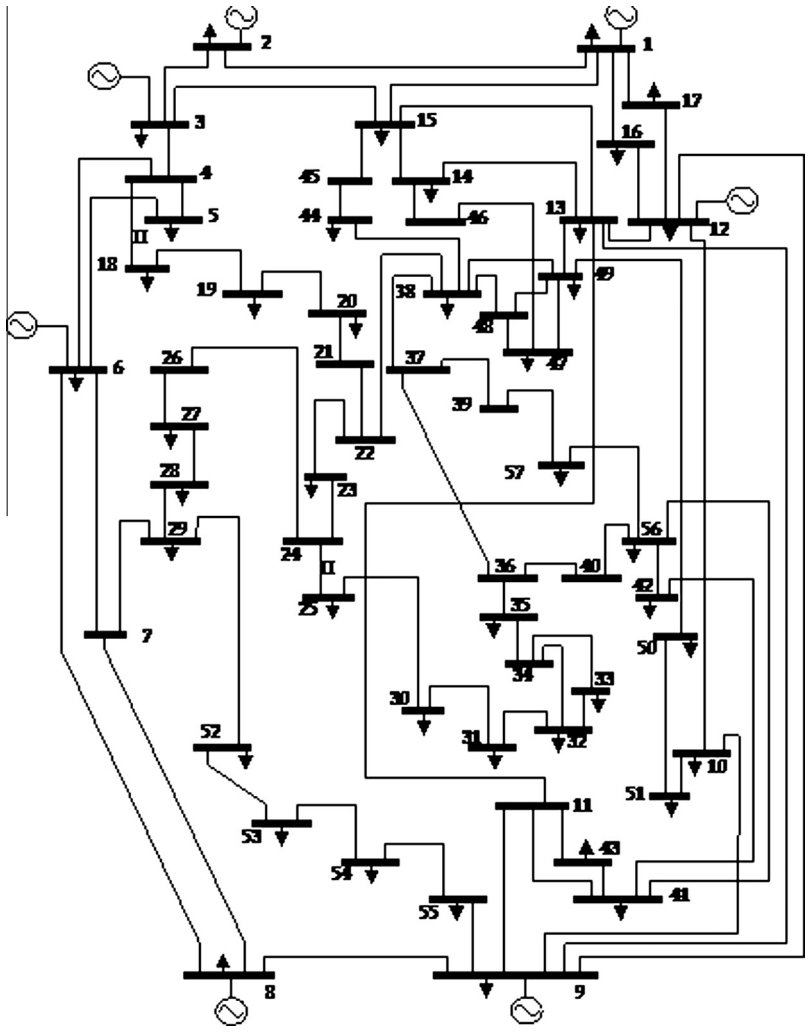

Figure 6 IEEE 57-bus test system.

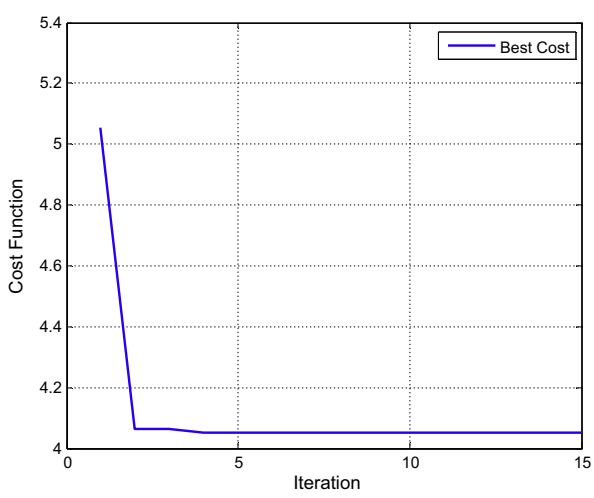

Figure 7 Converging trend of MICA for IEEE 14-bus.

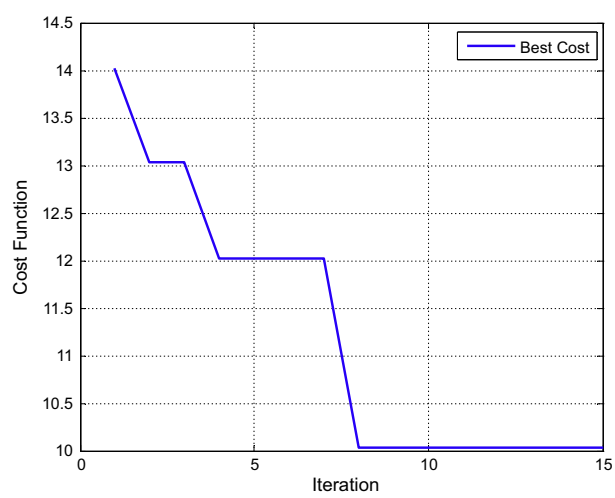

Figure 8 Converging trend of MICA for IEEE 30-bus.

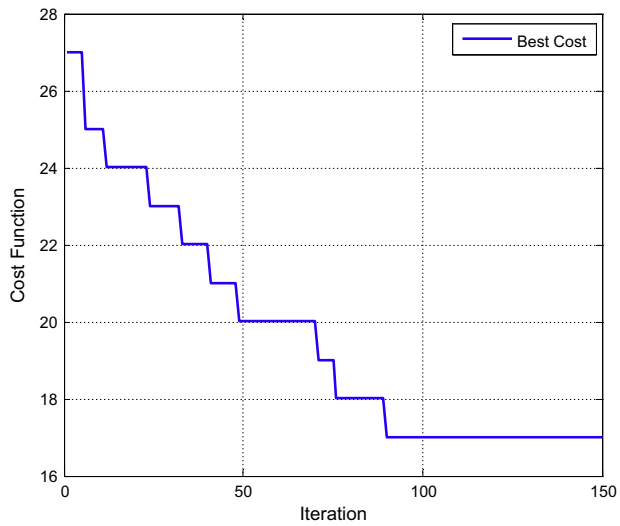

Figure 9 Converging trend of MICA for IEEE 57-bus.

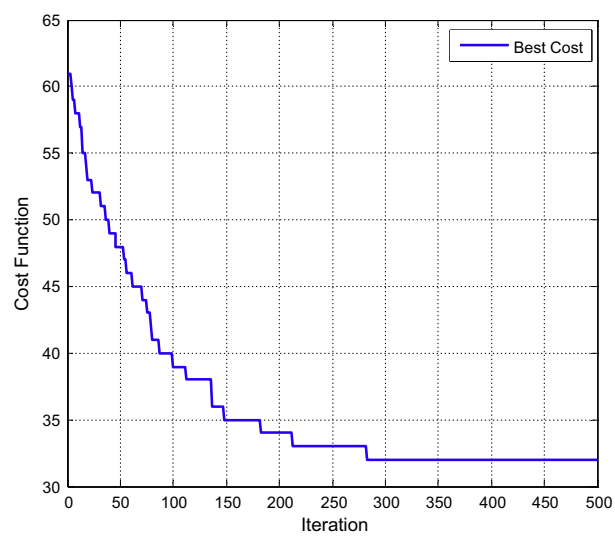

Figure 10 Converging trend of MICA for IEEE 118-bus.

system in [16], the best solution is achieved in more than 750 iterations but, in MICA, OPP problem for the same system is solved at less than 100 iterations. Table 1 shows the number and locations of the required PMUs for full network observability on IEEE test systems.

Table 2 Comparing CPU time of the proposed method (MICA) with that of other relevant methods used in OPP problem.

IEEE system	14-bus	30-bus	57-bus	118-bus
Proposed method MICA	0.2	0.49	2.4	2.8
Modified BPSO [20]	4 min	14 min	35 min	80 min
ILP [22]	0.05	–	30.41	1625.3
ILP + heuristic [22]	0.04	–	1.93	6.37
IGA [23]	2	4	11	72
ICA	0.2	0.35	3.5	-

MICA is a fast algorithm for OPP problem. Table 2 shows the comparison of CPU times of MICA with other relevant methods used in OPP problem [20–23]. CPU time in the proposed method is very low, but it is not main goal. The main objective function is focused on the redundancy measurement and contingencies.

ICA on IEEE 118-bus don't converge to 32 PMUs and the best solution for OPP problem is 39 PMUs. As mentioned, ICA is faster than MICA but not accurate in some problems. If power system is a large system, ICA is not possible to achieve best solution. But with MICA, best solution is achievable in short time.

When zero-injection buses are used in the network, the number of PMUs for full network observability might be reduced. For example, if in IEEE 14-bus, one zero-injection bus (bus 7) existed, the number of PMUs is reduced, and for full network observability, 3 PMUs are used in 2, 6 and 9 buses. Table 3 shows the number and locations of the required PMUs for full network observability while using zero-injection buses.

Simulation results of MICA for the OPP problem show that this algorithm is a fast and accurate method and usually converges to the optimum solution. Simulation results for with/without zero-injection buses are given in Table 4.

In Table 5, the number of PMUs for full network observability by using MICA is compared with other optimization methods when zero-injection bus is used [10,16,24,25].

It can be observed, in Table 5, the number of PMUs for full observability in IEEE 118-bus by MICA is less than GA. In contingency (PMU or line outage), the number of PMUs for full network observability is increased. In Table 6, the number of PMUs for full network observability in contingency is compared with those of integer quadratic programming method. In Table 7, comparison of the measurement redundancy value of MICA is shown in relation to other methods in normal operating mode.

As shown in simulation results (Table 6), by applying MICA the number of PMUs for full network observability

Table 1 Number and locations of the required PMUs for IEEE test systems.

Test system	Number of required PMUs	Locations of PMUs	Redundancy
IEEE 14-bus	4	2,6,7,9	17
IEEE 30-bus	10	2,4,6,9,10,12,15,18,25,27	48
IEEE 57-bus	17	1, 4, 6, 9,15, 20, 24,28,31,32, 36,38,39,41,46,51,53	67
IEEE 118-bus	32	3,5,9,12,15,17,21,25,28,34,37,40,45,49,53,56,62,64,68,70,71,76,79,85,86,89,92,96,100,105,110,114	162

Table 3 Number and locations of the required PMUs for full network observability (using zero-injection).

Test system	Number of required PMUs	Locations of PMUs (using zero-injection)
IEEE 14-bus	3	2,6,9
IEEE 30-bus	7	2,4,10,12,15,18,27
IEEE 57-bus	13	1,9,10,13,15,20,25,29,32,38,49,53,56
IEEE 118-bus	27	3,11,12,17,21,23,28,34,37,40,45,49,52,56,62,75,77,80,85,86,89,92,96,100,105,110,115

Table 4 Simulation results for with/without zero-injection buses.

Test systems	Locations of zero-injection buses	Number of PMUs (ignoring zero-injection)	Number of PMUs (including zero-injection)
IEEE 14-bus	7	4	3
IEEE 30-bus	6,9,11,25,28	10	7
IEEE 57-bus	4,7,11,21,22,24,26,34,36,37,39,40,45,46,48	17	13
IEEE 118-bus	5,9,30,37,38,63,64,68,71,81	32	27

Table 5 Number of PMUs by MICA and other optimization methods (including zero-injection).

Method	14-bus	30-bus	57-bus	118-bus
Integer programming [10]	3	N/A	12	29
BPSO [16]	3	7	13	29
GA [24]	3	7	12	29
Tabu search [25]	3	N/A	13	N/A
MICA	3	7	13	27

(N/A: Not available)

Table 6 Number of PMUs using MICA compared with other methods in contingency.

Method/Systems	14-bus	30-bus	57-bus	118-bus
Integer quadratic programming [21]	N/A	21	33	68
MICA	7	14	21	62
Ref. [20]	7	15	22	62

Table 7 Comparison of the measurement redundancy value of the proposed algorithm with other methods in normal operating mode.

Method/Systems	14-bus (3 PMU)	30-bus (7 PMU)
Proposed method (MICA)	16	39
BPSO [16]	16	34
BIP [26]	16	36
GA [27]	16	36

in contingency is clearly reduced. Using the proposed method moreover CPU time, the number of PMUs is reduced in some IEEE test systems (particularly, on large power networks).

5. Conclusion

This paper proposed a new algorithm for OPP solution in power systems. MICA-based method is used to determine optimal locations of PMUs. PMU placement problem don't have a unique solution. Depending on the starting point, the developed optimization scheme may generate different sets of optimal solutions. In order to obtain the best solution, measurement redundancy must be maximized. In this study, in addition to the best position for PMUs, measurement redundancy is achievable. This method is tested on four systems namely IEEE 14, 30, 57, and 118-bus test systems, to evaluate the optimal locations of PMUs. Results showed that MICA is more effective than other methods investigated in this paper in terms of decreasing objective function.

References

[1] R.F. Nuqui, A.G. Phadke, Phasor measurement unit placement techniques for complete and incomplete observability, IEEE Trans. Power Deliv. 20 (2005) 2381–2388.
[2] A.G. Phadke, J.S. Thorp, K.J. Karimi, State estimation with phasor measurements, IEEE Trans. Power Syst. 1 (1) (1986) 233–241.
[3] B.K. Saha Roy, A.K. Sinha, A.K. Pradhan, An optimal PMU placement technique for power system observability, Int. J. Electr. Power Energy Syst. 42 (1) (2012) 71–77.
[4] S. Nourizadeh, S.A. NezamSarmadi, M.J. Karimi, A.M. Ranjbar, Power system restoration planning based on wide area measurement system, Int. J. Electr. Power Energy Syst. 43 (1) (2012) 526–530.
[5] J. Chen, A. Abur, Placement of PMUs to enable bad data detection in state estimation, IEEE Trans. Power Syst. 21 (4) (2006) 1608–1615.
[6] D.N. Kosterev, J. Esztergalyos, C.A. Stigers, Feasibility study of using synchronized phasor measurements for generator dropping controls in the Colstrip system, IEEE Trans. Power Syst. 13 (3) (1998) 755–761.
[7] S.E. Stanton, C. Slivinsky, K. Martin, J. Nordstrom, Application of phasor measurements and partial energy analysis in stabilizing large disturbances, IEEE Trans. Power Syst. 10 (1) (1995) 297–306.

[8] Z. Zhong, C. Xu, B.J. Billian, L. Zhang, S.J.S. Tsai, R.W. Conners, V.A. Centeno, A.G. Phadke, Y. Liu, Power system frequency monitoring network (FNET) implementation, IEEE Trans. Power Syst. 20 (4) (2005) 1914–1921.
[9] T.L. Baldwin, L. Mili, M.B. Boisen, R. Adapa, Power system observability with minimal phasor measurement placement, IEEE Trans. Power Syst. 8 (2) (1993) 707–715.
[10] B. Xu, A. Abur, Observability analysis and measurement placement for systems with PMUs, IEEE PES Power Syst. Conf. 2 (2004) 10–13.
[11] B. Milosevic, M. Begovic, Nondominated sorting genetic algorithm for optimal phasor measurement placement, IEEE Trans. Power Syst. 18 (1) (2003) 69–75.
[12] A. Abur, F.H. Magnago, Optimal meter placement for maintaining observability during single branch outage, IEEE Trans. Power Syst. 14 (4) (1999) 1273–1278.
[13] A. Monticelli, State Estimation in Electric Power Systems: A Generalized Approach, Power Electronics and Power Systems, May 1999.
[14] Y.M. Park, Y.H. Moon, J.B. Choo, T.W. Kwon, Design of reliable measurement system for state estimation, IEEE Trans. Power Syst. 3 (3) (1988) 830–836.
[15] E. Abiri, F. Rashidi, T. Niknam, M.R. Salehi, Optimal PMU placement method for complete topological observability of power system under various contingencies, Electr. Power Energy Syst. 61 (1) (2014) 585–593.
[16] A. Ahmadi, Y. Alinejad-Beromi, M. Moradi, Optimal PMU placement for power system observability using binary particle swarm optimization and considering measurement redundancy, Exp. Syst. Appl. 38 (6) (2011) 7263–7269.
[17] E. Atashpaz-Gargari, C. Lucas, Imperialist Competitive Algorithm: an algorithm for optimization inspired by imperialistic competition, IEEE Congr. Evol. Comput. (2007) 4661–4667.
[18] H. Duan, C. Xu, S. Liu, S. Shao, Template matching using chaotic imperialist competitive algorithm, Pattern Recog. Lett. 31 (13) (2010) 1868–1875.
[19] Y. Zhang, Y. Wang, C. Peng, Improved Imperialist Competitive Algorithm for Constrained Optimization, in: IEEE Conf., Computer Science-Technology and Applications1, 2009, pp. 204–207.
[20] M. Hajian, A.M. Ranjbar, T. Amraee, B. Mozafari, Optimal placement of PMUs to maintain network observability using a modified BPSO algorithm, Int. J. Electr. Power Energy Syst. 33 (1) (2011) 28–34.
[21] S. Chakrabarti, E. Kyriakides, Optimal placement of phasor measurement units for power system observability, IEEE Trans. Power Syst. 23 (3) (2008) 1433–1440.
[22] R. Kavasseri, S.K. Srinivasan, Joint placement of phasor and power flow measurements for observability of power systems, IEEE Trans. Power Syst. 26 (4) (2011) 1929–1936.
[23] F. Aminifar, C. Lucas, A. Khodaei, M. Fotuhi-Firuzabad, Optimal placement of phasor measurement units using immunity genetic algorithm, IEEE Trans. Power Deliv. 24 (3) (2009) 1014–1020.
[24] F.J. Marın, F. Garcıa-Lagos, G. Joya, F. Sandoval, Genetic algorithms for optimal placement of phasor measurement units in electric networks, Electron. Lett. 39 (19) (2003) 1403–1405.
[25] J. Peng, Y. Sun, H.F. Wang, Optimal PMU placement for full network observability using Tabu search algorithm, Elect. Power Syst. Res. 28 (4) (2006) 223–231.
[26] S.M. Mahaei, M. Tarafdar Hagh, "Minimizing the number of PMUs and their optimal placement in power systems", Electr. Power Syst. Res. 83 (2012) 66–72.
[27] F.J. Marin, F. Garcia-Lagos, G. Joya, F. Sandoval, Genetic algorithms for optimal placement of phasor measurement units in electrical networks, Electron. Lett. 39 (2003) 1403–1405.