https://ntrs.nasa.gov/search.jsp?R=19670006812 2020-03-24T02:01:30+00:00Z

JPL ENTRY VEHICLE DESIGN

COMPUTER PROGRAM USERS' MANUAL

Prepared by

SPACE SYSTEMS DIVISION
AVCO CORPORATION
Lowell, Massachusetts

AVSSD-0001-66-RR
Contract JPL 951070

THIS REPORT WAS PREPARED IN ACCORDANCE WITH JPL CONTRACT 951070. IT IS SUBMITTED IN PARTIAL FULFILLMENT OF THIS CONTRACT.

26 May 1966

FACILITY FORM 602
N67 13141 (ACCESSION NUMBER)
682 (PAGES)
CR-80525 (NASA CR OR TMX OR AD NUMBER)
(THRU) 1
(CODE) 08
(CATEGORY)

Prepared for

JET PROPULSION LABORATORY
CALIFORNIA INSTITUTE OF TECHNOLOGY
Pasadena, California

Reproduced by
NATIONAL TECHNICAL
INFORMATION SERVICE
US Department of Commerce
Springfield, VA 22151

JPL ENTRY VEHICLE DESIGN

COMPUTER PROGRAM USERS' MANUAL

Prepared by

SPACE SYSTEMS DIVISION
AVCO CORPORATION
Lowell, Massachusetts

AVSSD-0001-66-RR
Contract JPL 951070
BOOK I

THIS REPORT WAS PREPARED IN ACCORDANCE WITH JPL CONTRACT 951070. IT IS SUBMITTED IN PARTIAL FULFILLMENT OF THIS CONTRACT.

Copyright 1966

26 May 1966

JPL REV. 1 DEC 1966

APPROVED

P. Levine

P. Levine
Associate Manager
Special Projects

Prepared for

JET PROPULSION LABORATORY
CALIFORNIA INSTITUTE OF TECHNOLOGY
Pasadena, California

This work was performed for the Jet Propulsion Laboratory, California Institute of Technology, sponsored by the National Aeronautics and Space Administration under Contract NAS7-100.

RE-ORDER No. 66-47

FOREWORD

This Program Users Manual and the associated computer programs represent the final objectives of JPL Contract 951070. Several of the computer programs covered in the manual were largely developed under a prior contract (JPL-950626) and are partially described in the final report Avco/RAD Mars Venus Capsule Parameter Study, Vol. I, "Introduction and Analysis," TR-64-1, dated 21 March 1964.

The two JPL contracts leading to the development of the computer programs and the Users Manual were performed in the Advanced Space Systems Directorate at the Space Systems Division of Avco, Lowell, Massachusetts. Mr. P. Levine was the Project Engineer responsible for all technical work, and was assisted by other members of Avco's technical staff, including Messrs. P. Dicarlo, A. Robb, M. Russell, J. Cloutier, O. Zappa, M. Moge, J. Brown, P. Norton, G. Waldman, J. Serpico, R. Davis, and D. Flinn. The programming was done principally by Miss S. Sillers, Mr. D. Gillespie and Mr. J. Klugerman of Avco's Technical Programming Staff with assistance from Messrs. A. Picado, M. Greenberg, E. Sova, C. Berndtson, and with overall guidance from Dr. J. Warga, Manager of the Mathematics Department.

Minor typographical corrections made by JPL 1 December 1966. The following pages are affected:

Program 1880; pg 16, 23, 48, 49, 67, 69
Program 1882; pg 31, 47, 48
Program 1883; pg 33, 50
Program 1885; pg 3, 12, 18, 92

2<

3

CONTENTS

This manual has been divided into a number of sections, each treated as a separate document with its own table of contents and list of illustrations. The sections are listed below, and each section may be easily located by referring to its tabbed cover.

BOOK I

INTRODUCTION

- Objective
- Information Flow
- Program Format
- Programming Method

PROGRAM 1880

- Trajectory Kinematics
- Rigid Body Dynamics
- Laminar Heating Pulse
- Turbulent Heating Pulse
- Radiant Heating Pulse
- Loads

PROGRAM 1881

- Newtonian Coefficients
- Radii of Gyration

PROGRAM 1882

- Parachute System Size and Weight
- Impact System Size and Weight
- Packaging
- Internal Structure
- Center of Gravity
- Moments of Inertia

PROGRAM 1883

- Gas Dynamics
- Radiation Heating

PROGRAM 1884

- Heat Shield Weight
- Ablated Weight
- Insulation Weight

PROGRAM 1885

- Pressure Distributions
- Heating Distributions
- Shock Shape

PROGRAM 1886

- Buckling of Shells
- Structural Weight

SPECIAL ROUTINES

- Mathematical Routines
- Numerical Methods

BOOK II

PROGRAM 1887

- Integrated Design Program
- Linking Programs 1880, 1882, 1884, 1885, and 1886
- Component Weights
- Center of Gravity
- Moments of Inertia

PROGRAM 1888

- Displacement and Bending of Shells
- Structure Weight

PROGRAM 1889

- Integrated Design Program
- Linking Programs 1880, 1882, 1884, 1885, 1886, and 1888
- Component Weights
- Center of Gravity
- Moments of Inertia

INTRODUCTION

A. OBJECTIVE

The objective of this manual is to provide the program user with the necessary understanding of the approximations contained in the series of entry vehicle design programs developed under contracts JPL 950626 and 951070 and of the input procedures, so that the programs can be utilized with ease and confidence. In view of the stated objective, the manual contains a description of each program and its specific purpose. The mathematical model used in each program and a list of basic limitations is provided, so that the user can establish the applicability of the program to the particular problem at hand.

Should the program user wish additional information about the calculations being performed in the program, the specific equations which are programmed are provided. Furthermore, should questions arise as to the manner in which the programming was done, a section describing the IBM routines is also provided in the manual.

The intent of the set of computer programs is to ascertain the effects of all important parameters known to influence significantly the choice of vehicle shape and the calculation of the heat shield, structural, descent, and landing system weights. To cover the complete design problem, one must consider the interrelated aspects of the vehicle aerodynamics, heat transfer, thermal protection, and structural design. Furthermore, the entry problem is often bounded by overall systems considerations as to vehicle diameter and weight limitations, range of entry conditions, descent and impact system requirements, and special heat shield and structure material and shape requirements.

Although it is indeed commendable to achieve a complete set of computer programs which utilize the very "best" calculation models, the use of such a set of programs would not be compatible with the overall objectives to provide a set of computer programs suitable for preliminary tradeoff and parametric studies. A compromise was sought in formulating the computer programs, whereby the necessary inputs are not unduly excessive and are readily avail-

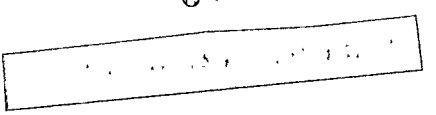

able. Programming compromises were also needed to avoid excessive computational time and wasteful generation of information that is not directly usable for the problem at hand. The computer programs are not intended to be used for detailed design studies but rather to screen the range of design parameters, to narrow their scope, and to establish trends.

B. INFORMATION FLOW

The thermo-structural design problem of evolving the heat shield and structural weights centers about the heating and loads predictions arising from the entry trajectory calculations. The degree of sophistication in the whole design approach is therefore related to the nature of the approximations used in computing the trajectory. The simplest trajectory approximation considers the vehicle as a particle without lift and of constant drag coefficient. For the particle trajectory calculation, the exact shape of the vehicle is not necessary to compute the trajectory as the entry vehicle is completely characterized by its ballistic coefficient ($M/C_D A$).

The limitations of a particle trajectory are often prohibitive for the prediction of accurate heating and loads environment, except in the cases of spherical bodies or where the entry angle of attack and angular rates are very small. Hence, in the most general case, an aerodynamic configuration and the corresponding aerodynamic force and moment coefficients must be assessed prior to a trajectory calculation. Program 1881 provides a first estimate of the hypersonic aerodynamic coefficients based on Newtonian flow theory if wind tunnel data is not available. Frequently, limited test data is sufficient for preliminary design studies when combined with the results of Program 1881.

Specification of the entry vehicle geometry provides only part of the information necessary to calculate the angle-of-attack motions during entry. A major aspect of the entry motion centers about the vehicle's stability, which is highly dependent on the center-of-gravity location and the moments of inertia. The first estimate of the center of gravity and the corresponding moments of inertia can be obtained from Program 1881, based on prescribed stability criteria. As the preliminary design studies progress, the estimates of center of gravity and moments of inertia must be updated and certain changes could significantly alter the entry vehicle's stability and further change the heating and loads environments. The information flow diagram depicted in Figure 1, indicates the manner in which Program 1881 can provide aerodynamic coefficients and the first pass estimates of the center of gravity (XCG) and the moments of inertia about the roll and pitch axes given in terms of the respective radii of gyration (RGX) and (RGY). The trajectory computation performed by Program 1880 provides the angle of attack, velocity, and altitude history during entry. The variation of the drag and lift forces arising from the angle of attack motions is computed, and the effect of their variation on the trajectory kinematics is accounted for. As part of Program 1880, dynamic pressure

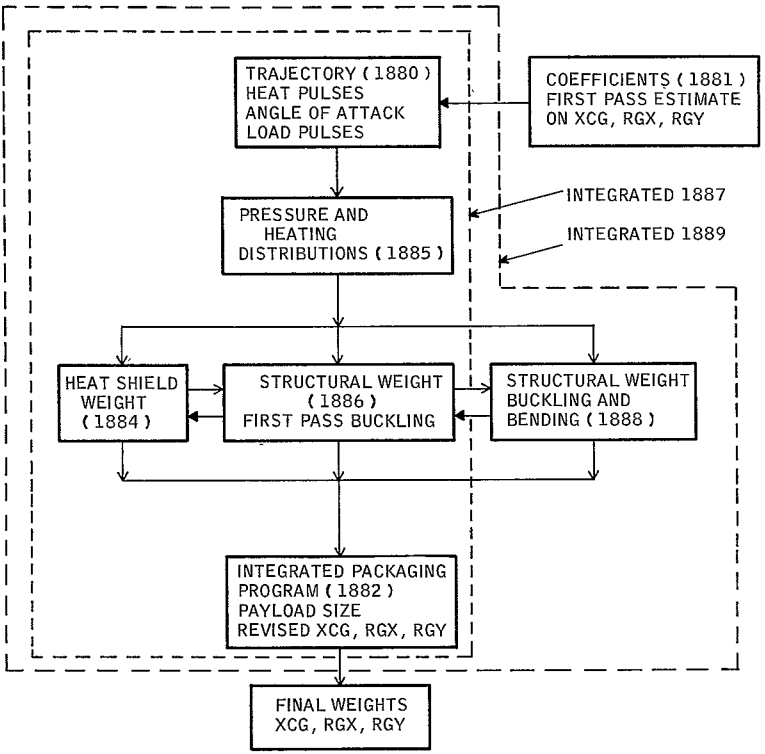

Figure 1 INFORMATION FLOW WITHIN VEHICLE DESIGN PROGRAMS (XCG = DISTANCE OF CG FROM STAGNATION POINT, RGX, RGY = RADII OF GYRATION ABOUT X, AND Y AXES, RESPECTIVELY)

and convective and radiative heat pulses are computed based on the instantaneous flight conditions; hence, the heating and loads environment is related to the vehicle dynamics which, in turn, depends on the estimates of the coefficients, center of gravity, and the moments of inertia.

The heat pulses calculated in Program 1880 are considered to be reference values, and the heating at a point of the body is expressible as a fraction (or multiple) of this value. Similarly, the pressures about the body are expressible as fractions (or multiples) of the dynamic pressure. The factors by which the reference pulses evolved from Program 1880 must be multiplied to provide the local pressure and heating may be found using Program 1885, if test data is unavailable. As shown in Figure 1, the output of Programs 1880 and 1885 are required simultaneously to compute the first pass on the structural weight. Program 1885 requires the vehicle geometry, atmosphere composition, and flight conditions as input, as well as the angles of attack for which the pressure and heating distributions are required. The output of Program 1885 is set forth as factors which can be applied directly to the heating and dynamic pressure pulses using the results of Program 1880. The distributions of Program 1880 are given for the windward and leeward meridians only. In actuality, a point on the vehicle is subject to a heating and loads environment which is affected by the roll attitude of the vehicle as well as its angle of attack. From the viewpoint of structural design, identification of the roll history of a particular point on a shell is unnecessary, provided thermal effects are not important. In order to perform an exact heat shield analysis, a streamline pattern around the complete vehicle would be required and a statistical treatment of the entry conditions would generally be required to establish the design requirements. With the view of obtaining preliminary design evaluations with assurance that the heat shield weights will be conservative, a simple approach can be taken (and is used in Programs 1887 and 1889) which considers the heating on the vehicle as if it were in a lunar motion utilizing the maximum angle-of-attack envelope generated by Program 1880.

An important structural consideration is that environments obtained from other trajectories on launch conditions may be more critical than the one for which the heating environment is most severe. By permitting optional inputs on peak dynamic pressure and deceleration (or acceleration) arbitrary combinations of heating and loads environments can be studied.

The information flow diagram of Figure 1, indicates that the appropriate outputs of Programs 1880 and 1885 are input to Program 1886. In addition, structural materials data and design criteria are input for Program 1886. Program 1886 provides for several options of construction: sandwich, stiffened, or monocoque. The failure criteria considers buckling and yield stress with further limitations due to minimum gage.

As the structural weight may be dependent on its temperature rise due to loss of strength at elevated temperatures, an interaction exists between the heat shield and the structural analyses. Furthermore, the heat shield interacts with the structural calculation by creating inertial loads on the structure.

Following the initial sizing of the structure, from Program 1886, and the heat pulses via Programs 1880 and 1885, sufficient information is on hand to perform the heat shield analysis. Program 1884 calculates the heat shield requirements, if indeed one is needed. The heat shield material properties and design criteria are required input as well as the results of Programs 1880 and 1885. There are several interaction mechanisms between the heat shield and structure, two of which are noted above; hence, the flow diagram of Figure 1 indicates a thermo-structural loop.

The internal payload is dependent on the total entry weight, the heat shield and structural weight, internal structural weight, and various system constraints placed on the descent and impact systems. Program 1882 integrates the system constraints and the results of Programs 1884 and 1886 to determine the net usable payload weight. In order to provide sufficient flexibility in a program of this sort, numerous options are possible, e.g. single chute, two parachutes, parachute and retro-rocket combinations, spherical payloads, cylindrical payloads, and conical payloads. System constraints (as impact deceleration limits) are inputs to Program 1882. Upon solving for the weight of the subsystem and determing the size and weight of each element, and of the payload, a packaging calculation is performed to ascertain whether the payload fits into the vehicle satisfactorily and provides a suitable center-of-gravity position. In addition, the overall moments of inertia are computed based on the detailed heat shield and structures and subsystems information evolved. As noted at the very outset, the initial estimates of center of gravity and moments of inertia may be sufficient for preliminary design purposes; however, the refined values arising from Program 1882 can now be tested by rerunning Program 1880 and observing the changes in the heating and loads environment. If the heating and loads change significantly due to the moment of inertia and center-of-gravity changes, then a complete iteration on the structure, heat shield, and subsystem weights is required.

The last step in the design study is the complete shell analysis by Program 1888, including the effects of payload attachment, bending, and shear. In order to perform this analysis, detailed pressure distribution information is required for which Program 1885 may be used. The inputs to Program 1888 include the preliminary structural sizing and the heat shield thicknesses, as well as the structural material properties and failure criteria. As a result of the refined structural analyses of Program 1888, any significant changes in structural weight can alter the complete internal structure and subsystem weight breakdown, requiring further iteration on these weights.

The final overall loop, including Programs 1888 and 1887, is considered as Program 1889. The input of Program 1889 is clearly the input and output of all the other programs and/or experimental data when available. The results of Program 1889 are the complete vehicle weight breakdown of the heat shield, structure, internal structure, descent system, impact system, and usable payload. Program 1889 closes the aero-thermo-structures-systems loop, and as such arrives at a preliminary design suitable for a particular entry problem.

C. PROGRAM FORMAT

A primary objective sought throughout all the programs is the achievement of uniformity of format, such as notation, units, and input procedures. The problem of units arises due to the multidiscipline nature of the various programs. In dealing with each program a set of units was established which appeared both convenient in that they are in widespread use and logical. In dealing with gas dynamics and atmosphere calculations, temperature is commonly given in degrees Kelvin (^{o}K), whereas in dealing with the heat shield and structure calculations, temperatures are commonly given in degrees Fahrenheit (^{o}F).

The aerodynamicist deals with density in slugs/ft^3, whereas the thermodynamicist and structural analyst prefers lb (mass)/ft^3 and these conventions are observed. The gas dynamicist deals with pressures in terms of atmospheres, the aerodynamicist in PSI or PSF, and similarly the thermo- and structural analysts. The units of length are restricted to either feet or inches throughout the programs.

D. PROGRAMMING METHOD

All programs are written in Fortran IV computer language. All data is read into the computer through use of the NAMELIST feature of Fortran IV. The use of machine language subroutines (other than the standard IBM library subroutines) are avoided whenever possible. All Fortran IV input and output statements refer to specific logical tape units.

The program linking for 1887 and 1889 employs the IBSYS overlay feature. As much independence as possible is retained among the links.

This users' manual provides input forms and the Fortran variable names of input and output quantities. This manual includes sample results, along with instructions for preparing data and running the programs.

TRAJECTORY PROGRAM (1880)

CONTENTS

I.	INTRODUCTION	1
	A. General Description	1
	B. Calculation Model	1
	C. Program Limitations	14
II.	USAGE	15
	A. Input Definitions	15
	B. Input Procedures	24
	C. Output Definitions	36
	D. Sample Problem	38
	E. Diagnostics	39
III.	COMPUTATIONS	66
	A. Block Diagram	66
	B. Symbols	67
	C. Equations	67
IV.	IBM ROUTINES	78
	A. Program Flow	78
	B. Common Storage	79
	C. Subroutines	84
	D. Main Program	88
	E. Significant Equations	93
V.	REFERENCES	101

ILLUSTRATIONS

Figure	1	Coordinate System for Entry Trajectories	3
	2	Aerodynamic Coefficients Conventions	4
	3	Trajectory Comparisons with Six Degree of Freedom Results	8, 9
	4	Stagnation Point Heating Comparisons with Data	11
	5	Radiation Heating Comparisons with Data	12
	6	Nonequilibrium Radiation Calculation Model	13
	7	Stagnation Point Velocity Gradient with Varying Bluntness and Density Ratio	29
	8	Stagnation Point Shock Standoff Distance with Varying Bluntness and Density Ratio	30
	9	Hypersonic Correlations of Stagnation Point Standoff Distance and Velocity Gradient	31
	10	Methods for Estimating VGFDR and DEL/RC for Various Nose Shapes	32
	11	Viscosity-Temperature Model	34
	12	Block Diagram Illustrating Operation of Program 1880	66
	13	Flow Diagram of Program 1880	78

TABLES

Table I		Mars Model Atmospheres	26

I. INTRODUCTION

A. GENERAL DESCRIPTION

The purpose of this program is to determine the flight path, angle of attack envelope, heating, and loads as a function of time for an axisymmetric vehicle during its entry trajectory into planetary atmospheres. The general inputs required include:

1. Vehicle mass and moment of inertia data
2. Aerodynamic coefficients
3. Entry conditions
4. Planet and atmospheric data
5. Heating factors based on vehicle shape.

Convective heat pulses are computed at the stagnation point (laminar) and at the sonic point (laminar and turbulent). In addition, both equilibrium and non-equilibrium radiative heat pulses are computed.

B. CALCULATION MODEL

A detailed description at the calculation model is given in Reference 1. A brief summary description is provided herein for the program user.

1. Coordinate Systems

The treatment of the force equations during atmospheric entry is simplified by considering a coordinate system which uses only the elevation angle gamma to define its orientation relative to the local horizontal space plane. A heading angle is unnecessary because of the assumption of a spherical, nonrotating planet The velocity vector is specified by its scalar value and the elevation angle γ measured positive above the horizon.

Since planar trajectories are of primary interest, only two equations of motion are required to calculate the flight path of the vehicle in the plane of the velocity and gravity vectors.

The body axes are oriented with respect to a system of wind axes using a conventional system of Euler angles. The curvature of the flight path is reflected in a rotation of the wind axes with respect to a set of fixed (inertial) axes.

The coordinate systems used in deriving the force and moment equations are depicted in Figure 1. The wind axes are X_o, Y_o, and Z_o, where X_o coincides with the velocity vector, and Z_o lies in the plane of the velocity and gravity vectors. The origin of the body axes X_B, Y_B, Z_B, and of the wind axes are taken at the c.g. of the vehicle. The total angle of attack α' is the angle between the body axis X_B and the velocity vector (or X_o).

2. Aerodynamic Coefficients

The aerodynamic coefficients utilized in the program may be either experimental or theoretical values. The coefficients can be input as a double table of angle of attack and Mach number dependency, including C_N, C_X, C_m (or X_{cp}), $(C_{m_q} + C_{m_{\dot{\alpha}}})$. The coefficients can also be input to solve the angle-of-attack motions using linear coefficients in which case the values are required only at zero angle of attack, but as functions of Mach number including C_D, C_{L_α}, C_{m_α}, and $C_{m_q} + C_{m_{\dot{\alpha}}}$. The sign and axes conventions used in the aerodynamic coefficients are depicted in Figure 2.

The damping coefficient is nondimensionalized by $\frac{d}{2V}$, for example,

$$C_{m_{\dot{\alpha}}} = \frac{\partial C_m}{\partial\left(\frac{\dot{\alpha}\, d}{2V}\right)}$$

The reference area corresponds to the reference length, which is the vehicle diameter.

3. Force Equations

The calculation model assumes a spherical nonrotating planet. The force equations are written in wind axes (X_o, Y_o, Z_o) aligned along the instantaneous velocity vector as shown in Figure 1. The side force equation was omitted, and the resulting drag and lift equations describe the motion of the vehicle's center of gravity in the instantaneous plane of the trajectory.

The component of the total lift that lies in the plane of the trajectory depends on the orientation of the vehicle. Using a set of Euler angles, ψ, θ, φ as shown in Figure 1, which determine the orientation of the body fixed axes (X_B, Y_B, Z_B) with respect to the wind axes, the force equations have the form,

DRAG: $\quad m\dot{V} = - C_D Aq - mg \sin \gamma$

LIFT: (In the plane of $\bar{g}$ and $\bar{V}$)

$$m V \dot{\gamma} = \frac{mV^2}{R_Z} \cos \gamma - mg \cos \gamma + C_L Aq \frac{\sin \theta}{\sin \alpha'}$$

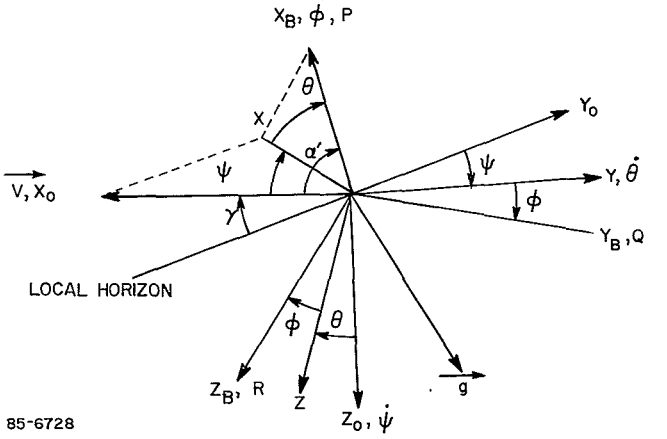

Figure 1 COORDINATE SYSTEM FOR ENTRY TRAJECTORIES

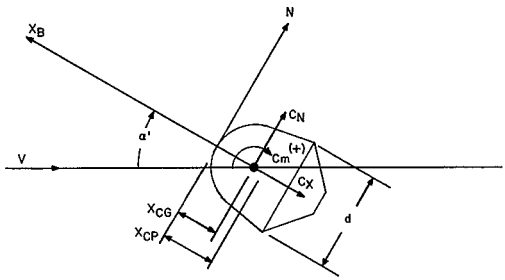

AXISYMMETRIC COEFFICIENT CONVENTIONS

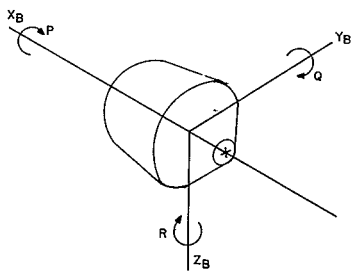

ANGULAR RATE CONVENTIONS

65-11581

Figure 2 AERODYNAMIC COEFFICIENTS CONVENTIONS

where α' is the total angle of attack and is related to the Euler angles by,

$$\sin^2 \alpha' = \sin^2 \psi + \cos^2 \psi \sin^2 \theta$$

The gravity vector is taken as radial, and pointed towards the center of the planet. The gravitational field assumes an inverse square relationship. The force coefficients required to solve the force equations can be specified as a function of angle of attack and Mach number.

4. Moment Equations

The moment equations are derived using the body axes indicated in Figure 1 and the total angular rates are taken with respect to a fixed set of axes. The angular rates are divided into two parts; those with respect to the wind axes, and those due to the motion of wind axes with respect to the fixed axes. The motion of the body axes with respect to the wind axes is given by the changes in Euler angles and also in a set of rate components P, Q, R about each axis, where P, Q, R are related only to the changes in the Euler angles. The additional angular rate effects arise because of flight path curvature (changes in the direction of the velocity vector) due to lift and gravity.

The changes in flight path curvature due to lift is used in its entirety, i.e., the total lift force is used including the out of plane component. The analysis proceeds along the lines of Reference 1. An order of magnitude analysis is made and only those terms which could affect the results significantly are retained.

The total angular rate $\vec{\Omega}$ with respect to a set of fixed axes has components P', Q', R' along the body axes such that,

$$\vec{\Omega} = \bar{i}\, P' + \bar{j}\, Q' + \bar{k}\, R' \quad .$$

The calculation model is restricted to axisymmetric ballistic vehicles for which the products of inertia are zero, and $I_Y = I_Z$, hence, the external moment vector is related to the rate of change of angular momentum by

$$\vec{M} = \bar{i}\, I_X \dot{P}' + \bar{j} \left[I_Y \dot{Q}' - P'R' (I_Y - I_X) \right] + \bar{k} \left[I_Y \dot{R}' + P'Q' (I_Y - I_X) \right] \quad .$$

The external moment vector may be expressed as

$$\vec{M} = M' \left(\frac{\bar{j} \sin \alpha}{\sin \alpha'} + \frac{\bar{k} \sin \beta}{\sin \alpha'} \right) + N' \left(-\frac{\bar{j} \sin \beta}{\sin \alpha'} + \frac{\bar{k} \sin \alpha}{\sin \alpha'} \right)$$

The aerodynamic moments (M') and (N') are given approximately by

$$M' = C_m qAd + (C_{m_q} + C_{m_{\dot\alpha}}) \frac{qAd^2}{2V} \dot\alpha' \; ; \; N' = (C_{m_q} + C_{m_{\dot\alpha}}) \frac{qAd^2}{2V} \dot\eta \sin \alpha' \; .$$

where $\dot\eta$ is the rate of precession of the plane containing $\bar V$ and $\bar i$.

The wind axes pitch about the Y_o axis due to gravity at a rate,

$$\dot\gamma_T = - \frac{g \cos \gamma}{V}$$

(Gravity term in above lift equation.)

Due to lift, the flight path curvature can be out of the plane of the trajectory and is given by

$$\dot\gamma_L = \frac{L}{mV}$$

(Lift term in above lift equation is in-plane component only.)

As $\bar{\dot\gamma}_L$ lies along $\bar M'$, the expressions for P', Q', R' can be written as,

$$P' = P + \dot\gamma_{TX}$$

$$Q' = Q + \dot\gamma_L \frac{\sin \alpha}{\sin \alpha'} + \dot\gamma_{TY}$$

$$R' = R + \dot\gamma_L \frac{\sin \beta}{\sin \alpha'} + \dot\gamma_{TZ}$$

where $\dot\gamma_{TX}$, $\dot\gamma_{TY}$ and $\dot\gamma_{TZ}$ are the components of $\dot\gamma_T$ along the body axes X_B, Y_B, and Z_B, respectively.

Introducing the further approximations,

$$\ddot\gamma_L = C_{L_\alpha} \frac{A}{m} q \frac{\dot\alpha'}{V}$$

$$\dot\gamma_L << \dot\alpha'$$

$$\dot\gamma_{TX} << P$$

then the resultant expression for the moment equations are,

$$\dot Q = \frac{qAd}{I_Y} \left[C_m \frac{\sin \alpha}{\sin \alpha'} + \frac{Qd}{V} \left(\frac{C_{m_q} + C_{m_{\dot\alpha}}}{2} - \frac{C_{L_\alpha} I_Y}{md^2} \right) \right] + PR \left(1 - \frac{I_X}{I_Y}\right)$$

$$- \frac{PI_X}{I_Y} \frac{C_L Aq}{mV} \frac{\sin \beta}{\sin \alpha'} + \frac{PI_X}{I_Y} \frac{g \cos \gamma}{V} (\sin \psi \sin \theta \cos \phi - \cos \psi \sin \phi)$$

$$\dot{R} = \frac{qAd}{I_Y}\left[C_m \frac{\sin\beta}{\sin\alpha'} + \frac{Rd}{V}\left(\frac{C_{m_q} + C_{m_{\dot{\alpha}}}}{2} - \frac{C_{L_\alpha} I_Y}{md^2}\right)\right] - PQ\left(1 - \frac{I_X}{I_Y}\right)$$

$$+ \frac{PI_X}{I_Y}\frac{C_L Aq}{mV}\frac{\sin\alpha}{\sin\alpha'} - \frac{PI_X}{I_Y}\frac{g\cos\gamma}{V}(\cos\psi\cos\varphi + \sin\psi\sin\theta\sin\varphi)$$

$$\dot{P} = 0$$

The moment equations display the coupling of the plunge damping term C_{L_α} frequently found, e.g., References 3, 4, and 5. It should be noted that the C_{L_α} is now a function of angle of attack (and also of Mach number if desired). The terms yielding the coupling effects of flight path curvature due to lift and gravity with spin have also been retained.

The occurrence of the C_{L_α} explicitly is of interest as the usual six-degree of freedom computation effectively computes C_{L_α} implicitly by interpolating C_N and C_X from input tables. Hence differences between the two formulations are likely at small values of $C_{m_q} + C_{m_{\dot{\alpha}}}$ and especially at large negative values of C_{L_α} where the C_{L_α} controls the angle-of-attack envelope below peak dynamic pressure. The present program provides for accurate simulation of C_{L_α} by direct input tables or by curve fitting computed values of C_L obtained from C_N and C_X input data.

To permit elementary studies of lifting vehicles, the ($\dot{Q}$) equation given above has the additional aerodynamic term,

$$\frac{-C_X \cdot Z_{CG}\, qAd}{I_Y} .$$

By input of the quantity Z_{CG}, a trim condition at other than zero angle of attack can be achieved, resulting in a lifting trajectory. The use of the off-set center of gravity is restricted to planar motions, i.e. zero spin, and zero sideslip angle.

The dynamic solution is programmed for the two moment equations discussed above and also for the linearized solution discussed in Reference 1. The adequacy of the approximate dynamical treatment for most practical entry problems of ballistic vehicles has been studied and comparisons made with six-degree-of-freedom solutions in Reference 1 (Vol. II) and a typical result is shown in Figure 3, for a planar oscillation and for a spin case.

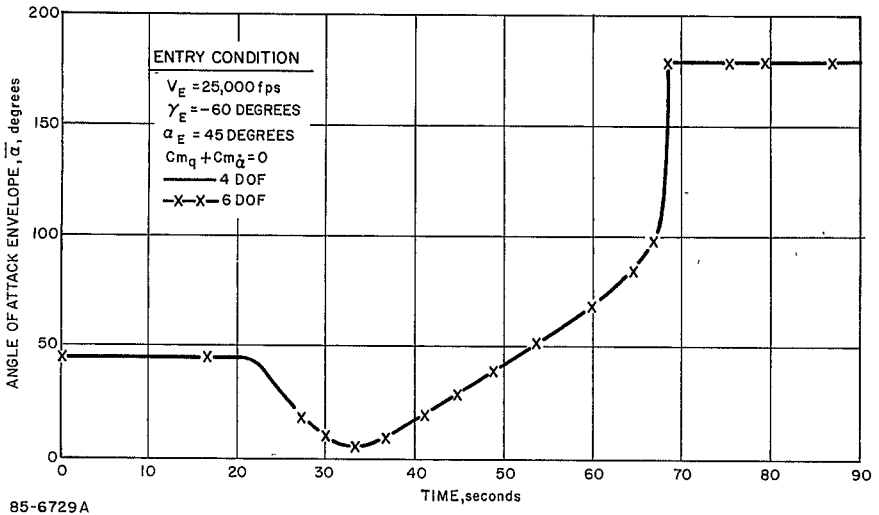

Figure 3a TRAJECTORY COMPARISONS WITH SIX DEGREE OF FREEDOM RESULTS

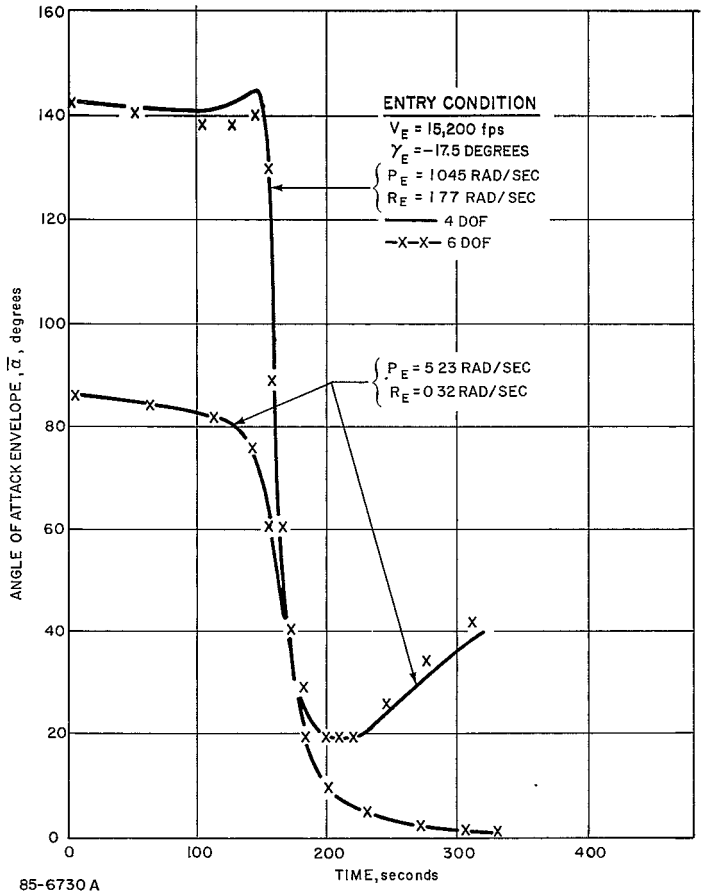

Figure 3b TRAJECTORY COMPARISONS WITH SIX DEGREE OF FREEDOM RESULTS

22A

5. Heat Pulses

Convective and radiative heat pulses are computed along the trajectory. The convective pulse at the stagnation point utilizes the stagnation point velocity gradient data for the particular shaped vehicle being studied. The stagnation heating is based on the correlations of Reference 1 for CO_2, N_2, O_2 mixtures. Turbulent heating at the sonic point is computed by testing against a specified local (not ambient) transition Reynolds number criterion. The turbulent heating correlation is for air as given by Detra.[2] Comparison of the program calculations with data of Reference 3 is shown for the stagnation point in Figure 4. Limited data on turbulent heating in N_2 - CO_2 mixtures given in Reference 4, indicates a negligible difference in the heat rates due to composition when compared with air data.

The equilibrium radiation heating is calculated via Program 1883 which is connected directly to the trajectory computation. A description of the equilibrium radiation model is given in Program 1883. A comparison of the program calculations with data and other predictions is given in Figure 5.

The nonequilibrium model is discussed in Reference 1 and summarized in Figure 6. The relative features of the model can be controlled using experimental data to adjust the ratios of I_{NE}/I_E by input of IRNE, and the extent of the nonequilibrium zone by input of KNE.

An alternate, nonequilibrium model is possible wherein the nonequilibrium radiation contribution is assumed to be independent of density (except for truncation effects) and only a function of velocity. A simplified model is utilized such that $I_{NE}\,\Delta_{NE} = f(V)$, with the nonequilibrium intensity specified as a function of velocity based on experimental data, e.g., References 5 and 6.

6. Summary of Calculation Model

The calculation model can be used to study any of the following problems.

a. Parachute Problem--The vehicle m/C_DA requirements for achieving a prescribed Mach number at/or prior to a specified altitude.

b. Vehicle Stability--The adequacy of the vehicle's stability as a function of entry pitch, yaw, roll rates, and angle of attack.

c. Vehicle Performance--The change in the trajectory, heating, and loads caused by the effects of the angle-of-attack motions on the flight path (velocity-altitude history).

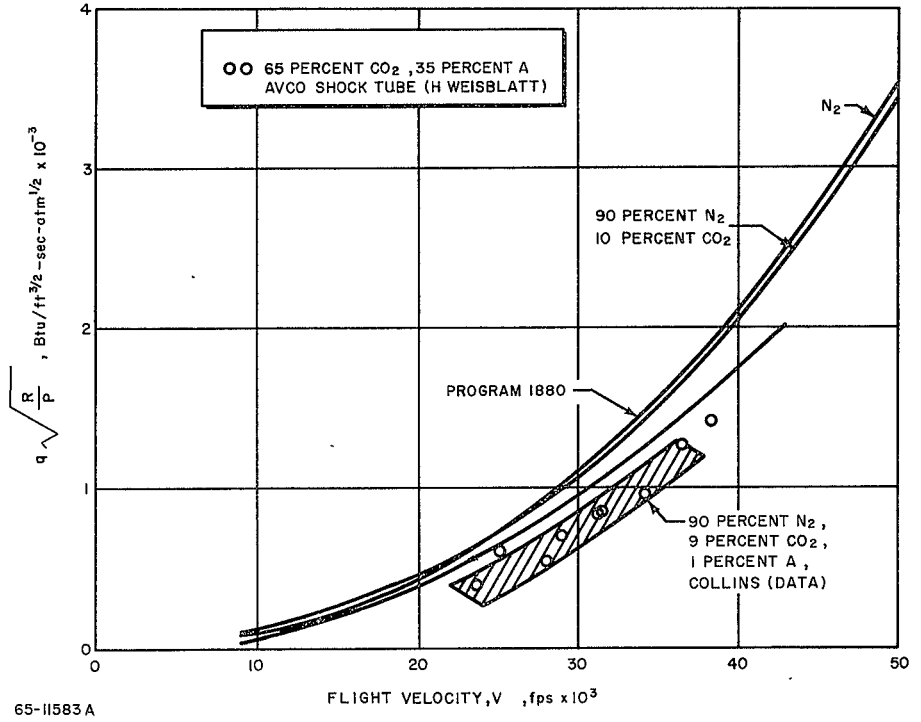

Figure 4 STAGNATION POINT HEATING COMPARISONS WITH DATA

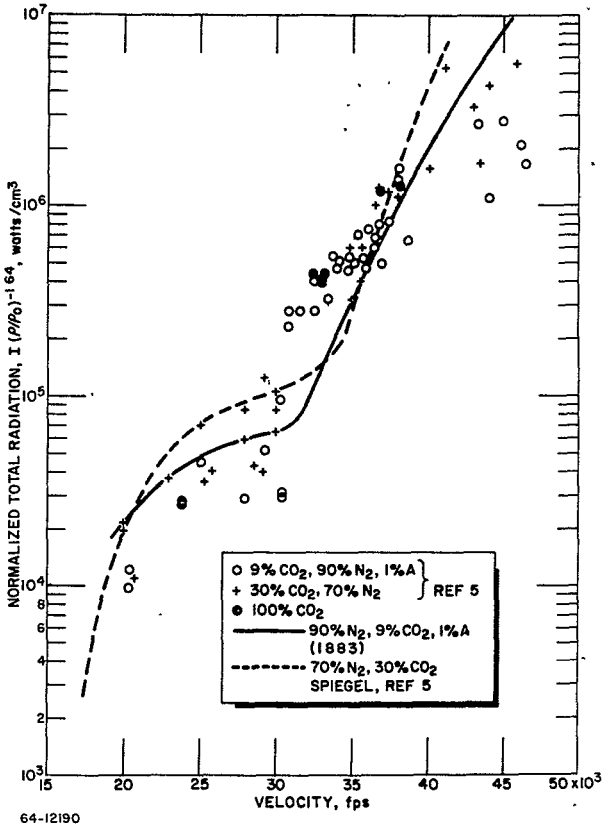

Figure 5 RADIATION HEATING COMPARISONS WITH DATA

25<

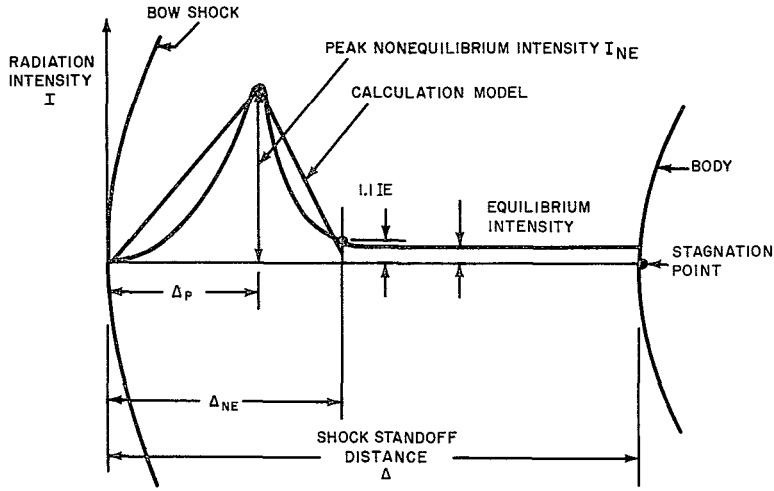

1880 INPUTS: IRNE, KNE

CORRELATION	SOURCE
$IE(\epsilon_I, N_I, T_S)$	PROGRAM 1883
$\Delta_P(\rho_A, V)$	EQ.67, REFS 5,13
$\Delta_{NE}(\rho_A, V, KNE)$	EQ.66, REFS 5,13
$\frac{I_{NE}}{I_E}$(IRNE)	REFS 5,13

65-11584

Figure 6 NONEQUILIBRIUM RADIATION CALCULATION MODEL

d. Convective Heating--The stagnation-point and sonic-point convective heating pulses as well as an indication of transition.

e. Radiative Heating--The stagnation-point equilibrium and nonequilibrium radiative heating pulses.

f. Loads--The dynamic pressure, and axial and normal load pulses.

g. Atmosphere--The effects of atmosphere composition and vertical structure on all the trajectory variables.

h. Planet--The effects of planet parameters on all the trajectory variables.

i. Scaling--The effects of changing vehicle diameter and/or mass.

C. PROGRAM LIMITATIONS

The calculation model imposes several basic limitations on the range of trajectory problems that can be simulated with the program. These limitations include:

1. The approximations utilized prevent the entry vehicle from developing an angle of attack due to flight path curvature alone; hence, vehicles entering with zero rates and $\alpha_e = 0$ or $\alpha_e = 180$ will remain at the same angle of attack throughout entry.

2. The vehicle motions which can be simulated are limited by the assumptions of an axisymmetric inertia ellipsoid (spin rate stays constant throughout entry).

RE-ORDER No. 66-47

II. USAGE

A. INPUT DEFINITIONS

Name	Preset Values	Symbol	Parameter	Units
ALAM	0.5	a_L	Density exponent in QS formula.	--
ALPCR	0.		Critical angle of attack; if angle of attack at peak dynamic pressure is < ALPCR, the dynamics computation switches to the linearized equations.	degrees
ALPHAE		α_e	Angle of attack at entry.	degrees
AR	89516.	R	Gas constant	ft^2/sec^2-mole-^oK
ATMØS			Number used to identify atmosphere used for the calculations.	--
ATRB	0.8	a_T	Density exponent used in QSTAR formula after transition occurs.	--
BLAM	0.	b_L	(Velocity/10^4)exponent used in QS formula. If = 0 (preset value), it is computed by the program to be 3.909 - .0229M where M is the molecular weight of the atmosphere.	--
BTRB	3.18	b_T	(Velocity/10^4) exponent used in QSTAR formula after transition occurs.	--
CASE			Number used to identify the case being run.	--
CDFM		C_D	Table of zero angle of attack drag coefficient variation as a function of Mach number only. Maximum number of entries = 10. See MØNLY.	--

Name	Preset Values	Symbol	Parameter	Units
CDRØP	2.		Number used to delete moment equations after peak dynamic pressure. Switches to MØNLY coefficients. When, $1/2\rho V^2 < CDR\text{Ø}P \left(\frac{m g_{sl}}{C_D A}\right)$.	--
CLAFM		C_{L_α}	Table of lift curve slope variation as a function of Mach number only. Used with MØNLY table; maximum number of entries = 10.	per radian
CMAFM		C_{m_α}	Table of pitching moment derivative $\left(\frac{\partial C_m}{\partial \alpha}\right)$, as a function of Mach number only. Used with MØNLY table; maximum number of entries = 10.	per radian
CMCØD		$\frac{X_{CM}}{d}$	Nondimensional center-of-gravity location for CMFA data.	--
CMFA		C_m	Table of pitching moment coefficient as a function of angle of attack and Mach number. Used with CMCØD and CMIN = 1.0. Maximum number of entries: 19 angles of attack (corresponding to TABAL) and 5 Mach numbers when used with MANDAL table.	--
CMIN	0.		Number which if > 0 provides the pitching moment from CMFA and CMCØD, and if ≤ 0 from XCPFA.	--
CMQFA		$C_{m_q} + C_{m_{\dot\alpha}}$	Table of damping coefficient, $\left(\frac{\partial C_m}{\partial \frac{Qd}{2V}}\right)$, as a function of angle of attack and Mach number. Maximum number of entries: 19 angles of attack (corresponding to TABAL) and 5 Mach numbers when used with MANDAL table.	per radian

External Name	Preset Values	Symbol	Parameter	Units
CMQFM		$C_{m_q} + C_{m_{\dot{\alpha}}}$	Table of damping coefficient variation as a function of Mach number only. Maximum number of entries = 10. Used with MØNLY table.	per radian
CNFA		C_N	Table of normal force coefficient specified as a function of angle of attack and Mach number. Maximum number of entries: 19 angles of attack (corresponding to TABAL) and 5 Mach numbers when used with MANDAL table.	--
CXFA		C_X	Table of axial force coefficient, specified as a function of angle of attack and Mach number. Maximum number of entries· 19 angles of attack (corresponding to TABAL) and 5 Mach numbers, when used with MANDAL table.	--
		d	Vehicle diameter (reference length).	feet
DATE			Number used to identify the problem being run.	--
DELMAC	0.5		When the Mach number ≤ 5, output will be provided whenever the difference in Mach number from the last output value is $\geq$ DELMAC	--
DELMT	0.00001		This is the lower limit in Δt to which the predictor-corrector integration method is allowed to cut Δt to improve accuracy. See description of ADAMS4.	--
DELØRC		Δ/R_C	Table of stagnation shock standoff distance $\left(\frac{\Delta}{D/2}\right)$ corresponding to TABDR. Maximum of 10 entries.	--

Name	Preset Values	Symbol	Parameter	Units
DELTAT	0.01		Initial Δt used by the predictor-corrector integration method. See description of ADAMS4.	sec
DIRNE			Total nonequilibrium radiation intensity. (Twice the body rate).	Btu/ft^2-sec
DNBND	0.001, 1.E-6, 0.01, 0.0001, 0.0001, 1.E-5, 1.E-5, 1.E-5		Array of lower limits used by the predictor-corrector subroutine ADAMS4, as accuracy bounds on V, γ, Z, Q, R, ψ, θ, φ.	--
FALR		L_1	Temperature gradient in troposphere expressed as a fraction of the adiabatic lapse rate.	--
GAME		γ_e	Entry flight path angle (positive up).	degrees
GSL		g_{SL}	Gravitational acceleration at the planet surface.	ft/sec^2
GTST	2.		When the reference convective heat pulse is $\geq$ 1, output will be provided if the difference in the current flight path angle from the last output value is $\geq$ GTST.	degrees
IPHEAT	0.		When IPHEAT $\geq$ 1, tables of time, QS, QSTAR, HM/RT$\emptyset$, and QRNE are provided on punched cards from logical Tape 7.	--
IPRINT	0.		When IPRINT $\geq$ 1, output is provided at each integration step. The angle of attack (not the envelope) is printed. Use of this option more than doubles running time and increases output by 3 to 4 orders of magnitude.	--
IPRQRD	0.		When IPRQRD is $\geq$ 1, the complete output (chemical composition, etc.) of each radiation heating calculation is provided.	--

Name	Preset Values	Symbol	Parameter	Units
IRNE	10.	I_{NE}/I_E	Nonequilibrium intensity ratio.	--
KNE	2.3		Multiplicative constant used to compute the nonequilibrium thickness Δ_{NE}.	--
LS	-5.		Sentinel used to control the predictor-corrector integration method, used for initialization and to follow the course of the integration. See description of ADAMS4.	--
LTH		L_{TH}	Temperature gradient in thermosphere.	^{o}K/ft
MANDAL			(Preset = 0 for coefficients as a function of α only). Mach number table (maximum 5 values) for coefficients as function of both Mach number and angle of attack. When this table is specified, tables CXFA, CNFA, CMQFA, and either XCPFA or CMFA must be specified for each Mach number in MANDAL. At Mach numbers below (or above) those specified in MANDAL table, program uses coefficients corresponding to lowest (or highest) Mach number listed.	--
MASS		m	Mass of vehicle.	slugs
MEMØ			Number, used to identify the problem being run.	--
MØNLY			Independent variable table of Mach numbers used to compute coefficients as a function of Mach number only. Maximum number of entries is 10. See CDFM, CMAFM, CLAFM, CMQFM.	--

Name	Preset Values	Symbol	Parameter	Units
MVE	1.		If MVE = 1.0 (preset value), the atmosphere is computed from the input parameters. If MVE = 2.0, the atmosphere is computed from tables in which the altitude (ZTBL) is the independent variable.	--
NPTST	51		Maximum number of lines of trajectory output per page.	line/page
PE		P_e	Spin rate at entry.	rad/sec
PTH		P_{TH}	Atmospheric pressure at base of thermosphere.	lb/ft^2
PTMAC	-100.		If PTMAC > 0, linearly interpolated values of the trajectory output quantities will be printed at the Mach number = PTMAC Do not use simultaneously with QDYPT (see below).	--
QDYPT	-100.		If QDYPT > 0, linearly interpolated values of the trajectory output quantities will be printed at the dynamic pressure = QDYPT . Do not use simultaneously with PTMAC (see above)	lb/ft^2
QE		Q_e	Pitch rate at entry.	rad/sec
QTST	200.		When the reference convective heat pulse is $\geq$ 1, output will be provided if the difference of the integrated reference convective heat pulse from the last output value is $\geq$ QTST.	Btu/ft^2
RE		R_e	Yaw rate at entry.	rad/sec
REYT	3.E5	R_{e_t}	Transition Reynolds number for QSTAR based on SSØD.	--

Name	Preset Values	Symbol	Parameter	Units
RGX		σ_x	Nondimensional radius of gyration for roll moment of inertia.	--
RGY		σ_y	Nondimensional radius of gyration for pitch moment of inertia.	--
RHØSL		ρ_{SL}	Density of the atmosphere at the planet surface.	$slug/ft^3$
RØTBL		ρ	Dependent variable table of density used with ZTBL to compute atmospheric density when MVE = 2.0 (see above). Maximum number of entries is 101.	$slug/ft^3$
RSL		R_{SL}	Radius of the planet.	feet
SSØD		S^*/d	Ratio of distance from sonic point to the stagnation point at zero angle of attack to the vehicle diameter.	--
TABAL		α	Independent variable of angle of attack used to compute coefficients as a function of Mach number and angle of attack. Maximum number of entries is 19.	degrees
TABDR		ρ_s/ρ_a	Independent variable table of stagnation point density ratios $(\rho_s / \rho_a)_s$ used with DELØRC (see above) and VGFDR (see below). Maximum number of values is 10.	--
TETBL		T	Dependent variable table of temperature used with ZTBL to compute atmospheric temperature when MVE = 2.0 (see above). Maximum number of entries is 101.	^oK
THF	1.		Turbulent heating factor used to compute QSTAR after transition has occurred.	--

Name	Preset Values	Symbol	Parameter	Units
TSL		T_{SL}	Atmospheric temperature at the planet surface.	^{o}K
TST		T_{ST}	Atmospheric temperature in the stratosphere.	^{o}K
TSTØP	1000.		Maximum permitted value of the independent variable time for the integration of the trajectory equations.	seconds
TZERØ	0.		Initial value of the independent variable time for the integration of the trajectory equations.	seconds
UPBND	0.01, 1.E-5, 0.1, 0.001, 0.001, 0.0001, 0.0001, 0.0001		Array of upper limits used by the predictor-corrector subroutine ADAMS4 as accuracy bounds on V, γ, Z, Q, R, ψ, θ, φ, respectively.	--
UPDN	0.2		Factor by which the predictor-corrector method increases or decreases $\Delta\tau$ (depending on accuracy) during the integration. See description of ADAMS4.	--
VE		V_e	Entry velocity.	ft/sec
VEHICL			Identification number for vehicle.	--
VIRNE			Velocity table used when DIRNE is specified maximum of 10 values.	ft/sec
VGFDR		$\frac{d}{2V}\left(\frac{du}{ds}\right)_s$	Dependent table of velocity gradient, used with TABDR (see above). Maximum number of entries is 10.	--

RE-ORDER NO. 66-417

Name	Preset Values	Symbol	Parameter	Units
VSTØPQ	12000.		The slowest velocity at which the radiation heating calculation will be done. It must be ≥ 5000.	ft/sec
VTST	600.		When the reference convective heat pulse is ≥ 1, output will be provided if the difference between the velocity and the last output velocity is ≥ VTEST.	ft/sec
XA			Mole fraction of molecular Argon in the atmosphere.	in
XC			Mole fraction of CO_2 in the atmosphere.	--
XCGØD			Center-of-gravity location of the vehicle as a fraction of vehicle diameter.	--
XCPFA			Aerodynamic center-of-pressure location as a fraction of vehicle diameter. This table as a function of angle of attack and Mach number is used to provide the pitching moment when CMIN = 0. Maximum number of entries: 19 angles of attack (corresponding to TABAL) and 5 Mach numbers when used with MANDAL.	--
XN			Mole fraction of N_2 in the atmosphere (must ≥ 0.001).	--
XØ			Mole fraction of O_2 in the atmosphere.	--
XPRIN	1		If the value of LS (see above) is 1.0, output will be provided in even intervals of XPRIN. Using this option will generally invalidate the angle-of-attack envelope values printed in the output.	sec

RE-ORDER No. 66-417

Name	Preset Values	Symbol	Parameter	Units
ZCGØD			Center-of-gravity offset.	feet
ZE		Z_e	Entry altitude.	feet
ZSTØP	0.		The integration of the trajectory equations is terminated when the value of the dependent variable Z is < ZSTØP	--
ZTBL			Independent variable table of altitude used with RØTBL and TETBL to compute atmospheric properties when MVE = 2.0 (see above). Maximum number of entries is 101.	feet
ZTST	2.E4		Where the reference convective heat pulse is > 1, output will be provided if the change in altitude is $\geq$ ZTEST.	feet

B. INPUT PROCEDURES

1. General

a. Decimal points can be used on all inputs. However, omitting decimal points on integers will not cause difficulty.

b. A preset variable need not be input unless a different value is desired.

c. After the first data case of a set of stacked cases, only changed inputs must be specified.

d. Inputs DATE, MEMØ, CASE, ATMØS, and VEHICL have no effect on the computation and may be omitted. They appear at the top of the trajectory printout as a convenience in identification.

e. All independent variable tables must be specified in monotonic ascending order.

f. The output is adjusted to allow for a maximum of 150 lines of printout; the amount of printout is adjusted by optional program controls.

g. A set of computer input forms are provided for the user. All the data shown on the form is keypunched when the variable is supplied.

2. Atmosphere

a. The atmosphere may be specified by either of two methods, parametric or tables. Optional input MVE, preset for parametric inputs, selects the input method.

b. The parametric input method is more convenient for theoretical atmospheres such as JPL Mars models G, H, I, J, and K[7] and NASA Mars models 1, 2, and 3[9]. The program inputs are readily obtainable from the definitions of these atmospheres (see Table I).

c. For precise atmosphere specification, e.g. Earth, complete tables of density and temperature versus altitude may be input.

d. Additional to the temperature and density properties of the atmosphere, the composition is input as mole fractions of oxygen, nitrogen, carbon dioxide, and argon. The sum of these fractions must equal 1. The nitrogen fraction must not be less than 0.001.

3. Calculation Time

The input CDRØP was introduced to permit a reduction in computation time where a vehicle undergoing large oscillations has reached close to terminal velocity at high altitude. Calculation of the angle of attack motions until impact, using the moment equations, would consume a great deal of time for such a case. Hence, specifying CDRØP places a restraint on the computational time.

Other controls on calculation time are possible by specifying TSTØP, the maximum permitted trajectory time, or by specifying ZSTØP as the altitude at which the trajectory calculation must be stopped.

Use of the linearized dynamics solution below peak dynamic pressure, when appropriate, also can save considerable time.

4. Amount of Output

The output is limited to 150 lines, which can be regulated by program controls on the interval of printout. The printout interval controls include successive output points in integrated stagnation point heating, altitude, and velocity.

TABLE I

MARS MODEL ATMOSPHERES

Inputs		JPL					NASA		
Program Name	Units	G	H	I	J	K	1	2	3
RSL	ft	11.E6	11.E6	11.E6	11.E6	11.E6	11.E6	11.E6	11.E6
GSL	ft/sec^2	12.3	12.3	12.3	12.3	12.3	12.3	12.3	12
RHØSL	$slug/ft^3$	4.21E-5	4.21E-5	5.9E-5	1.042E-4	9.54E-5	8.97E-5	6.94E-5	4.19 E-5
TSL	°K	260	260	230	210	230	300	250	200
TST	°K	130	230	180	130	230	260	180	100
PTH	lb/ft^2	1.E-20	1.E-20	1.E-20	1.E-20	1.E-20	6.636E-2	1.454E-3	4.939-E9
FALR*	-	0.935	0.935	0.952	0.982	0	0.987	1.032	1.053
LTH	°K/ft	1.E-20	1.E-20	1.E-20	1.E-20	1.E-20	6.096E-4	6.096E-4	6.096E-4
XN	-	0.001	0.001	0.245	0.765	0.765	0.951	0.892	0.512
XØ	-	0	0	0	0	0	0	0	0
XC	-	0.647	0.647	0.433	0.105	0.105	0.049	0.108	0.488
XA	-	0.352	0.352	0.322	0.13	0.13	0	0	0

*Note Values of FALR have been adjusted to account for the difference between the C_P specified for the atmosphere model and the C_P computed in the program to provide the intended temperature variation (see Equations (3) and (6).

39A

5. Vehicle Data

a. Mass and diameter are the key inputs which affect the trajectory, coefficient calculation, heating, and scaling.

b. The radii of gyration and center of gravity, which affect the dynamics, are input as fractions of the diameter to simplify scaling. If these ratios can be assumed independent of size, only the mass and diameter need be respecified when the vehicle size is changed.

6. Aerodynamic Coefficients

a. Coefficients which are functions of angle of attack are specified only from 0 to 180 degrees, corresponding to the angles of attack listed in TABAL (up to 19 values). The program computes values of coefficients between 180 and 360 degrees.

b. When MANDAL table is specified, tables of all coefficients based on TABAL must be specified for each Mach number in MANDAL (maximum 5 values). At Mach numbers smaller (or larger) than those listed in MANDAL, the program uses coefficients corresponding to the smallest (or largest) Mach number specified.

c. An option is provided to input CMFA in place of XCPFA. To use this option, CMIN is set = 1.0 and specify CMCØD. With either CMFA or XCPFA input, the program computes the correct pitching moment for the input center-of-gravity location XCGØD.

d. For constant coefficients (invariant with Mach number) MANDAL is set = 0, in which case the program uses the first table of coefficients (lowest Mach number).

e. Computation of the dynamic motions can be switched to the linear solution at peak dynamic pressure by specifying ALPCR larger than the angle of attack envelope at that time.

f. Coefficients which are functions of Mach number only are specified for each Mach number listed in MØNLY (maximum 10 values). These are used by the program in the linear equations of motion, and to compute D/W, M/C_DA, and frequency.

g. CMAFM must be specified if printout is desired in the FREQ column.

h. CDFM must always be specified (will switch to CDRØP at peak dynamic pressure otherwise).

7. Entry Conditions

a. ZE, VE, and GAME must always be specified.

b. As the integration interval is determined by accuracy limits, large angular rates may lead to excessive computational time. To prevent usage of excessive computer time, a stop exists in the program, whereby a requirement for an integrating interval less than a prescribed value stops the calculations and a message is printed out DELTAT TOO SMALL. A possible source of this problem are inputs which create very large angular rates.

8. Particle Trajectories

Trajectories which do not allow for any effects of angle of attack can be computed by using the MANDAL coefficient table and specifying ALPHAE = 0.0 and ALPCR = 0.0.

The MANDAL table must have data at $\alpha = 0$ and for at least one other non-zero angle of attack. Tabular input for CDFM is required if M/CDA and D/W printout is desired.

9. Heating Data

a. Velocity gradient (VGFDR) and shock standoff distance (DELØRC) at the stagnation point are input (wind tunnel data or theory) as functions of the stagnation point density ratio (TABDR). Figures 7 and 8 obtained from Vinokur's[9] results show how these parameters vary theoretically with nose shape; comparison with the methods of References 10 and 11 are also shown. Correlation of Vinokur's[9] results with those of Traugott[12] and Kaattari[10] is shown in Figure 9, wherein all of Vinokur's[9] results are seen to compress into a single correlation curve at low density ratios (which agrees with Kaattari's[10] recommended correlation).

b. The stagnation point quantities VGFDR and DELØRC are required to predict the convective and radiative heating. Sufficient information is provided to estimate these quantities using Figures 6 and 7. The suggested use of these curves for vehicles with various nose shapes is depicted in Figure 10.

c. SSØD defines the approximate sonic point for turbulent heating calculation, and is determined by the nose shape of the vehicle.

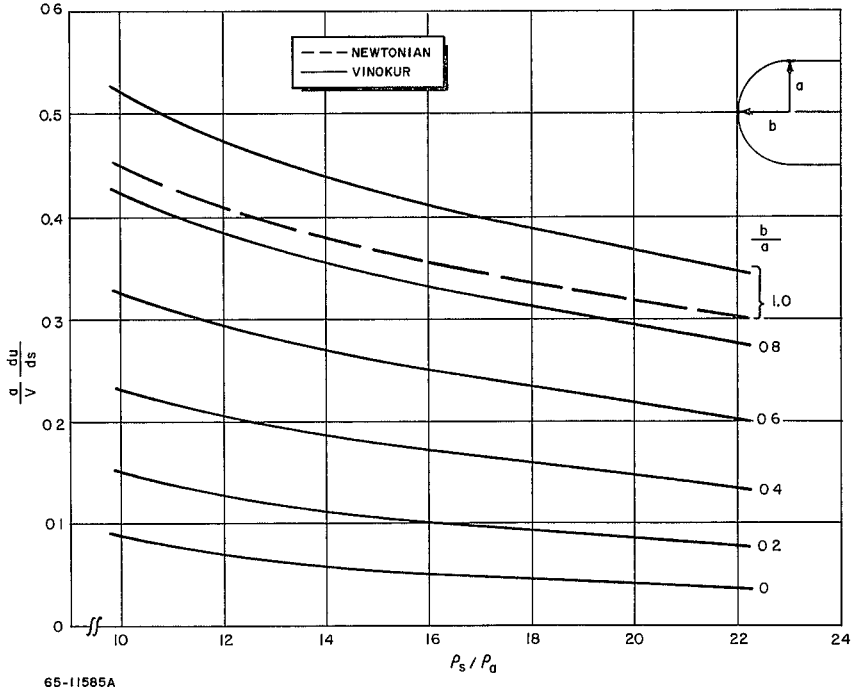

Figure 7 STAGNATION POINT VELOCITY GRADIENT WITH VARYING BLUNTNESS AND DENSITY RATIO

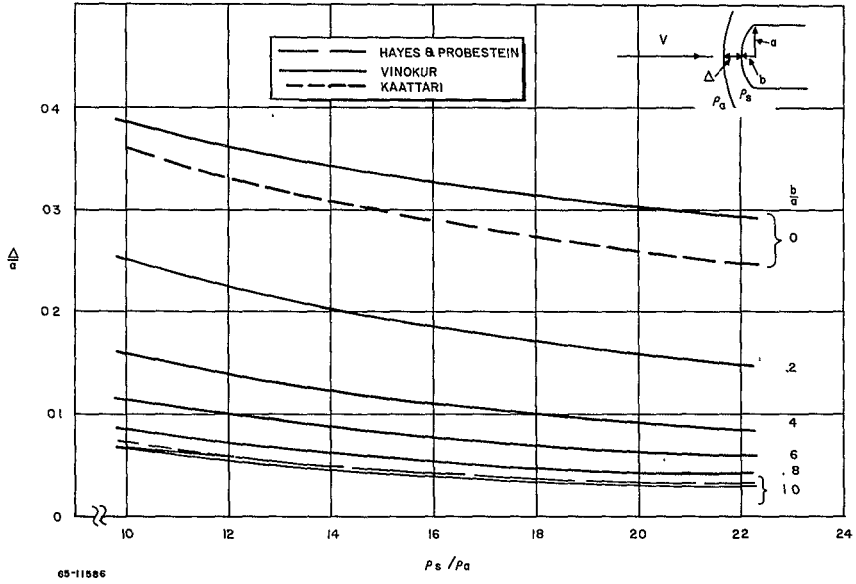

Figure 8 STAGNATION POINT SHOCK STANDOFF DISTANCE WITH VARYING BLUNTNESS AND DENSITY RATIO

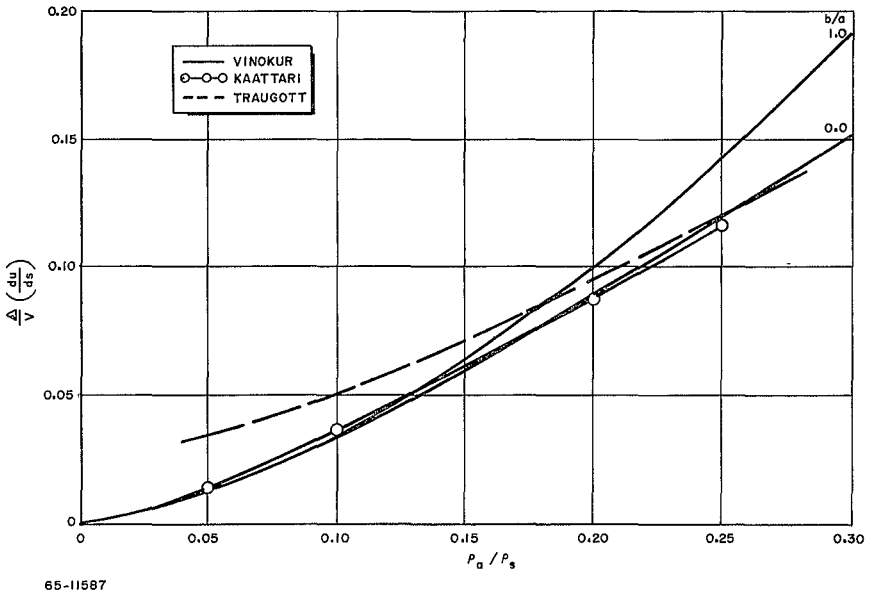

Figure 9 HYPERSONIC CORRELATIONS OF STAGNATION POINT STANDOFF DISTANCE AND VELOCITY GRADIENT

Case 1 Sharp Corner on Spherial Cap.
Define θ^* as sonic point flow angle,

$$\theta^* = \sin^{-1}\left(\frac{2}{\gamma+1}\right)^{\frac{\gamma}{2(\gamma-1)}}$$

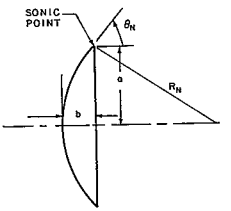

Two possibilities

(a) $\theta_N > \theta^*$

$b = R_N (1 - \sin \theta_N)$

$a = R_N \cos \theta_N$

(b) $\theta_N \leq \theta^*$

$\frac{b}{a} = 1$, $a = R_N$

Case 2 Nose Cap With Two Radii
Three possibilities:

(a) $\theta_N < \theta^*$, $b/a = 1.0$

(b) $\theta_N > \theta^*$, bow wave follows body contour

$b = R_N (1 - \sin \theta_N) + R_{SN} \sin \theta_N)$

$a = R_N \cos \theta_N + R_{SN} (1 - \cos \theta_N)$

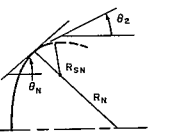

(c) $\theta_N > \theta^*$, bow wave stands off.

For stagnation point velocity gradient,

$b/a = 1$, $a = R_W$

For stand off distance,

$\Delta = \Delta_o - X^*$

R_W and Δ_o for flat nosed cylinder of radius y^*

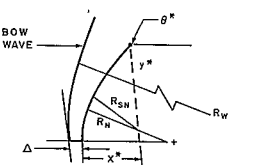

Figure 10 METHODS FOR ESTIMATING VGFDR AND DEL/RC FOR VARIOUS NOSE SHAPES

d. REYT specifies the Reynolds number (based on S*) at which transition occurs at the sonic point. The Reynolds number computation is based on the viscosity-temperature dependency of Jos[13] for nitrogen and is shown in Figure 11.

e. IRNE and KNE are nonequilibrium radiation heating parameters, preset at typical air values.[14] Additional data for N_2-CO_2 mixtures is given in Reference 5.

f. DIRNE specifies the nonequilibrium radiation intensity as a tabular function of the velocity (VIRNE). When DIRNE is used, IRNE must be specified as equal to zero.

10. Tabular Inputs of Coefficients

Since much of the input data for Program 1880 consists of one- and two-dimensional tables, time and effort can be saved by understanding the following facts.

All independent variable tables must be specified in monotonic ascending order.

The total range of the variable of interest should be covered by the independent variable table. If the variable is smaller than the first entry of the array, then the table lookup is done by a linear extrapolation. If the independent variable is greater than or equal to the last entry in the array, then either an incorrect answer, a loop, or an unexpected stop is the result. The only exception to this in Program 1880 is in the calculation of coefficients of a function of angle of attack, since for angles between 180 and 360 degrees the coefficient is computed by a change of variable and a simple transformation of the coefficient in the range between 0 and 180. Hence the independent variable table TABAL need be specified only to the value 180.

Constant functions must be described for the table lookup by at least two different values of the independent variable.

The only (optional) exception to the above rule, applied to tables of coefficients as a function of angle of attack and Mach number, and in the special case where there is no Mach number dependence for the coefficient, is described below.

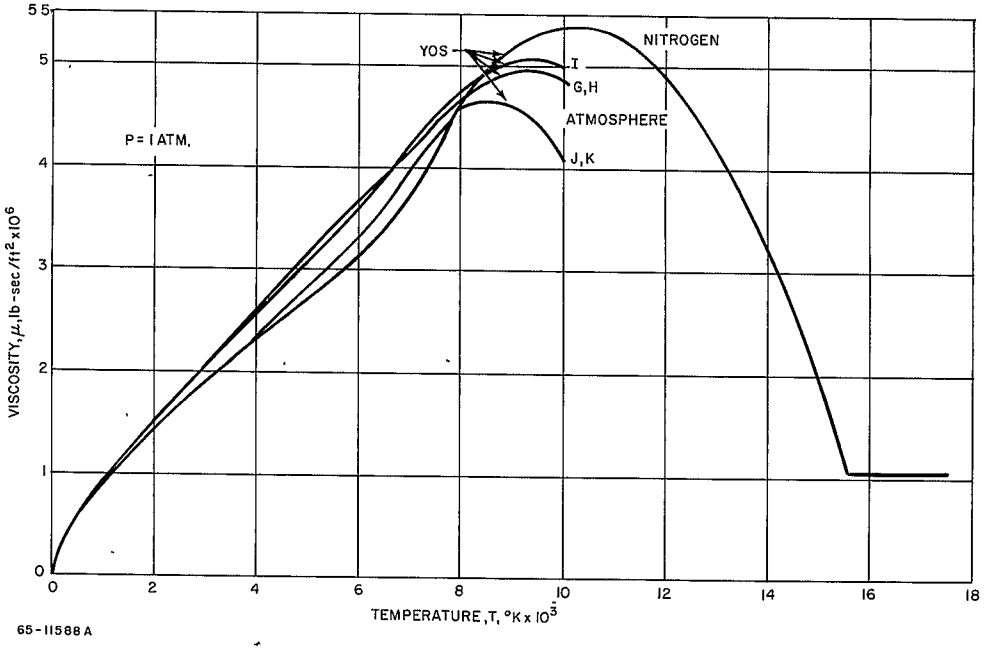

Figure 11 VISCOSITY-TEMPERATURE MODEL

The tables of aerodynamic coefficients have as independent variable tables TABAL for angle-of-attack dependence and MANDAL for Mach-number dependence. The coefficient tables are matrices of maximum size 19 rows and 5 columns (or 19 angles of attack and 5 Mach numbers). The program has assumed that for Mach numbers less than the first (smallest) Mach number in the array MANDAL, the coefficient is equal to its value at the angle of attack and the smallest Mach number in MANDAL. Similarly, for Mach numbers greater than the largest entry in MANDAL, the coefficient is assumed to have the value of the angle of attack and the largest Mach number in the array MANDAL. Thus the Mach number dependence of the coefficient is treated as piece-meal constant off the ends of the table.

The coefficient matrices may be regarded as of the form a_{ij}, where i references the angle-of-attack value and j the Mach number. The coefficient is specified on a punched card as, for example,

CNFA (1, 1) = 1., 2., 3., 4., CNFA (1, 2) = 4., 3., 2., 1.

The double subscript specifies that the array is two-dimensional and that the left-most index varies the most rapidly. Hence, given a starting location such as CNFA (1, 1), the program loads information into successive storage locations (columnwise, in matrix notation), until a new starting location is specified. Since the maximum dimensions of the array are referenced for loading, here (19, 5), the above example could not be rewritten as

CNFA (1, 1) = 1., 2., 3., 4., 4., 3., 2., 1.

All columns of the matrix do not have to be filled, but there must be a one-to-one correspondence between columns and entries in MANDAL.

It was stated above that for constant functions at least two different values of the independent variable must be specified with the corresponding (equal) values of the dependent variable. The single exception to this rule in Program 1880 is for aerodynamic coefficients which are dependent on angle of attack and independent of Mach number. For this case, two different values of Mach number may be specified, and the first two columns of the coefficient matrix made identical ($a_{I,1} = a_{I,2}$, I = 1, 2 ..., 19). However, the same effect may be achieved by making all entries of MANDAL = 0 and specifying only the first column of the coefficient matrix. This latter may be done either by the CNFA (1, 1) a_{11}, $a_{2,1}$, a_{31}, ...

C. OUTPUT DEFINITIONS

External Name	Internal Name	Symbol	Parameter	Units
ALBAR	ALENV	$\bar{a}$	Total angle of attack envelope (max. envelope, interpolated linearly between peak amplitudes).	degrees
ATM	ATMØS	--	Atmosphere identification.	---
CASE	CAS	--	Case identification.	---
D	D	d	Diameter of vehicle (reference length).	feet
DATE	DATE		Date identification.	---
D/W	XØW	D/W	Zero angle-of-attack deceleration.	Earth g
DYN-PR	QDY	Q	Dynamic pressure.	lb/ft^2
FREQ	FRNAT	f	Natural undamped frequency of the vehicle based on CMAFM input.	cps
GAMMA	GAM	γ	Local flight path angle.	degrees
HD/HS	HDHS	H_D/H_S	Ratio of dissociation enthalpy to total gas enthalpy.	---
HMRTØ	HRT	HM/RT_O	Stagnation enthalpy.	---
IX	ZIX	I_X	Moment of inertia about roll axis.	$slug/ft^2$
IY	ZIY	I_Y	Moment of inertia about pitch and yaw axes.	$slub/ft^2$
MACH	XMCH	M	Flight Mach number.	---
M/CDA	EMØCDA	m/C_DA	Ballistic coefficient.	$slug/ft^2$
MEMØ	MEMØ		Memo identification.	---

External Name	Internal Name	Symbol	Parameter	Units
N/W	ENØW	N/W	Normal acceleration at angle-of-attack value.	Earth g
PE	PI	P_e	Spin rate at entry.	rad/sec
QE	QI	Q_e	Pitch rate at entry.	rad/sec
QI	QI*	q_i^*	Radiative heating contribution of each specie.	Btu/ft^2-sec
QR	QSUM	q_R	Same as QRE (below).	
QRE	QR	q_E	Zero angle-of-attack equilibrium radiation heating rate at the stagnation point.	Btu/ft^2-sec
QRNE	QRNE	q_{RAD}	Corrected value of QRE accounting for nonequilibrium effects.	Btu/ft^2-sec
QS	QS	q_S	Zero angle-of-attack stagnation point convective heating rate.	Btu/ft^2-sec
QSTAR	QT	q^*	Zero angle-of-attack convective heating rate at the sonic point (laminar before transition, turbulent after transition).	Btu/ft^2-sec
RE	RI	R_e	Yaw rate at entry.	rad/sec
REY	RTX	--	Free stream Reynold's number based on vehicle diameter.	---
RHØA	RØ	ρ_a	Ambient density.	slug/ft^3
RHØS/RHØ	RHØST	ρ_s/ρ_a	Normal shock density ratio at stagnation point.	---
TIME	TIME	t	Flight time measured from entry.	seconds
TS	T	T_S	Stagnation temperature.	°K
V	V		Flight velocity.	ft/sec

External Name	Internal Name	Symbol	Parameter	Units
VEHICL	VEHICL		Case identification	---
X	X	X	Specie Concentration	moles
XCG/D	XCGØD	X_{CG}/D	Center-of-gravity location as a fraction of vehicle diameter	---
Z	Z	Z	Altitude	feet
ZS	Z		Compressibility factor; number moles per initial mole cold gas	---
ZST	ZST	Z_{ST}	Altitude of the base of the stratosphere	feet
ZTH	ZTH	Z_{TH}	Altitude at the base of the thermosphere	feet

D. SAMPLE PROBLEM

1. Statement of Problem -- Determine the angle-of-attack envelope and heating history for a Mars entry of a blunt cone configuration. The vehicle parameters entry conditions, atmosphere, and planet data are to be prescribed as input. An orbital entry was chosen, for which the entry velocity is low.

Two trajectories were computed to provide both the heating and load data, for a typical entry to Mars following the orbit.

2. Computer Input Forms -- The computer input forms for the two sample cases containing all the necessary input data to be keypunched are shown on the following pages. All of the input on these forms are written with decimals, and everything shown on the forms are keypunched. Unused copies of the input forms are provided on pages in this report, from which the program user can make copies and use for further cases.

3. Output -- The output lists the cards read in and should be checked to ensure that the data have been keypunched correctly. The trajectory output format lists key data across the top of the page. The output of the two cases are given on pages following the input pages.

The trajectory of Case 1 indicates a peak deceleration of 25.8 g (Earth g), negligible radiation, an impact time of 301.28 seconds, and a subsonic impact. The time of transition was 189.97 seconds at which time the free stream Reynold's number was 2.1E+06, occurring at peak laminar heating. The data requested at Mach 1.2 are given at the end of the output as well as integrals of the heat pulses.

The trajectory for Case 2, which has the smaller entry angle and is the heat shield design trajectory, has a peak deceleration of 6.7 g and an impact time of 473 seconds. Transition did not occur on this trajectory. Additional messages are printed out for this case indicating (no valid solutions in zones) which refers to points along the trajectory where no solutions were obtained for the equilibrium gas composition. The reason for this occurrence is because of the nature of the approximate solution and requirements that the solution, in order to be valid, satisfy physical criteria.

E. DIAGNOSTICS

A number of messages are given in the printout reflecting the following program diagnostics.

1. NØ WØBBLES

The angle of attack did not oscillate, and the envelope value ALBAR is equal to the current angle of atack.

2. DELTAT TØØ SMALL

The integration interval required decreased to less than the input (preset) minimum allowable value.

3. NØ VALID SØLUTIØN

The equilibrium gas dynamics (1883) solution was not able to obtain a solution with positive concentrations for all the species satisfying the elemental and charge conservation relationships. In this case the data is linearly interpolated between the last and the next point for which a solution is found.

4. NØT CØNVERGED IN 30 ITERATIØNS

The equilibrium gas dynamics (1883) solution was unable to converge within 30 iterations to within 1 percent on the enthalpy; use the last value found.

RAD 2 0963
5 63

DIGITAL COMPUTER INPUT REQUEST FORM	PROBLEM NO 1880	PROGRAMMER D. Gillespie
	TITLE Trajectory Dynamics Program	

MEMO NO	SECTION NO	WORK ORDER NO	(E240 USE ONLY)	REQUESTED BY	EXT	EST TIME	PAGE 1 OF 6 PAGES

$ INPUT

DATE= _____, MEMØ= _____, CASE= _____, ATMØS= _____, VEHICL= _____

ALAM	=	_____,	IRNE	=	_____,	TSL	=	_____,
ALPCR	=	_____,	KNE	=	_____,	TST	=	_____,
ALPHAE	=	_____,	LS	=	_____,	TSTØP	=	_____,
AR	=	_____,	LTH	=	_____,	TZERØ	=	_____,
ATRB	=	_____,	MASS	=	_____,	UPDN	=	_____,
BLAM	=	_____,	MVE	=	_____,	VE	=	_____,
BTRB	=	_____,	NPTST	=	_____,	VSTØPQ	=	_____,
CDRØP	=	_____,	PE	=	_____,	VTST	=	_____,
CMCØD	=	_____,	PTH	=	_____,	XA	=	_____,
CMIN	=	_____,	PTMAC	=	_____,	XC	=	_____,
D	=	_____,	QDYPT	=	_____,	XCGØD	=	_____,
DELMAC	=	_____,	QE	=	_____,	XKT	=	_____,
DELMT	=	_____,	QTST	=	_____,	XN	=	_____,
DELTAT	=	_____,	RE	=	_____,	XØ	=	_____,
FALR	=	_____,	REYT	=	_____,	XPRIN	=	_____,
GAME	=	_____,	RGX	=	_____,	ZCGØD	=	_____,
GSL	=	_____,	RGY	=	_____,	ZE	=	_____,
GTST	=	_____,	RHØSL	=	_____,	ZSTØP	=	_____,
IPHEAT	=	_____,	RSL	=	_____,	ZTST	=	_____,
IPRINT	=	_____,	SSØD	=	_____,			
IPRQRD	=	_____,	THF	=	_____,			

MANDAL = _____, _____, _____, _____, _____,

CDFM = _____, _____, _____, _____, _____,

_____, _____, _____, _____, _____,

CLAFM = _____, _____, _____, _____, _____,

_____, _____, _____, _____, _____,

CMAFM = _____, _____, _____, _____, _____,
_____, _____, _____, _____, _____,

CMQFM = _____, _____, _____, _____, _____,
_____, _____, _____, _____, _____,

DELØRC = _____, _____, _____, _____, _____,
_____, _____, _____, _____, _____,

DIRNE = _____, _____, _____, _____, _____,
_____, _____, _____, _____, _____,

DNBND = _____, _____, _____, _____, _____,
_____, _____, _____,

MØNLY = _____, _____, _____, _____, _____,
_____, _____, _____, _____, _____,

TABDR = _____, _____, _____, _____, _____,
_____, _____, _____, _____, _____,

UPBND = _____, _____, _____, _____, _____,
_____, _____, _____,

VGFDR = _____, _____, _____, _____, _____,
_____, _____, _____, _____, _____,

VIRNE = _____, _____, _____, _____, _____,
_____, _____, _____, _____, _____,

CMFA (1, 1)= _____, _____, _____, _____, _____,
_____, _____, _____, _____, _____,
_____, _____, _____, _____, _____,
_____, _____, _____, _____,

CMFA(1, 2) = _____, _____, _____, _____, _____,
_____, _____, _____, _____, _____,
_____, _____, _____, _____, _____,
_____, _____, _____, _____,

CMFA(1, 3) = _____, _____, _____, _____, _____,
_____, _____, _____, _____, _____,
_____, _____, _____, _____, _____,
_____, _____, _____, _____,

CMFA(1, 4) = _____, _____, _____, _____, _____,
_____, _____, _____, _____, _____,
_____, _____, _____, _____, _____,
_____, _____, _____, _____,

CMFA(1, 5) = _____, _____, _____, _____, _____,
_____, _____, _____, _____, _____,
_____, _____, _____, _____, _____,
_____, _____, _____, _____,

CMQFA(1, 1) = _____, _____, _____, _____, _____,
_____, _____, _____, _____, _____,
_____, _____, _____, _____, _____,
_____, _____, _____, _____,

CMQFA(1, 2) = _____, _____, _____, _____, _____,
_____, _____, _____, _____, _____,
_____, _____, _____, _____, _____,
_____, _____, _____, _____,

CMQFA(1, 3) = _____, _____, _____, _____, _____,
_____, _____, _____, _____, _____,
_____, _____, _____, _____, _____,
_____, _____, _____, _____,

CMQFA(1, 4) = _____, _____, _____, _____, _____,
_____, _____, _____, _____, _____,
_____, _____, _____, _____, _____,
_____, _____, _____, _____,

CMQFA(1, 5) = _____, _____, _____, _____, _____,
_____, _____, _____, _____, _____,
_____, _____, _____, _____, _____,
_____, _____, _____, _____,

CNFA (1, 1) = _____, _____, _____, _____, _____,
_____, _____, _____, _____, _____,
_____, _____, _____, _____, _____,
_____, _____, _____, _____,

CNFA (1, 2) = _____, _____, _____, _____, _____,
_____, _____, _____, _____, _____,
_____, _____, _____, _____, _____,
_____, _____, _____, _____,

CNFA (1, 3) = _____, _____, _____, _____, _____,
_____, _____, _____, _____, _____,
_____, _____, _____, _____, _____,
_____, _____, _____, _____,

CNFA (1, 4) = _____, _____, _____, _____, _____,
_____, _____, _____, _____, _____,
_____, _____, _____, _____, _____,
_____, _____, _____, _____,

CNFA (1, 5) = _____, _____, _____, _____, _____,
_____, _____, _____, _____, _____,
_____, _____, _____, _____, _____,
_____, _____, _____, _____,

CXFA (1, 1) = _____, _____, _____, _____, _____,
_____, _____, _____, _____, _____,
_____, _____, _____, _____, _____,
_____, _____, _____, _____,

CXFA (1, 2) = _____, _____, _____, _____, _____,
_____, _____, _____, _____, _____,
_____, _____, _____, _____, _____,
_____, _____, _____, _____,

CXFA (1, 3) = _____, _____, _____, _____, _____,
_____, _____, _____, _____, _____,
_____, _____, _____, _____, _____,
_____, _____, _____, _____,

CXFA (1, 4) = _____, _____, _____, _____, _____,
_____, _____, _____, _____, _____,
_____, _____, _____, _____, _____,
_____, _____, _____, _____,

CXFA (1, 5) = _____, _____, _____, _____, _____,
_____, _____, _____, _____, _____,
_____, _____, _____, _____, _____,
_____, _____, _____, _____,

XCPFA (1, 1) = _____, _____, _____, _____, _____,
_____, _____, _____, _____, _____,
_____, _____, _____, _____, _____,
_____, _____, _____, _____,

XCPFA (1, 2) = _____, _____, _____, _____, _____,
_____, _____, _____, _____, _____,
_____, _____, _____, _____, _____,
_____, _____, _____, _____,

RAD 2 0964
5-63

DIGITAL COMPUTER INPUT REQUEST FORM	PROBLEM NO	MEMO NO	SECTION NO	CONTINUATION SHEET
	1880			PAGE 6 OF 6 PAGES

XCPFA (1, 3)= _____, _____, _____, _____, _____,
_____, _____, _____, _____, _____,
_____, _____, _____, _____, _____,.
_____, _____, _____, _____,

XCPFA(1, 4)= _____, _____, _____, _____, _____,
_____, _____, _____, _____, _____,
_____, _____, _____, _____, _____,
_____, _____, _____, _____,

XCPFA(1, 5)= _____, _____, _____, _____, _____,
_____, _____, _____, _____, _____,
_____, _____, _____, _____, _____,
_____, _____, _____, _____,

TABAL = _____, _____, _____, _____, _____,
_____, _____, _____, _____, _____,
_____, _____, _____, _____, _____,
_____, _____, _____, _____,

$

RAD 2-0863 5 63

DIGITAL COMPUTER INPUT REQUEST FORM	PROBLEM NO 1880	PROGRAMMER D. Gillespie
	TITLE: TRAJECTORY DYNAMICS PROGRAM	

MEMO NO	SECTION NO	WORK ORDER NO	(E240 USE ONLY)	REQUESTED BY	EXT	EST TIME	
PL-167	K420	W305-050-0005		P. Levine	2996		PAGE 1 OF 6 PAGES

$INPUT

DATE = 5.11 , MEMØ= 167. , CASE = 1. , ATMØS= 3.8 , VEHICL= 60. ,

ALAM	=		IRNE	=		TSL	=	200.0 ,
ALPCR	=		KNE	=		TST	=	100.0 ,
ALPHAE	=	142.3 ,	LS	=		TSTØP	=	
AR	=		LTH	=	1.0E-20 ,	TZERØ	=	
ATRB	=		MASS	=	57.6 ,	UPDN	=	
BLAM	=		MVE	=	1.0 ,	VE	=	15,200.0 ,
BTRB	=		NPTST	=		VSTØPQ	=	
CDRØP	=	0.0 ,	PE	=	1.045 ,	VTST	=	
CMCØD	=	0.27 ,	PTH	=	1.3843E-11,	XA	=	0.0 ,
CMIN	=	1.0 ,	PTMAC	=	1.2 ,	XC	=	0.999 ,
D	=	15.0 ,	QDYPT	=		XCGØD	=	0.25 ,
DELMAC	=		QE	=	0.0 ,	XKT	=	
DELMT	=		QSTST	=		XN	=	0.001 ,
DELTAT	=		RE	=	1.77 ,	XØ	=	0.0 ,
FALR	=	1.11367 ,	REYT	=		XPRIN	=	
GAME	=	17.5 ,	RGX	=	0.30 ,	Z	=	
GSL	=	12.3 ,	RGY	=	0.22 ,	ZE	=	8.0E5 ,
GTST	=		RHØSL	=	2.56E-5 ,	ZSTØP	=	
IPHEAT	=		RSL	=	11.1089E6,	ZTST	=	
IPRINT	=		SSØD	=	0.57 ,			
IPRQRD	=		THF	=				

MANDAL = 0.5 , 1.5 , 3.0 , 9.0 , 19.0 ,

CDFM = 1.0 , 1.0 , 1.52 , 1.55 , 1.59 ,
1.63 , 1.63 , , , ,

CLAFM = -0.675 , -0.675 , -1.231 , -1.227 , -1.163 ,
-1.212 , -1.212 , , , ,

RE-ORDER No. 66-417

CMAFM = -0.183, -0.183, -0.12, -0.115, -0.138,
-0.138, -0.138, , , ,

CMØFM = -0.392, -0.392, -0.392, -0.392, -0.392,
-0.392, -0.392, , , ,

DELØRC = 0.0192, 0.0104, 0.0054, , ,
, , , , ,

DIRNE = , , , , ,
, , , , ,

DNBND = , , , , ,
, , , , ,

MØNLY = 0.0, 0.5, 1.5, 3.0, 9.0,
19.0, 100., , , ,

TABDR = 6.25, 12.5, 25.0, , ,
, , , , ,

UPBND = , , , , ,
, , , , ,

VGFDR = 3.90, 2.70, 1.80, , ,
, , , , ,

VIRNE = , , , , ,
, , , , ,

CMFA (1, 1)= 0.0, -0.032, -0.062, -0.083, -0.095,
-0.095, -0.084, -0.064, -0.043, -0.024,
-0.010, -0.002, -0.0003, -0.0003, -0.0002,
-0.0002, -0.0001, -0.0001, -0.0,

61

RAD 2 0964 5-63

DIGITAL COMPUTER INPUT REQUEST FORM	PROBLEM NO 1880	MEMO NO	SECTION NO	CONTINUATION SHEET PAGE 3 OF 6 PAGES

CMFA(1, 2)= 0.0 , -0.021 , -0.040 , -0.053 , -0.057 ,
-0.-57 , -0.050 , -0.038 , -0.026 , -0.0140 ,
-0.006 , -0.001 , -0.0002 , -0.0002 , -0.0001 ,
-0.0001 , -0.0001 , -0.0001 , -0.0 ,

CMFA(1, 3)= 0.0 , -0.020 , -0.040 , -0.053 , -0.057 ,
-0.057 , -0.050 , -0.038 , -0.026 , -0.014 ,
-0.006 , -0.001 , -0.0002 , -0.0002 , -0.0001 ,
-0.0001 , -0.0001 , -0.0001 , -0.0 ,

CMFA(1, 4)= 0.0 , -0.024 , -0.058 , -0.077 , -0.089 ,
-0.089 , -0.079 , -0.060 , -0.041 , -0.022 ,
-0.009 , -0.002 , -0.0003 , -0.0003 , -0.0002 ,
-0.0002 , -0.0001 , -0.0001 , -0.0 ,

CMFA(1, 5)= 0.0 , -0.024 , -0.058 , -0.077 , -0.089 ,
-0.089 , -0.079 , -0.060 , -0.041 , -0.022 ,
-0.009 , -0.002 , -0.0003 , -0.0003 , -0.0002 ,
-0.0002 , -0.0001 , -0.0001 , -0.0 ,

CMQFA(1, 1)= -0.392 , -0.386 , -0.369 , -0.340 , -0.301 ,
-0.253 , -0.197 , -0.161 , -0.131 , -0.102 ,
-0.150 , -0.200 , -0.254 , -0.326 , -0.387 ,
-0.437 , -0.474 , -0.497 , -0.505 ,

CMQFA(1, 2)= -0.392 , -0.386 , -0.369 , -0.340 , -0.301 ,
-0.253 , -0.197 , -0.161 , -0.131 , -0.102 ,
-0.150 , -0.200 , -0.254 , -0.326 , -0.387 ,
-0.437 , -0.474 , -0.497 , -0.505 ,

CMQFA(1, 3)= -0.392 , -0.386 , -0.369 , -0.340 , -0.301 ,
-0.253 , -0.197 , -0.161 , -0.131 , -0.102 ,
-0.150 , -0.200 , -0.254 , -0.326 , -0.387 ,
-0.437 , -0.474 , -0.497 , -0.505 ,

RE-ORDER No. 66-4-17

RAD 2-0984 6-63

DIGITAL COMPUTER INPUT REQUEST FORM	PROBLEM NO. 1880	MEMO NO	SECTION NO	CONTINUATION SHEET PAGE 4 OF 6 PAGES

CMQFA (1, 4)= -0.392 , -0.386 , -0.369 , -0.340 , -0.301 ,
-0.253 , -0.197 , -0.161 , -0.131 , -0.102 ,
-0.150 , -0.200 , -0.254 , -0.326 , -0.387 ,
-0.437 , -0.474 , -0.497 , -0.505 ,

CMQFA (1, 5)= -0.392 , -0.386 , -0.369 , -0.340 , -0.301 ,
-0.253 , -0.197 , -0.161 , -0.131 , -0.1020 ,
-0.150 , -0.200 , -0.254 , -0.326 , -0.387 ,
-0.437 , -0.474 , -0.497 , -0.505 ,

CNFA (1, 1)= 0.0 , 0.053 , 0.114 , 0.155 , 0.177 ,
0.181 , 0.167 , 0.139 , 0.108 , 0.081 ,
0.062 , 0.052 , 0.050 , 0.048 , 0.043 ,
0.036 , 0.026 , 0.014 , 0.0 ,

CNFA (1, 2)= 0.0 , 0.041 , 0.080 , 0.107 , 0.122 ,
0.124 , 0.115 , 0.096 , 0.074 , 0.051 ,
0.043 , 0.036 , 0.034 , 0.033 , 0.030 ,
0.025 , 0.018 , 0.009 , 0.0 ,

CNFA (1, 3)= 0.0 , 0.040 , 0.100 , 0.133 , 0.152 ,
0.155 , 0.143 , 0.119 , 0.093 , 0.069 ,
0.053 , 0.045 , 0.043 , 0.041 , 0.037 ,
0.031 , 0.022 , 0.012 , 0.0 ,

CNFA (1, 4)= 0.0 , 0.060 , 0.130 , 0.174 , 0.198 ,
0.204 , 0.188 , 0.156 , 0.121 , 0.091 ,
0.070 , 0.058 , 0.056 , 0.054 , 0.048 ,
0.041 , 0.029 , 0.016 , 0.0 ,

CNFA (1, 5)= 0.0 , 0.060 , 0.130 , 0.174 , 0.198 ,
0.204 , 0.188 , 0.156 , 0.121 , 0.091 ,
0.070 , 0.058 , 0.056 , 0.054 , 0.048 ,
0.041 , 0.029 , 0.016 , 0.0 ,

RE-ORDER No. 66-411

RAD 2-0964 8-63

DIGITAL COMPUTER INPUT REQUEST FORM	PROBLEM NO 1880	MEMO NO	SECTION NO	CONTINUATION SHEET PAGE 5 OF 6 PAGES

CXFA (1, 1)= 1.0, 0.98, 0.93, 0.82, 0.67,
0.53, 0.39, 0.27, 0.16, 0.07,
-0.04, -0.18, -0.34, -0.52, -0.69,
-0.85, -0.98, -1.04, -1.06,

CXFA (1, 2)= 1.52, 1.47, 1.37, 1.23, 1.07,
0.78, 0.56, 0.38, 0.22, 0.11,
0.02, -0.21, -0.44, -0.72, -1.0,
-1.24, -1.45, -1.55, -1.57,

CXFA (1, 3)= 1.55, 1.46, 1.33, 1.17, 1.00,
0.76, 0.54, 0.36, 0.2, 0.09,
-0.04, -0.23, -0.46, -0.74, -1.02,
-1.26, -1.47, -1.58, -1.60,

CXFA (1, 4)= 1.59, 1.51, 1.3, 1.12, 0.94,
0.74, 0.52, 0.34, 0.17, 0.06,
-0.07, -0.26, -0.49, -0.78, -1.06,
-1.3, -1.51, -1.62, -1.64,

CXFA (1, 5)= 1.63, 1.56, 1.34, 1.15, 0.97,
0.76, 0.57, 0.38, 0.2, 0.08,
-0.06, -0.25, -0.47, -0.77, -1.05,
-1.3, -1.52, -1.67, -1.69,

XCPFA (1, 1)= , , , , ,
, , , , ,
, , , , ,
, , , , ,

XCPFA (1, 2)= , , , , ,
, , , , ,
, , , , ,
, , , ,

XCPFA (1, 3) = _____, _____, _____, _____, _____,
_____, _____, _____, _____, _____,
_____, _____, _____, _____, _____,
_____, _____, _____, _____,

XCPFA (1, 4) = _____, _____, _____, _____, _____,
_____, _____, _____, _____, _____,
_____, _____, _____, _____, _____,
_____, _____, _____, _____,

XCPFA (1, 5) = _____, _____, _____, _____, _____,
_____, _____, _____, _____, _____,
_____, _____, _____, _____, _____,
_____, _____, _____, _____,

TABAL = 0., 10., 20., 30., 40.,
50., 60., 70., 80., 90.,
100., 110., 120., 130., 140.,
150., 160., 170., 180., _____,

$

RAD 2-0963
5 63

DIGITAL COMPUTER INPUT REQUEST FORM	PROBLEM NO 1880	PROGRAMMER D. Gillespie
	TITLE Trajectory Dynamics Program	

MEMO NO	SECTION NO	WORK ORDER NO	(E240 USE ONLY)	REQUESTED BY	EXT	EST TIME	
PL-167	K420	W305-050-0005		P. Levine	2996		PAGE 1 OF 6 PAGES

$INPUT

DATE= 5.11 MEMØ= 167., CASE= 2., ATMØS= 3.8, VEHICL= 60.,

ALAM	=		IRNE	=		TSL	=	275.0,
ALPCR	=		KNE	=		TST	=	200.0,
ALPHAE	=		LS	=		TSTØP	=	
AR	=		LTH	=		TZERØ	=	
ATRB	=		MASS	=		UPDN	=	
BLAM	=		MVE	=		VE	=	14000.0,
BTRB	=		NPTST	=		VSTØPQ	=	
CDROP	=		PE	=		VTST	=	
CMCOD	=		PTH	=	.525E-3,	XA	=	
CMIN	=		PTMAC	=		XC	=	0.2,
D	=		QDYPT	=		XCGØD	=	
DELMAC	=		QE	=		XKT	=	
DELMT	=		QSTST	=		XN	=	0.8,
DELTAT	=		RE	=		XØ	=	
FALR	=	0.994,	REYT	=		XPRIN	=	
GAME	=	-13.,	RGX	=		ZCGØD	=	
GSL	=		RGY	=		ZE	=	
GTST	=		RHØSL	=	0.132E-4,	ZSTØP	=	
IPHEAT	=		RSL	=		ZTST	=	
IPRINT	=		SSØD	=				
IPRQRD	=		THF	=				

```
                    * MEMORY MAP *

SYSTEM                          00000 THRU  02717
FILE BLOCK ORIGIN               02730
FILES     1.    UNIT05
          2.    UNIT06
          3.    UNIT07
FILE LIST ORIGIN                02764
PRE-EXCEPTION INITIALIZATION    02772
CALL ON OBJECT PROGRAM          03033
OBJECT PROGRAM                  03030 THRU  66025

     DECK  ORIGIN      CONTROL SECTIONS   (/NAME/=NON 0 LENGTH, (LOC)=DELETED, *=NOT REFERENCED)

  1. 1880    03030     ///     (73566)    ......  14650 *
  2. SHVST   14671     HVST    20660
  3. SGETK   21676     GETK    22230
  4. SINERP  22370     INTRP   23172
  5. SDERQQ  23967     ///     (73566)    DERQQ   25500
  6. SGETCL  25613     GETCLA  26066
  7. SHEAT   26126     HEAT    26775
  8. SNONEQ  27200     NONEQU  27402
  9. SCKTRB  27472     CKTRB   27612
 10. SGETN   27651     GETN    31555
 11. SGETQ   31620     GETQ    33674
 12. SFINDT  34016     FINDT   34247
 13. SCOOL   34361     COOL    34725
 14. SFINDH  35032     FINDH   35371
 15. SZONES  35506     ZONES   41242
 16. SADAMS  41405     ADAMS4  44550
 17. SARTLU  44710     ARTLU   45235
 18. .LXCON  45415 *   .LXSTR  45416 *   .LXSTP  45421     .LXOUT  45467     .LXRTN  45501     IBEXIT  45501 *
                       .LXCAL  45504 *   .LXERR  45504     .DBCLS  45666 *   .LXARG  46035     .LO     46060 *
                       .CLSE   46066     .LFBL   46067 *   .LUNB   46070     .DFOUT  46071
 19. .INDEF  46075     .DEFIN  46075     .ATTAC  46101 *   .CLOSE  46103     .OPEN   46105     .READ   46107
                       .WRITE  46111     .BSR    46121 *   .READR  46131     .RELSE  46133 *   .LAREA  46144
                       .LFBLK  46162     .LTSX   46165 *   .AREA1  46177     .LUNBL  46205     .ENTRY  46211
                       .GOA    46244     .GO     46250     .DERR   46264     .NOPXI  46265     .COMXI  46267
                       .EX34   46311
 20. .LXSL   46316     .LXSEL  46316     .LXCSEL 46317     .LXFST  46322 *   .LXOVL  46362 *   .LXRGT  46373 *
                       .LXIND  46442 *   .LXDIS  46445 *   .LXFLG  46446 *   .LTCH   46447
 21. .FRTP   46455 *   .FRPT.  46455 *   .FPOUT  46614     .FPARG  46633     /.COUNT/ 46635 *  OVFLOW  46706 *
 22. .ERA5.  46715     E.1     46715     E.2     46716     E.3     46717     E.4     46720
 23. .XGC.   46721     GG.1    46721     GG.2    46722     GG.3    46723     GG.4    46724
 24. XIT     46725     EXIT    46725     .EXIT.  46725 *
 25. .FXFM   46726     .FXEM.  46726     .FXOUT  47263     .FXARG  47271     /.OPTN./ 47345
 26. FOUT    47356     .FOUT.  47356
 27. FCNV    47720     .FCON.  47720     .FCNV.  47743     .ENDFS  47756     .CNVSW  47760     .FOX1   47764
                       .FOX2   47765     .DBC    47767     .DBC8   50110     .DBC9   50113     .DBC10  50120
                       .DBC20  50146     .DDSW   50156     .DDFIX  50165     .FIXSW  50173     .DDBC   50250
                       .DDRS1  50522     .DDRS2  50524     .D1     50527     .D2     50531     .FERR2  50616 *
                       .ANRT   50652     .ONRT   50667     .LNTP   50743     .AOUT   51012     .DFLT   51030
                       .FLT    51164     .DEXPN  51254     .FXO    51255     .HOUT   51405     .INTG   51455
                       .LOUT   51572     .DOUT   51612     .XGF    51643     .TEST   52350     .KOUNT  52353
                       .LIST   52356     .DONE   52367     .OUTBF  52433     .BUF    52461     .QSTO   52462
                       .WIDTH  52463     .GAIN   52464     .GAIN1  52465     .FBUBF  52475     .DDDFL  52520

                                                                                                                  IBLDR                                                                                                                
```

```
$INPUT
 ZTBL =  -0.00000000E-19,  -0.00000000E-19,  -0.00000000E-19,  -0.00000000E-19,  -0.00000000E-19,
         
```

		-0.00000000E-19,	-0.00000000E-19,	-0.00000000E-19,	-0.00000000E-19,	-0.00000000E-19,
		-0.00000000E-19,	-0.00000000E-19,	-0.00000000E-19,	-0.00000000E-19,	-0.00000000E-19,
		-0.00000000E-19,	-0.00000000E-19,	-0.00000000E-19,	-0.00000000E-19,	-0.00000000E-19,
		-0.00000000E-19,	-0.00000000E-19,	-0.00000000E-19,	-0.00000000E-19,	-0.00000000E-19,
		-0.00000000E-19,	-0.00000000E-19,	-0.00000000E-19,	-0.00000000E-19,	-0.00000000E-19,
		-0.00000000E-19,	-0.00000000E-19,	-0.00000000E-19,	-0.00000000E-19,	-0.00000000E-19,
		-0.00000000E-19,	-0.00000000E-19,	-0.00000000E-19,	-0.00000000E-19,	-0.00000000E-19,
		-0.00000000E-19,				
MANDAL	=	0.50000000E 00,	0.15000000E 01,	0.30000000E 01,	0.90000000E 01,	0.19000000E 02,
MONLY	=	0.00000000E-38,	0.50000000E 00,	0.15000000E 01,	0.30000000E 01,	0.90000000E 01,
		0.19000000E-02,	0.10000000E-03,	0.00000000E-19,	0.00000000E-19,	0.00000000E-19,
GDFM	=	0.10300000E 01,	0.10000000E-01,	0.15200000E-01,	0.15500000E-01,	0.15900000E-01,
		0.16300000E 01,	0.16300000E 01,	-0.00000000E-19,	-0.00000000E-19,	-0.00000000E-19,
VE	=	0.15200000E 05,				
GAME	=	-0.17500000E 02,				
ZE	=	0.80000000E 06,				
MASS	=	0.57600000E 02,				
TSTOP	=	0.10000000E 04,				
ZSTOP	=	0.00000000E-38,				
FALR	=	0.11136700E 01,				
LTH	=	0.10000000E-19,				
RSL	=	0.11108900E 08,				
GSL	=	0.12300000E 02,				
XN	=	0.10000000E-02,				
XC	=	0.99900000E 00,				
TSL	=	0.20000000E 03,				
TST	=	0.10000000E 03,				
PTH	=	0.13843000E-10,				
RHOSL	=	0.25600000E-04,				
DELTAT	=	0.10000000E-01,				
UPBND	=	0.10000000F-01,	0.10000000E-04,	0.10000000E 00,	0.10000000E-02,	0.10000000E-02,
		0.10000000E-03,	0.10000000E-03,	0.10000000E-03,		
DNBND	=	0.10000000E-02,	0.10000000E-05,	0.10000000E-01,	0.10000000E-03,	0.10000000E-03,
		0.10000000E-04,	0.10000000E-04,	0.10000000E-04,		
UPDN	=	0.20000000E 00,				
XPRIN	=	0.10000000E 01,				

```
 TZERO =  0.00000000E-38,
 DELMT =  0.10000000E-04,
 AR    =  0.89516000E-05,
 NVE   =  1,
 LS    =  5,
 NPIST =  51,
 PE    =  0.10450000E 01,
 OE    =  0.00000000E-38,
 RE    =  0.17700000E 01,

 CNRA  =  0.00000000E-38,  0.53000000E-01,  0.11400000E 00,  0.15500000E 00,  0.17700000E 00,
          0.18100000E 00,  0.16700000E 00,  0.13900000E 00,  0.10800000E 00,  0.81000000E-01,
          0.62000000E-01,  0.52000000E-01,  0.50000000E-01,  0.48000000E-01,  0.43000000E-01,
          0.36000000E-01,  0.26000000E-01,  0.14000000E-01, -0.00000000E-38,  0.00000000E-38,
          0.41000000E-01,  0.80000000E-01,  0.10700000E 00,  0.12200000E 00,  0.12400000E 00,
          0.11500000E 00,  0.96000000E-01,  0.74000000E-01,  0.51000000E-01,  0.43000000E-01,
          0.36000000E-01,  0.34000000E-01,  0.33000000E-01,  0.30000000E-01,  0.25000000E-01,
          0.18000000E-01,  0.90000000E-02,  0.00000000E-38,  0.00000000E-38,  0.40000000E-01,
          0.10000000E 00, -0.13300000E 00,  0.15200000E 00, -0.15500000E 00,  0.14300000E 00,
          0.11900000E 00,  0.93000000E-01,  0.69000000E-01,  0.53000000E-01,  0.45000000E-01,
          0.43000000E-01,  0.41000000E-01,  0.37000000E-01,  0.31000000E-01,  0.22000000E-01,
          0.12000000E-01,  0.00000000E-38,  0.00000000E-38,  0.60000000E-01,  0.13000000E 00,
          0.17400000E 00,  0.19800000E 00,  0.20400000E 00,  0.18800000E 00,  0.15600000E 00,
          0.12100000E 00,  0.91000000E-01,  0.70000000E-01,  0.58000000E-01,  0.56000000E-01,
          0.54000000E-01,  0.48000000E-01,  0.41000000E-01,  0.29000000E-01,  0.16000000E-01,
          0.00000000E-38,  0.00000000E-38,  0.60000000E-01,  0.13000000E 00,  0.17400000E 00,
          0.19800000E 00,  0.20400000E 00,  0.18800000E 00,  0.15600000E 00,  0.12100000E 00,
          0.91000000E-01,  0.70000000E-01,  0.58000000E-01,  0.56000000E-01,  0.54000000E-01,
          0.48000000E-01,  0.41000000E-01,  0.29000000E-01,  0.16000000E-01,  0.00000000E-38,

 CNRA  =  0.00000000E-38, -0.32000000E-01, -0.62000000E-01, -0.83000000E-01, -0.95000000E-01,
         -0.95000000E-01, -0.84000000E-01, -0.64000000E-01, -0.43000000E-01, -0.24000000E-01,
         -0.10000000E-01, -0.20000000E-02, -0.30000000E-03, -0.30000000E-03, -0.20000000E-03,
         -0.20000000E-03, -0.10000000E-03, -0.10000000E-03, 0.00000000E-38,  0.00000000E-38,
         -0.21000000E-01, -0.40000000E-01, -0.53000000E-01, -0.57000000E-01, -0.57000000E-01,
         -0.50000000E-01, -0.38000000E-01, -0.26000000E-01, -0.14000000E-01, -0.60000000E-02,
         -0.10000000E-02, -0.20000000E-03, -0.20000000E-03, -0.10000000E-03, -0.10000000E-03,
         -0.10000000E-03, -0.10000000E-03, 0.00000000E-38,  0.00000000E-38, -0.20000000E-01,
         -0.40000000E-01, -0.53000000E-01, -0.57000000E-01, -0.57000000E-01, -0.50000000E-01,
         -0.38000000E-01, -0.26000000E-01, -0.14000000E-01, -0.60000000E-02, -0.10000000E-02,
         -0.20000000E-03, -0.20000000E-03, -0.10000000E-03, -0.10000000E-03, -0.10000000E-03,
         -0.10000000E-03, 0.00000000E-38,  0.00000000E-38, -0.24000000E-01, -0.58000000E-01,
         -0.77000000E-01, -0.89000000E-01, -0.89000000E-01, -0.79000000E-01, -0.60000000E-01,
         -0.41000000E-01, -0.22000000E-01, -0.90000000E-02, -0.20000000E-02, -0.30000000E-03,
         -0.30000000E-03, -0.20000000E-03, -0.20000000E-03, -0.10000000E-03, -0.10000000E-03,
          0.00000000E-38,  0.00000000E-38, -0.24000000E-01, -0.58000000E-01, -0.77000000E-01,
         -0.89000000E-01, -0.89000000E-01, -0.79000000E-01, -0.60000000E-01, -0.41000000E-01,
         -0.22000000E-01, -0.90000000E-02, -0.20000000E-02, -0.30000000E-03, -0.30000000E-03,
         -0.30000000E-03, -0.20000000E-03, -0.10000000E-03, -0.10000000E-03, 0.00000000E-38,

 XCRA  = -0.00000000E-19, -0.00000000E-19, -0.00000000E-19, -0.00000000E-19, -0.00000000E-19,
         -0.00000000E-19, -0.00000000E-19, -0.00000000E-19, -0.00000000E-19, -0.00000000E-19,
```

	-0.00000000E-19,	-0.00000000E-19,	-0.00000000E-19,	-0.00000000E-19,	-0.00000000E-19,
	-0.00000000E-19,	-0.00000000E-19,	-0.00000000E-19,	-0.00000000E-19,	-0.00000000E-19,
	-0.00000000E-19,	-0.00000000E-19,	-0.00000000E-19,	-0.00000000E-19,	-0.00000000E-19,
	-0.00000000E-19,	-0.00000000E-19,	-0.00000000E-19,	-0.00000000E-19,	-0.00000000E-19,
	-0.00000000E-19,	-0.00000000E-19,	0.00000000E-19,	-0.00000000E-19,	-0.00000000E-19,
	-0.00000000E-19,	-0.00000000E-19,	-0.00000000E-19,	-0.00000000E-19,	-0.00000000E-19,
	-0.00000000E-19,	-0.00000000E-19,	0.00000000E-19,	-0.00000000E-19,	-0.00000000E-19,
	0.00000000E-19,	-0.00000000E-19,	-0.00000000E-19,	0.00000000E-19,	0.00000000E-19,
	-0.00000000E-19,	-0.00000000E-19,	-0.00000000E-19,	-0.00000000E-19,	-0.00000000E-19,
	-0.00000000E-19,	-0.00000000E-19,	-0.00000000E-19,	-0.00000000E-19,	-0.00000000E-19,
	-0.00000000E-19,	-0.00000000E-19,	-0.00000000E-19,	-0.00000000E-19,	-0.00000000E-19,
	0.00000000E-19,	-0.00000000E-19,	-0.00000000E-19,	-0.00000000E-19,	-0.00000000E-19,
	-0.00000000E-19,	-0.00000000E-19,	-0.00000000E-19,	-0.00000000E-19,	-0.00000000E-19,
	-0.00000000E-19,	-0.00000000E-19,	-0.00000000E-19,	-0.00000000E-19,	-0.00000000E-19,
	0.00000000E-19,	-0.00000000E-19,	-0.00000000E-19,	-0.00000000E-19,	-0.00000000E-19,
	-

```
                0.50000000E 02,      0.60000000E 02,      0.70000000E 02,      0.80000000E 02,      0.90000000E 02,
                0.10000000E 03,      0.11000000E 03,      0.12000000E 03,      0.13000000E 03,      0.14000000E 03,
                0.15000000E 03,      0.16000000E 03,      0.17000000E 03,      0.18000000E 03,

 CLAFM  =      -0.67500000E 00,     -0.67500000E 00,     -0.12310000E 01,     -0.12270000E 01,     -0.11630000E-01,
               -0.12120000E 01,     -0.12120000E 01,     -0.00000000E-19,     -0.00000000E-19,     -0.00000000E-19,

 CMOFM  =      -0.39200000E 00,     -0.39200000E 00,     -0.39200000E 00,     -0.39200000E 00,     -0.39200000E 00,
               -0.39200000E 00,     -0.39200000E 00,     -0.00000000E-19,     -0.00000000E-19,     -0.00000000E-19,

 CMAFM  =      -0.18300000E 00,     -0.18300000E 00,     -0.12000000E-00,     -0.11500000E-00,     -0.13600000E-00,
               -0.13800000E 00,     -0.13800000E 00,     -0.00000000E-19,     -0.00000000E-19,     -0.00000000E-19,

 XCGOD  =       0.25000000E 00,

 D      =       0.15000000E 02,

 VTST   =       0.60000000E 03,

 GTST   =       0.20000000E 01,

 ZTST   =       0.20000000E 05,

 QTST   =       0.20000000E 03,

 XKT    =      -0.00000000E-19,

 ATRB   =       0.80000000E 00,

 BTRB   =       0.31800000E 01,

 CDROP  =       0.00000000E-38,

 ALPCR  =       0.00000000E-38,

 DELMAC =       0.50000000E 00,

 PTMAC  =       0.12000000E 01,

 QDYPT  =      -0.10000000F 03,

 CMIN   =       0.10000000E 01,

 CMCOD  =       0.27000000F 00,

 IPRORD =             0,

 IPRINT =             0,

 IPHEAT =             0,

 VSTOPO =       0.12000000E 05,

 XA     =       0.00000000E-38,

 IRNE   =       0.10000000E 02,

 KNE    =       0.23000000E 01,

 VIRNE  =      -0.00000000E-19,     -0.00000000E-19,     -0.00000000E-19,     -0.00000000E-19,     -0.00000000E-19,
```

	-0.00000000E-19,	-0.00000000E-19,	-0.00000000E-19,	-0.00000000E-19, -0.00000000E-19,
DIRNE =	-0.00000000E-19,	-0.00000000E-19,	-0.00000000E-19,	-0.00000000E-19, -0.00000000E-19,
	-0.00000000E-19,	-0.00000000E-19,	-0.00000000E-19,	-0.00000000E-19, -0.00000000E-19,
VGFDR =	0.39000000E 01,	0.27000000E 01,	0.18000000E 01,	-0.00000000E-19, -0.00000000E-19,
	-0.00000000E-19,	-0.00000000E-19,	-0.00000000E-19,	-0.00000000E-19, -0.00000000E-19,
TABDR =	0.62500000E-01,	0.12500000E-02,	0.25000000E-02,	-0.00000000E-19, -0.00000000E-19,
	-0.00000000E-19,	-0.00000000E-19,	-0.00000000E-19,	-0.00000000E-19, -0.00000000E-19,
BLAN =	0.00000000E-38,			
DELORC =	0.19200000E-01,	0.10400000E-01,	0.54000000E-02,	-0.00000000E-19, -0.00000000E-19,
	-0.00000000E-19,	-0.00000000E-19,	-0.00000000E-19,	-0.00000000E-19, -0.00000000E-19,
RGX =	0.30000000E 00,			
RGY =	0.22000000E 00,			
SSOR =	0.57000000E 00,			
REYT =	0.30000000E 06,			
XO =	0.00000000E-38,			
ALAN =	0.50000000E 00,			
THF =	0.10000000E 01,			
ATMOS =	0.38000000E 01,			
VEHICL =	0.60000000E 02,			
ZGGOD =	0.00000000E-38,			
DATE =	0.51100000E 01,			
CASE =	0.10000000E 01,			
MEMO =	0.16700000E 03,			

$-END

UNDRFLOW AT 60545 IN MQ ILL. CRG.
UNDRFLOW AT 60545 IN MQ ILL. CRG.
UNDRFLOW AT 60535 IN MQ ILL. CRG.
UNDRFLOW AT 60540 IN MQ ILL. CRG.
UNDRFLOW AT 60541 IN MQ ILL. CRG.

DATE 5.11 CASE 1.00 MEMO 167.00 ATM 3.80 VEHICLE 60.00

D	PS	QS	RS	XCG/D	IX	IY	M/CDA	ZST	ZTH
1.5000E 01	1.0450E 00	0.0000E-39	1.7700E 00	2.5000E-01	1.1664E-03	6.2726E-02	1.9997E-01	5.9422E-04	4.9148E-05

TIME	V	Y	RHOA	GAMMA	MACH	QS	QSTAR	QRE	REY	HM/RTO-ALBAR	DYN-PR	FREQ	GRNE	D/W	N/W
0.00	15290.	800000.	3.97E-24	-17.50	29.18	0.0	0.0	0.0	6.2E-12	208.9	142.3	0.0	0.0	0.0	0.0	0.0
130.77	15408.	238162.	1.14E-10	-12.02	29.96	0.8	0.8	0.0	1.9E-02	220.2	142.2	0.0	0.0	0.0	0.0	0.0
144.50	15624.	218110.	3.73E-10	-12.72	29.99	1.5	1.5	0.0	6.0E 02	220.6	144.1	0.0	0.0	0.0	0.0	0.0
150.38	15639.	198051.	1.20E-09	-12.52	30.02	2.7	2.7	0.0	1.9E-03	221.0	142.1	0.1	0.0	0.0	0.0	0.0
156.36	15652.	177916.	3.89E-09	-12.31	30.05	4.9	4.9	0.0	6.2E 03	221.4	143.3	0.5	0.1	0.0	0.1	0.0
162.45	15651.	157768.	1.27E-08	-12.09	30.06	8.9	8.9	0.0	2.0E-04	221.7	144.1	1.6	0.2	0.0	0.2	0.0
168.61	15654.	137756.	4.12E-08	-11.85	30.05	16.1	16.1	0.0	6.6E 04	221.5	143.1	5.0	0.3	0.0	0.4	0.0
174.90	15593.	117725.	1.34E-07	-11.65	29.93	28.7	28.7	0.0	2.1E 05	219.7	132.4	16.3	0.5	0.0	2.5	0.1
179.64	15459.	102958.	3.22E-07	-11.44	29.68	44.0	44.0	0.0	5.1E 05	216.0	76.4	38.5	0.8	0.0	6.0	0.5
183.07	15007.	92558.	5.98E-07	-11.40	28.98	56.8	56.8	0.0	9.2E 05	206.1	56.6	68.1	1.0	0.0	10.6	1.3
185.70	14496.	84907.	9.43E-07	-11.21	27.83	64.1	64.1	0.0	1.4E 06	190.1	46.6	99.0	1.2	0.0	15.4	1.9
187.42	13895.	80128.	1.25E-06	-11.18	26.67	66.1	66.1	0.0	1.8E-06	174.8	41.1	120.9	1.3	0.0	18.8	2.3
188.81	13293.	76438.	1.56E-06	-11.13	25.52	65.7	65.7	0.0	2.1E 06	160.1	37.1	137.9	1.4	0.0	21.4	2.5
189.90	12688.	73437.	1.92E-06	-11.23	24.36	63.5	63.5	0.0	2.4E 06	146.0	34.1	150.3	1.5	0.0	23.4	2.6
191.06	12085.	70875.	2.18E-06	-11.31	23.20	60.2	60.2	0.0	2.7E 06	132.6	31.5	158.8	1.5	0.0	24.7	2.7
192.03	11482.	68640.	2.49E-06	-11.11	22.04	55.4	55.4	0.0	2.9E-06	119.8	29.3	165.8	1.6	0.0	25.5	2.7
192.96	10881.	66615.	2.80E-06	-11.29	20.89	50.4	16.6	0.0	3.1E 06	107.8	27.1	166.1	1.6	0.0	25.8	2.6
193.87	10281.	64743.	3.14E-06	-11.17	19.74	45.2	15.2	0.0	3.3E-06	96.4	25.5	165.8	1.6	0.0	25.8	2.4
194.78	9677.	62987.	3.48E-06	-11.28	18.58	40.0	13.6	0.0	3.4E 06	85.5	23.9	163.1	1.6	0.0	25.3	2.3
195.69	9072.	61317.	3.85E-06	-11.23	17.42	34.8	12.0	0.0	3.5E-06	75.4	22.6	158.4	1.5	0.0	24.5	2.1
196.61	8471.	59732.	4.23E-06	-11.30	16.26	29.9	10.4	0.0	3.7E 06	65.9	21.3	151.8	1.5	0.0	23.5	2.0
197.58	7870.	58185.	4.54E-06	-11.38	14.95	25.1	8.7	0.0	3.6E-06	57.1	20.1	140.7	1.4	0.0	21.7	1.8
198.62	7266.	56632.	4.85E-06	-11.31	13.63	20.5	7.1	0.0	3.5E 06	48.9	19.1	128.0	1.4	0.0	19.6	1.5
199.78	6665.	55039.	5.17E-06	-11.43	12.35	16.5	5.7	0.0	3.3E-06	41.5	18.0	114.9	1.3	0.0	17.6	1.3
201.06	6051.	53416.	5.51E-06	-11.55	11.09	12.9	4.4	0.0	3.1E 06	34.6	16.9	101.3	1.2	0.0	15.4	1.0
202.52	5457.	51714.	5.85E-06	-11.63	9.86	9.9	3.4	0.0	3.0E-06	28.4	15.8	87.7	1.1	0.0	13.3	0.8
204.21	4855.	49935.	6.30E-06	-11.94	8.66	7.3	2.4	0.0	2.7E 06	22.9	14.8	74.2	1.0	0.0	11.2	0.7
206.24	4253.	48020.	6.75E-06	-12.22	7.48	5.1	1.7	0.0	2.5E-06	18.0	14.0	61.1	0.9	0.0	9.2	0.5
208.74	3652.	45921.	7.28E-06	-12.61	6.33	3.4	1.1	0.0	2.3E 06	13.8	13.1	48.5	0.8	0.0	7.3	0.3
211.97	3050.	43530.	7.90E-06	-13.23	5.20	2.1	0.7	0.0	2.0E-06	10.2	12.3	36.8	0.7	0.0	5.5	0.2
213.82	2775.	42295.	8.24E-06	-13.67	4.69	1.6	0.5	0.0	1.9E 06	8.8	11.8	31.7	0.6	0.0	4.7	0.2
215.97	2500.	40942.	8.62E-06	-14.17	4.19	1.2	0.4	0.0	1.7E-06	7.5	11.5	26.9	0.6	0.0	4.0	0.1
218.63	2218.	39387.	9.07E-06	-14.78	3.68	0.9	0.3	0.0	1.6E 06	6.4	10.9	22.3	0.5	0.0	3.3	0.1
221.91	1935.	37597.	9.60E-06	-15.62	3.18	0.6	0.2	0.0	1.4E-06	5.4	10.5	18.0	0.5	0.0	2.7	0.1
226.16	1649.	35433.	1.03E-05	-17.53	2.67	0.4	0.1	0.0	1.3E 06	4.5	10.1	14.0	0.4	0.0	2.1	0.1
231.91	1363.	32688.	1.12E-05	-19.75	2.17	0.2	0.1	0.0	1.1E-06	3.8	9.8	10.4	0.4	0.0	1.5	0.0
240.96	1070.	28772.	1.25E-05	-24.45	1.67	0.1	0.0	0.0	9.5E 05	3.2	9.6	7.2	0.3	0.0	1.0	0.0
256.80	777.	31573.	1.53E-05	-35.65	1.17	0.1	0.0	0.0	7.8E-05	2.9	9.7	4.6	0.3	0.0	0.6	0.0
301.38	556.	-51.	2.56E-05	-65.55	0.75	0.0	0.0	0.0	7.8E 05	3.2	6.7	4.0	0.3	0.0	0.4	-0.0

QS INTEGRAL = 1.63741E 03 QSTAR INTEGRAL = 1.28206E 03 QRE INTEGRAL = 1.13303E-03 QRNE INTEGRAL = 3.49088E-03
---AT MACH = 1.20000E 00, THE DATA ARE AS-FOLLOWS.

TIME	V	Z	RHOA	GAMMA	MACH	QS	QSTAR	QRE	REY	HM/RTO	ALBAR	DYN-PR	FREQ	QRNE	D/W	N/W
255.68	797.	22071.	1.51E-05	-34.88	1.20	0.1	0.0	0.0	7.9E 05	3.0	9.7	4.8	0.3	0.0	0.6	0.0

TIME AT TRANSITION = 189.99

$INPUT

ZTBL =
-0.00000000E-19, -0.00000000E-19, -0.00000000E-19, -0.00000000E-19, -0.00000000E-19,

```
                -0.00000000E-19,    -0.00000000E-19,    -0.00000000E-19,    -0.00000000E-19,    -0.00000000E-19,
                -0.00000000E-19,    -0.00000000E-19,    -0.00000000E-19,    -0.00000000E-19,    -0.00000000E-19,
                -0.00000000E-19,    -0.00000000E-19,    -0.00000000E-19,    -0.00000000E-19,    -0.00000000E-19,
                -0.00000000E-19,    -0.00000000E-19,    -0.00000000E-19,    -0.00000000E-19,    -0.00000000E-19,
                -0.00000000E-19,    -0.00000000E-19,    -0.00000000E-19,    -0.00000000E-19,    -0.00000000E-19,
                -0.00000000E-19,    -0.00000000E-19,    -0.00000000E-19,    -0.00000000E-19,    -0.00000000E-19,
                -0.00000000E-19,

MANDAL =        0.50000000E-00,     0.15000000E 01,     0.30000000E 01,     0.90000000E 01,     0.19000000E 02,
MONLY  =        0.00000000E-38,     0.50000000E-00,     0.15000000E 01,     0.30000000E 01,     0.90000000E 01,
                0.19000000E 02,     0.10000000E 03,     -0.00000000E-19,    -0.00000000E-19,    -0.00000000E-19,

 CDFH  =        0.10000000E 01,     0.10000000E 01,     0.15200000E 01,     0.15500000E 01,     0.15900000E 01,
                0.16300000E 01,     0.16300000E 01,     0.00000000E-19,     0.00000000E-19,     0.00000000E-19,

 VE    =        0.14000000E 05,

 GAME  =        0.13000000E 02,

 ZE    =        0.80000000E 06,

 MASS  =        0.57600000E 02,

 TSTOP =        0.10000000E 04,

 ZSTOP =        0.00000000E 38,

 FALR  =        0.99400000E 00,

 LTH   =        0.10000000E-19,

 RSL   =        0.11108000E 08,

 GSL   =        0.12300000E 02,

 XN    =        0.80000000E 00,

 XC    =        0.20000000E 00,

 TSL   =        0.27500000E 03,

 TST   =        0.20000000E 03,

 PTH   =        0.52500000E 03,

 RHOSL =        0.13200000E 04,

 DELTAT=        0.10000000E 01,

 UPBND =        0.10000000E 01,     0.10000000E 04,     0.10000000E 00,     0.10000000E 02,     0.10000000E 02,
                0.10000000E 03,     0.10000000E 03,     0.10000000E 03,

 DNBND =        0.10000000E 02,     0.10000000E 05,     0.10000000E 01,     0.10000000E 03,     0.10000000E 03,
                0.10000000E 04,     0.10000000E 04,     0.10000000E 04,

 UPDN  =        0.70000000E 00,

 XPRIN =        0.10000000E 01,

 TZERO =        0.00000000E 38,
```


74<

```
 DELHT =          0.10000000E-04,
 AR =             0.89516000F 05,
 MVE =                    1,
 LS =                     5,
 NPTST =                 51,
 PE =             0.10450000E 01,
 QE =            -0.00000000E-38,
 RE =             0.17700000E-01,
 CNFA =           0.00000000E-38,    0.53000000E-01,    0.11400000E-00,    0.15500000E-00,    0.17700000E-00,
                  0.18100000E 00,    0.16700000E 00,    0.13900000E 00,    0.10800000E 00,    0.81000000E-01,
                  0.62000000E-01,    0.52000000E-01,    0.50000000E-01,    0.48000000E-01,    0.43000000E-01,
                  0.36000000E-01,    0.26000000E-01,    0.14000000E-01,   -0.00000000E-38,    0.00000000E-38,
                  0.41000000E-01,    0.80000000E-01,    0.10700000E 00,    0.12200000E-00,    0.12400000E-00,
                  0.11500000E 00,    0.96000000E-01,    0.74000000E-01,    0.51000000E-01,    0.43000000E-01,
                  0.36000000E-01,    0.34000000E-01,    0.33000000E-01,    0.30000000E-01,    0.25000000E-01,
                  0.18000000E-01,    0.90000000E-02,    0.00000000E-38,    0.00000000E-38,    0.40000000E-01,
                  0.10000000E 00,    0.13300000E-00,    0.15200000E-00,    0.15500000E-00,    0.14300000E-00,
                  0.11900000E 00,    0.93000000E-01,    0.69000000E-01,    0.53000000E-01,    0.45000000E-01,
                  0.43000000E-01,    0.41000000E-01,    0.37000000E-01,    0.31000000E-01,    0.22000000E-01,
                  0.12000000E-01,    0.00000000E-38,    0.00000000E-38,    0.60000000E-01,    0.13000000E 00,
                  0.17400000E 00,    0.19800000E 00,    0.20400000E 00,    0.18800000E-00,    0.15600000E-00,
                  0.12100000E 00,    0.91000000E-01,    0.70000000E-01,    0.58000000E-01,    0.56000000E-01,
                  0.54000000E-01,    0.48000000E-01,    0.41000000E-01,    0.29000000E-01,    0.16000000E-01,
                  0.00000000E-38,    0.00000000E-38,    0.60000000E-01,    0.13000000E 00,    0.17400000E 00,
                  0.19800000E 00,    0.20400000E 00,    0.18800000E-00,    0.15600000E-00,    0.12100000E-00,
                  0.91000000E-01,    0.70000000E-01,    0.58000000E-01,    0.56000000E-01,    0.54000000E-01,
                  0.48000000E-01,    0.41000000E-01,    0.29000000E-01,    0.16000000E-01,    0.00000000E-38,
 CMFA =           0.00000000E-38,   -0.32000000E-01,   -0.62000000E-01,   -0.83000000E-01,   -0.95000000E-01,
                 -0.95000000E-01,   -0.84000000E-01,   -0.64000000E-01,   -0.43000000E-01,   -0.24000000E-01,
                 -0.10000000E-01,   -0.20000000E-02,   -0.30000000E-03,   -0.30000000E-03,   -0.20000000E-03,
                 -0.20000000E-03,   -0.10000000E-03,   -0.10000000E-03,    0.00000000E-38,    0.00000000E-38,
                 -0.21000000E-01,   -0.40000000E-01,   -0.53000000E-01,   -0.57000000E-01,   -0.57000000E-01,
                 -0.50000000E-01,   -0.38000000E-01,   -0.26000000E-01,   -0.14000000E-01,   -0.60000000E-02,
                 -0.10000000E-02,   -0.20000000E-03,   -0.20000000E-03,   -0.10000000E-03,   -0.10000000E-03,
                 -0.10000000E-03,   -0.10000000E-03,    0.00000000E-38,    0.00000000E-38,   -0.20000000E-01,
                 -0.60000000E-01,   -0.53000000E-01,   -0.57000000E-01,   -0.57000000E-01,   -0.50000000E-01,
                 -0.38000000E-01,   -0.26000000E-01,   -0.14000000E-01,   -0.60000000E-02,   -0.10000000E-02,
                 -0.20000000E-03,   -0.20000000E-03,   -0.10000000E-03,   -0.10000000E-03,   -0.10000000E-03,
                 -0.10000000E-03,    0.00000000E-38,    0.00000000E-38,   -0.24000000E-01,   -0.58000000E-01,
                 -0.77000000E-01,   -0.89000000E-01,   -0.89000000E-01,   -0.79000000E-01,   -0.60000000E-01,
                 -0.41000000E-01,   -0.22000000E-01,   -0.90000000E-02,   -0.20000000E-02,   -0.30000000E-03,
                 -0.30000000E-03,   -0.20000000E-03,   -0.20000000E-03,   -0.10000000E-03,   -0.10000000E-03,
                  0.00000000E-38,    0.00000000E-38,   -0.24000000E-01,   -0.58000000E-01,   -0.77000000E-01,
                 -0.89000000E-01,   -0.89000000E-01,   -0.79000000E-01,   -0.60000000E-01,   -0.41000000E-01,
                 -0.22000000E-01,   -0.90000000E-02,   -0.20000000E-02,   -0.30000000E-03,   -0.30000000E-03,
                 -0.20000000E-03,   -0.20000000E-03,   -0.10000000E-03,   -0.10000000E-03,    0.00000000E-38,
 XCPFA =         -0.00000000E-19,   -0.00000000E-19,   -0.00000000E-19,   -0.00000000E-19,   -0.00000000E-19,
                 -0.00000000E-19,   -0.00000000E-19,   -0.00000000E-19,   -0.00000000E-19,   -0.00000000E-19,
                 -0.00000000E-19,   -0.00000000E-19,   -0.00000000E-19,   -0.00000000E-19,   -0.00000000E-19,
```

	-0.00000000E-19,	-0.00000000E-19,	-0.00000000E-19,	-0.00000000E-19,	-0.00000000E-19,
	-0.00000000E-19,	-0.00000000E-19,	-0.00000000E-19,	-0.00000000E-19,	-0.00000000E-19,
	0.00000000E-19,	0.00000000E-19,	0.00000000E-19,	0.00000000E-19,	-0.00000000E-19,
	-0.00000000E-19,	-0.00000000E-19,	-0.00000000E-19,	-0.00000000E-19,	-0.00000000E-19,
	-0.00000000E-19,	-0.00000000E-19,	0.00000000E-19,	0.00000000E-19,	0.00000000E-19,
	-0.00000000E-19,	-0.00000000E-19,	-0.00000000E-19,	-0.00000000E-19,	-0.00000000E-19,
	-0.00000000E-19,	-0.00000000E-19,	-0.00000000E-19,	0.00000000E-19,	0.00000000E-19,
	-0.00000000E-19,	-0.00000000E-19,	-0.00000000E-19,	-0.00000000E-19,	-0.00000000E-19,
	-0.00000000E-19,	-0.00000000E-19,	-0.00000000E-19,	-0.00000000E-19,	-0.00000000E-19,
	-0.00000000E-19,	-0.00000000E-19,	-0.00000000E-19,	-0.00000000E-19,	-0.00000000E-19,
	-0.00000000E-19,	-0.00000000E-19,	-0.00000000E-19,	-0.00000000E-19,	-0.00000000E-19,
	-0.00000000E-19,	-0.00000000E-19,	-0.00000000E-19,	-0.00000000E-19,	-0.00000000E-19,
	-0.00000000E-19,	-0.00000000E-19,	-0.00000000E-19,	-0.00000000E-19,	-0.00000000E-19,
	-0.00000000E-19,	-0.00000000E-19,	-0.00000000E-19,	-0.00000000E-19,	-0.00000000E-19,
	-0.00000000E-19,	-0.00000000E-19,	-0.00000000E-19,	-0.00000000E-19,	-0.00000000E-19,
	-0.00000000E-19,	-0.00000000E-19,	-0.00000000E-19,	-0.00000000E-19,	-0.00000000E-19,
CHQFA =	-0.39200000E 00,	-0.38600000E 00,	-0.36900000E 00,	-0.34000000E 00,	-0.30100000E 00,
	-0.25300000E 00,	-0.19700000E 00,	-0.16100000E 00,	-0.13100000E 00,	-0.10200000E 00,
	-0.15000000E 00,	-0.20000000E 00,	-0.25400000E 00,	-0.32600000E 00,	-0.38700000E 00,
	-0.43700000E 00,	-0.47400000E 00,	-0.49700000E 00,	-0.50500000E 00,	-0.39200000E 00,
	-0.38600000E 00,	-0.36900000E 00,	-0.34000000E 00,	-0.30100000E 00,	-0.25300000E 00,
	-0.19700000E 00,	-0.16100000E 00,	-0.13100000E 00,	-0.10200000E 00,	-0.15000000E 00,
	-0.20000000E 00,	-0.25400000E 00,	-0.32600000E 00,	-0.38700000E 00,	-0.43700000E 00,
	-0.47400000E 00,	-0.49700000E 00,	-0.50500000E 00,	-0.39200000E 00,	-0.38600000E 00,
	-0.36900000E 00,	-0.34000000E 00,	-0.30100000E 00,	-0.25300000E 00,	-0.19700000E 00,
	-0.16100000E 00,	-0.13100000E 00,	-0.10200000E 00,	-0.15000000E 00,	-0.20000000E 00,
	-0.25400000E 00,	-0.32600000E 00,	-0.38700000E 00,	-0.43700000E 00,	-0.47400000E 00,
	-0.49700000E 00,	-0.50500000E 00,	-0.39200000E 00,	-0.38600000E 00,	-0.36900000E 00,
	-0.34000000E 00,	-0.30100000E 00,	-0.25300000E 00,	-0.19700000E 00,	-0.16100000E 00,
	-0.13100000E 00,	-0.10200000E 00,	-0.15000000E 00,	-0.20000000E 00,	-0.25400000E 00,
	-0.32600000E 00,	-0.38700000E 00,	-0.43700000E 00,	-0.47400000E 00,	-0.49700000E 00,
	-0.50500000E 00,	-0.39200000E 00,	-0.38600000E 00,	-0.36900000E 00,	-0.34000000E 00,
	-0.30100000E 00,	-0.25300000E 00,	-0.19700000E 00,	-0.16100000E 00,	-0.13100000E 00,
	-0.10200000E 00,	-0.15000000E 00,	-0.20000000E 00,	-0.25400000E 00,	-0.32600000E 00,
	-0.38700000E 00,	-0.43700000E 00,	-0.47400000E 00,	-0.49700000E 00,	-0.50500000E 00,
CXFA =	0.10000000E 01,	0.98000000E 00,	0.93000000E 00,	0.82000000E 00,	0.67000000E 00,
	0.53000000E 00,	0.39000000E 00,	0.27000000E 00,	0.16000000E 00,	0.70000000E-01,
	0.40000000E-01,	0.18000000E 00,	0.34000000E 00,	0.52000000E 00,	0.69000000E 00,
	0.85000000E 00,	0.98000000E 00,	0.10400000E 01,	0.10600000E 01,	0.15200000E 01,
	0.14700000E 01,	0.13700000E 01,	0.12300000E 01,	0.10700000E 01,	0.78000000E 00,
	0.56000000E 00,	0.38000000E 00,	0.22000000E 00,	0.11000000E 00,	0.20000000E-01,
	0.21000000E 00,	0.44000000E 00,	0.72000000E 00,	0.10000000E 01,	0.12400000E 01,
	0.14500000E 01,	0.15500000E 01,	0.15700000E 01,	0.15500000E 01,	0.14600000E 01,
	0.13300000E 01,	0.11700000E 01,	0.10000000E 01,	0.76000000E 00,	0.54000000E 00,
	0.36000000E 00,	0.20000000E 00,	0.90000000E-01,	0.40000000E-01,	0.23000000E 00,
	0.46000000E 00,	0.74000000E 00,	0.10200000E 01,	0.12600000E 01,	0.14700000E 01,
	0.15800000E 01,	0.16000000E 01,	0.15900000E 01,	0.15100000E 01,	0.13000000E 01,
	0.11200000E 01,	0.94000000E 00,	0.74000000E 00,	0.52000000E 00,	0.34000000E 00,
	0.17000000E 00,	0.60000000E-01,	0.70000000E-01,	0.26000000E 00,	0.49000000E 00,
	0.78000000E 00,	0.10600000E 01,	0.13000000E 01,	0.15100000E 01,	0.16200000E 01,
	0.16400000E 01,	0.16300000E 01,	0.15600000E 01,	0.13400000E 01,	0.11500000E 01,
	0.97000000E 00,	0.76000000E 00,	0.57000000E 00,	0.38000000E 00,	0.20000000E 00,
	0.80000000E-01,	0.60000000E-01,	0.25000000E 00,	0.47000000E 00,	0.77000000E 00,
	0.10500000E 01,	0.13000000E 01,	0.15200000E 01,	0.16700000E 01,	0.16900000E 01,
ALPHAE =	0.14230000E 03,				
TABAL =	0.00000000E-38,	0.10000000E 02,	0.20000000E 02,	0.30000000E 02,	0.40000000E 02,

764

	0.50000000E-02, 0.10000000E 03, 0.15000000E-03,	0.60000000E-02, 0.11000000E 03, 0.16000000E-03,	0.70000000E-02, 0.12000000E 03, 0.17000000E-03,	0.80000000E-02, 0.13000000E 03, 0.18000000E-03,	0.90000000E-02, 0.14000000E 03,	
CLAFM =	-0.67500000E-00, -0.12120000E 01,	-0.67500000E-00, -0.12120000E 01,	-0.12310000E-01, -0.00000000E-19,	-0.12270000E-01, -0.00000000E-19,	-0.11630000E-01, -0.00000000E-19,	
CMQFM =	-0.39200000E 00, -0.39200000E-00,	-0.39200000E 00, -0.39200000E-00,	-0.39200000E 00, -0.00000000E-19,	-0.39200000E 00, -0.00000000E-19,	-0.39200000E 00, -0.00000000E-19,	
CNAFM =	-0.18300000E-00, -0.13800000E 00,	-0.18300000E-00, -0.13800000E 00,	-0.12000000E-00, -0.00000000E-19,	-0.11500000E-00, -0.00000000E-19,	-0.13800000E-00, -0.00000000E-19,	
XCGOD =	0.25000000E 00,					
D =	0.15000000E 02,					
VTST =	0.60000000E 03,					
GTST =	0.20000000E 01,					
ZTST =	0.20000000E 05,					
QTST =	0.20000000E 03,					
XKT =	-0.00000000E-19,					
ATRB =	0.80000000E 00,					
BTRB =	0.31800000E 01,					
CDROP =	0.00000000E-38,					
ALPCR =	0.00000000E-38,					
DELMAC =	0.50000000E 00,					
PIMAC =	0.12000000E 01,					
QDYPT =	-0.10000000E 03,					
CMIN =	0.10000000E 01,					
CMCOD =	0.27000000E 00,					
IPRORD =	0,					
IPRINT =	0,					
IPHEAT =	0,					
VSTOPQ =	0.12000000E 05,					
XA =	0.00000000E-38,					
IRNE =	0.10000000E 02,					
KNE =	0.23000000E 01,					
VIRNE =	-0.00000000E-19, -0.00000000E-19,	-0.00000000E-19, -0.00000000E-19,	-0.00000000E-19, -0.00000000E-19,	-0.00000000E-19, -0.00000000E-19,	-0.00000000E-19, -0.00000000E-19,	
DIRNE =	0.00000000E-19, -0.00000000E-19,	0.00000000E-19, -0.00000000E-19,	0.00000000E-19, -0.00000000E-19,	0.00000000E-19, -0.00000000E-19,	0.00000000E-19, -0.00000000E-19,	
VGFOR =	0.39000000E 01, 0.00000000E-19,	0.27000000E 01, 0.00000000E-19,	0.18000000E 01, 0.00000000E-19,	-0.00000000E-19, -0.00000000E-19,	-0.00000000E-19, -0.00000000E-19,	
TABDR =	0.62500000E-01, -0.00000000E-19,	0.12500000E-02, -0.00000000E-19,	0.25000000E-02, -0.00000000E-19,	0.00000000E-19, -0.00000000E-19,	0.00000000E-19, -0.00000000E-19,	
SLAM =	0.00000000E-38,					
DELORC =	0.19200000E-01, 0.00000000E-19,	0.10400000E-01, 0.00000000E-19,	0.54000000E-02, 0.00000000E-19,	-0.00000000E-19, 0.00000000E-19,	-0.00000000E-19, -0.00000000E-19,	
RGX =	0.30000000E 00,					
RGY =	0.22000000E 00,					
SSOD =	0.57000000E-00,					
REYT =	0.30000000E 06,					
XO =	0.00000000E-38,					
ALAM =	0.50000000E 00,					
THF =	0.10000000E 01,					
ATMOS =	0.38000000E 01,					
VEHICL =	0.60000000E 02,					
ZCGOD =	0.00000000E-38,					
DATE =	0.51100000E 01,					
CASE =	0.20000000E 01,					
MEMO =	0.16700000E 03,					
$END						

NO VALID SOLU. IN ZONE2

DATE 5.11 CASE 2.00 MEMO 167.00 ATH 3.80 VEHICLE 60.00

D	PE	QE	RE	XGG/D	IX	IY	M/CDA	ZST	ZTH
1.5000E-01	1.0450E-00	0.0000E-39	1.7700E-00	2.5000E-01	1.1664E-03	6.2726E-02	2.0292E-01	6.3360E-04	4.9202E-05

TIME	V	Z	RHOA	GAMMA	MACH	QS	QSTAR	QRE	REY	HM/RTO	ALBAR	DYN PR	FREQ	QRNE	D/W	N/W
0.00	14000.	800000.	2.51E-12	-13.00	15.71	0.1	0.1	0.0	1.9E 00	127.5	142.3	0.0	0.0	0.0	0.0	0.0
83.61	14189.	554538.	3.70E-10	-11.03	15.92	1.0	1.0	0.0	2.1E-02	130.9	141.9	0.0	0.0	0.0	0.0	0.0
91.06	14205.	534457.	3.99E-10	-10.85	15.94	1.2	1.2	0.0	3.1E 02	131.1	141.2	0.0	0.0	0.0	0.0	0.0
98.66	14220.	514303.	5.91E-10	-10.66	15.95	1.5	1.5	0.0	4.6E-02	131.4	141.3	0.1	0.0	0.0	0.0	0.0
106.34	14236.	494265.	8.75E-10	-10.47	15.97	1.8	1.8	0.0	6.8E 02	131.7	142.5	0.1	0.0	0.0	0.0	0.0
114.20	14251.	474110.	1.30E-09	-10.28	15.99	2.3	2.3	0.0	1.0E-03	132.0	142.5	0.1	0.0	0.0	0.0	0.0
122.15	14265.	454074.	1.93E-09	-10.08	16.00	2.8	2.8	0.0	1.5E 03	132.2	143.7	0.2	0.1	0.0	0.0	0.0
130.24	14278.	434052.	2.88E-09	-9.88	16.02	3.4	3.4	0.0	2.3E-03	132.5	142.7	0.3	0.1	0.0	0.0	0.0
138.51	14291.	414007.	4.28E-09	-9.67	16.03	4.1	4.1	0.0	3.4E 03	132.7	144.2	0.4	0.1	0.0	0.1	0.0
146.93	14302.	393995.	6.39E-09	-9.45	16.04	5.1	5.1	0.0	5.0E-03	132.9	144.2	0.7	0.1	0.0	0.1	0.0
155.55	14310.	373969.	9.54E-09	-9.24	16.05	6.2	6.2	0.0	7.5E 03	133.0	143.5	1.0	0.1	0.0	0.2	0.0
164.37	14313.	353953.	1.43E-08	-9.01	16.06	7.6	7.6	0.0	1.1E-04	133.1	143.8	1.5	0.1	0.0	0.2	0.0
173.44	14310.	333864.	2.14E-08	-8.79	16.05	9.3	9.3	0.0	1.7E 04	133.0	143.3	2.2	0.2	0.0	0.3	0.0
182.71	14298.	313856.	3.21E-08	-8.57	16.04	11.4	11.4	0.0	2.5E-04	132.8	142.2	3.3	0.2	0.0	0.5	0.0
192.25	14270.	293783.	4.82E-08	-8.35	16.01	13.9	13.9	0.0	3.8E 04	132.3	141.2	4.9	0.3	0.0	0.8	0.0
202.10	14222.	273728.	7.25E-08	-8.09	15.96	16.9	16.9	0.0	5.7E-04	131.6	139.0	7.3	0.3	0.0	1.1	0.0
212.27	14137.	253707.	1.09E-07	-7.84	15.86	20.4	20.4	0.0	8.5E 04	129.9	134.2	10.9	0.4	0.0	1.7	0.1
221.55	14033.	236076.	1.57E-07	-7.63	15.74	23.9	23.9	0.0	1.2E-05	128.0	124.8	15.4	0.5	0.0	2.4	0.1
229.58	13939.	221300.	2.13E-07	-7.45	15.64	27.3	27.3	0.0	1.6E 05	126.4	94.8	20.7	0.6	0.0	3.2	0.2
236.80	13823.	208427.	2.77E-07	-7.31	15.49	29.7	29.7	0.0	2.1E-05	122.6	73.3	26.1	0.6	0.0	4.0	0.4
243.58	13367.	196824.	3.52E-07	-7.1+	15.00	30.0	30.0	-0.0	2.6E 05	116.4	62.3	31.5	0.7	-0.0	4.8	0.5
250.28	12862.	185890.	4.42E-07	-7.05	14.43	30.4	30.4	0.0	3.1E-05	108.0	54.1	36.6	0.7	0.0	5.6	0.7
256.29	12261.	176599.	5.36E-07	-7.00	13.76	28.6	28.6	0.0	3.6E 05	98.4	47.9	40.3	0.8	0.0	6.2	0.8
261.32	11660.	169223.	6.25E-07	-7.06	13.08	26.3	26.3	0.0	4.0E-05	89.2	43.6	42.5	0.8	0.0	6.5	0.8
265.91	11060.	162846.	7.13E-07	-7.04	12.41	23.8	23.8	0.0	4.3E 05	80.5	39.8	43.6	0.8	0.0	6.7	0.8
270.20	10459.	157185.	8.03E-07	-7.01	11.73	21.1	21.1	0.0	4.6E-05	72.3	36.5	43.9	0.8	0.0	6.7	0.8
274.35	9858.	151982.	8.95E-07	-7.07	11.06	18.4	18.4	0.0	4.8E 05	64.5	34.1	43.5	0.8	0.0	6.6	0.8
278.44	9255.	147092.	9.91E-07	-7.21	10.38	15.8	15.8	0.0	5.0E-05	57.2	31.8	42.4	0.8	0.0	6.5	0.7
282.53	8651.	142452.	1.09E-06	-7.35	9.71	13.4	13.4	0.0	5.2E 05	50.3	29.3	40.9	0.8	0.0	6.2	0.7
286.68	8048.	137972.	1.20E-06	-7.51	9.03	11.2	11.2	0.0	5.3E-05	43.9	27.4	38.8	0.8	0.0	5.9	0.6
290.97	7447.	133566.	1.31E-06	-7.72	8.35	9.1	9.1	0.0	5.4E 05	38.0	25.7	36.5	0.7	0.0	5.5	0.5
295.47	6847.	129166.	1.44E-06	-7.97	7.68	7.3	7.3	0.0	5.4E-05	32.5	24.0	33.8	0.7	0.0	5.1	0.5
300.29	6246.	124689.	1.58E-06	-8.30	7.01	5.7	5.7	0.0	5.4E 05	27.5	22.8	30.9	0.7	0.0	4.6	0.4
305.53	5645.	120061.	1.74E-06	-8.72	6.33	4.3	4.3	0.0	5.4E-05	22.9	21.4	27.8	0.6	0.0	4.2	0.3
311.32	5043.	115189.	1.93E-06	-9.30	5.66	3.2	3.2	0.0	5.3E 05	18.8	20.1	24.6	0.6	0.0	3.7	0.3
317.72	4456.	110057.	2.15E-06	-10.04	5.00	2.3	2.3	0.0	5.3E-05	15.3	18.9	21.4	0.5	0.0	3.2	0.2
323.28	4007.	105772.	2.36E-06	-10.96	4.50	1.7	1.7	0.0	5.2E 05	12.9	18.0	18.9	0.5	0.0	2.8	0.2
329.61	3558.	101043.	2.60E-06	-11.98	3.99	1.2	1.2	0.0	5.1E-05	10.7	17.2	16.5	0.5	0.0	2.4	0.1
336.98	3109.	95705.	2.91E-06	-13.21	3.49	0.8	0.8	0.0	5.0E 05	8.8	16.4	14.1	0.4	0.0	2.1	0.1
345.79	2660.	89474.	3.32E-06	-15.32	2.98	0.5	0.5	0.0	4.8E-05	7.1	15.6	11.7	0.4	0.0	1.7	0.1
356.68	2211.	81938.	3.89E-06	-18.19	2.48	0.3	0.3	0.0	4.7E 05	5.7	15.0	9.5	0.3	0.0	1.4	0.1
370.79	1766.	72306.	4.77E-06	-22.75	1.98	0.2	0.2	0.0	4.6E-05	4.6	14.4	7.4	0.3	0.0	1.1	0.0
390.21	1335.	59151.	6.15E-06	-30.44	1.48	0.1	0.1	0.0	4.4E 05	3.8	14.1	5.5	0.3	0.0	0.8	0.0
429.26	949.	32015.	8.96E-06	-49.33	0.98	0.0	0.0	0.0	4.0E-05	3.7	12.6	4.0	0.3	0.0	0.5	0.0
473.07	791.	-16.	1.32E-05	-67.55	0.76	0.0	0.0	0.0	4.3E 05	4.0	9.4	4.1	0.3	0.0	0.4	0.0

QS INTEGRAL = 2.98912E 03 QSTAR INTEGRAL = 2.98912E 03 QRE INTEGRAL = 7.94109E-02 QRNE INTEGRAL = 5.51493E-02
AT MACH = 1.20000E-00, THE DATA ARE AS FOLLOWS.

TIME	V	Z	RHOA	GAMMA	MACH	QS	QSTAR	QRE	REY	HM/RTO	ALBAR	DYN PR	FREQ	QRNE	D/W	N/W
411.96	1120.	44036.	7.71E-06	-40.95	1.20	0.1	0.1	0.0	4.2E 05	3.8	13.3	4.7	0.3	0.0	0.6	0.0

TRANSITION DID NOT OCCUR.

III. COMPUTATIONS

A. BLOCK DIAGRAM

In the following pages are presented a block diagram (Figure 12) illustrating the operation of Program 1880, and a list of equations which are solved by the computer. The block diagram is arranged to indicate the sequence of operations as they are performed within the computer. Input data are located at the top of the diagram, computations are shown in the center, and outputs are grouped at the bottom. The list of equations which follow the diagram is divided into groups corresponding to the computation blocks in the diagram. Symbols used precede the equations.

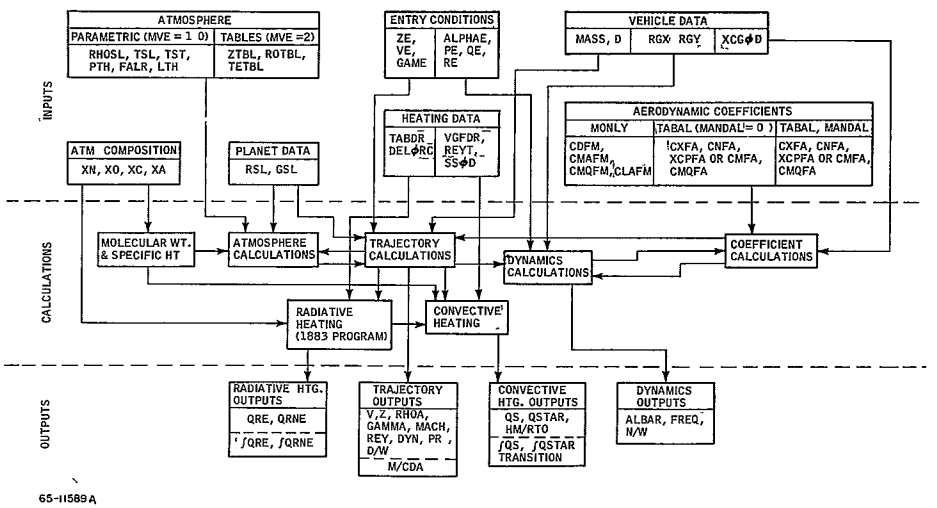

Figure 12 BLOCK DIAGRAM ILLUSTRATING OPERATION OF PROGRAM 1880

B. SYMBOLS:

a	Speed of sound, ft/sec
a	(with subscript) density exponent in convective heating formula
A	reference area $\left(\frac{\pi d^2}{4}\right)$, ft^2
b	(with subscript) velocity exponent in convective heating formula
c_p	specific heat at constant pressure, Btu/lb
C_D	drag coefficient
C_L	lift coefficient
C_{L_α}	lift coefficient derivative, per radian
C_m	pitching moment coefficient
$C_{m_{\dot{\alpha}}}$	pitching moment derivative, per radian
C_{m_q}	pitch damping coefficient, per radian
C_N	normal force coefficient
C_X	axial force coefficient
d	reference length (diameter), feet
D	drag, pounds
g	local acceleration of gravity, ft/sec^2
$g_\oplus$	Earth gravity at sea level, 32.17 ft/sec^2
H	enthalpy, ft^2/sec^2
I_X	roll moment of inertia, $slug\text{-}ft^2$
I_Y	moment of inertia in pitch and yaw, $slug\text{-}ft^2$

K	(with subscript) heating constant
L	temperature gradient, $^{o}K/ft$
m	mass, slugs
M	molecular weight and Mach number
N	normal force, pounds
p	pressure, lb/ft^2
P	vehicle roll rate, rad/sec
q	dynamic pressure $(\rho_a V^2/2)$, lb/ft^2
q	(with subscript) heating rate, Btu/ft^2-sec
Q	vehicle pitch rate, rad/sec
R	vehicle yaw rate, rad/sec
R	universal gas constant, 89,516 ft^2/sec^2-mole-^{o}K
R_Z	radius from center of planet, feet
Re	Reynolds number
S*	distance from stagnation point to sonic point, feet
t	time, seconds
T	temperature, ^{o}K
V	velocity, ft/sec
W	Earth weight, pounds
X_{cg}	distance from nose to center of gravity, feet
X_{cm}	distance from nose to center of gravity for C_m data, feet
X_{cp}	distance from nose to center of pressure, feet
X_A	mole fraction of argon in atmosphere
X_C	mole fraction of carbon dioxide in atmosphere

RE-ORDER No. 66-417

X_N mole fraction of nitrogen in atmosphere

X_O mole fraction of oxygen in atmosphere

Z altitude, feet

α angle of attack, degrees

α' total angle of attack (angle between vehicle axis of symmetry and velocity vector), degrees

$\bar{\alpha}$ total angle of attack envelope, degrees (max. value)

β angle of sideslip, degrees

β inverse scale height, feet^{-1}

γ flight path angle (positive in climb), degrees

γ adiabatic exponent

θ pitch angle, degrees

μ viscosity, lb-sec/ft^2

ρ density, slug/ft^3

σ non-dimensional radius of gyration, $\left(\sqrt{\frac{I}{md^2}}\right)$

ϕ roll angle, degrees

ψ yaw angle, degrees

ω_n undamped natural frequency, rad/sec

Superscript:

$*$ sonic point

Subscripts:

∞ ambient

L laminar

RE radiant equilibrium

83

RE-ORDER No. 66-47

RNE	radiant nonequilibrium
S	stagnation point
SL	sea level
ST	stratosphere
T	turbulent
TH	thermosphere
TR	troposphere
Z	at altitude Z

C. EQUATIONS

1. Molecular Weight and Specific Heat

$$X_N + X_O + X_C + X_A = 1.0 \tag{1}$$

$$M = 28\,X_N + 32\,X_O + 44\,X_C + 40\,X_A \tag{2}$$

$$\frac{c_p}{R} = \frac{3.5\,X_N + 3.5\,X_O + 4.0\,X_C + 2.5\,X_A}{M} \tag{3}$$

2. Atmosphere Calculations

a. Troposphere

$$T = T_{SL} + L_{TR}\,Z \tag{4}$$

$$\rho = \rho_{SL}\,\frac{T_{SL}}{T_Z}\,e^{-\left\{\frac{M g_{SL}}{R(T_{SL} - L_{TR} R_{SL})}\left[\frac{Z R_{SL}}{R_{SL} + Z} + \frac{L_{TR} R_{SL}^2 \ln\left\{\frac{R_{SL}(T_{SL} + L_{TR} Z)}{T_{SL}(R_{SL} + Z)}\right\}}{T_{SL} - L_{TR} R_{SL}}\right]\right\}} \tag{5}$$

84

where,

$$L_{TR} = -L_1 \, g_{SL}/c_p \tag{6}$$

L_1 = temp gradient in troposphere expressed as a fraction of the adiabatic lapse rate

b. Stratosphere

$$\rho = \rho_{ST} \, e^{\beta_{ST} Z_{ST}} \, e^{-\beta_Z Z}$$

$$\beta = \frac{M \, g_{SL} \, R_{SL}}{R \, T_{ST} (R_{SL} + Z)}$$

$$\rho_{ST} = \rho_{SL} \left(\frac{T_{SL}}{T_{ST}} \right)^{\left\{ \frac{M \, g_{SL}}{R (T_{SL} - L_{TR} R_{SL})} \left[\frac{Z_{ST} R_{SL}}{R_{SL} + Z_{ST}} + \frac{L_{TR} R_{SL}^2 \ln \left\{ \frac{R_{SL} (T_{ST} + L_{TR} Z_{ST})}{T_{SL} (R_{SL} + Z_{ST})} \right\}}{T_{SL} - L_{TP} R_{SL}} \right] \right\}} \tag{9}$$

$$\beta_{ST} = \frac{M \, g_{SL} \, R_{SL}}{R \, T_{ST} (R_{SL} + Z_{ST})} \tag{10}$$

$$Z_{ST} = \frac{(T_{ST} - T_{SL})}{L_{TR}} \tag{11}$$

c. Thermosphere:

$$T = T_{ST} + L_{TH} (Z - Z_{TH}) \tag{12}$$

$$\rho = \rho_{TH} \left(\frac{T_{ST}}{T_Z} \right)^{\left\{ \frac{M \, g_{SL}}{R [T_{ST} - L_{TH} (R_{SL} + Z_{TH})]} \left[\frac{R_{SL}^2 (Z - Z_{TH})}{(R_{SL} + Z)(R_{SL} + Z_{TH})} + \frac{L_{TH} R_{SL}^2 \ln \left\{ \frac{[T_{ST} + L_{TH} (Z - Z_{TH})](R_{SL} + Z_{TH})}{T_{ST} (R_{SL} + Z)} \right\}}{T_{ST} - L_{TH} (R_{SL} + Z_{TH})} \right] \right\}} \tag{13}$$

$$\rho_{TH} = P_{TH}\, M/R\, T_{ST} \tag{14}$$

$$Z_{TH} = \frac{R\, T_{ST}\, R_{SL}\, \ln(\bar{\rho}/\rho_{TH})}{M\, g_{SL}\, R_{SL} - R\, T_{ST}\, \ln(\bar{\rho}/\rho_{TH})} \tag{15}$$

$$\rho = \rho_{ST}\, e^{(\beta_{ST}\, Z_{ST})} \tag{16}$$

d. Speed of Sound:

$$a = \left[\frac{\left(\frac{c_p}{R}\right) RT}{\left(\frac{c_p}{R}\right) M - 1} \right]^{1/2} \tag{17}$$

3. Trajectory Calculations

a. Equations of Motion:

$$\dot{V} = \frac{-C_D\, q\, A}{m} - g \sin\gamma \tag{18}$$

$$V\dot{\gamma} = \frac{V^2 \cos\gamma}{R_Z} - g\cos\gamma + \frac{C_L A q}{m} \frac{\sin\theta}{\sin\alpha} \tag{19}$$

b. Supplementary Relationships

$$\dot{Z} = V \sin\gamma \tag{20}$$

$$M = V/a \tag{21}$$

$$q = \rho_a\, V^2/2 \tag{22}$$

$$g = g_{SL}\, (R_{SL}/R_Z)^2 \tag{23}$$

$$R_Z = R_{SL} + Z \tag{24}$$

ρ = f(Z) from atm calcs.

$$Re = \rho_a\, V\, d/\mu \tag{25}$$

μ = f(T) from built in viscosity table

$T = f(Z)$ from atm. calcs.

$$D/W = (C_D)_{\alpha = 0} \, q A/m g_{\oplus} \tag{26}$$

$C_D = f(M, \alpha')$ from coefficient calculations

4. Dynamics Calculations

a. Equations of Motion

The $\dot{Q}$ equation is given in Section I. B. 4 (Calculation Model) (27)

The $\dot{R}$ equation is given in Section I. B. 4 (Calculation Model) (28)

b. Supplementary Relationships:

$$\dot{\psi} = (R \cos \phi + Q \sin \phi) \sec \theta \tag{29}$$

$$\dot{\theta} = (Q \cos \phi - R \sin \phi) \tag{30}$$

$$\dot{\phi} = (P + \dot{\psi} \sin \phi) \tag{31}$$

$$I_X = m \sigma_x^2 d^2 \tag{32}$$

$$I_Y = m \sigma_y^2 d^2 \tag{33}$$

$$\sin \alpha = (\sin \theta \cos \psi \cos \phi + \sin \psi \sin \phi) \tag{34}$$

$$\sin \beta = (\sin \psi \cos \phi - \sin \theta \cos \psi \sin \phi) \tag{35}$$

$$\sin \alpha' = (\sin^2 \psi + \cos^2 \psi \sin^2 \theta)^{1/2} \tag{36}$$

$$N/W = C_N(\bar{\alpha}) \, q A/m g_{\oplus} \tag{37}$$

$C_N, C_m, C_{m_q}, C_{L_\alpha} = f(M, \alpha')$ from coefficient calculations

c. Linearized Equations of Motion

$$\left(\frac{\bar{\alpha}}{\bar{\alpha}_o}\right)_{P=0} = \left[\frac{-C_{m_{\alpha,0}} \, q_o}{-C_{m_\alpha} \, q}\right]^{1/4} e^{1/2 \int_0^t P_1 V \, dt} \tag{38}$$

$$P_1 = -\frac{\rho A}{2m}\left(C_{L_\alpha} - \frac{C_{m_q}}{2\sigma_y^2}\right) \tag{39}$$

$$\frac{\bar{\alpha}}{\bar{\alpha}_o} = \left(\frac{\bar{\alpha}}{\bar{\alpha}_o}\right)_{P=0} \left[\frac{1 + \left(\frac{I_X P}{2 I_Y \omega_n}\right)^2}{1 + \left(\frac{I_X P}{2 I_Y \omega_n}\right)^2}\right]^{1/4} \left[\frac{(1+K)\, e^{\int_0^t \Delta\lambda\, dt}}{2} + \frac{(1-K)\, e^{-\int_0^t \Delta\lambda\, dt}}{2}\right] \tag{40}$$

$$\omega_n^2 = -\frac{C_{m_\alpha}\, q\, A\, d}{I_Y} \tag{41}$$

$$\Delta\lambda = \frac{\frac{I_X}{I_Y}\,\frac{P}{2}\,\frac{\rho A V}{m}\left[C_{L_\alpha} + \frac{C_{m_q}}{2\sigma_y^2}\right]}{4\left[\omega_n^2 + \left(\frac{I_X P}{2 I_Y}\right)^2\right]^{1/2}} \tag{42}$$

$$\text{Freq} = \omega_n/2\pi \tag{43}$$

5, Coefficients Calculations

$$C_D = C_X \cos\alpha + C_N \sin\alpha \tag{44}$$

$$C_m = C_N\left(\frac{X_{cg}}{d} - \frac{X_{cp}}{d}\right), \tag{45}$$

or

$$C_m = C_{m_{X_{cm}}} + C_N\left(\frac{X_{cg}}{d} - \frac{X_{cm}}{d}\right) \tag{46}$$

$$C_{L_\alpha} = \frac{(C_L)_{\alpha+\Delta\alpha} - (C_L)_\alpha}{\Delta\alpha} \tag{47}$$

where,

$$C_L = C_N \cos\alpha - C_X \sin\alpha \tag{48}$$

$$(C_N)_{\alpha>180} = -(C_N)_{180-(\alpha-180)} \tag{49}$$

$$(C_X)_{\alpha>180} = (C_X)_{180-(\alpha-180)} \tag{50}$$

$$(C_m)_{\alpha>180} = -(C_m)_{180-(\alpha-180)} \tag{51}$$

$$(X_{cp})_{\alpha>180} = (X_{cp})_{180-(\alpha-180)} \tag{52}$$

$$(C_{L_\alpha})_{\alpha>180} = (C_{L_\alpha})_{180-(\alpha-180)} \tag{53}$$

7. Convective Heating

a. Laminar

$$q_S = \frac{K_L}{(d/2)^{1/2}} \rho_a^{1/2} \left(\frac{V}{10^4}\right)^{b_L} \tag{54}$$

where,

$$K_L = (1.1 + 0.075M) \times 10^4 \times \left[\frac{d}{2V}\left(\frac{du}{ds}\right)_S\right]^{1/2} \tag{55}$$

$$b_L = 3.909 - 0.0229M \tag{56}$$

M = molecular weight

$\frac{d}{2V}\left(\frac{du}{ds}\right)_S$ = velocity gradient at stagnation point

b. Turbulent

$$q_T = K_T \times \rho_a^{0.8} \times \left(\frac{V}{10^4}\right)^{3.18} \tag{57}$$

where,

$$K_T = [540000/(S^*)^{0.2}]\ (THF) \tag{58}$$

S^* = distance from stagnation to sonic point at zero angle of attack

THF = turbulent heating factor

$$Re^* = \frac{\rho_a}{\mu^*}\left(\frac{\rho_S}{\rho_a}\right)\left(\frac{\rho^*}{\rho_S}\right) u^* S^* \tag{59}$$

where,

ρ_S/ρ_a = density ratio at stagnation point

μ^* = $f(T^*)$ from built-in viscosity table

$$\rho^*/\rho_S = \left(\frac{2}{\gamma + 1}\right)^{\frac{1}{\gamma - 1}} \tag{60}$$

$$u^* = \left(\frac{2H}{\rho_S/\rho_a}\right)^{1/2} \tag{61}$$

$$H = (HM/RT_o)\ 24.4522 \times 10^6/M \tag{62}$$

$$T^* = 2\ T_S/(\gamma + 1) \tag{63}$$

T_S = temperature at stagnation point

$$\gamma = \frac{(\rho_S/\rho_a) + 1}{(\rho_S/\rho_a) - 1} \tag{64}$$

$$HM/RT_o = \frac{V^2 M}{2RT_o} + \frac{M c_p T a}{RT_o} \tag{65}$$

8. Nonequilibrium Radiation Heating

$$\Delta_{NE} = \frac{K_{NE} \times 10^{-6}}{\rho_a \left(\frac{V}{10^4}\right)^{4.3}} \tag{66}$$

$$\Delta_p = \frac{0.23 \times 10^{-6}}{\rho_a \left(\frac{V}{10^4}\right)^{3.3}} \tag{67}$$

$\Delta > \Delta_{NE}$

$$q_{RNE} = q_E \left[1 - \frac{1}{2}\frac{\Delta_p}{\Delta} - \frac{1}{2}\frac{\Delta_{NE}}{\Delta} + \frac{I_{NE}}{I_E}\frac{\Delta_{NE}}{2\Delta}\right] \tag{68}$$

$\Delta_p < \Delta < \Delta_{NE}$

$$q_{RNE} = q_E \left[1 - \frac{1}{2}\frac{\Delta_p}{\Delta} - \frac{1}{2}\frac{\Delta_{NE}}{\Delta} + \frac{I_{NE}}{I_E}\frac{\Delta_{NE}}{2\Delta} - \frac{1}{2}\frac{(\Delta_{NE} - \Delta)^2}{(\Delta_{NE} - \Delta_p)\Delta}\left(\frac{I_{NE}}{I} - 1\right)\right] \tag{69}$$

$\Delta < \Delta_p$

$$q_{RNE} = q_E \frac{1}{2}\frac{I_{NE}}{I_E}\frac{\Delta}{\Delta_p} \tag{70}$$

$$q_E = \frac{I_E \Delta}{2} \tag{71}$$

$I_E (\epsilon_1, N_1, T) \rightarrow$ see Program 1883 (72)

9. Alternate Nonequilibrium Model

$$\frac{I_{NE}}{I_E} = \frac{\Delta}{\Delta_{NE}} \cdot \frac{DIRNE}{QE} \tag{73}$$

DIRNE (VIRNE) (74)

IV. IBM ROUTINES

A. PROGRAM FLOW

The program flow is illustrated in Figure 13.

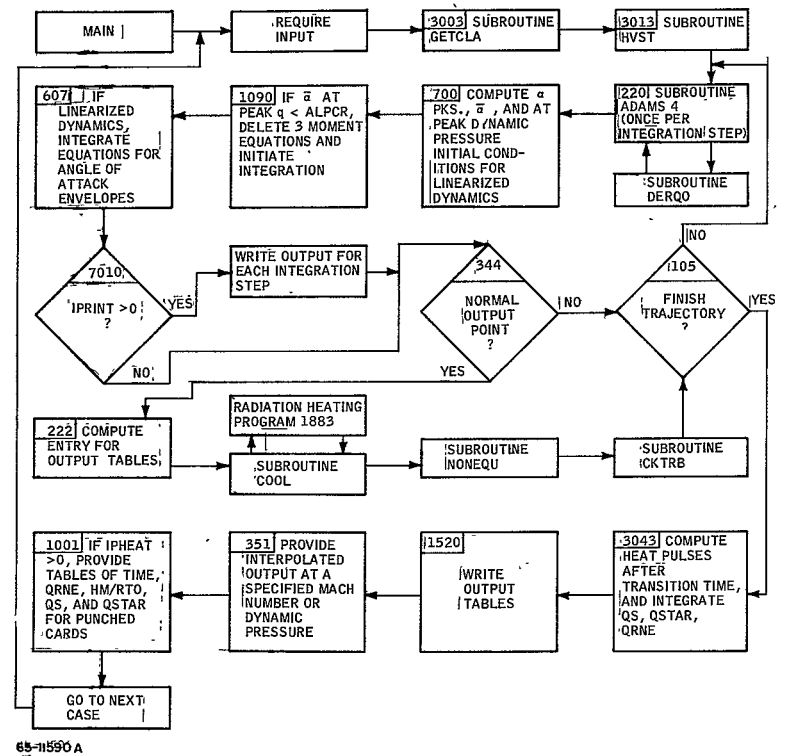

Figure 13 FLOW DIAGRAM OF PROGRAM 1880

B. CØMMØN STORAGE

Much data are transferred between the main program and the subroutine DERQ0 which computes the values at time (t) of the eight possible differential equations being integrated. Many other tables are placed in CØMMØN storage to prevent an overlap of the loading tables and the program when Program 1880 is placed in core. CØMMØN data are as follows:

DERQ0

Name	Quantity	Source	Input or Output	Description
ZST	Z_{ST}	Main	Input	Stratosphere altitude. Used to compute atmospheric properties.
ZTH	Z_{TH}	Main	Input	Thermosphere altitude. Used to compute atmospheric properties.
RHØ	ρ	DERQ0	Output	Ambient density at trajectory time t.
ZTBL		Program Input	Input	Altitude table for tabular atmosphere.
TETBL		Program Input	Input	Temperature table for tabular atmosphere.
RØTBL		Program Input	Input	Density table for tabular atmosphere.
CD	C_D	Program Input	Input	Drag coefficient as a function of Mach number XMACH.
XMACH		Program Input	Input	Mach number table used with CD above.
XL1	L_1	Program Input	Input	Troposhere temperature gradient. Used to compute atmospheric properties.
GSL	G_{SL}	Program	Input	Sea level gravitational acceleration. Used to compute atmospheric properties and trajectory.

DERQ0

Name	Quantity	Source	Input or Output	Description
CPØR	$CP/_R$	Main	Input	Specific heat divided by gas constant. Used to compute atmospheric properties.
TST	T_{ST}	Program Input	Input	Stratospheric temperature. Used to compute atmospheric properties.
TSL	T_{SL}	Program Input	Input	Sea level temperature. Used to compute atmospheric properties.
RH ØSL	ρ_{SL}	Program Input	Input	Sea level density. Used to compute atmospheric properties.
RSL	R_{SL}	Program Input	Input	Planet radius. Used to compute atmospheric properties and trajectory.
XM	M	Main	Input	Mean molecular weight of atmosphere. Used to compute atmospheric properties.
AR	R	Main	Input	Gas constant. Used to compute atmospheric properties.
XL2	L_{TH}	Program Input	Input	Thermosphere temperature gradient. Used to compute atmospheric properties.
MVE		Program Input	Input	If = 1, parametric atmosphere if = 2, tabular.
XLØ	L_O	Main	Input	Troposphere temperature gradient. Used to compute atmospheric properties.
CSUBD	C_D	DERQ0	Output	Drag coefficient at trajectory time t.
C_L	C_L			No current use.

DERQ0

Name	Quantity	Source	Input or Output	Description
XMAC	M	DERQ0	Output	Mach number at trajectory time t.
SMA	a	DERQ0	Output	Ambient speed of sound at trajectory time t.
A	A	Main	Input	Vehicle area. Used to compute trajectory.
SMM	m	Program Input	Input	Mass of vehicle. Used to compute trajectory.
TEMP	T	DERQ0	Output	Ambient temperature at trajectory time t.
RØBAR	$\bar{\rho}$	Main	Input	Stratosphere density used to compute atmospheric properties.
RHØTH	$\bar{\rho}_{TH}$	Main	Input	Thermosphere density Used to compute atmospheric properties.
TABAL		Program Input	Input	Angle-of-attack table. Used as independent variable table for coefficients as functions of α and M to compute trajectory.
CNFA	C_N	Program Input	Input	C_N table as function of α and M to compute trajectory.
XCPFA	X_{cp}	Program Input	Input	X_{CP} table as function of α and M to compute trajectory.
CMQFA	C_{mq}	Program Input	Input	C_{mq} tables as function of α and M to compute trajectory.
CLAFM	C_{L_α}	Program Input	Input	C_{L_α} table as function of M to compute trajectory.
CMQFM	C_{mq}	Program Input	Input	C_{mq} table as function of M to compute trajectory.

DERQ0

Name	Quantity	Source	Input or Output	Description
CMAFM	C_{m_α}	Program Input	Input	C_{m_α} table as function of M to compute trajectory.
XCGØD	XCG/D	Program Input	Input	XCG/D center of gravity. Used to compute trajectory.
ZIX	I_X	Program Input	Input	I_X moment of inertia. Used to compute trajectory.
ZIY	I_Y	Program Input	Input	I_Y moment of inertia. Used to compute trajectory.
D	d	Program Input	Input	Vehicle diameter. Used to compute trajectory.
NØEQD		Main	Input	Number of equations being integrated: 3 for particle trajectory; 8 for trajectory and dynamics.
ALDG	α'	DERQ0	Output	Angle of attack at trajectory time t.
P	P	Program Input	Input	Constant spin rate used to compute trajectory.
RTX	REY			Used to prevent loading table, program overlap.
HRT	HM/RT_o			Used to prevent loading table, program overlap.
QS	q_s			Used to prevent loading table, program overlap.
QT	q*			Used to prevent loading table, program overlap.
QR	q_R			Used to prevent loading table, program overlap.
TIME	t			Used to prevent loading table, program overlap.

DERQ0

Name	Quantity	Source	Input or Output	Description
XMBCH	M	Program Input	Input	Independent variable. Mach number table used to compute coefficients as a function of α and M for trajectory.
CXFA	C_X	Program Input	Input	C_X table as a function of α and M used to compute trajectory.
CLAFA	C_{L_α}	GETCLA	Input	C_{L_α} table as a function of α and M used to compute trajectory.
CMFA	C_m	Program Input	Input	C_M table as a function of α and M used to compute trajectory.
XØW	D/W			Drag force ratio.
ENØW	N/W			Normal force ratio.
XMAX		Main	Input	Largest value of XMBCH.
XMIN		Main	Input	Smallest value of XMBCH.
IXMAX		Main	Input	Index of XMAX in XMBCH.
IXMIN		Main	Input	Index of XMIN in XMBCH.
CMIN		Program Input	Input	If CMIN >O, use CMFA and CMCØD for C_M if CMIN $\leq$ O, use XCPØD for C_M.
CMCØD		Program Input	Input	Used to compute C_M for trajectory if CMIN > O.

C. SUBROUTINES

	Variable	CNFA, C_N coefficient table	CXFA, C_X coefficient table	TABAL, d independent variable table	CLAFA, C_{L_α} coefficient table
GETCLA	Subroutine Input or output	Input	Input	Input	Output
	SOURCE	Program Input	Program Input	Program Input	GETCLA

	Variable	NXG, Atmos table number	XØ, $Ø_2$ mole fraction	XN, N_2 mole fraction	XC, $CØ_2$ mole fraction
	Input or Output	Input	Input Program	Input Program	Input Program
COOL	SOURCE	MAIN	Input	Input	Input
XA, A mole fraction	IPRG, print sentionol	RHØ, ambient density	VY, Vehicle velocity	QR1G, total equilibrium radiation	ZNAMI, table of 7 specie names
Input	Input	Input	Input	Output	Input
Program Input	Program Input	DEREQ	ADM4RK	GETN	MAIN
ZNAM2, table of radiation source names	ENTØT, stagnation enthalpy	RØRZ density ratio	DELØRC, table of Δ/RC	TSSZ Stagnation Temperature	TIM, Trajectory time
Input	Input	Output	Input	Output	Input
MAIN	MAIN	HEAT	Program Input	HEAT	ADM4RK
TITBL, Zone 1 temperature table	T2TBL, Zone 2 temperature table	T3TBL, Zone 3 temperature table	HITBL, Zone 1 enthalpy table	H2TBL, Zone 2 enthalpy table	H3TBL, Zone 3 enthalpy table
Input	Input	Input	Input	Input	Input
HVST	HVST	HVST	HVST	HVST	HVST
DENR, table of density ratios	D, vehicle diameter	DELDG, Δ detachment distance			
Input	Input	Output			
Program Input	Program Input	HEAT			

	Variable	V, Velocity	RHØ, ambient density	XN, N_2 mole fraction	XØ, Ø2 mole fraction
HEAT	Subroutine Input or Output	Input	Input	Input	Input
	SØURCE	ADM4RK	DEREQ	Program Input	Program Input
XC, CO_2 mole fraction	XA, A mole fraction	NX atmosphere table numbers	P, Stagnation pressure	T, Stagnation temperature	Z, moles of gas mixture at T & P
Input	Input	Input	Output	Output	Output
Program Input	Program Input	MAIN	HEAT	HEAT	ZØNES
RHØST, density ratio ρ_s/ρ_∞	QSUM-total radiation heating	QI-component radiation heating	X-moles of species in mixture of T&P	HDHS dissociation energy—enthalpy	HRT, enthalpy
Output	Output	Output	Output	Output	Output
HEAT	GETN	GETN	ZØNES	FINDH	FINDH
DELØRC, table of Δ/RC	DUM-moles of O^+, N^+, C^+, e^- in Zone 2	ENTØT-stagnation enthalpy (HRT)	HITBL, Zone 1 enthalpy table	H2TBL Zone 2 enthalpy table	H3TBL Zone 3 enthalpy table
Input	Output	Input	Input	Input	Input
Program Input	ZØNES	MAIN	HVST	HVST	HVST
T1TBL, Zone 1 temperature table	T2TBL, Zone 2 temperature table	T3TBL, Zone 3 temperature table	DENR, table of density ratio	D, vehicle diameter	DEL, Δ detachment distance
Input	Input	Input	Input	Input	Output
HVST	HVST	HVST	Program Input	Program Input	HEAT

97<

CKTRB	Variable	RØRZ = Density ratio ρ_s/ρ_a	TSSZ stagnation temperature	TMPVS, temperature for viscosity	VISC, viscosity table
	Subroutine Input or Output	Input	Input	Input	Input
ENTØT, stagnation enthalpy	DUMREY constant to compute Reynolds No	RØ (I), ambient density	SST, S* to compute Reynolds No	REYS, local Reynolds No	
Input	Input	Input	Output	Output	
MAIN	MAIN	MAIN	MAIN	CKTRB	

Calling sequences for ADAMS4 and DERQ0 are described in the section of special routines

Calling sequences for HVST, GETN, ZONES, GETK, FINDT, FINDH, and GETQ are the same as for those routines in the 1883 program description.

NONEQU	Variable	DELDG, detachment distance	DSP, distance to peak nonequilibrium intensity	DNE nonequilibrium distance	XIRN, nonequilibrium intensity ratio
	Subrouting Input or Output	Input	Input	Input	Input
	Source	HEAT	MAIN	MAIN	Program Input
QR(I), Equilibrium radiation heating	QRNE (I) non-equilibrium radiation heating				
Input	Output				
GETN	NØNEQU				

1. Subroutine DERQ0

Purpose: DERQ0 computes the atmospheric properties for the altitude at each time step of the numerical integration of the trajectory and dynamics differential equations, and provides the values of the derivatives of the differential equations for the succeeding integration step.

Method: The values of the dependent variables of the integration are contained in the array X of the calling sequence, at time = TIM, and the derivatives are computed and stored in the array DERX. All other data are passed through CØMMØN. The quantities in each X are: Velocity (V), flight path angle (γ), altitude (Z), pitch rate (Q), yaw rate (R), and the Euler angles (ψ, θ, ϕ). .

Knowing the altitude at time TIM, DERQ0 first computes the atmosphere temperature TEMP and density RHØ corresponding to that altitude. It does this with tables (MVE = 2, Statements 10 and 12) or from a parametric representation (MVE = 1, Statements 20 to 70). By the execution of Statement 93 the Mach number and speed of sound (XMAC and SMA) are calculated, as well as the value of dz/dt.

After Statement 92 the number of equations (NOEQD) is tested, and if this is 8 the remaining trajectory and dynamics derivatives must be evaluated using coefficients that are functions of angle of attack and Mach number. If NØEQD = 3, only the two remaining particle trajectory derivatives (dv/dt, $d\gamma/dt$) are evaluated using a drag coefficient as a function of MACH number (XMACH) only, and the RETURN before Statement 99 returns control to ADAMS4 so that the integration may be continued. If all eight derivatives must be evaluated, transfer is made to Statement 99 and by Statement 1000 the angle of attack at time TIM is computed from the Euler angles. Statements from 1000 to 1019 compute the aerodynamic coefficients by double interpolation in angle of attack (through ARTLU and ALPHA) and Mach number. Tests are first made (before 1000 or before 1001), and if the Mach number is lower (higher) than the lowest (highest) value in XMBCH. In addition, for values of ALPHA above 180 a transform is made to the value of the coefficient in the range between 0 and 180. The values of the derivatives are computed between Statements 1019 and 9999.

2. Subroutine CØØL

Purpose: Subroutine CØØL accepts data from the trajectory calculation in such form as is suitable for the radiation heating calculation, initiates the heating calculation, and returns radiation and gas dynamic data to the main program. If IPRQRD is $\geq$ 1.0, CØØL also causes data to be printed out each time it is called.

Method: Subroutine CØØL is analogous to the main program of Program 1883 (see 1883 description). The program flow for 1880 described above contains the logical position of the subroutine and, in fact, the "radiation heating Program 1883" division reflects the logical flow of Program 1883 (call HEAT, and so forth). If the sentinel IPRQRD is ≥ 1.0, subroutine CØØL will provide the normal 1883 output each time it is called, along with the trajectory time for identification.

3. Subroutine NØNEQU

Purpose: To compute the value of the nonequilibrium radiation heating for each time recorded on the output tables.

Method: Immediately before NØNEQU is called for some TIME entry, the equilibrium radiation heating calculation (subroutine CØØL, et al) has provided the equilibrium radiation and the detachment distance (QR (I) and DELDG). Given the distance to peak nonequilibrium intensity and the nonequilibrium density (computed in the main program as DSP and DNE, plus the input factor IRNE, the nonequilibrium radiation is computed from one of three relations (Reference 1, p. 104. Equation (78)) which relation is used to compute QRNE at time TIM, depending on the relative magnitude of DELDG, DNE, and DSP.

4. Subroutine CKTRB

Purpose: Subroutine CKTRB computes the local Reynolds number at the sonic point each time the equilibrium radiation calculation is successfully performed during the trajectory.

Method: Using output from the equilibrium radiation calculation, density ratio, stagnation temperature, and stagnation enthalpy, plus the ambient density, viscosity (known as a function of temperature), and S* from SSØD in the program input, the Subroutine CKTRB evaluates the local Reynold's number at the sonic point from a straight-forward algebraic solution.

5. Subroutine HEAT

Purpose: See 1883 description

Method: The method used by HEAT in Program 1880 is the same as in 1883 with the following changes. HEAT no longer calls the subroutine HVST, but has the output from that subroutine given to it by subroutine CØØL, which receives it from the 1880 main program which calls HVST once for each trajectory. HEAT does not compute the stagnation enthalpy, but receives it via CØØL from the trajectory

calculation. Also the detachment distance is not supplied by direct input or the correlation in b/a and inverse density ratio, but from a direct correlation between detachment distance and density ratio supplied as program input (tables DELØRC and TABDR in the input).

6. Subroutine GETN

Purpose: See 1883 description

Method: Same as in 1883, but the effective emissivities and detachment distance are deleted from the program output.

Subroutines HVST, GETK, GETQ, FINDH, FINDT, and ZØNES are the same as in Program 1883.

7. Subroutine GETCLA

Purpose: GETCLA will compute a table of C_L from the input tables C_N and C_X.

Method: Subroutine GETCLA computes the coefficient C_{L_α} by a linear approximation of the derivatives which depend upon tables of C_N and C_X. A value of C_{L_α} is computed for each of 5 Mach numbers and 19 angles of attack in the loop ending at Statement 1005.

8. Subroutine INTRP

Purpose: To interpolate trajectory data at a specified Mach number or dynamic pressure, and print the results.

Method: Linear interpolation.

D. MAIN PROGRAM

Purpose: The purpose of the main program is to acquire input, provide for the integration of the trajectory and vehicle dynamics equations (done by ADAMS4), exercise suitable options during the course of the trajectory calculations (depending on the value of certain input quantities), provide for the calculation and storage of all quantities which appear in the output tables, and provide output from the calculation.

Method: To easily follow the logical flow of the main program, one must remember two facts. First, the integration of the trajectory equations is arranged under normal operating procedure so that ADAMS4 returns control to the main program after each integration step. The size of this time interval depends only upon the behavior of the differential

equations and the accuracy requirements. Second, since these time steps are usually rather small, to provide output for each step would be quite time consuming. Therefore, only some integration data appear on the output tables and the points selected depend upon the rates of change of physical quantities of interest to the user. For example, if the altitude is changing rapidly, finer resolution is shown on the output for the time span in which this occurs. All output points selected are stored on tables which are printed after the entire trajectory has been calculated.

The maximum number of lines of output is 150, and it is solely the responsibility of the problem submitter to assure (by judicious selection of values for VTST, GTST, ZTST, QTST, and DELMAC) that these tables are not exceeded. All statements before 500 either specify variables, or define preset input or tables. ZNAM1 and ZNAM2 are arrays of Hollerith names which define species and radiation contributors for the radiation heating block. The tables TMPVS and VISC define viscosity as a function of temperature. TBSUM is the sum of $O_2 + CO_2$ for each of the eleven atmospheric tables of enthalpy and temperature (see main description).

After Statement 500, sentinels are initialized for each case, and data is read in through the Namelist array INPUT. The values of the highest and lowest Mach numbers in the array XMBCH have been computed by Statement 3003, and subroutine GETCLA is called to provide a table of values for C_L for the tables of C_N and C_X. Following the call GETCLA, the modes of certain input variables are changed, the moments of inertia computed from the radii of gyration, S* computed, and by Statement 3018 the appropriate tables for the atmosphere being run have been selected by the calculation of NXG (i.e. the tables whose sum of O_2 and CO_2 mole fractions is closest to the sum of the input XO and XC). Call HVST obtains these enthalpy and temperature tables for use by the radiation heating calculation. Diagnostic tests are performed before Statement 3048 to assure that the sum of the mole fractions is $1. \pm .001$, and that $XN \geq .001$. By Statement 24, further initialization has been completed, constants computed for the theorized dynamic calculation, and the quantities which determine output points defined from the input. The statements immediately following 24 define atmospheric properties and constants for the computation of the convective heat pulses. The heat pulses which appear in the output tables are computed only at output points (not for every integration time step), since the pulses QS, QSTAR, and QRNE all depend upon the density ratio computed by the radiation heating calculation, and it is prohibitively expensive to compute the radiation for each integration step. However, the selection of an output point itself depends upon the rate of change of the stagnation point convective heating. For this reason an approximate

heat pulse is computed and integrated by the program so that output points may be selected. The quantities XKL, QS1, QS2, and SMQS are used for this pulse. Then the initial values for the eight differential equations are defined, along with other parameters used by the predictor-corrector integration routine ADAMS4.

The statements between 220, CALL ADAMS4 and the computed GØ TØ numbered 105 toward the end of the program form a logical loop completed for each time step of the trajectory calculation until the vehicles trajectory has been entirely computed (either until impact or t = TSTØP). Immediately after the enthalpy (ENTØT), velocity (VY), and dynamic pressure (DYNPR) are computed, the sentinel NITWIT (preset to 0 after Statement 500) is checked. If NITWIT is > 0, this means that the linearized dynamic calculations were not done because the angle-of-attack envelope at peak dynamic pressure was > ALPCR, and the five dynamics equations are to be integrated until impact unless the dynamic pressure becomes larger than a quantity proportional to CDRØP. When NITWIT > 0, this quantity is computed and tested against the dynamic pressure for each time step (Statement 367). If larger than the dynamic pressure, only the first three (particle trajectory) differential equations are integrated; all remaining angle-of-attack envelope values (ALENV) are set equal to the last angle-of-attack envelope computed (DØ615) and no further angles of attack are computed (ILATE= 1, 12BIG = 1).

At Statement 368, the current value of the dynamic pressure is tested against the value computed for the previous time step. If it is smaller, the last value of the dynamic pressure in the output tables (QD(I)) is taken as the peak dynamic pressure, and the values of all variables at TIME (I) are used to compute all quantities of interest at peak dynamic pressure, including initial values of the integrals and constants of interest in the linearized dynamic calculations (GM10, PHI10, PHI0GM, PSI10, TMIG1). ILATE, preset to 0, is set equal to 1 to delete any further testing for peak dynamic pressure.

Statements 601 to 605 complete the consideration of data for angle-of-attack calculation dependent upon the integration of the (last) five dynamics differential equations. Since only the value of the angle of attack at time (TIM) is known for each time step, additional calculations are necessary to compute the value of the angle-of-attack envelope at time t. The angle of attack at TIM is ALDG, and the previously computed value is AOLD. If the angle of attack has been increasing (IPK = 2), but the current ALDG < AØLD, then a peak is defined (PKNEW at TALNEW), and with a knowledge of the previously defined peak (PKØLD at TALØLD), an angle-of-attack

envelope value for some output point such that TALØLD $\leq$ TIME(JPAL)$\leq$ TALNEW may be computed by linear interpolation (Statement 805). Here, JPAL is the number of envelope values already computed +1. The statements between 3055 and 807 serve only to compute, as a function of angle of attack and Mach number, the coefficients necessary in the calculation of N/W (ENØW). If ILATE > 1 (first computation for angle of attack after peak dynamic pressure), the statements following 606 are executed to compute quantities for the linearized dynamics which depend on the angle-of-attack envelope at peak dynamic pressure. If this envelope value is less than the input ALPCR, the dynamics differential equations are deleted, the integration reinitialized (Statement 1090), and ISKIP (preset to 0) is set to 1. The ISKIP value deletes all consideration of the angle of attack from the dynamics differential equations by skipping the statements between 700 and 605. If ALPCR is too small (no linearized dynamic option), the eight differential equations are retained, ISKIP is set to 0, ILATE is set to 0, and NITWIT (see discussion of CDRØP above) is set to 1 (Statement 613). Statement 605 ends the angle-of-attack envelope portion, except for the linearized calculation.

If NPASS = 1, only the initial conditions of the integration have been computed, and the convective heat pulse used only for the determination of an output point is initialized (see the statements following 302). A transfer is made into the portion of the main program which generates the output tables (Statements 222 to 105), thus making the initial conditions the first line of the tabular program output. If NPASS = 2 for each time step, the integrals for the linearized dynamics and the output-determining heat pulse are integrated for each time step by the trapezoidal method (Statements 320 to 338). If I2BIG > 0, the linearized dynamic integrals are not computed since the sentinel indicates that the angle-of-attack envelope computed by the linearized method is unreasonably large. If ISKIP $\leq$ 0, the angle-of-attack envelope is being computed from the 5 dynamics differential equations, and the linearized dynamics integrals are not evaluated. The statements between 7010 and 7011 provide output for each time step (IPRINT $\geq$ 1).

After 7011 are ten tests used to select the time steps which appear in the output tables. The criteria for an output point are as follows: TIM = TZERØ (initial point), TIM$\geq$TSTØP (maximum value of independent variable TIM), X (3) $\leq$ ZSTØP (impact), Mach number $\leq$ 5 and the difference from the last output line (XMØ) $\geq$ DMK; only if the approximate heat pulse is greater than 1 Btu/ft^2-sec, do the following tests determine an output point, velocity difference from last output velocity $\geq$ VTEST, flight path angle (γ) difference from last output point $\geq$ GTEST, altitude difference from last output point $\geq$ ZTEST, approximate convective heat pulse integral difference from last output point $\geq$ QSTST. Statement 222 begins the calculation of the output table for TIME (I) = TIM, where I is the line number in the output tables.

The statements to 358 compute a Mach number index for use at the end of the program in interpolating data at some input value of Mach number (PRTMAC). QDY (I) is computed, and the statements to 1076 compute the interpolation index if a specified dynamic pressure (QDYPRT) is to be used instead of the Mach number. Next the γ, Z, ρ, t, and Mach tables are filled, plus the natural frequency (FRNAT). If the dynamics differential equations have been deleted at peak dynamic pressure (NITWIT = 0, ISKIP = 1), and the linearized integrals are not too large (TGMIG $\leq$ 15, I2BIG $\leq$ 0), the linearized dynamics integrals are evaluated and the angle-of-attack envelope and N/W based on that envelope value are computed by Statement 8005. I2BIG is set = 1 if the angle-of-attack envelope value from the linearized calculation is $\geq$ 90 degrees.

Next the Reynolds number RTX(I) and enthalpy HRT(I) are calculated, along with the nonequilibrium distance (DNE) and distance to peak nonequilibrium intensity (DSP). If the velocity is greater than VSTØPQ(VSD), the dynamic pressure is $\geq$ 1, and I = 1 (first output line) transfer is made to Statement 1999, for the equilibrium radiation heating calculation, the computation of the nonequilibrium radiation by subroutine NONEQU, the computation of the stagnation point convective heating (dependent upon the density ratio RØRZ computed with the radiation heating) and the call of CKTRB to see if the local Reynolds number REYS is > REYT. If REYS > REYT, transition has occurred, and the time for transition is stored as TIMTR. A transfer is made out of the radiation heating block to Statement 1997. If the velocity > VSTØPQ, dynamic pressure > 1, and I > 1, transfer is made to Statement 2002. If IQRGO = 1, TIMØD is calculated and IQRGØ = 2. The equilibrium and nonequilibrium radiation is computed by CØØL and NONEQU, the stagnation convective heating is calculated, and the same calculation done for REYS to check for transition. On occasion the radiation heating calculation fails to find a solution (NØ VALID SØLN. in output). This is recognized by the fact that the equilibrium radiation from CØØL, QRIG, has the value 0. When this happens, the index MINUS is incremented for each such case and as soon as a valid solution is given linear interpolations are done to compute the appropriate values of laminar and turbulent convective heating and equilibrium radiation heating (Statements 2007 to 2009). The nonequilibrium radiation is then based on the interpolated value of the equilibrium radiation when NØNEQU is called (after Statement 3052). These interpolations are thought reasonable because of the fact that experience indicates NØ VALID SØLN. generally occurs away from peak heating and in areas where the radiation heating is quite small. The interpolation requires the continuous updating of TIMØD for the interpolation (Statement 2009). If 149 lines of output have occurred, an attempt is made to eliminate all addition points from the output, except for impact (Statement 8001). This does not invariably work. Statement 105 ends the integration loop (see ADAMS4 description).

Except for the case DELTA-T TØØ/SMALL (Statement 130), the output tables from the entire trajectory are now printed with appropriate headings (Statements 1520 to 1660). First, however, all values of X/W (XØW (I)), and the values of laminar and, if applicable, turbulent heating, which occur after the last time CØØL was called, are computed in the loop ending 3043. The heating integrals are also computed in this loop by a trapezoidal approximation. The reason for the QSTAR and SQS calculation is that the restrictions V>VSTØPQ or dynamic pressure > 1 usually deletes the radiation heating before impact in order to save machine time calculating low radiation. The aerodynamic heating, however, depends upon the density ratio computed in the radiation block and hence the approximation is that this density ratio is constant between the last time radiation heating is computed and the impact time.

The values of the heating integrals are printed after Statement 400, and if interpolations are asked for at a specific Mach number (or dynamic pressure), the interpolations are completed and the answers written out in subroutine INTRP. The transition time is noted between 3060 and 3063, and indication of the deletion of the five dynamics differential equations is provided by Statement 3057 if such deletion occurred.

IF IPHEAT > 1.0 punched cards are provided on Tape 7 which includes tables of TIME, QS, QSTAR, HM/RTØ, and QRNE suitable for direct use in the heat shield calculation.

A transfer is then made to Statement 500, to begin the next case.

E. SIGNIFICANT EQUATIONS

1. MAIN

a. Molecular Weight

$$M = XM = 28 \cdot XN + 32 \cdot X\emptyset + 44 \cdot XC + 40 \cdot XA \qquad (24)$$

b. Specific Heat

$$CP/R = CP\emptyset R = 3.5\,(XN + X\emptyset) + 4 \cdot XC + 2.5 \cdot XA)/XM$$

c. Velocity Exponent for QS (I)

$$b_{LAM} = BLAM = 3.909 - 0.0299 \cdot XM$$

d. Stagnation Enthalpy

$$HM/RT_o = ENT\emptyset T = V^2/\left(64.4.778. \cdot \frac{1.987 \cdot 454 \cdot 273.16}{252 \cdot XM}\right) + \frac{XM \cdot CP\emptyset R}{273.16} \cdot TEMP \quad (298)$$

e. Dynamic Pressure

$$q_d = DYNPR = \frac{1}{2}\rho V^2 \quad (700)$$

f. Ballistic Coefficient

$M/C_D A$ = EMØCDA = SMM/(C_{DD} · A), C_{DD} = drag coefficient at peak q_d

g. Normal Force, when Coefficients = F (α, M)

N/W = ENØW (I) = $C_N \cdot Q_{DY}$ (I) · A/(32.16 · SMM), C_N from CNFA (3039)

Q_{DY} (I) = i^{th} dynamic pressure in output table

h. Normal Force when Coefficients = F (M)

N/W = ENØW (I) = (C_{LAD} + C_{DD}) · ALENV (I) · QDY(I) · A/(57.3 · 32.16 · SMM) (8007)

C_{LAD} and C_{DD} = C_{L_α} and C_D at same MACH number, (ALENV (I) = i^{th} angle-of-attack envelope in output table).

i. Natural Frequency

$$FREQ = FRNAT(I). = \frac{1}{2\pi}(-CMAD \cdot Q_{DY}(I) \cdot A \cdot D/ZIY)^{1/2} \quad (1076)$$

CMAD = C_{m_α} at same Mach number, ZIY = moment of inertia.

j. Ambient Reynolds Number

REY = RTX (I). RHØ · V (I) · D/VIS, VIS = viscosity at temperature TEMP (8005)

k. Axial Force

X/W = XØW (I) = $C_{DD} \cdot Q_{DY}$ (I) · A/(32.16 SMM) where $C_{DD} = C_D$ at same Mach number

l. Stagnation Point Convective Heating

$$Q_S = Q_S(I) = \left\{ \frac{VLG}{\frac{1}{2}D} \right\}^{1/2} \cdot (1.1 + 0.075 \quad XM) \quad 10^4 \cdot \left(\frac{V}{10^4} \right)^{BLAM} \cdot (RH\emptyset)^{ALAM} \quad (3041)$$

VLG = velocity gradient evaluated at same density ratio

m. Convective Sonic Point Heating

$$Q_{STAR} = Q_T(I) = Q_S(I) \text{ if laminar}$$

$$Q_{STAR} = \frac{5.4 \times 10^5 \, THF}{((SSTAR/D) \cdot D)^{0.2}} \cdot (RHO)^{ATRB} \left(\frac{V}{10^4} \right)^{BTRB} \text{ if turbulent} \quad (3054)$$

Linearized dynamics - no spin

n. Angle-of-Attack Envelope - no spin

$$ALENV(I) = \frac{ENVPQ \quad (-CMAPK \cdot PKDYN)^{1/4}}{((-CMAD \cdot Q_{DY}(I))^{1/4}} \cdot EXPF \, \frac{1}{2} \int_{t_o}^{t_i} \frac{\rho A}{2SMM} \left(-CLA + \frac{1}{2} \frac{CMQ}{SIGMA} \right) V \cdot dt$$

where ENVPQ, - CMAPK, and PKDYN are the angle-of-attack envelope, C_m, and $1/2 \, \rho V^2$ at peak dynamic pressure, CMAD and QDY (I) are the $C_m = f(M)$ and $1/2 \, \rho V^2$ at the ith time in the output table, and the exponential argument is integrated trapezodially with $CMQ = C_{m_q} = f(M)$

and $SIGMA = ZIY/SMMD^2$ t_o is the trajectory time at the beginning of the linearized calculation, t_i is the ith time in the output table, where $t_i > t_o$.

o. Linearized Dynamics, Spin Correction

Angle-of-attack envelope, spin:

p. Angle of Attack, Spin

$$\bar{\alpha} = ALENV(I) = \frac{1}{2} (\bar{\alpha})_{NO \, SPIN} [DUM \cdot EXPF \quad -\frac{1}{2} TGMIG \quad + DUM \quad EXPF \quad \frac{1}{2} TGMI \quad (8007)$$

$$TGMIG = \int_{t_o}^{t_1} \frac{-\pi \dfrac{RH\emptyset \cdot A \cdot V}{4SMM} \cdot \dfrac{ZIX}{ZIY} \cdot \left(CLA + \dfrac{CMQ}{2 \cdot SIGMA}\right)}{\left\{ \dfrac{RH\emptyset \cdot A \cdot V^2}{2 \cdot SMM \cdot D} \cdot \left(\dfrac{-CMA}{SIGMA}\right) + \dfrac{\pi^2}{4} \left(\dfrac{ZIX}{ZIY}\right)^2 \right\}^{1/2}} \, dt$$

$$DUM = \left\{ \left[\frac{RH\emptyset PK \cdot A \cdot VYPK^2}{2 \cdot SMM \cdot D} \cdot \left(\frac{-CMA}{SIGMA}\right) + \frac{\pi^2}{4} \left(\frac{ZIX}{ZIY}\right)^2 \right] \Bigg/ \frac{RH\emptyset \cdot A \cdot VYPK^2}{2 \cdot SMM \cdot D} \right] \left[\frac{RH\emptyset \cdot A \cdot V^2}{2 \cdot SMM \cdot D} \cdot \left(\frac{-CMAD}{SIGMA}\right) \Bigg/ \frac{RH\emptyset \cdot A \cdot V^2}{2 \cdot SMM \cdot D} \left(\frac{-CMAD}{SIGMA}\right) + \frac{\pi^2}{4} \left(\frac{ZIX}{ZIY}\right)^2 \right] \right\}^{\frac{1}{4}}$$

For the integral TGMIG, RHØ, V, CLA, CMQ, CMA, are the density, velocity, C_{L_α}, C_{m_q}, $C_{m_{\dot{\alpha}}}$ (evaluated as f(M)) for each time

$SIGMA = \dfrac{ZIY}{SMM \cdot D^2}$. For DUM, RHOPK, VYPK, CMA are the density

velocity, and $C_{m_{\dot{\alpha}}}$ evaluated at peak dynamic pressure. RHO, V, CMAD are these quantities evaluated at the ith time in the output table, $t_i > t_o$ where t_o is the trajectory time at the start of the linearized calculation.

q. Atmosphere Constants

$L_O = XLO = -XL1 \cdot GSL/CP$

$Z_{ST} = Z_{ST} = (TST - TSL)/XLO$

$\rho_{th} = RH\emptyset TH = PTH \cdot XM/(AR \cdot TST)$

$$\rho ST = RH\emptyset ST = \frac{\left(\dfrac{RH\emptyset SL \;\; TSL}{TST}\right)}{e^{\left\{ \dfrac{XM \;\; GSL}{AR \;\; (TSL - XLO \;\; RSL)} \left(\dfrac{ZST \;\; RSL}{RSL + ZST}\right) + XLO - RSL^2 \;\; ln\left(\left[\dfrac{RSL \;\; (TSL + XLO \;\; ZST)}{TSL \; (RSL + ZST)}\right] \dfrac{1}{TSL - XLO \;\; RSL}\right)\right\}}} \quad (24)$$

$$\bar{\rho} = ROBAR = RH\emptyset ST \cdot e^{\left[\dfrac{XM \cdot GSL \cdot RSL \cdot ZST}{AR \cdot TST \cdot (RSL + ZST)}\right]}$$

$$Z_{TH} = ZTH = \ln \frac{R\emptyset BAR}{RH\emptyset TH} \cdot \frac{AR \cdot TST \cdot RSL}{\left[XM \cdot GSL \cdot RSL - \ln\left(\frac{R\emptyset BAR}{RH\emptyset TH}\right) \cdot AR \quad TST\right]}$$

2. DERQ0

Atmosphere

$Z \leq ZST$

$T = TEMP = TSL + XLO \cdot Z$

$$\rho = RH\emptyset = \frac{\frac{RH\emptyset SL \quad TSL}{TEMP}}{e^{\left\{\frac{XM \quad GSL}{AR \quad (TSL - XLO \quad RSL)} \left(\frac{Z \quad RSL}{RSL + Z} + XLO \quad RSL^2 \ln\left[\frac{RSL\ (TSL + XLO \quad Z)}{TSL\ (RSL + Z)}\right] \frac{1}{TSL - XLO \quad RSL}\right)\right\}}} \qquad (32)$$

$ZST < Z \leq ZTH$

$T = TEMP = TST$

$$\rho = RH\emptyset = R\emptyset BAR\, e^{-\left[\frac{XM \cdot GSL \cdot RSL \cdot Z}{AR \cdot TST \cdot (RSL + Z)}\right]}$$

$Z > ZTH$

$T = TEMP = TSL + XL2\ (Z - ZTH)$

$$\rho = RH\emptyset = \frac{\frac{RH\emptyset TH \quad TST}{TEMP}}{e^{\left\{\frac{XM \quad GSL}{AR\ (TST - XL2 \quad (RSL + ZTH))} \left(\frac{Z - ZTH \quad RSL^2}{(RSL + Z)(RSL + ZTH)}\right) + XL2 \quad RSL^2 \ln\left[\frac{TST + XL2(Z - ZTH)}{(RSL + Z)(RSL + ZTH)}\right] \frac{1}{TST - XL2(RSL + ZTH)}\right\}}} \qquad (62)$$

$$a = SMA = \left[\frac{AR \quad TEMP \cdot CP\emptyset R}{XM \quad CP\emptyset R - 1.}\right]^{1/2}$$

$M = XMAC \quad V/SMA$

$V, \gamma, Z, Q, R, \psi, \theta, \phi = X(1-8)$ respectively

$$\frac{dZ}{dt} = DERX(3) = V \cdot \sin(\gamma)$$

$$\frac{dV}{dt} = DERX(1) = \frac{1}{SMM}\left[-CSUBD \ \frac{1}{2} \ RH\emptyset \ V^2 \ A - SMM \cdot GSL \left(\frac{RSL}{RSL+Z}\right)^2 \cdot \sin(\gamma)\right]$$

$CSUBD$ = Drag coeff. $f(M)$

$$\frac{d\gamma}{dt} = DERX(2) = \frac{1}{SMM \ V}\left[\frac{SMM \cdot \cos(\gamma) \ V^2}{RSL+Z} - SMM \ GSL\left(\frac{RSL}{RSL+Z}\right)^2 \cdot \cos(\gamma)\right]$$

} particle trajectory

particle trajectory, $C_D = f(M)$ only

$$\sin(\alpha) = SAL = \sin(\theta) \ \cos(\psi) \cdot \cos(\phi) + \sin(\psi) \cdot \sin(\phi)$$

$$\sin(\beta) = SBE = \sin(\psi) \ \cos(\phi) - \sin(\theta) \ \cos(\psi) \cdot \sin(\phi)$$

$$\sin(\alpha') = SALPHA = [\sin^2(\psi) + (\cos(\psi)\sin(\theta))^2]^{1/2}$$

$$\cos(\alpha') = CALPHA = \cos(\theta) \ \cos(\psi)$$

$$\alpha' = ALPHA = \tan^{-1}\left(\frac{SALPHA}{CALPHA}\right)$$

$$\frac{dV}{dt} = DERX(1) = \frac{dV}{dt} \text{ above, but } CSUBD = CX \ CALPHA + CN \ SALPHA,$$

CX and $CN = f(\alpha', M)$

$$\frac{d\gamma}{dt} = DERX(3) = \frac{1}{SMM \cdot V}\left[\frac{SMM \cdot \cos(\gamma) \ V^2}{RSL+Z} + CL \ \frac{\sin(\theta)}{\sin(\alpha')} \ \frac{A \cdot RH\emptyset \ V^2}{2} - SMM \ GSL\left(\frac{RSL}{RSL+Z}\right)^2 \cos(\gamma)\right]$$

} trajectory with vehicle dynamics from three moment equations

$$\frac{dQ}{dt} = DERX(4) = \left\{ \frac{1}{2} \; RH\phi \cdot V^2 \; A \cdot D \left[\frac{CM_{\cdot} \cdot SAL}{SALPHA} + \frac{D \cdot CMQ \cdot Q}{2 \cdot V} - \frac{Q \; ZIY \cdot CLA}{SMM \cdot V \cdot D} - CX \; ZCG\phi D \right] \right.$$

$$+ (ZIY - ZIX) \; P \cdot R + SPINER \; SBE - P \cdot ZIX \; GD\phi TT \; .$$

$$\left. [\sin(\psi) \; \sin(\theta) \cos(\phi) - \cos(\psi) \cdot \sin(\phi)] \right\} \cdot \left(\frac{1}{ZIY} \right)$$

$$\frac{dR}{dt} = DERX(5) = \left\{ \frac{1}{2} RH\emptyset \cdot V^2 \cdot A \cdot D \left[\frac{CM \cdot SBE}{SALPHA} + \frac{D \; CMQ \; R}{2 \cdot V} - \frac{R \cdot ZIY \cdot CLA}{SMM \cdot V \; D} \right] \right.$$

$$+ (ZIX - ZIY) \cdot P \; Q - SPINER \cdot SAL + P \cdot ZIX \cdot GD\emptyset IT \; .$$

$$\left. [\cos(\psi) \; \cos(\phi) + \sin(\psi) \; \sin(\theta) \sin(\phi)] \right\} \; \frac{1}{ZIY}$$

where,

$$SPINER = \frac{-P \cdot ZIX \; RH\emptyset \; V \; A \cdot [CN \cdot CALPHA - CX \cdot SALPHA]}{2 \cdot SMM \cdot SALPHA} \qquad (8001)$$

and,

$$GD\emptyset TT = - \frac{GSL}{V} \cdot \left(\frac{RSL}{RSL + Z} \right)^2 \cdot \cos(\gamma)$$

$$\frac{d\psi}{dt} = DERX(6) = \frac{R \cdot \cos(\phi) + Q \cdot \sin(\phi)}{\cos(\theta)}$$

$$\frac{d\theta}{dt} = DERX(7) = Q \; \cos(\phi) - R \cdot \sin(\phi)$$

$$\frac{d\phi}{dt} = DERX(8) = P + DERX(6) \cdot \sin(\theta)$$

3. C$\emptyset\emptyset$L - (No Significant Equations)

4. N$\emptyset$NEQU

DELDG < DSP

$$QRNE = \frac{1}{2} \cdot QR \cdot XIRN \left(\frac{DELDG}{DSP} \right) .$$

DSP $\leq$ DELDG $\leq$ DNE

$$QRNE = QR\left(1-\frac{1}{2}\frac{DSP}{DELDG}-\frac{1}{2}\frac{DNE}{DELDG}+XIRN\frac{DNE}{2\ DELDG}-\frac{1}{2}\frac{1}{DELDG}\left(\frac{(DNE-DELDG)^2}{(DNE-DSP)}\right)(XIRN-1.)\right) \quad (3)$$

DNE < DELDG

$$QRNE = QR\left(1-\frac{1}{2}\frac{DSP}{DELDG}-\frac{1}{2}\frac{DNE}{DELDG}+XIRN\frac{DNE}{2\ DELDG}\right) \quad (4)$$

5. CKTRB

$$REYS = \frac{R\emptyset}{VIS}\cdot R\emptyset RZ\cdot R\emptyset S\emptyset R\emptyset\ SST\cdot\left(\frac{2\ ENT\emptyset T}{R\emptyset RZ}\frac{24}{XM}\frac{4522}{}\frac{10^6}{}\right)^{1/2}$$

$R\emptyset$ = ambient density, $R\emptyset RZ$ from radiation calculation, SSTOS* from input,

$ENT\emptyset T$ = stagnation enthalpy, XM = molecular weight.

γ = GAMMA = $(R\emptyset RZ + 1)/(R\emptyset RZ - 1)$

$$\rho_S/\rho = R\emptyset S\emptyset R\emptyset = \left(\frac{2}{GAMMA + 1}\right)^{1/GAMMA - 1}$$

$$VIS = \text{viscosity at temperature } T^* = TSTR = \left(\frac{2}{GAMMA + 1}\right)\cdot TSSZ,\ TSSZ = \text{stagnation temperature}$$

GETCLA

$$C_{L_\alpha}(\alpha, M) = 5.73\{2\ C_L(\alpha + 10, M) - \frac{3}{2}C_L(\alpha, M) - \frac{1}{2}C_L(\alpha + 20, M)\} \quad (1007)$$

$$C_L = CN\cdot\cos(\alpha) - CX\sin(\alpha)$$

6. HEAT

Same as 1883, but inverse density ratio, b/a correlation for detachment distance replaced by (input) detachment distancedensity ratio correlation in table look-up after Statement 502. GETH, HVST, GETK, GETΩ, FINDH, FINDT, ZØNES - Same as 1883

V. REFERENCES

1. RAD, Mars Venus Capsule Parameter Study, Vol. I, Avco/RAD TR-64-1 JPL Contract 950626 (21 March 1964).

2. Detra, R. W., and H. Hidalgo, Generalized Heat Transfer Formulae and Graphs, Avco Everett RR72 (March 1960).

3. Collins, D. J., Convective Heat Transfer in Planetary Atmospheres, JPL TR No. 32-629 (1 July 1964).

4. Sones, P., Laminar and Turbulent Convective Heating on Conical bodies in Planetary Atmospheres, Avco/RAD TM-64-68 (January 1965).

5. Thomas, G., and G. W. Menard, Experimental Measurements of Non-equilibrium and Equilibrium Radiation from Planetary Atmospheres, AIAA Entry Technology Conference, American Institute of Aeronautics and Astronautics, pp. 170-185, New York (1964).

6. Arnold, J. O., V. H. Reis, and H. T. Woodward, Theoretical and Experimental Studies of Equilibrium, and Nonequilibrium Radiation of Bodies Entering Postulated Martian and Venusian Atmospheres at High Speeds, AIAA paper No. 65-116, AIAA 2nd Aerospace Science Meeting, N. Y. (25 to 27 January 1965).

7. Haurlan, P. N., private communication, Jet Propulsion Lab, JPL Contract 95086 (8 May 1964).

8. Levin, G. M., E. D. Evans, and V. Stevens, NASA Engineering Models of the Mars atmosphere for Entry Vehicle Design, NASA TN D-2525 (November 1964).

9. Vinokur, M., Hypersonic Flow around Bodies of Revolution whose Shock Waves are Generated by Conic Sections, IMSD, TR IMSD - 288139, General Research in Flight Sciences Vol. I, Part I, Fluid Mechanics, January 1959 to 1960).

10. Kaattari, G. E., Shock Envelopes of Blunt Bodies at Large Angles of Attack NASA TND-1980 (December 1963).

11. Hayes, W. D., and R. F. Probstein, Hypersonic Flow Theory, Academic Press, N. Y. (1959).

12. Traugott, S. C., An Approximate Solution of the Direct Supersonic Blunt Body Problem for Arbitrary Axisymmetric Shapes, JAS, 27, No. 5 pp. 361-370 (May 1960).

13. Jos, J. M., Transport Properties of Nitrogen, Hydrogen, Oxygen and Air to 30,000°K, Avco/RAD-TM-63-7 (March 1963).

14. Teare, J. D., S. Georgiev, and R. A. Allen, Radiation from Nonequilibrium Shock Fronts, Avco Everett RR112 (October 1961).

PROGRAM 1881

ILLUSTRATIONS

Figure 1 Vehicle Shape Parameters 2

2 Tension Shell and General Shape Geometries 3

3 Coordinate System for Calculation Model 4

4 Radius of Gyration Model 6

5 Plot of Vehicle Coordinates 16

6 Block Diagram of Program 1881 24

7 Flow Diagram of Program 1881 30

TABLES

Table I Tension Shell Check 9

[illegible]

AERODYNAMIC COEFFICIENTS PROGRAM (1881)

CONTENTS

I. Introduction 1

A. General Description 1
B. Calculation Model 1
C. Program Limitations 8

II. Usage 10

A. Input Definitions 10
B. Input Procedures 12
C. Output Definitions 14
D. Sample Problem 15

III. Computations 24

A. Block Diagram 24
B. Symbols 25
C. Equations 26

IV. IBM Routines 30

A. Program Flow 30
B. Subroutines 31
C. Significant Equations 34

V. References 39

VI. Bibliography 40

A. Force and Moment 40
B. Dynamic Stability 40

I. INTRODUCTION

A. GENERAL DESCRIPTION

This program computes the aerodynamic coefficients of axisymmetric shapes as a function of angle of attack utilizing impact (Newtonian) theory. In addition, radii of gyration are computed based on uniform densities forward and rearward of the specified center-of-gravity location. The general inputs required include:

1. Shape geometry,
2. Mass and center-of-gravity location, and
3. Desired angle of attack range.

Option is provided for determining the center-of-gravity location based on specified minimum values of the static margin and static moment coefficient derivative.

Configurations possible are bodies of revolution containing up to 10 sections of various geometries, including spherical segments, cones, tori, cylinders, and an optional section which may be a tension shape or a general shape input by coordinates. A typical shape containing 10 basic sections is illustrated in Figure 1. Figure 2 shows the alternate geometry for the tension shell and the general shape.

The program output includes the axial, drag, lift, and normal force coefficients, the static and pitch damping moment coefficients, the lift curve slope, and the center of pressure. The aerodynamic coefficient data generated are sufficient to facilitate the inputs to Program 1880. The lift curve slope is utilized in Program 1880, but it is not necessary as an input to that program as it is computed from the axial and normal force coefficients.

B. CALCULATION MODEL

1. Newtonian Coefficients

Using the coordinate system shown in Figure 3, consider an arbitrary surface in three dimensional space ($g = g(x, y, z) = 0$) which is continuous in the first derivative in the region of interest. The unit vector which is normal to the surface at any point, P, and which is positive into the surface is given by

$$\bar{n} = - \bar{\nabla} g / |\bar{\nabla} g| .$$

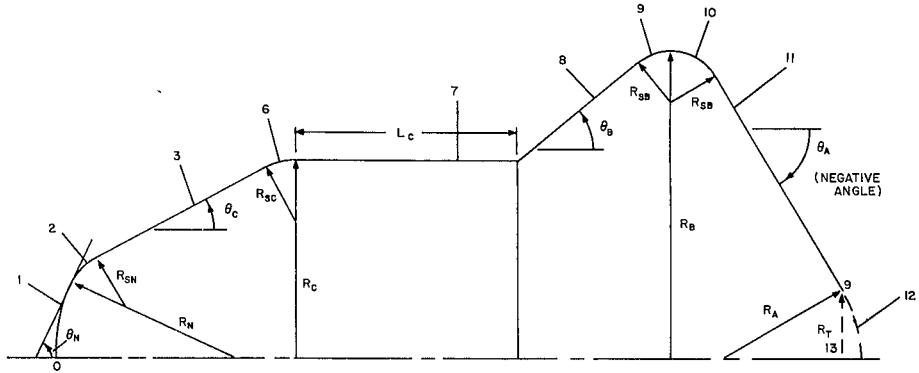

SECTION

1	NOSE SPHERE
2	R_{SN} TORUS
3	CONE (SEE FIGURE 2 FOR ADDITIONAL OPTIONS)
6	R_{SC} TORUS
7	CYLINDER
8	FLARE
9	FORE R_{SB} TORUS
10	AFT R_{SB} TORUS
11	AFT CONE
12	AFT SPHERE (R_A)
13	BASE (R_T)

85 1162 1

Figure 1 VEHICLE SHAPE PARAMETERS

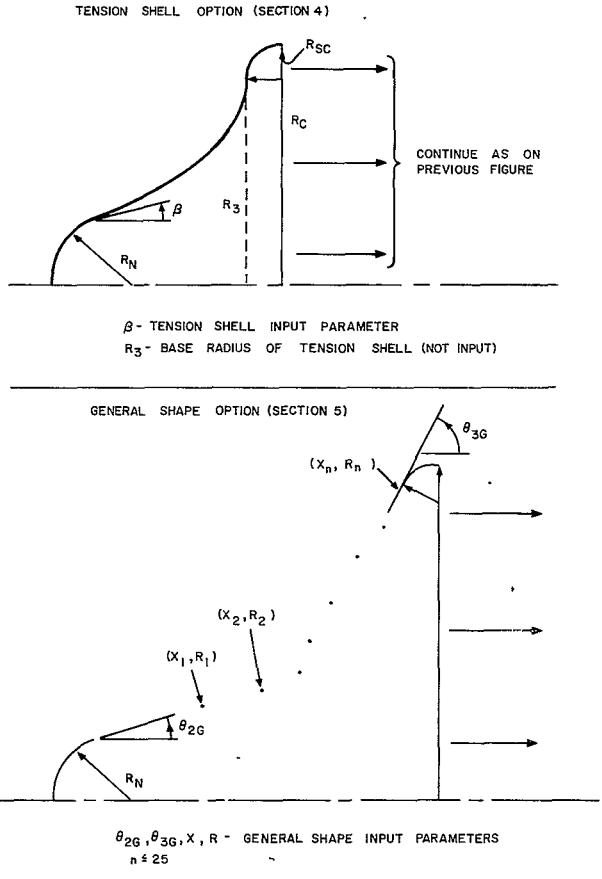

Figure 2 TENSION SHELL AND GENERAL SHAPE GEOMETRIES

Denote the component of the relative wind vector, $\bar{V}$ that lies along $\bar{n}$ as $\bar{V}_n$, the normal velocity vector. Hence,

$$\bar{V}_n = (\bar{V} \cdot \bar{n})\,\bar{n}.$$

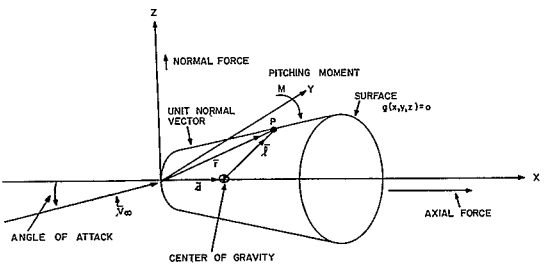

Figure 3 COORDINATE SYSTEM FOR CALCULATION MODEL

The Newtonian pressure approximation, used herein is then given by,

$$C_p = 2\left(\frac{|\bar{V}_n|}{|\bar{V}_\infty|}\right)^2 = 2\left(\frac{\bar{V}}{V} \cdot \bar{n}\right)^2;$$

where,

$$V = |\bar{V}_\infty|.$$

Defining $d\bar{C}_F$ as the element of the vector force coefficient acting normal to the surface at point P and $\bar{C}_F$ as the sum of all such elements.

$$d\bar{C}_F = \frac{C_p\, d\bar{S}}{A}, \quad \text{(A is the reference area.)}$$

$$\bar{C}_F = \frac{1}{A} \iint_S C_p\, d\bar{S} = \frac{2}{A} \iint_S \left(\frac{\bar{V}}{V} \cdot \bar{n}\right)^2 d\bar{S},$$

and, inasmuch as

$$d\bar{S} = \bar{n}dS,$$

$$\bar{C}_F = \frac{2}{A} \iint_S \left(\frac{\bar{V}}{V} \cdot \bar{n}\right)^2 \bar{n}dS .$$

It follows that the aerodynamic normal and axial force coefficients are found from:

$C_X = \bar{i} \cdot \bar{C}_F$, and

$C_N = \bar{k} \cdot \bar{C}_F$, respectively.

We define a position vector $\bar{r}$ as the vector extending from the origin to the point P. The moment vector arm, $\bar{l}$ is defined as that vector extending from the center of gravity of the vehicle to the point P. Thus,

$$\bar{l} = \bar{r} - \bar{d},$$

where $\bar{d}$ is the vector position of the center of gravity.

The differential moment about the center of gravity is found from:

$$d\bar{C}_M = \frac{\bar{l} \times d\bar{C}_F}{D} = \frac{\bar{l} \times C_p d\bar{S}}{AD} = \frac{C_p}{AD} \bar{l} \times d\bar{S} .$$

Integrating,

$$\bar{C}_M = \frac{2}{AD} \oiint_S \left(\frac{\bar{V}}{V} \cdot \bar{n}\right)^2 \bar{l} \times d\bar{S},$$

which may be evaluated as

$$\bar{C}_M = \frac{2}{AD} \oiint_S \left(\frac{\bar{V}}{V} \cdot \bar{n}\right)^2 (\bar{l} \times \bar{n})\, dS.$$

The aerodynamic pitching moment coefficient is found from:

$$C_m = \bar{j} \cdot \bar{C}_M$$

123

The velocity at point P consists of two parts, one part from the velocity of the vehicle and one part from the rotation of the vehicle about its center of gravity. Hence,

$$\bar{V} = \bar{V}_{\infty} - \bar{\omega} \times \bar{l} .$$

where $\bar{\omega}$ is the total vector angular rate of the body about its center of gravity.

Developed expressions for the forces and moments on conic section are readily available, e.g., see References 1 through 3.

The computer program treats all sections, except the spherical nosecap section, as consisting of a series of conical frustra. The effects of shadowing of the incident flow are included to ensure that the local pressure coefficient is never less than zero (negative).

2. Radii of Gyration

A simplified method for estimating the radii of gyration is included in the program by considering the vehicle to be of uniform density fore and aft of the center of gravity as depicted in Figure 4. Specifying the desired center-of-gravity location and the total vehicle mass, then by elementary volume considerations, the relative densities fore and aft of the center of gravity can be determined and then the pitch and roll radii of gyration can be computed.

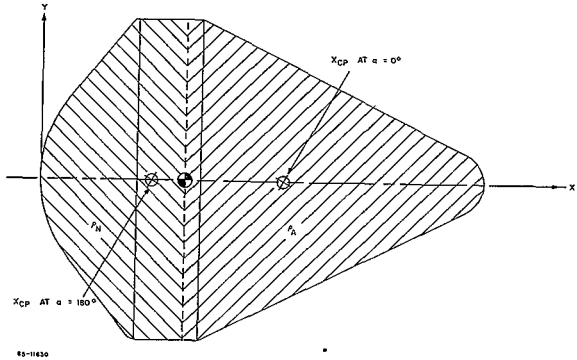

Figure 4 RADIUS OF GYRATION MODEL

3. Center of Pressure

The integration of the pressure forces over the complete surface of the vehicle yields the component forces on the vehicle and the line of action of the resultant force. Location of the center of gravity on the line of action eliminates any moments on the body arising due to aerodynamic forces, in which case the body is neutrally stable. The intercept of the line of action and the body longitudinal axis is designated as the center of pressure. Restricting the forces and moments to the static values, i.e., $\overline{\omega} = 0$, and with the center of gravity on the axis, the center of pressure as given in the output (XCP) is then defined as

$$\frac{X_{CP}}{D} = \frac{-(C_m)_o}{C_N}$$

where $(C_m)_o$ is the pitching moment evaluated about the nose of the vehicle At zero angle of attack,

$$\frac{X_{CP}}{D} = \lim_{\alpha \to o} \frac{(-C_m)_o}{C_N} = \frac{-C_{m_\alpha}}{C_{N_\alpha}} .$$

The reference length (D) is taken as equal to ($2 R_c$) throughout all the programs.

4 Moment Transfer

The center of pressure is independent of the center-of-gravity location but the moment coefficients must be modified if the center-of-gravity location is changed. Program 1880 provides for automatic static moment transfer, however, to transfer the damping moment coefficient, Program 1881 must be rerun for the new center-of-gravity position.

5. Pitch Damping Moment Coefficient

The pitch damping moment coefficient C_{m_q} is based on the normalized pitch rate qD/2V and is evaluated as $\left(\frac{qD}{2V}\right) \to 0$, i.e.,

$$C_{m_q} = \lim_{\left(\frac{qD}{2V}\right) \to 0} \frac{\partial C_m}{\partial \left(\frac{qD}{2V}\right)} .$$

C. PROGRAM LIMITATIONS

Program limitations are listed below:

1. Coefficients are based on the Newtonian pressure distribution, with the assumption that each section of the body has self-shadowing, but does not cast shadows on other sections.

2. Radii of gyration are based on uniform densities fore and aft of the center of gravity, the ratio of these densities being determined by the specified center-of-gravity location.

3. The effect of an off-axis center-of-gravity location can be accounted for in the coefficient calculation, but is not reflected in the radii of gyration.

4. Configurations are limited to axisymmetric shapes composed of spherical segments, cones, cylinders, tori, and an optional section which may be a tension shell or a general shape specified by up to 25 consecutive points in rectangular coordinates.

5. The Newtonian flow approximation assumes that the normal component of momentum is lost, while the tangential component is unchanged. All viscous forces and base pressures are neglected.

Comparisons have been made[1] between Newtonian predictions and hypersonic experimental aerodynamic characteristics for various sharp and blunt bodies of revolution.

In general, the theory was found to agree quite well with experimental results for sharp nose cones and for configurations having large blunted noses and steep surface slopes. However, agreement between theory and experiment generally is poor for the more slender ($\theta_c < 20$ degrees) slightly blunted conic bodies. Real flow phenomena, such as viscous effects, sharp corner effects, gas composition, gas kinetics, and heat transfer are all neglected by Newtonian theory and may, in some cases, have a sizable effect on the aerodynamic characteristics of the configuration and the adequacy of the theoretical predictions.

The agreement between theory and experiment can be improved by using the actual stagnation pressure coefficient behind the normal shock rather than the Newtonian value of two (2). The stagnation pressure coefficient can be

estimated by the following relation:

$$C_p = \frac{\gamma + 3}{\gamma + 1}\left[1 - \frac{2}{\gamma + 3}\quad\frac{1}{M^2_a}\right]$$

where γ is the ratio of specific heats (C_p/C_V).

6. The tension shell equations contained in Program 1881 are derived in Reference 4, and correspond to the case of zero hoop stress and a Newtonian pressure distribution. A comparison of the numerical integration results for the shape coordinates with the results of Reference 4 are given in Table I below.

TABLE I

TENSION SHELL CHECK

Shape		Length/Base Radius	
A^2	β	Ref. 4	1881*
0.5	62.50	0.343	0.343
1.2	33.50	0.939	0.943
1.6	22.835	1.413	1.417

*NDIV = 20.0

127

II. USAGE

A. INPUT DEFINITIONS

Name	Preset Value	Symbol	Parameter	Units
A1, A1L A2, A2L A3, A3L	0.,___ 0.,___ 0.,___		First and last values of angle of attack for each range of printout, these are all used only when the printout requirements differ for each range of angle of attack.	degrees
BETA	0.	β	Initial angle for third section in case of tension shell.	degrees
CASE			Identification number for case.	
CMAG(1)	0.	$C_{m_{\alpha 0}}$	Minimum pitching moment derivative at α = 0 degrees.	per radian
CMAG(2)	0.	$C_{m_{\alpha\ 180}}$	Minimum pitching moment derivative at α = 180 degrees.	per radian
DA1 DA2 DA3	0. 0. 0.		Intervals of angle of attack for which printout is desired; three ranges can be requested if data are needed more finely over a specific angle of attack range. Hence, the interval of printout is specified jointly with the range of angle of attack for which the printout frequency is desired.	degrees
DATE			Date identification number.	
DERDEL	.005		Interval of independent variable used to evaluate derivatives.	
GSØ	0.		This symbol is input 1.0 when the third section is a general shape; otherwise, need not be input.	

LC	0.	L_C	Length of cylinder	feet
MASS	0.	m	Mass of vehicle	slugs
M2 M4 M7 M8 M10	10 10 10 10 10		Number of straight-line segments into which the second, fourth, seventh, eighth, and tenth sections (curved sections) are to be divided for computational purposes.	
MEMØ			Identification number for computer run.	
NDIV	20		Increments of radius for which points are determined on tension shell.	
NPGSØ	0.		Number of input points when third section is a general shape (includes last point but omits first point; max 25 points).	
RA	0.	R_A	Aft body radius.	feet
RB	0.	R_B	Flare radius.	feet
RC	0.	R_C	Cylinder radius.	feet
RINP		r	Ordinates of input points in case of general shape (third section).	
RN	0.	RN	Nose radius.	feet
RSB	0.	R_{SB}	Toroidal radius (adjacent to flare cone).	feet
RSC	0.	R_{SC}	Toroidal radius (adjacent to cone).	feet

RSN	0.	R_{SN}	Toroidal radius (adjacent to nose).	feet
RT	0.	R_T	Aft cone base radius.	feet
SM	0.	SM	Minimum static margin at zero angle of attack.	feet
TH2G	0.		Initial angle when third section is a general shape.	degrees
TH3G	0.		Final angle when third section is a general shape.	degrees
THA	0.	θ_A	Aft cone angle.	degrees
THB	0.	θ_B	Flare section angle.	degrees
THC	0.	θ_C	Cone angle.	degrees
THN	0.	θ_N	Complement of nose angle.	degrees
XCG	0.	X_{CG}	Center of gravity position measured from nose.	feet
XINP	0.	x	Abcissas of input points in case of general shape (third section).	
ZCG	0.	Z_{CG}	Center of gravity position for cases where center of gravity is not on the axis	feet

B. INPUT PROCEDURES

Input procedures are listed below

1. R_c must always be specified. Aerodynamic coefficients are based on the reference length, $D = 2R_c$

2. Contour angles (θ) are measured relative to free stream, progressing aft of the nose. Positive values indicate increasing body radius, negative values, decreasing radius (e.g., θ_A is negative).

3 Sections may be omitted provided the starting point of each section is compatible with the final point of the previous section. The first and last points on the body must be on the axis.

4. If several cases are run on a single memo, only changed inputs need be specified (inputs which are not repeated must be set = 0)

5. The tension shell option is specified by inputing RN, BETA, RC, and RSC the defining parameters of the tension shell as shown in Figure 2.

6. In the general shape option (GSØ = 1.0), up to 25 points may be specified along the desired contour. In addition, the initial slope, TH2G (which defines the final point on the preceding arc) and the final slope, TH3G, must be specified.

7. The center of mass may optionally be determined by specifying restraints on the stability at 0- and 180-degree angles of attack. The program checks the computed XCG to ensure a single, stable trim point from 0- to 180-degree angles of attack. This option is activated by specifying XCG = 0, and inputting the restraints on SM, CMAG (1), and CMAG (2)

8. The length and mass units of inputs called for in the definitions are feet and slugs. However, any consistent system of units may be employed with corresponding changes in the units of the outputs.

9. For shapes with flat bases, a value of R_T must be specified if θ_A = -90.

10. An input form is provided on page 17 for the user. All the information shown is keypunched, provided the variable is specified. All numerical values have decimal points.

11. A brief bibliography of experimental measurements of aerodynamic coefficients is provided at the end of the text. These data can be used to improve the theoretical values obtained from Program 1881 where applicable.

C. OUTPUT DEFINITIONS

External Name	Internal Name	Symbol	Parameter	Units
ALPHA	ALPHA		Angle of attack.	degrees
CD	CD(1)	C_D	Drag coefficient as a function of angle of attack.	
CL	CL(1)	C_L	Lift coefficients as a function of angle of attack.	
$CL/_{CD}$	CL(1)/CD(1)	$CL/_{CD}$	Lift/Drag ratio as a function of angle of attack.	
CLA	CLA	C_{L_α}	Derivative of lift coefficient	per radian
CM	CM1	C_m	Pitching moment coefficient as a function of angle of attack.	
CMQ	CMQ	C_{m_q}	Damping coefficient.	per radian
CN	CN1	C_N	Coefficient of normal force as a function of angle of attack	
CX	CX1	C_X	Coefficient of axial force as a function of angle of attack.	
R	R	r	Ordinates of all points computed along the body surface.	feet
RGX/D	RGXDD		Radius of gyration about roll axis as a fraction of diameter	
RGY/D	RGYDD		Radius of gyration about pitch axis as a fraction of diameter.	
RHØA	RHØA	ρ_A	Density of vehicle aft of center-of-gravity position.	$slug/ft^3$

RHØN	RHØN	ρ_N	Density of vehicle forward of center-of-gravity position.	slug/ft^3
X	X	x	Abcissas of all points computed along the body surface.	feet
XCG	GX		Center-of-gravity position measured from nose.	feet
XCG/D	XCGDD	X_{CG}/D	Center-of-gravity distance as a fraction of capsule diameter.	
XCP/D	XCPDD	X_{CP}/D	Center-of-pressure distance as a fraction of capsule diameter.	

D. SAMPLE PROBLEM

1. Statement of Problem

Determine the Newtonian coefficients and estimated radii of gyration for a blunt cone configuration. The vehicle parameters, range of angle of attack, and XCG location are to be prescribed as input. The final plot of the configuration, as performed automatically, is shown in Figure 5.

2. Computer Input Form

The computer input form containing all the necessary input data to be keypunched is shown on page 18. All the input on this form is written with decimals.

3. Output

The output is given on page 19. The data keypunched is shown in the output and should be verified with the input form. An array of vehicle coordinates (X, R) are given which are useful for drawing the configuration; the first coordinates given correspond to the last point on the nose cap, which is spherical.

The coefficient data has two rows for each angle of attack; the first row corresponds to the XCG at the nose and the second row provides the moment data for the XCG specified. Following the coefficient data, are the densities fore and aft of the XCG necessary to yield the desired XCG location, and also the desired radii of gyration are given. A plot of the vehicle coordinates can be obtained, as shown on page 16 ; a Stromberg Carlson 4020 plotter was used for this purpose.

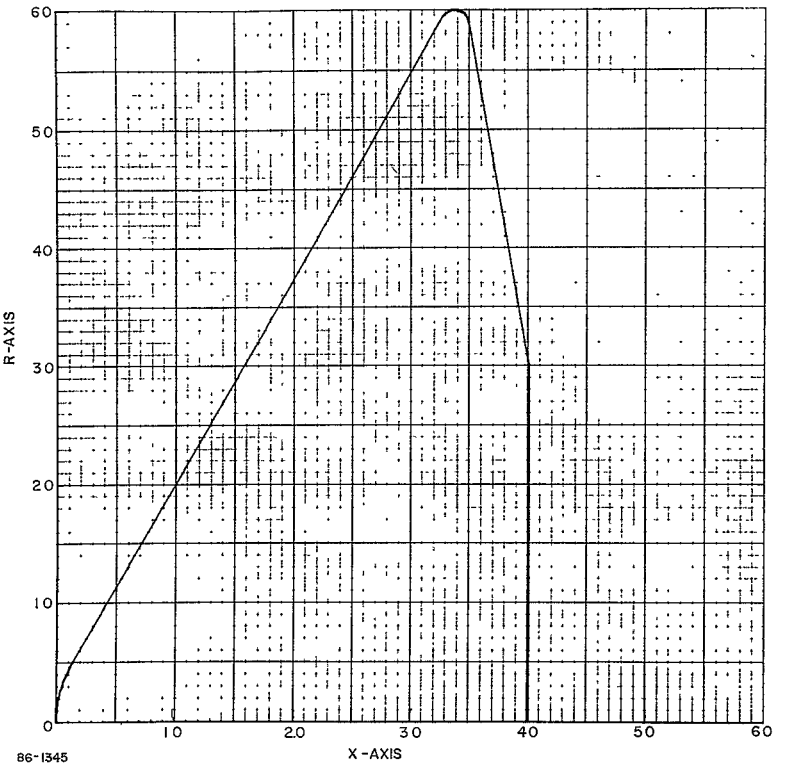

Figure 5 PLOT OF VEHICLE COORDINATES

RAD 2-0963 5 63

DIGITAL COMPUTER INPUT REQUEST FORM	PROBLEM NO 1881	PROGRAMMER A. Picado
	TITLE Newtonian Program for Bodies of Revolution	

MEMO NO	SECTION NO	WORK ORDER NO	(E240 USE ONLY)	REQUESTED BY	EXT	EST TIME	PAGE 1 OF 1 PAGES

$INPUT

DATE = _____, MEMØ = _____, CASE = _____,
BETA = _____, RA = _____, TH2G = _____,
CMAG(1) = _____, RB = _____, TH3G = _____,
CMAG(2) = _____, RC = _____, THA = _____,
DERDEL = _____, RN = _____, THB = _____,
GSØ = _____, RSB = _____, THC = _____,
LC = _____, RSC = _____, THN = _____,
MASS = _____, RSN = _____, XCG = _____,
NDIV = _____, RT = _____, ZCG = _____,
NPGSØ = _____, SM = _____,

A1 = _____, A1L = _____, DA1 = _____,
A2 = _____, A2L = _____, DA2 = _____,
A3 = _____, A3L = _____, DA3 = _____,
M2= _____, M4= _____, M7= _____, M8= _____, M10= _____,

RINP(1) = _____, _____, _____, _____, _____,
_____, _____, _____, _____, _____,
XINP(1) = _____, _____, _____, _____, _____,
_____, _____, _____, _____, _____,

$

SC 4020 plots No. of frames _____

RAD-2 0963
5 63

DIGITAL COMPUTER INPUT REQUEST FORM	PROBLEM NO 1881	PROGRAMMER A. Picado
	TITLE Newtonian Program for Bodies of Revolution	

MEMO NO	SECTION NO	WORK ORDER NO	(E240 USE ONLY)	REQUESTED BY	EXT	EST TIME	PAGE 1 OF 1 PAGES
PL-163	K420	W305-050-0000		P. Levine	2996		

$INPUT

DATE	=		MEMØ	=		CASE	= 1.
BETA	=		RA	=		TH2G	=
CMAG(1)	=		RB	=		TH3G	=
CMAG(2)	=		RC	=	6.0	THA	= -80.0
DERDEL	=		RN	=	1.0	THB	=
GSØ	=		RSB	=	0.12	THC	= 60.0
LC	=		RSC	=	0.12	THN	= 60.0
MASS	=	1.0	RSN	=		XCG	= 3.0
NDIV	=		RT	=	3.0	ZCG	=
NPGSØ	=		SM	=			

A1	=	0.0	A1L	=	180.0	DA1	= 10.0
A2	=		A2L	=		DA2	=
A3	=		A3L	=		DA3	=

M2= , M4= , M7= , M8 = , M10= ,

RINP(1) = , , , , ,
, , , , ,

XINP(1) = , , , , ,
, , , , ,

$

SC 4020 plots No. of frames

IBLDR 12/01/64

* MEMORY MAP *

SYSTEM 00000 THRU 02717
FILE BLOCK ORIGIN 02720
FILES 1. UNIT05
2. UNIT06
3. UNIT16
FILE LIST ORIGIN 02764
PRE-EXECUTION INITIALIZATION 02772
CALL ON OBJECT PROGRAM 03023
OBJECT PROGRAM 03030 THRU 46571

DECK	ORIGIN	CONTROL SECTIONS	(/NAME/=NON 0 LENGTH, (LOC)=DELETED, *=NOT REFERENCED)							
1. 1881	03030	.....	14001 *							
2. SCALIN	14026	CALINT	14214							
3. SCPLOT	14264	CPLOT	15212							
4. .LXCON	15251	.LXSTR	15251 *	.LXSTP	15255	.LXOUT	15323	.LXRTN	15335	IBEXIT 15335 *,
		.LXCAL	15340 *	.LXERR	15340	.DBCLS	15522 *	.LXARG	15671	.LO 15714 *,
		.CLSE	15722	.LFBL	15723 *	.LUNB	15724	.DFOUT	15725	
		.DEFIN	15731	.ATTAC	15735 *	.CLOSE	15737	.OPEN	15741	.READ 15743
		.WRITE	15745	.BSR	15755 *	.READR	15765	.RELES	15767 *	.LAREA 16000
		.LFBLK	16016	.LTSX	16021 *	.AREAI	16033	.UNBL	16041	.ENTRY 16045
		.GOA	16100	.GO	16104	.DERR	16120	.NOPXI	16121	.CONXT 16123
		.EX36	16145							
6. .LXSL	16152	.LXSEL	16152	LXCSEL	16153	.LXTST	16156 *,	.LXOVL	16216 *	.LXRCT 16227 *
		.LXIND	16276 *	.LXDIS	16301 *	.LXFLG	16302 *	.LTCH	16303	
7. .FPTRP	16311	.FFPT.	16311 *	.FPOUT	16440	.FPARG	16446	/.COUNT/	16450 *	OVFLOW 16514 *
8. .ERAS.	16521	E.1	16521	E.2	16522	E.3	16523	E.4	16524	
9. .XCC.	16525	CC.1	16525	CC.2	16526	CC.3	16527	CC.4	16530	
10. XIT	16531	EXIT	16531	.EXIT.	16531 *					
11. FXEH	16532	.FXEH.	16532	.FXOUT	17067	.FXARG	17075	/.OPTW./	17151	
12. EOUT	17162	.EOUT.	17162							
13. FCNV	17524	.FCON.	17524	.FCNV.	17547	.ENDFS	17562	.CNVSW	17564	.FOX1 17570
		.FDX2	17571	.DBC	17573	.DBC8	17714	.DBC9	17717	.DBC10 17724
		.DBC20	17752	.DDSW	17762	.DDFIX	17771	.FIXSW	17777	.DDBC 20054
		.DDRS1	20326	.DDRS2	20330	.D1	20333	.D2	20335	.FERR2 20422 *
		.ANPT	20456	.DNPT	20473	.LNTP	20547	.AOUT	20616	.DFLT 20634
		.FLT	20770	.DEXPN	21060	.EXD	21061	.HOUT	21217	.INTG 21261
		.LOUT	21377	.OOUT.	21416	.XCF	21447	.TEST.	22154	.KOUNT 22157
		.LIST	22162	.DONE	22173	.OUTBF	22237	.BUF	22265	.DSTO 22266
		.WIDTH	22267	.GAIN	22270	.GAINI	22271	.FBDBF	22301	.DDOFL 22324
		.DDFLG	22325	.NOD	22326	.PEK	22327	.FEXP	22330	.DIG 22331
14. FIOS	22351	.FIOS.	22351	.FSEL.	22511	.FILR.	22515 *	.FRTB.	22524 *	.ERRTB. 22531,
		.FILL.	22534	.FCLS	22536 *	.FOPN	22542 *	.NEOF.	22556 *	.FOUT. 22711
		.REED	22717 *	.BIN	22720 *	.FCF	22721	.FGNSZ	22723 *	
15. FIOH	23005	.FIOH.	23005	.FFIL.	23574	.FRTN.	23621 *			
16. FWRD	24006	.FWRD.	24006							
17. FWRU	24032	.FWRU.	24032							
18. FWRO	24056	.FWRO.	24056	.FREST	24361 *					
19. FRDU	24463	.FRDU.	24463							
20. UNO5	24524	.UNO5.	24524							
21. UNO6	24525	.UNO6.	24525	.BUFS7	24526					
22. FIOU	24531	.FIOU.	24531	.CTUIO	25204	.NMLST	25227	.NAME.	26332	.INTAR 26333
23. JASIN	26756	ASINR	27036	ASIN	27045 *	ASIND	27054 *			
24. JACOS	27063	ACOSR	27145 *	ACOS	27152	ACOSD	27161 *			

25. .ITNOR	27170	ATANOR	27246	ATANQ	27255 *	ATANQD	27264 *						
26. JRSIM	27273	ARSINP	27334										
27. FLOG	27365	ALOG10	27365	ALOG	27367								
28. FSCN	27526	COS	27526	SIN	27530								
29. FSQR	27737	SQRT	27737										
30. FATN	30044	ATAN2	30044	ATAN	30046 *								
31. FXP2	30252	.XP2.	30252										
32. .IOCS	30370	.LIO)	30370	.MONSW	30410	.TEOR	30457	.DEFI.	30537	.JOINX	30603 *		
		.CLOS.	30622	.ATTC.	30635	.SH1	31047 *	.SH9	31111 *	.OPEN.	31132		
		.OP4	31160 *	.OPT	31211 *	.OP9.2	31225 *	.RLSE.	31277	.RER2.	31277		
		.READ.	31300	.RER1.	31323	.WRIT.	31325	.MVTIA	31513 *	.EOFEX	31574 *		
		.FEEIT	31644	.GTIOX	31665	.RW7	32003 *	.RE7	32422 *	.ENDTR	33063		
		.SEL59	33065 *	.BSR.	33476	.EOTOF	33623	.ETOF3	33631 *	.SWITC	33660		
		.TCHEX	34161	.BASIO	34164 *								
33. .IOCSN	34165												
34. IOV	34165	IOV	(34165)										
35. PLOT..	34205	PLOT..	(34205)	(6020)	34216 *	CIPE..	34223 *	PLTNO	34224 *	NOFRV	34234 *		
		BIGV	34304 *	SMALLV	34306 *	PAGE40	34313	PAGE41	34330	IO4G	34424		
		40UT	34626 *										
36. UN16	35064	.UN16.	35064										
37. SCP001	35065	?..PTA	35065	.XXSYY	35066	XXYX..	35067	YYYY..	35070	AX..	35071		
		AY..	35072 *	BX..	35073	BY..	35074 *	ML..	35075	MR..	35076 *		
		MB..	35077	MT..	35100 *	0.0	35101	WIDE..	35103	HIGH..	35104 *		
		....YY	35107	.XX.YY	35110 *	...S..	35111 *	HOLD..	35112	CAMV..	35113		
		YTOP..	35114 *	YREG..	35115 *								
38. CAMRAV	35116	CAMRAV	(35116)	SC1..	35143 *	SC2..	35144 *	SBC..	35145 *				
39. FRAMEV	35151	FRAMEV	(35151)	FRAMEV	(35151)	RESETV	35212 *	BUMP..	35221 *	STOP..	35222		
40. BRITEV	35230	BRITEV	(35230)	FAINTV	35232 *								
41. XSCALV	35262	XSCALV	35273	YSCALV	35277	NXV	35412	NYV	35416	IXV	35455 *		
		IYV	35457 *	SCERRV	35462	SERSAV	35467 *	SERREV	35474 *	UXV	35503 *.		
		UYV	35507 *	SCLSAV	35520 *	RESCLV	35532 *						
42. XMODQ	35602	XMODV	35602	YMODV	35602								
43. SMXYV	35616	SMXYV	(35616)	MSXYV	35623								
44. DXDYV	35630	DXDYV	(35630)										
45. GRIDIV	36417	GRIDIV	(36417)										
46. LINEV	37325	LINEV	(37325)	GRIDXY	37540								
47. LINRV	37566	LINRV	(37566)										
48. NONLNV	40400	NONLNV	(40400)										
49. SETCIV	41010	SETCIV	(41010)	SETCOV	41016								
50. SETMIV	41020	SETMIV	(41020)	SETMOV	41027								
51. HOLDIV	41036	HOLDIV	(41036)	HOLDOV	41041								
52. ERMRKV	41044	ERMRKV	(41044)										
53. ERRNIV	41056	ERRNLV	(41056)										
54. ERRLNV	41242	ERRLNV	(41242)										
55. APLOTV	41415	APLOTV	(41415)										
56. PLOTV	41702	PLOTV	(41702)										
57. PRINTV	41721	PRINTV	(41721)										
58. STOPTV	42031	STOPTV	(42031)										
59. LABLV	42036	LABLV	(42036)										
60. HOLLV	42336	HOLLV	(42336)										
61. BNRCDV	42363	BNRCDV	42363	BINBCD	42363 *								
62. RITE2Q	42604	RITSTV	42604 *	RITXYV	42627 *	RITE2V	42641						
63. VCHARV	43062	VCHARV	(43062)	VCHX..	43313 *	VCHY..	43314 *	CHSIZV	43315	RTSIZV	43321		
64. TABL10	43327	TABL1V	43666										
65. AICRT	43650	AICRT3	46136										
66. SORTV	46445	SORT	46536										

I/O BUFFERS 46572 THRU 77723

UNUSED CORE 77724 THRU 77777

```
$INPUT
 RN    =          0.10000000E 01,
 DA2   =          0.00000000E-38,
 A3    =          0.00000000E-38,
 A3L   =         -0.00000000E-19,
 DA3   =          0.00000000E-38,
 A1    =          0.00000000E-38,
 A1L   =          0.18000000E 03,
 DA1   =          0.10000000E 02,
 A2    =          0.00000000E-38,
 A2L   =         -0.00000000E-19,
 MFMO  =         -0.00000000E-19,
 CASE  =          0.10000000E 01,
 DATE  =         -0.00000000E-19,
 THN   =          0.60000000E 02,
 RSN   =          0.00000000E-38,
 THC   =          0.60000000E 02,
 PSC   =          0.12000000E 00,
 PC    =          0.60000000E 01,
 MASS  =          0.10000000E 01,
 THP   =          0.00000000E-38,
 PP    =          0.00000000E-38,
 PSP   =          0.12000000E 00,
 THA   =         -0.90000000E 02,
 RT    =          0.30000000E 01,
 RA    =          0.00000000E-38,
 SM    =          0.00000000E-38,
 CMAG  =          0.00000000E-38,   0.00000000E-38,
 M2    =          10,
 M4    =          10,
 M7    =          10,
 M8    =          10,
 LC    =          0.00000000E-38,
 M10   =          10,
 XCG   =          0.30000000E 01,
 ZCG   =          0.00000000E-38,
 DERDEL=          0.50000000E-02,
 BETA  =          0.00000000E-38,
 GSO   =          0.00000000E-38,
 XINP  =         -0.00000000E-19,  -0.00000000E-19,  -0.00000000E-19,  -0.00000000E-19,  -0.00000000E-19,
                 -0.00000000E-19,  -0.00000000E-19,  -0.00000000E-19,  -0.00000000E-19,  -0.00000000E-19,
                 -0.00000000E-19,  -0.00000000E-19,  -0.00000000E-19,  -0.00000000E-19,  -0.00000000E-19,
                 -0.00000000E-19,  -0.00000000E-19,  -0.00000000E-19,  -0.00000000E-19,  -0.00000000E-19,
                 -0.00000000E-19,  -0.00000000E-19,  -0.00000000E-19,
 RINP  =         -0.00000000E-19,  -0.00000000E-19,  -0.00000000E-19,  -0.00000000E-19,  -0.00000000E-19,
                 -0.00000000E-19,  -0.00000000E-19,  -0.00000000E-19,  -0.00000000E-19,  -0.00000000E-19,
                 -0.00000000E-19,  -0.00000000E-19,  -0.00000000E-19,  -0.00000000E-19,  -0.00000000E-19,
                 -0.00000000E-19,  -0.00000000E-19,  -0.00000000E-19,  -0.00000000E-19,  -0.00000000E-19,
                 -0.00000000E-19,  -0.00000000E-19,  -0.00000000E-19,
 TH2G  =          0.00000000E-38,
 TH3G  =          0.00000000E-38,
 NPGSD =          0,
 NDIV  =          20,
 $ END
```

PROGRAM 1881 MACH= -0.00 CASE= 1.00 DATE= -0.00

X	R
0.1339746D	0.50000001
3.27474A07	5.94000J00
3.2816D1D7	5.95053422
3.29950577	5.96029562
3.29938744	5.96917737
3.30814886	5.97708201
3.3186B3C9	5.98392302
3.32987469	5.98962539
3 3416D1D7	5 99412674
3.35373369	5.99737769
3.36413968	5.9994262
3.37868309	5 99999994
3.39538383	5.99883211
3.41175955	5.99535131
3.42749149	5.98962539
3.44227338	5.98176569
3.45581758	5.97192526
3.46786046	5.96029556
3.47816759	5.94710308
3.48653835	5.93260443
3.49280086	5.91708195
3.49686000	5.90083772
4 00835592	3.00000000
4.00835592	0.00000000

ALPHA	XCG	CN	CX	CM	CMQ	CLA	CL	CD	CL/CD	XCP/D
0	0.00	0.0000	1.4884	0.0000	-0.6424	-0.9768	-0.0000	1.4884	-0.0000	0.7469
	3.00			0.0000	-0.3243					
10	0.00	0.0875	1.4512	-0.0654	-0.6328	-0.8946	-0.1658	1.4444	-0.1148	0.7467
	3.00			-0.0435	-0.3193					
20	0.00	0.1648	1.3442	-0.1229	-0.6043	-0.6729	-0.3048	1.3195	-0.2310	0.7458
	3.00			-0.0817	-0.3047					
30	0.00	0.2229	1.1801	-0.1658	-0.5577	-0.3663	-0.3970	1.1334	-0.3503	0.7441
	3.00			-0.1101	-0.2810					
40	0.00	0.2550	0.9785	-0.1890	-0.4947	-0.0494	-0.4337	0.9135	-0.4748	0.7413
	3.00			-0.1253	-0.2489					
50	0.00	0.2575	0.7637	-0.1897	-0.4172	0.2033	-0.4195	0.6882	-0.6095	0.7367
	3.00			-0.1254	-0.2096					
60	0.00	0.2306	0.5612	-0.1680	-0.3277	0.3373	-0.3707	0.4803	-0.7718	0.7286
	3.00			-0.1104	-0.1645					
70	0.00	0.1824	0.3863	-0.1301	-0.2689	0.4692	-0.3006	0.3035	-0.9904	0.7133
	3.00			-0.0845	-0.1352					
80	0.00	0.1295	0.2378	-0.0885	-0.2199	0.5334	-0.2117	0.1689	-1.2538	0.6836
	3.00			-0.0562	-0.1114					
90	0.00	0.0837	0.1105	-0.0479	-0.1908	0.6431	-0.1105	0.0837	-1.3202	0.5724
	3.00			-0.0270	-0.1160					
100	0.00	0.0540	-0.0369	-0.0085	-0.2298	0.9426	0.0269	0.0596	0.4523	0.1583
	3.00			0.0050	-0.1929					
110	0.00	0.0404	-0.2428	0.0203	-0.2884	1.1671	0.2143	0.1210	1.7718	-0.5019
	3.00			0.0304	-0.2959					
120	0.00	0.0393	-0.5058	0.0346	-0.3563	1.1355	0.4184	0.2869	1.4584	-0.8806
	3.00			0.0444	-0.3993					
130	0.00	0.0400	-0.8164	0.0406	-0.4539	0.8760	0.5997	0.5554	1.0798	-1.0168
	3.00			0.0506	-0.5115					
140	0.00	0.0374	-1.1462	0.0414	-0.5485	0.3084	0.7081	0.9021	0.7850	-1.1066
	3.00			0.0507	-0.6087					
150	0.00	0.0315	-1.4558	0.0367	-0.6072	-0.4296	0.7006	1.2765	0.5488	-1.1658
	3.00			0.0446	-0.6878					
160	0.00	0.0228	-1.7080	0.0274	-0.6580	-1.1520	0.5627	1.6128	0.3489	-1.2032
	3.00			0.0331	-0.7461					
170	0.00	0.0120	-1.8725	0.0146	-0.6891	-1.6736	0.3134	1.8462	0.1697	-1.2240
	3.00			0.0176	-0.7819					
180	0.00	0.0000	-1.9297	0.0000	-0.6996	-1.8599	0.0000	1.9297	0.0000	-1.2296
	3.00			0.0000	-0.7940					

RHO N= 0.00356 PHO A= 0.00755 XCG= 3.00000 XCG/D= 0.25000 RGX/D= 0.29978 RGY/D= 0.22102

```
 2663 LINES OUTPUT.
      $IBSYS
      $PAUSE
      OPER. ACTION PAUSE

      ..CONTINUING

      $PAUSE
      OPER. ACTION PAUSE

      ..CONTINUING

      $IBSYS
0000000000000Q0000080001I-0101GQ000008Q001F00Q0001BSYST-0000103000640070000000 )
      1 LINES OUTPUT THIS JOB.
```

III. COMPUTATIONS

A. BLOCK DIAGRAM

A block diagram illustrating the information flow within the Program 1881 is given in Figure 6.

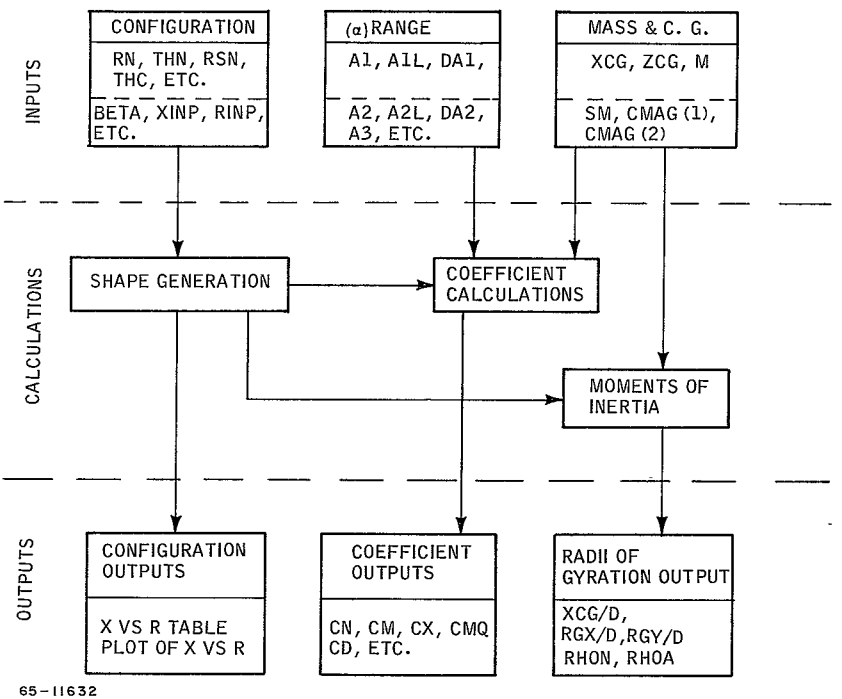

Figure 6 BLOCK DIAGRAM OF PROGRAM 1881

B. SYMBOLS

$A_1(x)$	function defined by equation (10)
$B_1(x)$	function defined by equation (11)
C_D	drag coefficient
C_L	lift coefficient
C_m	moment coefficient (based on characteristic radius R_c and characteristic length d)
C_{m_α}	$(\partial C_m/\partial \alpha)$
C_{m_q}	$(\partial C_m/\partial Q)$
C_N	coefficient of force normal to body
C_x	coefficient of force along body axis
d	characteristic length, diameter (feet) = $2R_c$
dQ	increment in Q used to compute derivatives (radians) dQ = 0.005
$d\alpha$	increment in α used to compute derivatives (radians) $d\alpha$ = 0.005
$G_1(x)$	function defined by equation 12
L_c	length of cylindrical section
M	vehicle mass
q	angular pitch speed (rad/sec)
Q	pitching speed parameter· Q = qd/2V (radians)
R_B	radius of flare
R_c	characteristic radius (cylinder radius, usually)
R_N	radius of spherical nose cap
R_{SB}	toroidal radius between flare and aftcone
R_{SC}	toroidal radius following cone
R_{SN}	toroidal radius following nose cap
R_T	radius of truncated afterbody
SM	static margin
V_A	volume rear of c. g. position
V_N	volume forward of c. g. position
x	axial coordinate; nose is located at x = 0
X_f	length of body
X_{CG}	distance of center of gravity from nose
X_{CP}	distance of center of pressure from nose
Z_{CG}	offset distance of center of gravity
$Z_1(x)$	function defined by equation (14)
α	angle of attack
β	slope at start of tension shell

ρ_A	density aft of c g. position	θ_{2G}	slope at start of general shape
ρ_N	density forward of c.g. position	θ_{3G}	slope at end of general shape
θ	body contour slope		
θ_A	slope of aftcone	θ_{3T}	slope at end of tension shell
θ_B	slope of flare	ω_1	Function defined by Equation (15)
θ_C	slope of cone		
θ_N	slope at end of nose cap		

Subscripts

$i = 0$ denotes moments taken about the nose

$i = g$ denotes moments taken about the center of gravity

C. EQUATIONS

1. Coefficient Calculation

a Newtonian Coefficients

$$C_{N_i} = -\frac{2}{\pi R_c^2}\int_0^{X_f}\left[-A_1(x)\cos\omega_1^* + B_1(x)\left(\frac{\omega_1^*}{2} - \frac{1}{4}\sin 2\omega_1^* + \frac{\pi}{4}\right)\right. \quad (1)$$

$$\left. - \frac{2}{3}G_1(x)\cos\omega_1^*(\sin^2\omega_1^* + 2)\right] r(x)\,dx$$

$$C_{X_i} = \frac{2}{\pi R_c^2}\int_0^{X_f}\left[A_1(x)\left(\omega_1^* + \frac{\pi}{2}\right) - B_1(x)\cos\omega_1^*\right. \quad (2)$$

$$\left. + 2G_i(x)\left(\frac{\omega_1^*}{2} - \frac{1}{4}\sin 2\omega_1^* + \frac{\pi}{4}\right)\right] r(x)\tan\theta\,dx$$

$$C_{m_1} = \frac{2}{\pi R_c^2} \int_o^{x_f} \left[-A_1(x) \frac{Z_i}{l} \sin\theta \left(\omega_1^* + \frac{\pi}{2} \right) - A_1(x) K_1(x) \right. \quad (3)$$

$$\left. - B_1(x) \frac{Z_1}{l} \sin\theta \right) \cos \omega_i^* + \left(B_1(x) K_1(x) - 2 G_1(x) \frac{Z_i}{l} \sin\theta \right)$$

$$\left(\frac{\omega_1^*}{2} - \frac{1}{4} \sin 2\omega_1^* + \frac{\pi}{4} \right) - \frac{2}{3} G_1(x) K_i(x) \cos \omega_i^* \left(\sin^2 \omega_1^* \right.$$

$$\left. + 2 \right) \left] \frac{r(x)}{\cos\theta} dx \right.$$

$$C_{L_1} = - C_{X_1} \sin\alpha + C_{N_1} \cos\alpha \quad (4)$$

$$C_{D_1} = C_{X_1} \cos\alpha + C_{N_1} \sin\alpha \quad (5)$$

$$X_{CP}/d = - C_{m_o} / C_{N_o} \quad (6)$$

$$C_{m_{\alpha_1}} = \frac{\partial C_{m_1}}{\partial \alpha} = \frac{C_{m_i}(\alpha + d\alpha, Q) - C_{m_1}(\alpha, Q)}{d\alpha} \quad (7)$$

$$C_{L_{\alpha_i}} = \frac{\partial C_{L_1}}{\partial \alpha} = \frac{C_{L_1}(\alpha + d\alpha, Q) - C_{L_i}(\alpha, Q)}{d\alpha} \quad (8)$$

$$C_{m_{q_1}} = \frac{\partial C_{m_1}}{\partial Q} = \frac{C_{m_1}(\alpha, Q + dQ) - C_{m_1}(\alpha, Q)}{dQ} \quad (9)$$

b. Auxiliary Equations

$$A_1(x) = 2 \sin^2\theta \cos\alpha \left(\cos\alpha + 2Q \frac{Z_1}{l} \right) \quad (10)$$

$$B_1(x) = -2 \sin\theta \left[\cos\theta \sin 2\alpha + 2Q \left(K_1(x) \cos\alpha + \frac{Z_1}{l} \cos\theta \sin\alpha \right) \right] \tag{11}$$

$$G_1(x) = \cos\theta \sin\alpha \left(\cos\theta \sin\alpha + 2Q K_1(x) \right) \tag{12}$$

$$K_1(x) = \frac{r(x)}{l} \sin\theta + \frac{x - x_1}{l} \cos\theta \tag{13}$$

$$Z_1 = \begin{array}{l} 0 \text{ IF } 1 = 0 \\ Z_g \text{ IF } 1 = g \end{array} \tag{14}$$

$$\omega_1^* = \begin{cases} \text{ARC sin} \left(\dfrac{\sin\theta \cos\alpha}{\cos\theta \sin\alpha} \right) \text{ IF } \left| \dfrac{\sin\theta \cos\alpha}{\cos\theta \sin\alpha} \right| \leq 1 \\ \pi/2 \text{ If } \cos\theta \sin\alpha = 0 \text{ and } \sin\theta \cos\alpha \geq 0 \\ -\pi/2 \text{ If } \cos\theta \sin\alpha = 0 \text{ and } \sin\theta \cos\alpha < 0 \\ \pi/2 \text{ If } \dfrac{\sin\theta \cos\alpha}{\cos\theta \sin\alpha} > 1 \\ -\pi/2 \text{ If } \dfrac{\sin\theta \cos\alpha}{\cos\theta \sin\alpha} < -1 \end{cases} \tag{15}$$

c. Center of Gravity Determination

1) C_{m_α} Criteria

$$\left(X_{CG}\right)_{\alpha=0} = \frac{d}{C_{N_\alpha}} \left[\left(C_{m_\alpha}\right)_{\text{spec.}} - \left(C_{m_\alpha}\right)_{1=0} \right]_{\alpha=0} \tag{16}$$

$$\left(X_{CG}\right)_{\alpha=180} = \frac{d}{C_{N_\alpha}} \left[\left(C_{m_\alpha}\right)_{\text{spec.}} - \left(C_{m_\alpha}\right)_{1=0} \right]_{\alpha=180} \tag{17}$$

2) Static Margin Criteria

At $\alpha = 0$, $X_{CG} = X_{CP} - SM$

At $0 < \alpha \leq 180$, $X_{CG} \leq X_{CP}$

2. Moments of Inertia

a. Density Distribution

$$X_{CG} = \left[\frac{\int_0^{X_{CG}} xr^2 dx + \frac{\rho_A}{\rho_N} \int_{X_{CG}}^{X_f} xr^2 dx}{\int_0^{X_{CG}} r^2 dx + \frac{\rho_A}{\rho_N} \int_{X_{CG}}^{X_f} r^2 dx} \right] \tag{18}$$

$$M = \rho_N \left(V_N + \frac{\rho_A}{\rho_N} V_A \right) \tag{19}$$

where,

$$V_N = \pi \int_0^{X_{CG}} r^2 dx \tag{20}$$

$$V_A = \pi \int_{X_{CG}}^{X_f} r^2 dx \tag{21}$$

b. Moments of Inertia

$$I_y = \pi \rho_N \left[\int_0^{X_{CG}} x^2 r^2 dx + \frac{\rho_A}{\rho_N} \int_{X_{CG}}^{X_f} x^2 r^2 dx + \frac{1}{4} \int_0^{X_{CG}} r^4 dx + \frac{\rho_A}{4\rho_N} \int_{X_{CG}}^{X_f} r^4 dx \right] - M X_{CG}^2 \tag{22}$$

$$I_x = \frac{\pi \rho_N}{2} \left[\int_0^{X_{CG}} r^4 dx + \frac{\rho_A}{\rho_N} \int_{X_{CG}}^{X_f} r^4 dx \right] \tag{23}$$

IV. IBM ROUTINES

A. PROGRAM FLOW

A flow diagram of Program 1881 is shown as Figure 7.

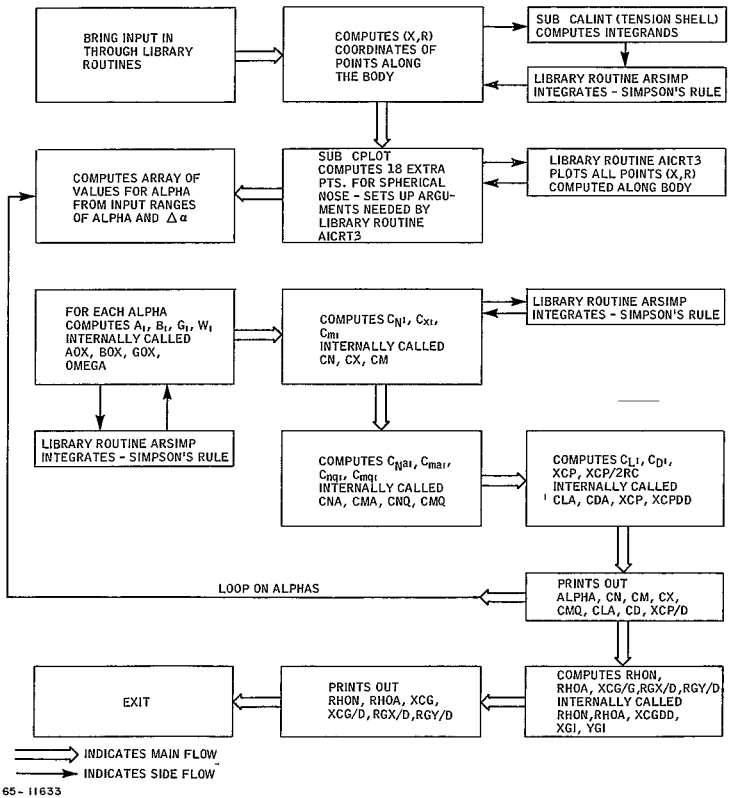

Figure 7 FLOW DIAGRAM OF PROGRAM 1881

B. SUBROUTINES

CALINT

VARIABLE	THR	DELR	R3	RK	SBETAR	CBETAR	RJ	Q000FL
SUBROUTINE INPUT OR OUTPUT	INPUT	INPUT	INPUT	INPUT	INPUT	INPUT	OUTPUT	OUTPUT
SOURCE	INPUT	MAIN	MAIN	MAIN	MAIN	MAIN		

CPLØT

VARIABLE	X	R	L	T	RN	THETAN	RAD
SUBROUTINE INPUT OR OUTPUT	INPUT	INPUT	INPUT	INPUT	INPUT	INPUT	INPUT
SOURCE	MAIN	MAIN	MAIN	INPUT	INPUT	MAIN	MAIN

1. Subroutine CALINT

a. Purpose

This subroutine is used in the case of the tension shell (third section) to compute the integrands Q000FL required to apply Simpson's Rule in subroutine ARSIMP.

b. Method

Starting with initial angle BETA at the first point of the section, other points along the section for each DELR increment in the radius are computed. The section is subdivided into NDIV portions. To compute the abcissa X of the righthand point of each of these portions, an integration is performed over each portion. Thirty-two (32) intervals are considered for each portion and, therefore, a loop is set up to compute the integrands Q000FL at 33 points. For each of these points the ordinate RJ is computed in the same loop. The last computed RJ for each portion is the ordinate of the point corresponding to that portion.

2. Subroutine CPLØT

a. Purpose

To set up the array of points (X, R) to be plotted by library routine AICRT3.

b. Method

In MAIN, the first point computed is the end point of the first section. Therefore, for the purpose of plotting the whole body, compute 18 extra points in the first section of CPLØT. These extra points are then incorporated into the X and R arrays of points computed in MAIN. CPLØT also computes the maximum values XU and YU for X and R from the respective arrays and chooses the greater of the two to establish the scale of the plot.

All the variables in the calling sequence of library routine AICRT3 are set to the proper values and the total array of points XPT (abcissas) and RPT (ordinates) are then plotted on the 4020.

3. Main Program

a. Purpose

The main program computes the array of coordinates (X, R) along the body, defines table of alphas to be considered, performs preliminary computations for the integration procedures, sets up the main logical flow of the problem and performs the final computations to obtain the aerodynamic coefficients.

b. Method

The program first sets the values of all preset input, then reads in the data through the Namelist array INPUT.

After converting all input angles to radians and finding the values of their sines and cosines, the program proceeds to compute the coordinates (X, R) of the points considered for each section. The first point to be computed is the intersection of the nose radius with the body surface, i. e., the end point of the first section (Statement No. 302). All curved sections (except the first) are subdivided into the prescribed input number, M2, M4, M7, M8, and M10. If these are not input, the program will use the preset values. The third section may have one of the three different shapes, i.e., general, tension, or conic shape.

In the general shape (Statement No. 9141), the points along the section are input (XINP, RINP) and are merely incorporated in the (X, R) arrays of coordinates for the whole body.

In the case of the tension shape (Statement No. 486), the initial angle BETA is input and the program computes the points determined by the input number of divisions NDIV. The angle θ along the section lies between BETA $\leq \theta \leq 90$ degrees and for the last point on the section $\theta = 90$ degrees. The number of divisions is preset to 20. For each subdivision a point (X, R) will be computed. The ordinate R is obtained by adding an increment ΔR to the R of the previous point. Each ΔX is obtained by integrating over the respective subdivision (Loop on Statement No. 5533). For integration purposes in each subdivision, 32 intervals (or 33 auxiliary points) are considered. The integrands Q000FL are computed in subroutine CALINT. Then library routine ARSIMP integrates using Simpson's Rule.

The ordinate R is, for each subdivision, the value RJ computed in CALINT. In the case of a conic shape (Statement No. 484), only the end point is computed. The remaining sections are handled by straightforward application of the given formulas. For RSB $\neq$ 0 (internally RSCB), the program assumes that both toroidal sections 10 and 9 are given.

Symbol L represents the number of points whose coordinates were computed along the body. These L points plus 18 extra points on the nose computed by subroutine CPLØT will be plotted (R versus X) by library routine AICRT3, using the first available tape on channel A.

Arrays X(1-L) and R(1-L) are then printed out (Statement No. 4999) and the program proceeds by forming the angle of attack table for the 3 possible ranges using the input A1, A2, A3, A1L, A2L, A3L and

the input increments DA1, DA2, DA3 (Statements between Statement Nos. 13 and 20).

A loop on ALPHAS (Statement number 1003) is set up comprising most of the rest of the program, i.e., for each ALPHA a set of force and moment coefficients (C_{N_1}, C_{X_1}, C_{m_i}, C_{L_i}, C_{D_i}, $(L/D)_i$, Xcp and the corresponding derivatives $C_{N_{a_i}}$, $C_{m_{a_i}}$, $C_{N_{q_i}}$, and $C_{m_{q_i}}$ are computed.

The loop on ALPHAS is the outermost of a nest of loops which are completed as follows loop for subscript Ø and XG (Statement number 345), loop to compute numerically the derivatives CNA, CMA, CNQ, and CMQ (DØ 91 MM - 1, 3), loop for the integration of body sections L(Statement number 2774)(the body is subdivided into a number of portions equal to the number of computed points), and loop for computation of integrands (DØ 50 M = 1, J) (each of the L sections is further subdivided into a maximum of 9 intervals before Simpson's Rule (subroutine ARSIMP) is applied).

After exiting from this nest of loops, (after Statement No. 389) ρ_N (internally RHØN), ρ_A (internally RHØA), XCG/D (internally XCGDD), RGX/D, RGY/D are computed.

Within the ALPHA loop, the program prints out for each ALPHA the coefficients CN, CM, CX, CMQ, CLA, CD, CL/CD, and XCP/D (immediately after Statement No. 370).

Outside this loop, at the very end of the program, the quantities RHØN, RHØA, XCG, XCG/D, RGX/D, and RGY/D are printed out.

C. SIGNIFICANT EQUATIONS

1. Main Program — Statement Number*

Section 1 (NØSE): $X(1) = RN \cdot [1 - \cos(THETAN)]$

$$R(1) = \sqrt{X(1) \cdot [2RN - X(1)]} \qquad 302$$

* The statement numbers are provided to assist in locating the equations in the program listing as the equations noted appear in the immediate vicinity of these statement numbers.

Section 2 (TØRØIDAL):

$$X(J) = X(1) + RS \cdot \left\{ \cos(THETAN) - \sin\left\{ XJ \quad \frac{[90 - (THETAN + THETAC)]}{XM2} \right\} \right\}$$

where, $XJ = 1, \ldots, XM2$

$$R(J) = R(1) + RS \cdot \left\{ \cos\left\{ XJ \quad \left[\frac{90 - (THETAN + THETAC)}{XM2} \right] \right\} - \sin(THETAN) \right\}$$

303

Section 3 (CØNIC):

$$R(K) = RC - RSCA\,[1 - \cos(THETAC)]$$

$$X(K) = X(K-1) + [R(K) - R(K-1)] \; \frac{\cos(THETAC)}{\sin(THETAC)} \,, \qquad 306$$

Section 4 (TØRØIDAL):

$$X(J) = X(K) + RSCA\,[\sin(THETAC) - \sin(TJ)]$$

$$R(J) = R(K) + RSCA\,[\cos(TJ) - \cos(THETAC)]$$

where,

$$TJ = \frac{(XJ \cdot TM4)}{RAD}$$

and, $TM4 = THETAC/M4$ 325

Section 5 (CYLINDRICAL):

$$X(K) = X(K-1) + DX1$$

$$R(K) = RC \qquad 312$$

Section 6 (CØNIC):

$$R(K) = RB - RSCB\,[1 - \cos(FTHETA)]$$

$$X(K) = X(K-1) + (R(K) - RC) \cdot \frac{\cos(FTHETA)}{\sin(FTHETA)} \qquad 314$$

Section 7 (TØRØIDAL):

$$X(J) = X(K) + RSCB\;\;[\sin(FTHETA) - \sin(TJ)]$$

$$R(J) = R(K) + RSCB \cdot [\cos(TJ) - \cos(FTHETA)]$$

where, $TJ = XJ \cdot \frac{FTHETA}{M7}$ /RAD 317

Section 8 (TΦRΦIDAL):

$$X(J) = X(K) + RSCB \cdot \sin(TJ)$$

$$R(J) = RB - RSCB \cdot [1 - \cos(TJ)]$$

$$\text{where, } TJ = XJ \cdot \frac{THETAA}{M8} \text{ /RAD} \qquad 317$$

Section 9 (CΦNIC)·

$$R(K) = RA$$

$$X(K) = X(K-1) + [R(K-1) - R(K)] \cdot \frac{\cos(THETAA)}{\sin(THETAA)} \qquad 321$$

Section 10 (SPHERICAL):

$$X(J) = X(K) + RSA \cdot [\sin(TJ) - \sin(THETAA)]$$

$$R(J) = R(K) - RSA \cdot [\cos(THETAA) - \cos(TJ)]$$

$$\text{where, } TJ + [XJ \cdot (90 - THETAA)/M10 + THETAA]/RAD \qquad 326$$

$$B\Phi X = -2\sin(THETA) \left\{ \cos(THETA) \cdot \sin 2ALPHA + 2ZAQ \left[XK \cdot \cos(ALPHA) + \right. \right.$$
$$\left. \left. + \frac{ZZ(II)}{SL} \cdot \cos(THETA) \quad \sin(ALPHA) \right] \right\}$$
$$\text{where, } ZK = RX(M) \cdot \frac{\sin(THETA)}{SL} + (XZ(M) - ZX) \cdot \frac{\cos(THETA)}{SL} \qquad 48$$

$$A\Phi X = 2\sin^2(THETA \cdot \cos(ALPHA) \cdot \left[\cos(ALPHA) + 2ZAQ \cdot \frac{ZZ(II)}{SL} \right] \qquad 48$$

$$G\Phi X = \cos(THETA) \quad \sin(ALPHA) \quad [\cos(THETA) \cdot \sin(ALPHA) + 2ZAQ \cdot ZK] \qquad 48$$

$$CN(M) = \left[-A\Phi X \quad \cos(\Phi MEGA) + B\Phi X \quad \Phi Z - 2G\Phi X \cdot \cos(\Phi MEGA) \cdot \frac{(\sin^2(\Phi MEGA)+2)}{3} \right]$$
$$\cdot RX(M) \qquad 48$$

$$\text{where, } \Phi Z = 5\ \Phi MEGA - .25\sin(2\Phi MEGA) + .78539816$$

$$RX(M) = \sqrt{2RN \quad XZ(M) - XZ(M)^2}$$

$$CX(M) = [A\Phi X \cdot (OMEGA + 1\ 5707963) - B\Phi X \cos(\Phi MEGA) + 2 \cdot \Phi Z \cdot G\Phi X] \cdot RX(M) \frac{\sin(THETA)}{\cos(THETA)}$$
$$48$$

$$CM(M) = \left\{ - A\emptyset X \cdot ZZ(II) \quad \sin(THETA) \cdot (\emptyset MEGA + 1\ 5707963) - \right.$$

$$- [A\emptyset X \cdot ZK \cdot SL - B\emptyset X \cdot ZZ(II) \cdot \sin(THETA)] \cdot \cos(\emptyset MEGA) +$$

$$+ [B\emptyset X \ ZK \quad SL - 2G\emptyset X \quad ZZ(II) \cdot \sin(THETA)] \cdot \emptyset Z -$$

$$\left. - 2\frac{G\emptyset X}{3} \cdot ZK \cdot SL \quad \cos(\emptyset MEGA)[\sin^2(\emptyset MEGA) + 2] \right\} \cdot \frac{RX(M)}{\cos(THETA)} \qquad 48$$

$$CD(MM) = CX1 \cdot \cos(ALPHA) + CN1 \cdot \sin(ALPHA) \qquad 48$$

$$CL(MM) = CX1 \quad \sin(ALPHA) + CN1 \cdot \cos(ALPHA) \qquad 93$$

$$CNA = \frac{(CN3 - CN1)}{DDL} \qquad 352$$

$$CMA = \frac{(CM3 - CM1)}{DDL}$$

$$CNQ = \frac{(CN2 - CN1)}{DDL}$$

$$CMQ = 2 \quad \frac{(CM2 - CM1)}{DDL}$$

$$XCP = - SL \cdot \frac{CM1}{CN1} \qquad 920$$

2. Subroutine CALINT

THR = THR DELR * DERIN

RJ = RJ DELR

where, CØTM = (CØTT CØTTM1)/2.

$$AL\emptyset GBE = L\emptyset G \left[\frac{1 + \cos(BETAG)}{\sin(BETAR)} \right]$$

$$DERVR1 = \left\{ \frac{RK^2 - R3^2}{AL\emptyset GBE} \cdot \frac{\sin(THR)}{1 + \cos(THR)} \cdot \left[- 1 - \frac{(1 + \cos(THR)) \quad \cos(THR)}{\sin^2(THR)} \right] \right\}$$

DERIN = RJ/(0.5 * DERVR1)

3. Subroutine CPLØT

ANGL = (XK · DIVTHN)/RAD

where, DIVTHN = THETAN/18.

and, XK = 1, . . 18

XPT(I) = RN · [1 – cos(ANGL)] 60

RPT (I) = RN sin (ANGL)

156A

V. REFERENCES

1. Wells, W. R., and W. O. Armstrong, Tables of Aerodynamic Coefficients Obtained from Developed Newtonian Expressions for Complete and Partial Conic and Spheric Bodies at Combined Angles of Attack and Side Slip with Some Comparisons With Hypersonic Experimental Data, NASA TR R-127 (1962).

2. Tobak, M., and W. R. Wehrend, Stability Derivatives of Cones at Supersonic Speeds, NACA TN 3788 (September 1956).

3. Gray, J. D., Drag and Stability Derivatives of Missile Components According to the Modified Newtonian Theory, AEDC TN 60-191 (November 1960).

4. Anderson, M. S., H. G. Bush, and R. W. Frauch, A Tension Shell Structure for Application to Entry Vehicles, NASA TN D-2675 (March 1965).

VI. BIBLIOGRAPHY

A. FORCE AND MOMENT

Nichols, J. O., and E. A. Nierengarten, Aerodynamic Characteristics of Blunt Bodies, Jet Propulsion Laboratory, Pasadena, California, Technical Report No. 32-677, (19 November 1964).

Robinson, J.C., and A. W. Jordan, Exploratory Experimental Aerodynamic Investigation of Tension Shell Shapes at Mach 7, Washington, D. C., NASA TN D-2994 (September 1965).

Wehrend, W. R., Jr., Wind-Tunnel Investigation of the Static and Dynamic Stability Characteristics of a 10 Degree Semivertex Angle Blunted Cone, NASA TN D-1202 (January 1962).

Blaylock, R. B., Force Test of a Cold-Wall Blunt-Nose Cylinder-Flare Model in Air-Carbon Dioxide Mixtures in the JPL 21-inch Hypersonic Wind Tunnel, JPL N64-33218, Contract NAS 7-100 (15 March 1964).

Peterson, V. L., Motions of a Short 10-Degree Blunted Cone Entering a Martian Atmosphere at Arbitrary Angles of Attack and Arbitrary Pitching Rates, Ames, Moffett, California, NASA TN D-1326 (May 1962).

Boylan, D. E., and W. H. Sims, Experimental Determination of Aerodynamic Drag on a Blunted 10-Degree Cone at Angle of Attack in Hypersonic Rarefied Flow, Arnold Engineering Development Center, Air Force Systems Command, United States Air Force, AEDC-TDR 64-60 (April 1964).

Keyes, J. W., Aerodynamic Characteristics of Lenticular and Elliptic Shapes Configurations at a Mach Number of 6, NASA Langley, N65-15613, NASA TN D-2606 (February 1965).

B. DYNAMIC STABILITY

Marte, J. E., and R. W. Weaver, Low Subsonic Dynamic-Stability Investigation of Several Planetary-Entry Configurations in a Vertical Wind Tunnel, Part I, Jet Propulsion Laboratory, Technical Report No. 32-743 (1 May 1965).

Fisher, L. R., A. L. Keith, Jr., and J. R. DiCamillo, Aerodynamic Characteristics of Some Families of Blunt Bodies at Transonic Speeds, NASA Memo 10-28-58L.

Kılgore, R. A., Aero Dampıng and Stabılity of a Sphere at Mach Number from 0.20 to 4.63, Thesıs, College of William and Mary.

Intrieri, P. F., Free Flight Measurements of the Statıc and Dynamıc Stability and Drag of a 10-Degree Blunted Cone at Mach Numbers 3.5 and 8.5, NASA TN D-1299 (May 1962).

Wehrend, W. R., Jr., An Experimental Evaluatıon of Aerodynamıc Dampıng Moments of Cones wıth Different Centers of Rotatıon, NASA TN D-1768 (March 1963).

Keyes, J. W., Longitudınal Aerodynamic Characterıstics of Blunted Cones at Mach Nos. of 3.5, 4 2, and 6.0, Langley, NASA TN D-2201 (February 1964).

PROGRAM 1882

SUBSYSTEM WEIGHTS PROGRAM (1882)

CONTENTS

I. Introduction 1

A. General Description 1
B. Calculation Model 1
C. Limitations 9

II. Program Usage 11

A. Input Definitions 11
B. Input Procedures 17
C. Output Definitions 21
D. Sample Problem 26

III. Computations 41

A. Block Diagram 41
B. Symbols 42
C. Engineering Equations 46

IV. IBM Program Routines 86

A. Program Flow 86
B. Common Storage 89
C. Subroutines 91
D. Main Program 102
E. Significant Equations 104

V. References 112

161<

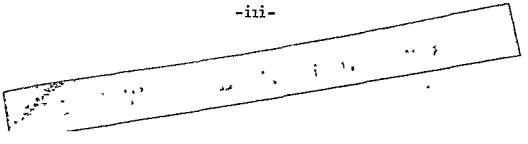

ILLUSTRATIONS

Figure	1	Vehicle Shape Parameters	2
	2	Tension Shell and General Shape Geometries	3
	3	Descent System Options	5
	4	Landed Package Geometries	7, 8
	5	Packaging Model	10
	6	Crushing Strength of Impact Materials	22
	7	Block Diagram of Program 1882	41
	8	Method of Solution of Impact Attenuator Design	74
	9	Packaging Logic Diagram	76
	10	Program Flow for Descent System	86
	11	Program Flow for Impact Attenuation System	87
	12	Program Flow for Lander Packaging System	88

I. INTRODUCTION

A. GENERAL DESCRIPTION

The purpose of this program is to determine the component system weights for an axisymmetric entry vehicle. The program has four distinct segments within which exists a number of options. The four segments are as follows

1. Heat Shield and Structural Shell -- The inboard profile coordinates of the vehicle are generated based on body input parameters. The moments of inertia, center of gravity, area and weight of each section of the vehicle are then computed. The weights are based upon specified unit weights for the heat shield and structure of each section.

2. Descent System -- The descent system weight computation is based on specified deployment and impact conditions. Three options exist (a) a two chute; (b) a single-chute, or (c) a drogue-chute retrorocket system.

3. Impact Attenuation System -- The amount of crushup weight is computed so as to assure a soft landing within impact velocity and acceleration limits. Three options exist as to the landed package configuration: (a) spherical; (b) lenticular; or (c) conical. The latter option utilizes a spherical segment of crushup and assumes preferred impact orientation. All of the options yield the geometric dimensions of the crushup and payload.

4. Packaging Design -- This portion of the program packages the landed package and descent system components within the inboard profile limits of the vehicle. A minimum overall specified center of gravity must be satisfied. With the overall vehicle center-of-gravity position established, the moments of inertia are then computed for the entire capsule. The internal structural weight of the lander is also computed in this portion of the program.

B. CALCULATION MODEL

The calculation model for each of the four segments of Program 1882 is as follows:

1. Heat Shield and Structural Shell

   a. The evolved body coordinates of the vehicle reflect the bond line profile of the heat shield and structure shell. The heat shield and structural unit area weights are input for each vehicle section. The vehicle sections are identified parametically as shown in Figures 1 and 2.

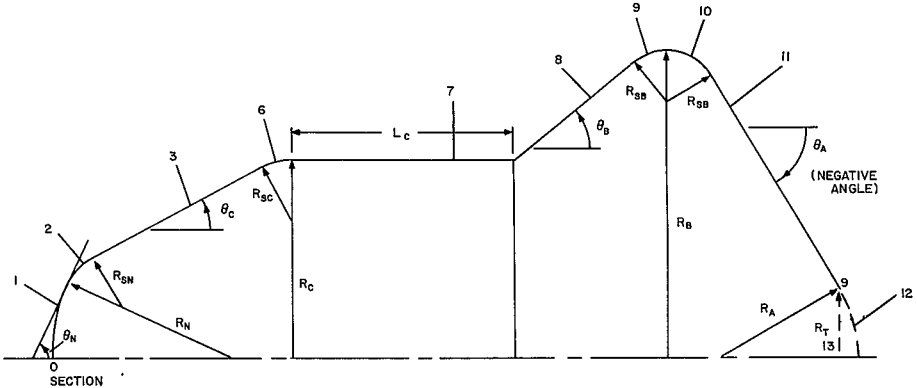

SECTION

1 NOSE SPHERE
2 R_{SN} TORUS
3 CONE (SEE FIGURE 2 FOR ADDITIONAL OPTIONS)
6 R_{SC} TORUS
7 CYLINDER
8 FLARE
9 FORE R_{SB} TORUS
10 AFT R_{SB} TORUS
11 AFT CONE
12 AFT SPHERE (R_A)
13 BASE (R_T)

65-11627

Figure 1 VEHICLE SHAPE PARAMETERS

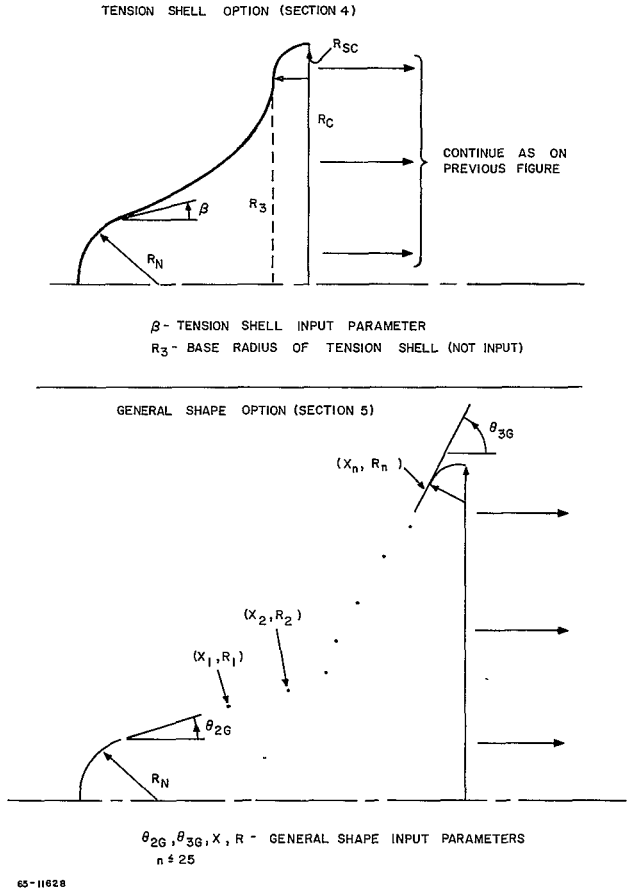

Figure 2 TENSION SHELL AND GENERAL SHAPE GEOMETRIES

b. The inertia, center of gravity, and area equations are based on a derivation assuming the heat shield and structure thickness to be small and uniform.

2. Descent System

a. The model atmosphere generated consists of a troposphere and stratosphere. Equations for the thermosphere are not utilized since it is reasonable to assume that chute deployment will always occur at an altitude well below the thermosphere region.

b. The equations of motion utilized in the trajectories are the two degree of freedom equations neglecting the centripetal acceleration and lift terms.

c. The drogue chute descent calculation assumes that the chute opens instantaneously, and hence does not account for the loss in altitude due to the filling time. This is a reasonable assumption since drogue chutes are usually fairly small in diameter with filling times in the order of 0.05 second. The drogue chute is sized by the requirement of achieving a prescribed Mach number at a prescribed altitude.

d. The main chute descent accounts for the loss in altitude due to chute opening and assumes constant velocity during filling. Subsonic chutes (Mach 0.8) in the order of 60 feet diameter would result in filling times of about 1.5 seconds, and hence incur an altitude loss of about 800 to 1000 feet.

e. Terminal descent velocity is assumed for the calculation of the main chute canopy size.

f. All trajectory calculations account for the correct vehicle and chute drag components where applicable.

g. Jettisoning of heat shield, structure, and drogue system weights are accounted for in the trajectory calculations where applicable.

h. A cluster of chutes is employed if the required diameter of a single main chute exceeds the maximum specified value DMCMAX.

i. The descent system options are depicted in Figure 3.

j. The parachute weight model (see below) accounts for materials, dynamic pressure and size.

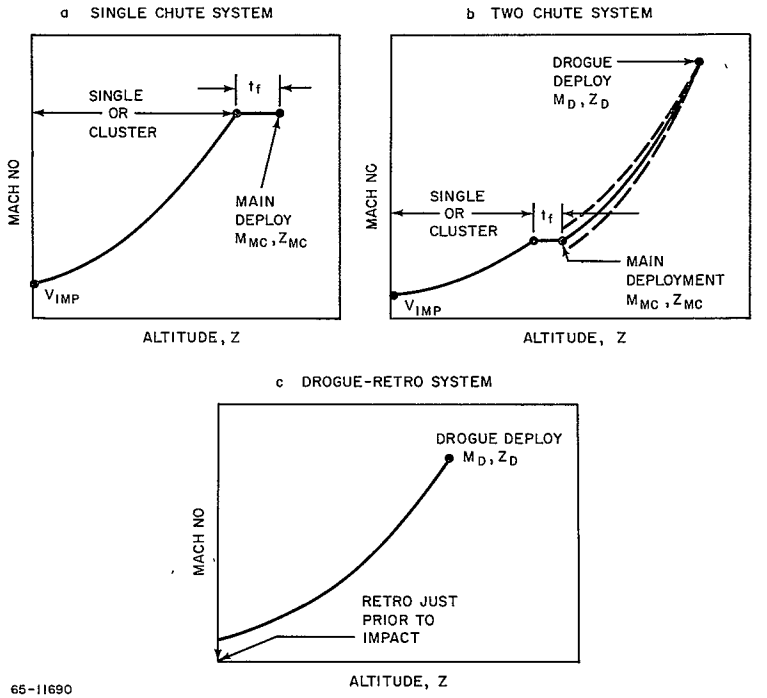

Figure 3 DESCENT SYSTEM OPTIONS

Parachute Weight Model

Materials (K)

Dynamic Pressure (q)

Diameter (d)

$$W_T = K\left[\frac{d^3}{18.6}\quad\frac{q}{65}\right]$$

3. Impact Attenuation System

a. The equations utilized are based on the analysis of Reference 1 which accounts for the variation of mass during the crush-up stroke and for materials with anisotropic properties.

b. Equations derived are for the particular case where the crushable material is in the shape of a spherical segment.

c. Crushing is assumed to start at the initial contact point and then the surface of crushing moves upward into the material during impact. Hence, at any time the mass below this surface has already been brought to rest such that the mass being decelerated is a variable with time.

d. The crushable material is assumed to be rigid and perfectly plastic, deforming at constant stress up to the total usable strain.

e. The conical and lenticular options which utilize a spherical segment of crushup assume preferred orientation upon impact, such that the resultant deceleration vector passes through the center of gravity of the landed package.

f. The impact surface is considered to be flat, smooth and infinitely rigid.

g. Landed package geometries are shown in Figure 4.

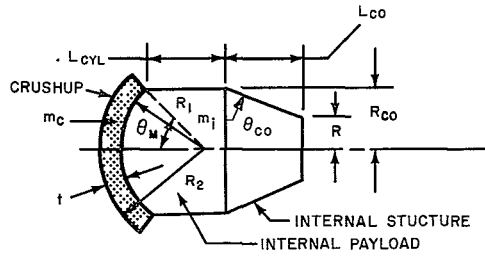

4a. CONE-CYLINDER SHAPE LANDER

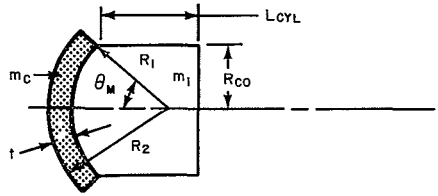

4b. CYLINDER SHAPE LANDER

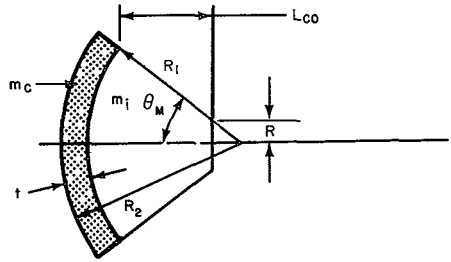

65-11691

4c CONE SHAPE LANDER

Figure 4 LANDED PACKAGE GEOMETRIES

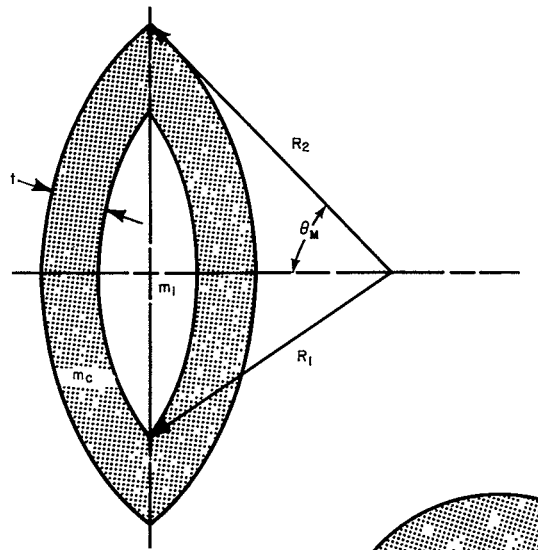

4d. LENTICULAR SHAPE LANDER

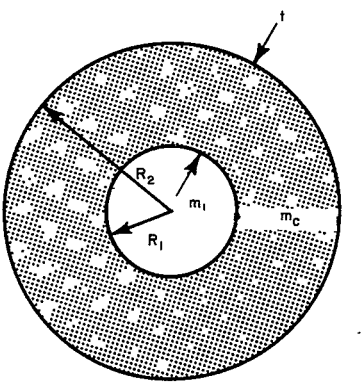

4e. SPHERE SHAPE LANDER

65-11691

Figure 4 LANDED PACKAGE GEOMETRIES (Concl'd)

4 Lander Packaging Design

a. The thickness of the heat shield and structure is accounted for in the lander packaging by adding the thickness to the outer dimension of the landed package.

b. The internal payload is packaged with uniform density.

c. A symmetrical cylindrical ring, placed at the maximum radius of the landed package, is utilized for parachute packaging as shown in Figure 5.

d. The landed package is located as far forward in the vehicle as possible as shown in Figure 5.

C. LIMITATIONS

Limitations of Program 1882 are listed below:

1. The heat shield and structure must be of uniform unit weight and/or thickness for each section.

2. Parachute designs (drogue and/or main) do not account for reefing; however, the chute drag coefficients can be arranged so as to simulate reefing.

3. The parachute design does not include fabric heating effects which often result in Mach number deployment limitations for various fabrics.

4. The parachute design does not include stability considerations and/or losses in performance due to angle of attack or Reynolds number effects.

5. The retrorocket system design is based on a single-impulse system.

6. The impact crush-up design assumes homogeneous materials.

7. Only spherical segments of crushup can be utilized for the impact geometry.

8. The impact attenuation analysis assumes that crushing takes place only in the plane of the impact surface, that the payload is rigidly attached and that crushing cannot take place at an inner crushup surface and proceed outward.

171

CONSTRAINTS.

1 LANDER GEOMETRY $R_V(X) > R_P(X)$

2 $X_{CG_{OVERALL}} < X_{CG_{SPECIFIED}}$

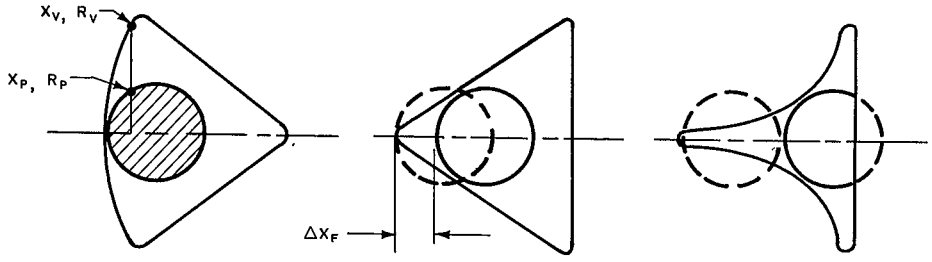

5a. LOCATION OF LANDED PACKAGE

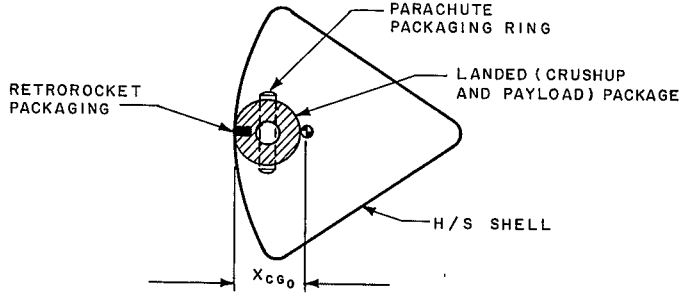

5b. PARACHUTE AND ROCKET LOCATIONS

65-11692

Figure 5 PACKAGING MODEL

II. PROGRAM USAGE

A. INPUT DEFINITIONS

Name	Preset Value	Symbol	Parameter	Units
ALPHA		α	Empirically determined constant relating crushing stress and density.	--
AO		a_o	Empirically determined constant describing anisotropy of crushable material.	--
A1		a_1	Empirically determined constant describing anisotropy of crushable material.	--
A2		a_2	Empirically determined constant describing anisotropy of crushable material.	--
A3		a_3	Empirically determined constant describing anisotropy of crushable material.	--
BETA	0.	β	Tangent angle at beginning of tension shell.	degrees
CDD		C_{DD}	Table of drogue chute drag coefficients, Mach number dependent.	--
CDMC		C_{DMC}	Table of main chute drag coefficients, Mach number dependent.	--
CDV		C_{DV}	Table of entry vehicle drag coefficients, Mach number dependent.	--
DELTA	0.01		Integration Δt.	seconds
DELMIT	1.E-5		Smallest allowable Δt.	seconds

Name	Preset Value	Symbol	Parameter	Units
DESSYS			Input sentinel to designate type of descent system.	--
DDMIN			Minimum drogue chute diameter.	feet
DLVFAC		ΔV	Velocity increment in rocket design.	ft/sec
DMCMAX	100.		Maximum main chute diameter.	feet
DMCMIN			Minimum main chute diameter.	feet
DNBND	1.E-3, 1.E-6, 1.E-2		Lower bounds on trajectory integration (velocity, angle, altitude).	--
DRVEL	50.		Velocity interval for printout of drogue chute trajectory.	--
EF		E	Modulus of elasticity.	psi
EPSILN		ϵ	Total usable strain.	--
EPS1	1.E-3		Convergence factor for y/R_2.	--
EPS3	1.E-3		Convergence factor for R_{CO}.	--
FACTØR	0.2		Factor by which to change Δt.	--
FALR		L_1	Temperature gradient in troposphere expressed as a fraction of the adiabatic lapse rate.	--
FREQ	0.5		Interval for exiting from integration routine.	--
FREQ2	2.		Time interval for exiting from ADAMS4 during main chute trajectory.	--
FREQ3	2.		Time interval for exiting from ADAMS4 during drogue-retro-rocket trajectory.	--

Name	Preset Value	Symbol	Parameter	Units
GAMD		γ_D	Flight path angle at drogue chute deployment.	degrees
GAMMC		γ_{MC}	Flight path angle at main chute deployment.	degrees
GIMP		γ_{imp}	Maximum allowable impact acceleration.	Earth g
GSL		g_{SL}	Gravitational acceleration at planet surface.	ft/sec^2
IMPSYS			Input sentinel to designate type of impact system.	--
ISP		I_{SP}	Required specific impulse of retrorocket.	lb-sec/lb
IYR2	0.4		Initial guess for Y/R2	--
JET			Input sentinel to indicate when jettisoning of heat shield and structure occurs.	--
LC	0.	L_C	Cylinder body section length.	feet
LCØRCØ	0.	L_{CO}/R_{CO}	Ratio of cone length to cylinder radius (internal geometry).	--
LCYRCØ	0.	L_{CYL}/R_{CO}	Ratio of cylinder length to cylinder radius (internal geometry).	--
LRDR		L_R/D_R	Ratio of retrorocket length to diameter.	--
MACD		M_D	Drogue chute deployment Mach number.	--
MACH			Table of Mach numbers.	--
MACMC		M_{MC}	Main chute deployment Mach number.	--
MCVEL	50.		Velocity interval for printout of main chute trajectory.	ft/sec

Name	Preset Value	Symbol	Parameter	Units
MR		M.R.	Mass-fuel ratio of retrorocket.	--
NRINGS	0.		Number of rings.	--
PSI		ψ	Empirically determined constant relating crushing stress and density.	--
RA	0.	R_A	Radius of rear spherical cap.	feet
RB	0.	R_B	Flare radius.	feet
RC	0.	R_C	Reference vehicle radius.	feet
RCHUTE		ρ_{CHUTE}	Packaging density of the parachute system.	lb/ft^3
RHØCM		$\rho_{C_{MAX}}$	Maximum allowable crushup density.	$slug/ft^3$
RHØCMI		$\rho_{C_{MIN}}$	Minimum allowable crushup density.	$slug/ft^3$
RHØF		ρ_{fs}	Density of internal structural face sheet.	lb/ft^3
RHØI		ρ_i	Packaging density of the internal payload.	$slug/ft^3$
RHØRØC		ρ_R	Density of retrorocket.	lb/ft^3
RHØSL		ρ_{SL}	Density of the atmosphere at planet surface.	$slug/ft^3$
RN	0.	R_N	Nose cap radius.	feet
RR	0.	r	Ordinates for general shape.	feet
RSB	0.	R_{SB}	Toroidal radius from flare to afterbody sections.	feet
RSC	0.	R_{SC}	Toroidal radius following cone section.	feet

Name	Preset Value	Symbol	Parameter	Units
RSN	0.	R_{SN}	Toroidal radius following nose cap section.	feet
RT	0.	R_T	Base radius of truncated afterbody.	feet
SECTN	0.		Ordered array of vehicle sections. Each element is a number between 1 and 13.	--
SIGCYF		σ_{cy}	Yield stress of the internal structural face sheet.	psi
STRFAC	1.		Structural weight factor.	--
TFMIN		t_{fmin}	Minimum allowable face sheet thickness.	inches
THA	0.	θ_A	Aftcone section body angle (negative).	degrees
THB	0.	θ_B	Flare section body angle.	degrees
THC	0.	θ_C	Cone section body angle.	degrees
THCØ	0.	θ_{CO}	Cone angle of the internal payload.	degrees
THM		θ_M	Angle subtended by the crushable material segment.	degrees
THN	0.	θ_N	Tangent angle at end of nose radius.	degrees
THS		$t_{H/S}$	Thickness of heat shield and structure combined.	feet
TH2G	0.	θ_{2G}	Tangent angle at beginning of general shape.	degrees
TH3G	0.	θ_{3G}	Tangent angle at end of general shape.	degrees
TN		n	Empirically determined exponent describing anisotropy of crushable material.	--

Name	Preset Value	Symbol	Parameter	Units
TSL		T_{SL}	Atmospheric temperature at planet surface.	^{o}K
TST		T_{ST}	Atmospheric temperature in the stratosphere.	^{o}K
TZERØ	0.	T_{o}	Initial time for trajectory.	seconds
UPBND	0.01, 1.E-5 0.1		Upper bounds for trajectory integration (velocity, angle, altitude).	--
VELW		V_{W}	Horizontal velocity component used in impact attenuation analysis.	ft/sec
VIMP		V_{IMP}	Design impact velocity for retrorocket system. (Vertical and horizontal components included).	ft/sec
VV		V_{V}	Design vertical descent velocity for chute system.	ft/sec
WE		W_{e}	Total capsule entry weight.	pounds
WHSD			Array of corresponding heat shield weights.	--
WRING			Array of weights of rings.	--
WSTR			Array of corresponding structure weights.	--
XA		X_{A}	Mole fraction of Argon in the atmosphere.	--
XC		X_{C}	Mole fraction of CO_2 in the atmosphere.	--
XCGMIN		$X_{CG_{MIN}}$	Minimum overall CG requirement.	feet
XD		X_{D}	Dynamic opening shock load factor on drogue chute.	--

Name	Preset Value	Symbol	Parameter	Units
XMC		X_{MC}	Dynamic opening shock load factor on main chute.	--
XN		X_N	Mole fraction of N_2 in the atmosphere.	--
XØ		X_o	Mole fraction of O_2 in the atmosphere.	--
XRING			Array of x-coordinates specifying location of rings.	--
XX		X	Abcissas for general shape.	feet
ZD		Z_D	Drogue chute deployment altitude.	feet
ZMC		Z_{MC}	Main chute deployment altitude.	feet

B. INPUT PROCEDURES

1. Heat Shield and Structural Shell

a. The body sections are specified in the array SECTN in the order in which they appear on the vehicle. The specification for each section is an integer between 1. and 13., the correspondence being as follows:

NUMBER	SECTION	INPUT REQUIRED
1.	NOSE SPHERE	RN, THN
2.	TORUS	RSN
3.	CONE	THC
4.	TENSION SHELL	BETA
5.	GENERAL SHAPE	TH2G, TH3G, X, R
6.	TORUS	RSC, RC
7.	CYLINDER	LC
8.	FLARE	THB
9.	TORUS	RSB

NUMBER	SECTION	INPUT REQUIRED
10.	TORUS	RSB
11.	AFTCØNE	THA
12.	AFTSPHERE	RA
13.	BASE	RT

The nose sphere must always be the first section, i.e. SECTN (1) = 1. A vehicle consisting of a nose sphere, cone, aftcone, and base would be specified as SECTN = 1., 3., 11., 13. The individual sections are depicted in Figures 1 and 2.

b. Body Section 6 can be omitted or included only together with Sections 3, 4, and 5.

c. Body Section 9 can be omitted or included only together with Section 8.

d. The body radius R_c must always be specified

e. The body angle input θ_A (THA) describing the aftcone section must be input with a minus sign to be consistent with the coordinate system.

f. For the tension shell β (BETA) and R_{sc} (RSC) must be specified

g. For the general shape the initial and final body angles θ_{2G} (TH2G), and the approximate x and r coordinates of that section must be specified A maximum of 25 and a minimum of 3 points can be specified.

h. If the Section 2 is deleted, then the initial angles β (BETA), θ (THC), and θ_{2G} (TH2G) must be equal to the nose cap section body angle θ^c_N (THN).

i. For any of the body sections specified, all of the corresponding utilized body parameters must also be specified, i.e. as an example, if the aftcone section is specified, then θ_A (THA), R_A (RA), and R_{SB} (RSB) must also be specified. The body parameter R_B (RB) need not be specified unless a flare section is used.

j. For each body section specified, there must be a corresponding unit heat shield and structure weight. These are specified in the arrays WHSD and WSTR in the same order as the section appears in SECTN.

k A total vehicle entry weight W_e (WE) must always be input

l. A set of computer input forms are provided for the user. All the data shown on the form is keypunched when the variable is supplied

2. Descent System

a. Each of the three options are individually specified by utilizing the sentinel DESSYS:

1)	Two-chute drogue-main option	DESSYS = 1.
2)	Single-chute main option	DESSYS = 2.
3)	Drogue-retrorocket option	DESSYS = 3.

b. When to jettison the heat shield and structure in the two chute drogue-main system and single chute system is specified by the sentinel JET:

1)	Jettisoning at main chute deployment	JET = 1.
2)	Jettisoning just prior to impact	JET = 2.

c. Drag coefficients of the vehicle (CDV), drogue chute (CDD), and the main chute (CDMC) are input as a function of Mach number. As an example·

MACH = 0.0, 3.0, 5.0

CDV = 1.0, 1.5, 1.6

CDD = 0.7, 0.8, 0.9

CDMC = 0.6, 0.6, 0.6 .

d. The parameters used for calculating the atmosphere and/or trajectory are input for all options. These parameters list nine and are GSL, TSL, TST, RHØSL, FALR, XN, XØ, XC, and XA.

e. The main chute trajectory for DESSYS Options 1. and 2. is calculated based on a required vertical input descent velocity (VV). The horizontal wind velocity component, however, is not accounted for.

f. The retrorocket system is designed on a specified input velocity (VIMP). Horizontal wind velocity can be accounted for by the input (VELW). The input (VV) is not an input for this option.

g. The minimum size drogue chute input DDMIN must be specified for the drogue-main option and the drogue-retro option. There is no requirement as to how small or how big this input should be. Note however, if a smaller drogue is actually required (in the drogue-main option), the minimum input value is utilized.

h. The minimum drogue diameter input DDMIN is the actual size of the drogue chute for the drogue-retrorocket option. There is no iteration involved in this option.

i. The minimum size main chute input DMCMIN must be specified for the drogue-main option and the single main chute option. There is no requirement as to how small this input should be. Note however, if a smaller main chute is actually required (for either option), the minimum input value is utilized.

j. The maximum size main chute input DMCMAX must be specified for the drogue-main option and the single main option. If the first pass design requires a chute which exceeds DMCMAX, then a cluster of chutes will automatically be employed. Note, DMCMAX must be greater than DMCMIN.

k. Additional specific inputs to be specified for the retrorocket are as follows: ISP, MR, RHØRØC, VIMP, VELW, LRDR, and DLVFAC.

l. Parachute data suitable for input are given in References 2 and 3.

3. Impact Attenuation System

a. Each of the two options are individually specified by utilizing the sentinel IMPSYS:

1) Lenticular option IMPSYS = 1.

2) Cone-cylinder option IMPSYS = 2.

b. A sphere can be utilized as the lander in the lenticular option by specifying θ_M (THM) as 90 degrees.

c. The cone portion of the internal payload can be deleted in the cone-cylinder option by specifying L_{co}/R_{co} (LCØRCØ) as zero.

d. The cylinder portion of the internal payload can be deleted in the cone-cylinder option by specifying L_{cyl}/R_{co} (LCYRCØ) as zero.

e. If it is desired to neglect the anistropy of the crushable material, merely set a_0 (AØ), a_2 (A2), and a_3 (A3) equal to zero.

f. The specified input value of θ_M (THM) cannot exceed 90 degrees.

g. The specified input value of L_{co}/R_{co} (LCØRCØ) must be equal to or less than cot θ_{co}.

h. The inputs for the crushing stress PSI and ALPHA, relate the stress to the density as

$$S_m = [(ALPHA)\ \rho_c]^{1/PSI}$$

where (S_m) is the maximum crushing stress, (ρ_c) is the density in slug-ft^3, and ALPHA and PSI are empirical constants. A summary of crushup data[1] is given in Figure 6, from which the following correlations for ALPHA and PSI occur:

MATERIAL	ALPHA	PSI
Al Honeycomb	2090	0.554
Plastic Foams	3980	0.662
Balsa Wood	1.65×10^{10}	1.81

4. Lander Packaging Design

a. Additional required inputs for the lander packaging design are as follows: THS, XCGMIN, RCHUTE, EF, RHØF, TFMIN, and SIGCYF.

C. OUTPUT DEFINITIONS

External Name	Internal Name	Symbol	Parameter	Units
AD	AD	A_D	Area of drogue chute.	ft^2
ALT	Z	Z	Altitude.	feet

1945

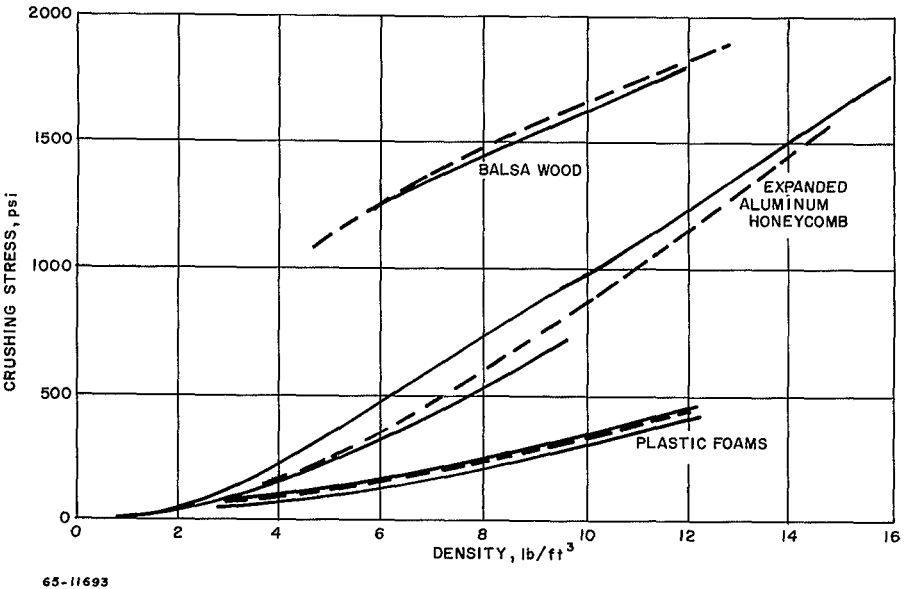

Figure 6 CRUSHING STRENGTH OF IMPACT MATERIALS

External Name	Internal Name	Symbol	Parameter	Units
AMC	AMC	A_{MC}	Main chute area.	ft^2
AREA	AREA	A	Area.	ft^2
DELXF		Δx_f	Distance between vehicle nose and payload nose.	feet
DD	DI	D_D	Diameter of drogue chute.	feet
DMC	DMC	D_{MC}	Diameter of main chute.	feet
DR	DR	D_R	Diameter of retrorocket.	feet
GAMMA	GAM	γ	Flight path angle.	degrees
GPEAK	PGCALC		Maximum value from PGCAL array.	g
GPEAKS	PGCAL		Array of impact acceleration values.	g
IX	RØLL	I_x	Moment of inertia about the x-axis.	$slug\text{-}ft^2$
IXTØTCG			Roll moment of inertia of the entire vehicle about the c.g.	$slug\text{-}ft^2$
IY	PITCH	I_y	Moment of inertia about the y-axis.	$slug\text{-}ft^2$
IYTØTCG			Pitch moment of inertia of the entire vehicle about the c.g.	$slug\text{-}ft^2$
LCØ		L_{co}	Length in the internal payload cone.	feet
LCYL		L_{cyl}	Length in the internal payload cylinder.	feet
LR	XLR	L_R	Length of retrorocket.	feet

External Name	Internal Name	Symbol	Parameter	Units
MACH.	XMAC	M	Mach number.	--
MC		m_c	Mass of the crushable material.	slugs
MI		m_i	Mass of the internal payload.	slugs
PD	PD	P_D	Opening shock load on drogue chute.	pounds
PMC	PMC	P_{MC}	Opening shock load on main chute.	pounds
R	R	r	Ordinates of all points computed along the body surface.	feet
R		R	Small radius of the internal payload cone.	feet
R1		R_1	Inner radius of the crushup segment.	feet
R2		R_2	Outer radius of the crushup segment.	feet
RCØ			Internal payload cylinder radius.	feet
RHØC		ρ_c	Density of the crushable material utilized.	$slug/ft^3$
S		S_m	Maximum crushing stress.	lb/ft^2
SECTIØN			Section specification number.	--
T	T	t_o	Total time of descent system trajectory.	seconds
T		t_c	Thickness of crushup material.	feet

External Name	Internal Name	Symbol	Parameter	Units
TD	T	t_D	Total time on the drogue chute.	seconds
TF	TF		Main chute filling time.	seconds
TIME	T		Time.	seconds
T(INS)			Thickness of the internal structure face sheet.	inches
VEL	V	V	Velocity.	ft/sec
VFINAL	VFINAL	V_o	Final resultant descent velocity for the drogue retro system.	ft/sec
W(LBS)			Itemized section weights of the internal structure.	pounds
W INTERNAL STRUCTURE			Total weight of the internal structure.	pounds
WD	WD	W_D	Drogue chute system weight.	pounds
WF	WF	W_F	Final weight for sizing retro system.	pounds
WHS	WHS		Unit weight heat shield factor times area.	pounds
WI	WI	W_{II}	Initial weight for sizing retro system.	pounds
WL	WL	W_L	Landed weight.	pounds
WMC	WMC	W_{MC}	Main chute system weight.	pounds
WST	WST		Unit weight structure (includes weight factor)	pounds

External Name	Internal Name	Symbol	Parameter	Units
WR	WR	W_{RR}	Entry weight less heat shield and structure weight.	pounds
WRØC	WRØC	W_R	Retrorocket system weight.	pounds
WHSTØT	WHSTØT		Total heat shield weight.	pounds
WSTTØT	WSTTØT		Total structural shell weight.	pounds
WSTRAPS	WSTRAP	W_{STRAPS}	$0.05(W_D + W_{MC})$.	pounds
X	X	X	Abscissas of all points computed along the body surface.	feet
XCGH/S	XCGH/S		C.g. position of the heat shield and structural shell.	feet
XCG	XCG	$\bar{X}_{NN}$	Centroid of each section from the nose of the vehicle.	feet
XCGØ		X_{CG_o}	Total vehicle center of gravity measured from vehicle nose.	feet
YDD/G	PGCALC	$\dot{y}_{imp}$	Peak impact acceleration.	g
Y/R2 VALUES	YR2	y/R_2	Nondimensional parameter.	

D. SAMPLE PROBLEM

1. Statement of Problem

Determine the residual weight for the blunt cone configuration used in the sample problems of Programs 1880, 1881, 1884, and 1886.

The descent system is to utilize a single main chute system. The chute is to be deployed at Mach 1.2 at an altitude of 21451. feet and a flight path angle of -35.19 degrees. The heat shield and structure is to be jettisoned at its deployment. Vertical impact velocity is to be 60 ft/sec.

The lander geometry is to be a spherical shape utilizing balsa wood as the crushable material. The horizontal wind velocity is 30 ft/sec and the maximum impact acceleration is not to exceed 1000 g. The balsa density cannot exceed 0.4 slug/ft^3 or be less than 0.1 slug/ft^3.

The internal payload is to have a packaging density of 1.5 slug/ft^3, and the parachute system packaging density is 35 lb/ft^3. Internal structure is to be constructed of aluminum face sheet with a minimum thickness of 0.010 inch. Final design is to have a maximum center of gravity position of 3.75 feet.

2. Input Form

The input data required is shown on the following pages. Decimals are used for all input and all the variable names are keypunched wherever an input quantity is given. An additional unused input form is provided in the following page for the program user.

3. Output

The output is shown on the following pages. The keypunched data are listed and should be verified with the input form.

The vehicle coordinates (X,R) are provided for use in drawing the configuration. Detailed section data are given regarding the surface area, heat shield weight, structure weight, moments of inertia, and center of gravity. The coordinates refer to the exterior of the structural shell and are used to evaluate all the weights by considering that the thicknesses of the structure and heat shield are small with respect to the size of the vehicle.

The heat shield and structural weights for the individual sections are totaled and the remaining weight (WR) is given. The overall center of gravity of the heat shield and structure is also given.

The trajectories during descent on the drogue and main chutes are given, including velocity, Mach number, flight path angle, altitude, and density. The parachute designs are given in terms of their area, diameter, and weight. Other pertinent information is given, including the parachute filling time, opening shock load, and the dynamic pressure at chute deployment. The number of clustered chutes required for the main system is also given, as well as the estimated parachute harness weight and the landed weight (WL).

The impact attenuator design results indicate the density of the attenuator material, the peak deceleration, the crush up stroke and history of deceleration versus stroke. The size of the impact attenuator, the mass of crush-up, and the residual mass are determined. Details of the internal structure are also provided.

The overall vehicle center of gravity and moments of inertia are finally determined and given as output.

RAD 2 0963
5 63

DIGITAL COMPUTER INPUT REQUEST FORM	PROBLEM NO 1882	PROGRAMMER
	TITLE Packaging and Moments of Inertia	

MEMO NO	SECTION NO	WORK ORDER NO	(E240 USE ONLY)	REQUESTED BY	EXT	EST TIME	PAGE 1 OF 3 PAGES

$INPUT

ALPHA	=	_____,	ISP	=	_____,	STRFAC	=	_____,
A0	=	_____,	IYR2	=	_____,	TFMIN	=	_____,
A1	=	_____,	JET	=	_____,	THA	=	_____,
A2	=	_____,	LC	=	_____,	THB	=	_____,
A3	=	_____,	LCØRCØ	=	_____,	THC	=	_____,
BETA	=	_____,	LCYRCØ	=	_____,	THCØ	=	_____,
DELTA	=	_____,	LRDR	=	_____,	THM	=	_____,
DELMIT	=	_____,	MACD	=	_____,	THN	=	_____,
DLVFAC	=	_____,	MACMC	=	_____,	THS	=	_____,
DESSYS	=	_____,	MCVEL	=	_____,	TH2G	=	_____,
DDMIN	=	_____,	MR	=	_____,	TH3G	=	_____,
DMCMIN	=	_____,	PSI	=	_____,	TN	=	_____,
DMCMAX	=	_____,	RA	=	_____,	TSL	=	_____,
DRVEL	=	_____,	RB	=	_____,	TST	=	_____,
EF	=	_____,	RC	=	_____,	TZERØ	=	_____,
EPSILN	=	_____,	RCHUTE	=	_____,	VELW	=	_____,
EPS1	=	_____,	RHØCM	=	_____,	VIMP	=	_____,
EPS3	=	_____,	RHØCMI	=	_____,	VV	=	_____,
FACTØR	=	_____,	RHØF	=	_____,	WE	=	_____,
FALR	=	_____,	RHØI	=	_____,	XA	=	_____,
FREQ	=	_____,	RHØRØC	=	_____,	XC	=	_____,
FREQ2	=	_____,	RHØSL	=	_____,	XCGMIN	=	_____,
FREQ3	=	_____,	RN	=	_____,	XD	=	_____,
GAMD	=	_____,	RSB	=	_____,	XMC	=	_____,
GAMMC	=	_____,	RSC	=	_____,	XN	=	_____,
GIMP	=	_____,	RSN	=	_____,	XØ	=	_____,
GSL	=	_____,	RT	=	_____,	ZD	=	_____,
IMPSYS	=	_____,	SIGGYF	=	_____,	ZMC	=	_____,

NRINGS = _____,

DNBND = _____, _____, _____,

UPBND = _____, _____, _____,

SECTN = _____, _____, _____, _____, _____, _____, _____, _____, _____, _____,

WHSD = _____, _____, _____, _____, _____, _____, _____, _____, _____, _____,

WRING = _____, _____, _____, _____, _____, _____, _____, _____, _____, _____,

WSTR = _____, _____, _____, _____, _____, _____, _____, _____, _____, _____,

XRING = _____, _____, _____, _____, _____, _____, _____, _____, _____, _____,

RR = _____, _____, _____, _____, _____, _____, _____, _____, _____, _____,
_____, _____, _____, _____, _____, _____, _____, _____, _____, _____,
_____, _____, _____, _____, _____,

XX = _____, _____, _____, _____, _____, _____, _____, _____, _____, _____,
_____, _____, _____, _____, _____, _____, _____, _____, _____, _____,
_____, _____, _____, _____, _____,

CDD = _____, _____, _____, _____, _____, _____, _____, _____, _____, _____,
_____, _____, _____, _____, _____, _____, _____, _____, _____, _____,
_____, _____, _____, _____, _____, _____, _____, _____, _____, _____,
_____, _____, _____, _____, _____, _____, _____, _____, _____, _____,
_____, _____, _____, _____, _____, _____, _____, _____, _____, _____,

CDMC = _____, _____, _____, _____, _____, _____, _____, _____, _____, _____,
_____, _____, _____, _____, _____, _____, _____, _____, _____, _____,
_____, _____, _____, _____, _____, _____, _____, _____, _____, _____,
_____, _____, _____, _____, _____, _____, _____, _____, _____, _____,
_____, _____, _____, _____, _____, _____, _____, _____, _____, _____,

RAD 2 0964
5-63

DIGITAL COMPUTER INPUT REQUEST FORM	PROBLEM NO. 1882	MEMO NO	SECTION NO	CONTINUATION SHEET PAGE 3 OF 3 PAGES

CDV = ____, ____, ____, ____, ____, ____, ____, ____, ____, ____,
____, ____, ____, ____, ____, ____, ____, ____, ____, ____,
____, ____, ____, ____, ____, ____, ____, ____, ____, ____,
____, ____, ____, ____, ____, ____, ____, ____, ____, ____,
____, ____, ____, ____, ____, ____, ____, ____, ____, ____,

MACH = ____, ____, ____, ____, ____, ____, ____, ____, ____, ____,
____, ____, ____, ____, ____, ____, ____, ____, ____, ____,
____, ____, ____, ____, ____, ____, ____, ____, ____, ____,
____, ____, ____, ____, ____, ____, ____, ____, ____, ____,
____, ____, ____, ____, ____, ____, ____, ____, ____, ____,

$

RE-ORDER No. 66-411

RAD 2-0063 8-63

DIGITAL COMPUTER INPUT REQUEST FORM	PROBLEM NO 1882	PROGRAMMER
	TITLE Packaging and Moments of Inertia	

MEMO NO	SECTION NO	WORK ORDER NO	(E240 USE ONLY)	REQUESTED BY	EXT	EST TIME	
	K420	W305-050-0005		P. Levine	2996		PAGE 1 OF 3 PAGES

$INPUT

ALPHA	= 1.65E10 ,	ISP	= ,	STRFAC	= 1.5 ,
A0	= 1.0 ,	IYR2	= 0.4 ,	TFMIN	= 0.010 ,
A1	= ,	JET	= 1.0 ,	THA	= -80. ,
A2	= ,	LC	= 0. ,	THB	= ,
A3	= ,	LCØRCØ	= ,	THC	= 60.0 ,
BETA	= 0. ,	LCYRCØ	= ,	THCØ	= ,
DELTA	= .01 ,	LRDR	= ,	THM	= 90.0 ,
DELMIT	= 1.E-5 ,	MACD	= ,	THN	= 60.0 ,
DLVFAC	= ,	MACMC	= 1.2 ,	THS	= 0.2 ,
DESSYS	= 2.0 ,	MCVEL	= 50. ,	TH2G	= 0. ,
DDMIN	= ,	MR	= ,	TH3G	= 0. ,
DMCMIN	= 10.0 ,	PSI	= 1.81 ,	TN	= 2.1 ,
DMCMAX	= 80.0 ,	RA	= 0. ,	TSL	= 200.0 ,
DRVEL	= 50.0 ,	RB	= 0. ,	TST	= 100.0 ,
EF	= 1.0E7 ,	RC	= 7.5 ,	TZERØ	= ,
EPSILN	= 0.75 ,	RCHUTE	= 35.0 ,	VELW	= 30.0 ,
EPS1	= .001 ,	RHØCM	= 0.40 ,	VIMP	= ,
EPS3	= .001 ,	RHØCMI	= 0.1 ,	VV	= 60.0 ,
FACTØR	= .2 ,	RHØF	= 172. ,	WE	= 1850. ,
FALR	= 1.11367 ,	RHØI	= 1.5 ,	XA	= 0. ,
FREQ	= .5 ,	RHØRØC	= ,	XC	= .999 ,
FREQ2	= 2. ,	RHØSL	= 2.56E-5 ,	XCGMIN	= 3.75 ,
FREQ3	= 2. ,	RN	= 1.25 ,	XD	= ,
GAMD	= ,	RSB	= 0.15 ,	XMC	= 1.8 ,
GAMMC	= -35.19 ,	RSC	= 0.15 ,	XN	= .001 ,
GIMP	= 1000.0 ,	RSN	= 0. ,	XØ	= 0. ,
GSL	= 12.3 ,	RT	= 3.75 ,	ZD	= ,
IMPSYS	= 1.0 ,	SIGCYF	= 6.0E4 ,	ZMC	= 21451. ,

RE-ORDER No. 66-47

RAD 2-0964 S 63

DIGITAL COMPUTER INPUT REQUEST FORM	PROBLEM NO	MEMO NO	SECTION NO	CONTINUATION SHEET
	1882			PAGE 2 OF 3 PAGES

NRINGS = ____,

DNBND = ____, ____, ____,

UPBND = ____, ____, ____,

SECTN = 1.0, 3.0, 6.0, 10.0, 11.0, 13.0, ____, ____, ____, ____,

WHSD = 1.0, .94, .94, .94, ____, ____, ____, ____, ____, ____,

WRING = ____, ____, ____, ____, ____, ____, ____, ____, ____, ____,

WSTR = .507, .526, .526, .526, .405, .414, ____, ____, ____, ____,

XRING = ____, ____, ____, ____, ____, ____, ____, ____, ____, ____,

RR = ____, ____, ____, ____, ____, ____, ____, ____, ____, ____,
____, ____, ____, ____, ____, ____, ____, ____, ____, ____,
____, ____, ____, ____, ____,

XX = ____, ____, ____, ____, ____, ____, ____, ____, ____, ____,
____, ____, ____, ____, ____, ____, ____, ____, ____, ____,
____, ____, ____, ____, ____,

CDD = ____, ____, ____, ____, ____, ____, ____, ____, ____, ____,
____, ____, ____, ____, ____, ____, ____, ____, ____, ____,
____, ____, ____, ____, ____, ____, ____, ____, ____, ____,
____, ____, ____, ____, ____, ____, ____, ____, ____, ____,
____, ____, ____, ____, ____, ____, ____, ____, ____, ____,

CDMC = 0.8, 0.8, 1.0, 1.0, 1.0, ____, ____, ____, ____, ____,
____, ____, ____, ____, ____, ____, ____, ____, ____, ____,
____, ____, ____, ____, ____, ____, ____, ____, ____, ____,
____, ____, ____, ____, ____, ____, ____, ____, ____, ____,
____, ____, ____, ____, ____, ____, ____, ____, ____, ____,

193

RAD 2-0964
5-63

DIGITAL COMPUTER INPUT REQUEST FORM	PROBLEM NO	MEMO NO	SECTION NO	CONTINUATION SHEET
	1882			PAGE 3 OF 3 PAGES

CDV = 1.0, 1.0, 1.2, 1.5, 1.5, , , , , ,
, , , , , , , , , ,
, , , , , , , , , ,
, , , , , , , , , ,
, , , , , , , , , ,

MACH = 0.0, 0.7, 1.0, 2.0, 6.0, , , , , ,
, , , , , , , , , ,
, , , , , , , , , ,
, , , , , , , , , ,
, , , , , , , , , ,

$

```
                                                                                  12/01/64

$IBLDR S2BLK                                                        12/01/64    S2BL0000
$IBLDR S3BLK                                                        12/01/64    S3BL0000
$IBLDR SARTLU                                                       12/01/64    SART0000
$IBLDR SRP346                                                       12/01/64    SRP30000
$IBLDR SGENSH                                                       12/01/64    SGEN0000
$IBLDR STENSH                                                       12/01/64    STEN0000
$IBLDR SFINDR                                                       12/01/64    SFIN0000
$IBLDR SDERQ2                                                       12/01/64    SDER0000
$IBLDR SADAMS                                                       12/01/64    SADA0000
$IBLDR SPEAK                                                        12/01/64    SPEA0000
$IBLDR SR2B3                                                        12/01/64    SR2B0000
$IBLDR SBL3IN                                                       12/01/64    SBL30000
$IBLDR SR2B34                                                       12/01/64    SR2B0000
$IBLDR SATMOS                                                       12/01/64    SATM0000
$DATA

                IBLDR                                                             12/01/64

                          * MEMORY MAP *

SYSTEM                                  00000 THRU  02717
FILE BLOCK ORIGIN                       02720
FILES        1.      UNIT05
             2.      UNIT06
FILE LIST ORIGIN                        02750
PRE-EXECUTION INITIALIZATION            02754
CALL ON OBJECT PROGRAM                  02777
OBJECT PROGRAM                          03004 THRU  60547

      DECK  ORIGIN      CONTROL SECTIONS (/NAME/=NON 0 LENGTH, (LOC)=DELETED, *=NOT REFERENCED)

  1. 1882    03004      ///     /(77434)    ......  12246 *
  2. S2BLK   12262      ///     /(77434)    BLOCK2  16265
  3. S3BLK   16766       BLOCK3  25624
  4. SARTLU  26462       ARTLU   27704
  5. SRP346  27355       RP3467  27757
  6. SGENSH  30027       GENSHP  30437
  7. STENSH  30545       TENSHL  31367
  8. SFINDR  31533       FINDRV  32505
  9. SDERQ2  32704      ///     /(77434)    DERQ2   33253
 10. SADAMS  33305       ADAMS4  36450
 11. SPEAK   36610       PEAK    37055
 12. SR2B3   37140       R2B3    37343
 13. SBL3IN  37402       BL3INT  40031
 14. SR2B34  40141       R2B34   40724
 15. SATMOS  41112       ATMOS   41374
 16. .LXCON  41505       .LXSTR  41505 *   .LXSTP  41511     .LXOUT  41557     .LXRTN  41571     IBEXIT  41571 *
                         .LXCAL  41574 *   .LXFRR  41574     .DBCLS  41756 *   .LXARG  42125     .LO     42150 *
                         .CLSF   42156     .LFBL   42157 *   .LUNB   42150     .DFOUT  42161
 17. .IODEF  42165       .DFFIN  42165     .ATTAC  42171 *   .CLOSE  42173     .OPEN   42175     .READ   42177
                         .WRITE  42201     .BSR    42211 *   .READR  42221     .RELES  42223 *   .LAREA  42235
                         .LFBLK  42252     .LTSX   42255 *   .AREA1  42267     .LUNBL  42275     .ENTRY  42301
                         .GOA    42334     .GO     42340     .DERR   42354     .NOPXT  42355     .COMXT  42357
                         .EX34   42401
 18. .LXSL   42406       .LXSFL  42406     LXCSEL  42407     .LXTST  42412 *   .LXOVL  42452 *   .LXRCT  42463 *
                         .LXIND  42532 *   .LXDIS  42535 *   .LXFLG  42536 *   .LTCH   42537
 19. .FPTRP  42545       .FFPT.  42545 *   .FPOUT  42674     .FPARG  42702     /.COUNT/ 42704 *   OVFLOW  42750 *
 20. .ERAS.  42755       E.1     42755     E.2     42756     E.3     42757     E.4     42760
 21. .XCC.   42761       CC.1    42761     CC.2    42762     CC.3    42763     CC.4    42764
 22. XIT     42765       EXIT    42765     EXIT.   42765 *
 23. FXFM    42766       .FXFM.  42766     .FXOUT  43323     .FXARG  43331     /.OPTW./ 43405
 24. FOUT    43416       .FOUT.  43416
 25. FCNV    43760       .FCON.  43760     .FCNV.  44003     .ENDFS  44016     .CNVSW  44020 |   .FDX1   44024
                         .FDX2   44025     .DBC    44027     .DBCB   44150     .DBC9   44153 |   .DBC10  44160
                         DBC20   44206     DDSW    44216     .DDFIX  44225     .FIXSW  44233     .DDBC   44310
                         .DDRS1  44552     .DDRS2  44564     .D1     44557     .D2     44571     .FFRP2  44656 *
                         .ANPT   44712     .ONPT   44727     .LNTP   45003     .AOUT   45052     .DFLT   45070
                         .FLT    45224     .DEXPN  45314     .FXD    45315     .HOUT   45445     .INTG   45515
                         .LOUT   45633     .OOUT   45652     .XCF    45703     .TEST   46410     .KOUNT  46413
                         .LIST   46416     .DONE   46427     .OUTBF  46473     .BJF    46521     .QSTO   46522
                         .WIDTH  46523     .GAIN   46524     .GAINL  46525     .FBDBF  46535     .DDDFL  46560
                         .DDFLG  46561     MOD     46562     .PEX    46553     FEXP    46564     .DIG    46565
 26. FIOS    46605       .FIOS.  46605     .FSEL.  46745     .FILR.  46751     .FRTB.  46760 *   .FRTD.  46765
                         .FILL.  46770     .FCLS   46772 *   .FOPN   46776 *   REOF    47002 *   .TOUT.  47145
```

```
                                .REED   47153 *   .BIN    47154 *   .FCT    47155     .FCKSZ  47157 *
 27. FIOH    47241              .FIOH.  47241     .FFIL.  50030     .FRTN.  50055 *
 28. FWRO    50242              .FWRO.  50242
 29. FWRU    50266              .FWRU.  50266
 30. FWRO    50312              .FWRO.  50312     .FREST  50615 *
 31. FRDU    50717              .FRDU.  50717
 32. UN05    50760              .UN05.  50760
 33. UN06    50761              .UN06.  50761     .BUFS7  50762
 34. FIOU    50765              .FIOU.  50765     .CTUIO  51440     .NMLST  51453     .NAME.  52566     .INTAP  52567
 35. JASIN   53212              ASINR   53272 *   ASIN    53301     ASIND   53310 *
 36. JACOS   53317              ACOSR   53377 *   ACOS    53406     ACOSD   53415 *
 37. JTNOR   53424              ATANOR  53502     ATANQ   53511 *   ATANQD  53520 *
 38. JRSIM   53527              ARSIMP  53570
 39. FLOG    53621              ALOG10  53621 *   ALOG    53623
 40. FXPF    53762              EXP     53762
 41. FSCN    54102              COS     54102     SIN     54104
 42. FSQR    54313              SQRT    54313
 43. FATN    54420              ATAN2   54420     ATAN    54422 *
 44. FXP3    54626              .XP3.   54626
 45. .IOCS   54753              .LIO)   54753     .MONSW  54773     .TEOR   55042     .DEFI.  55122     .JOINX  55166 *
                                .CLOS.  55205     .ATTC.  55220     .SH1    55432 *   .SH9    55474 *   .OPEN.  55515
                                .OP4    55543 *   .OP7    55574 *   .OP9.2  55610 *   .RLSE.  55662     .RFR2.  55662
                                .RFAO.  55663     .RERI.  55706     .WRIT.  55713     .WNTIA  56076 *   .EOFFX  56157 *
                                .FFFIT  56227     .GTIOX  56250     .RWT    56356 *   .RET    57005 *   .ENDTR  57446
                                .SELS9  57450 *   .BSR.   60061     .FOTOF  60206     .ETOF3  60214 *   .SWITC  60243
                                .TCHEX  60544     .BASIO  60547 *
 46. .IOCSM  60550
 47. //      77434

I/O BUFFERS                                  60550 THRU  77333

UNUSED CORE                                  77334 THRU  77433

$INPUT

SECTN  =          0.10000000E 01,     0.30000000E 01,     0.60000000E 01,     0.10000000E 02,     0.11000000E 02,
                  0.13000000E 02,     0.00000000E-38,     0.00000000E-38,     0.00000000E-38,     0.00000000E-38,

RN     =          0.12500000E 01,

RSN    =          0.00000000E-38,

RSC    =          0.15000000E 00,

RSB    =          0.15000000E 00,

RA     =          0.00000000E-38,

THN    =          0.60000000E 02,

THC    =          0.60000000E 02,

THB    =          0.00000000E-38,

THA    =         -0.90000000E 02,

XX     =          0.00000000E-38,     0.00000000E-38,     0.00000000E-38,     0.00000000E-38,     0.00000000E-38,
                  0.00000000E-38,     0.00000000E-38,     0.00000000E-38,     0.00000000E-38,     0.00000000E-38,
                  0.00000000E-38,     0.00000000E-38,     0.00000000E-38,     0.00000000E-38,     0.00000000E-38,
                  0.00000000E-38,     0.00000000E-38,     0.00000000E-38,     0.00000000E-38,     0.00000000E-38,
                  0.00000000E-38,     0.00000000E-38,     0.00000000E-38,     0.00000000E-38,     0.00000000E-38,

RR     =          0.00000000E-38,     0.00000000E-38,     0.00000000E-38,     0.00000000E-38,     0.00000000E-38,
                  0.00000000E-38,     0.00000000E-38,     0.00000000E-38,     0.00000000E-38,     0.00000000E-38,
                  0.00000000E-38,     0.00000000E-38,     0.00000000E-38,     0.00000000E-38,     0.00000000E-38,
                  0.00000000E-38,     0.00000000E-38,     0.00000000E-38,     0.00000000E-38,     0.00000000E-38,
                  0.00000000E-38,     0.00000000E-38,     0.00000000E-38,     0.00000000E-38,     0.00000000E-38,

LC     =          0.00000000E-38,

RB     =          0.00000000E-38,

RC     =          0.75000000E 01,

RT     =          0.37500000E 01,

BETA   =          0.00000000E-38,

TH2G   =          0.00000000E-38,

TH3G   =          0.00000000E-38,

WHSD   =          0.10000000E 01,     0.94000000E 00,     0.94000000E 00,     0.94000000E 00,     0.00000000E-38,
                  0.00000000E-38,    -0.00000000E-19,    -0.00000000E-19,    -0.00000000E-19,    -0.00000000E-19,

WSTR   =          0.50700000E 00,     0.52600000E 00,     0.52600000E 00,     0.52600000E 00,     0.40500000E 00,
                  0.41400000E 00,    -0.00000000E-19,    -0.00000000E-19,    -0.00000000E-19,    -0.00000000E-19,

STRFAC =          0.15000000E 01,

WE     =          0.18500000E 04,

JET    =          0.10000000E 01,
```

MACD	=	-0.00000000E-19,				
ZD	=	-0.00000000E-19,				
GAMD	=	-0.00000000E-19,				
CDD	=	-0.04046848E-26,	-0.04046847E-26,	0.20599710E-24,	-0.00007880E-26,	0.20780487E-24,
		0.49963344E 00,	-0.00007880E-26,	0.00080777E-23,	-0.00000020E-26,	0.20780487E-24,
		0.49938931E 00,	0.33135625E-23,	-0.70535601E-37,	0.10164460E-19,	0.00012614E-25,
		0.13585490E-19,	0.00114795E-38,	-0.47319780E-37,	0.00114797E-38,	-0.70529706E-37,
		0.00028629E-38,	0.00000036E-26,	0.04144116E-23,	0.00000565E-38,	0.16181135E-25,
		0.00307878E-26,	0.31554578E-29,	0.10359927E-24,	-0.00000362E-36,	0.04417637E-27,
		0.47111610E-37,	0.00028638E-38,	0.00080780E-24,	0.00028622E-38,	0.13579004E-19,
		-0.70535601E-37,	0.13578998E-19,	-0.33167972E-23,	0.18844881E-36,	0.00000023E-38,
		0.16940659E-20,	0.00007877E-26,	0.10359941E-24,	0.13578997E-19,	0.33167983E-23,
		0.00031515E-26,	0.00172032E-19,	-0.33103371E-23,	-0.20587583E-23,	0.00000565E-38,
XD	=	-0.00000000E-19,				
MACMC	=	0.12000000E 01,				
ZMC	=	0.21451000E 05,				
CDMC	=	0.80000000E 00,	0.80000000E 00,	0.10000000E 01,	0.10000000E 01,	0.10000000E 01,
		0.18844998E-36,	0.16181135E-25,	0.00080781E-24,	0.12621977E-27,	0.41439810E-24,
		0.00028630E-38,	0.00000000E-38,	0.00000000E-38,	-0.00000000E-37,	0.03673470E-38,
		-0.11513579E 24,	0.00000000E-37,	0.26864381E-14,	-0.00119114E-19,	-0.06095238E 02,
		-0.06095238E 02,	0.21079701E-35,	-0.17220459E-27,	-0.94603335E-26,	-0.89297371E 06,
		0.00000000E-38,	0.00000000E-38,	0.00000000E-38,	0.00000000E-38,	0.00000000E-38,
		0.00000000E-38,	-0.00000036E-19,	0.00010474E-10,	-0.00121962E-38,	-0.01483510E-19,
		0.00000036E-19,	0.00000036E-19,	0.00000000E-38,	0.00000000E-38,	0.00000000E-38,
		0.00000000E-38,	0.00000000E-38,	0.00000000E-38,	0.00000000E-38,	0.00000000E-38,
		0.00000000E-38,	0.00000000E-38,	0.00000000E-38,	0.00000000E-38,	0.00000000E-38,
XMC	=	0.18000000E 01,				
CDV	=	0.10000000E 01,	0.10000000E 01,	0.12000000E 01,	0.15000000E 01,	0.15000000E 01,
		-0.35764838E-37,	-0.00047903E-31,	-0.04046816E-26,	0.08279875E-23,	0.00007851E-26,
		-0.47025514E-37,	0.00007853E-26,	0.10359898E-24,	0.00095131E-24,	-0.00008056E-23,
		0.49841258E 00,	0.13571695E-19,	0.13579000E-19,	0.00031515E-26,	0.00028615E-38,
		0.00015777E-26,	-0.00001985F-31,	0.08312195E-23,	0.33119475E-23,	0.33135631E-23,
		0.12943596E-25,	0.13565698E-19,	0.20687552E-23,	0.33881318E-20,	0.13559145E-19,
		0.13571696E-19,	-0.00061630E-29,	0.04176292E-23,	-0.00007860E-26,	0.00080777E-23,
		-0.00015777E-26,	-0.00048089E-31,	-0.20000001E-20,	0.00028605E-38,	-0.00050335F 19,
		0.00007878E-26,	0.31554578E-29,	0.00018313E-36,	0.04143971E-23,	0.00317302E 00,
		0.49938915E 00,	0.00018313E-36,	0.03388132E-19,	-0.00048091E-31,	-0.00018310E-36,
GSL	=	0.12000000E 02,				
VV	=	0.60000000E 02,				
DESSYS	=	0.20000000E 01,				
XN	=	0.10000000E-02,				
XO	=	0.00000000E-38,				
XC	=	0.99000000E 00,				
XA	=	0.00000000E-38,				

198<

```
TSL     =        0.20000000E 03,
TST     =        0.10000000E 03,
RHOSL   =        0.25600000E-04,
FALR    =        0.11136700E 01,
ISP     =       -0.00000000E-19,
MR      =       -0.00000000F-19,
RHOROC  =       -0.00000000E-19,
VIMP    =       -0.00000000E-19,
LRDR    =       -0.00000000E-19,
DLVFAC  =       -0.00000000F-19,
TZERO   =        0.00000000F-38,
DELTA   =        0.10000000E-01,
UPBND   =        0.10000000F-01,      0.10000000E-04,      0.10000000E 00,
DNBND   =        0.10000000E-02,      0.10000000E-05,      0.10000000E-01,
FREQ    =        0.50000000E 00,
FACTOR  =        0.20000000E 00,
DELMIT  =        0.10000000E-04,
DMCMAX  =        0.80000000F 02,
MACH    =        0.00000000F-38,      0.70000000E 00,      0.10000000E 01,      0.20000000E 01,      0.60000000E 01,
                 0.00000986E-38,      0.33167918E-23,      0.33135606E-23,      0.33119474E-23,      0.00000110E-26,
                 0.10359951E-24,      0.00000281E-24,      0.16168513E-25,     -0.00091620E 19,     -0.00063110E-26,
                 0.00028537E-38,      0.18844866E-36,     -0.00000023E-38,      0.00063110F-26,      0.00028536E-38,
                 0.00007877E-26,      0.10380148E-24,      0.18844856E-36,     -0.00000023F-38,      0.00063110E-26,
                 0.00028541E-38,      0.10339781E-24,      0.00007888E-26,      0.10340039E-24,      0.13584931E-19,
                 0.13572358E-19,      0.33947493E-20,     -0.00030652E-29,      0.03975120E-29,      0.04136187F-23,
                 0.11858461F-19,     -0.00000001E-20,      0.01588642E-19,      0.26645677E-14,      0.33167960E-23,
                -0.00007328E-35,      0.04417637E-27,      0.00032080E-26,      0.00028619E-38,      0.00031514E-26,
                 0.00028579E-38,      0.12943596E-25,      0.00015777E-26,      0.04143971F-23,     -0.35276303F-37,
GAMMC   =       -0.35190000E 02,
DDMIN   =       -0.00000000E-19,
DRVEL   =        0.50000000E 02,
MCVEL   =        0.50000000E 02,
FREQ2   =        0.20000000E 01,
FRFQ3   =        0.20000000E 01,
DMCMIN  =        0.10000000E 02,
```

```
 RHOI   =      0.15000000E 01,
 RHOCM  =      0.40000000F 00,
 RHOCMI =      0.10000000E 00,
 ALPHA  =      0.16500000E 11,
 PSI    =      0.18100000E 01,
 EPSILN =      0.75000000E 00,
 THM    =      0.90000000E 02,
 VELW   =      0.30000000E 02,
 GIMP   =      0.10000000E 04,
 IMPSYS =      0.10000000F 01,
 LCORCO =      0.00000000F-38,
 LCYRCO =      0.00000000F-38,
 THCO   =      0.00000000E-38,
 AO     =      0.10000000E 01,
 A1     =     -0.00000000E-19,
 A2     =     -0.00000000E-19,
 A3     =     -0.00000000F-19,
 EPS1   =      0.10000000E-02,
 EPS3   =      0.10000000E-02,
 TN     =      0.21000000E 01,
 IYR2   =      0.40000000E 00,
 EF     =      0.10000000E 08,
 RHOF   =      0.17200000E 03,
 TFMIN  =      0.10000000E-01,
 SIGCYF =      0.60000000E 05,
 THS    =      0.20000000E 00,
 XCGMIN =      0.37500000E 01,
 RCHUTE =      0.35000000E 02,
 NRINGS =            0,
 XRING  =     -0.00000000E-19,    -0.00000000E-19,    -0.00000000E-19,    -0.00000000E-19,    -0.00000000E-19,
              -0.00000000E-19,    -0.00000000E-19,    -0.00000000E-19,    -0.00000000E-19,    -0.00000000E-19,
 WRING  =     -0.00000000E-19,    -0.00000000E-19,    -0.00000000E-19,    -0.00000000E-19,    -0.00000000E-19,
              -0.00000000E-19,    -0.00000000E-19,    -0.00000000E-19,    -0.00000000E-19,    -0.00000000E-19,
 $ END
```

	X COORDINATES		R COORDINATES
	0.0000E-39		0.0000E-39
	1.0694E-02		1.6316E-01
	4.2593E-02		3.2352E-01
	9.5151E-02		4.7835E-01
X1 =	1.6747E-01	R1 =	6.2500E-01
X3 =	4.0934E 00	R3 =	7.4250E 00
	4.1173E 00		7.4561E 00
	4.1484E 00		7.4799E 00
	4.1845E 00		7.4949E 00
X4 =	4.2234E 00	R4 =	7.5000E 00
	4.2747E 00		7.4910E 00
	4.3148E 00		7.4649E 00
	4.3533E 00		7.4250E 00
X8 =	4.3711E 00	R8 =	7.3760E 00
X9 =	5.0104E 00	R9 =	3.7500E 00
	5.0104E 00		2.8125E 00
	5.0104E 00		1.8750E 00
	5.0104E 00		9.3750E-01
X10 =	5.0104E 00	R10 =	0.0000E-39

SECTION	APEA FT2	WHS (LBS)	WST (LBS)	IX (SLUG-FT2)	IY	XCG (FT)
1	1.9193E 00	1.3153E 00	1.0003E 00	1.4395E-02	7.8704E-03	8.3734E-02
3	1.9857E 02	1.8666E 02	1.5668E 02	2.9628E 02	2.4116E 02	2.6832E 00
6	7.3766E 00	6.9340E 00	5.8201E 00	2.2147E 01	1.7904E 01	4.1518E 00
10	9.8114E 00	9.2227E 00	7.7412E 00	2.9316E 01	2.4463E 01	4.3119E 00
11	1.2870E 02	0.0000E-39	7.8184E 01	8.3201E 01	9.6595E 01	4.6560E 00
13	4.4179E 01	0.0000E-39	2.7435E 01	5.3963E 00	2.4408E 01	5.0104E 00

TOTAL HEAT SHIELD - STRUCTURE RESULTS

WHSTOT = 2.0413E 02 WR = 1.3690E 03
WSTTOT = 2.7768E 02 XCGH/S = 3.2205E 00

TEMP	VEL	MACH	GAMMA	ALT	RHO

UNDRFLOW AT 27146 IN MO

UNDRFLOW AT 27150 IN MO

UNDRFLOW AT 27151 IN MO

UNDRFLOW AT 27154 IN MO

UNDRFLOW AT 27156 IN MO
CLUSTER OF 5. CHUTES REQUIRED.

3.7475E 00	1.8440E 02	2.740E-01	-3.9029E 01	1.96498E 04	1.6025E-05
3.7475E 00	1.1333E 02	1.682E-01	-4.6467E 01	1.94596E 04	1.6105E-05
2.2175E 02	6.3248E 01	8.756E-02	-9.3000E 01	4.57416E 03	2.3124E-05
2.9596E 02	6.0096E 01	8.158E-02	-9.3000E 01	0.00000E-39	2.5660E-05

AMC = 3.6497574E 04 OMC = 6.7226851E 01 WMC = 1.3603889E 02 PMC = 1.2505330E 05 WL = 1.2261706E 03 T = 2.9598168E 02
TF = 1.7475145E 00 OMC = 4.8928737E 00 WSTRAPS = 6.8019444F 00

RHOC= 4.0000E-01 GPEAK= 6.0878E 02 Y/R?= 1.0284E-01

GPEAKS	Y/R2 VALUES
-0.0000E-39	0.0000E-39
7.4598E 01	1.0284E-02
1.4601E 02	2.0568E-02
2.1430E 02	3.0852E-02
2.7950E 02	4.1136E-02
3.4168E 02	5.1420E-02
4.0087E 02	6.1704E-02
4.5714E 02	7.1988E-02
5.1051E 02	8.2271E-02
5.6105E 02	9.2555E-02
6.0878E 02	1.0284E-01

SPHERE OPTION

R2 = 2.0177003E 00 T = 2.7666522E-01 S = 2.6617195E 05 MI = 3.3159080E 01
MC = 4.9207532E 00 YDOTG = 6.0877760E 02 RHOC = 4.0000000E-01
TF = 5.1174E-03LESS THAN 1.0000E-02 MINIMUM GAUGE FACE SHEET.

XCGO = 2.4522E 00 DELXF = 1.6633E-01 XTOTCG = 4.9699E 02 YTOTCG = 3.2226E 02

INTERNAL STRUCTURE DESIGN

	AREA(FT2)	T(INS)	W(LBS)
SPHERE	3.8091E 01	1.0000E-02	5.4597E 00

W INTERNAL STRUCTURE = 5.4597E 00

III. COMPUTATIONS

In the following pages are presented block diagrams illustrating the operation of each portion of Program 1882 and the engineering equations which are solved.

The block diagrams and engineering write-ups are broken down into the four portions of the program, namely; heat shield and structural shell, descent system, impact attenuation system, and the lander packaging design. Symbols used precede the equations.

A. BLOCK DIAGRAM

A block diagram of Program 1882 is shown below as Figure 7.

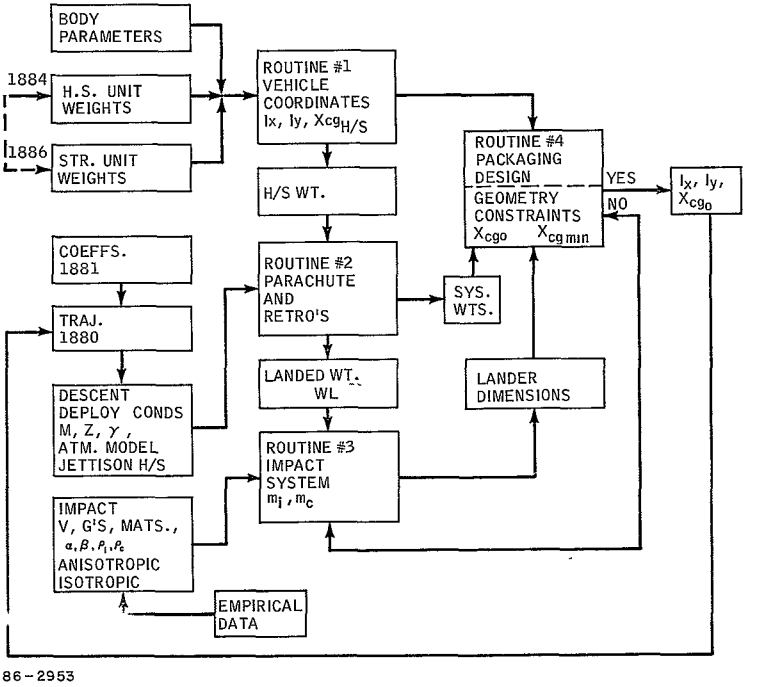

86-2953

Figure 7 BLOCK DIAGRAM OF PROGRAM 1882

B. SYMBOLS

a_o, a_1, a_2, a_3	Coefficients of the $S(\theta)$ equation in the anisotropic crush-up analysis
A	Area, ft^2
a	Speed of sound, ft/sec
C_D	Drag coefficient
C_p	Specific heat at constant pressure, Btu/lb
d	Diameter, feet
D	Drag force, pounds
E	Modulus of elasticity, psi
g	Acceleration due to gravity, ft/sec^2
I_{sp}	Required specific impulse of retrorocket system, lb-sec/lb
I_x	Roll moment of inertia, $slug-ft^2$
I_y	Pitch moment of inertia, $slug-ft^2$
L_1	Temperature gradient in the troposphere expressed as a function of the adiabatic lapse rate
L_c	Length of cylindrical vehicle section, feet
L_{co}	Length of internal cone, feet
L_{cyl}	Length of internal cylinder, feet
L_o	Temperature gradient in the troposphere, $^oK/ft$
L_R	Length of a retrorocket, feet
m	Mass, slugs
M	Mach number
M	Molecular weight
MR	Mass-fuel ratio of retrorocket

N	Exponent of the $S(\theta)$ equation in the anisotropic crushup analysis
n	Number of chutes in a cluster
P	Opening parachute shock load, pounds
q	Dynamic pressure, lb/ft^2
r	Vehicle ordinate dimension, feet
R	Universal gas constant, $89,516\ ft^2/sec^2$ - mole - ^oK
R_1	Inner radius of lander payload package, feet
R_2	Outer radius of lander payload package, feet
R_A	Aft spherical body radius, feet
R_B	Flare body radius, feet
R_C	Vehicle cylinder body radius, feet
R_{CO}	Radius of internal cone and/or cylinder, feet
R_N	Spherical nose cap radius, feet
R_{SB}	Toroidal radius adjacent to the flare cone section, feet
R_{SC}	Toroidal radius adjacent to the cone section, feet
R_{SN}	Toroidal radius adjacent to the spherical nose cap section, feet
R_T	Aft cone base radius, feet
S	Crushing stress of impact material, lb/ft^2
t_{fs}	Internal structure face sheet thickness, inches
t_c	Thickness of the crushable material, feet
t_{cc}	Thickness of the parachute packaging ring, feet
T	Temperature, ^oK

V_{imp}	Design impact velocity for the retrorocket system (vertical and horizontal component included), ft/sec
V_o	Total resultant impact velocity, ft/sec
V_v	Design vertical descent velocity for chute systems, ft/sec
V_w	Horizontal velocity component, ft/sec
w	Unit weight, lb/ft^2
W	Weight, pounds
W_e	Total vehicle entry weight, pounds
W_{RR}	Entry weight less the total heat shield and structure weight, pounds
x	Vehicle abcissa dimension, feet
$\bar{X}$	Centroidal distance as measured from the vehicle nose, feet
X_A	Mole fraction of argon in the atmosphere
X_C	Mole fraction of CO_2 in the atmosphere
X_D	Dynamic opening shock load factor on the drogue chute
X_{MC}	Dynamic opening shock load factor on the main chute
X_N	Mole fraction of N_2 in the atmosphere
X_O	Mole fraction of O_2 in the atmosphere
ΔX	Distance between vehicle nose and lander nose, feet
y	Crushup stroke coordinate, feet
Z	Altitude, feet
α	Curve fit constant relating crushing stress and density
β	Initial body angle in the tension shell section, degrees
γ	Flight path angle (positive in climb), degrees

ϵ	Total usable strain
θ_{2G}	Initial body angle of the general shape section, degrees
θ_{3G}	Final body angle of the general shape section, degrees
θ_A	Aft cone section body angle, degrees
θ_B	Flare section body angle, degrees
θ_C	Cone section body angle, degrees
θ_{CO}	Internal lander cone angle, degrees
θ_M	Angle subtended by the crushable material segment, degrees
θ_N	Complement of nose cap angle, degrees
ρ	Density, slug/ft^3
σ	Yield strength of face sheet, psi
ψ	Curve fit constant relating crushing stress and density

Subscripts:

1,2,3, etc.	Designated points on the vehicle surface
c	Crushup
cl	Parachute cluster
c.g.	Center of gravity
D	Drogue parachute conditions
f	Final utilized value
fs	Face sheet (internal structure)
HS	Heat shield
H/S	Heat shield and structure

i	Internal lander (payload and crushup)
ii	Initial weight just prior to retrorocket ignition
imp	Impact conditions
m	Maximum
MC	Main chute conditions
R	Retrorocket conditions
SL	Sea level conditions
ST	Stratosphere conditions
STR	External structure
susp	Suspended weight on chute system
v	Vehicle profile
vert	Vertical component
w	Wind component
e	Earth conditions

C. ENGINEERING EQUATIONS

1. Heat Shield and Structural Shell System

There are 13 possible body sections which exist for the overall general shape. The x and r coordinates can be evolved for any shape via equations which are provided. These coordinates are evolved from input body parameters.
For the tension shell option, the x and r coordinate equations are provided, and for the general shape option the x and r coordinates are specified as inputs.

With the body coordinates in hand for the desired vehicle shape, the area, centroid, moments of inertia, and weight of each section are then calculated.

The final calculation in this portion of the program is to establish the center of gravity of the heat shield and structural shell.

RE-ORDER No. 66-417

2. Shape Generation Equations

a. SECTIØN 1. Spherical Nose Cap

Coordinates	Formula	Independent Variable Limits
x_o	$x_o = 0$	$\theta_o = 90°$
$x_o \rightarrow x_1$	$x = R_N (1 - \sin\theta)$	$\theta_1 = \theta_N$
x_1	$x_1 = R_N (1 - \sin\theta_N)$	$\theta_o \leq \theta \leq \theta_1$
r_o	$r_o = 0$	
$r_o \rightarrow r_1$	$r = R_N \cos\theta$	
r_1	$r_1 = R_N \cos\theta_N$	

b. SECTIØN 2. Torus

$x_1 \rightarrow x_2$	$x = x_1 + R_{SN} (\sin\theta_N - \sin\theta)$
x_2	$x_2 = x_1 + R_{SN} (\sin\theta_N - \sin\theta_2)$
$r_1 \rightarrow r_2$	$r = r_1 + R_{SN} (\cos\theta - \cos\theta_N)$
r_2	$r_2 = r_1 + R_{SN} (\cos\theta_2 - \cos\theta_N)$

θ_2 depends on which option is utilized:

SECTIØN 3.	$\theta_2 = \theta_c$
SECTIØN 4.	$\theta_2 = \beta$
SECTIØN 5.	$\theta_2 = \theta_{2G}$

c. SECTIØN 3.

$x_2 \rightarrow x_3$	$x = x_2 + (r - r_2) \cot\theta_c$	$r_2 \leq r \leq r_3$
x_3	$x_3 = x_2 + (r_3 - r_2) \cot\theta_c$	
$r_2 \rightarrow r_3$	$r = r$	
r_3	$r_3 = R_C - R_{SC} (1 - \cos\theta_c)$	

d. SECTIØN 4.

209

$$r = \left[r_3^2 + (r_2^2 - r_3^2) \frac{\ln \left(\frac{1+\cos\theta}{\sin\theta} \right)}{\ln \frac{1+\cos\beta}{\sin\beta}} \right]^{1/2} \qquad \beta \leq \theta \leq 90^\circ \tag{1}$$

$$x = x_2 + \int_{r_2}^{r} \cot\theta \, dr \tag{2}$$

$$r_3 = R_C - R_{SC} \tag{3}$$

e. SECTIØN 5.

Table of x and r coordinates (maximum of 25 points)

First pair of coordinates are x_2, r_2

Last pair of coordinates are x_3, r_3

Also specify θ_{2G} and θ_{3G}

$$x_2 = x_1 + R_{SN} (\sin\theta_N - \sin\theta_{2G}) \tag{4}$$

$$r_2 = r_1 + R_{SN} (\cos\theta_{2G} - \cos\theta_N) \tag{5}$$

$$x_3 = x_2 + (r_3 - r_2) \cos\theta_{2G} \tag{6}$$

$$r_3 = R_C - R_{SC} (1 - \cos\theta_{2G}) \tag{7}$$

f. SECTIØN 6.

$x_3 \rightarrow x_4$ $\quad x = x_3 + R_{SC} (\sin\theta_3 - \sin\theta)$ (8)

x_4 $\quad x_4 = x_3 + R_{SC} \sin\theta_3 \qquad \theta_3 \leq \theta \leq 0^\circ$ (9)

$r_3 \rightarrow r_4$ $\quad r = r_3 + R_{SC} (\cos\theta - \cos\theta_3)$ (10)

r_4 $\quad r_4 = R_C$ (11)

θ_3 depends on which option section (2-3) utilizes, i.e:

SECTIØN 3. $\quad \theta_3 = \theta_c$

SECTIØN 4. $\quad \theta_3 = 90^\circ$

SECTIØN 5. $\quad \theta_3 = \theta_{3G}$

g. SECTIØN 7.

$x_4 \rightarrow x_5$	$x = x$	$x_4 \leq x \leq (x_4 + L_c)$	(12)
x_5	$x_5 = x_4 + L_c$		(13)
$r_4 \rightarrow r_5$	$r = R_C$		(14)
r_5	$r_5 = R_C$		(15)

h. SECTIØN 8.

$x_5 \rightarrow x_6$	$x = x_5 + (r - R_C)\cot\theta_B$	$r_5 \leq r \leq r_6$	(16)
x_6	$x_6 = x_5 + (r_6 - R_C)\cot\theta_B$		(17)
$r_5 \rightarrow r_6$	$r = r$		(18)
r_6	$r_6 = R_B - R_{SB}(1 - \cos\theta_B)$		(19)

i. SECTIØN 9.

$x_6 \rightarrow x_7$	$x = x_6 + R_{SB}(\sin\theta_B - \sin\theta)$	$\theta_B \leq \theta \leq 0°$	(20)
x_7	$x_7 = x_6 + R_{SB}\sin\theta_B$		(21)
$r_6 \rightarrow r_7$	$r = r_6 + R_{SB}(\cos\theta - \cos\theta_B)$		(22)
r_7	$r_7 = R_B$		(23)

J. SECTIØN 10.

$x_7 \rightarrow x_8$	$x = x_7 - R_{SB}\sin\theta$	$0° \leq \theta \leq \theta_A$	(24)
x_9	$x_8 = x_7 - R_{SB}\sin\theta_A$		(25)
$r_7 \rightarrow r_8$	$r = R_B - R_{SB}(1 - \cos\theta)$		(26)
r_8	$r_8 = R_B - R_{SB}(1 - \cos\theta_A)$		(27)

k. SECTIØN 11.

$x_8 \rightarrow x_9$	$x = x_8 + (r - r_8)\cot\theta_A$	$r_9 \leq r \leq r_8$	(28)
x_9	$x_9 = x_8 + (r_9 - r_8)\cot\theta_A$		(29)

$r_8 \rightarrow r_9$	$r = r$	(30)
r_9	$r_9 = R_A \cot \theta_A$	(31)

1. SECTIØN 12.

$x_9 \rightarrow x_{10}$	$x = x_9 + R_A (\sin \theta_A - \sin \theta)$	$\theta_A \leq \theta \leq -90°$	(32)
x_{10}	$x_{10} = x_9 + R_A (\sin \theta_A + 1)$		(33)
$r_9 \rightarrow r_{10}$	$r = R_A \cos \theta$		(34)
r_{10}	$r_{10} = 0$		(35)

m. SECTIØN 13.

$x_9 \rightarrow x_{10}$	$x = x_9$	$0 \leq r \leq R_T$	(36)
x_{10}	$x_{10} = x_9$		(37)
$r_9 \rightarrow r_{10}$	$r = R_T - r$		(38)
r_{10}	$r_{10} = 0$		(39)

3. Shape and Body Parameter Logic

a. The nose cap, SECTIØN 1. cannot be omitted.

b. If the R_{SN} torus, SECTIØN 2. is omitted, then:

$\theta_2 = \theta_N$

$x_2 = x_1$

$r_2 = r_1$

c. When SECTIØNS 3., 4., 5., and SECTIØN 6. are omitted,

$x_2 = x_4$

$r_2 = r_4$

d. If the cylinder, SECTIØN 7. is omitted, then:

$$x_5 = x_4$$

$$r_5 = r_4$$

e. SECTIØN 8. and SECTIØN 9. can be omitted together only in which event:

$$x_7 = x_6 = x_5$$

$$r_7 = r_6 = r_5 \quad .$$

f. If SECTIØN 10. is omitted:

$$x_8 = x_7$$

$$r_8 = r_7 \quad .$$

g. If SECTIØN 11. is omitted, then:

$$x_8 = x_9$$

$$r_8 = r_9 \quad .$$

h. Either the aft sphere, SECTIØN 12. or the base, SECTIØN 13. has to be specified. Both can not be simultaneously present or deleted.

Listed below are the equations for the surface area, centroid, and moments of inertia of each section. The centroid and moments of inertia are measured about the nose of the vehicle.

a. SECTIØN 1.

1) Area

$$A = 2\pi R_N^2 (1 - \sin\theta_N) \quad , \tag{40}$$

2) Centroid

$$\bar{X} = \frac{\pi R_N^3}{A} [2 (1 - \sin\theta_N) - \cos^2 \theta_N] \tag{41}$$

3) Roll moment of inertia

$$I_x = \frac{2\pi w_{01} R_N^4}{3 g_e} [2 - \sin \theta_N(\cos^2 \theta_N + 2)] \tag{42}$$

4) Pitch moment of inertia

$$I_y = \frac{2\pi\, w_{01}\, R_N^4}{3 g_\oplus} \left[1 - 3 \sin\theta_N + 3 \sin^2\theta_N - \sin^3\theta_N\right] + \frac{I_x}{2} \tag{43}$$

where w_{01} is the sum of the unit heat shield and structure (the structure includes the weight factor STRFAC)

b. SECTIÓN 2.

1) Area

$$A = 2\pi R_{SN} \left[\frac{R_{SN} \cos\theta_N}{57.3} (\theta_N - \theta_2) + R_{SN} (\sin\theta_N - \sin\theta_2) + \frac{R_{SN} \cos\theta_N (\theta_2 - \theta_N)}{57\,3}\right] \tag{44}$$

2) Centroid

$$\bar{X} = \frac{2\pi R_{SN}}{A} \left[\frac{A_{12} B_{12}}{57.3} (\theta_N - \theta_2) + B_{12} R_{SN} (\sin\theta_N - \sin\theta_2) + A_{12} R_{SN} (\cos\theta_N - \cos\theta_2) - \frac{R_{SN}^2}{2} (\sin^2\theta_N - \sin^2\theta_2)\right] \tag{45}$$

3) Roll moment of inertia

$$I_x = \frac{2\pi\, w_{12}\, R_{SN}}{g_\oplus} \left[\frac{A_{12}^3 (\theta_N - \theta_2)}{57.3} + 3 A_{12}^2 R_{SN} (\sin\theta_N - \sin\theta_2) + \frac{3}{2} A_{12} R_{SN}^2 \left(\frac{\theta_N - \theta_2}{57.3} + \frac{\sin 2\theta_N - \sin 2\theta_2}{2}\right) + \frac{R_{SN}^3}{3} \left\{\sin\theta_N (\cos^2\theta_N + 2) - \sin\theta_2 (\cos^2\theta_2 + 2)\right\}\right] \tag{46}$$

4) Pitch moment of inertia

$$I_y = \frac{2\pi w_{12}}{g_\Theta} R_{SN} \left[\frac{A_{12} B_{12}^2 (\theta_N - \theta_2)}{57.3} + 2A_{12} B_{12} R_{SN} (\cos\theta_N - \cos\theta_2) \right.$$

$$+ \frac{A_{12} R_{SN}^2}{2} \left(\frac{\theta_N - \theta_2}{57.3} - \frac{\sin 2\theta_N - \sin 2\theta_2}{2} \right) + B_{12}^2 R_{SN} (\sin\theta_N - \sin\theta_2)$$

$$\left. - B_{12} R_{SN}^2 (\sin^2\theta_N - \sin^2\theta_2) + \frac{R_{SN}^2}{3} (\sin^3\theta_N - \sin^3\theta_2) \right] + \frac{I_x}{2}$$

where,

$$A_{12} = r_1 - R_{SN} \cos\theta_N$$

$$B_{12} = x_1 + R_{SN} \sin\theta_N$$

and θ_2 depends on which option is utilized:

SECTIØN 3. $\theta_2 = \theta_c$

SECTIØN 4. $\theta_2 = \beta$

SECTIØN 5. $\theta_2 = \theta_{2G}$

c. SECTIØN 3.

1) Area

$$A = \frac{\pi}{\sin\theta_c} (r_3^2 - r_2^2) \qquad (48)$$

2) Centroid

$$\bar{X} = \frac{\pi}{A \sin\theta_c} \left[[A_{23} (r_3^2 - r_2^2)] + \frac{2 \cot\theta_c}{3} (r_3^3 - r_2^3) \right] \qquad (49)$$

3) Roll moment of inertia

$$I_x = \frac{\pi w_{23}}{2 g_\Theta \sin\theta_c} (r_3^4 - r_2^4) \qquad (50)$$

4) Pitch moment of inertia

$$I_y = \frac{\pi w_{23}}{g_\oplus \sin\theta_c}\left[A_{23}^2(r_3^2 - r_2^2) + \frac{4A_{23}}{3}\cot\theta_c(r_3^3 - r_2^2) + \frac{\cot^2\theta_c}{2}(r_3^4 - r_2^4)\right] + \frac{I_x}{2} \quad (51)$$

where,

$$A_{23} = x_2 - r_2\cot\theta_c$$

d. SECTIØN 4. and 5.

1) Area

$$A = 2\pi\int\frac{r\,dx}{\cos\theta} \quad (52)$$

2) Centroid

$$\bar{X} = \frac{2\pi}{A}\int\frac{r\,x\,dx}{\cos\theta} \quad (53)$$

3) Roll moment of inertia

$$I_x = \frac{2\pi w_{23}}{g_\oplus}\int\frac{r^3\,dx}{\cos\theta} \quad (54)$$

4) Pitch moment of inertia

$$I_y = \frac{2\pi w_{23}}{g_\oplus}\int\frac{r\,x^2\,dx}{\cos\theta} + \frac{I_x}{2} \quad (55)$$

SECTIØN 5. $\theta_{2G} \le \theta \le \theta_{3G}$

SECTIØN 4. $\beta \le \theta \le 90°$

e. SECTION 6.

1) Area

$$A = 2\pi R_{SC}\left[\frac{r_3\,\theta_3}{57.3} + R_{SC}\left(\sin\theta_3 - \frac{\theta_3\cos\theta_3}{57.3}\right)\right] \tag{56}$$

2) Centroid

$$\bar{X} = \frac{2\pi R_{SC}}{A}\left[\frac{A_{34}\,B_{34}\,\theta_3}{57.3} + B_{34}\,R_{SC}\sin\theta_3 + A_{34}\,R_{SC}\,(\cos\theta_3 - 1) - \frac{R_{SC}^2}{2}(\sin^2\theta_3)\right] \tag{57}$$

3) Roll moment of inertia

$$I_x = \frac{2\pi\, w_{34}\, R_{SC}}{g_\oplus}\left[\frac{A_{34}^3\,\theta_3}{57.3} + 3\,A_{34}^2\,R_{SC}\sin\theta_3 + \frac{3}{2}\,A_{34}\,R_{SC}^2\left(\frac{\theta_3}{57.3} + \frac{\sin 2\theta_3}{2}\right) + \frac{R_{SC}^3}{3}\sin\theta_3\,(\cos^2\theta_3 + 2)\right]$$

4) Pitch moment of inertia

$$I_y = \frac{2\pi\, w_{34}\, R_{SC}}{g_\oplus}\left[\frac{A_{34}\,B_{34}^2\,\theta_3}{57.3} + 2A_{34}\,B_{34}\,R_{SC}\,(\cos\theta_3 - 1) + \frac{A_{34}\,R_{SC}^2}{2}\left(\frac{\theta_3}{57.3} - \frac{\sin 2\theta_3}{2}\right) + B_{34}^2\,R_{SC}\sin\theta_3 - B_{34}\,R_{SC}^2\sin^2\theta_3 + \frac{R_{SC}^3}{3}\sin^3\theta_3\right] + \frac{I_x}{2} \tag{59}$$

where,

$$A_{34} = r_3 - R_{SC}\cos\theta_3$$

$$B_{34} = x_3 + R_{SC}\sin\theta_3$$

and θ_3 depends on which option section 2-3 utilizes:

SECTIØN 3. $\theta_3 = \theta_C$

SECTIØN 4. $\theta_3 = 90°$

SECTIØN 5. $\theta_3 = \theta_{3G}$

f. SECTIØN 7.

1) Area

$$A = 2\pi R_C L_c \tag{60}$$

2) Centroid

$$\bar{X} = x_4 + \frac{L_c}{2} \tag{61}$$

3) Roll moment of inertia

$$I_x = \frac{2\pi w_{45} R_C^3}{g_\oplus} \quad (x_5 \rightarrow x_4) \tag{62}$$

4) Pitch moment of inertia

$$I_y = \frac{2\pi w_{45} R_C}{g_\oplus} (x_5^3 - x_4^3) + \frac{I_x}{2} \tag{63}$$

g. SECTIØN 8.

1) Area

$$A = \frac{\pi}{\sin \theta_B} (r_6^2 - r_5^2) \tag{64}$$

2) Centroid

$$\bar{X} = \frac{\pi}{A \sin \theta_B} \left[A_{56} (r_6^2 - r_5^2) + \frac{2 \cot \theta_B}{3} (r_6^3 - r_5^3) \right] \tag{65}$$

3) Roll moment of inertia

$$I_x = \frac{\pi w_{56}}{2 g_\oplus \sin \theta_B} (r_6^4 - r_5^4) \tag{66}$$

4) Pitch moment of inertia

$$I_y = \frac{\pi w_{56}}{g_\oplus \sin\theta_B}\left[A_{56}^2\,(r_6^2 - r_5^2) + \frac{4A_{56}}{3}\cot\theta_B\,(r_6^3 - r_5^3) + \frac{1}{2}\cot^2\theta_B\,(r_6^4 - r_5^4)\right] + \frac{I_x}{2} \quad (67)$$

where,

$$A_{56} = x_5 - R_C \cot\theta_B$$

h. SECTIØN 9.

The area, centroid and inertia equations for this section are identical to SECTIØN 6. with the following changes:

x_3 is replaced by x_6

R_{SC} is replaced by R_{SB}

θ_3 is replaced by θ_B (for all options)

r_3 is replaced by r_6

i. SECTIØN 10.

1) Area

$$A = 2\pi R_{SB}\left[R_{SB}\left(\frac{\theta_A}{57.3} - \sin\theta_A\right) - \frac{R_B\,\theta_A}{57.3}\right] \quad (68)$$

2) Centroid

$$\bar{X} = \frac{2\pi R_{SB}}{A}\left[\frac{R_{SB}}{2}\sin^2\theta_A - \frac{A_{78}B_{78}\,\theta_A}{57.3} - B_{78}R_{SB}\sin\theta_A - A_{78}R_{SB}\,(\cos\theta_A - 1)\right] \quad (69)$$

3) Roll moment of inertia

$$I_x = -\frac{2\pi w_{78} R_{SB}}{g_\oplus}\left[\frac{A_{78}^3\,\theta_A}{(57.3)} + 3A_{78}^2 R_{SB}\sin\theta_A + \frac{3}{2}A_{78}R_{SB}^2\left(\frac{\theta_A}{57.3} + \frac{\sin 2\theta_A}{2}\right) + \frac{R_{SB}^3}{3}\sin\theta_A\,(\cos^2\theta_A + 2)\right] \quad (70)$$

4) Pitch moment of inertia

$$I_y = -\frac{2\pi w_{78} R_{SB}}{g_\oplus}\left[\frac{A_{78} B_{78}^2 \theta_A}{57.3} + 2 A_{78} B_{78} R_{SB} (\cos\theta_A - 1)\right.$$

$$+ \frac{A_{78} R_{SB}^2}{2}\left(\frac{\theta_A}{57.3} - \frac{\sin 2\theta_A}{2}\right) + B_{78}^2 R_{SB} \sin\theta_A$$

$$\left. - B_{78} R_{SB}^2 (\sin^2\theta_A) + \frac{R_{SB}^3}{3} \sin^3\theta_A\right] + \frac{I_x}{2} \qquad (71)$$

where,

$$A_{78} = R_B - R_{SB}$$

$$B_{78} = x_7$$

j. SECTIØN 11.

1) Area

$$A = \frac{\pi}{\sin\theta_A}(r_9^2 - r_8^2) \qquad (72)$$

2) Centroid

$$\bar{X} = \frac{\pi}{A \sin\theta_A}\left[A_{89}(r_9^2 - r_8^2) + \frac{2\cot\theta_A}{3}(r_9^3 - r_8^3)\right] \qquad (73)$$

3) Roll moment of inertia

$$I_x = \frac{\pi w_{89}}{2 g_\oplus \sin\theta_A}(r_9^4 - r_8^4) \qquad (74)$$

4) Pitch Moment of inertia

$$I_y = \frac{\pi w_{89}}{g_\oplus \sin\theta_A}\left[A_{89}^2 (r_9^2 - r_8^2) + \frac{4 A_{89}}{3}\cot\theta_A (r_9^3 - r_8^3)\right.$$

$$\left. + \frac{\cot^2\theta_A}{2}(r_9^4 - r_8^4)\right] + \frac{I_x}{2} \qquad (75)$$

where,

$$A_{89} = x_8 - r_8 \cot \theta_A$$

k. SECTION 12.

1) Area

$$A = 2\pi R_A^2 (\sin \theta_A + 1) \tag{76}$$

2) Centroid

$$\bar{X} = \frac{2\pi R_A}{A} \left[A_{910} R_A (\sin \theta_A + 1) + \frac{R_A^2}{2} (1 - \sin^2 \theta_A) \right] \tag{77}$$

3) Roll moment of inertia

$$I_x = \frac{2\pi w_{910} R_A^4}{3g_\oplus} [\sin \theta_A (\cos^2 \theta_A + 2) + 2] \tag{78}$$

4) Pitch moment of inertia

$$I_y = \frac{2\pi w_{910} R_A^2}{g_\oplus} \left[A_{910}^2 (\sin \theta_A + 1) + A_{910} R_A (1 - \sin^2 \theta_A) + \frac{R_A^2}{3} (\sin^3 \theta_A + 1) \right] + \frac{I_x}{2} \tag{79}$$

where,

$$A_{910} = x_9 + R_A \sin \theta_A$$

l. SECTION 13.

1) Area

$$A = \pi R_T^2 \tag{80}$$

2) Centroid

$$\bar{X} = x_{10} \tag{81}$$

3) Roll moment of inertia

$$I_x = \frac{\pi\, w_{910}\, R_T^4}{2 g_\oplus} \tag{82}$$

4) Pitch moment of inertia

$$I_y = \frac{\pi\, w_{910}\, X_{10}^2\, R_T^2}{g_\oplus} + \frac{I_x}{2} \tag{83}$$

The weight of each section of the vehicle is calculated in the following manner:

Example:

SECTION 1.

$W_{HS} = w_{01_{HS}} A$ pound

$W_{STR} = (w_{01_{STR}} A)\ (STRFAC)$ pound

$W_{RR} = W_e - \sum (W_{HS} + W_{STR})$ pound

The center of gravity of the heat shield and structural shell is calculated, with respect to the nose of the vehicle, by the following expression:

$$X_{CG_{H/S}} = \frac{W_{01}\ \bar{X}_{01} + W_{12}\ \bar{X}_{12} + \cdots\cdots\cdots W_{910}\ \bar{X}_{910}}{W_{01} + W_{12} + \cdots\cdots W_{910}} \tag{84}$$

4. Descent System

The descent system portion of this program consists of three options, as shown in Figure 3; namely:

a. Option One -- Two Chute System

1) Drogue chute

Chute diameter $\geq$ specified minimum diameter

2) Main chute

a) Single chute diameter $\geq$ specified minimum diameter

b) Cluster of n chutes if the diameter of a single chute $\geq$ maximum input diameter.

b. Option Two -- Single Chute System

1) Main chute

a) Single chute diameter $\geq$ specified minimum diameter

b) Cluster of n chutes if the diameter of a single chute $\geq$ maximum input diameter.

c. Option Three -- Drogue Chute - Retrorocket System

1) Drogue chute

Specified chute diameter

2) Retrorocket

Sized on required ΔV

5. Atmosphere Equations

To solve the equations of motion utilized in each of the descent system options, a model atmosphere relating the atmospheric density and speed of sound as a function of altitude must be generated. The model atmosphere will consist of a troposphere and stratosphere. Equations are not generated for the thermosphere since it is assumed that chute deployment conditions will always be well below the thermosphere region. The inputs required to establish the atmosphere are sea-level temperature, stratosphere temperature, the temperature gradient in the troposphere expressed as a fraction of adiabatic lapse rate, the acceleration of gravity at sea level, the mole fraction of the concentrations of oxygen, nitrogen, carbon dioxide, and argon in the atmosphere, and the sea-level density. Nine quantities are used to specify the atmosphere. The atmosphere is assumed to be in hydrostatic equilibrium.

a. Troposphere

$$M = 28\,X_N + 32\,X_O + 44\,X_C + 40\,X_A \tag{85}$$

$$R = 89{,}516$$

$$C_p = \frac{R}{M}\,(3.5\,X_N + 3.5\,X_O + 4.0\,X_C + 2.5\,X_A) \tag{86}$$

$$L_o = -L_1 \left(\frac{g_{SL}}{C_p}\right) \tag{87}$$

$$Z_{ST} = \frac{T_{ST} - T_{SL}}{L_o} \tag{88}$$

$$\rho = \rho_{SL} \left(1 + \frac{L_o Z}{T_{SL}}\right)^{-\left(1 + \frac{Mg_{SL}}{RL_o}\right)} \tag{89}$$

$$T = T_{SL} + L_o Z \tag{90}$$

$$a = \sqrt{\frac{C_p T}{\frac{C_p M}{R} - 1}} \tag{91}$$

b. Stratosphere $Z > Z_{ST}$

$$a = \sqrt{\frac{C_p T_{ST}}{\frac{C_p M}{R} - 1}} \tag{92}$$

$$\rho_{ST} = \rho_{SL} \left(\frac{T_{ST}}{T_{SL}}\right)^{-\left(1 + \frac{Mg_{SL}}{RL_o}\right)} \tag{93}$$

$$\rho = \rho_{ST} e^{-\frac{Mg_{SL}}{RT_{ST}} (Z - Z_{ST})} \tag{94}$$

6. Equations of Motion

For purposes of short-range parachute trajectories, the two-degree-of-freedom equations of motion are utilized neglecting the centripetal acceleration and lift component of the vehicle. The equations are as follows:

$$m\dot{V} = -D - mg_{SL} \sin\gamma \tag{95}$$

$$V\dot{\gamma} = -g_{SL} \cos\gamma \tag{96}$$

$$\dot{Z} = +V \sin\gamma \tag{97}$$

a. Two Chute System - Option 1

1) Drogue chute

It is desired to deploy a drogue chute at some specified Mach number (M_D) and altitude (Z_D) so as to have the vehicle decelerate to a specified set of main chute deployment conditions of Mach number (M_{MC}) and altitude (Z_{MC}). The intent is to determine the drogue chute canopy area which will satisfy these end conditions (see Figure 3b).

To start the drogue chute trajectory, a minimum specified diameter chute is used in the drag component:

$$D = \frac{1}{2} (C_D A)_{eff} \rho(Z) V^2(Z) \tag{98}$$

where,

$$(C_D A)_{eff} = (C_D A)_V + (C_D A)_D \tag{99}$$

$$m = \frac{W_e}{g_\oplus} \tag{100}$$

and,

$$A_V = \pi R_C^2 \tag{101}$$

If the minimum specified drogue chute diameter satisfies the main chute deployment conditions such that the main chute deployment Mach number (M_{MC}) is reached at a higher altitude than the specified deployment altitude (Z_{MC}), then the drogue is allowed to decelerate to the specified deployment altitude (Z_{MC}) and some new somewhat lower Mach number. In this case the design drogue chute diameter is the minimum specified value and the main-chute descent commences at the specified deployment altitude (Z_{MC}) with the newly established Mach number.

If the minimum specified drogue chute diameter does not satisfy the deployment conditions of the main chute, then increasing drogue chute areas (A_D) are used until the end conditions are satisfied within ± 500 feet of the specified main chute deployment altitude (Z_{MC}).

a) Drogue Diameter

$$d_D = \sqrt{\frac{4A_D}{\pi}} \tag{102}$$

b) Drogue Weight

$$W_D = 0.11 \left[\frac{d_D}{18.6} \frac{q_D}{65}\right] A_D \qquad \left[\text{Curve fit from Reference 3}\right]$$

c) Opening Drogue Shock Load

$$P_D = X_D \, q_D \, (C_D A)_D \qquad \left[\text{Reference 2}\right] \tag{103}$$

where,

$$q_D = 1/2 \, \rho_D \, V_D^2 \tag{104}$$

2) Main chute

The main chute canopy area is sized such that the suspended package decelerates to a specified vertical descent velocity (see Figure 3b). Terminal descent velocity is assumed such that

$$A_{MC} = \frac{2 g_{SL} \, m_{susp}}{\rho_{SL} \, C_{D_{MC}} \, V_{vert}^2} \tag{105}$$

The calculated main chute canopy diameter must be ≥ a minimum specified diameter. If the calculated diameter is less than the minimum specified value, then the specified diameter is utilized. In the above equation m_{susp} is dependent upon when the heat shield and structure is jettisoned from the vehicle. There are two options; namely,

a) Jettison at main chute deployment

$$m_{susp} = \frac{W_{RR} - W_D}{g_\oplus} \tag{106}$$

b) Jettison just prior to impact

$$m_{susp} = \frac{W_e - W_D}{g_e} \tag{107}$$

Main Chute Diameter

$$d_{MC} = \sqrt{\frac{4A_{MC}}{\pi}} \tag{108}$$

b. Main Chute Cluster Option

If the diameter of the main chute exceeds the maximum specified diameter, then a cluster of n chutes are employed so as to reduce the size of each chute to less than the maximum allowable value. The area of each chute in the cluster is defined as:

$$A_{MC} = \frac{2\, g_{SL}\, m_{susp}}{n \rho_{SL}\, C_{D_{cl}}\, V_{vert}^2} \tag{109}$$

where n is the number of chutes in the cluster and $C_{D_{cl}}$ the drag coefficient of each chute in the cluster.

$$C_{D_{cl}} = C_{D_{MC}} (0.95 - 0.03\, n) \qquad \text{[Reference 2]} \tag{110}$$

The diameter of each chute in the cluster is

$$d_{cl} = \sqrt{\frac{4A_{MC}}{\pi}} , \tag{111}$$

hence n should be increased until this diameter $\leq$ the maximum specified diameter.

The number of chutes n is increased in odd increments, i.e., n equal to 3, 5, 7, ...15.

The weight of the clustered main chute system is:

$$W_{MC_{cl}} = \frac{0.013\, q_{MC}\, A_{MC}}{10} (0.98 + 0.045\, n)\, n \tag{112}$$

c. Main Chute Descent Trajectory

With the area of the main chute canopy established via either a single chute or cluster, the actual main chute descent trajectory can be determined from the equations of motion. In general, because of the large size of the main chute, the filling time and/or loss in altitude has to be accounted for before the trajectory commences.

The main chute filling time is expressed as:

$$t_f = d_{MC} \left(0.05 - 3.0 \times 10^{-5} V_{MC}\right) \qquad \left[\text{Reference 2}\right] \quad (113)$$

Assuming no change in velocity during inflation, the loss in altitude is:

$$\Delta Z_f = V_{MC}\, t_f \ ;$$

hence the main chute trajectory commences at γ_{MC}, V_{MC}, and $(Z_{MC} - \Delta Z_f)$. The mass(m) used in the equations of motion is m_{susp} and is dependent upon when the heat shield and structure are jettisoned.

1) Jettison at Main Chute Deployment

$$m_{susp} = \frac{W_{RR} - W_D}{g_\oplus} \quad (114)$$

$$(C_D A)_{eff} = (C_D A)_{MC} \quad (115)$$

2) Jettison Just Prior to Impact

$$m_{susp} = \frac{W_e - W_D}{g_\oplus} \quad (116)$$

$$(C_D A)_{eff} = (C_D A)_v + (C_D A)_{MC} \ . \quad (117)$$

Note that if the cluster option is utilized, then $C_{D_{MC}}$ is replaced by ${}_{(n)}C_{D_{cl}}$.

3) Single Main Chute Weight

$$W_{MC} = \frac{0.013\, q_{MC}\, A_{MC}}{10} \quad (118)$$

4) Opening Main Chute Shock Load (Single or Cluster)

$$P_{MC} = X_{MC}\, q_{MC}\, (C_D A)_{MC} \quad (119)$$

where,

$$q_{MC} = \frac{1}{2} \rho_{MC} V_{MC}^2 \quad (120)$$

5) Landed Impact Weight (Crushup, Payload and Internal Structure)

$$W_L = W_{RR} - W_D - W_{MC} - W_{STRAPS} \quad (121)$$

where,

$$W_{STRAPS} = 0.05 (W_D + W_{MC}) \ .$$

d. Single Chute System-Option 2

It is desired to deploy a main chute at a specified Mach number (M_{MC}) and altitude (Z_{MC}) so as to decelerate the package to a specified impact velocity at zero altitude. This option is identical to the main chute portion of Option 1, including clusters.

e. Drogue Retrorocket System-Option 3

Option 3 consists of a specified drogue chute diameter and a retrorocket. The intent is to deploy the drogue chute at specified deployment Mach number (M_D) and altitude (Z_D) conditions. The drogue is allowed to decelerate down to impact and the drogue chute impact velocity (V_D) is obtained via the equations of motion and/or descent trajectory. The retrorocket is then sized on the ΔV which exists between the resultant of the drogue impact velocity (V_D) and horizontal wind velocity (V_W), and the required specified impact velocity (V_{imp}).

1) Resultant Velocity at Retro Ignition

$$V_R = \sqrt{V_D^2 + V_W^2} \quad (122)$$

2) Required Rocket ΔV

$$\Delta V = V_R - V_{imp} \quad (123)$$

3) Retrorocket Weight (Structure and Fuel)

$$W_R = \frac{W_{ii} - W_{final}}{MR} \quad (124)$$

where,

$$W_{final} = W_{ii}\, e^{\left(-\frac{\Delta V}{I_{sp}\, g_e}\right)} \tag{125}$$

4) Initial Weight Prior to Retro Ignition

$$W_{ii} = W_E - W_D - W_{HS} - W_{STR} - W_{STRAPS} \tag{126}$$

5) Drogue Chute Weight

$$W_D = 0.11 \left[\frac{d_D\, q_D}{18.6\ (65)}\right] A_D \tag{127}$$

6) Strap Weight

$$W_{STRAPS} = 0\,05\ W_D \tag{128}$$

7) Rocket Volume

$$V_{OL_R} = \frac{W_R}{\rho_R} = \pi\, d_R{}^3 \left(\frac{L_R}{d_R}\right) \tag{129}$$

8) Rocket Diameter

$$d_R = \left(\frac{W_R\, d_R}{\pi\, \rho_R L_R}\right)^{1/3} \tag{130}$$

9) Landed Impact Weight (Crushup, Payload, and Internal Structure)

$$W_L = W_{ii} - W_R \tag{131}$$

10) Opening Drogue Shock Load

$$P_D = X_D\, q_D\ (C_D A)_D \tag{132}$$

where,

$$q_D = \frac{1}{2}\ \rho_D\ V_D{}^2 \tag{133}$$

Since the retrorocket system has some inherent ΔV error, it should be accounted for so as to ascertain a correct resultant impact velocity which is required in the impact attenuation system.

11) Final Resultant Impact Velocity

$$V_o = V_{imp} \ (1 + \Delta V_{error}) \tag{134}$$

7. Impact Attenuation System

This portion of the program is the impact dynamics of the lander package using crushable material. The intent is to determine the weight and geometric dimensions of the crushable material and residual payload.

The equations presented herein are based on an analysis which accounts for the variation of mass during the crushup stroke and for materials with anisotropic properties.[1] The equations have been derived for the particular case where the crushable material is in the shape of a spherical segment.

There are two options for the type lander configuration and three special cases therein.

a. Option One - Lenticular Shape

1) Lenticular (see Figure 4d).

2) Sphere -- The sphere is a special case of the lenticular with θ_M set equal to 90 degrees (see Figure 4e).

b. Option Two - Spherical Segment Cone-Cylinder Shape

1) Cone-Cylinder --A spherical segment of crushup ($\theta_M \leq 90$ degrees) with a cone and cylinder payload package (see Figure 4a).

2) Cylinder -- A special case of the cone-cylinder with the exception that the cone portion of the payload is deleted (see Figure 4b).

3) Cone --A special case of the cone-cylinder with the exception that the cylinder portion is deleted (see Figure 4c).

a. Lenticular - Option One

This option is capable of handling either a lenticular or spherical shape lander. The sphere portion of the option is utilized by setting θ_M equal to 90 degrees whereas the lenticular utilizes a θ_M of anything between 0 and 90 degrees (see Figures 4d and 4e).

1) Geometry Expression

$$R_2 = \left[\frac{3\,(m_1 + m_c)}{2\pi\,[\rho_i K_1^2\, K_2 + \rho_c \{(1-\cos\theta_M)^2(2+\cos\theta_M) - K_1^2\, K_2\}]} \right]^{1/3} \quad (135)$$

where,

$$m_1 + m_c = \frac{W_L}{g_\oplus}$$

$$K_1 = \left(1 - \frac{y_m}{\epsilon R_2} - \cos\theta_M\right)$$

$$K_2 = \left(2 - \frac{2y_m}{\epsilon R_2} + \cos\theta_M\right)$$

2) Internal Payload and Mass

$$m_1 = \frac{2\pi}{3}\,(\rho_1\, R_2^3\, K_1^2\, K_2) \quad (136)$$

3) Crushup Mass

$$m_C = \frac{2\pi}{3}\,\rho_c\, R_2^3\, [(1-\cos\theta_M)^2(2+\cos\theta_M) - K_1^2\, K_2] \quad (137)$$

4) Maximum Crushing Stress

$$S_m = (\alpha\, \rho_c)^{1/\psi} \quad (138)$$

5) Crushup Thickness

$$t_C = \left(\frac{y_m}{R_2}\right) \frac{R_2}{\epsilon} \quad (139)$$

6) Velocity Expression

$$\frac{V_o^2 (m_1 + m_c)}{4\pi S_m R_2^3} = \int_o^{y_m/R_2} \frac{\left(1 - \frac{y}{\epsilon R_2}\right)^2 \left[I\left(\frac{y}{R_2}\right)\right] d\left(\frac{y}{R_2}\right)}{\left[1 - \frac{\rho_c \pi R_2^3}{m_1 + m_c}\left\{\left(\frac{y}{\epsilon R_2}\right)^2 - \frac{1}{3}\left(\frac{y}{\epsilon R_2}\right)^3\right\}\right]} \quad (140)$$

where,

$$V_o = (V_v^2 + V_w^2)^{1/2}$$

$$u = 1 - \frac{y}{\epsilon R_2}$$

$$I\left(\frac{y}{R_2}\right) = \frac{a_o}{(N-2)}\left[1 - u^{N-2}\right] + \frac{a_1}{2}\frac{(1-u^2)}{(u^2)}$$

$$+ \frac{a_2}{2u}\left[\frac{\cos^{-1} u}{u} - \sqrt{1-u^2}\right]$$

$$+ \frac{a_3}{2}\left[\frac{(\cos^{-1} u)^2}{u^2} - 2\frac{(\cos^{-1} u)}{u}\sqrt{1-u^2} - 2 \ln u\right]$$

The constants a_0, a_1, a_2, a_3, and N are empirically determined and are used to describe the materials anistropy, i. e. the variation of crushing stress with the direction of loading (see Reference 1).

$$S(\theta) = a_o \cos^N \theta + a_1 + a_2\,\theta + a_3\,\theta^2$$

7) Acceleration Expression

$$G_{imp} = \frac{2\pi S_m R_2^2}{(m_1 + m_c)\, g_\oplus}\left[\frac{\left(1 - \frac{y}{\epsilon R_2}\right)^2 \left[I\left(\frac{y}{R_2}\right)\right]}{1 - \frac{\rho_c \pi R_2^3}{m_i + m_c}\left\{\left(\frac{y}{\epsilon R_2}\right)^2 - \frac{1}{3}\left(\frac{y}{\epsilon R_2}\right)^3\right\}}\right] \quad (141)$$

b. Cone-Cylinder-Option Two

This option is capable of utilizing a cone-cylinder, a cone, and a cylinder as the lander payload geometry (see Figures 4a, b, c). The special case of the cylinder is made possible by setting L_{co}/R_{co} equal to zero, whereas the special case of the cone is evolved by setting L_{cyl}/R_{co} equal to zero.

1) Geometry Expression

$$R_2 = \left[\frac{(m_1+m_c) - \frac{\pi\rho_1}{3}\left(\frac{L_{CO}}{R_{CO}}\right) R_{co}^3 \{1+K_3+K_3^2\} - \frac{\pi\rho_1}{3}\left(\frac{R_{CO}}{\sin\theta_M} - \frac{R_{CO}}{\tan\theta_M}\right)^2 \left(\frac{2R_{CO}}{\sin\theta_M} + \frac{R_{CO}}{\tan\theta_M}\right) - \pi\rho_1 R_{CO}^3 \left(\frac{L_{cyl}}{R_{CO}}\right)}{\frac{2\pi}{3}\rho_c (1-\cos\theta_M)} + \frac{R_{CO}^3}{\sin^3\theta_M} \right]^{1/3} \quad (142)$$

where,

$$K_3 = 1 - \frac{L_{CO}}{R_{CO}\tan\theta_{CO}}$$

2) Internal Payload Mass

$$m_1 = \frac{\pi\rho_1 L_{CO}}{3}(R_{CO}^2 + R_{CO}R + R^2) + \frac{\pi\rho_1}{3}\left(R_1 - \frac{R_{CO}}{\tan\theta_M}\right)^2 \left(2R_1 + \frac{R_{CO}}{\tan\theta_M}\right) + \pi\rho_1 R_{CO}^2 L_{cyl} \quad (143)$$

where,

$$R_1 = \frac{R_{CO}}{\sin\theta_M}$$

$$R = R_{CO} K_3$$

and,

$$\frac{y_m}{R_2} = \epsilon\left(1 - \frac{R_{CO}}{R_2 \sin\theta_M}\right)$$

3) Crushup Mass

$$m_c = \frac{2\pi \rho_c}{3} (1 - \cos \theta_M) (R_2^3 - R_1^3) \tag{144}$$

Note that the velocity and acceleration equations are identical as those utilized in the lenticular option.

4) Cylinder Length

$$L_{cyl} = \left(\frac{L_{cyl}}{R_{CO}} \right) R_{CO} \tag{145}$$

5) Cone Length

$$L_{CO} = \left(\frac{L_{CO}}{R_{CO}} \right) R_{CO} \tag{146}$$

8. Engineering Logic

In order to satisfy the geometry constraints of the lander, the impact velocity, and impact G simultaneously, iteration is required between specified values of the crushup density, i.e. $\rho_{c\,min}$ and $\rho_{c\,max}$. Both the lenticular option and the cone-cylinder option are started by using $\rho_{c\,max}$ and then satisfying the geometry and velocity expressions. With these two expressions satisfied, the acceleration equation is checked to see that $G_{peak} \leq G_{specified}$. If this requirement is not satisfied, then ρ_c is decreased by increments towards $\rho_{c\,min}$ until $G_{peak} \leq G_{specified}$. If at $\rho_{c\,min}$, G_{peak} is still greater than $G_{specified}$, then these are the values used, i.e., $\rho_{c_{min}}$ and the associated G and geometry. The method of solution is depicted by a flow diagram in Figure 8.

9. Lander Packaging Design

The intent in this portion of the program is to package the lander (payload and crushup) and descent system within the vehicle such that it both fits within the inboard profile of the vehicle and also satisfies a minimum center of gravity constraint. To include the thickness of the heat shield and structure in the packaging design it is necessary to redefine the lander outer radius as:

$$R_2' = R_2 + t_{H/S} \tag{147}$$

where $t_{H/S}$ is the thickness in feet.

The design is started by placing the lander at the nose of the vehicle, i.e. $\Delta x = 0$; if the constraints are not met, then the lander is moved aft a given Δx until design is made possible. The geometry constraints are cited below

(DOUBLE ITERATION ON t_c AND ρ_c)

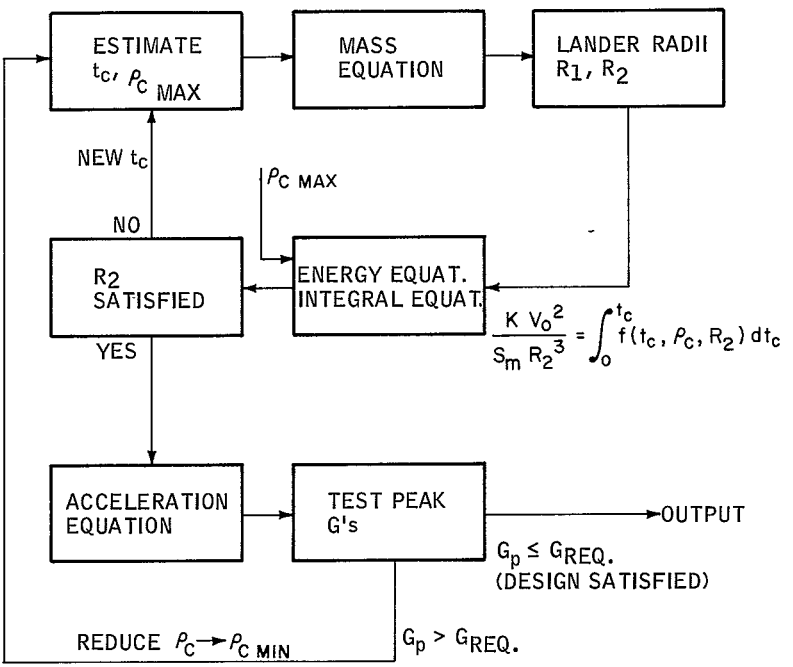

65-11695

Figure 8 METHOD OF SOLUTION OF IMPACT ATTENUATOR DESIGN

a. Lenticular Option

$$2 R_2' (1 - \cos \theta_M) < X_{V_{final}} - \Delta X$$

$$R_2' \sin \theta_M \leq R_C$$

b. Cone-Cylinder Option

$$\left(R_2' - \frac{R_{CO}}{\tan \theta_M} + L_{cyl} + L_{CO} \right) \leq X_{V_{final}} - \Delta X$$

$$R_2' \sin \theta_M \leq R_C$$

If the above geometry constraints are not satisfied, then return to the impact attenuation system and increase ρ_C to $\rho_{C_{max}}$ and find new, smaller lander dimensions. With these new dimensions, check the geometry constraints again.

If $\rho_{C_{max}}$ were already utilized in the impact attenuation system, then stop the problem realizing that packaging is impossible for the given design constraints.

Once the overall geometry constraints are satisfied, one can proceed to check the x and r coordinates of the lander (x_p and r_p) against the inboard profile coordinates x_v and r_v (see Figure 5). An overall logic diagram is shown in Figure 9, depicting the manner in which the packaging is done.

a. Lenticular (Sphere) Option

$$x_p = R_2' (1 - \cos \theta) + \Delta X \,, \quad r_p = R_2' \sin \theta \qquad 0 < \theta \leq \theta_M \tag{148}$$

$$x_p = R_2' (1 - 2 \cos \theta_M + \cos \theta) + \Delta X \,, \quad r_p = R_2' \sin \theta \quad \theta_M \leq \theta < 0 \tag{149}$$

b. Cone-Cylinder Option

$$x_p = R_2' (1 - \cos \theta) + \Delta X \qquad r_p = R_2' \sin \theta \quad 0 \leq \theta \leq \theta_M \tag{150}$$

$$x_p = R_2' (1 - \cos \theta_M) + t \cos \theta_M + \Delta X + L \qquad r_p = R_{CO} \quad 0 \leq L \leq L_{cyl} \tag{151}$$

$$x_p = R_2' (1 - \cos \theta_M) + t \cos \theta_M + L_{cyl} + \Delta X + L \,, \; r_p = R_{CO} - \frac{L}{R_{CO} - R} \tag{152}$$

$$0 \leq L \leq L_{CO}$$

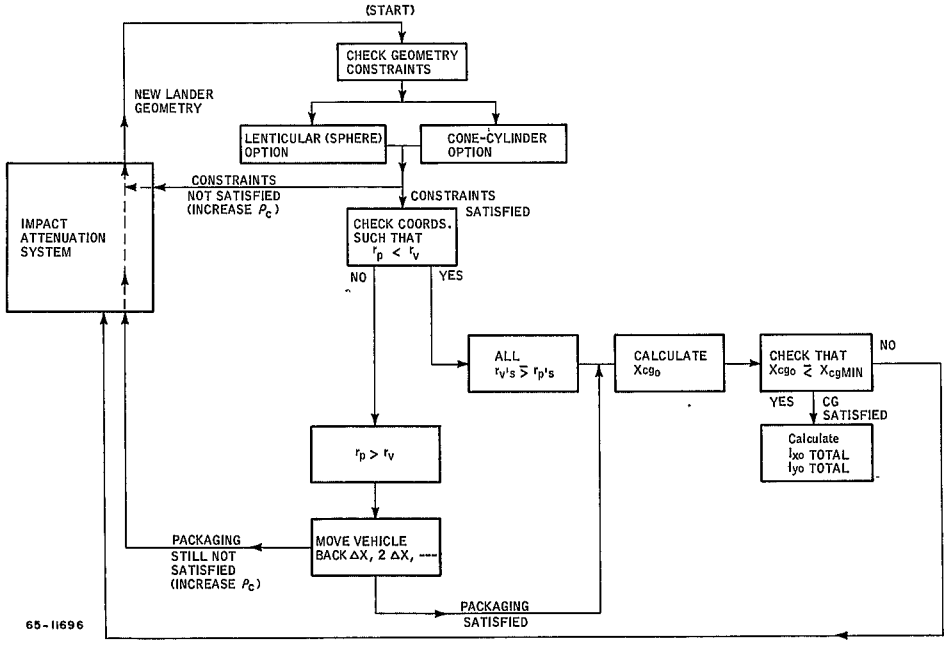

Figure 9 PACKAGING LOGIC DIAGRAM

Vehicle Coordinate Logic -- Solve for x_p from the given equations and then determine which body section x_p occurs. With this established, go to that section and find r_v noting that r_p must be equal to or smaller than r_v.

1) SECTIØN 1.0

$$r_v = R_N \cos\theta \tag{153}$$

where,

$$\theta = \text{arc sin}\left(\frac{R_N - x_p}{R_N}\right)$$

2) SECTIØN 2.

$$r_v = r_1 + R_{SN}(\cos\theta - \cos\theta_N) \tag{154}$$

where,

$$\theta = \text{arc sin}\left(\frac{R_{SN}\ \text{sin}\ \theta_N - x_p + x_1}{R_{SN}}\right)$$

3) SECTIØN 3.

$$r_v = \frac{x_p + r_2\ \cot\theta_c - x_2}{\cot\theta_c} \tag{155}$$

4) SECTIØN 4. and 5.

Linear extrapolation is used for both of these options.

5) SECTIØN 6.

$$r_v = r_3 + R_{SC}(\cos\theta - \cos\theta_3) \tag{156}$$

where,

$$\theta = \text{arc sin}\left(\frac{x_3 + R_{SC}\ \text{sin}\ \theta_3 - x_p}{R_{SC}}\right)$$

and,

a) SECTIØN 3.

$\theta_3 = \theta_C$

$r_3 = R_C - R_{SC} \ (1 - \cos \theta_C)$

$x_3 = x_2 + (r_3 - r_2) \ \cot \theta_c$

b) SECTIØN 4.

$\theta_3 = 90$ degrees

$r_3 = R_C - R_{SC}$

X_3 is the last point in this section.

c) SECTIØN 5.

$\theta_3 = \theta_{3G}$

r_3 and x_3 are the last values of the input tables.

6) SECTIØN 7.

$r_v = R_C$ for all x_p's in this section.

7) SECTIØN 8.

$$r_v = \frac{x_p + R_C \cot \theta_B - x_5}{\cot \theta_B} \tag{157}$$

8) SECTIØN 9.

$$r_v = r_6 + R_{SB} \ (\cos \theta - \cos \theta_B) \tag{158}$$

where,

$$\theta = \text{arc sin} \left(\frac{x_6 + R_{SB} \ \sin \theta_B - x_p}{R_{SB}} \right)$$

9) SECTIØN 10.

$$r_v = R_B - R_{SB} \ (1 - \cos \theta) \tag{159}$$

where,

$$\theta = \arcsin\left(\frac{x_7 - x_p}{R_{SB}}\right)$$

10) SECTION 11.

$$r_v = \frac{x_p + r_8 \cot\theta_A - x_8}{\cot\theta_A} \tag{160}$$

11) SECTION 12.

$$r_v = R_A \cos\theta \tag{161}$$

where,

$$\theta = \arcsin\frac{x_9 + R_A \sin\theta_A - x_p}{R_A}$$

12) SECTION 13.

$$r_v = 0 \tag{162}$$

If for a limiting value of ΔX, the lander still cannot fit within the inboard profile of the vehicle, then the design must return to the impact attenuation system and increase ρ_C to $\rho_{C_{max}}$ so as to assure a smaller dimensional lander which may or may not fit into the vehicle.

If the lander is finally positioned within the vehicle, the overall center of gravity position must be found such as to check the requirement that

$$\text{c.g. overall} \leq \text{c.g. specified}$$

Overall Vehicle Center of Gravity

a. Lenticular (sphere) Option

$$X_{CG_o} = \frac{[1.05(W_D + W_{MC}) + W_c + W_t][\Delta X_f + R_2(1 - \cos\theta_M)] + W_{H/S} X_{CG_{H/S}} + W_R\left(\Delta X_f + \frac{L_R}{2}\right)}{W_e} \tag{163}$$

b. Cone Cylinder Option

$$X_{CG_o} = \frac{W_{H/S}\ X_{CG_{H/S}} + W_R \left(\Delta X_f + \frac{L_R}{2}\right) + W_c\ (\Delta X_f + X_{CGC}) + W_i\ (\Delta X_f + t + X_{CG_i}) + 1.05\ (W_D + W_{MC}) \left(\Delta X_f + t \cos\theta_M + \frac{R_2}{10}\right)}{W_e}$$

where,

$$X_{CGC} = \frac{\left[R_2\ (R_2^3 - R_1^3)\ (1 - \cos\theta_M) - \left(\frac{3R_2^4 - R_1^4}{8}\right) \sin^2\theta_M\right]}{(R_2^3 - R_1^3)\ (1 - \cos\theta_M)} \qquad (164)$$

where,

$$X_{CGi} = \frac{W_{CAP}\ X_{CAP} + W_{cyl} \left(h + \frac{L_{cyl}}{2}\right) + W_{cone}\ (h + L_{cyl} + X_{cone})}{(W_{CAP} + W_{cyl} + W_{cone})}$$

$$W_{CAP} = \frac{\pi h^2 \rho_1}{3}\ (3R_1 - h)\ g_\oplus$$

$$W_{cyl} = \pi \rho_1\ R_{CO}^2\ L_{cyl}\ g_\oplus$$

$$W_{cone} = \frac{\pi \rho_1 L_{CO}}{3}\ (R_{CO}^2 + R_{CO} R + R^2)\ g_\oplus$$

$$X_{CAP} = \frac{\pi}{V_{CAP}} \left(\frac{2h^3 R_1}{3} - \frac{h^4}{4}\right)$$

$$V_{CAP} = \frac{\pi h^2}{3}\ (3R_1 - h)$$

$$X_{cone} = \frac{L_{CO} \left(R_{CO} - \frac{2L_{co}}{3 \tan\theta_{CO}}\right)}{2R_{CO} - \frac{L_{co}}{\tan\theta_{CO}}}$$

$$h = R_1\ (1 - \cos\theta_M)$$

If $x_{cg_{overall}} > x_{cg_{specified}}$, then the design returns to the impact attenuation system and increases ρ_c to $\rho_{c_{max}}$. If $\rho_{c_{max}}$ was already utilized, then packaging is impossible for the given design constraints. If the center of gravity constraint is satisfied, i.e. $X_{CG_O} \leq X_{CG_{specified}}$, then the moments of inertia of the entire vehicle about the overall center of gravity can be established.

Total Moments of Inertia

1) Lenticular (sphere) option

$$I_{x_{TOT/X_{CG_O}}} = \sum I_{x_{H/S}} + \frac{1}{2}\frac{W_R}{g_\oplus}\left(\frac{D_R}{2}\right)^2 + \frac{4\pi}{15}\rho_{c_f}(R_2^5 - R_1^5)\left[2 - \cos\theta_M(\sin^2\theta_M + 2)\right]$$
$$+ \pi\rho_1\left(\frac{4}{3}R_1^2 h^3 - R_1 h^4 + \frac{h^5}{5}\right) + \frac{1.05(W_D + W_{MC})}{2g_\oplus}\left[(R_2 + t_{cc})^2 - R_2^2\right] \quad (165)$$

where,

$$t_{cc} = \frac{0.80(W_D + W_{MC})}{P_{chute}\, R_2^2}$$

$$I_{y_{TOT/X_{CG_O}}} = \sum I_{y_{H/S}} + \frac{W_{H/S}}{g_\oplus}\left[\left(X_{CG_O} - X_{CG_{H/S}}\right)^2 - X_{CG_{H/S}}^2\right]$$
$$+ \frac{W_R}{g_\oplus}\left(\frac{L_R^2}{12} + \frac{D_R^2}{16}\right) + \frac{W_R}{g_\oplus}\left(X_{CG_O} - \Delta X_f - \frac{L_R}{2}\right)^2 \quad (166)$$
$$+ \frac{4\pi}{3}\rho_{c_f} R_2^2 (R_2^3 - R_1^3)(1 - \cos\theta_M) - \pi R_2 \rho_{c_f}(R_2^4 - R_1^4)\sin^2\theta_M$$
$$+ \frac{4\pi}{15}\rho_{c_f}(R_2^5 - R_1^5)(1 - \cos^3\theta_M) + \frac{2\pi}{15}\rho_{c_f}(R_2^5 - R_1^5)\left[2 - \cos\theta_M(\sin^2\theta_M + 2)\right]$$
$$- 2\rho_{c_f} V_s \bar{X}_s^2 + 2\rho_{c_f} V_s \left[R_2(1 - \cos\theta_M) - \bar{X}_s\right]^2$$

$$+ \frac{W_c + W_i + 1.05\,(W_D + W_{MC})}{g_\oplus} \left[X_{CG_O} - \Delta X_f - R_2\,(1 - \cos\theta_M)\right]^2$$

$$+ \pi\rho_1 \left(R_1\, h^4 - \frac{2h^5}{5}\right) + \frac{\pi\rho_1}{2}\left(\frac{4}{3}\,R_1{}^2\, h^3 - R_1\, h^4 + \frac{h^5}{5}\right) - 2\rho_1\, V_{CAP}\, X_{CAP}{}^2$$

$$+ 2\rho_1\, V_{CAP}\,(h - X_{CAP})^2 + \frac{1\,05\,(W_D + W_{MC})}{g_\oplus}\left[\frac{R_2{}^2}{300} + \frac{(R_2 + t_{cc})^2}{4}\right]$$

where,

$$V_S = \frac{2\pi}{3}\,(1 - \cos\theta_m)\,(R_2{}^3 - R_1{}^3)$$

$$\bar{X}_S = \frac{2\pi}{V_S}\left[\frac{R_2\,(R_2{}^3 - R_1{}^3)}{3}\,(1 - \cos\theta_M) - \frac{(R_2{}^4 - R_1{}^4)}{8}\,\sin^2\theta_M\right]$$

b. Cone-cylinder option

$$I_{x_{TOT/X_{CG_O}}} = \sum I_{x_{H/S}} + \frac{1}{2}\,\frac{W_R}{g_\oplus}\left(\frac{D_R}{2}\right)^2 + \frac{2\pi\rho_{c_f}}{15}\,(R_2{}^5 - R_1{}^5)\,[2 - \cos\theta_M(\sin^2\theta_M + 2)] \qquad (167)$$

$$+ \frac{\pi\rho_i}{2}\left[\frac{4}{3}\,R_1{}^2\, h^3 - R_1\, h^4 + \frac{h^5}{5}\right] + \frac{W_{cyl}}{2\,g_\oplus}\,R_{CO}{}^2$$

$$+ \frac{3}{10}\,\rho_i\,\frac{\pi\,L_{co}}{3}\,(R_{CO}{}^2 + R_{CO}R + R^2)\left(\frac{R_{CO}{}^5 - R^5}{R_{CO}{}^3 - R^3}\right) + \frac{1\,05}{2}\,\frac{(W_D + W_{MC})}{g_\oplus}\,[(R_2 + t_{cc})^2 - R_2{}^2]$$

$$I_{y_{TOT/X_{CG_O}}} = \sum I_{y_{H/S}} + \left(\frac{W_{H/S}}{g_\oplus}\right)\,[(X_{CG_O} - X_{CG_{H/S}})^2 - X_{CG_{H/S}}{}^2] \qquad (168)$$

$$+ \frac{W_R}{g_\oplus}\left[\frac{L_R{}^2}{12} + \frac{D_R{}^2}{16}\right] + \frac{W_R}{g_\oplus}\left[X_{CG_O} - \Delta X_f - \frac{L_R}{2}\right]^2$$

$$+ \frac{2\pi}{3}\,\rho_{c_f}\,R_2{}^2\,(R_2{}^3 - R_1{}^3)\,(1 - \cos\theta_M) - \frac{\pi R_2\,\rho_{c_f}}{2}\,(R_2{}^4 - R_1{}^4)\,\sin^2\theta_M$$

$$+ \frac{2\pi}{15}\,\rho_{c_f}\,(R_2{}^5 - R_1{}^5)\,(1 - \cos^3\theta_M) + \frac{\pi}{15}\,\rho_{c_f}\,(R_2{}^5 - R_1{}^5)\,[2 - \cos\theta_M(\sin^2\theta_M + 2)$$

$$- \rho_{c_f} V_S \bar{X}_S^2 + \frac{2\pi}{3} \rho_{c_f} (1-\cos\theta_M)(R_2^3 - R_1^3)(X_{CG_O} - \Delta X_f - \bar{X}_S)^2$$

$$+ \pi\rho_1 \left[\frac{R_1 h^4}{2} - \frac{h^5}{5}\right] + \frac{\pi}{4}\rho_1 \left[\frac{4}{3} R_1^2 h^3 - R_1 h^4 + \frac{h^5}{5}\right] - \rho_1 V_{CAP} \bar{X}_{CAP}^2$$

$$+ \frac{W_{CAP}}{g_\oplus} (X_{CG_O} - \Delta X_f - t_c - \bar{X}_{CAP})^2 + \frac{W_{cyl}}{g_\oplus} \left[\frac{L_{cyl}^2}{12} + \frac{R_{CO}^2}{4}\right]$$

$$+ \frac{W_{cyl}}{g_\oplus} \left(X_{CG_O} - \Delta X_f - t_c - h - \frac{L_{cyl}}{2}\right) +$$

$$+ \frac{W_{cone}}{g_\oplus} \left[\frac{L_{co}^2}{10} \left\{\frac{R_{CO}^2 + 3R_{CO}R + 6R^2}{R_{CO}^2 + R_{CO}R + R^2}\right\} + \frac{3}{20} \left\{\frac{R_{CO}^5 - R^5}{R_{CO}^3 - R^3}\right\}\right]$$

$$- \frac{W_{cone}}{g_\oplus} (X_{cone})^2 + \frac{W_{cone}}{g_\oplus} (X_{CG_O} - \Delta X_f - t_c - h - L_{cyl} - \bar{X}_{cone})^2$$

$$+ \frac{1.05(W_{MC} + W_D)}{g_\oplus} \left[\frac{R_2^2}{300} + \frac{(R_2 + t_{cc})^2}{4}\right] + \frac{1.05(W_{MC} + W_D)}{g_\oplus} \left[X_{CG_O} - \Delta X_f - R_2(1-\cos\theta_M) - \frac{R_2}{10}\right]^2$$

10. Internal Structure

The internal structure consists of a cap or spherical segment, a cylinder, and a cone for all possible lander geometrics. The cap is designed for a buckling mode of failure assuming the maximum stress to be that applied to the crushup during impact. The cylinder is also designed for a buckling mode of failure and assumes the internal payload in the cylinder to be reacted at one end. The cone is designed by assuming it reacts the parachute opening shock load in tension.

a. Lenticular (Sphere) Option

1) Face sheet thickness

$$t_{fs} = 0.117 \left(\frac{S_m}{144\, E_{fs}}\right)^{3/7} (1-\cos\theta_M)^{1/7} R_1 \qquad (169)$$

t_{fs} must be $\geq$ than a minimum gage face sheet $t_{f_{min}}$

2) Area

$$A = 4\pi R_1^2 (1 - \cos \theta_M) \tag{170}$$

3) Internal structure weight

$$W = \frac{\rho_{fs} A t_{fs}}{12} \tag{171}$$

b. Cone-Cylinder Option

1) CAP

$$A_{CAP} = 2\pi R_1^2 (1 - \cos \theta_M) \tag{172}$$

$$t_{fs_{CAP}} = 0.117 \left(\frac{S_m}{144 E_{fs}} \right)^{3/7} (1 - \cos \theta_M)^{1/7} R_1 \tag{173}$$

$$W_{CAP} = \frac{\rho_{fs} A_{CAP} t_{f_{CAP}}}{12} \tag{174}$$

2) Cylinder

$$A_{cyl} = 2\pi R_{CO} L_{cyl} \tag{175}$$

$$t_{fs_{cyl}} = \left(\frac{y_m W_{i\,cyl} L_{cyl}^2}{546 R_{CO} E_{fs}} \right)^{1/3} \tag{176}$$

$$W_{cyl} = \frac{\rho_{fs} A_{cyl} t_{fs_{cyl}}}{12} \tag{177}$$

where,

$$W_{i\,cyl} = W_i \left[\frac{\pi R_{CO}^2 L_{cyl}}{\frac{2\pi R_1^3}{3} (1 - \cos \theta_M) + \pi R_{CO}^2 L_{cyl} + \frac{\pi L_{co}}{3} (R_{CO}^2 + R_{CO} R + R^2)} \right]$$

3) Cone

$$A_{CO} = \pi (R_{CO} + R) \left[L_{co}^2 + (R_{CO} - R)^2\right]^{1/2} + \pi R^2 \tag{178}$$

$$t_{fs_{CO}} = \frac{P_{MC}}{2\pi R_{CO} \sigma_{cy}} \tag{179}$$

$$W_{CO} = \frac{A_{CO} \rho_{fs} t_{fs_{co}}}{12} \tag{180}$$

If the drogue-retrorocket option is used in the descent system then

$$t_{fs_{CO}} = \frac{P_D}{2\pi R_{CO} \sigma_{cy}} \tag{181}$$

The total internal structural weight is the sum of the components; namely,

$$W = W_{CAP} + W_{cyl} + W_{CO}. \tag{182}$$

IV. IBM PROGRAM ROUTINES

A. PROGRAM FLOW

1. Descent System

The program flow for the descent system is shown in Figure 10.

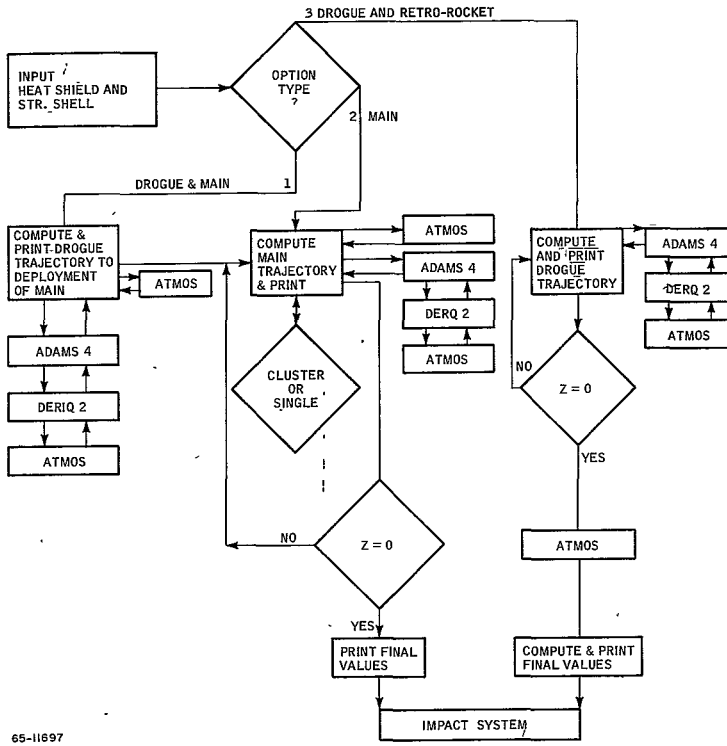

Figure 10 PROGRAM FLOW FOR DESCENT SYSTEM

2. Impact Attenuation System

The program flow for the impact attenuation is shown in Figure 11.

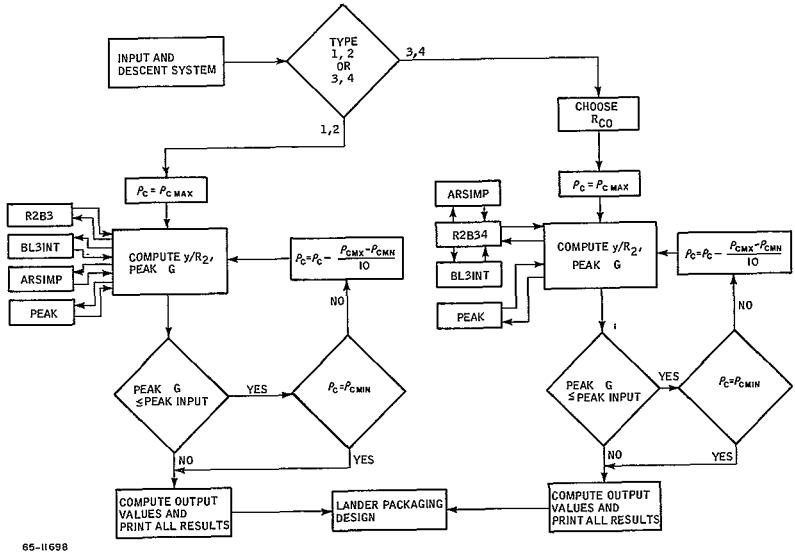

Figure 11 PROGRAM FLOW FOR IMPACT ATTENUATION SYSTEM

3. Lander Packaging Design

The program flow for the lander packaging system is shown in Figure 12.

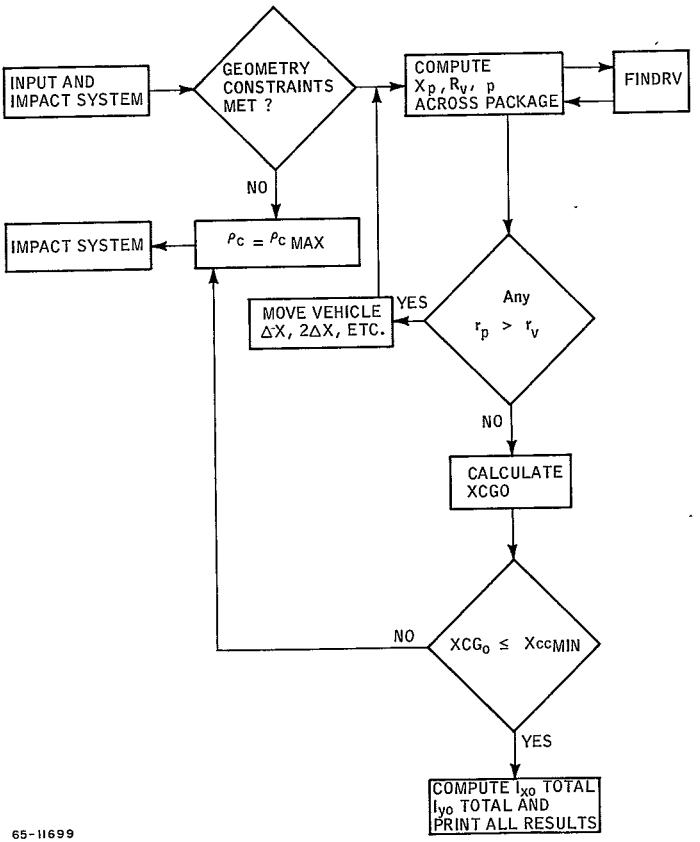

Figure 12 PROGRAM FLOW FOR LANDER PACKAGING SYSTEM

250A

B. COMMON STORAGE

Name	Quantity	Source	Input or Output	Description
AD	A_D	Main	Output	Drogue chute area.
AMC	A_{MC}	Main	Output	Main chute area.
AS	a	ATMØS	Output	Speed of sound.
AV	A_v	DERQZ		Area of vehicle.
CDD	C_{DD}	Input	Input	Table.
CDDD	C_{DD} value	ATMØS	Output	Interpolated value at XMAC.
CDM	C_{DMC} value	ATMØS	Output	Interpolated value at XMAC.
CDMC	C_{DMC}	Input	Input	Table.
CDV	C_{DV}	Input	Input	Table.
CDVV	C_{DV} value	ATMØS	Output	Interpolated value at XMAC.
DV	D_v	Main		Diameter of vehicle.
FALR	L_1	Input		Temperature gradient in troposphere expressed as a fraction of adiabatic lapse rate.
G	G_{SL}	Input		Gravitational acceleration at planet surface.
IJET	JET	Input		Input sentinal.
IISYS	DESSYS	Input		Input sentinal.
MACH	M	Input		Table of Mach numbers.

Name	Quantity	Source	Input or Output	Description
PI	π	Main		
RHØ	ρ	ATMØS	Output	Density.
RHØSL	ρ_{SL}	Input		Density of atmosphere at planet surface.
TSL	T_{SL}	Input		Atmospheric temperature at planet surface.
TST	T_{ST}	Input		Atmospheric temperature in stratosphere.
V	V	Main	Output	Velocity.
WD	W_D	BLØCK2	Output	Drogue chute weight.
WE	We	Input		Total entry weight.
WR	WR	Main	Output	WE - WHSTØT - WSTTØT.
XA	X_A	Input		Mole fraction of Argon in atmosphere.
XC	X_C	Input		Mole fraction of CO_2 in atmosphere.
XMAC	M	ATMØS	Output	Mach number.
XN	X_N	Input		Mole fraction of N_2 in atmosphere.
XZERØ	X_O	Input		Mole fraction of O_2 in atmosphere.

C. SUBROUTINES

Calling Sequences and Definitions

ATMØS	Variable Input or Output Source	AS Output ATMØS	CDD Input Main	CDDD Output ATMØS	CDM Output ATMØS
CDMC Input Main	CDV Input Main	CDVV Output ATMØS	FALR Input Main	G Input Main	RHØ Output ATMØS
RHØSL Input Main	TSL Input Main	TST Input Main	V Input Main	XA Input Main	XC Input Main
XMAC Output ATMØS	XN Input Main	XZERØ Input Main	Z Input Main		

ADAMS4

(See the writeup of ADAMS4 under the section SPECIAL SUBROUTINES.)

ARSIMP

(See the writeup of ARSIMP in the section SPECIAL SUBROUTINES.)

BLOCK2	Variable Input or Output Source	AMVEL Input Input	BEL Input Input	CDD Input Input	CDMC Input Input
CDV Input Input	DD Output BLOCK2	DELMIT Input Input	DLVFAC Input Input	DMCFAC Input Input	DMCMIN Input Input
DMIN Input Input	DNBND Input Input	DR Output BLØCK2	DRVEL Input Input	DV Input Main	FACTØR Input Input

BLØCK2 (Continued)	Variable Input or Output Source	FALR Input Input	FREQ Input Input	FREQ2 Input Input	FREQ3 Input Input
G Input Input	GAMMAD Input Input	GAMMC Input Input	IGØØFX Output	IJET Input Input	IISYS Input Input
PD Output BLØCK2	PMC Output BLØCK2	RHØR Input Input	RHØSL Input Input	TSL Input Input	TST Input Input
TZERØ Input Input	UPBND Input Input	VIMP Input Input	VFINAL Output BLØCK2	VW Input Input	W Input Main
WD Output BLØCK2	WE Input Input	WL Output BLØCK2	WMC Output BLØCK2	WR Input Main	WRØC Output BLØCK2
WWHS Input Main	WWSTR Input Main	XA Input Input	XC Input Input	XD Input Input	XISP Input Input
XLRDR Input Input	XL Input Input	XMACH Input Input	XMC Input Input	XMD Input Input	XMMC Input Input
XMR Input Input	XN Input Input	XZERØ Input Input	ZD Input Input	ZMC Input Input	

BLØCK3	Variable Input or Output Source	ALPHA Input	A0, A1, A2, A3 Input Input	BETA Input Main	CTH1, CTH2, CTH3, CTH6, CTH9 Input Main
CTHM Output Main	DIAM Input	DR Input BLØCK2	EF Input Input	EPS1, EPS3 Input Input	ETA Input Input
GS Input Impact	IBLK3 Output	IGØØFX Output	IISYS Input Input	P Input Main	PD Input BLØCK2
PMC Input BLØCK2	PSI Input Input	Q Input Main	R3, R12, R34, R67 Input Main	RA, RB, RC Input Main	RCHUTE Input Input
RHØF Input Input	RHØI Input Input	RHØMN Input Input	RHØMX Input Input	RØ Output BLØCK3	SIGCYF Input Input
STH1, STH2 STH3, STH6, STH9 Input Input	STHM Output Main	SYSIMC Input	TFMIN Input Input	THC Input Main	THETAM Input Input
THETCØ Input Input	THS Input	TTCØ Output Main	TTHM Output	VFINAL Input Main	VV Input Main
VW Input Main	WC Output BLØCK3	WD Input BLØCK2	WE Input Input	WHSTØT Input Main	WI Output BLØCK3
WMC Input BLØCK2	WRØC Input BLØCK2	WSTTØT Input Main	X3 Input	XCGHS Input Main	XCGMIN Input
XIRDR Input	XITØT Input	XLCRC Input Input	XLCYRC Input Input	XN Input Input	YIR2 Input
YITØT Input					

BL3INT	Variable Input or Output Source	A0, A1, A2, A3 Input Input	DYR2 Input Main	ETA Input Input	FUNC Output BL3INT
GSTAR Input Main	GUNC Output BL3INT	IISYS Input Main	PI Input Main	RHØC Input Main	RØFX Input Main
SM Input Main	SMIMC Input Main	VFINAL Output BL3INT	VV Input Main	VW Input Main	WW4 Output BL3INT
WW5 Output BL3INT	XN Input Input	YR2I Output BL3INT			

DERQZ	Variable Input or Output Source	DERN Output DERQZ	K Input ADAMS4	NPAR Input	NZ Input
PAR Input	T Input Main	VALUE Input ADAMS4			

FINDRV	Variable Input or Output Source	BETA Input Main	CTH1, CTH2, CTH3, CTH6, CTH9 Input Main	I Output FINDRV	P Input Main
Q Input Main	R01, R3, R12 R34, R67 Input Main	RA, RB, RC Input Main	RV Output FINDRV	STH1, STH2, STH3, STH6, STH9, Input Main	THC Input Main
X3 Input	XP Input Main				

GENSHP	Variable Input or Output Source	AREAG Output GENSHP	NX Output GENSHP	PG Output GENSHP	RGEN Input Input
RØLLG Output GENSHP	THET2G Input Input	THET3G Input Input	WLB Input Main	XCGG Output GENSHP	XGEN Input Input

PEAK	Variable Input or Output Source	DYR2 Input Main	ETA Input Input	GSTAR Input Main	PI Input Main
PGGAL Output PEAK	PGGALC Output PEAK	R3BLK3 Input Main	RHØC Input Main	SM Input Main	SMIMC Input Main
YR2 Input Input	YR2I Input Main	YR2P Output PEAK			

R2B3	Variable Input or Output Source	CTHM Input Main	ETA Input Input	PI Input Main	R2BLK3 Output R2B3
RHØC Input Main	RHØI Input Input	SMIMC Input Main			

R2B34	Variable Input or Output Source	A0, A1, A2 A3, Input Input	CTHM Input Main	DRY2 Output R3B34	EPS3 Input
ETA Input Input	GSTAR Input Main	IISYS Input Main	PI Input Main	RCØ Input Main	RHØC Input Main
RHØI Input Input	RØFX Output R2B34	SM Input Main	SMIMC Input Main	STHM Input Main	TTCØ Input Main
VFINAL Input Main	VV Input Main	VW Input Main	XLCRC Input	XLCYRC Input	XN Input Input
YR2I Output					

RP3467	Variable Input or Output Source	PIT3 Output RP3467	RØL3 Output RP3467	RR Input Main	RRR Input Main
THH Input Main	W Input Main	XX Input Main			

TENSHL	Variable Input or Output Source	AREAT Output TENSHL	BETA Input Input	CTH2 Input Main	PITT Output TENSHL
RC Input Input	R3 Output TENSHL	R34 Input Input	RØLLT Output TENSHL	RT2 Input Main	RTEN Output TENSHL
STH2 Input Main	THETA3 Input TENSHL	WLB Input Main	XCGT Output TENSHL	XT2 Input Main	XTEN Output TENSHL

1. GENSHP

a. Purpose

This subroutine computes the surface area, centroid from the nose, and moments of inertia for the general shape.

b. Method

The trapezoidal rule is used, with as many as 25 input values for the coordinates XGEN and RGEN. The number of XGEN and RGEN values are counted.

2. TENSHL

a. Purpose

This subroutine computes the surface area, centroid from the nose and moments of inertia for the tension shell.

b. Method

A set of five ordinate values between R2 and R3 are computed corresponding to five abscissas and the trapezoidal rule is utilized.

3. RP3467

a. Purpose

This subroutine computes the moments of inertia of Sections 6 and 9.

b. Method

The given equations are utilized with the input variables for Sections 6 and 9.

4. BLØCK2

a. Purpose

This subroutine performs a trajectory calculation with three options, a drogue and main chute or cluster, a main chute or cluster, or a drogue chute with a retrorocket.

b. Method

First the program checks which of these three options mentioned above are to be used, and presets initial conditions, including those for the derivative equations. In the drogue chute trajectory, the minimum diameter is used first and the Mach number is repeatedly checked until the time it becomes $\leq$ MACD input. If the corresponding altitude is above ZMC, the program continues with this size drogue chute and prints the trajectory down to ZMC, where it switches to the main chute logic If this altitude is below ZMC, an equation is used to calculate the next drogue chute area. If the altitude is zero, AD is increased by 1.5 (Statement 250) and the program begins again This process of checking the Mach number MACMC against the altitude ZMC is repeated. When again the altutide is tested and it is not within 100 feet of ZMC, the present drogue area is multiplied by ZMC/S at Statement 249 Eventually an area will be found where MACMC occurs within 100 feet of ZMC. Then the trajectory is recalculated, and printed out at intervals specified by DRVEL, the change in velocity Output values for the drogue trajectory are also computed and printed before starting the main chute trajectory.

For the main chute portion, first the area is calculated. Then, if the diameter is less than DMCMIN, the minimum main chute size is used If the diameter is greater than DMCMAX, a cluster of three to fifteen chutes is used. (The number is increased from three to fifteen by intervals of two until a diameter less than DMCMAX is found (See DØ LØØP at Statement 351)). Then the program calculates the filling time for the main chute or cluster, and the initial conditions for the main chute trajectory. The trajectory printout proceeds at intervals of MCVEL changes in velocity until impact. Then final output quantities describing the main chute are calculated and printed

For the drogue-retrorocket option, a trajectory is computed utilizing a specified drogue chute size diameter DDMIN. The program prints out at intervals of DRVEL in velocity from ZD (drogue deployment altitude) to impact The impact velocity on the drogue VD is then taken with a specified horizontal wind velocity VW and the resultant velocity VR is evolved. The required retrorocket ΔV is the difference between the required specified impact velocity VIMP and the resultant velocity VR. With the ΔV established, the sizing of the rocket system commences, i.e diameter, length, and weight.

5. DERQZ

a. Purpose

This subroutine computes the values of the derivatives of velocity, flight path angle, and altitude for the trajectory.

b. Method

Subroutine ATMØS is called to obtain C_D values from which the drag is calculated. The value of the suspended weight Msusp is calculated depending on when the heat shield and structure is to be jettisoned

6. ATMØS

a. Purpose

This subroutine computes the density RHØ and speed of sound AS variations with altitude Z.

b. Method

Initially, Z_{ST} is calculated and compared with the altitude Z in the calling sequence. Then, depending on whether Z is greater or less than Z_{ST}, one or two sets of equations are used to compute the density RHØ and the speed of sound AS.

7. BLØCK3

a. Purpose

This subroutine determines the crushup density (ρ_c) required to absorb the impact energy.

b. Method

First the program determines whether to use the lenticular (sphere) option or the cone-cylinder option. For the lenticular option, the program starts with $\rho_c = \rho_{cmax}$. Then Subroutine R2B3 is called to get R_2^3 . Next BL3INT is called, then ARSIMP. If the y/R2 value is good enough, the program calls PEAK, otherwise it uses a Newton-Raphson approximation

to converge on y/R2. The chosen PGCALC is compared with the input GIMP until PGCALC is less than GIMP. If it is not, ρ_c is reduced by $(\rho_{cmax} - \rho_{cmin})/10$ and the loop starting at Statement 822 continues. If no satisfactory values are found before ρ_{cmin}, is reached, the program continues with the values it has at that time to calculate output equations. Then it goes on to the lander packaging design.

If the cone-cylinder option is used, the iteration starts with $\rho_c = \rho_{cmax}$. Then Subroutine R2B34 is called with a starting value of R_{co}. Next PEAK is called to determine if PGCALC is less than GIMP. If it is, the program computes output equations and goes on to the packaging design. If PGCALC is still too large, ρ_c is reduced by $(\rho_{cmax} - \rho_{cmin})/10$ and the iteration continues from Statement 726. If ρ_{cmin} is reached without a satisfactory PGCALC, the program continues with the ρ_{cmin} value and calculates the output equations and continues on to the packaging design.

Geometry constraints are checked at 901 or 902 depending on which option was used in the impact system, the lenticular (sphere) or cone-cylinder. For the lenticular (sphere) option an array of θ_M values is set up and each x_p and r_p is calculated. Subroutine FINDRV is then called to get r_v. All r_p values must be less than the corresponding r_v values If not, the package must be moved back a distance of 0 025 R_2 along the vehicle axis until a position is found where all the r_p values are acceptable If no such position can be found, the program returns to the impact system with ρ_c equal to $\rho_{c\ max}$

If all the geometry constraints are satisfied, then the overall X_{CGO} is calculated and tested against X_{CGmin}. If X_{CGO} is less than X_{CGmin}, the program continues; otherwise it goes back to the impact system with ρ_c equal to ρ_{cmax}. With X_{CGO} satisfied, the overall moments of inertia are calculated and finally, the internal structural weight.

8. R2B3

a. Purpose

Subroutine R2B3 calculates the value of R2 for the lenticular and sphere option.

b. Method

The program evaluates the expressions for R2, using the values of ρ_c from BLØCK3.

9. BL3INT

a. Purpose

Subroutine BL3INT evaluates the integrand of Equation (140) in preparation for integration by Simpson's Rule.

b. Method

The expressions for the integrand of Equation 140 is evaluated at 11 points between 0 and y_m/R_2.

10. PEAK

a. Purpose

This subroutine determines the maximum value of G during impact.

b. Method

Eleven (11) values of G corresponding to $0 \leq y/R_2 \leq y_m/R_2$ are computed and the maximum of these values is chosen as PGCALC, the output of the routine.

11. R2B34

a. Purpose

This subroutine computes the value of R_2 for the cone cylinder option.

b. Method

Subroutine R2B34 computes the value of R_2 for the cone-cylinder option and calls it RØFX. Then it calls Subroutine BL3INT to evaluate the expression within the velocity integral using this R2. Next R_2 is corrected by a Newton-Raphson approximation. This process is repeated until the R2 value gives a solution within EPS3.

12. FINDRV

a. Purpose

This subroutine determines whether the payload package fits within the vehicle envelope.

b. Method

This subroutine compares the X_p computed in the main program with the abscissas computed in the heat shield and structural shell system until it finds the section in which X falls. Then it calculates the ordinate r_v which will correspond to X_p from the equations in that section.

D. MAIN PROGRAM

The program first sets the values of any preset input, then reads the data into storage as specified by the namelist array INPUT.

After converting angle to radians and computing their sines and cosines, the program begins at Statement 20, computes five (x) and (r) values for the nose cap section which is required to be the first segment. Area, moments of inertia, and centroid from the nose are also calculated after the (x) and (r) values are written on the output tape.

The program then tests to see if the toroidal section following the nose is included. If it is not, starting at Statement 31, theta 2 is set equal to theta 1, and x2 and r2 are set equal to xl and rl If the section is included, five (x) and (r) values are computed and written on the output tape. Then the moments of inertia and centroid from the nose are computed.

Next, at Statements 21 and 28, the program determines which, if any, of the three options (3., 4 , and 5.) for Section 23 is to be used. If none are included, theta 4 is set equal to theta 0, and r4 and x4 are set equal to r2 and x2 Section 34, a toroidal section, has to be included if Section 23 is used.

If the tension shell option is used, five (x) and (r) points are computed and written on the output tape The area, moments of inertia, and centroid from the nose are also calculated. All of these calculations use the trapezoidal rule and subroutine TENSHL, and occur between Statements 34 and 44.

For the general shape option, as many as 25 points may be used to describe the curve. The program proceeds in steps similar to those used for the tension shell, but with subroutine GENERL, between Statements 44 and 42

For the conic section, two (x) and (r) values are computed and written out, followed by area, moments of inertia, and centroid from the nose calculations, between Statements 42 and 52

Then, from Statements 52 to 22, Section 34, is handled a toroidal shape, with five (x) and (r) values which are written on the output tape. Next the area, moments of inertia, and centroid from the nose are calculated. The moments of inertia are calculated in Subroutine RP3467.

Section 45, if included, is a cylinder described by two points. If it is not used, x5 and r5 are set equal to x4 and r4 If used, the two (x) and (r) values are computed and written out. Then the area, moments of inertia, and centroid from the nose are calculated, (Statements 45 to 46).

Section 56, a flared section, is described by two points. If it is not used, x6 and x7 are set equal to x5, and r6 and r7 are set equal to r5. After the two (x) and (r) values are written on the output tape, the area, moments of inertia, and centroid from the nose are calculated. If section 56 is used, section 67 a toroidal segment must be included Five (x) and (r) values are written on the output tape, then the area and centroid from the nose are calculated The moments of inertia are computed in subroutine RP3467. These computations occur between Statements 46 and 24

If section 78, a toroidal section, is not included, x8 is set equal to x7 and r8 is set equal to r7 If used, five (x) and (r) values are computed and written on the output tape. Then the area, moments of inertia and centroid from the nose are calculated, (Statements 24 to 25).

Section 89, if used, is a cone described by two points If it is not included x9 is set equal to x8 and r9 is set equal to r8. When this section is used, two values of (x) and (r) are written on tape, and then the area, moments of inertia, and centroid from the nose are computed, (Statements 25 to 53).

There are two options, 12. and 13 , for the final section, one of which must be used. The first is a cap described by five (x) and (r) values which are written on the output tape. Then the area, moments of inertia, and centroid from the nose are calculated. The other option is a two point base section. Two values of (x) and (r) are written on the output tape, and then the area, moments of inertia and centroid from the nose are calculated. (Statements 51 to 40).

Next, output values for the total heat shield and structure weights, WHS and WST, for each section are calculated. If one or more rings is to be added to the vehicle, the appropriate moments of inertia are computed and printed Then the total vehicle shield and structure weights called WHSTØT and WSTTØT, are calculated along with the vehicle center of gravity XCGHS and moments of inertia RØLLT and PITCHT. Depending on which sections have been included, a tabular printout of section number, area, WHS, WST, and moments of inertia is provided, followed by values of WHSTØT, WSTTØT, XCGHS, and WR, the entry weight less heat shield and structure weights. If WR is found to be less than or equal to zero, work on the present case is terminated, a transfer to Statement 1000 being made for consideration of the next case. If WR is greater than 0, subroutines BLØCK2 and BLØCK3 are called to carry out the rest of the computations for the case Then the transfer to 1000 is made.

E. SIGNIFICANT EQUATIONS

1. MAIN

The programmed expressions for surface areas, center of gravity, moments of inertia, and weight, are very straightforward, and only the case of Section 2 is given here as an example.

Subroutines GENSHP and TENSHL perform similar calculations for the general and tension shell shapes.

$$A = AREA(2) = 2. \cdot \pi \cdot R12 \cdot (R01 \cdot CTH1 \cdot (THETA1 - THETA2) + R12 \cdot (STH1 - STH2) + R12 \cdot CTH1 \cdot (THETA2 - THETA1)) \quad \text{(Statement 1002)}$$

where,

$CTH1 = \cos\theta_1$ $\quad$ $THETA1 = \theta_1$

$STH1 = \sin\theta_1$ $\quad$ $THETA2 = \theta_2$

$STH2 = \theta_2$

$X = XCG(2) = WS1 \cdot (WS2 + WS3)$ (Statement 9210)

$WS1 = 2. \cdot \pi \cdot R12/AREA(2)$

$WS2 = A121 \cdot B12 \cdot (THETA1 - THETA2) + B12 \cdot R12 \cdot (STH1 - STH2)$

$WS3 = A121 \cdot R12 \cdot (CTH1 - CTH2) - \frac{(R12)^2}{2} \cdot ((STH1)^2 - (STH2)^2)$

where,

$CTH2 = \cos\theta_2$

$WS1 = 2. \cdot \pi \cdot WLBS(2) \cdot R12/32.17$

$A121 = R1 - R12 \cdot CTH1$

$B12 = X1 + R12 \cdot STH1$

$WS2 = (A121)^2 (THETA1 - THETA2) + 3. (A121)^2 \cdot R12 \cdot (STH1 - STH2)$

$WS3 = 3. \cdot A121 \cdot (R12)^2 \cdot ((THETA1 - THETA2)/2. - (SINF(2. \cdot THETA2))/4)$

$WS4 = \frac{(R12)^3}{3} \cdot (STH1 \cdot ((CTH1)^2 + 2.) - STH2 \cdot ((CTH2)^2))$

$RØLL(2) = WS1 \cdot (WS2 + WS3 + WS4)$ (Statement 1002)

where,

$WLBS(2) = WHS(2) + WST(2) \cdot STRFAC$ (Statement 54)

$WS2 = A121 \cdot (B12)^2 \cdot (THETA1 - THETA2) + 2. \cdot A121 \cdot B12 \cdot R12 \cdot B12 \cdot R12 \cdot (CTH1 - CTH2)$

$WS3 = A121 \cdot (R12)^2 \cdot ((THETA1 - THETA2)/2. - (SINF(2. \cdot THETA1) - SINF(2. \cdot THETA2))/4) + (B12)^2 \cdot R12 \cdot (STH1 - STH2)$

$WS4 = B12 \cdot (R12)^2 \cdot ((STH1)^2 - (STH2)^2) - \frac{(R12)^3}{3} \cdot ((STH1)^3 - (STH2)^3)$

$PITCH(2) = WS1 \cdot (WS2 + WS3 - WS4) + .5 \cdot RØLL(2)$ (Statement 9210)

$WHSTØT = \Sigma\ WHS(I)$ (Statement 1016)

$WSTTØT = \Sigma\ WST(I)$

2. BLØCK2

$W_D = WD = .11 \cdot DIAD/18.6 \cdot QD/65. \cdot AD$ (Statement 4444)

$P_D = PD = XD \cdot QD \cdot CDDGGI \cdot AD$

where,

CDDGGI is value from CDD table versus Mach

A_{mc} = AMC = (2. · G · SUSPM)/(RHØSL · CDM · $(VV)^2$) (Statement 501)
C_D cluster = CDCL = CDM · (95 - .03 AN)

A_{mc} = area of each chute in a cluster = AMC = (2. · G · SUSPM)/
(RHØSL · CDCL · $(VV)^2$ · AN) (Statement 321)
W_{mc} cluster = WMC = .0013 · QMC · AMC · AN · (98 + .045 · AN) (Statement 215)
t_f = TF = DMC · (05 - 3.E-5 · VMC) (Statement 214)
V_R = VR = SQRTF($(VD)^2$ + $(VW)^2$) (Statement 406)
ΔV = DELV = VR - VIMP
W_f/W_i = WFWI = EXPF (-DELV/(XISP · GTHET)) (Statement 411)

3. DERQZ

$\dot{V}$ = DERN(1) = (-D-SM · G · SGAM)/SM (Statement 2)
$\dot{\gamma}$ = DERN(2) = (-G · CGAM)/V
$\dot{Z}$ = DERN(3) = V · SGAM

4. ATMØS

M = AM = 28. · XN + 32. · XZERØ + 44. · XC + 40. · XA
C_p = CP = R/AM · (3.5 · (XN + XZERØ) + 4. · XC + 2.5 · XA)
Lo = AL = -FALR · G/CP
ZST = ZST = (TST - TSL)/AL
T = TSL + AL · Z

Troposphere

FAC = -1. - AM · G/(R · AL)
ρ = RHØ = ((TSL + AL · Z)/(TSL)^{FAC}) · RHØSL
FAC1 = CP · AM/R - 1. (Statement 4)
a = AS = SQRTF ((CP · T)/FAC1)

Stratosphere

ρST = RHØST = ((TST/(TSL)^{FAC}) · RHØSL (Statement 2)
ρ = RHØ = RHØST · EXPF (-(AM · G)/(R · TST) · (Z - ZST)
a = AS = SQRTF ((CP · TST)/FAC1)

5. BLØCK3

SMIMC = WL/32.2
Sm = SM = SBLK3 = (ALPHA · $(RH\emptyset C)^{(1./PSI)}$)
t = TBLK3 = YR2 · R213/ETA
R213 = $(R2BLK3)^{(1./3.)}$
$I(y/R_2)$
WS1 = 1. - YR2/ETA (Statement 832)
WS2 = 2. · π /3. · R2BLK3
WS3 = $(WSI - (CTHM)^2)$ · (2. · WS1 + CTHM)
FMI = RHØI · WS2 · WS3
WS4 = $(1. - (CTHM)^2)$ · (2. + CTHM) - WS3
FMC = RHØC · WS2 · WS4
WS1 = π · RHØI · CØP/3. · $((RC\emptyset)^2 + RC\emptyset \cdot RWS + (RWS)^2)$ (Statement 925)
WS6 = π · RHØI/3. · $(RP1 - RC\emptyset/(TTHM)^2)$ · (2. RP1 + RCØ/TTHM)
+ π · RHØI · $(RC\emptyset)^2$ · CYP
FMI = WS1 + WS6
FMC = 2. · π · (RHØC/3. · (1. -CTHM) · RØFX - $RC\emptyset/(STHM)^3$)
WS3 = WHSSTT · XCGHS + WRØC · (DEL4 + XLR · .5) (Statement 987)
WS1 = (1.05 · (WD + WMC) + WC + WI) · DEL4 + R2BK3 · (1. - CTHM)) (Statement 988)
XCGØ = (WS1 + WS3)/WE (Statement 991)

where,

WHSSTT = WHSTØT + WST TØT
$X_{CG_{CR}}$ = XCGCR = 3. · (R2BK3 · WS1/3. · (1. - CTHM) - $((R2BK3)^4$ (Statement 987)
- $(R1BK3)^4$) / 8. · $(STHM)^2$)/((1 - CTHM) · WS1)
WS1 = $(R2BK3)^3$ - $(R1BK3)^3$
h = H = R1BK3 · (1. - CTHM)
X_{CG_i} = XCGI = (WCAP · XCAP + WCYL · (H + XLCY · .5)
+ WCØN · (H + XLCY + XCØN)) / WCAP + WCYL + WCØN)
WCAP = WS2 · $(H)^{2/3}$ · (3. · R1BK3 - H)
WCYL = WS2 · $(RC\emptyset)^2$ · XLCY
WCØN = WS2 · XLC/3. · $((RC\emptyset)^2 + RC\emptyset \cdot RBK3 + (RBK3)^2)$
XCØN = XLC · (RCØ - (2. XLC)/(3. · TTCØ))/(2. · RCØ - XLC/TTCØ)
VCAP = π · $(H)^{2/3}$ · (3. · R1BK3 - H)
XCAP = π / VCAP · $(2./3 \cdot (H)^3 \cdot R1BK3 - .25 \cdot (H)^4)$
WS2 = RHØI · π

Lenticular

$$I_{x_{T\emptyset T/XCG_o}}$$

$$WS1 = WR\emptyset C/(2. \cdot GSTAR) \cdot (.5 \cdot (DR)^2) \quad \text{(Statement 990)}$$

$$WS2 = 2. \cdot \pi /15. \cdot RH\emptyset C \cdot WS10 \cdot (2. - CTHM\ ((STHM)^2 + 2.))$$

$$WS10 = (R2BK3)^5 - (R1BK3)^5$$

$$WS3 = \pi \cdot RH\emptyset I/2. \cdot (4./3. \cdot (R1BK3)^2 \cdot (H)^3 - R1BK3 \cdot (H)^4 + (H)^{5/5.})$$

$$WS4 = 1.05/2. \cdot (WD + WMC)/GSTAR \cdot ((R2BK3 + (TC)^2) - (R2BK3)^2)$$

$$XIT\emptyset T = \Sigma\ R\emptyset LL(I)$$

$$XT\emptyset TCG = XIT\emptyset T + WS1 + WS2 + WS2 + WS3 + WS3 + WS4$$

$$TC = (8 \cdot (WD + WMC))/(RCHUTE \cdot (R2BK3)^2)$$

Cone - Cylinder

$$I_{x_{T\emptyset T/SCG_o}}$$

$$WS16 = .5\ WCYL/GSTAR \cdot (RC\emptyset)^2 + .3 \cdot RH\emptyset I \cdot \pi \cdot XLC/3. \cdot ((RC\emptyset)^2 \quad \text{(Statement 994)}$$

$$+ RC\emptyset \cdot RBK3 + (RBK3)^2\ (((RC\emptyset)^5 - (RBK3)^5)/((RC\emptyset)^3 - (RBK3)^3))$$

$$XT\emptyset TCG = XIT\emptyset T + WS1 + WS2 + WS3 + WS16 + WS4$$

Lenticular

$$I_{y\ T\emptyset T/XCG_o}$$

$$WS5 = WHSTT/GSTAR \quad \text{(Statement 990)}$$

$$WS6 = (XCG\emptyset - (XCGHS)^2) - (XCGHS)^2$$

$$WS7 = WR\emptyset C/GSTAR \cdot (((XLR)^2)/12. + (DR)^{2/16.}) + (XCG\emptyset - DEL4 - (XLR/2.)^2)$$

$$WS8 = 2. \cdot \pi/3. \cdot RH\emptyset C \cdot (R2BK3)^2 \cdot WS11 \cdot (1. - CTHM) - \pi \cdot R2BK3 \cdot RH\emptyset C/2. \cdot ((R2BK3)^4 - (R1BK3)^4) \cdot (STHM)^2 + 2./15. \cdot RH\emptyset C \cdot \pi \cdot WS10 \cdot (1. - (CTHM)^3) + \pi/15. \cdot RH\emptyset C \cdot WS10 \cdot /(2. - CTHM \cdot ((STHM)^2 + 2.))$$

$$WS11 = (R2BK3)^3 - (R1BK3)^3$$

$$VS = 2. \cdot \pi/3. \cdot (1. - CTHM) \cdot WS11$$

$$XBARS = 2 \cdot \pi/VS \cdot (R2BK3 \cdot WS11/3. \cdot (1. - CTHM) - ((R2BK3)^4 - (R1BK3)^4)/8.\ (STHM)^2)$$

$$WS9 = RH\emptyset C \cdot VS \cdot (XBARS)^2$$

$$WS12 = 1.05 \cdot (WMC + WD)/GSTAR \cdot (R2BK3)^{2/300.} + ((R2BK3 + TC))^{2/4.})$$

$$WS13 = 2. \cdot RH\emptyset C \cdot VS \cdot ((R2BK3. \cdot (1. - CTHM) - (XBARS))^2$$

$$WS14 = (WI + WC + 1.05 \cdot (WD + WMC))/GSTAR \cdot ((XCG\emptyset - DEL4 - R2BK3 \cdot (1. - CTHM)))^2$$

$$WS15 = 2. \cdot (\pi \cdot RH\emptyset I \cdot (R1BK3 \cdot (H)^{4/2.} - (H)^{5/5.}) + \pi \cdot RH\emptyset I/4. (4./3 \cdot (R1BK3)^2 \cdot (H)^3 - R1BK3 \cdot (H)^4 + (H)^{5/5.})) - 2. \cdot RH\emptyset I \cdot VCAP \cdot (XCAP)^2 + 2. \cdot RH\emptyset I \cdot VCAP \cdot ((H - XCAP))^2$$

$$YIT\emptyset T = \Sigma\ PITCH(I)$$

$$YT\emptyset TCG = YIT\emptyset T + WS5 \cdot WS6 + WS7 + 2. \cdot WS8 - 2. \cdot WS9 + WS13 + WS14 + WS15 + WS12$$

Cone - Cylinder

$$I_{y_{T\emptyset T/XCG_o}}$$

$$WS17 = 2. \cdot \pi/3 \cdot RH\emptyset C \cdot (1\ CTHM) \cdot ((R2BK3)^3 - (R1BK3)^3) \cdot ((XCG\emptyset - DEL4 - XBARS))^2$$ (Statement 994)

$$WS19 = WCAP/GSTAR \cdot ((XCGO - DEL4 - TBK3 - XCAP))^2 + WCYL/GSTAR \cdot (((XLCY)^{2/12.} + (RC\emptyset)^{2/4.} \cdot (+ (XCG\emptyset - DEL4 - TBK3 - H - XLCY/2.))$$

$$WS18 = \pi \cdot RH\emptyset I \cdot (R1BK3 \cdot (H)^{4/2.} - (H)^{5/5.}) + \pi/4. \cdot RH\emptyset I \cdot 4./3 \cdot (R1BK3)^2 \cdot (H)^3 - R1BK3 \cdot (H)^4 + (H)^{5/5.} \cdot (- RH\emptyset I \cdot VCAP \cdot (XCAP)^2$$

$$WS20 = WC\emptyset N/GSTAR \cdot ((XLC)^2 \cdot .1 \cdot ((RC\emptyset)^2 + 3. \cdot RC\emptyset \cdot (RBK3)^2)/((RC\emptyset)^2 + RC\emptyset \cdot RBK3 + (RBK3)^2) \cdot .15 \cdot (((RC\emptyset)^5 - (RBK)^5)/((RC\emptyset)^3 - (RBK3)^3))$$

$$WS21 = WC\emptyset N/GSTAR \cdot (XC\emptyset N)^2 - ((XCG\emptyset - DEL4 - TBK3 - H - XLCY - XC\emptyset N))^2)$$

$$WS22 = 1.05 \cdot (WMC + WD)/GSTAR \cdot ((XCG\emptyset - DEL4 - R2BK3 \cdot (1. - CTHM) - .1 \cdot R2BK3))^2$$

$$YT\emptyset TCG = YIT\emptyset T + WS5 \cdot WS6 \cdot WS7 + WS8 - WS9 + WS17 + WS18 + WS19 + WS20 - WS21 + WS12 + WS22$$

6. R2B3 (Lenticular Option Only)

$$WS1 = ((1. - YR2/ETA - CTHM))^2$$

$$WS2 = 2. -2. \cdot YR2/ETA + CTHM$$

$$WS3 = RH\emptyset I \cdot WS1 \cdot WS2$$

$$WS4 = RH\emptyset C \cdot (((1. - CTHM))^2 \cdot (2. + CTHM) - WS1 \cdot WS2)$$

$$R2BLK3 = (3 \cdot SMIMC)/(2. \cdot \pi \cdot (WS3 + WS4))$$

271<

7. BL3INT

WS1 = SQRTF (1. - $(U)^2$)/U
WS2 = ACØS (U) (Statement 3)
WS3 = $(U)^2$
WS4 = 0. or BØ / (XN-2.) (1. - $(U)^{(XN-2)}$
YR2I(I) = WS4 + B1.. 5 (1. /WS3 -1.)+ B2..5 ·(WS2/WS3 - WS1)
+ B3 · .5· (($(WS2)^2$/$(U)^2$ - 2. ·WS2·WS1 - 2.· LØGF(U)) (Statement 4)

where,

BØ = A0, B1 = A1, B2 = A2, B3 = A3
U = 1. - YR2P(I)/ETA
YR2P(I) = (I-1)·DYR2 (Statement 2)
Vo
VFINAL = SQRTF ($(VV)^2$ + $(VW)^2$)
WS1 = YR2P(I)/ETA
WS3 = RHØC π /SMIMC
WW4 = ((1. WS1))^2 YR2I(I)
GUNC(I) = WS3 ($(WS1)^2$ - $(WS1)^3$/3
WW5(I) = 1. - RØFX GUNC(I)

$$\int_0 \text{FUNC(I)} = \int_0^{Y_m/R_2} \text{WW4 (I) / WW5(I)}$$

8 PEAK

WS1 = YR2P(I)/ETA
WS2 = 2. π SM $(R213)^2$/(SMIMC GSTAR)
WS3 = RHØC π R2BLK3/SMIMC
WS4 = ((1. - WS1))^2 YR2I(I)
WS5 = 1. - WS3 ($(WS1)^2$ - $(WS1)^{3/3.}$)
PGCAL(I) = WS2 WS4/WS5 (Statement 817)

9. R2B34

$$YMR2 = ETA\ (1. - RC\emptyset/(R\emptyset FX)^{.33333333}\ STHM)$$
$$WS2 = 1. - XLCRC/TTC\emptyset \qquad \text{(Statement 5)}$$
$$WS3 = 2.\ \pi/3.\ RH\emptyset C\ (1. - CTHM)$$
$$WS1 = SMIMC/WS3$$
$$WS4 = \pi/3.\ RHOI\ XLRC\ (1\ + WS2 + (WS2)^2)$$
$$WS5 = \pi\ RH\emptyset I/3.\ ((1./STHM - STHM))^2\ (2.\ 1STHM + CTHM/STHM)$$
$$WS6 = (WS4 - WS5 - \pi\ RH\emptyset I\ XLCYRC)/WS3$$
$$WS7 = WS6 + 1./(STHM)^3$$
$$R\emptyset FX = WS1 + WS7\ (RC\emptyset)^3 \qquad \text{(Statement 8)}$$

V. REFERENCES

1. Cloutier, G. J., Dynamic Analysis of Crushable Material Impact Energy Absorbers, Avco/RAD Technical Report KHDR-15 (June 1965).

2. Performance of and Design Criteria for Deployable Aerodynamic Decelerators, Wright-Patterson Air Force Base Technical Report No. ASD-TR-61-579 (December 1963).

3. Turner, R. D., A Parachute Design Study for a Mars Entry Vehicle, Cook Electric Company, Report No. FR-3707B (September 1964).

274

PROGRAM 1883

RADIATION HEATING PROGRAM (1883)

CONTENTS

I.	Introduction	1
	A. General Description	1
	B. Calculation Model	1
II.	Usage	10
	A. Input Definitions	10
	B. Input Procedures	11
	C. Output Definitions	11
	D. Sample Problem	13
	E. Diagnostics	14
III.	Computations	21
	A. Block Diagram	21
	B. Symbols	21
	C. Equations	22
IV.	IBM Routines	34
	A. Program Flow	34
	B. Main Program	34
	C. Subroutines	35
	D. Significant Equations	45
V.	References	52

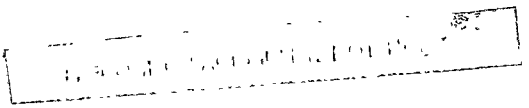

276

ILLUSTRATIONS

Figure	1	Typical Zone Model for Program 1883	2
	2	Calculation Model for Option to Compute Delta	7
	3	Shock Detachment Distance for Oblate Ellipsoids	7
	4	Comparative Results for 30 Percent CO_2 - 70 Percent N_2	9
	5	Block Diagram for Program 1883	21
	6	Flow Diagram for Program 1883	34

TABLES

Table	I	Tabular Values of $\bar{\epsilon}$	8

I. INTRODUCTION

A. GENERAL DESCRIPTION

Program 1883 computes the equilibrium gas properties in the stagnation region behind a normal shock, and the associated radiative heating, given ambient conditions of density, temperature, and molecular composition of the atmosphere, the shock standoff distance and the flight velocity. The shock standoff distance can also be computed, provided sufficient body shape data are given, based on the correlation of standoff distance stored in the program.

B. CALCULATION MODEL

During hypervelocity entry, the state of the gas behind a bow wave can vary from a highly ionized state to a molecular and atomic state. Enumerating all the likely species to be encountered throughout entry to solve the thermodynamic state of the gas would require an equal number of equations to be solved simultaneously. The present approach is an approximate method which divides the thermodynamic states into 4 zones, wherein only a few major reactions govern the state of the gas result in simplified and more rapid solutions for the state conditions. For example, Figure 1 illustrates the variation in specie concentrations with temperature, and typical zone demarcation lines are indicated for initially pure CO_2 The zone division is performed automatically by testing enthalpy and pressure.

Assumptions include:

1. Rigid rotator molecules
2. Harmonic oscillators
3. Electronic energy states are not considered beyond 70,000°K
4. The enthalpy of all molecules is taken as 0 at 0°K
5. Equilibrium thermodynamics apply
6. Only several major reactions govern the thermodynamic state at any time.

The calculation model is described in detail in Reference 1, and a summary is presented herein for completeness.

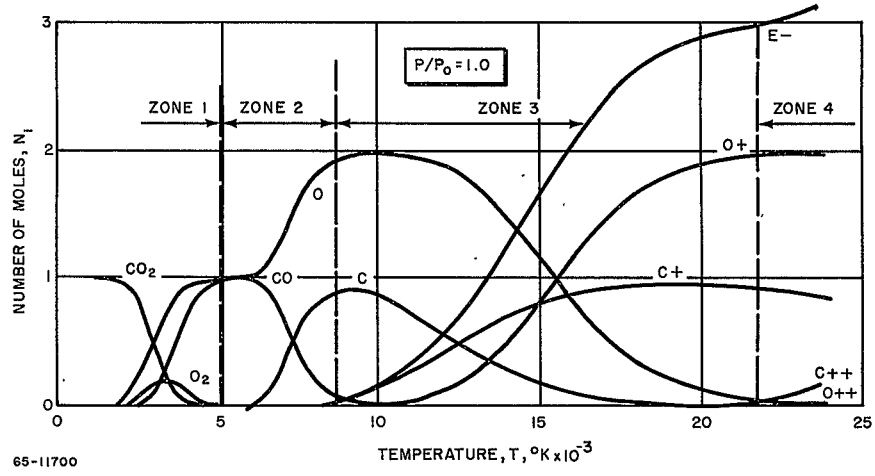

Figure 1 TYPICAL ZONE MODEL FOR PROGRAM 1883

1. Stagnation Point Conditions

During hypervelocity entry, the state of the gas behind a bow shock can vary from highly ionized to atomic and molecular states. Enumerating all the likely species to be encountered throughout entry would require an equal number of equations to be solved simultaneously. In general, a sufficient number of chemical reaction equations,

$$\sum a_i A_i \rightleftharpoons \sum b_i B_i$$

(where A_i are the reactants, B_i the products, and a_i, b_i, the stoichiometric coefficients) must be formulated, such that taken together with the element and charge conservation equations, we are able to solve for the specie concentrations. The present program considers 19 species, 4 elements and electrons and hence there are 14 reaction equations and 5 conservation equations.

The elements considered are carbon, oxygen, nitrogen, and argon; however, the conservation relationships are utilized in terms of the molecular concentrations of nitrogen, carbon dioxide, oxygen, and argon as they appear in the atmosphere. The complete reaction matrix is given in Table I-13, page 46, of Reference 1.

The 14 reactions could be solved at each point along the trajectory using the method of the minimization of free energy, e. g. Reference 2, page 207. Since the reactions cover the whole range of species to be encountered, at any one time only a few of them will be important, which leads to the alternate method of solving a small number of concentration equations simultaneously. The latter approach, demonstrated by Hansen[3] for air, is utilized in the present program.

For each reaction, an equation involving an equilibrium constant is formulated:[2, 3]

$$K_p = \frac{\Pi [X(B_i)]^{b_i}}{\Pi [X(A_i)]^{a_i}} \left(\frac{P}{Z}\right)^{b_i - a_i}$$

where Z is the compressibility factor and represents the number of moles of gaseous products per mole of reactants, and $X(A_i)$ and $X(B_i)$ are the moles of reactants and products, respectively.

The equilibrium constants are, in turn, calculated from kinetic theory using spectroscopic and structural aspects of the individual molecules, atoms and ions. [2, 3]

The equilibrium constants are expressible as

$$\ln K_p = -\frac{\Delta E_o}{RT} + \sum b_i \ln Q_p(B_i) - \sum a_i \ln Q_p(A_i)$$

where $Q_p(A_i)$ and $Q_p(B_i)$ are the partition functions of the individual molecules, atoms, ions, and electrons, and ΔE_o is the change in the zero point energy for the reaction. The expressions for the equilibrium constants and partition functions are given in Reference 1, Tables I-15 and I-18.

The partition functions and equilibrium constants are given in terms of pressure and temperature and hence the solution to the species concentrations is obtained for these two-state variables. During entry, sufficient trajectory data exist to compute the total enthalpy and to estimate the stagnation pressure closely, and hence an iterative solution of the specie concentrations is required to determine the temperature of the gas as well, such that the stagnation enthalpy is matched. The enthalpy of the gas given by:

$$\frac{HM}{RT_o} = \sum X_i \left(\frac{H_i M}{RT_o} \right)$$

must equal the stagnation enthalpy during flight:

$$\frac{HM}{RT_o} = \frac{V^2}{2} \frac{M}{RT_o} + \frac{h_a M}{RT_o} .$$

The stagnation pressure is approximated as:

$$P \cong \frac{\rho V^2}{2116} .$$

The velocity (V) is input in fps, the density as RHOA in slug/ft^3, and the ambient temperature TA in degrees Kelvin(^{o}K).

For the approach selected, of solving a limited number of key concentration relationships simultaneously, a priori knowledge is required of the relative importance of the reactions for various flight conditions. Hence, tabular data were computed and stored in the program as Table I-19 in Reference 1, which specifies zones of HM/RT_o and P, where the number of simultaneous algebraic equations for the species concentrations can be optimized. The dominant reactions in each zone are discussed in Reference 1.

The general nature of the solution proceeds as follows

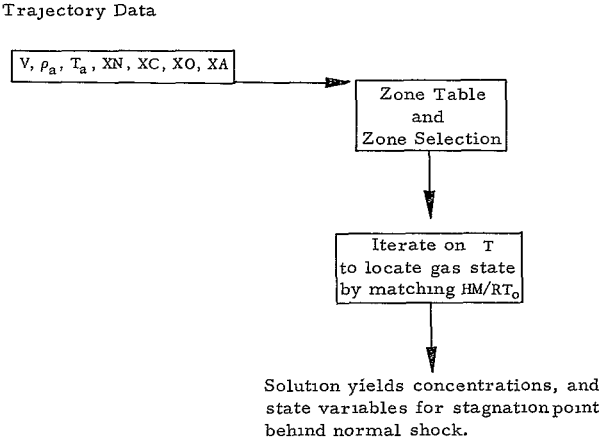

The radiation heating is computed for a parallel slab of gas at uniform stagnation temperature and pressure of thickness (Δ) DELTA. The heating is given by:

$$QR = \bar{\epsilon}\sigma T^4$$

where σ = the Stefan-Boltzmann constant. The calculated emissivity of the gas accounts for absorption, and is given as:

$$\bar{\epsilon} = 1 - 2E_3(\Sigma\tau_i)$$

where τ_i is the optical path length of each radiating specie,

$$\tau_i = 15.24 \frac{\epsilon_i}{L} \Delta$$

and $E_3(\tau)$ is defined as:

$$E_3(\tau) = \int_0^1 s e^{-\tau/s} \, ds \, .$$

Tabular values of $1 - 2E_3(\tau)$ are shown in Table I and are used in the computer program.

$$\frac{\epsilon_i}{L} = C_i \frac{N_i}{5.4 \times 10^{19}} \cdot \frac{e^{-T_i/T}}{(T \times 10^{-4})^{n_i}}$$

where N_i is the particle density of the radiating species.

The values of C_i, T_i, n_i for the corresponding species X_i are given in Table I-20 in Reference 1. A detailed discussion of the radiation heating model is given in Reference 1 also. The standoff distance (Δ) may be input, or the nose geometry can be input, in terms of RN, RSN, THN as shown in Figure 2 which utilizes the correlations of Reference 5 as shown in Figure 3.

2. Limitations

The limitations of the calculation model are discussed in Reference 1, page 49, from the point of view of the kinetic theory approximations.

The flight speed range and atmosphere limits are governed by the range of species considered. Doubly ionized carbon, oxygen, and nitrogen ions

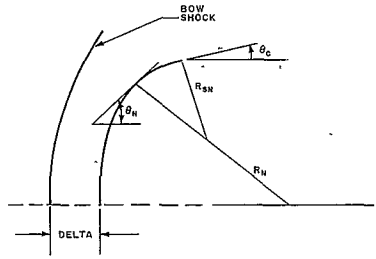

65-11701

Figure 2 CALCULATION MODEL FOR OPTION TO COMPUTE DELTA

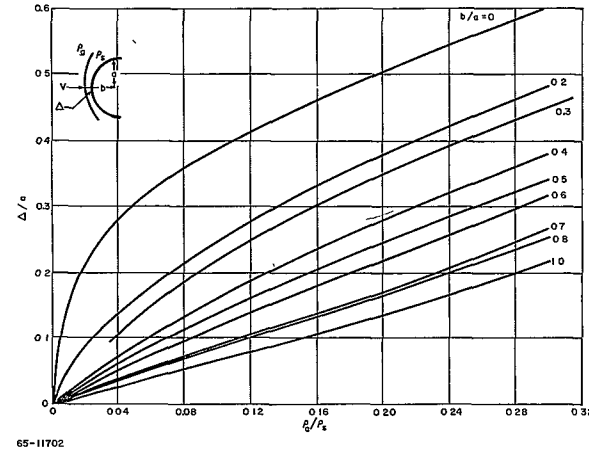

65-11702

Figure 3 SHOCK DETACHMENT DISTANCE FOR OBLATE ELLIPSOIDS

284

and singly ionized argon are considered in the extreme temperature range, hence, the calculable flight speed regime is higher for mixtures without argon. As the program was developed primarily for high-speed studies, its use for low-temperature work, corresponding to flight velocities below 8000 fps, is not recommended.

Because of the nature of the algebraic equations, several limitations arise in specifying concentrations; both the concentrations of argon and oxygen can be specified as zero, but the concentrations of CO_2 and N_2 should be greater than 10^{-3}.

The radiation model uses the parallel slab approximation and assumes an isothermal gas layer of uniform composition; hence, the results will tend to be conservative, especially at large radiative heating rates when the radiation heat loss approaches the energy content of the gas. This limit has been treated by Wick,[6] Yoshikawa and Chapman.[7]

The limitations of the model to predict the standoff distance are discussed under Program 1880.

Comparative results obtained from Program 1883 with those obtained from JPL and Ames Programs are given in Figure 4.

TABLE I

TABULAR VALUES OF τ

TAUTBL		EFSTBL(ϵ)	
(1)	0	(1)	0
(2)	0.01	(2)	0 02
(3)	0.05	(3)	0 092
(4)	0 1	(4)	0 168
(5)	0 2	(5)	0 298
(6)	0 3	(6)	0 400
(7)	0 4	(7)	0 486
(8)	0 5	(8)	0 558
(9)	0 6	(9)	0 618
(10)	0 7	(10)	0 668
(11)	0 8	(11)	0 712
(12)	0 9	(12)	0 750
(13)	1 0	(13)	0 782
(14)	1 1	(14)	0 810
(15)	1 2	(15)	0 834
(16)	1 3	(16)	0 854
(17)	1 4	(17)	0 872
(18)	1.5	(18)	0 888
(19)	1 6	(19)	0 900
(20)	1 7	(20)	0 912
(21)	1 8	(21)	0 923
(22)	1 9	(22)	0 932
(23)	2 0	(23)	0 939
(24)	2 5	(24)	0 967
(25)	3 0	(25)	0 982
(26)	3 5	(26)	0 990
(27)	4 0	(27)	0 994
(28)	6 0	(28)	0 999
(29)	10 0	(29)	1 00
(30)	1 0E + 10	(30)	1 00

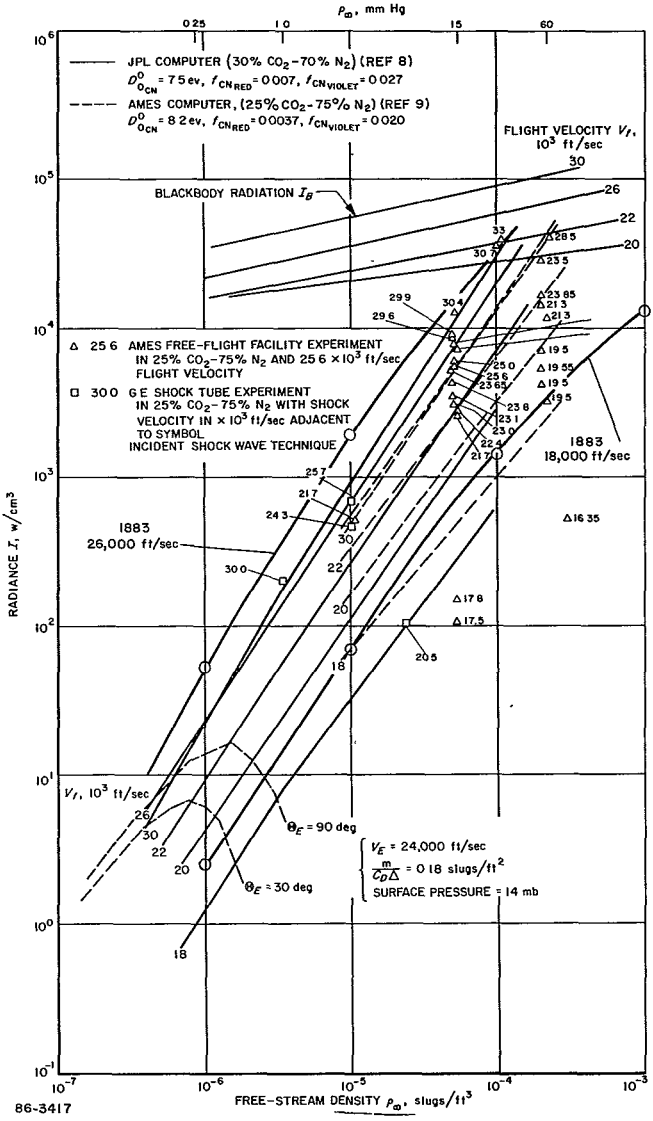

Figure 4 COMPARATIVE RESULTS FOR 30 PERCENT CO_2 - 70 PERCENT N_2

II. USAGE

A. INPUT DEFINITIONS

External Name	Preset Values	Symbol	Parameter	Units
ATMØS			A number of the form XX.XX for identification.	--
CASE			A number of the form XX.XX for identification.	--
DATE			A number of the form XX.XX for identification.	--
DELTA	0.	Δ	Shock detachment distance. If = 0, Δ is computed from a geometry correlation.	feet
MEMØ			A number of the form XX.XX for identification.	--
RC	0.		Cylinder radius.	feet
RHØA	0.	ρ_a	Ambient density.	slug/feet^3
RN	0.	R_N	Nose radius used for Δ correlation (see DELTA).	feet
RSN	0.	R_{SN}	Shoulder radius for Δ correlation (See DELTA).	feet
TA	0.	T_a	Ambient temperature.	°K
THN	0.	θ_N	Nose angle used for Δ correlation (See DELTA).	degrees
V	0.	V	Vehicle velocity.	ft/sec
VEHICL			A number of the form XX.XX for vehicle identification.	--
XA	0.	XA	Mole fraction of A in atmosphere.	--

2874

External Name	Preset Values	Symbol	Parameter	Units
XC	0.	XC	Mole fraction of CO_2 in atmosphere.	----
XN	0.	XN	Mole fraction of N_2 atmosphere	----
XØ	0.	XØ	Mole fraction of $Ø_2$ atmosphere	----

B. INPUT PROCEDURES

The following procedures are to be observed when formulating inputs for Program 1883:

1. All data are numerical and may be written with decimal points.

2. Since all variables have been preset to 0., before the first case, only those which are to be non-zero must be input.

3. The concentrations of oxygen and argon may be equal to zero; however, the concentrations of nitrogen and carbon dioxide should not be less than 0.001.

4. Argon is included only in Zones 1 and 2 and hence, if the flight conditions are outside of these limits, one must ensure that the concentrations of oxygen, carbon dioxide, and nitrogen total unity.

5. A set of computer input forms are provided for the user. All the data shown on the form is keypunched when the variable is supplied.

C. OUTPUT DEFINITIONS

External Name	Preset Values	Symbol	Parameter	Units
ATMØS	ATMØS		Number of the form XX.XX used for identification of the atmosphere.	--
CASE	CASE		Number of the form XX.XX used for identification of the case.	--
DATE	DATE		Number of the form XX.XX used for identification of the problem run.	--
DELTA	DEL	Δ	Detachment distance.	feet
EPSILØN	EPBAR	$\bar{\epsilon}$	Total effective emissivity.	--

External Name	Internal Name	Symbol	Parameter	Units
EPSILON (I)	EPS	ϵ_i	Table of emissivities for each radiation source.	--
HD/HS	HDHS	H_D/H_S	Ratio of dissociation enthalpy to stagnation enthalpy.	---
HM/RTØ	HRT	HM/RT_o	Stagnation enthalpy ratio.	---
MEMØ	MEMØ		Number of the form XX. XX used for identification of the problem run.	---
QI	QI		Radiative heating contribution of each source.	Btu/ft^2-sec.
QR	QSUM		Total radiation heating at stagnation point.	Btu/ft^2-sec.
RHØS/RHØ	RHØST	ρ_S/ρ_a	Ratio of stagnation density to ambient density.	---
TS	T	T_S	Stagnation temperature.	°K
VEHICL	VEHICL		Number of the form XX. XX for vehicle identification.	--
X	X	X_i	Specie concentration.	moles
ZS	Z	Z	Total moles of species.	moles

1. Chemical Terms

Although conventional chemical symbols are utilized in the text and especially in writing chemical reactions, the symbols used in the program and occurring on the program printout sheets must include only captial letters without subscripts. The following table summarizes the nomenclature for all the species considered in the program:

Program Symbol	Chemical Symbol	Chemical Name
Ø	O	Atomic oxygen
Ø2	O_2	Molecular oxygen

Program Symbol	Chemical Symbol	Chemical Name
C	C	Atomic carbon
CØ2	CO_2	Carbon dioxide
CØ	CO	Carbon monoxide
N	N	Atomic nitrogen
N2	N_2	Molecular nitrogen
A	A	Argon (monatomic)
Ø+	O^+	Singly ionized atomic oxygen
Ø++	O^{++}	Doubly ionized atomic oxygen
C+	C^+	Singly ionized atomic carbon
C++	C^{++}	Doubly ionized atomic carbon
N+	N^+	Singly ionized atomic nitrogen
N++	N^{++}	Doubly ionized atomic nitrogen
N2+	N_2^+	Single ionized molecular nitrogen
A+	A^+	Singly ionized argon
CN	CN	Cyanogen
NØ	NO	Nitric oxide
E-	e^-	Electrons

D. SAMPLE PROBELM

1. Statement of Problem

Determine the radiation heating for a specified flight condition for a gas mixture of 51.2 percent nitrogen and 48.8 percent carbon dioxide.

2. Input Form

The input form containing the necessary data is shown on a following page. Case 1 typifies the input when the vehicle geometry is specified, and Case 2 is the optional input of specifying the shock stand off distance. All the variable names for which data are given should be keypunched.

3. Output Form

The output is shown on the following pages. The keypunched data are shown and should be compared with the input form. The emissivities of each specie contributing to the radiation are given as well as the total emissivity including self absorption (grey gas approximation).

The stagnation temperature, compressibility factor, shock density ratio, radiation heating, enthalpy, and dissociation energy are given. The concentrations of the individual constituents are given as well as the radiation contributions of the species considered.

E. DIAGNOSTICS

The number of messages are given in the printout reflecting the following program diagnostics.

1. NØ VALID SØLUTIØN

The equilibrium gas dynamics (1883) solution was not able to obtain a solution with positive concentrations for all the species satisfying the elemental and charge conservation relationships. In this case, the data is linearly interpolated between the last and the next point for which a solution is found.

2. NØT CØNVERGED IN 30 ITERATIØNS

The equilibrium gas dynamics (1883) solution was unable to converge within 30 iterations to within 1 percent on the enthalpy; use the last value found.

RAD 2-0863
5 63

DIGITAL COMPUTER INPUT REQUEST FORM	PROBLEM NO 1883	PROGRAMMER D. Gillespie
	TITLE Radiation Heating Program	

MEMO NO	SECTION NO	WORK ORDER NO	(E240 USE ONLY)	REQUESTED BY	EXT	EST TIME	PAGE 1 OF 1 PAGES

$INPUT

DATE = _____, MEMØ = _____, CASE = _____, ATMØS = _____, VEHICL = _____,

DELTA	= _____,	RSN	= _____,	XA	= _____,
RC	= _____,	TA	= _____,	XC	= _____,
RHØA	= _____,	THN	= _____,	XN	= _____,
RN	= _____,	V	= _____,	XØ	= _____,

$

RAD 2-0963
5 63

DIGITAL COMPUTER INPUT REQUEST FORM	PROBLEM NO 1883	PROGRAMMER D. Gillespie
	TITLE Radiation Heating Program	

MEMO NO	SECTION NO	WORK ORDER NO	(E240 USE ONLY)	REQUESTED BY	EXT	EST TIME	PAGE 1 OF 1 PAGES
1	K420	W305-050-0005		P. Levine	2996		

$INPUT

DATE = _____, MEMØ= 1., CASE = 1., ATMØS = 3., VEHICL= _____,

DELTA	= _____,	RSN =	.6768,	XA	= _____,
RC	= 6.7681,	TA =	100.,	XC	= .488,
RHØA	= 1.21E-6,	THN =	66.92,	XN	= .512,
RN	= 16.2434,	V =	19705.,	XØ	= _____,

$

* MEMORY MAP *

SYSTEM -00000 THRU 02717
FILE BLOCK ORIGIN 02720
FILES 1. UNIT05
2. UNIT06
FILE LIST ORIGIN 02750
PRE-EXECUTION INITIALIZATION 02754
CALL ON OBJECT PROGRAM 02777
OBJECT PROGRAM 03004 THRU 46035

DECK ORIGIN CONTROL SECTIONS (/NAME/=NON 0 LENGTH, (LOC)=DELETED, *=NOT REFERENCED)

1. SAR2TL	03004	AR2TLU	03306										
2. I883	03957	.....	04166 *										
3. SGETN1	04162	GETN1	06152										
4. SHVST1	06216	HVST1	12205										
5. SARTLU	13223	ARTLU	13435										
6. SHEAT1	13606	HEAT1	15754										
7. SFNDH1	16157	FINDH1	16516										
8. SGETQ1	16633	GETQ1	20707										
9. SGETK1	21031	GETK1	21363										
10. SFNDT1	21523	FINDT1	21754										
11. SZONS1	22070	ZONES1	25624										
12. .LXCON	25767	.LXSTR	25767 *	.LXSTP	25773	.LXOUT	26041	.LXRTN	26053	IBEXIT	26053 *		
		.LXCAL	25056 *	.LXERR	26056	.DBCLS	26240 *	.LXARG	26407	.LO	26432 *		
		.CCSE	26440	.LFBL	26441 *	.LUNB	26442	.DFOUT	26443				
13. .IODEF	26447	.DEFIN	26447	.ATTAC	26453 *	.CLOSE	26455	.OPEN	26457	.READ	26461		
		.WRITE	26463	.BSR	26473 *	.READR	26503	.RELES	26505 *	.LAREA	26516		
		.LFBLK	26534	.LTSX	26537 *	.AREA1	26551	.LUN8L	26557	.ENTRY	26563		
		.GJA	26616	.GO	26622	.DERR	26636	.NOPXI	26637	.CUMXI	26641		
		.EX34	26663										
14. .LXSL	26670	.LXSEL	26670	.LXGSEL	26671	.LXTST	26674 *	.LXOVL	26734 *	.LXRCT	26745 *		
		.LXIND	27014 *	.LXDIS	27017 *	.LXFLG	27020 *	.LTCH	27021				
15. .FPFRP	27027	.FPFT.	27027 *	.FPOUT	27156	.FPARG	27164	/.COUNF/	27166 *	.OVFLOW	27232 *		
16. .ERAS.	27237	E.1	27237	E.2	27240	E.3	27241	E.4	27242				
17. .XCC.	27243	CC.1	27243	CC.2	27244	CC.3	27245	CC.4	27246				
18. XIT	27247	EXIT	27247	.EXIT.	27247 *								
19. .FXEM	27250	.FXEM.	27250	.FXOUT	27605	.FXARG	27613	/.OPTW./	27667				
20. FOUT	27700	.FOUT.	27700										
21. FCNV	30242	.FCON.	30242	.FCNV.	30265 *	.ENDFS	30300	.CNVSW	30302	.FOX1	30306		
		.FOX2	30307	.DBC	30311	.DBC8	30432	.DBC9	30435	.DBC10	30442		
		.DBS20	30470	.DOSW	30500	.DDFIX	30507	.FIXSW	30515	.DBBC	30572		
		.DDRS1	31044	.DDRS2	31046	.D1	31051	.D2	31053	.FERR2	31140 *		
		.ANPT	31174	.ONPT	31211	.LNTP	31265	.AOUT	31334	.DFLT	31352		
		.FLT	31506	.DEXPN	31576	.FXD	31577	.HOUT	31727	.INTG	31777		
		.LOUT	32115	.DOUT	32134	.XCF	32165	.TEST	32672	.KOUNT	32675		
		.LIST	32700	.DONE	32711	.OUTBF	32755	.BUF	33003	.QSTO	33004		
		.WIDTH	33005	.GAIN	33006	.GAIN1	33007	.FRDBF	33017	.DDFL	33042		
		.DDFLG	33043	.MQD	33044	.PEX	33045	.FEXP	33046	.DIG	33047		
22. FIOS	33067	.FIOS.	33067	.FSEL.	33227	.FILR.	33233	.FRTB.	33242 *	.FRTD.	33247		
		.FILL.	33252	.FCLS	33254 *	.FOPN	33260 *	REOF	33264 *	.TOUT.	33427		
		.REEO	33435 *	.BIN	33436 *	.FCT	33437	.FCKSZ	33441 *				
23. FIOH	33523	.FIOH.	33523	.FFIL.	34312	.FRTN.	34337 *						
24. FWRB	34524	.FWRB.	34524										
25. FWRU	34550	.FWRU.	34550										

```
26. FWRO    34574    .FWRO.  34574    .FREST  35077 *
27. FRDU    35201    .FRDU.  35201
28. UN05    35242    .UN05.  35242
29. UN06    35243    .UN06.  35243    .BUFSZ  35244
30. FIOU    35247    .FIOU.  35247    .CTUIO  35722    .NMLST  35745    .NAME.  37050    .INTAP  37051
31. JPLRT   37474    POLROT  40651
32. JCDIV   40734    COMDIV  40775
33. JPRT1   41033    POLRT1  41216
34. FLOG    41315    ALOG10  41315 *  ALOG    41317
35. FXPF    41456    EXP     41456
36. FSCN    41576    COS     41576    SIN     41600
37. FSQR    42007    SQRT    42007
38. FXP3    42114    .XP3.   42114
39. .IOCS   42241    .L(0)   42241    .HONSW  42261    .TEOR   42330    .DEFI.  42410    .JOINX  42454 *
                     .CL35   42473    .ATTC.  42506    .SH1    42720 *  .SH9    42762 *  .OPEN.  43003
                     .OP4    43031 *  .OP7    43062 *  .OP9.2  43076 *  .RLSE.  43150    .RER2.  43150
                     .READ.  43151    .RER1.  43174    .WRIT.  43176    .MNTIA  43364 *  .EOFEX  43445 *
                     .FEEIT  43515    .GTIOX  43536    .RW7    43654 *  .RET    44273 *  .ENDTR  44734
                     .SEL59  44736 *  .BSR.   45347    .EOTOF  45474    .ETOF3  45502 *  .SWITC  45531
                     .TCHEX  46032    .BASIO  46035 *

40. .IOCSM  46036

I/O BUFFERS                          46036 THRU  77741

UNUSED CORE                          77742 THRU  77777

$INPUT

V      =        0.19705000E 05,
XN     =        0.51200000E 00,
XO     =        0.00000000E-38,
XA     =        0.00000000E-38,
XC     =        0.48800000E 00,
THN    =        0.66920000E 02,
RN     =        0.16243400E 02,
RC     =        0.67691000E 01,
RHOA   =        0.12100000E-05,
TA     =        0.10000000E 03,
DELTA  =        0.00000000E-38,
ATMOS  =        0.30000000E 01,
VEHICL =        0.99900000E 01,
RSN    =        0.67680000E 00,
DATE   =        0.40100000E 01,
MFMO   =        0.10000000E 01,
CASE   =        0.10000000E 01,
$ END
```

```
DATE    4.01  CASE    1.00  MEMO    1.00  ATMOS    3.00  VEHICLE    9.99

UNDRFLOW AT 40753 IN MQ

UNDRFLOW AT 40763 IN AC AND MQ.

UNDRFLOW AT 40763 IN MQ

UNDRFLOW AT 40763 IN AC AND MQ.

UNDRFLOW AT 40763 IN MQ

EPSILON(I), I=1 TO 21

 1    8.79953E-06  2    7.14842E-05  3    3.60825E-09  4    0.00000E-39  5    6.99787E-04  6    0.00000E-39
 7    0.00000E-39  8    4.43364E-08  9    1.53081E-08 10    2.96127E-03 11    4.62941E-03 12    8.68609E-05
13    1.20091E-06 14    1.15892E-06 15    2.31807E-07 16    5.56989E-30 17    3.82328E-26 18    6.93851E-22
19    1.15973E-04 20    0.00000E-39 21    0.00000E-39

EPSILON BAR =    8.57623E-03 DELTA =    9.92675E-01

          TS                ZS                RHOS/RHO          QR                HD/HS              HM/RTO

     0.56528459E-04    0.16122614E-01    0.17042358E 02    0.44432617E 02    0.58907126E 00    0.28240456E 03

                X(MOLAR CONC.)                                  QI
 N2            0.39843028E 00          N2 1            0.45589495E-01
 CO2           0.00000000E-38          N2-2            0.37035265E 00
 CO            0.47152183E 00          N2              0.18693974E-04
 O2            0.00000000E-38          CO2-13          0.00000000E-38
 O             0.49955057E 00          CO              0.36255298E 01
 N             0.22135297E-00          O2-S-R          0.00000000E-38
 CN            0.85885380E-03          O2              0.00000000E-38
 NO            0.49276015E-02          O               0.22970241E-03
 C             0.15619319E-01          N               0.79309766E-04
 O+            0.16934164E-04          CN-RED          0.15342035E 02
 N+            0.53380483E-05          CN VIO          0.23984492E 02
 C+            0.87616135E-04          NO B-G          0.45001797E 00
 E-            0.11103584E-03          NO 16           0.62217899E-02
 N++           0.00000000E-38          NO              0.60042313E-02
 O++           0.00000000E-38          C               0.12009694E-02
 C++           0.00000000E-38          O+              0.28857057E-25
 N2+           0.11474966E-05          N+              0.19808027E-21
 A             0.00000000E-38          C+              0.35947726E-17
 A+            0.00000000E-38          N2+             0.60084711E 00
                                       A-              0.00000000E-38
                                       A+              0.00000000E-38

$INPUT

V       =          0.19705000E 05,

XN      =          0.51200000E 00,

XO      =          0.00000000E-38,

XA      =          0.00000000E-38,

XC      =          0.48800000E 00,

THN     =          0.66920000E 02,

RN      =          0.16243400E 02,

RC      =          0.67681000E 01,

RHOA    =          0.12100000E-05,

TA      =          0.10000000E 03,

DELTA   =          0.10107000E 01,

ATMOS   =          0.30000000E 01,

VEHICL  =          0.99900000E 01,

RSN     =          0.67680000E 00,

DATE    =          0.40100000E 01,

MEMO    =          0.10000000E 01,

CASE    =          0.20000000E 01,

$ END
```

DATE 4.01 CASE 2.00 MEMO 1.00 ATMOS 3.00 VEHICLE 9.99

EPSILON(I),I=1 TO 21

1	8.95931E-06	2	7.27822E-05	3	3.67377E-09	4	0.00000E-39	5	7.12494E-04	6	0.00000E-39
7	0.00000E-39	8	4.51415E-08	9	1.55861E-08	10	3.01504E-03	11	4.71947E-03	12	8.84382E-05
13	1.22272E-06	14	1.17996E-06	15	2.36016E-07	16	5.67103E-30	17	3.89270E-26	18	7.06450E-22
19	1.19079E-04	20	0.00000E-39	21	0.00000E-39						

EPSILON-BAR = 8.73196E-09 DELTA = 1.01070E-00

TS	ZS	RHOS/RHO	QR	MD/MS	MN/RTO
0.56528459E-04	0.16122614E-01	0.17042358E-02	0.45239440E-02	0.58907126E-00	0.28240456E-03

	X(MOLAR CONC.)		QI
N2	0.39843028E 00	N2 1	0.46417324E-01
CO2	0.00000000E-38	N2 2	0.37707764E-00
CO	0.47152183E 00	N2	0.19033626E-04
O2	0.00000000E-38	CO2 13	0.00000000E-38
O	0.49955057E 00	CO	0.36913635E 01
N	0.22135297E-00	O2 S-R	0.00000000E-38
CN	0.85885380E-03	O2	0.00000000E-38
NO	0.49276015E-02	O	0.23387343E-03
C	0.15619319E-01	N	0.80749900E-04
O+	0.16934164E-04	CN REO	0.15620621E-02
N+	0.59380483E-05	CN VIO	0.24420011E 02
C+	0.87616195E-04	NO B-C	0.45818955E-00
E-	0.11103584E-03	NO 16	0.63347673E-02
N++	0.00000000E-38	NO	0.61132581E-02
O++	0.00000000E-38	C	0.12227770E-02
C++	0.00000000E-38	O+	0.29381053E-25
N2+	0.11474966E-05	N+	0.20167708E-21
A	0.00000000E-38	C+	0.36600477E-17
A+	0.00000000E-38	N2+	0.61175769E 00
		A	0.00000000E-38
		A+	0.00000000E-38

III. COMPUTATIONS

A. BLOCK DIAGRAM

The block diagram for Program 1883 is given in Figure 5.

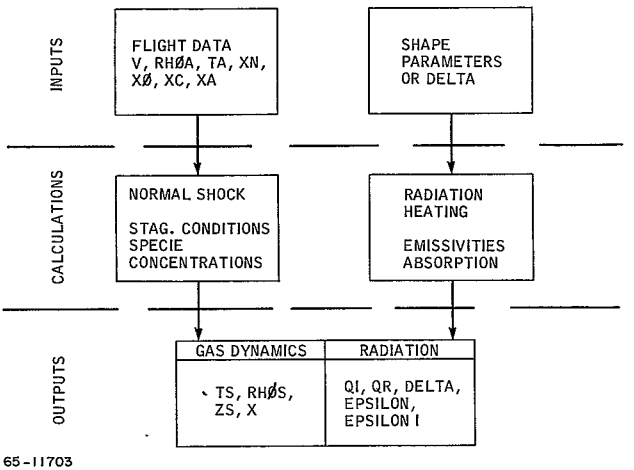

Figure 5 BLOCK DIAGRAM FOR PROGRAM 1883

B. SYMBOLS

E_o	zero point energy
H_i	total enthalpy of ith specie, Btu/mole
H	total enthalpy, Btu/mole
K_{pi}	equilibrium constant for i^{th} reaction
M	mean molecular weight of atmosphere
N_i	number density of ith specie, particles/cm^3

2984

P	pressure, atmospheres
R	universal gas constant
QR	equilibrium radiative heating rate, Btu/ft^2-sec
T_a	atmospheric temperature, °K
T	temperature, °K
T_o	reference temperature, 273.16 °K
V	flight velocity, fps
$X( )$	molar concentration
XA, XC, XN, XO	molar concentrations of argon, carbon dioxide, nitrogen, and oxygen in atmosphere
Z	compressibility factor; number of moles of products per mole reactants
$\frac{\epsilon_i}{L}$	emissivity per unit thickness, cm^{-1}
τ_i	optical path length, feet
$\bar{\epsilon}$	emissivity, accounting for absorptivity (smeared out model)
ρ_a	atmospheric density, $slug/ft^3$

C. EQUATIONS

1. Basic Equations

a. Enthalpy

$$\frac{H_i M}{RT_o} = \frac{E_{oi}}{RT_o} + \frac{T^2}{T_o}\left(\frac{\partial \ln Q_i}{\partial T}\right)_P \qquad (1)$$

$$\frac{HM}{RT_o} = \Sigma X_i \left(\frac{H_i M}{RT_o}\right) \qquad (2)$$

b. Energy of Dissociation

$$\frac{H_D M}{R T_o} = \sum_i X_i \frac{E_{oi}}{R T_o} \tag{3}$$

c. Equilibrium Constants

The equilibrium constants for all the reactions used in the program are given as a function of (T, P) in Reference 1, Table I-15.

d. Partition Functions

The partition functions for all the species considered in the program are given as a function of (T, P) in Reference 1, Table I-18.

e. Zero Point Energies

The zero point energies used are given in Reference 1, Table I-14. It is important to note that the values for all molecules are zero.

2. Zone 1

a. Major Species

1) Six major species considered:

Six major species considered

$X(N2)$, $X(CO_2)$, $X(O_2)$, $X(A)$, $X(CO)$, $X(O)$

b. Major Specie Reactions

$$CO_2 \rightarrow CO + 1/2\, O_2$$

$$O_2 \rightarrow 2O$$

c. Major Specie Conservation Equations

$$X(N_2) = XN \tag{4}$$

$$X(CO_2) = XC - X(CO) \tag{5}$$

$$X(O_2) = XO + (1/2)\, X(CO) - (1/2)\, X(CO) \tag{6}$$

$$X(A) = XA \tag{7}$$

d. Equilibrium Constants for Major Species Reactions

$$K_{P1} = \frac{[X(CO)]\sqrt{[X(O_2)]}\ \sqrt{P}}{[X(CO_2)]\sqrt{Z}} \tag{8}$$

$$K_{P2} = \frac{[X(O)]^2\ P}{[X(O_2)]\ Z} \tag{9}$$

Total moles: (10)

$$Z = \Sigma X_i = 1 + (1/2)\,X(CO) + (1/2)\,X(O)$$

e. General Solution

There can be as many as six major species governing the thermodynamic state of the gas. Hence, six equations are required to be solved (identified as Equations (4) through (9)). The auxiliary equation for the compressibility factor Z is given by Equation (10). Making use of Equations (5) and (6), and combining Equations (8) and (9), an explicit solution for the CO concentration can be found, namely,

X(CO) Polynomial

$$\sum_{i=1}^{4} C_i\,X(CO)^{4-i} = 0 \tag{11}$$

$$C_1 = K_{P1}\sqrt{K_{P2}}\left(\frac{K_{P1}}{\sqrt{K_{P2}}} - 1\right) - P$$

$$C_2 = K_{P1}\sqrt{K_{P2}}\left\{\frac{2K_{P1}}{\sqrt{K_{P2}}}\,(1 - XC) + XC - 1 - XO\right\} - 2PXO$$

$$C_3 = K_{P1}\sqrt{K_{P2}}\ XC\left\{XO + 1 + \frac{K_{P1}}{\sqrt{K_{P2}}}\,(XC - 4)\right\}$$

$$C_4 = 2(XC)^2 K_{P1}^2 \quad .$$

3. Zone 2

a. Major Species

Six major species are considered in Zone 2:

$X(N_2)$, X(N), X(A), X(O), X(C), and X(CO).

b. Major Specie Reactions

$$N_2 \rightarrow 2N$$

$$CO \rightarrow C + O$$

c. Major Species Conservation Equations

$$X(N_2) = XN - (1/2)X(N) \tag{12}$$

$$X(CO) = XC - X(C) \tag{13}$$

$$X(O) = 2XO + XC + X(C) \tag{14}$$

$$X(A) = XA \tag{15}$$

d. Equilibrium Constants for Major Species Reactions

$$K_{P3} = \frac{[X(N)]^2 \, P}{X(N_2) \, Z} \tag{16}$$

$$K_{P4} = \frac{[X(C)] \, [X(O)] \, P}{X(CO) \, Z} \tag{17}$$

$$Z = 1 + XO + XC + \frac{X(N)}{2} + X(C) \tag{18}$$

e. Minor Species

A large number of minor concentrations are considered in Zone 2 because of their importance in the radiative heating calculations. Eight minor species are considered:

X(CN), X(NO), $X(N^+)$, $X(C^+)$, $X(O^+)$, $X(A^+)$, $X(N_2^+)$, and $X(e^-)$.

f. Minor Species Reactions

$N \rightarrow N^+ + e^-$

$O \rightarrow O^+ + e^-$

$C \rightarrow C^+ + e^-$

$A \rightarrow A^+ + e^-$

$N_2^+ \rightarrow N^+ + N$

$C + N \rightarrow CN$

$N + O \rightarrow NO$.

g. Minor Species Concentrations

$$X(O^+) = K_{P7} \frac{Z}{P} \frac{X(O)}{X(e^-)} \tag{19}$$

$$X(N^+) = K_{P8} \frac{Z}{P} \frac{X(N)}{X(e^-)} \tag{20}$$

$$X(C^+) = K_{P9} \frac{Z}{P} \frac{X(C)}{X(e^-)} \tag{21}$$

$$X(N_2^+) = \frac{K_{P8}}{K_{P13}} \frac{[X(N)]^2}{X(e^-)} \tag{22}$$

$$X(CN) = X(C)X(N)K_{P5} \frac{P}{Z} \tag{23}$$

$$X(NO) = X(N)X(O)K_{P6} \frac{P}{Z} \tag{24}$$

$$[X(e^-)]^2 = \frac{Z}{P} \left[X(O)K_{P7} + X(N)K_{P8} + X(C)K_{P9} + X(A)K_{P14} + \frac{K_{P8}}{K_{P13}} [X(N)]^2 \right] \tag{25}$$

h. General Solution

X(N) Polynomial (26)

$$\sum_{i=1}^{5} C_i \, X(N)^{5-i} = 0$$

$$C_1 = -\left(K_{P4}\right)\left(4P + K_{P3}\right) - 2P\left[2P - K_{P3}\right] - \frac{K_{P3}^2}{8}$$

$$C_2 = \frac{(K_{P3})(K_{P4}}{2}\left[XN - (1 + XC + XO + XC)\right] + \frac{K_{P3}}{8}\left[4P(2XN - 2 - XC)\right]$$

$$-\frac{K_{P3}^2}{8}(2 - 2XN + XC)$$

$$C_3 = (K_{P3})(K_{P4})\frac{XN}{2}(1 + XO + 2XC) + \frac{P}{2}(K_{P3})\,XN\,(2 + XC)$$

$$-\frac{K_{P3}^2}{8}\left[XN^2 - 2XN\,(2 + XC) + (1 + XC - XOXC - XO^2)\right]$$

$$C_4 = -\frac{K_{P3}^2}{8}\left[XN^2\,(2 + XC) - 2XN\,(1 + XC - XOXC - XO^2)\right]$$

$$C_5 = -\frac{K_{P3}^2}{8}\,XN^2\,(1 + XC - XOXC - XO^2)$$

X (CN) Polynomial

$$\sum_{i=1}^{4} C_i \left[X(CN)\right]^{4-i} \qquad (27)$$

$$C_4 = -\left[X(C)\right]^2 K_{P5}^2\, X(N)\, P\left[X(C) + XC + 2XO\right] K_{P6}$$

$$C_3 = (K_{P5})\,X(C)\left[X(C)\,K_{P5}\,H + D + 2WSG\right]$$

$$H = PK_{P6}\left[X(C) + XC + 2XO\right]$$

$$D = P\,(K_{P6}^2)\,[X(C) + XC + 2XO]\;\;[X(C) + XC + 2XO + X(N)]$$
$$+\;[1 + XC + XO + X(C) + \frac{1}{2}X(N)]\;\;[X(C) + XC + 2XO)\,K_{P6}\,]$$

$$WSG = -(K_{P6} - K_{P5})\,X(N)\,P\,K_{P6}\,[X(C) + XC + 2XO]$$

$$C_2 = X(C)\,K_{P5}\,(F + 2WSH) + F(WS2) + (K_{P6} - K_{P5})\,(D + WSG)$$

$$F = -K_{P6}\,[X(C) + XC + 2XO\,] - K_{P6}^2\,P\,[X(C) + XC + 2XO\,]$$

$$WSH = (K_{P6} - K_{P5})\,P\,K_{P6}\,[X(C) + XC + 2XO]$$

$$WS2 = K_{P6}\,[X(C) + XC + 2XO]$$

$$C_1 = (K_{P6} - K_{P5})\,(F + WSH)$$

4. Zone 3

a. Major Species

Seven major species are considered in zone 3:

X(N), X(C), X(O), and X(e-).

b. Major Species Reactions

$$N \rightarrow N^+ + e^-$$

$$C \rightarrow C^+ + e^-$$

$$O \rightarrow O^+ + e^-$$

c. Major Specie Conservation Equations

$$X(N) = 2XN - X(N^+) \tag{28}$$

$$X(C) = XC - X(C^+) \tag{29}$$

$$X(O) = 2XO + 2XC - X(O^+) \tag{30}$$

$$X(e^-) = X(N^+) + X(C^+) + X(O^+) \tag{31}$$

d. Equilibrium Constants for Major Species Reactions

$$K_{P7} = \frac{X(O^+)\, X(e^-)\, P}{X(O)\, Z} \tag{32}$$

$$K_{P8} = \frac{X(N^+)\, X(e^-)\, P}{X(N)\, Z} \tag{33}$$

$$K_{P9} = \frac{X(C^+)\, X(e^-)\, P}{X(C)\, Z} \tag{34}$$

Total moles

$$Z = 1 + XN + XO + 2XC + X(e^-) \tag{35}$$

e. Minor Species

A number of minor concentrations heavily influence the radiative heating and the following additional specie concentrations are required.

$X(CN)$, $X(NO)$, $X(N_2^+)$

f. Minor Species Reactions

$$C + N \rightarrow CN$$

$$N + O \rightarrow NO$$

$$N^+ + N \rightarrow N_2^+$$

g. Minor Species Concentration

$$X(CN) = X(C)\, X(N)\, K_{P5}\, \frac{P}{Z} \tag{36}$$

$$X(NO) = X(N)\, X(O)\, K_{P6}\, \frac{P}{Z} \tag{37}$$

$$X(N_2^+) = \frac{X(N^+)\,X(N)}{K_{p13}} \frac{P}{Z} \tag{38}$$

h. General Solution

$X(C^+)$ polynomial

$$\sum_{i=1}^{5} C_i [X(C^+)]^{5-i} = 0 \tag{39}$$

$$C_1 = (K_{p8} - K_{p9})(K_{p7} - K_{p9})(K_{p9} + P)$$

$$C_2 = (K_{p9} + P)\{2XN K_{p8}(K_{p7} - K_{p9}) + 2(XC + XO) K_{p7}(K_{p8} - K_{p9}) + XC K_{p9}(K_{p8} + K_{p7} - 2K_{p9})\} + \{(K_{p8} - K_{p9})(K_{p7} - K_{p9}) \cdot [(1 + 2XC + XO + XN) K_{p9} - XC K_{p9}]\}$$

$$C_3 = XC K_{p9}\{(K_{p9} + P)[2XN K_{p8} + 2K_{p7}(XC + XO) + K_{p9} XC] + (K_{p8} + K_{p7} - 2K_{p9})[(1 + 2XC + XO + XN) K_{p9} - XC K_{p9}] - [2XN K_{p8}(K_{p7} - K_{p9}) + 2(XC + XO)(K_{p7})(K_{p8} - K_{p9})] - (1 + 2XC + XO + XN)(K_{p8} - K_{p9})(K_{p7} - K_{p9})\}$$

$$C_4 = XC^2 K_{p9}^2\{(1 + 2XC + XO + XN) K_{p9} - XC K_{p9} - 2(XC + XO) K_{p7} - 2XN K_{p8} - (1 + 2XC + XO + XN)(K_{p8} + K_{p7} - 2K_{p9})\}$$

$$C_5 = -K_{p9}^3 XC^3 (1 + 2XC + XO + XN)$$

5. Zone 4

Seven major species are considered in Zone 4:

$X(N^+)$, $X(C^+)$, $X(O^+)$, $X(N^{++})$, $X(C^{++})$, $X(O^{++})$, and $X(e^-)$.

a. Major Species Reaction

$$N^{+} \rightarrow N^{++} + e^{-}$$

$$C^{+} \rightarrow C^{++} + e^{-}$$

$$O^{+} \rightarrow O^{++} + e^{-}$$

b. Major Species Conservation Equations

$$X(N^{+}) = 2XN - X(N^{++}) \tag{40}$$

$$X(C^{+}) = XC - X(C^{++}) \tag{41}$$

$$X(O^{+}) = 2XO + 2XC - X(O^{++}) \tag{42}$$

$$X(e^{-}) = 1 + XN + XO + 2XC + X(C^{++}) + X(O^{++}) + X(N^{++}) \tag{43}$$

c. Equilibrium Constants for Major Species

$$K_{P10} = \frac{X(C^{++})\,X(e^{-})\,P}{X(C^{+})\,Z} \tag{44}$$

$$K_{P11} = \frac{X(N^{++})\,X(e^{-})\,P}{X(N^{+})\,Z} \tag{45}$$

$$K_{P12} = \frac{X(O^{++})\,X(e^{-})\,P}{X(O^{+})\,Z} \tag{46}$$

Total moles:

$$Z = 1 + XN + 2XC + XO + X(e^{-}) \tag{47}$$

d. General Solution

$X(O^{++})$ polynomial

$$\sum_{i=1}^{5} C_i [X(O^{++})]^{5-i} = 0 \qquad (48)$$

$$C_1 = (K_{P12} + P)(K_{P10} - K_{P12})(K_{P11} - K_{P12})$$

$$C_2 = (K_{P12} + P)\{ K_{P12}{}^2 (XC + X\phi) [K_{P10} + K_{P11} - 2K_{P12}]$$
$$+ XC\, K_{P10} (K_{P11} - K_{P12}) + 2XN\, K_{P11} (K_{P10} - K_{P12})\}$$
$$+ (K_{P10} - K_{P12})(K_{P11} - K_{P12})\{ 1 + 5XC + 3(XO + XN) K_{P12}$$
$$+ [2(XN + XO) + 3XC] P - K_{P12}{}^2 (XC + XO)\}$$

$$C_3 = K_{P12}{}^2 (XC + XO) \{\{(K_{P12} + P)[K_{P12}{}^2 (XC + XO) + XC K_{P10} + 2XN K_{P11}]$$
$$+ (K_{P10} K_{P11} - 2K_{P12})\{[1 + 5XC + 3(XO + XN)] K_{P12}$$
$$+ [2(XN + XO) + 3XC] P - 2K_{P12} (XC + XO)\}$$
$$- [1 + 5XC + 3(XO + XN)] (K_{P10} - K_{P12})(K_{P11} - K_{P12})$$
$$- [XC\, K_{P10} (K_{P11} - K_{P12}) + 2XN\, K_{P11} (K_{P10} - K_{P12})]\}\}$$

$$C_4 = [2K_{P12} (XC + XO)]^2 \{[1 + 5XC + 3(XO + XN)] K_{P12}$$
$$+ [2(XN + XO) + 3XC] P - K_{P12}{}^2 (XC + XO)$$
$$- XC K_{P10} - 2XN K_{P11} - [1 + 5XC + 3(XO + XN)] \cdot$$
$$[K_{P10} + K_{P11} - 2K_{P12}]\}$$

$$C_5 = -[1 + 5XC + 3(XO + XN)] [K_{P12}{}^2 (XC + XO)]^3$$

6. Equations Defining the Radiation Heating

a. Basic Equations

$$QR = \bar{\epsilon} \sigma T^4 \qquad (49)$$

RE-ORDER No. 66-417

where,

σ = Stefan-Boltzmann constant

$$\bar{\epsilon} = 1 - 2E_3(\Sigma r_i) \tag{50}$$

$$r_i = 15.24 \frac{\epsilon_i}{L} \text{ (DELTA)} \tag{51}$$

$$E_3(r) = \int_0^1 s e^{-r/s} ds . \tag{52}$$

The tabular values of $\bar{\epsilon}(r)$ given in Table I are used in the computer program.

b. Emissivities

The emissivities are taken to have the form:

$$\frac{\epsilon_i}{L} = C_i \frac{N_i}{5.4 \times 10^{19}} \frac{e^{-T_i/T}}{(T \times 10^{-4})^{n_i}} \tag{53}$$

where,

$$N_i = 2.7 \frac{\frac{(RHO)(M)}{2116}}{(89516)(273.16)} 10^{19} X_i . \tag{54}$$

The values of C_i, T_i, and n_i for the corresponding species X_i are given in Reference 1, Table I-20.

$$P = \frac{\rho_a V^2}{2116} \tag{55}$$

$$\frac{HM}{RT_o} = \frac{V^2 M}{2RT_o} + \left(\frac{MC_p}{R}\right) \frac{T_a}{T_o} \tag{56}$$

$$\frac{MC_p}{R} = 3.5\ XN + 3.5\ XO + 4.0\ XC + 2.5\ XA \tag{57}$$

310

308

IV. IBM ROUTINES

A. PROGRAM FLOW

A diagram depicting the flow of information within the program is shown in Figure 6.

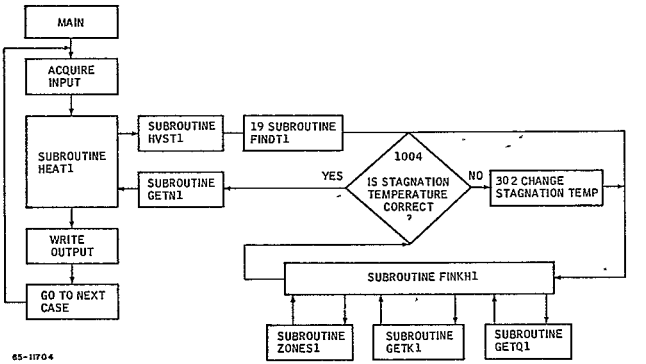

Figure 6 FLOW DIAGRAM FOR PROGRAM 1883

B. MAIN PROGRAM

The purpose of the main program is to define tables used with output from the calculation, to acquire program input and provide output. The main program defines tables of Hollerith words (ZNAM1 and ZNAM2) which appear in the output of Program 1883. ZNAM1 contains the array of specie names in the same order as their concentrations are stored in the array X, and the table ZNAM2 contains the names of the radiation heating sources as they are arrayed in the table QI. The arrays ZNAM1 and ZNAM2 should be referred to for any changes on the computation of an individual specie or radiation component.

There are eleven tables of temperature and enthalpy which, with a pressure table, are used to define the zone[1] in which a solution is computed. The selection of the proper set of tables from the 11 possibilities is determined by the value of the quantity NX. Each of the 11 tables is based on a specific composition of O_2, N_2, A, and CO_2 in the undissociated mixture, and the main program selects NX by choosing the table whose sum of mole fractions of O_2

and CO_2 is closest to the input sum XO and XC. The array TBSUM contains the sum $O_2 + CO_2$ for each of the 11 tables.

All input variables are read in through the namelist array INPUT.

Subroutine HEAT1, called after Statement 2001, begins all of the significant calculations done by the program. When control is passed back to the main program, the only remaining task is to provide the program output, all of which is contained in the calling sequence of HEAT1, save for the effective emissivities written out by Subroutine GETN1.

C. SUBROUTINES

1. HEAT 1

a. Purpose

HEAT1 defines the heats of formation of each specie in the equilibrium mixture, provides data for the computation of the detachment distance if this quantity is not specified as input and defines the zone on which the equilibrium solution will be found. Moreover, it controls the temperature iteration which computes an equilibrium mixture of some known pressure and enthalpy at the stagnation point, and obtains total radiation heating and individual radiation components.

b. Method

The major function of subroutine HEAT1 is to control the iteration in T_s, this stagnation temperature being such that the equilibrium mixture has pressure (P) and an enthalpy (HRT) whose relative error to the known stagnation enthalpy (HRTZ) is less than some number (PCNT).

HEAT1 first defines PCNT, then the heats of formation of each specie (the array E) and the quantities necessary for the detachment distance DELTA. DELTA is computed by a two-dimensional table lookup, unless it is specified in the program input as some number > 0. The lookup has, as independent variables, the inverse density ratio which appears in the output (RHØS/RHØ), and the geometry parameter b/a (see Reference 1). The corresponding tables are called RKTBL and BATBL. The two-dimensional dependent variable table of detachment distance is called DELTBL.

HEAT1 then calls subroutine HVST1 which provides a set of tables -- T1TBL, T2TBL, T3TBL, H1TBL, H2TBL, and H3TBL. This set is selected from 11 possible sets, and depends on the value of NX and thus on the 0_2 and CO_2 concentrations of the ambient mixture. These temperature and enthalpy tables are used with a pressure table (PTBL) to define the upper boundaries of the zone, in which a solution will be found, T1TBL being Zone 1, T2TBL being Zone 2, and so forth

After calling HVST1, subroutine HEAT1 defines the pressure (P) and enthalpy (HRTZ) at the stagnation point. If the pressure is lower (higher) than the lowest (highest) value in the array PTBL, it is set equal to the lowest (highest) value (Statements 11 to 14).

Subroutine FINDT1 provides a first guess for temperature, the number of the zone for the solution (NUM), and upper and lower bounds in temperature and enthalpy from the proper zone tables (T1TBL), and so forth Statements 1007 to 1009 test to be certain that no argon will be calculated in Zones 3 or 4, where argon species are not computed. If argon is present in Zones 3 or 4, no solution is provided (GO TO 999). Between Statements 1010 and 106 successive values of the temperature are computed by redefining the bounds in temperature and enthalpy (TUP, TLØW, HUP, and HLØW) and interpolating linearly to the value T which, with P, would give (for a linear variation) an enthalpy HRT=HRTZ. For each iteration subroutine FINDH1 is called; this routine solves the equation of state of the equilibrium mixture at the pressure P and approximate temperature T. In addition to specie concentration, the enthalpy HRT is computed and compared to HRTZ. If it is close enough, the iterative procedure is terminated (Statement 106); if not, TUP and HUP or TLØW and HLØW are recalculated, and a new temperature is interpolated. If no adequate solution is found within 30 iterations, this fact is noted in the output and the last value of temperature is used to provide the solution. Experience indicates that a failure to converge occurs close to the boundary of a zone, and generally where the total radiation heating is small.

Statement 106 deletes the computation of the radiation for velocities lower than 8000 ft/sec. Statements 116 and 107 define the "trace" specie N in Zone 4. If a positive detachment distance has not been provided as program input, Statements 503 to not including, 504 compute the density ratio ρ_a/ρ_s , and a/b and compute the detachment distance from a two-dimensional table lookup performed by AR2 TLU (see description of AR2TLU).

If the species O^+, N^+, C^+, and E^- are present in Zone 2, in which zone they are treated as trace species, their concentrations are entered in the regular array X of specie concentrations from the trace specie table DUM (Statements 504 to 502).

The normalized stagnation density is computed, and this with the list of concentrations, temperature, and detachment distance is used to compute effective emissivities, radiation components, and total radiation in Subroutine GETN1.

2. HVST-1

a. Purpose

Subroutine HVST1 provides subroutine HEAT1 with a set of six tables--T1TBL, T2TBL, T3TBL, H1TBL, H2TBL, and H3TBL--which are used to determine zone boundaries and to obtain a first guess for the stagnation temperature.

b. Method

The quantity NX, computed by the main program as the index of that set of tables which most closely approximates the concentrations of O_2 and CO_2, is used in a computed "go to" statement at the beginning of HVST1 to select the appropriate set of T1TBL, T2TBL, T3TBL, H1TBL, H2TBL, and H3TBL.

These tables are the same as in Reference 1 (pp. 59 to 69), except that for the first nine sets of tables each value in the enthalpy tables is modified from Reference 1 by the subtraction of a constant times the concentration of argon. The indices 1 through 7 correspond to values of PTBL in HEAT1 with indices 1 through 7.

3. FINDT1

a. Purpose

Subroutine FINDT1 provides a first guess for the stagnation temperature iteration, upper and lower bounds for the stagnation temperature and enthalpy, and the number of the zone in which the solution will be found.

b. Method

The quantities H1 and T1 are first found by table lookups using the pressure P and the independent variable table PTBL. If the H1 is within a specified percent of HRTZ, then the zone number is 1 and the first guess T is T1. If the H1 is < HRTZ, but not sufficiently close, the

zone number is 1, enthalpy bounds are H1 and 0, temperature bounds are T1 and 0, and the transfer to Statement 100 provides a first guess T by linear interpolation. If H1>HRTZ, but not sufficiently close, then the next higher zone is considered and an H2 and T2 obtained by table lookup from P and the array PTBL. Then H2 is compared to HRTZ as was H1, and the process is carried on until the zone containing HRTZ, the first guess temperature, is obtained from the interpolation at Statement 100.

4. FINDH1

a. Purpose

Subroutine FINDH1 provides the HRT for each of the temperature iterations controlled by subroutine HEAT1. In doing so, the equation of state for the equilibrium mixture must be computed at the pressure and approximate temperature T. Hence, the concentrations of each specie and total values of mixture are also computed.

b. Method

Subroutine FINDH1 first obtains the logs of pertinent partition functions (QP) and their partial derivatives (QPAR) from subroutine GETQ1. Which partition functions are computed depends upon the species in which zone the solution lies. The symbol QP is really the log of the partition function times pressure, and hence the - ln P term in the equations of Reference 1, page 54 is not included in the computations of subroutine GETQ1. With these partition functions, the relevant equilibrium constants for the zone are computed by subroutine GETK1, and are stored in the array PK.

The arrays of specie concentrations are then cleared to zero (X and DUM) and subroutine ZONES1 called. If a solution is found in ZONES1, the X array will contain some nonzero elements. The do-loop ending at Statement 104 uses the heats of formation, molar concentration, and partial derivative of the partition function of each of the first 16 species to compute the dissociation enthalpy and total enthalpy (SUMD and SUMH, respectively). If species A and A+ exist (XC18, XC19), their contributions to the enthalpy are included (the partial derivatives of their partitions having first been computed), since these have not been previously computed in GETQ1 (Statements 107 to 110). N_2+ does not contribute in this model to the enthalpy; hence, its heat of formation is not stored in the array E, and for this reason the 17th heat of formation is for the 18th specie (A), and the 18th heat of formation is for the 19th specie (A+). Having computed the HRT and HDHS, the subroutine returns control to subroutine HEAT1.

5. GETQ1

a. Purpose

Subroutine GETQ1 provides the log of the partition functions times pressure and their partial derivatives with respect to temperature for those species which are included in the relevent zone.

b. Method

The evaluation of the logs of the partition functions times pressure (QP) and their partial derivatives (QPAR) are merely algebraic evaluations of the equations of Reference 1, page 54. Since the equations of reference are ln Q, but our evaluation is for ln QP, the -ln P term of the reference is not included in the GETQ1 calculations.

If the solution lies in Zone 1, the functions evaluated are for N_2, CO_2, CO, O_2, and O (QP and QPAR 1 to 5, respectively). For Zone 2, the functions are evaluated only for N_2, CO, O, N, CN, NO, and C (QP and QPAR 1, 3, 5, 6, 7, 8, and 9, respectively). For Zone 3, the functions are evaluated for O, N, C, O^+, N^+, C^+, and e^- (QP and QPAR 5, 6, 9, 10, 11, 12, and 13 respectively). For Zone 4, the functions are evaluated for N, O^+, N^+, C^+, e^-, N^{++}, O^{++}, and C^{++} (QP and QPAR 6, 10, 11, 12, 13, 14, 15, and 16, respectively).

6. GETK1

a. Purpose

Subroutine GETK1 evaluates appropriate equilibrium constants given ln PQ for the relevant species.

b. Method

The equations for the equilibrium constants are given in Reference 1, page 48. In Zone 1, the constants computed are for the reactions $CO_2 \rightarrow CO + 1/2\ O2$ and $O2 \rightarrow 2O$ (PK 1 and 2, respectively). For Zone 2, the reactions are $N_2 \rightarrow 2N$, $CO \rightarrow C+O$, $C+N \rightarrow CN$, and $N+O \rightarrow NO$ (PK 3, 4, 5, and 6, respectively). In Zone 3, the reactions are $O \rightarrow O^+ + e^-$, and $C \rightarrow C^+ + e$ (PK 7, 8, and 9 respectively). In Zone 4, the reactions are $N \rightarrow N^+ + e^-$, $C^+ \rightarrow C^{++} + e^-$, $N^+ \rightarrow N^{++} + e^-$, and $O^+ \rightarrow O^{++} + e^-$ (PK 8, 10, 11, and 12, respectively).

7. ZØNES1

a. Purpose

Subroutine ZØNES1 computes the concentrations of each specie of the equilibrium mixture at the given pressure and temperature of the iteration controlled by subroutine HEAT1.

b. Method

Given temperature, pressure, mole fractions of O_2, N_2, CO_2, and A in the undissociated atmosphere, along with the zone number and pertinent equilibrium constants, subroutine ZØNES1 will compute the moles of each specie in the equilibrium mixture at the stagnation point, and the total moles of gas.

The method of solution depends on finding the roots of a polynominal whose argument is equal (or proportional) to one of the important species in the equilibrium mixture. The root which is used may be determined by physical constraints (e. g. it must be real and positive). If no such root is found, "NO VALID SØLU" is printed and the case deleted. Which specie is solved for depends upon the zone in which the solution is found. The coefficients of the polynominal are functions of the mole fractions of N_2, O_2, CO_2, and A in the atmosphere, and the equilibrium constants of the reactions assumed to be important in the zone. The important reactions thus considered for equilibrium constants are those (and only those) computed by the subroutine GETK1. Where trace species are considered (Zones2 and 3), their concentrations are purely ancillary to the principal reactions considered, and the partition functions and equilibrium constants pertinent to these trace species are computed in subroutine ZØNES1, not in subroutines GETQ1 and GETK1.

In Zone 1, no trace species are present and the species considered from principal reactions are N_2, CO_2, CO, O_2, and O the reactions being $CO_2 \rightarrow CO + 1/2\, O_2$, and $O_2 \rightarrow 2O$. In Zone 2, the species considered from principal reactions are N_2, CO, O, N, CN, NO, and C, the reactions being $N_2 \rightarrow 2N$, $CO \rightarrow C+O$, $C+N \rightarrow CN$, and $N+O \rightarrow NO$. Trace species considered are O^+, N^+, C^+, e^-, and A^+, which come from reactions $O \rightarrow O^+ + e^-$, $N \rightarrow N^+ + e^-$, $C \rightarrow C^+ + e^-$, $N_2^+ \rightarrow N^+ + N$, and $A \rightarrow A^+ + e^-$. The equilibrium constants and necessary partition functions for these last five reactions are computed at the beginning of the subroutine before Statement 100 (DLPQ5, DLPQ6, DLPQ9, DLPQ10, and DLPQ11 are the logs of the partition functions times pressure for O, N, C, N^+, and N_2^+; DGK13 is the equilibrium constant for the reaction $N_2^+ \rightarrow N^+ + N$), and in the Zone 2 calculations between Statements 55 and 8512 (DLPQ12, DLPQ13, DLPQ14, DLPQ15, DLPQ16 are the logs of the partition function times pressure O^+, e^-, C^+, A, and A^+; DGK7, DGK8, DGK9, DGK14 are equilibrium constants for the reactions $O \rightarrow O^+ + e^-$, $N \rightarrow N^+ + e^-$, $C \rightarrow C^+ + e^-$, and $A \rightarrow A^+ + e^-$). In Zone 3, the species considered from principal reactions are O, N, C,

O^+, N^+, C^+, and e^-, the reactions being $O \rightarrow O^+ + e^-$, $N \rightarrow N^+ + e^-$, and $C \rightarrow C^+ + e^-$. Trace species are CN, NO, and N^+ which come from the reactions $C+N \rightarrow CN$, $N+O \rightarrow NO$, $N_2^+ \rightarrow N^+ + N$. The equilibrium constants and logs of the necessary partition functions times pressure are computed at the beginning of the subroutine before Statement 100 (DGK13 is the equilibrium constant for the reaction $N_2^+ \rightarrow N^+ + N$, DLPQ5, DLPQ6, DLPQ9, DLPQ10, and DLPQ11 are the logs of the partition function times pressure for O, N, C, N^+, and N_2^+). In the Zone 3 calculation between Statements 28 and 8112, (DLPQ7 and DLPQ8 are the logs of the partition function times pressure for the species CN and NO. DGK5 and DGK6 are equilibrium constants for the reactions $C+N \rightarrow CN$ and $N+O \rightarrow NO$.

In Zone 4 no trace species are present and the species considered from principal reactions are O^+, N^+, C^+, e^-, N^{++}, O^{++}, and C^{++} from the reactions $N \rightarrow N^+ + e^-$, $C^+ \rightarrow C^{++} + e^-$, $N^+ \rightarrow N^{++} + e^-$, and $O^+ \rightarrow O^{++} + e^-$.

8. GETN1

a. Purpose

Subroutine GETN1 computes the effective emissivities of each component of the total radiation heating and from them computes the total radiation heating and the radiation component of each contributor.

b. Method

Subroutine GETN1 first defines the tables TAUTBL and EPSTBL, a tabulation of $1-2E_3(\tau)$ (EPSTBL) as a function of the independent variable τ (TAUTBL). Next the table of emissivities EL is cleared to zero, and then the concentration of each specie in the equilibrium mixture is converted to particles per cm^3 (ZNI). The DO LOOP ending on Statement 199 then computes the emissivities of each component to the total radiation which may come from a positive concentration of any of the first 12 species contained in the array X. These emissivities (EL_i, i = 1 to 21 correspond to the radiation contributors in the same order as the Hollerith names in the table ZNAM2 of the main program. No radiation contribution is made from the species X(13-16) (e^-, N^{++}, O^{++}, C^{++}), but contributions are made by X (17-19), and the emissivities for these species are computed from Statement 213 to 218. The emissivity formula and constants used to obtain the average emissivity of the gas (EP BAR) may be found in Reference 1, page 102. The total radiation and contribution of each component is then computed based on the $\bar{\epsilon}$ and ϵ_1 (DO LOOP ending on 301). Output is provided, which includes the $\bar{\epsilon}$, ϵ_1, and Δ.

CALLING SEQUENCE

HEAT1	Variable Name Input Or Output of subroutine Source	V, Velocity Input Program Input	RHØ, density Input Program Input	XN, N_2 mole fraction Input Program Input	XO, O_2 mole fraction Input Program Input	XC, CO_2 mole fraction Input Program Input
XA, A mole fraction Input Program Input	NX, enthalpy table no. Input Main Program	P, pressure Output HEAT1	THN, Θ_N nose angle Input Program Input	RN, R_N, nose radius Input Program Input	RS, R_S, shoulder radius Input Program Input	RC, R_C, cone radius Input Program Input
T, temperature Output HEAT1	Z, moles of mixture Output ZØNES1	RHØST, ρ_s / ρ_a density ratio Output HEAT1	QSUM, Q_R radiation heating Output GETN1	QI, radiation by specie Output GETN1	X, specie concentration Output ZØNES1	HDHS, dissociation energy + enthalpy Output FINDH1
HRT, HM/RTo, total enthalpy Output FINDH1	DEL, detachment distance Input Program Input	DUM, concentration of O^+, N^+, C^+, e^- Output ZØNES1	TINF, ambient temperature Input Program Input			

HVST1	Variable Input Or Output of subroutine Source	NX, atmos. table number Input Main	T1TBL Zone 1 temp table Output HVST1	T2TBL Zone 2 temp. table Output HVST1	T3TBL Zone 3 temp. table Output HVST1	H1TBL Zone 1 enthalpy table Output HVST1
H2TBL Zone 2 enthalpy table Output HVST1	H3TBL Zone 3 enthalpy table Output HVST1	XA, mole fraction of A Input Program Input				

FINDT1	Variable Input or Output for subroutine Source	P, pressure Input HEAT1	HRTZ, stagnation enthalpy Input HEAT1	PTBL, pressure table (used with T&H tables) Input HEAT1
T1TBL-Zone 1 temp table (used with PTBL & H1TBL) Input HVST1	T2TBL-Zone 2 temp table (used with PTBL & H2TBL) Input HVST1	T3TBL-Zone 3 temp. table (used with PTBL & H3TBL) Input HVST1	H1TBL, Zone 1 enthalpy table (used with PTBL & T1TBL) Input HVST1	H2TBL-Zone 2 enthalpy table (used with PTBL & T2TBL) Input HVST1
H3TBL Zone 3 enthalpy table (used with PTBL & T3TBL) Input HVST1	TUP-Highest temp. for 1st enthalpy iteration Output FINDT1	TLØW-Lowest temp. for 1st enthalpy iteration Output FINDT1	HUP-Highest enthalpy for 1st enthalpy iteration Output FINDT1	HLØW-Lowest enthalpy for 1st enthalpy iteration Output FINDT1
T-first guess for in enthalpy iteration Output FINDT1	NUM-Zone number for enthalpy iteration Output FINDT1	PCNT-percent error acceptable in enthalpy Input HEAT1		

FINDH1	Variable Input or Output for Subroutine Source	NUM, Zone Number Input HVST1	P, pressure Input HEAT1	T, temperature for current enthalpy iteration Input HEAT1
E, Heats of formation at 0°K Input HEAT1	PK, equilibrium constants Output GETK1	XO, mole fraction of O_2 in atmosphere Input Program Input	XC, mole fraction of CO_2 in atmosphere Input Program Input	XN, mole fraction of N_2 in atmosphere Input Program Input
XA, mole fraction of A in atmosphere Input Program Input	Z, total moles of equilibrium mixture Output ZØNES1	X, specie moles in equilibrium mixture Output ZØNES1	HRT, enthalpy at T and P (HRTZ for last iteration) Output FINDH1	HDHS, dissociation energy + enthalpy Output FINDH1
DUM-moles of O^+, N^+, C^+ and e^- in Zone 2 Output ZØNES1				

	Variable	NZZ, Zone number	TZ-temp. at current enthalpy iteration	ZLPQ, log of partition functions	QPAR-derivatives of QP at constant P
GETQ1	Input or Output for Subroutine	Input	Input	Output	Output
	Source	Main	HEAT1	GETQ1	GETQ1

	Variable	NZ, Zone number	TZ-temp at current enthalpy iteration	ZLPQ, log of partition functions	PK; Equilibrium constants
GETK1	Input or Output for Subroutine	Input	Input	Input	Output
	Source	Main	HEAT1	GETQ1	GETK1

	Variable	NUM, Zone number	ZT-temp at current enthalpy iteration	XØZ mole fraction of O_2 in atmosphere	XCZ mole fraction of CO_2 in atmosphere
ZØNES1	Input or Output for Subroutine	Input	Input	Input	Input
	Source	Main	HEAT1	Program Input	Program Input

XNZ mole fraction of N_2 in atmosphere	XAZ mole fraction of A in atmosphere	PZ, pressure	PK, equilibrium constants	ZZ-total moles of equilibrium-mixture	XX specie moles in equilibrium mixture
Input	Input	Input	Input	Output	Output
Program Input	Program Input	HEAT1	GETK1	ZØNES1	ZØNES1

DUM, moles of O^+, N^+, C^+, & e^- in Zone 2
Output
ZØNES1

	Variable	TZ-temp. at current enthalpy iteration	X, specie moles in equilibrium mixture	RHØS, normalized stagnation density	DEL, shock detachment distance
GETN 1	Input or Output for Subroutine	Input	Input	Input	Input
	Source	HEAT1	ZØNES1	HEAT1	Program Input or from correlation in HEAT1

QI, specie radiation	QSUM total radiation
Output	Output
GETN1	GETN1

D. SIGNIFICANT EQUATIONS

Main Program None

1. HEAT1

$M = ZM = 28\,XN + 32\,XO + 44\,XC + 40\,XA$ Molecular weight of cold gas

$C_p/R = CP\phi R = (3.5\,(XN + XO) + 4\,XC + 2.5\,XA)/ZM$ Specific heat of cold gas/R

$$H/RT_o = HRTZ = \frac{V^2}{\left(64.4 \cdot 778 \cdot \dfrac{1\,987 \cdot 453.5 \cdot 273.16}{252 \quad ZM}\right)} + ZM \cdot \left(\frac{CP\phi R}{273.16}\right) \cdot TINF$$ stagnation point enthalpy

$P = P = (RH\phi\, V^2)/2116.$ stagnation point pressure

The above are computed prior to the execution of the IF test before Statement 11.

If Δ is not specified as program input, the following quantities are computed (Statements 503 to 604)

$$b/a = BA = \left[\frac{RN}{RC}(1 - \cos(THN)) + \frac{RS}{RC}\cos(THN)\right] \Big/ \left[\frac{RN}{RC}\sin(THN) + \frac{RS}{RC}(1 - \sin(THN))\right]$$ Geometry parameter

$$\rho_s/\rho_a = V^2 \Big/ \left[Z \frac{89516}{ZM} \quad T\right]$$ Density ratio

$\Delta = DELA\,[RN \sin(THN) + RS\,(1 - \sin(THN))]$ Detachment distance

The radiation depends upon the normalized stagnation density

$$\rho = RH\phi S = \frac{P}{Z} \frac{273\,16}{T}$$

HVST1 - Trivial modifications of Reference 1, pp. 59-69.

2. FINDT1

Linear interpolations to find a first guess for the stagnation temperature, the zone number, and the ranges of enthalpy and temperature for the stagnation temperature iteration.

3. FINDH1

$$\frac{H_i M}{RT_o} = HI_{(i)} = E_{(i)} + \frac{T^2}{273.16} QPAR_{(i)} - \text{Enthalpy of } i^{th} \text{ specie (reference 1, p. 58)}$$

$$\frac{HM}{RT_o} \doteq SUMH = \sum_i X(i) \cdot HI(i) - \text{Enthalpy at P and approximate stag. temperature T}$$

$$H_D = SUMD = \sum_i X(i)\ E(i) - \text{Dissociation enthalpy}$$

4. GETQ1

This subroutine evaluates ln PQ (X_i) , pressure times the log of the partition and the partial derivative of the partition function with respect to temperature for some set of species dependent on the zone numbers.

The correspondence between $QPAR(1) = \left(\frac{\partial \ln Q_i}{\partial T}\right)_p$ and $ZLPQ(1) = \ln (PQ_i)$

is explained on the description of GETQ, the ZLPQ(i) are contained in the set of functions documented in Reference 1, p. 54, and the derivatives are obtainable by inspection.

5. GETK1

The subroutine evaluates equilibrium constants for the principal reactions assumed to exist in the appropriate zone. The equations are in Reference 1, p, 48.

6. ZØNES1

The partition functions, their derivatives, and equilibrium constants computed in ZØNES are explained in the subroutine description and documented in Reference 1 (p. 48 and 54).

The Zone 1 equations are solved between Statements 100 and 200. The specie concentrations are computed by finding on the appropriate root of a polynomial.

$$f(\Sigma_1) = \sum_{i=1}^{4} (C\emptyset ED(i) \Sigma_1^{(4-i)}$$

Real and imaginary roots are computed by the library subroutine POLROT (see subroutine description). The "appropriate" root must be real, positive, and such that no negative specie concentrations result. If no such root is found, the message "NØ VALID SØLN" is written in the output and the case deleted. The equationsfor the specie concentrations are as follows:

$$\Sigma_2 = \Sigma_1 \ XO + \frac{\Sigma_1}{2} \Big/ \left[2 \frac{PK_1}{\sqrt{PK_2}} (XC - \Sigma_1) + \Sigma_1 \right]$$

$$X(N_2) = X(1) = XN$$

$$X(CO_2) = X(2) = XC - \Sigma_1$$

$$X(CO) = X(3) = \Sigma_1$$

$$X(O_2) = X(4) = XO + \frac{\Sigma_1}{2} - \Sigma_2$$

$$X(O) = X(5) = 2\Sigma_2$$

$$Z = 1 + \frac{\Sigma_1}{2} + \Sigma_2$$

In Zone 2, the computations are done between Statements 200 and 300. First PØLRØT is used to find the roots of the polynomial

$$f(\Sigma_6) = \sum_{i=1}^{5} COED(i) \, \Sigma_6^{(5-i)}$$

Then the roots are computed for the polynomial

$$f(\Sigma_7) = \sum_{6=1}^{4} COED(i) \, \Sigma_7^{(4-i)}$$

As in Zone 1, the root used must be real, positive, and such that no negative concentrations are permitted. The principal species are as follows:

$$\Sigma_4 = (4 \ \Sigma_6^2 \ P/(PK_3 (XN - \Sigma_6)) - 1 - XC - XO - \Sigma_6$$

$$\Sigma_8 = \frac{\Sigma_7 (\Sigma_4 + XC + 2XO) PK_6}{(\Sigma_4 - \Sigma_7) PK_5 + \Sigma_7 PK_6}$$

$$X(N_2) = X(1) = XN - \Sigma_6$$

$$X(CO) = X(3) = XC - \Sigma_4$$

$$X(O) = X(5) = \Sigma_4 + 2 \ XO + XC - \Sigma_8$$

$$X(N) = X(6) = 2\Sigma_6 - \Sigma_8 - \Sigma_7$$

$$X(CN) = X(7) = \Sigma_7$$

$$V(NO) = V(8) = \Sigma_8$$

$$X(C) = X(9) = \Sigma_4 - \Sigma_7$$

$$Z = 1 + XC + XO + \Sigma_4 + \Sigma_6 - \Sigma_7 - \Sigma_8$$

For trace species,

$$X(e^-) = X(13) = DUM(2) = \left\{ \frac{Z}{P} \left(X(O) \quad PK_7 + X(N) \cdot PK_8 + X(C) - PK_{14} \right) + \frac{X(N)^2 KP_8}{KP_{13}} \right\}$$

$$X(N^+) = X(11) = DUM(1) = KP_8 \left\{ \frac{Z}{P} \frac{X(N)}{X(e^-)} \right\}$$

$$X(O^+) = X(10) = DUM(3) = K P_7 \left\{ \frac{Z}{P} \frac{X(O)}{X(e^-)} \right\}$$

$$X(C^+) = X(12) = DUM(4) = K P_9 \left\{ \frac{Z}{P} \frac{X(C)}{X(e^-)} \right\}$$

$$X(N_2^+) = X(17) = \frac{KP_8 X(N)^2}{KP_{13} X(e^-)}$$

$$X(A) = X(18) = XA$$

$$X(A^+) = X(19) = K P_{14} \left\{ \frac{Z}{P} \frac{XA}{X(e^-)} \right\}$$

In Zone 3, the calculations are done between Statements 300 and 400. POLROT is used to fine the roots of a polynomial

$$F(\Sigma_{11}) = \sum_{i=1}^{5} COED(i) \quad \Sigma_{11}^{(5-i)}$$

The root used must be real, positive, and such that there are no negative concentrations. The specie equations are as follows:

$$\Sigma_{10} = \frac{2\ \Sigma_{11}\,(XC + XO)\,PK_7}{[XC \cdot PK_9 + \Sigma_{11}\,(PK_7 - PK_9)]}$$

$$\Sigma_9 = \frac{2 \cdot \Sigma_{11} \cdot XN \cdot PK_8}{[XC \cdot PK_9 + \Sigma_{11}\,(PK_8 - PK_9)]}$$

$X(O) = X(5) = 2\,(XC + X\phi) - \Sigma_{10}$

$X(N) = X(6) = 2\,XN - \Sigma_9$

$X(C) = X(9) = XC - \Sigma_{11}$

$X(O) = X(10) = \Sigma_{10}$

$X(N^+) = X(11) = \Sigma_9$

$X(C^+) = X(12) = \Sigma_{11}$

$X(e^-) = X(13) = \Sigma_9 + \Sigma_{10} + \Sigma_{11}$

$Z = 1 + 2\ XC + XO + XN + \Sigma_9 + \Sigma_{11}$

For trace species,

$$X(CN) = X(7) = \frac{P \cdot PK_5}{Z}\ (2\,XN - \Sigma_9)\,(XC - \Sigma_{11})$$

$$X(NO) = X(8) = \frac{P \cdot PK_6}{Z}\ (2\,XN - \Sigma_9)\,(2\,XO + 2\,XC - \Sigma_{10})$$

$$X(N_2^+) = X(17) = \frac{\Sigma_9\,(2\,XN - \Sigma_9)\,P}{Z \cdot PK_{13}}$$

In Zone 4, the calculations are done between Statements 400 and 900. POLROT is used to find the roots of a polynomial

$$f(\Sigma_{12}) = \sum_{i=1}^{5} COED(i)\ \Sigma_{12}^{(E-i)}$$

RE-ORDER No. 66-417

The root used must be real, positive, and such that there are no negative concentrations. The equations for the concentrations are:

$$\Sigma_{13} = \frac{\Sigma_{12} \cdot XC \cdot PK_{10}}{[2 \cdot PK_{12}(XC + XO) + \Sigma_{12}(PK_{10} - PK_{12})]}$$

$$\Sigma_{14} = \frac{2 \cdot \Sigma_{12} \cdot XN \cdot PK_{11}}{[2 \cdot XO_{12}(XC + XO) + \Sigma_{12}(PK_{11} - PK_{12})]}$$

$$X(O^+) = X(10) = 2(XC + XO) - \Sigma_{12}$$

$$X(N^+) = X(11) = 2\,XN - \Sigma_{14}$$

$$X(C^+) = X(12) = XC - \Sigma_{13}$$

$$X(e^-) = X(13) = 2(XN + XO) + 3 \cdot XC + \Sigma_{12} + \Sigma_{13} + \Sigma_{14}$$

$$X(N^{++}) = X(14) = \Sigma_{14}$$

$$X(O^{++}) = X(15) = \Sigma_{12}$$

$$X(C^{++}) = X(16) = \Sigma_{13}$$

One trace specie is considered,

$$X(N) = X(6) = \frac{X(N^+) \cdot X(e^-) \cdot P}{Z \cdot PK_8}$$

This specie is unique in that it is computed in subroutine HEAT.

7. GETN1

$ZNI_i = X_i \cdot RHOS \cdot 2.69 \times 10^{19}$ $\quad i = 1, 19$ — Specie concentration to particles per cm^3

$$\frac{\epsilon_i}{L} = EL_i = C_i \left(\frac{ZNI_i}{5.4 \times 10^{19}}\right) \frac{1}{(T \times 10^{-4})^{n_i}} e^{-T_i/T} \quad i = 1, 21$$

Emissivities without self-absorption correction. C_i, n_i, and T_i from Reference 1, p 102

$r_i = TAUTP = 1/2\ \Delta \frac{\epsilon_i}{L}$ — Argument of $E_3(r_i)$ for effective emissivities

$\tau = \text{TSUM} = \sum_{i=1}^{21} \tau_i$	Argument of $E_3(\tau)$ for total effective emissivity.
$\epsilon_i = \text{EPS}(i) \quad i = 1, 21$	Value of $(1 - 2E_3(\tau_i))$, effective emissivities
$\epsilon = \text{EPBAR}$	Value of $(1 - 2E_3(\tau))$, total effective emissivisty
$q_i = \text{QI}(i) = \frac{0.174 \times 10^{-8} \quad (1.8 \times T)^4}{3600} \text{EPS}(i), i = 1, 21$	Component radiation heating
$Q = \text{QSUM} = \text{EPBAR} \frac{0.174 \times 10^{-8} (1.8 \times T)^4}{3600}$	Total radiation heating

V. REFERENCES

1. RAD, Mars-Venus Capsule Parameter Study, I, Introduction and Analysis JPL Contract 950626, Avco/RAD-TR-64-1 (21 March 1964).

2. Mayer, J. E., and M. G. Mayer, Statistical Mechanics, John Wiley and Sons, New York (1961).

3. Hansen, C. F., Approximations for the Thermodynamic and Transport Properties of High Temperature Air, NASA TR R-50 (1959).

4. Kivel, B., and K. Bailey, Tables of Radiation from High-Temperature Air, Avco-Everett Research Lab, Research Report 21 (October 1959).

5. Vinokur, M., Hypersonic Flow around Bodies of Revolution Whose Shock Waves are Generated by Conic Sections, LMSD-288139 General Research In Flight Sciences, I, Part I, Fluid Mechanics (January 1959 to 1960).

6. Wick, B. H., Radiative Heating of Vehicles Entering the Earths Atmosphere, NASA N6212453 (April 1962).

7. Toshikawa, K.K., and D. R. Chapman, Radiative Heat Transfer and Absorption Behind a Hypersonic Normal Shock Wave, NASA TN D-1424.

8. Wolf, F. and J. Speigel, Analysis of Equilibrium Shock-Layer Radiation for Atmospheric Entry to Mars, JPL Space Programs Summary No. 37-33, IV.

9. Williams, M. J. and C. E. Treanor, A Method for Calculating Diatomic Spectra Using a Digital Computer, CAL Report No. QM-1626-A-5, Cornell Aeronautical Laboratory, Inc., Buffalo, New York (May 1962).

PROGRAM 1884

330<

PROGRAM
1004

HEAT SHIELD PROGRAM (1884)

CONTENTS

I. Introduction 1

A. General Description 1
B. Calculation Model 2
C. Limitations 5

II. Usage 7

A. Input Definitions 7
B. Input Procedures 10
C. Output Definitions 11
D. Sample Problem 13

III. Computations 42

A. Block Diagram 42
B. Symbols 43
C. Equations 44

IV. IBM Routines 48

A. Program Flow 48
B. Main Program 49
C. Subroutines 50
D. Significant Equations 59

V. References 66

331<

ILLUSTRATIONS

Figure	1	Heat Shield Calculation Model	1
	2	Nonablating Heat Shield Calculation Model	3
	3	Ablating Heat Shield Calculation Model...	3
	4	Block Diagram for Program 1884	42
	5	Flow Diagram for Program 1884	48

I. INTRODUCTION

A. GENERAL DESCRIPTION

The purpose of this program is to determine the heat shield thickness and weight requirements to protect the heat shield substructure from exceeding a specified temperature limit at any time during the entry trajectory. The general inputs include:

1. Convective heat rates as a function of time in tabular form and an indication if, and when, turbulent flow occurs

2. Radiation heat rates as a function of time in tabular form

3. Supporting heat transfer data as the stagnation enthalpy variation with time, atmospheric composition, and heat pulse scaling factors

4. Heat shield material properties, including the density, conductivity, specific heat, emissivity, ablation temperature, heat of vaporization, and convective blocking factor

5. Design constraints as the maximum allowable substructure temperature, the total entry time during which the substructure must be protected, the substructure thermal capacitance, and bond thickness and thermal properties.

The calculation model simulates a one-dimensional, heat-conduction problem into a slab of finite thickness, subject to various thermal boundary conditions as depicted in Figure 1.

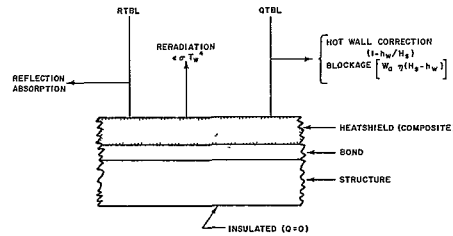

65-11912

Figure 1 HEAT SHIELD CALCULATION MODEL

The primary output is the heat shield unit area weight (lb/ft^2) required to satisfy the design constraints. If ablation occurs, the relative proportions of ablative and insulative weights are indicated also.

B. CALCULATION MODEL

The calculation model is described in detail in References 1 and 2; hence only a brief summary is given here. The approach utilized considers that aerodynamic heating data are available based on a cold wall consideration (i. e. the heating calculations are developed without a knowledge of the wall temperature history with time, and the assumption is made that $\frac{H_w}{H_s} << 1$). Hence, the convective heating inputs must be corrected for the hot wall reduction, $(1 - \frac{H_w}{H_s})$, as the wall temperature history is computed.

To arrive at a rapid method suitable for parametric studies, an approximate calculation model which permits a direct solution for the unit area heat shield weight is utilized. The approximate model replaces the actual heating history with an equivalent one having the same total integrated heating, but also having a constant surface temperature. The solution for the time wise variation of the temperature distribution in a finite slab with constant surface temperature, and hence the solution to the equivalent simulation model, is well known and the solution is given in Reference 3

As shown in Figure 1, the calculation model allows for the inclusion of a bond and substructure and a composite heat shield material and considers the effects of laminar or turbulent heating, radiative heating, reradiation, the hot wall reduction, and convective heating blockage due to ablation.

In order to apply the approximate method, a number of detailed assumptions regarding the nature of the heat pulse were made. Key features of the calculation model are summarized below.

1. Initial Time (TI)

The heating data input to the program is usually based on the flight time history during the entry flight. For the simulated calculation model, an effective initial time is defined such that the portion of the heat pulse up to the combined peak heating rate (i. e. add the convective and radiative pulse and determine the time for their peak) is triangular, and the integrated cold wall heating is identical with the actual data. The location of the initial time (TI) is shown in Figures 2 and 3 for nonablating and ablating cases, respectively.

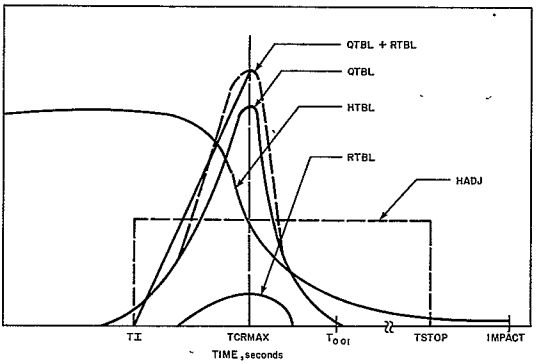

QTBL	COLD WALL CONVECTIVE HEATING
HTBL	DIMENSIONLESS STAGNATION ENTHALPY
RTBL	RADIATIVE HEATING
HADJ	AVERAGE STAGNATION ENTHALPY
TI	INITIAL TIME OF CONSTANT TEMPERATURE PROBLEM
$T_{0.01}$	TIME WHEN QTBL = 0.01 $QTBL_{MAX}$
TSTOP	TIME TO END OF THERMAL PROBLEM

65-11913

Figure 2 NONABLATING HEAT SHIELD CALCULATION MODEL

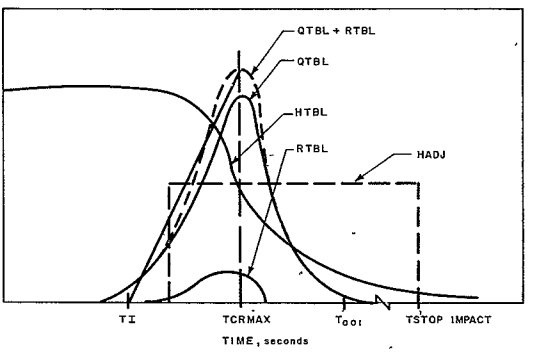

QTBL	COLD WALL CONVECTIVE HEATING
HTBL	DIMENSIONLESS STAGNATION ENTHALPY
RTBL	RADIATIVE HEATING
TI	INITIAL TIME OF CONSTANT TEMPERATURE PROBLEM
TADJ	START TIME OF INSULATION PROBLEM AFTER END OF ABLATION
HADJ	AVERAGE STAGNATION ENTHALPY
$T_{0.01}$	TIME WHEN QTBL = 0.01 $QTBL_{MAX}$
TSTOP	TIME AT END OF THERMAL PROBLEM

65-11914

Figure 3 ABLATING HEAT SHIELD CALCULATION MODEL

2. Final Time (Actual TSTØP)

The final time of the simulation model is dependent on a number of program test criteria. The input value of TSTØP reflects the trajectory flight time and also the post-flight time during which the substructure must be thermally protected by the heat shield. The input TSTØP is therefore a test criterion for the actual TSTØP. The linearization of the calculation model by utilizing an average stagnation enthalpy for the nonablating cases, and when obtaining the insulative requirements of the heat shield during the post-ablation period, depends on the actual TSTØP. Experience has shown[1] that the actual TSTØP should be limited to less than twice the length of the heat pulse (the length of the heat pulse being defined as the time from TSTART to the point where the convective heating is 1 percent of the maximum value). The above two criteria are compared and the smaller value used for the actual TSTØP.

In addition to the criteria above, program tests are performed in the case of nonablating slabs that reduce TSTØP if the slab equilibrates at a time smaller than the TSTØP, in which case the actual TSTØP is taken as the time to equilibrate (i.e. for this case, the slab temperature reaches a peak, which is equal to TREAR at the actual TSTØP).

3. Ablation Model

The steady-state ablation model is used to estimate the mass loss and heat stored in the heat shield during ablation. A discussion of this approach is given in Reference 1. The calculation model provides for blockage of the convective heating only, during ablation as a result of either radiative or convective heating.

4. Wall Enthalpy

The wall enthalpy is required to correct the cold wall convective heating. Tables are built into the program, which automatically evaluate the wall enthalpy as a function of temperature based on the atmosphere composition which is input.

5. Material Properties

The material properties input are taken as average values commensurate with the range of heating and enthalpy levels expected in the problem. A special consideration has been given to the calculations where radiation heating predominates by permitting an effective radiative heat of vaporization to be input as well as an effective convective heat of vaporization.

The heat shields considered can be homogeneous or composed of two separate materials, as a plastic resin with glass fibers, in which case the material properties for each and the relative proportions of each are specified.

An allowance is made for incomplete vaporization of the melted surface by specifying the vaporizing fraction.

Under ablating conditions, the material properties can be dependent on whether the flow is laminar or turbulent and provision is included for handling both sets of inputs and specifying the transition time; in this case, the convective heat pulse input must contain the laminar and turbulent heating rates.

6. Heat Shield Bond

The calculation model can handle the effects of a bond by specifying the average bond thickness and the bond thermal properties The heat shield weight is reduced by the thermally equivalent (insulative) weight of the bond. The total weight of bond and heat shield is an output.

7. Structural Thermal Capacitance

The calculation model provides for the effects of substructure thermal capacitance on reducing the heat shield weight requirements. Program tests are performed to determine whether a heat shield is needed by comparing the structural thermal capacitance with the total heating and with the peak heat rate to ascertain whether an excessive temperature rise occurs. The possible combinations of tests could yield the result that (a) no heat shield or bond is required, (b) no heat shield is required as the bond and structure are adequate; or (c) a heat shield and bond are required.

C LIMITATIONS

The limitations of the program arise because of the assumptions made in the calculation model, namely:

1. The ablation model does not simulate the detailed phenomena of charring.

2. The choice and performance of heat shield materials could be limited by mechanical forces encountered in flight or while on the ground. These forces are not considered in the program.

3. Minimum thickness limits on the heat shield are not considered.

The simplicity of the calculation model results in the need for spot-checking results with the results of more sophisticated programs, and either modifying the inputs to adjust the agreement or to adjust the outputs with a scale factor. The program is aimed at determining trends parametrically.

II USAGE

A INPUT DEFINITIONS

Name	Preset Values	Symbol	Parameter	Units
AHR	1	H_r/H_s	Recovery factor.	--
CASE	0		A number of the form XX XX used for identification	--
CPB	0	C_{P_B}	Specific heat of bond.	Btu/lb-^oF
CPHS	0	$C_{P_{HS}}$	Specific heat of heat shield.	Btu/lb-^oF
CPSTR	0	$C_{P_{STR}}$	Specific heat of structure.	Btu/lb-^oF
DATE	4 01		A number of the form XX.XX used for identification.	--
DTI	0 1	Δt	Time step for graphical integration of q_c and Hg/RT_o and computation of $\dot{W}_A$.	seconds
EMIS	.0	ϵ	Emissivity	--
EPSIL	0.005		Maximum relative error allowed in iterations for structural capacitance correction.	--
FACTØR	0.1		Initial relative change in heat shield weight for structural capacitance correction iteration	--
HTBL		H_s/RT_o	Free stream gas enthalpy table, maximum number of entries = 150.	--
HVIR	0	H_{VIR}	Heat of vaporization of solid when convective heating is blocked.	Btu/lb

Name	Preset Values	Symbol	Parameter	Units
HV2R	0.	H_{V2R}	Heat of vaporization of resin when convective heating is blocked.	Btu/lb
KB	0.	K_B	Thermal conductivity of bond.	Btu/hr-ft-^oF
KHS	-	K_{HS}	Thermal conductivity of heat shield.	Btu/hr-ft-^oF
KSTR	0.	K_{STR}	Thermal conductivity of structure.	Btu/hr-ft-^oF
LAM	0.		Array of material properties for laminar flow, arranged as follows:	--
		f_1	Vaporization fraction of solid	--
		H_{V1}	Heat of vaporization of solid	Btu/lb
		η_1	Transpiration fraction of solid	--
		X	Solid fraction	--
		f_2	Vaporization fraction of resin	--
		H_{V2}	Heat of vaporization of resin	Btu/lb
		η_2	Transpiration fraction of resin.	--
MEMØ	0.		A number of the form XX XX used for identification.	--
MXIT	50.		Maximum number of iterations in structural capacitance correction.	--
QCMULT	1.		Convective heat pulse multiplier.	--
QRMULT	1.		Radiative heat pulse multiplier.	--
QTBL		q_c	Convective heat pulse table, maximum number of entries = 150.	Btu/ft^2-sec

Name	Preset Values	Symbol	Parameter	Units
RHØB	0.	ρ_B	Density of bond.	lb/ft^3
RHØHS	0.	ρ_{HS}	Density of heat shield.	lb/ft^3
RHØSTR	0.	ρ_{STR}	Density of structure.	lb/ft^3
RTBL		q_r	Radiative heat pulse table, maximum number of entries = 150.	Btu/ft^2-sec
TABL	0.	T_A	Ablation temperature	^oF
TBL1	See program		Table of ($\Delta T_R/\Delta T_S, \alpha t/L^2$), arranged with first a value of $\Delta T_R/\Delta T_S$ then $\alpha t/L^2$, then the next pair, etc. Maximum number of entries = 25 pairs.	--
TBL2	See program		Table of ($\alpha t/L^2$, $\Delta T_M/\Delta T_S$), arranged with first a value of $\alpha t/L^2$, then $\Delta T_M/\Delta T_S$, then the next pair, etc. Maximum number of entries = 25 pairs.	--
TEMPI	0.	T_i	Initial Temperature.	^oF
TIME	0.	t	Table of independent variable time for use with HTBL, RTBL, and QTBL dependent variable arrays. Maximum number of entries = 150.	seconds
TMSTR	0	$T_{M_{ST}}$	Melting temperature of structure	^oF
TREAR	0.	T_R	Maximum allowable design rear temperature.	^oF
TSTART	0.	t_o	Start of reentry heating.	seconds
TSTØP	0.	t_f	End of reentry heating	seconds
TTRANS	1000.	$t_{f_{con}}$	Time transition occurs in heating	second

Name	Preset Values	Symbol	Parameter	Units
TURB	0.		Array of material properties for turbulent flow, arranged as LAM (see above)	--
WTB	0.	W_B	Weight of bond.	lb/ft^2
WTSTR	0.	W_{STR}	Weight of structure.	lb/ft^2
XA	0.	X_A	Mole fraction of argon in undissociated mixture.	--
XC	0.	X_C	Mole fraction of CO_2 in undissociated mixture.	--
XN	0.	X_N	Mole fraction of N_2 in undissociated mixture.	--
XØ	0.	X_o	Mole fraction of O_2 in undissociated mixture.	--

B INPUT PROCEDURES

Input procedures include the following:

1. Input heat shield, structure, and bond properties.

2. Input QTBL, HTBL, and RTBL as a function of TIME (NOTE: for each TIME input, there must be a QTBL, HTBL, and RTBL input; maximum 150 values for each table).

In stacking cases it is necessary to add at least one 0. value at the end of the TIME table after the first case if the number of entries in the table is decreased. This 0. is used internally as an indication of the end of the table.

3. If transition does not occur during the convective heat pulse, input only the LAM array of material properties.

4. If transition occurs during convective heat pulse, input both LAM and TURB arrays and TTRANS, the time at which pulse switches from laminar to turbulent flow.

342<

5. Input atmospheric constituents, initial temperature, and stop time of problem.

6. Input design rear temperature of problem.

7. For succeeding cases, input only the changes desired. However, note (2) above if TIME, HTBL, QTBL, and RTBL are to be changed.

8. A set of computer input forms are provided for the user. All the data shown on the form is keypunched when the variable is supplied.

C OUTPUT DEFINITIONS

External Name	Internal Name	Parameter	Units
ACTUAL TSTØP	TSTØP	t_f used for problem.	seconds
CASE	CASE	Identification number	--
CØRRECTED WINS	WEIGHT	Insulation weight corrected for structural capacitance and bond capacitance.	lbs/ft^2
CRMAX	RQCMAX	Maximum combined heating rate.	Btu/ft^2-sec
DATE	DATE	Identification number.	
DTM	DTM	Average temperature rise.	^oF
HADJ	HGTØT	Average stagnation enthalpy	--
MEMØ	MEMØ	Identification number.	--
MINCRABL	QR	Minimum combined heat rate necessary for ablation.	Btu/ft^2-sec
QCTØT	QTØT	Integrated convective heating including multiplier.	Btu/ft^2
QRTØT	QRRA	Integrated radiative heating including multiplier.	Btu/ft^2
QTØTREQ	QTREQT	Combined integrated heating necessary to require heat shield.	Btu/ft^2

External Name	Internal Name	Parameter	Units
TADJ	TADJ	Start time of insulation problem after end of ablation.	seconds
TCRMAX	RTQMAX	Time of maximum combined heating rate.	seconds
TI	TI	Initial time of constant temperature problem.	seconds
TR	TR	Time of maximum rear temperature.	seconds
TSMAX	TS2	Maximum surface temperature of insulation material.	°F
TTEST1	TTEST1	Structural surface temperature attained without heat shield, must be ≤ TMLTSTR to stop problem.	°F
TTEST2	TTEST2	Structural rear temperature attained without heat shield, must be ≤ TREAR to stop problem.	°F
TURB	FCØN (1, 1-7)	Array of material properties for turbulent flow.	--
T1A	T1A	Start time of ablation.	seconds
T2A	T2A	Time ablation ends.	seconds
WA	WA	Ablated weight.	lb/ft^2
WINS	WT, W9	Insulation weight before capacitance corrections.	lb/ft^2
WTØT	WTØTAL	Total heat shield weight including bond.	lb/ft^2

When ablation occurs, there are printed out 8 columns arranged time, ablation rate, time, ablation rate, etc., from left to right. Time is in seconds, ablation rate is in $lb/sec\text{-}ft^2$. Internally, these are called A27A(J), WDØT(J).

D. SAMPLE PROBLEM

1. Statement of Problem

Determine the heat shield weight for the configuration and trajectory used in the sample problems of Programs 1880, 1885. The heat shield material properties are to be specified as well as the necessary data on the bond and substructure.

2. Input Form

The input form containing all the necessary input is shown on the following pages. A number of cases are shown, representing the heating at several stations on the vehicle. The keypunched input shown should be checked with the input form.

The results indicate the integrated radiation and convective heating, and the heat load for which a heat shield is required. The maximum combined heating rate, and the time at which it occurs is shown. The minimum combined rate necessary for ablation is shown, and can be seen to be larger than the maximum rate occurring. The initial time and adjusted enthalpy are given.

The solution indicates that no ablation occurs and that the heat shield has not fully equilibrated at the time TSTØP; this is further shown by the time required to achieve the maximum rear face temperature. The surface temperature and maximum mean temperature of the heat shield are given. The insulation weight (nonablating) required with and without the effects of thermal capacitance of the structure and bond are shown. Finally, the total weight, including the bond weight is given.

Case 4 indicates that the required convergence was not achieved and the results must be interpreted with caution. Case 5 indicates that the heating level has been reduced to the point where no heat shield is required.

RAD 2-0963
5 63

DIGITAL COMPUTER INPUT REQUEST FORM

PROBLEM NO 1884 | PROGRAMMER

TITLE

MEMO NO	SECTION NO	WORK ORDER NO	(E240 USE ONLY)	REQUESTED BY	EXT	EST. TIME	PAGE 1 OF 6 PAGES

$INPUT

DATE = _____,	MEMØ = _____,	CASE = _____,
AHR = _____,	KHS = _____,	TREAR = _____,
CPB = _____,	KSTR = _____,	TSTART = _____,
CPHS = _____,	MXIT = _____,	TSTØP = _____,
CPSTR = _____,	QCMULT = _____,	TTRANS = _____,
DTI = _____,	QRMULT = _____,	WTB = _____,
EMIS = _____,	RHØB = _____,	WTSTR = _____,
EPSIL = _____,	RHØHS = _____,	XA = _____,
FACTØR = _____,	RHØSTR = _____,	XC = _____,
HV1R = _____,	TABL = _____,	XN = _____,
HV2R = _____,	TEMPI = _____,	XØ = _____,
KB = _____,	TMSTR = _____,	

LAM = _____, _____, _____, _____, _____,
_____, _____, _____, _____, _____,

TURB = _____, _____, _____, _____, _____,
_____, _____, _____, _____, _____,

TBL1 = _____, _____, _____, _____, _____,
_____, _____, _____, _____, _____,
_____, _____, _____, _____, _____,
_____, _____, _____, _____, _____,
_____, _____, _____, _____, _____,
_____, _____, _____, _____, _____,
_____, _____, _____, _____, _____,
_____, _____, _____, _____, _____,
_____, _____, _____, _____, _____,
_____, _____, _____, _____, _____,

TBL2 = _____, _____, _____, _____, _____,
_____, _____, _____, _____, _____,
_____, _____, _____, _____, _____,
_____, _____, _____, _____, _____,
_____, _____, _____, _____, _____,
_____, _____, _____, _____, _____,
_____, _____, _____, _____, _____,
_____, _____, _____, _____, _____,
_____, _____, _____, _____, _____,
_____, _____, _____, _____, _____,

HTBL = _____, _____, _____, _____, _____,
_____, _____, _____, _____, _____,
_____, _____, _____, _____, _____,
_____, _____, _____, _____, _____,
_____, _____, _____, _____, _____,
_____, _____, _____, _____, _____,
_____, _____, _____, _____, _____,
_____, _____, _____, _____, _____,
_____, _____, _____, _____, _____,
_____, _____, _____, _____, _____,
_____, _____, _____, _____, _____,
_____, _____, _____, _____, _____,
_____, _____, _____, _____, _____,
_____, _____, _____, _____, _____,
_____, _____, _____, _____, _____,
_____, _____, _____, _____, _____,
_____, _____, _____, _____, _____,
_____, _____, _____, _____, _____,
_____, _____, _____, _____, _____,
_____, _____, _____, _____, _____,

HTBL = (Continued)

QTBL =

QTBL = (Continued)

RTBL =

RAD 2-0984
5 63

DIGITAL COMPUTER INPUT REQUEST FORM	PROBLEM NO 1884	MEMO NO.	SECTION NO	CONTINUATION SHEET PAGE 5 OF 6 PAGES

RTBL = (Continued)

TIME =

RAD 2-0984
5 63

DIGITAL COMPUTER INPUT REQUEST FORM	PROBLEM NO	MEMO NO	SECTION NO	CONTINUATION SHEET
	1884			PAGE 6 OF 6 PAGES

TIME (Continued) =

_____, _____, _____, _____, _____,
_____, _____, _____, _____, _____,
_____, _____, _____, _____, _____,
_____, _____, _____, _____, _____,
_____, _____, _____, _____, _____,
_____, _____, _____, _____, _____,
_____, _____, _____, _____, _____,
_____, _____, _____, _____, _____,
_____, _____, _____, _____, _____,
_____, _____, _____, _____, _____,

$

RAD 2 0963
5 63

DIGITAL COMPUTER INPUT REQUEST FORM	PROBLEM NO	1884	PROGRAMMER:
	TITLE		

MEMO NO	SECTION NO	WORK ORDER NO	(E240 USE ONLY)	REQUESTED BY	EXT.	EST TIME	PAGE 1 OF 6 PAGES
	K420	W305-050-0005		P. Levine	2996		

$INPUT

DATE	=		MEMØ	=		CASE	=	1.0
AHR	=		KHS	=	.058	TREAR	=	400.
CPB	=	.25	KSTR	=	125.	TSTART	=	
CPHS	=	.44	MXIT	=		TSTØP	=	411.6
CPSTR	=	.3	QCMULT	=	1.	TTRANS	=	
DTI	=		QRMULT	=		WTB	=	.16
EMIS	=	.76	RHØB	=	30.	WTSTR	=	0.5075
EPSIL	=		RHØHS	=	39.4	XA	=	
FACTØR	=		RHØSTR	=	172.0	XC	=	.20
HV1R	=	10000.	TABL	=	3700.	XN	=	.80
HV2R	=		TEMPI	=	100.	XØ	=	
KB	=	.1	TMSTR	=	1000.			

LAM = 1., -2390., 1.53, 1.,

TURB =

TBL1 =

TBL2 =

HTBL = 127.5, 130.9, 131.1, 131.4, 131.7,
132.0, 132.2, 132.5, 132.7, 132.9,
133.0, 133.1, 133.0, 132.8, 132.3,
131.4, 129.9, 128.0, 126.4, 122.8,
116.7, 108.2, 98.6, 89.4, 80.7,
72.5, 64.7, 57.4, 50.5, 44.1,
38 2, 32 7, 27.6, 23 1, 19 0,
15 3, 12.9, 10.8, 8.9, 7.2,
5.8, 4.7, 3.9, 3.7, 4.0,

HTBL (Continued) =

QTBL =

0.1	1.0	1.2	1.5	1.9
2.3	2.8	3.4	4.1	5.1
6.2	7.6	9.4	11.4	14.1
16.8	20.3	23.8	27.2	28.3
29.4	30.4	28.7	26.4	23.8
21.1	18.5	15.9	13.5	11.2
9.2	7.4	5.8	4.4	3.2
2 3	1.7	1.2	0.8	0.6
0.3	0.2	0.1	0.0	0.0

RAD 2-0964 5 63

DIGITAL COMPUTER INPUT REQUEST FORM	PROBLEM NO.	MEMO NO	SECTION NO	CONTINUATION SHEET
	1884			PAGE 4 OF 6 PAGES

QTBL = _____, _____, _____, _____, _____,
(Continued)
_____, _____, _____, _____, _____,
_____, _____, _____, _____, _____,
_____, _____, _____, _____, _____,
_____, _____, _____, _____, _____,
_____, _____, _____, _____, _____,
_____, _____, _____, _____, _____,
_____, _____, _____, _____, _____,
_____, _____, _____, _____, _____,
_____, _____, _____, _____, _____,

RTBL = 45* 0.0, _____, _____, _____, _____,
_____, _____, _____, _____, _____,
_____, _____, _____, _____, _____,
_____, _____, _____, _____, _____,
_____, _____, _____, _____, _____,

_____, _____, _____, _____, _____,
_____, _____, _____, _____, _____,
_____, _____, _____, _____, _____,
_____, _____, _____, _____, _____,
_____, _____, _____, _____, _____,

_____, _____, _____, _____, _____,
_____, _____, _____, _____, _____,
_____, _____, _____, _____, _____,
_____, _____, _____, _____, _____,
_____, _____, _____, _____, _____,

_____, _____, _____, _____, _____,
_____, _____, _____, _____, _____,
_____, _____, _____, _____, _____,
_____, _____, _____, _____, _____,
_____, _____, _____, _____, _____,

RTBL (Continued) =

TIME = 0.0, 83.59, 91.01, 98.59, 106.29,
114.11, 122.04, 130.15, 138.41, 146.83,
155.43, 164.26, 173.32, 182.60, 192.13,
201.94, 212.11, 221.42, 229.50, 236.71,
243.49, 250.18, 256.24, 261.31, 265.89,
270.19, 274.35, 278.41, 282.47, 286.62,
290.91, 295.42, 300.24, 305.47, 311.25,
317.80, 323.33, 329.62, 336.92, 345.61,
356 33, 370.26, 389.41, 426.40, 473.0,

TIME = (Continued)

$

$ INPUT

CASE = 2.0

WTSTR = 0.5266
QCMULT = 0.76

$

$ INPUT

CASE = 3 0

QCMULT = 0.354

$

$ INPUT

CASE = 4 0

QCMULT = 0 081

$

$ INPUT

CASE = 5.0

QCMULT = 0.00332

$

DATE= 5.16 MEMO=184.00 CASE= 1.00

IBLDR 12/01/64

* MEMORY MAP *

SYSTEM			00000 THRU 02717								
FILE BLOCK ORIGIN			02720								
FILES 1.	UNIT05										
2.	UNIT06										
FILE LIST ORIGIN			02750								
PRE-EXECUTION INITIALIZATION			02754								
CALL ON OBJECT PROGRAM			02777								
OBJECT PROGRAM			03004 THRU 41134								

DECK ORIGIN CONTROL SECTIONS (/NAME/=NON-0 LENGTH, (LOC)=DELETED, *=NOT REFERENCED)

1. 1884	03004	.....	05247 *								
2. SP1884	05261	PR1884	17241								
3. SFINW1	17606	FINW1	17736								
4. SCURVE	20007	CURVE	20075								
5. SCRAFT	20151	CRFIT	22251								
6. STLUQ	22340	TLUQ	22443								
7. SARTLU	22505	ARTLU	22717								
8. .LXCON	23070	.LXSTR	23070 *	.LXSTP	23074	.LXOUT	23142	.LXRTN	23154	IBFXIT	23154 *
		.LXCAL	23157 *	.LXFAR	23157	.DOCLS	23341 *	.LXARG	23510	.LO	23533 *
		.CLSE	23561	.LPBL	23562 *	.LUNB	23543	.DFOUT	23564		
9. .IODEF	23550	.DEFIN	23550	.ATTAC	23554 *	.CLOSE	23556	.OPEN	23560	.READ	23562
		.WRITE	23564	.BSR	23574 *	.RFADR	23604	.RELES	23606 *	.LAREA	23617
		.LFBLK	23635	.LTSX	23640 *	.AREA1	23652	.LUNBL	23660	.ENTRY	23664
		.GOA	23717	.GO	23723	.DERR	23737	.NJPXI	23740	.COMXI	23742
		.EX34	23764								
10. .LXSL	23771	.LXSEL	23771	LXCSEL	23772	.LXTST	23775 *	.LXOVL	24035 *	.LXRCT	24046 *
		.LXIND	24115 *	.LXOLS	24120 *	.LXFLS	24121 *	.LTCH	24132		
11. .FPTRP	24130	.FFPT.	24130 *	.FPOUT	24267	.FPARG	24306	/.COUNT/	24310 *	OVFLOW	24361 *
12. .ERAS.	24370	E.1	24370	E.2	24371	E.3	24372	E.4	24373		
13. .XCC.	24374	CC.1	24374	CC.2	24375	CC.3	24376	CC.4	24377		
14. XIT	24400	EXIT	24400	.EXIT.	24400 *						
15. FXFM	24401	.FXEM.	24401	.FXOUT	24736	.FXARG	24744	/.OPTM./	25020		
16. FOUT	25031	.FOUT.	25031								
17. FCNV	25373	.FCON.	25373	.FCNV.	25416	.ENDFS	25431	.CNVSW	25433	.FDX1	25437
		.FOX2	25440	.DBC	25442	.DBC0	25553	.DBC9	25566	.DBC10	25573
		.DBC20	25621	.DDSW	25631	.DDFIX	25640	.FIXSW	25646	.DDRC	25723
		.DDR31	26175	.DDR32	26177	.D1	26202	.D2	26204	.FERR2	26271 *
		.ANPT	26325	.ONPT	26342	.LNTP	26415	.AOUT	26465	.DFLT	26503
		.FLT	26637	.DEXPN	26727	.FXD	26730	.H3UT	27060	.INTG	27130
		.LOUT	27246	.OOUT	27265	.XCF	27316	.TEST	30023	.KOUNT	30026
		.LIST	30051	.DDNG	30042	.OUTBF	30196	.BUF	30134	.OSTO	30135
		.WIDTH	30136	.GAIN	30137	.GAIN1	30140	.FBDBF	30150	.DDDFL	30173
		.DDFLG	30174	.MOD	30175	.PEX	30176	.FCXP	30177	.DIG	30200
18. FIOS	30220	.FIOS.	30220	.FSEL.	30360	.FILR.	30364	.FRTB.	30373 *	.FRTD.	30400
		.FIL.	30403	.FLG	30405 *	.FOPN	30411 *	NEOF	30415 *	.TOUT.	30540
		.REED	30566 *	.BIN	30567 *	.FCT	30570	.FCKSZ	30572 *		
19. FIOH	30654	.FIOH.	30654	.FFIL.	31443	.FRTN.	31470 *				
20. FWRD	31655	.FWRD.	31655								
21. FWRU	31701	.FWRU.	31701								
22. FWRO	31725	.FWRO.	31725	.FREST	32230 *						
23. FRDU	32332	.FRDU.	32332								
24. UN05	32373	.UN05.	32373								
25. UN06	32374	.UN06.	32374	.BUFSZ	32375						

IBLDR 12/01/64

26. FIOU	32400	.FIOU.	32400	.CTUIO	33053	.NMLST	33076	.NAME.	34201	.INTAP	34202
27. FLOG	34625	ALOG10	34625 *	ALOG	34627						
28. FXPF	34766	EXP	34766								
29. FSQR	35106	SQRT	35106								
30. FXP3	35213	.XP3.	35213								
31. .IOCS	35340	.LIO.	35340	.MONSW	35360	.TEQR	35427	.DEFI.	35807	.UNIX	35952 *
		.CLOS.	35572	.ATTC.	35605	.SHI	36017 *	.SHO	36061 *	.OPEN.	36102
		.BPA	36130 *	.OP7	36161 *	.OPO.2	36175 *	.RLSE.	36247	.RER2.	36247
		.READ.	36250	.RER1.	36273	.WRIT.	36275	.MVT1A	36463 *	.EOFEX	36544 *
		.FFCIT	36614	.GTIOX	36637	.RWT	36753 *	.RE7	37377 *	.ENDTB	40033
		.SEL59	40035 *	.BSR.	40046	.EOTOF	40573	.CTOF3	40601 *	.SWITC	40630
		.TCHEX	41131	.BASIO	41134 *						
32. .IOCSM	41135										

I/O BUFFERS	41135 THRU 77700	
UNUSED CORE	77701 THRU 77777	

```
$INPUT
 BATE  =       0.51600000E-01,
 MEMO  =       0.10400000E 03,
 CASE  =       0.10000000E 01,
 AMP   =       0.10000000E 01,
 TABL  =       0.97000000E-04,
 TREAR =       0.40000000E-03,
 TEMPI =       0.10000000E 03,
 EMIS  =       0.76000000E 00,
 TSTART=       0.00000000E-38,
 DTI   =       0.10000000E-00,

 TBL1  =       0.00000000E-38,   0.00000000E-38,   0.50000000E-02,   0.50000000E-01,   0.30000000E-02,
               0.60000000E-01,   0.15000000F-01,   0.70000000E-01,   0.26000000E-01,   0.80000000E-01,
               0.39000000E-01,   0.90000000E-01,   0.51000000E-01,   0.10000000E-00,   0.92000000E-01,
               0.12500000E 00,   0.18200000E 00,   0.17500000E 00,   0.27400000E 00,   0.22500000E 00,
               0.35700000E-00,   0.27500000E 00,   0.46500000E 00,   0.35000000E 00,   0.52700000E 00,
               0.40000000E 00,   0.58400000E 00,   0.45000000E 00,   0.63000000E 00,   0.50000000E 00,
               0.67400000E 00,   0.55000000E 00,   0.71300000E 00,   0.68000000E 00,   0.72000000E 00,
               0.65000000E 00,   0.77400000E 00,   0.70000000E 00,   0.80100000E 00,   0.75000000E 00,
               0.82400000E 00,   0.80000000E 00,   0.84500000E 00,   0.85000000E 00,   0.86300000E 00,
               0.90000000E 00,   0.10000000F 01,   0.10000000E 01,   0.50000000E 03,   0.10000000E 01,

 TBL2  =       0.00000000E-38,   0.00000000E-38,   0.25000000E-02,   0.50000000E-01,   0.10000000E-01,
               0.11400000E-00,   0.25000000E-01,   0.14000000E-00,   0.59000000E-01,   0.25400000E-00,
               0.69000000E-01,   0.30000000E 00,   0.10000000E 00,   0.35000000E 00,   0.13500000E 00,
               0.42000000E-00,   0.17500000E-00,   0.47500000E-00,   0.20000000E-00,   0.50600000E-00,
               0.25000000F 00,   0.56200000E 00,   0.30000000E 00,   0.61400000E 00,   0.35000000E 00,
               0.65000000E 00,   0.40000000E 00,   0.69900000E 00,   0.45000000E 00,   0.73400000E 00,
               0.50000000E 00,   0.76400000E 00,   0.55000000E 00,   0.79100000E 00,   0.60000000E 00,
               0.81600000E 00,   0.65000000E 00,   0.83800000E 00,   0.70000000E 00,   0.85700000E 00,
               0.75000000E 00,   0.87400000E 00,   0.80000000E 00,   0.88900000E 00,   0.90000000E 00,
               0.91200000E 00,   0.10000000E 01,   0.10000000E 01,   0.00000000E-38,   0.00000000E-38,

 CPSTR =       0.30000000E-00,

 WTSTR =       0.50750000E-00,

 HAIT  =       0.50000000E-02,

 EPSIL =       0.50000000E-02,

 FACTOR=       0.11000000E 00,

 TIME  =       0.00000000E-38,   0.83590000E-02,   0.91010000E-02,   0.98590000E-02,   0.10629000E-03,
               0.11411000E 03,   0.12204000E 03,   0.13015000E 03,   0.13841000E 03,   0.14683000F 03,
               0.15543000E-03,   0.16426000E-03,   0.17332000E-03,   0.18269000E-03,   0.19238000E-03,
               0.20194000E 03,   0.21211000E 03,   0.22142000E 03,   0.22950000E 03,   0.23671000E 03,
               0.24349000E-03,   0.25018000E-03,   0.25624000E-03,   0.26191000E-03,   0.26589000E-03,
               0.27019000E 03,   0.27435000E 03,   0.27841000E 03,   0.28247000F 03,   0.28662000E 03,
```

0.29091000E 03,	0.29542000E 03,	0.30024000E 03,	0.30547000E 03,	0.31125000E 03,
0.31780000E 03,	0.32333000E 03,	0.32962000E 03,	0.33692000E 03,	0.34561000E 03,
0.35633000E 03,	0.37026000E 03,	0.38941000E 03,	0.42640000E 03,	0.47300000E 03,
0.00000000E-38,	0.00000000E-38,	0.00000000E-38,	0.00000000E-38,	0.00000000E-38,
0.00000000E-38,	0.00000000E-38,	0.00000000E-38,	0.00000000E-38,	0.00000000E-38,
0.00000000E-38,	0.00000000E-38,	0.00000000E-38,	0.00000000E-38,	0.00000000E-38,
0.00000000E-38,	0.00000000E-38,	0.00000000E-38,	0.00000000E-38,	0.00000000E-38,
0.00000000E-38,	0.00000000E-38,	0.00000000E-38,	0.00000000E-38,	0.00000000E-38,
0.00000000E-38,	0.00000000E-38,	0.00000000E-38,	0.00000000E-38,	0.00000000E-38,
0.00000000E-38,	0.00000000E-38,	0.00000000E-38,	0.00000000E-38,	0.00000000E-38,
0.00000000E-38,	0.00000000E-38,	0.00000000E-38,	0.00000000E-38,	0.00000000E-38,
0.00000000E-38,	0.00000000E-38,	0.00000000E-38,	0.00000000E-38,	0.00000000E-38,
0.00000000E-38,	0.00000000E-38,	0.00000000E-38,	0.00000000E-38,	0.00000000E-38,
0.00000000E-38,	0.00000000E-38,	0.00000000E-38,	0.00000000E-38,	0.00000000E-38,
0.00000000E-38,	0.00000000E-38,	0.00000000E-38,	0.00000000E-38,	0.00000000E-38,
0.00000000E-38,	0.00000000E-38,	0.00000000E-38,	0.00000000E-38,	0.00000000E-38,
0.10000000E 00,	0.10000000E 01,	0.12000000E 01,	0.15000000E 01,	0.19000000E 01,
0.29000000E 01,	0.20000000E 01,	0.34000000E 01,	0.41000000E 01,	0.51000000E 01,
0.62000000E 01,	0.76000000E 01,	0.94000000E 01,	0.11400000E 02,	0.14100000E 02,
0.16800000E 02,	0.20300000E 02,	0.23800000E 02,	0.27200000E 02,	0.29300000E 02,
0.29400000E 02,	0.30400000E 02,	0.28700000E 02,	0.26400000E 02,	0.23800000E 02,
0.21100000E 02,	0.18500000E 02,	0.15900000E 02,	0.13500000E 02,	0.11200000E 02,
0.92000000E 01,	0.74000000E 01,	0.58000000E 01,	0.44000000E 01,	0.32000000E 01,
0.23000000E 01,	0.17000000E 01,	0.12000000E 01,	0.80000000E 00,	0.60000000E 00,
0.30000000E 00,	0.20000000E 00,	0.10000000E 00,	0.00000000E-38,	0.00000000E-38,
0.00000000E-19,	0.00000000E-19,	0.00000000E-19,	0.00000000E-19,	0.00000000E-19,
-0.00000000E-19,	-0.00000000E-19,	-0.00000000E-19,	-0.00000000E-19,	-0.00000000E-19,
-0.00000000E-19,	-0.00000000E-19,	-0.00000000E-19,	-0.00000000E-19,	-0.00000000E-19,
-0.00000000E-19,	-0.00000000F-19,	-0.00000000E-19,	-0.00000000E-19,	-0.00000000E-19,
0.00000000E-19,	0.00000000E-19,	0.00000000E-19,	0.00000000E-19,	0.00000000E-19,
-0.00000000E-19,	-0.00000000E-19,	-0.00000000E-19,	-0.00000000E-19,	-0.00000000E-19,
-0.00000000E-19,	-0.00000000E-19,	-0.00000000E-19,	-0.00000000E-19,	-0.00000000E-19,
0.00000000E-19,	0.00000000E-19,	0.00000000E-19,	0.00000000E-19,	0.00000000E-19,
-0.00000000E-19,	-0.00000000E-19,	-0.00000000E-19,	-0.00000000E-19,	-0.00000000E-19,
-0.00000000E-19,	-0.00000000E-19,	-0.00000000E-19,	-0.00000000E-19,	-0.00000000E-19,
0.00000000E-19,	0.00000000E-19,	0.00000000E-19,	0.00000000E-19,	0.00000000E-19,
-0.00000000E-19,	-0.00000000E-19,	-0.00000000E-19,	-0.00000000E-19,	-0.00000000E-19,
-0.00000000E-19,	-0.00000000E-19,	-0.00000000E-19,	-0.00000000E-19,	-0.00000000E-19,
0.12750000E 03,	0.13090000E 03,	0.13110000E 03,	0.13140000E 03,	0.13170000E 03,
0.13200000E 03,	0.13220000E 03,	0.13250000E 03,	0.13270000E 03,	0.13290000E 03,
0.13300000E 03,	0.13310000E 03,	0.13300000E 03,	0.13280000E 03,	0.13230000E 03,
0.13140000E 03,	0.12990000E 03,	0.12800000E 03,	0.12640000E 03,	0.12280000E 03,

0.11670000E 03,	0.11820000E 03,	0.98400000E 02,	0.89400000E 02,	0.80700000E 02,
0.72500000E 02,	0.64700000E 02,	0.57400000E 02,	0.50500000E 02,	0.44100000E 02,
0.38200000E 02,	0.32700000E 02,	0.27600000E 02,	0.23100000E 02,	0.19000000E 02,
0.15300000E 02,	0.12900000E 02,	0.10800000E 02,	0.89000000E 01,	0.72000000E 01,
0.57600000E 01,	0.47000000E 01,	0.37800000E 01,	0.37000000E 01,	0.40000000E 01,
0.00000000E-19,	-0.00000000E-19,	-0.00000000E-19,	-0.00000000E-19,	-0.00000000E-19,
0.00000000E-19,	-0.00000000E-19,	-0.00000000E-19,	-0.00000000E-19,	-0.00000000E-19,
-

```
QRTOT= 0.00000E-38    QCTOT= 0.29804E-04    QTOTRFQ= 0.45675E-02    CRMAX= 0.30400E-02    TCRMAX= 0.25018E-03
   TI= 0.12110E-03    MINCRABL= 0.17746E-03

     NON-ABLATING CASE
HADJ    72.161
SLAB NOT EQUILIBRATED AT END OF PROBLEM
TTRMAX= 0.11034E-05    TSMAX= 0.15792E-04    DTH= 0.72336E-03    ACTUAL TSTOP= 0.41160E-03
WINS= 0.14996E-01    CORRECTED WINS= 0.11399E-01    WTOT= 0.12999E-01

DATE= 5.16    MEMO= 184.00    CASE= 2.00

$INPUT
DATE   =    0.51600000E-01,
MEMO   =    0.10400000E-03,
CASE   =    0.20000000E-01,
AHR    =    0.10000000E-01,
TABL   =    0.37000000E-04,
TREAR  =    0.40000000E-03,
TEMPI  =    0.10000000E-03,
EMIS   =    0.76000000E-00,
TSTART =    0.00000000E-38,
DTI    =    0.10000000E-00,
TBL1   =    0.00000000E-38,    0.00000000E-38,    0.50000000E-02,    0.50000000E-01,    0.80000000E-02,
            0.60000000E-01,    0.15000000E-01,    0.70000000E-01,    0.26000000E-01,    0.80000000E-01,
            0.39000000E-01,    0.90000000E-01,    0.51000000E-01,    0.10000000E-00,    0.92000000E-01,
            0.12500000E 00,    0.18200000E 00,    0.17500000E 00,    0.27400000E 00,    0.22500000E 00,
            0.35700000E 00,    0.27500000E 00,    0.46500000E 00,    0.35000000E 00,    0.52700000E 00,
            0.40000000E 00,    0.58400000E 00,    0.45000000E 00,    0.63000000E 00,    0.50000000E 00,
            0.67400000E 00,    0.55000000E 00,    0.71300000E 00,    0.60000000E 00,    0.72000000E 00,
            0.65000000E 00,    0.77400000E 00,    0.70000000E 00,    0.80100000E 00,    0.75000000E 00,
            0.82400000E 00,    0.80000000E 00,    0.84500000E 00,    0.85000000E 00,    0.86300000E 00,
            0.90000000E 00,    0.10000000E 01,    0.10000000E 01,    0.50000000E 03,    0.10000000E 01,
TBL2   =    0.00000000E-38,    0.00000000E-38,    0.25000000E-02,    0.50000000E-01,    0.10000000E-01,
            0.11400000E-00,    0.25000000E-01,    0.18000000E-00,    0.50000000E-01,    0.25400000E-00,
            0.69000000E-01,    0.30000000E 00,    0.10000000E 00,    0.35000000E 00,    0.13500000E 00,
            0.42000000E-00,    0.17500000E-00,    0.47500000E-00,    0.20000000E-00,    0.50600000E-00,
            0.25000000E 00,    0.56200000E 00,    0.30000000E 00,    0.61400000E 00,    0.35000000E 00,
            0.65000000E-00,    0.40000000E-00,    0.69900000E-00,    0.45000000E-00,    0.73300000E-00,
            0.50000000E 00,    0.76400000E 00,    0.55000000E 00,    0.79100000E 00,    0.60000000E 00,
            0.81600000E-00,    0.65000000E-00,    0.83800000E-00,    0.70000000E-00,    0.85700000E-00,
            0.75000000E 00,    0.87400000E 00,    0.80000000E 00,    0.88800000E 00,    0.90000000E 00,
            0.91200000E-00,    0.10000000E-01,    0.10000000E-01,    0.00000000E-38,    0.00000000E-38,
CPSTR  =    0.30000000E-00,
WTSTR  =    0.52660000E-00,
MXIT   =    0.50000000E-02,
EPSIL  =    0.50000000E-02,
FACTOR =    0.10000000E-00,
TIME   =    0.00000000E-38,    0.83590000E-02,    0.91010000E-02,    0.98590000E-02,    0.10629000E-03,
            0.11411000E 03,    0.12204000E 03,    0.13015000E 03,    0.13841000E 03,    0.14683000E 03,
            0.15543000E 03,    0.16426000E 03,    0.17332000E-03,    0.18260000E-03,    0.19213000E-03,
            0.20194000E 03,    0.21211000E 03,    0.22142000E 03,    0.22950000E 03,    0.23671000E 03,
            0.24349000E-03,    0.25018000E-03,    0.25624000E-03,    0.26131000E-03,    0.26589000E-03,
            0.27019000E 03,    0.27435000E 03,    0.27841000E 03,    0.28247000E 03,    0.28662000E 03,
```

	0.29091000E 03,	0.29542000E 03,	0.30024000E 03,	0.30547000E 03,	0.31125000E 03,
	0.31780000E 03,	0.32333000E 03,	0.32962000E 03,	0.33692000E 03,	0.34561000E 03,
	0.35433000E 03,	0.37026000E 03,	0.38941000E 03,	0.42644000E 03,	0.47300000E 03,
	0.00000000E-38,	0.00000000E-38,	0.00000000E-38,	0.00000000E-38,	0.00000000E-38

	0.11670000E-03,	0.10820000E-03,	0.98000000E-02,	0.89400000E-02,	0.80700000E-02,
	0.72500000E 02,	0.64700000E 02,	0.57400000E 02,	0.50500000E 02,	0.44100000E 02,
	0.38200000E-02,	0.32700000E-02,	0.27600000E-02,	0.23100000E-02,	0.19000000E-02,
	0.15300000E 02,	0.12900000E 02,	0.10800000E 02,	0.89000000E 01,	0.72000000E 01,
	0.59000000E-01,	0.47000000E-01,	0.39000000E-01,	0.37000000E-01,	0.40000000E-01,
	-0.00000000E-19,	-0.00000000E-19,	-0.00000000E-19,	-0.00000000E-19,	-0.00000000E-19,
	-0.00000000E-19,	-0.00000000E-19,	-0.00000000E-19,	-0.00000000E-19,	-0.00000000E-19,
	-0.00000000E-19,	-0.00000000E-19,	-0.00000000E-19,	-0.00000000E-19,	-0.00000000E-19,
	0.00000000E-19,	0.00000000E-19,	0.00000000E-19,	0.00000000E-19,	0.00000000E-19,
	-0.00000000E-19,	-0.00000000E-19,	-0.00000000E-19,	-0.00000000E-19,	-0.00000000E-19,
	-0.00000000E-19,	-0.00000000E-19,	-0.00000000E-19,	-0.00000000E-19,	-0.00000000E-19,
	0.00000000E-19,	0.00000000E-19,	0.00000000E-19,	0.00000000E-19,	0.00000000E-19,
	-0.00000000E-19,	-0.00000000F-19,	-0.00000000E-19,	-0.00000000E-19,	-0.00000000E-19,
	0.00000000E-19,	0.00000000E-19,	0.00000000E-19,	0.00000000E-19,	0.00000000E-19,
	-0.00000000E-19,	-0.00000000E-19,	-0.00000000E-19,	-0.00000000E-19,	-0.00000000E-19,
	0.00000000E-19,	0.00000000E-19,	0.00000000E-19,	0.00000000E-19,	0.00000000E-19,
	-0.00000000E-19,	-0.00000000E-19,	-0.00000000E-19,	-0.00000000E-19,	-0.00000000E-19,
	0.00000000E-19,	0.00000000E-19,	0.00000000E-19,	0.00000000E-19,	0.00000000E-19,
	-0.00000000E-19,	-0.00000000E-19,	-0.00000000E-19,	-0.00000000E-19,	-0.00000000E-19,
	0.00000000E-19,	0.00000000E-19,	0.00000000E-19,	0.00000000E-19,	0.00000000E-19,
	-0.00000000E-19,	-0.00000000E-19,	-0.00000000E-19,	-0.00000000E-19,	-0.00000000E-19,
RTBL =	0.00000000E-38,	0.00000000E-38,	0.00000000E-38,	0.00000000E-38,	0.00000000E-38,
	0.00000000E-38,	0.00000000E-38,	0.00000000E-38,	0.00000000E-38,	0.00000000E-38,
	0.00000000E-38,	0.00000000E-38,	0.00000000E-38,	0.00000000E-38,	0.00000000E-38,
	0.00000000E-38,	0.00000000E-38,	0.00000000E-38,	0.00000000E-38,	0.00000000E-38,
	0.00000000E-38,	0.00000000E-38,	0.00000000E-38,	0.00000000E-38,	0.00000000E-38,
	0.00000000E-38,	0.00000000E-38,	0.00000000E-38,	0.00000000E-38,	0.00000000E-38,
	0.00000000E-38,	0.00000000E-38,	0.00000000E-38,	0.00000000E-38,	0.00000000E-38,
	0.00000000E-19,	0.00000000E-19,	0.00000000E-19,	0.00000000E-19,	0.00000000E-19,
	-0.00000000E-19,	-0.00000000E-19,	-0.00000000E-19,	-0.00000000E-19,	-0.00000000E-19,
	-0.00000000E-19,	-0.00000000E-19,	-0.00000000E-19,	-0.00000000E-19,	-0.00000000E-19,
	-0.00000000E-19,	-0.00000000E-19,	-0.00000000E-19,	-0.00000000E-19,	-0.00000000E-19,
	-0.00000000E-19,	-0.00000000E-19,	-0.00000000E-19,	-0.00000000E-19,	-0.00000000E-19,
	-0.00000000E-19,	-0.00000000E-19,	-0.00000000E-19,	-0.00000000E-19,	-0.00000000E-19,
	-0.00000000E-19,	-0.00000000E-19,	-0.00000000E-19,	-0.00000000E-19,	-0.00000000E-19,
	-0.00000000E-19,	-0.00000000E-19,	-0.00000000E-19,	-0.00000000E-19,	-0.00000000E-19,
	-0.00000000E-19,	-0.00000000E-19,	-0.00000000E-19,	-0.00000000E-19,	-0.00000000E-19,
	-0.00000000E-19,	-0.00000000E-19,	-0.00000000E-19,	-0.00000000E-19,	-0.00000000E-19,
	-0.00000000E-19,	-0.00000000E-19,	-0.00000000E-19,	-0.00000000E-19,	-0.00000000E-19,
	-0.00000000E-19,	-0.00000000E-19,	-0.00000000E-19,	-0.00000000E-19,	-0.00000000E-19,
	-0.00000000E-19,	-0.00000000E-19,	-0.00000000E-19,	-0.00000000E-19,	-0.00000000E-19,
LAM =	0.10000000E-01,	-0.23900000E-04,	0.15300000E-01,	0.10000000E-01,	0.00000000E-38,
	0.00000000E-38,	0.00000000E-38,			
TURB =	0.00000000E-38,	0.00000000E-38,	0.00000000E-38,	0.00000000E-38,	0.00000000E-38,
	0.00000000E-38,	0.00000000E-38,			

QCMULT =	0.76000000E 00,
QRMULT =	0.10000000E 01,
KHS =	0.58000000E-01,
TTRANS =	0.10000000E 04,
RHOHS =	0.39400000E 02,
CPHS =	0.44000000E 00,
XN =	0.85000000E 00,
XO =	0.00000000E-38,
XA =	0.00000000E-38,
XC =	0.20000000E 00,
KSTR =	0.12500000E 03,
WTB =	0.16000000E 00,
CPB =	0.25000000E 00,
TSTOP =	0.41160000E 03,
KB =	0.10000000E 00,
RHOSTR =	0.17200000E 03,
TMSTR =	0.10000000E 04,
RHOB =	0.30000000E 02,
HV1R =	0.10000000E 05,
HV2R =	0.00000000E-38,
$ END	

QRTOT= 0.00000E-38 QCTOT= 0.22651E 04 QTOTREQ= 0.47394E 02 CRMAX= 0.23104E-02 TCRMAX= 0.25018E-03
TI= 0.12110E 03 NINCRABL= 0.17746E-03

NON-ABLATING CASE

HADJ 72.161

SLAB NOT EQUILIBRATED AT END OF PROBLEM

TTRMAX= 0.81248E-04 TSMAX= 0.14348E-04 DTH= 0.67248E-03 ACTUAL TSTOP= 0.41160E-03
WINS= 0.14597E-01 CORRECTED WINS= 0.10858E-01 WTOT= 0.12458E-01

DATE= 5.16 MEMO= 184.00 CASE= 3.00

$INPUT

DATE = 0.51600000E 01,
MEMO = 0.18400000E 03,
CASE = 0.30000000E 01,
AHR = 0.10000000E-01,
TABL = 0.37000000E 04,
TREAR = 0.40000000E-03,
TEMPI = 0.10000000E 03,
EMIS = 0.76000000E-00,
TSTART = 0.00000000E-38,
DTI = 0.18000000E 06,

TBL1 =	0.00000000E-38,	0.00000000E-38,	0.50000000E-02,	0.50000000E-01,	0.80000000E-02,
	0.60000000E-01,	0.15000000E-01,	0.70000000E-01,	0.26000000E-01,	0.80000000E-01,
	0.39000000E-01,	0.90000000E-01,	0.51000000E-01,	0.10000000E-00,	0.92000000E-01,
	0.12500000E 00,	0.18200000E 00,	0.17500000E 00,	0.27400000E 00,	0.22500000E 00,
	0.35700000E-00,	0.27500000E-00,	0.44500000E-00,	0.35000000E-00,	0.52700000E-00,
	0.40000000E 00,	0.58400000E 00,	0.45000000E 00,	0.63000000E 00,	0.50000000E 00,
	0.67400000E-00,	0.55000000E-00,	0.71300000E-00,	0.60000000E-00,	0.72000000E-00,
	0.65000000E 00,	0.77400000E 00,	0.70000000E 00,	0.80100000E 00,	0.75000000E 00,
	0.82400000E-00,	0.80000000E-00,	0.84500000E-00,	0.85000000E-00,	0.84300000E-00,
	0.90000000E 00,	0.10000000E 01,	0.10000000E 01,	0.50000000E 03,	0.10000000E 01,
TBL2 =	0.00000000E-38,	0.00000000E-38,	0.25000000E-02,	0.50000000F-01,	0.10000000E-01,
	0.11400000E-00,	0.25000000E-01,	0.10000000E-00,	0.50000000E-01,	0.25400000E-00,
	0.69000000E-01,	0.30000000E 00,	0.10000000E 00,	0.35000000E 00,	0.13500000E 00,
	0.42000000E-00,	0.17500000E-00,	0.47500000E-00,	0.20000000E-00,	0.50600000E-00,
	0.25000000E 00,	0.56200000E 00,	0.30000000E 00,	0.61400000E 00,	0.35000000E 00,
	0.65000000E-00,	0.40000000E-00,	0.69900000E-00,	0.45000000E-00,	0.73300000E-00,
	0.50000000E 00,	0.76400000E 00,	0.55000000E 00,	0.79100000E 00,	0.60000000E 00,
	0.81600000E-00,	0.65000000E-00,	0.83800000E-00,	0.70000000E-00,	0.85700000E-00,
	0.75000000E 00,	0.87400000E 00,	0.80000000E 00,	0.88800000E 00,	0.90000000E 00,
	0.91200000E-00,	0.10000000E 01,	0.10000000E 01,	0.00000000E-38,	0.00000000E-38,

CPSTR = 0.30000000E-00,
WTSTR = 0.52660000E-00,
MXIT = 0.50000000E 02,
EPSIL = 0.50000000E-02,
FACTOR = 0.10000000E-00,

TIME =	0.00000000E-38,	0.83590000E-02,	0.91010000E-02,	0.98590000E-02,	0.10629000E-03,
	0.11411000E 03,	0.12204000E 03,	0.13015000E 03,	0.13841000E 03,	0.14683000E 03,
	0.15543000E-03,	0.16426000E-03,	0.17332000E-03,	0.18260000E-03,	0.19213000E-03,
	0.20194000E 03,	0.21211000E 03,	0.22142000E 03,	0.22950000E 03,	0.23671000E 03,
	0.24349000E-03,	0.25018000E-03,	0.25624000E-03,	0.26131000E-03,	0.26599000E-03,
	0.27019000E 03,	0.27435000E 03,	0.27841000E 03,	0.28247000E 03,	0.28662000E 03,

	0.29091000E 03,	0.29542000E 03,	0.30024000E 03,	0.30547000E 03,	0.31125000E 03,
	0.31780000E 03,	0.32333000E 03,	0.32962000E 03,	0.33692000E 03,	0.34561000E 03,
	0.35633000E 03,	0.37026000E 03,	0.38941000E 03,	0.42644000E 03,	0.47300000E 03,
	0.00000000E-38,	0.00000000E-38,	0.00000000E-38,	0.00000000E-38,	0.00000000E-38,
	0.00000000E-38,	0.00000000E-38,	0.00000000E-38,	0.00000000E-38,	0.00000000E-38,
	0.00000000E-38,	0.00000000E-38,	0.00000000E-38,	0.00000000E-38,	0.00000000E-38,
	0.00000000E-38,	0.00000000E-38,	0.00000000E-38,	0.00000000E-38,	0.00000000E-38,
	0.00000000E-38,	0.00000000E-38,	0.00000000E-38,	0.00000000E-38,	0.00000000E-38,
	0.00000000E-38,	0.00000000E-38,	0.00000000E-38,	0.00000000E-38,	0.00000000E-38,
	0.00000000E-38,	0.00000000E-38,	0.00000000E-38,	0.00000000E-38,	0.00000000E-38,
	0.00000000E-38,	0.00000000E-38,	0.00000000E-38,	0.00000000E-38,	0.00000000E-38,
	0.00000000E-38,	0.00000000E-38,	0.00000000E-38,	0.00000000E-38,	0.00000000E-38,
	0.00000000E-38,	0.00000000E-38,	0.00000000E-38,	0.00000000E-38,	0.00000000E-38,
	0.00000000E-38,	0.00000000E-38,	0.00000000E-38,	0.00000000E-38,	0.00000000E-38,
	0.00000000E-38,	0.00000000E-38,	0.00000000E-38,	0.00000000E-38,	0.00000000E-38,
	0.00000000E-38,	0.00000000E-38,	0.00000000E-38,	0.00000000E-38,	0.00000000E-38,
	0.00000000E-38,	0.00000000E-38,	0.00000000E-38,	0.00000000E-38,	0.00000000E-38,
	0.00000000E-38,	0.00000000E-38,	0.00000000E-38,	0.00000000E-38,	0.00000000E-38,
	0.00000000E-38,	0.00000000E-38,	0.00000000E-38,	0.00000000E-38,	0.00000000E-38,
	0.00000000E-38,	0.00000000E-38,	0.00000000E-38,	0.00000000E-38,	0.00000000E-38,
	0.00000000E-38,	0.00000000E-38,	0.00000000E-38,	0.00000000E-38,	0.00000000E-38,
	0.00000000E-38,	0.00000000E-38,	0.00000000E-38,	0.00000000E-38,	0.00000000E-38,
	0.00000000E-38,	0.00000000E-38,	0.00000000E-38,	0.00000000E-38,	0.00000000E-38,
	0.00000000E-38,	0.00000000E-38,	0.00000000E-38,	0.00000000E-38,	0.00000000E-38,
	0.00000000E-38,	0.00000000E-38,	0.00000000E-38,	0.00000000E-38,	0.00000000E-38,
	0.00000000E-38,	0.00000000E-38,	0.00000000E-38,	0.00000000E-38,	0.00000000E-38,
	0.00000000E-38,	0.00000000E-38,	0.00000000E-38,	0.00000000E-38,	0.00000000E-38,
OTBL =	0.10000000E 00,	0.10000000E 01,	0.12000000E 01,	0.15000000E 01,	0.19000000E 01,
	0.23000000E 01,	0.28000000E 01,	0.34000000E 01,	0.41000000E 01,	0.51000000E 01,
	0.62000000E 01,	0.76000000E 01,	0.94000000E 01,	0.11400000E 02,	0.14100000E 02,
	0.16800000E 02,	0.20300000E 02,	0.23800000E 02,	0.27200000E 02,	0.28300000E 02,
	0.29400000E 02,	0.30400000E 02,	0.28700000E 02,	0.26400000E 02,	0.23800000E 02,
	0.21100000E 02,	0.18500000E 02,	0.15900000E 02,	0.13500000E 02,	0.11200000E 02,
	0.97000000E 01,	0.74000000E 01,	0.58000000E 01,	0.44000000E 01,	0.32000000E 01,
	0.23000000E 01,	0.17000000E 01,	0.12000000E 01,	0.80000000E 00,	0.50000000E 00,
	0.30000000E 00,	0.20000000E 00,	0.10000000E 00,	0.00000000E-38,	0.00000000E-38,
	0.00000000E-19,	0.00000000E-19,	0.00000000E-19,	0.00000000E-19,	0.00000000E-19,
	-0.00000000E-19,	-0.00000000E-19,	-0.00000000E-19,	-0.00000000E-19,	-0.00000000E-19,
	0.00000000E-19,	0.00000000E-19,	0.00000000E-19,	0.00000000E-19,	0.00000000E-19,
	-0.00000000E-19,	-0.00000000E-19,	-0.00000000E-19,	-0.00000000E-19,	-0.00000000E-19,
	0.00000000E-19,	0.00000000E-19,	0.00000000E-19,	0.00000000E-19,	0.00000000E-19,
	-0.00000000E-19,	-0.00000000E-19,	-0.00000000E-19,	-0.00000000E-19,	-0.00000000E-19,
	0.00000000E-19,	0.00000000E-19,	0.00000000E-19,	0.00000000E-19,	0.00000000E-19,
	-0.00000000E-19,	-0.00000000E-19,	-0.00000000E-19,	-0.00000000E-19,	-0.00000000E-19,
	0.00000000E-19,	0.00000000E-19,	0.00000000E-19,	0.00000000E-19,	0.00000000E-19,
	-0.00000000E-19,	-0.00000000E-19,	-0.00000000E-19,	-0.00000000E-19,	-0.00000000E-19,
	0.00000000E-19,	0.00000000E-19,	0.00000000E-19,	0.00000000E-19,	0.00000000E-19,
	-0.00000000E-19,	-0.00000000E-19,	-0.00000000E-19,	-0.00000000E-19,	-0.00000000E-19,
	0.00000000E-19,	0.00000000E-19,	0.00000000E-19,	0.00000000E-19,	0.00000000E-19,
	-0.00000000E-19,	-0.00000000E-19,	-0.00000000E-19,	-0.00000000E-19,	-0.00000000E-19,
HTBL =	0.12750000E 03,	0.13090000E 03,	0.13110000E 03,	0.13140000E 03,	0.13170000E 03,
	0.13200000E 03,	0.13220000E 03,	0.13250000E 03,	0.13270000E 03,	0.13290000E 03,
	0.13300000E 03,	0.13310000E 03,	0.13300000E 03,	0.13280000E 03,	0.13230000E 03,
	0.13140000E 03,	0.12990000E 03,	0.12800000E 03,	0.12640000E 03,	0.12240000E 03,

366

	0.11670000E-03,	0.10820000E-03,	0.98600000E-02,	0.89400000E-02,	0.80700000E-02,
	0.72500000E 02,	0.64700000E 02,	0.57400000E 02,	0.50500000E 02,	0.44100000E 02,
	0.38200000E-02,	0.32700000E-02,	0.27600000E-02,	0.23100000E-02,	0.19000000E-02,
	0.15300000E 02,	0.12900000E 02,	0.10800000E 02,	0.89000000E 01,	0.72000000E 01,
	0.58000000E-01,	0.47000000E-01,	0.39000000E-01,	0.37000000E-01,	0.40000000E-01,
	-0.00000000E-19,	-0.00000000E-19,	-0.00000000E-19,	-0.00000000E-19,	-0.00000000E-19,
	0.00000000E-19,	0.00000000E-19,	0.00000000E-19,	0.00000000E-19,	0.00000000E-19,
	-0.00000000E-19,	-0.00000000E-19,	-0.00000000E-19,	-0.00000000E-19,	-0.00000000E-19,
	0.00000000E-19,	0.00000000E-19,	0.00000000E-19,	0.00000000E-19,	0.00000000E-19,
	-0.00000000E-19,	-0.00000000E-19,	-0.00000000E-19,	-0.00000000E-19,	-0.00000000E-19,
	0.00000000E-19,	0.00000000E-19,	0.00000000E-19,	0.00000000E-19,	0.00000000E-19,
	-0.00000000E-19,	-0.00000000E-19,	-0.00000000E-19,	-0.00000000E-19,	-0.00000000E-19,
	0.00000000E-19,	0.00000000E-19,	0.00000000E-19,	0.00000000E-19,	0.00000000E-19,
	-0.00000000E-19,	-0.00000000E-19,	-0.00000000E-19,	-0.00000000E-19,	-0.00000000E-19,
	0.00000000E-19,	0.00000000E-19,	0.00000000E-19,	0.00000000E-19,	0.00000000E-19,
	-0.00000000E-19,	-0.00000000E-19,	-0.00000000E-19,	-0.00000000E-19,	-0.00000000E-19,
	0.00000000E-19,	0.00000000E-19,	0.00000000E-19,	0.00000000E-19,	0.00000000E-19,
	-0.00000000E-19,	-0.00000000E-19,	-0.00000000E-19,	-0.00000000E-19,	-0.00000000E-19,
	0.00000000E-19,	0.00000000E-19,	0.00000000E-19,	0.00000000E-19,	0.00000000E-19,
	-0.00000000E-19,	-0.00000000E-19,	-0.00000000E-19,	-0.00000000E-19,	-0.00000000E-19,
	0.00000000E-19,	0.00000000E-19,	0.00000000E-19,	0.00000000E-19,	0.00000000E-19,
	-0.00000000E-19,	-0.00000000E-19,	-0.00000000E-19,	-0.00000000E-19,	-0.00000000E-19,
	0.00000000E-19,	0.00000000E-19,	0.00000000E-19,	0.00000000E-19,	0.00000000E-19,
	-0.00000000E-19,	-0.00000000E-19,	-0.00000000E-19,	-0.00000000E-19,	-0.00000000E-19,
	0.00000000E-19,	0.00000000E-19,	0.00000000E-19,	0.00000000E-19,	0.00000000E-19,
	-0.00000000E-19,	-0.00000000E-19,	-0.00000000E-19,	-0.00000000E-19,	-0.00000000E-19,
	0.00000000E-19,	0.00000000E-19,	0.00000000E-19,	0.00000000E-19,	0.00000000E-19,
	-0.00000000E-19,	-0.00000000E-19,	-0.00000000E-19,	-0.00000000E-19,	-0.00000000E-19,
	0.00000000E-19,	0.00000000E-19,	0.00000000E-19,	0.00000000E-19,	0.00000000E-19,
	-0.00000000E-19,	-0.00000000E-19,	-0.00000000E-19,	-0.00000000E-19,	-0.00000000E-19,
	0.00000000E-19,	0.00000000E-19,	0.00000000E-19,	0.00000000E-19,	0.00000000E-19,
	-0.00000000E-19,	-0.00000000E-19,	-0.00000000E-19,	-0.00000000E-19,	-0.00000000E-19,
	0.00000000E-19,	0.00000000E-19,	0.00000000E-19,	0.00000000E-19,	0.00000000E-19,
	-0.00000000E-19,	-0.00000000E-19,	-0.00000000E-19,	-0.00000000E-19,	-0.00000000E-19,
	0.00000000E-19,	0.00000000E-19,	0.00000000E-19,	0.00000000E-19,	0.00000000E-19,
	-0.00000000E-19,	-0.00000000E-19,	-0.00000000E-19,	-0.00000000E-19,	-0.00000000E-19,
	0.00000000E-19,	0.00000000E-19,	0.00000000E-19,	0.00000000E-19,	0.00000000E-19,
	-0.00000000E-19,	-0.00000000E-19,	-0.00000000E-19,	-0.00000000E-19,	-0.00000000E-19,
	0.00000000E-19,	0.00000000E-19,	0.00000000E-19,	0.00000000E-19,	0.00000000E-19,
RTBL =	0.00000000E-38,	0.00000000E-38,	0.00000000E-38,	0.00000000E-38,	0.00000000E-38,
	0.00000000E-38,	0.00000000E-38,	0.00000000E-38,	0.00000000E-38,	0.00000000E-38,
	0.00000000E-38,	0.00000000E-38,	0.00000000E-38,	0.00000000E-38,	0.00000000E-38,
	0.00000000E-38,	0.00000000E-38,	0.00000000E-38,	0.00000000E-38,	0.00000000E-38,
	0.00000000E-38,	0.00000000E-38,	0.00000000E-38,	0.00000000E-38,	0.00000000E-38,
	0.00000000E-38,	0.00000000E-38,	0.00000000E-38,	0.00000000E-38,	0.00000000E-38,
	0.00000000E-38,	0.00000000E-38,	0.00000000E-38,	0.00000000E-38,	0.00000000E-38,
	0.00000000E-19,	0.00000000E-19,	0.00000000E-19,	0.00000000E-19,	0.00000000E-19,
	-0.00000000E-19,	-0.00000000E-19,	-0.00000000E-19,	-0.00000000E-19,	-0.00000000E-19,
	0.00000000E-19,	0.00000000E-19,	0.00000000E-19,	0.00000000E-19,	0.00000000E-19,
	-0.00000000E-19,	-0.00000000E-19,	-0.00000000E-19,	-0.00000000E-19,	-0.00000000F-19,
	0.00000000E-19,	0.00000000E-19,	0.00000000E-19,	0.00000000E-19,	0.00000000E-19,
	-0.00000000E-19,	-0.00000000E-19,	-0.00000000E-19,	-0.00000000E-19,	-0.00000000F-19,
	0.00000000E-19,	0.00000000E-19,	0.00000000E-19,	0.00000000E-19,	0.00000000E-19,
	-0.00000000E-19,	-0.00000000E-19,	-0.00000000E-19,	-0.00000000E-19,	-0.00000000E-19,
	0.00000000E-19,	0.00000000E-19,	0.00000000E-19,	0.00000000E-19,	0.00000000E-19,
	-0.00000000E-19,	-0.00000000E-19,	-0.00000000E-19,	-0.00000000E-19,	-0.00000000E-19,
	0.00000000E-19,	0.00000000E-19,	0.00000000E-19,	0.00000000E-19,	0.00000000E-19,
	-0.00000000E-19,	-0.00000000E-19,	-0.00000000E-19,	-0.00000000E-19,	-0.00000000E-19,
	0.00000000E-19,	0.00000000E-19,	0.00000000E-19,	0.00000000E-19,	0.00000000E-19,
LAM =	0.10000000E 01,	-0.23900000E 04,	0.15300000E 01,	0.10000000E 01,	0.00000000E 38,
	0.00000000E-38,	0.00000000E-38,			
TURB =	0.00000000E-38,	0.00000000E-38,	0.00000000E-38,	0.00000000E-38,	0.00000000E-38,
	0.00000000E-38,	0.00000000E-38,			
QCMULT =	0.35400000E 00,				
QRMULT =	0.10000000E 01,				
KHS =	0.58000000E-01,				
TTRANS =	0.10000000E 04,				
RHOHS =	0.39400000E 02,				
CPHS =	0.44000000E 00,				
XN =	0.80000000E 00,				
XO =	0.00000000E-38,				
XA =	0.00000000E-38,				
XC =	0.20000000E 00,				
KSTR =	0.12500000E 03,				
WTB =	0.16000000E 00,				
CPB =	0.25000000E 00,				
TSTOP =	0.41160000E 03,				
KB =	0.10000000E 00,				
RHOSTR =	0.17200000E 03,				
TMSTR =	0.10000000E 04,				
RHOB =	0.30000000E 02,				
HV1R =	0.10000000E 05,				
HV2R =	0.00000000E-38,				

$ END

```
 ORTOT= 0.000000E-30     QCTOT= -0.10551E-04     QTOTREQ= 0.67396E-02     CRMAX= 0.10762E-02     TERMAX= 0.25018E-03
    TI= 0.12110E-03     MINCRABL= 0.17746E-03

      NON-ABLATING CASE
 HARD    72.161
 SLAB NOT FOUILIBRATED AT END OF PROBLEM
 TTRMAX= 0.33761E-04     TSMAX= 0.10658E-04     DTM= 0.53959E-03     ACTUAL TST3P= 0.41160E-03
 WINS= 0.13022E-01     CORRECTED WINS= 0.92142E-00     WTOT= 0.10814E-01

 DATE= 5.16     MEMO= 184.00     CASE= 4.00

 $INPUT
 DATE  =      0.51600006E-01,
 MEMO  =      0.18400000E-03,
 CASE  =      0.40000000E-01,
 AHR   =      0.10000000E-01,
 TABL  =      0.37000000E-04,
 TREAR =      0.40000000E-03,
 TEMPI =      0.10000000E-03,
 EMIS  =      0.76000000E-00,
 TSTART=      0.00000000E-38,
 DTI   =      0.10000000E-00,
 TBL1  =      0.00000000E-38,     0.00000000E-38,     0.50000000E-02,     0.50000000E-01,     0.80000000E-02,
              0.60000000E-01,     0.15000000E-01,     0.70000000E-01,     0.26000000E-01,     0.80000000E-01,
              0.39000000E-01,     0.90000000E-01,     0.51000000E-01,     0.10000000E-00,     0.92000000E-01,
              0.12500000E 00,     0.18200000E 00,     0.17500000E 00,     0.27400000E 00,     0.22500000E 00,
              0.35700000E 00,     0.27500000E 00,     0.46500000E 00,     0.35000000E 00,     0.32700000E 00,
              0.40000000E 00,     0.58400000E 00,     0.45000000E 00,     0.63000000E 00,     0.50000000E 00,
              0.67400000E 00,     0.55000000E 00,     0.71300000E 00,     0.60000000E 00,     0.72000000E 00,
              0.65000000E 00,     0.77400000E 00,     0.70000000E 00,     0.80100000E 00,     0.75000000E 00,
              0.82400000E 00,     0.80000000E 00,     0.84500000E 00,     0.85000000E 00,     0.86300000E 00,
              0.90000000E 00,     0.10000000E 01,     0.10000000E 01,     0.50000000E 03,     0.10000000E 01,
 TBL2  =      0.00000000E-38,     0.00000000E-38,     0.25000000E-02,     0.50000000E-01,     0.10000000E-01,
              0.11400000E-00,     0.25000000E-01,     0.10000000E-00,     0.50000000E-01,     0.25400000E-00,
              0.69000000E-01,     0.30000000E 00,     0.10000000E 00,     0.35000000E 00,     0.13500000E 00,
              0.42000000E 00,     0.17500000E 00,     0.47500000E 00,     0.20000000E 00,     0.50600000E 00,
              0.25000000E 00,     0.56200000E 00,     0.30000000E 00,     0.61400000E 00,     0.35000000E 00,
              0.65000000E 00,     0.40000000E 00,     0.69900000E 00,     0.45000000E 00,     0.23300000E 00,
              0.50000000E 00,     0.76400000E 00,     0.55000000E 00,     0.79100000E 00,     0.60000000E 00,
              0.81500000E 00,     0.65000000E 00,     0.83800000E 00,     0.70000000E 00,     0.85700000E 00,
              0.75000000E 00,     0.87400000E 00,     0.80000000E 00,     0.88800000E 00,     0.90000000E 00,
              0.91200000E 00,     0.10000000E 01,     0.10000000E 01,     0.00000000E-38,     0.00000000E-38,
 CPSTR =      0.30000000E-00,
 WTSTR =      0.52660000E-00,
 MXIT  =      0.50000000E-02,
 EPSIL =      0.50000000E-02,
 FACTOR=      0.10000000E 00,
 TIME  =      0.00000000E-38,     0.83590000E-02,     0.91010000E-02,     0.99590000E-02,     0.10629000E-03,
              0.11411000E 03,     0.12204000E 03,     0.13015000E 03,     0.13841000E 03,     0.14683000E-03,
              0.21543000E 03,     0.16426000E-03,     0.17332000E-03,     0.18260000E-03,     0.19213000E-03,
              0.20194000E 03,     0.21211000E 03,     0.22142000E 03,     0.22950000E 03,     0.23671000E 03,
              0.24349000E-03,     0.25018000E-03,     0.25624000E-03,     0.26191000E-03,     0.26589000E-03,
              0.27019000E 03,     0.27435000E 03,     0.27841000E 03,     0.28247000E 03,     0.28662000E 03,
```

	0.29091000E 03,	0.29542000E 03,	0.30024000E 03,	0.30547000E 03,	0.31125000E 03,
	0.31780000E 03,	0.32333000E 03,	0.32962000E 03,	0.33692000E 03,	0.34561000E 03,
	0.35623000E 03,	0.37026000E 03,	0.38941000E 03,	0.41640000E 03,	0.47300000E 03,
	0.00000000E-38,	0.00000000E-38,	0.00000000E-38,	0.00000000E-38,	0.00000000E-38

```
                0.11167000E 03,   0.11820000E 03,   0.98500000E 02,   0.89400000E 02,   0.80700000E 02,
                0.72500000E 02,   0.64700000E 02,   0.57400000E 02,   0.50500000E 02,   0.44100000E 02,
                0.38200000E 02,   0.32700000E 02,   0.27600000E 02,   0.23100000E 02,   0.19000000E 02,
                0.15300000E 02,   0.12900000E 02,   0.10800000E 02,   0.89000000E 01,   0.72000000E 01,
                0.58000000E 01,   0.47000000E 01,   0.39000000E 01,   0.37000000E 01,   0.40000000E 01,
               -0.00000000E-19,  -0.00000000E-19,  -0.00000000E-19,  -0.00000000E-19,  -0.00000000E-19,
               -0.00000000E-19,  -0.00000000E-19,  -0.00000000E-19,  -0.00000000E-19,  -0.00000000E-19,
               -0.00000000E-19,  -0.00000000E-19,  -0.00000000E-19,  -0.00000000E-19,  -0.00000000E-19,
                0.00000000E-19,   0.00000000E-19,   0.00000000E-19,   0.00000000E-19,   0.00000000E-19,
               -0.00000000E-19,  -0.00000000E-19,  -0.00000000E-19,  -0.00000000E-19,  -0.00000000E-19,
                0.00000000E-19,   0.00000000E-19,   0.00000000E-19,   0.00000000E-19,   0.00000000E-19,
               -0.00000000E-19,  -0.00000000E-19,  -0.00000000E-19,  -0.00000000E-19,  -
```

QRTOT= 0.00000E-38 QCTOT= 0.24141E 03 QTOTREQ= 0.47394E 02 ERMAX= 0.24624E 01 IERMAX= 0.25018E 03
TI= 0.12110E 03 MINERABL= 0.17746E 03

NON-ABLATING CASE

HABJ 72.161

SLAB NOT EQUILIBRATED AT END OF PROBLEM
THIS DID NOT CONVERGE IN 20 ITERATIONS , THE LAST VALUES ARE AS FOLLOWS

TTRMAX= 0.52747E 03 TSMAX= 0.46960E 03 DTM= 0.35627E 03 ACTUAL TSTOP= 0.41160E 03

WINS= 0.88799E 00 CORRECTED WINS= 0.33522E 00 WTOT= 0.49522E 00

DATE= 5.16 MEMO= 184.00 CASE= 5.00

$INPUT

DATE = 0.51600000E 01,

MEMO = 0.18400000E 03,

CASE = 0.50000000E 01,

AMR = 0.10000000E 01,

TABL = 0.37000000E 04,

TREAR = 0.40000000E 03,

TEMPI = 0.10000000E 03,

EMIS = 0.76000000E 00,

TSTART = 0.00000000E 38,

DTI = 0.10000000E 00,

TBL1 =	0.00000000E 38,	0.00000000E 38,	0.50000000E 02,	0.50000000E 01,	0.80000000E 02,
	0.60000000E 01,	0.15000000E 01,	0.70000000E 01,	0.26000000E 01,	0.80000000E 01,
	0.39000000E 01,	0.90000000E 01,	0.51000000E 01,	0.10000000E 00,	0.92000000E 01,
	0.12500000E 00,	0.18200000E 00,	0.17500000E 00,	0.27400000E 00,	0.22500000E 00,
	0.35700000E 00,	0.27500000E 00,	0.46500000E 00,	0.35000000E 00,	0.53700000E 00,
	0.40000000E 00,	0.58400000E 00,	0.45000000E 00,	0.63000000E 00,	0.50000000E 00,
	0.67400000E 00,	0.55000000E 00,	0.71300000E 00,	0.60000000E 00,	0.72000000E 00,
	0.65000000E 00,	0.77400000E 00,	0.70000000E 00,	0.80100000E 00,	0.75000000E 00,
	0.82400000E 00,	0.80000000E 00,	0.84500000E 00,	0.85000000E 00,	0.86300000E 00,
	0.90000000E 00,	0.10000000E 01,	0.10000000E 01,	0.50000000E 03,	0.10000000E 01,
TBL2 =	0.00000000E 38,	0.00000000E 38,	0.25000000E 02,	0.60000000E 01,	0.10000000E 01,
	0.11400000E 00,	0.25000000E 01,	0.18000000E 00,	0.50000000E 01,	0.25400000E 00,
	0.69000000E 01,	0.30000000E 00,	0.10000000E 00,	0.35000000E 00,	0.13500000E 00,
	0.42000000E 00,	0.17500000E 00,	0.47500000E 00,	0.20000000E 00,	0.50600000E 00,
	0.25000000E 00,	0.56200000E 00,	0.30000000E 00,	0.61400000E 00,	0.35000000E 00,
	0.65000000E 00,	0.49000000E 00,	0.69900000E 00,	0.45000000E 00,	0.73300000E 00,
	0.50000000E 00,	0.76400000E 00,	0.55000000E 00,	0.79100000E 00,	0.60000000E 00,
	0.81600000E 00,	0.65000000E 00,	0.83800000E 00,	0.70000000E 00,	0.85700000E 00,
	0.75000000E 00,	0.87400000E 00,	0.80000000E 00,	0.88800000E 00,	0.90000000E 00,
	0.91200000E 00,	0.10000000E 01,	0.10000000E 01,	0.00000000E 38,	0.00000000E 38,

CPSTR = 0.30000000E 00,

WTSTR = 0.52660000E 00,

NXIT = 0.50000000E 02,

EPSIL = 0.56000000E 02,

FACTOR = 0.10000000E 00,

TIME =	0.00000000E 38,	0.83590000E 02,	0.91010000E 02,	0.98500000E 02,	0.10629000E 03,
	0.11411000E 03,	0.12204000E 03,	0.13015000E 03,	0.13841000E 03,	0.14683000E 03,
	0.15543000E 03,	0.16426000E 03,	0.17332000E 03,	0.18266000E 03,	0.19213000E 03,
	0.20194000E 03,	0.21211000E 03,	0.22142000E 03,	0.22950000E 03,	0.23671000E 03,
	0.24349000E 03,	0.25018000E 03,	0.25624000E 03,	0.26131000E 03,	0.26589000E 03,
	0.27019000E 03,	0.27435000E 03,	0.27841000E 03,	0.28247000E 03,	0.28662000E 03,

374

	0.29091000E 03,	0.29542000E 03,	-0.30024000E 03,	-0.30547000E 03,	0.31125000E 03,
	0.31780000E 03,	0.32333000E 03,	0.32962000E 03,	0.33692000E 03,	0.34561000E 03,
	0.35633000E 03,	0.37026000E 03,	0.38941000E 03,	0.42640000E 03,	0.47300000E 03,
	0.00000000E-38,	0.00000000E-38,	0.00000000E-38,	0.00000000E-38,	0.00000000E-38,
	0.00000000E-38,	0.00000000E-38,	0.00000000E-38,	0.00000000E-38,	0.00000000E-38,
	0.00000000E-38,	0.00000000E-38,	0.00000000E-38,	0.00000000E-38,	0.00000000E-38,
	0.00000000E-38,	0.00000000E-38,	0.00000000E-38,	0.00000000E-38,	0.00000000E-38,
	0.00000000E-38,	0.00000000E-38,	0.00000000E-38,	0.00000000E-38,	0.00000000E-38,
	0.00000000E-38,	0.00000000E-38,	0.00000000E-38,	0.00000000E-38,	0.00000000E-38,
	0.00000000E-38,	0.00000000E-38,	0.00000000E-38,	0.00000000E-38,	0.00000000E-38,
	0.00000000E-38,	0.00000000E-38,	0.00000000E-38,	0.00000000E-38,	0.00000000E-38,
	0.00000000E-38,	0.00000000E-38,	0.00000000E-38,	0.00000000E-38,	0.00000000E-38,
	0.00000000E-38,	0.00000000E-38,	0.00000000E-38,	0.00000000E-38,	0.00000000E-38,
	0.00000000E-38,	0.00000000E-38,	0.00000000E-38,	0.00000000E-38,	0.00000000E-38,
	0.00000000E-38,	0.00000000E-38,	0.00000000E-38,	0.00000000E-38,	0.00000000E-38,
	0.00000000E-38,	0.00000000E-38,	0.00000000E-38,	0.00000000E-38,	0.00000000E-38,
	0.00000000E-38,	0.00000000E-38,	0.00000000E-38,	0.00000000E-38,	0.00000000E-38,
	0.00000000E-38,	0.00000000E-38,	0.00000000E-38,	0.00000000E-38,	0.00000000E-38,
QTBL =	0.10000000E 00,	0.10000000E 01,	0.12000000E 01,	0.15000000E 01,	0.19000000E 01,
	0.23000000E 01,	0.28000000E 01,	0.34000000E 01,	0.41000000E 01,	0.51000000E 01,
	0.62000000E 01,	0.76000000E 01,	0.94000000E 01,	0.11400000E 02,	0.14100000E 02,
	0.16800000E 02,	0.20300000E 02,	0.23300000E 02,	0.27200000E 02,	0.28300000E 02,
	0.29400000E 02,	0.30400000E 02,	0.28700000E 02,	0.26400000E 02,	0.23800000E 02,
	0.21100000E 02,	0.18500000E 02,	0.15900000E 02,	0.13500000E 02,	0.11200000E 02,
	0.92000000E 01,	0.74000000E 01,	0.58000000E 01,	0.44000000E 01,	0.32000000E 01,
	0.23000000E 01,	0.17000000E 01,	0.12000000E 01,	0.80000000E 00,	0.60000000E 00,
	0.30000000E 00,	0.20000000E 00,	0.10000000E 00,	0.00000000E-38,	0.00000000E-38,
	0.00000000E-19,	0.00000000E-19,	0.00000000E-19,	0.00000000E-19,	0.00000000E-19,
	-0.00000000E-19,	-0.00000000E-19,	-0.00000000E-19,	-0.00000000E-19,	-0.00000000E-19,
	0.00000000E-19,	0.00000000E-19,	0.00000000E-19,	0.00000000E-19,	0.00000000E-19,
	-0.00000000E-19,	-0.00000000E-19,	-0.00000000E-19,	-0.00000000E-19,	-0.00000000E-19,
	0.00000000E-19,	0.00000000E-19,	0.00000000E-19,	0.00000000E-19,	0.00000000E-19,
	-0.00000000E-19,	-0.00000000E-19,	-0.00000000E-19,	-0.00000000E-19,	-0.00000000E-19,
	0.00000000E-19,	0.00000000E-19,	0.00000000E-19,	0.00000000E-19,	0.00000000E-19,
	-0.00000000E-19,	-0.00000000E-19,	-0.00000000E-19,	-0.00000000E-19,	-0.00000000E-19,
	0.00000000E-19,	0.00000000E-19,	0.00000000E-19,	0.00000000E-19,	0.00000000E-19,
	-0.00000000E-19,	-0.00000000E-19,	-0.00000000E-19,	-0.00000000E-19,	-0.00000000E-19,
	0.00000000E-19,	0.00000000E-19,	0.00000000E-19,	0.00000000E-19,	0.00000000E-19,
	-0.00000000E-19,	-0.00000000E-19,	-0.00000000E-19,	-0.00000000E-19,	-0.00000000E-19,
	0.00000000E-19,	0.00000000E-19,	0.00000000E-19,	0.00000000E-19,	0.00000000E-19,
	-0.00000000E-19,	-0.00000000E-19,	-0.00000000E-19,	-0.00000000E-19,	-0.00000000E-19,
	0.00000000E-19,	0.00000000E-19,	0.00000000E-19,	0.00000000E-19,	0.00000000E-19,
	-0.00000000E-19,	-0.00000000E-19,	-0.00000000E-19,	-0.00000000E-19,	-0.00000000E-19,
	0.00000000E-19,	0.00000000E-19,	0.00000000E-19,	0.00000000E-19,	0.00000000E-19,
HTBL =	0.13750000E 03,	0.13090000E 03,	0.13110000E 03,	0.13140000E 03,	0.13170000E 03,
	0.13200000E 03,	0.13220000E 03,	0.13250000E 03,	0.13270000E 03,	0.13290000E 03,
	0.13300000E 03,	0.13310000E 03,	0.13300000E 03,	0.13280000E 03,	0.13230000E 03,
	0.13140000E 03,	0.12990000E 03,	0.12800000E 03,	0.12640000E 03,	0.12280000E 03,

0.11470000E-03,	0.16820070E-03,	0.98600000E-02,	0.89400000E-02,	0.80700000F-02,	
0.72500000E 02,	0.64700000F 02,	0 57400000E 02,	0.50500000F 02,	0.44100000F 02,	
0.38260030F-02,	0.32700000E-02,	0.27600000E-02,	0.23100000E-02,	0.19000000E-02,	
0.15300000E 02,	0.12900000E 02,	0.10800000E 02,	0.89000000E 01,	0.72000000E 01,	
0.59000000E-01,	0.47000000F-01,	0.39000000E-01,	0.37000000E-01,	0.40000000E-01,	
-0.00000000F-19,	-0.00000000E-19,	-0.00000000E-19,	-0.00000000E-19,	-0.00000000E-19,	
0.00000000E-19,	0.00000000E-19,	0.00000000E-19,	0.00000000F-19,	0.00000000E-19,	
-0.00000000E-19,	-0.00000000E-19,	-0.00000000E-19,	-0.00000000E-19,	-0.00000000E-19,	
0.00000000F-19,	0.00000000E-19,	0.00000000E-19,	0.00000000E-19,	0.00000000E-19,	
-0.00000000F-19,	-0.00000000F-19,	-0 00000000E-19,	-0.00000000E-19,	-0.00000000E-19,	
0.00000000E-19,	0.00000000F-19,	0.00000000E-19,	0.00000000F-19,	0.00000000E-19,	
-0.00000000E-19,	-0.00000000E-19,	-0.00000000E-19,	-0.00000000E-19,	-0.00000000E-19,	
0.00000000E-19,	0.00000000E-19,	0.00000000E-19,	0.00000000F-19,	0.00000000E-19,	
-0.00000000E-19,	-0.00000000E-19,	-0.00000000E-19,	-0.00000000E-19,	-0.00000000E-19,	
0.00000000E-19,	0.00000000E-19,	0.00000000E-19,	0.00000000E-19,	0.00000000E-19,	
-0.00000000E-19,	-0.00000000E-19,	-0.00000000E-19,	-0.00000000E-19,	-0.00000000E-19,	
0.00000000E-19,	0.00000000E-19,	0.00000000E-19,	0.00000000E-19,	0.00000000E-19,	
-0.00000000E-19,	-0.00000000E-19,	-0.00000000E-19,	-0.00000000E-19,	-0.00000000F-19,	
0.00000000E-38,	0.00000000E-38,	0.00000000E-38,	0.00000000E-38,	0.00000000E-38

III. COMPUTATIONS

A. BLOCK DIAGRAM

The block diagram for Program 1884 is given in Figure 4.

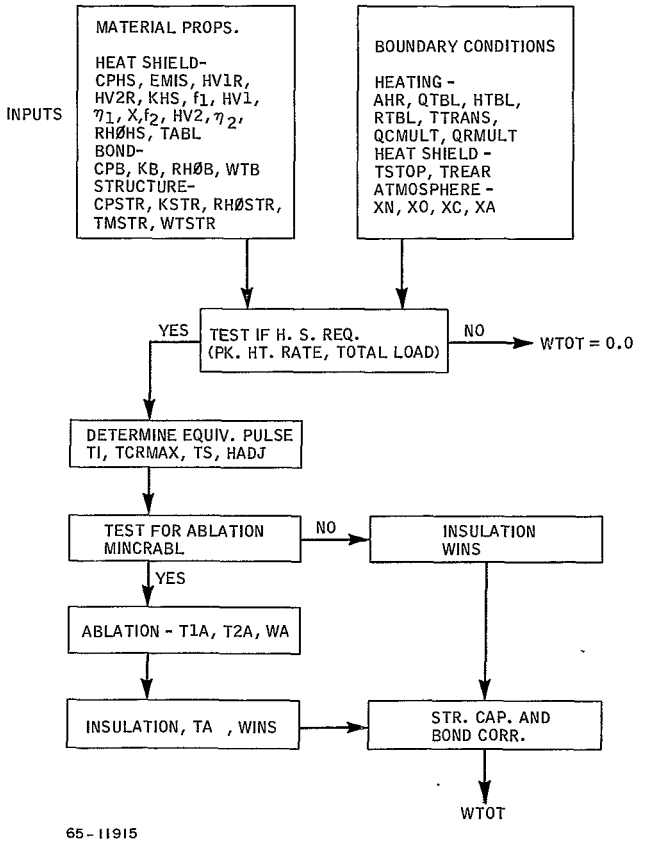

Figure 4 BLOCK DIAGRAM FOR PROGRAM 1884

374

B. SYMBOLS

Symbol	Definition	Units
C_B, C_{HS}, C_{ST}	Specific heat of bond, heat shield, and structure.	Btu/lb-°F
K_B, K_{HS}, K_{ST}	Conductivity of bond, heat shield, and structure.	Btu/ft-hr-°F
ρ_B, ρ_{HS}, ρ_{ST}	Density of bond, heat shield, and structure.	lb/ft^3
ϵ	Emissivity.	
σ	Stefan-Bolzmann constant.	Btu/ft^2-sec-°R
t_1	Initial time.	seconds
t_m	Time at peak combined heating.	seconds
t_f	Final time of problem.	seconds
t_{1a}, t_{ta}	Times when ablation starts and stops.	seconds
t_R	Time when rear temperature equals specified value.	seconds
t_{adj}	Start time for post-ablation insulation problem.	seconds
T_1	Initial temperature.	°R
T1, T2	Temperature defined by Equations (6) and (7).	°R
T_A	Ablation temperature.	°R
ΔT_m	Mean temperature rise.	°R
q_m	Maximum combined heat rate.	Btu/ft^2-sec
q_c, q_R	Convective and radiative heat rates.	Btu/ft^2-sec
H_s, h_w	Stagnation and wall enthalpy.	Btu/lb
Q_c, Q_R	Integrated convective and radiative heating.	Btu/ft^2
Q_{PA}	Total heat load for post-ablation insulation analysis.	Btu/ft^2

375

Symbols	Definition	Units
$\dot{W}_a, \dot{W}_{aR}$	Ablation rates for convection and radiation and for radiation only.	lb/ft^2-sec
W_A	Total ablated weight.	lb/ft^2

C. EQUATIONS

1. Initial Time

$$t_i = t_m - 2\int_o^{t_m} q_c\,dt + 2\int_o^{t_m} q_R\,dt \qquad (1)$$

2. Integrated Heating

$$Q_c = \int_{t_i}^{t_f} q_c\,dt \qquad (2)$$

$$Q_R = \int_{t_i}^{t_f} q_R\,dt \qquad (3)$$

3. Average Total Enthalpy

a. Nonablating Case

$$H_{SA} = \frac{1}{(t_f - t_i)}\int_{t_i}^{t_f} H_s\,dt \qquad (4)$$

b. Ablating Case

$$H_{SA} = \frac{1}{(t_f - t_{adj})}\int_{t_{adj}}^{t_f} H_s\,dt \qquad (5)$$

4. Heat Shield Requirement Tests

$$T1 = T_1 + \frac{33\, q_m \sqrt{2(t_m - t_1)}}{\sqrt{K_{ST}\, \rho_{ST}\, C_{ST}}} \tag{6}$$

$$T2 = T_1 + \frac{(Q_C + Q_R)}{W_{ST}\, C_{ST}} \tag{7}$$

5. Thermal Capacitance of Bond

$$\Delta W_{HS} = W_B \sqrt{\frac{K_{HS}\, \rho_{HS}\, C_B}{K_B\, \rho_B\, C_{HS}}} \tag{8}$$

6. Insulation Weight -- Nonablating Case

a. Test Time for Equilibration (t_R)

$$t_R = t_1 + \left\{ \frac{\sqrt{\rho_{HS} K_{HS} C_{HS} \Delta T_R^2 + 4\epsilon\sigma T_R^4 \left[Q_c \left(1 - \frac{h_w}{H_{SA}} \right) + Q_R \right]}}{2\epsilon\sigma T_R^4} - \frac{\Delta T_R \sqrt{\rho_{HS} K_{HS} C_{HS}}}{2\epsilon\sigma T_R^4} \right\} \tag{9}$$

b. Weight for $t_R \leq t_f$

$$W_{HS} = \sqrt{\frac{\rho_{HS} K_{HS}}{C_{HS}}}\ \sqrt{t_R - t_1} \tag{10}$$

c. Weight for $t_R > t_f$

$$Q_C \left[1 - \frac{h_w}{H_{SA}} \right] + Q_R - \epsilon\sigma T_w^4 \,(t_f - t_1) = W_{HS}\, C_{HS}\, \Delta T_M \tag{11}$$

Where $\Delta T_M/\Delta T_W$ and $\Delta T_R/\Delta T_W$ are assumed to be a function of $\left(\frac{\rho_{HS} K_{HS} (t_f - t_1)}{C_{HS} W_{HS}^2} \right)$ in accordance with the constant surface temperature model and the solution given in Reference 3. The solution is found via iteration on (T_W) using the relationships for $\Delta T_m/\Delta T_W$ and $\Delta T_R/\Delta T_W$ developed in Reference 3.

7. Ablation Weight

a. Test for Occurrence of Ablation

$$q_c \left(1 - \frac{h_w}{H_S}\right) + q_R > 1.82 \sqrt{\frac{\rho_{HS} K_{HS} C_{HS}}{2(t_m - t_i)}} + \epsilon \sigma T_A^4 \qquad (12)$$

b. Ablation Rate ($\dot{w}_a$)

1) Convective and Radiation Heating

$$\dot{W}_a = \frac{q_c \left[1 - \frac{h_w}{H_s}\right] + q_R - \sigma \epsilon T_A^4}{C_{HS} \Delta T_A + X f_1 [H_{V1} + \eta_1 (H_S - h_w)] + (1 - X) f_2 [H_{V2} + \eta_2 (H_S - h_w)]} \qquad (13)$$

c. Test for Blockage of all Convective Heating

$$\dot{W}_{aR} \{\eta_1 (H_s - h_w) X f_1 + \eta_2 (H_s - h_w)\} > \qquad (14)$$

$$q_c \left[1 - \frac{h_w}{H_s}\right]$$

$$\dot{W}_{aR} = \frac{q_R - \epsilon \sigma T_A^4}{C_{HS} \Delta T_A + X f_1 H_{V1R} + (1 - X) f_2 H_{V2R}} \qquad (15)$$

If Equation (14) is satisfied, then ablation rate calculation switches from Equations (13) to (15).

d. Start and Stop of Ablation

Ablation starts and stops when:

$$q_c \left(1 - \frac{h_w}{H_s}\right) + q_R = \epsilon \sigma T_A^4 \qquad (16)$$

e. Insulation Weight for Ablation Period

$$W_{INA} = \frac{4(t_{fa} - t_{ia})}{\dot{W}_a} \left(\frac{\rho_{HS} K_{HS}}{C_{HS}}\right) \qquad (17)$$

378

f. Adjusted Time

$$t_{adj} = t_{fa} - \frac{4}{5}\left(\frac{\rho_{NS} K_{HS}}{C_{HS}}\right)\left(\frac{t_{fa} - t_{ia}}{W_A}\right)^2 \qquad (18)$$

g. Post-Ablation Heat Stored

$$Q_{PA} = \int_{t_{adj}}^{t_f} \left[q_c \left(1 - \frac{h_w}{H_S}\right) + q_R \right] dt - Q_A \qquad (19)$$

where Q_A is the heat absorbed and blocked by the ablation process, which is found by consideration of Equations (13) and (14).

h. Post-Ablation Insulation Weight

$$Q_{PA} - \epsilon \sigma T_w^4 (t_f - t_{adj}) = W_{INP} C_{HS} \Delta T_m \qquad (20)$$

Solve Equation (20) for W_{INP} as described previously for Equation (11).

8. Structural Capacitance

A table lookup uses the solution for the rear temperature response in a finite slab backed by a capacitive structure whose surface is at a constant temperature and whose backface is insulated.[3] The temperature ratio $(\Delta T_R / \Delta T_w)$ is assumed unchanged by the structure.

9. Wall Enthalpy

The wall enthalpy is given by:

$$\frac{h_w M}{RT_o} = A T_w + B T_w^2 \qquad (21)$$

The coefficients A and B are computed automatically by specifying the atmospheric composition and utilizing tabular thermochemical data stored in the program. All modules are assumed to have zero enthalpy at 0°K.

IV. IBM ROUTINES

A. PROGRAM FLOW

The program flow is shown in Figure 5.

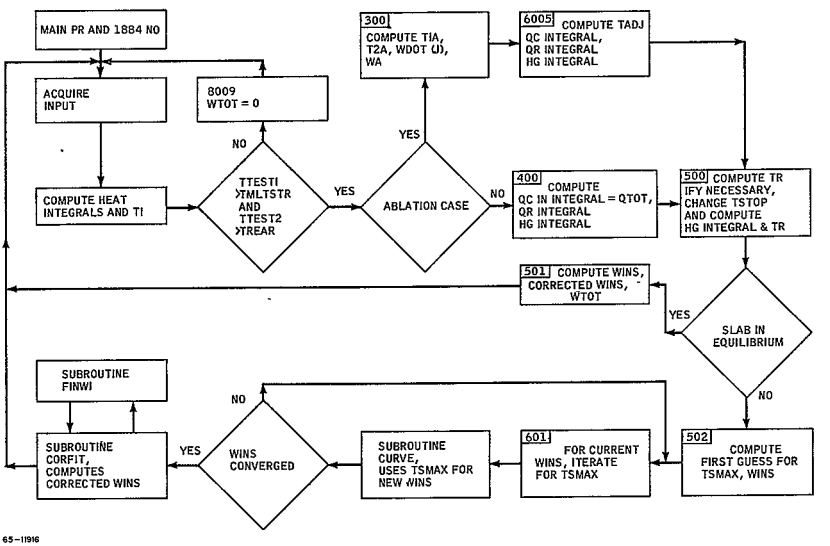

Figure 5 FLOW DIAGRAM FOR PROGRAM 1884

380

B. MAIN PROGRAM

1. Purpose

The purpose of the main program is to acquire the necessary input data, and to transmit this data to subroutine PR1884 within which the computations are completed.

2. Method

The input variables are defined by their inclusion in the namelist array INPUT, and their types and dimensions specified. The data statements and the arithmetic statements setting the elements of TBL1 and TBL2 preset values are of the solution for a finite slab with one end insulated and the other at constant temperature (Reference 1, p. 244, Equation (9)). These tables are arranged so that for TBL1 add indices are monotonic increasing values of the parameter $\Delta T_R / \Delta T_W$ and even indices are monotonic increasing values of $\alpha t/L^2$ and even indices are values of $\Delta T_m / \Delta T_w$.

The program input is read through namelist at Statement 100. The identification numbers DATE, MEMØ, and CASE are written on the output tape followed by the namelist data. The call to Subroutine PR1884 initiates all of the calculations and output of results for the case. After this call control is transferred immediately back to Statement 1000 for consideration of the next case.

C. SUBROUTINES

CALLING SEQUENCES

PR1884	Variable Input or Output Source	AHR Input Program Input	TABL Input Program Input	TREAR Input Program Input	TEMPI Input Program Input
EMIS Input Program Input	TSTART Input Program Input	DTI Input Program Input	TBL1 Input Program Input	TBL2 Input Program Input	CP2DG(CPSTR) Input Program Input
W2DG(WTSTR) Input Program Input	XITDG(MXIT) Input Program Input	EPSDG(EPSIL) Input Program Input	FCTDG(FACTØR) Input Program Input	DDG1(TIME) Input Program Input	DDG2(QTBL) Input Program Input
DDG3(HTBL) Input Program Input	DDG4(RTBL) Input Program Input	XLAM(LAM) Input Program Input	XTURB(TURB) Input Program Input	QMULT(QCMULT) Input Program Input	ERT(QRMULT) Input Program Input
ZK1 (KHS) Input Program Input	TFCØN(TTRANS) Input Program Input	RHØ(RHØHS) Input Program Input	CP(CPHS) Input Program Input	XN Input Program Input	XØ Input Program Input
XA Input Program Input	XC Input Program Input	ZKSTR(KSTR) Input Program Input	WTB Input Program Input	CPB Input Program Input	TSTPØ(TSTØP) Input Program Input
ZKB(KB) Input Program Input	RØST(RHØSTR) Input Program Input	TMST(TMSTR) Input Program Input	RØB(RHØB) Input Program Input	HV1R Input Program Input	HV2R Input Program Input

TLUQ	Variable	ARG, value of indep. variable	TBL, table of alternate indep. and dep. vars.	ANS, result of table look-up
	Input or Output	Input	Input	Output
	Source	Calling program	Main	TLUQ

CURVE	Variable Input or Output Source	ZK, K_{HS} Input Program Input	RHO, ρ_{HS} Input Program Input	CP, C_{PHS} Input Program Input	TR, t_R Input MAIN
TSS, T_s Input MAIN	TEMPI, T_1 Input Program Input	WW, W_{INS} Input CURVE	TSTØP, t_f Input Program Input or MAIN	TI, t_1 Input MAIN	ANS Input TLUQ
ANS2 Output CURVE	TBL1 Input Program Input	TBL2 Input Program Input	DTM, Δ_{Tm} Output CURVE	TREAR Input Program Input	

CØRFIT	VARIABLE Subroutine Input or Output Source	MITDG, max iterations for corrected WINS Input Program Input	EPSDG, convergence tolerance for corrected WINS Input Program Input	FCTDG, relative change iteration for corrected WINS Input Program Input	CP1DG, C_{PHS}, Specific heat of heat shield Input Program Input
CP2DG, C_{PSTR} Specific heat of structure Input Program Input	W2DG, W_{STR}, weight of structure Input Program Input	RHØ1DG, ρ, heat shield density Input Program Input	ZK1DG, K_{HS}, heat shield thermal cond Input Program Input	TIMIDG, t_1, effective initial time Input Main	WW, W_{INS}, uncorrected heat shield weight Input Main
TSTPDG, t_f, actual TSTØP Input Main	TSRDG, T_R, max allowable rear temp Input Program Input	TSBID, T_1, initial temperature Input Program Input	TSSDG, T_s, average surface temperature Input Main	QTDURZ, duration of heat pulse Input Main	TSTTDG, t_1, initial time of problem Input Program Input
DTMZ, ΔT_m, mean temperature Input Main	WEIGHZ, corrected heat-shield weight Output CØRFIT				

FINW1	VARIABLE Subroutine Input or Output Source	R, $1/\phi$, thermal-capacitance ratio Input CØRFIT	TAU, τ, dimensionless time Input CØRFIT	DV, V_2, dimensionless temperature Output FINW1	RT, indep. var table of R Input CØRFIT
TAUT, indep var, table of τ Input CØRFIT	DVT, dep var, table of dimensionless temp Input CØRFIT				

SUBROUTINE DESCRIPTIONS

1. PR 1884

a. Purpose

The purpose of Subroutine PR 1884 is to compute the heat shield weight necessary to limit the backface temperature to some (input) design limit given a knowledge of the heating environment, and provide the necessary output from the calculation.

b. Method

Immediately following the subroutine and dimension statements is the definition of the wall enthalpy function HWALL(T), where T is some temperature in degrees F and the coefficients A27N and B27N are computed as functions of the input atmosphere.

The first executable statements initialize WTØTAL, WA, and NM, the DØ 50 loop counts the number of values entered in the TIME table (DDG1), by checking for the first zero entry beyond the first table element.

By Statement 8003, the sum of the atmosphere constituent mole fractions has been checked to see if it is = 1 ± 0.001, and by the Statement DØ 8000, the wall enthalpy coefficients A27N and B27N have been computed. The DØ 10 loop arranges the tables QTB, HTBL, and RTBL so that odd indices contain values of the TIME table, and even indices contain the corresponding values of the input convective heating, enthalpy, and radiation heating, respectively.

The tests and calculations preceding Statement 8005 redefine the value of TSTØP if necessary. The duration of the heat pulse (QTDUR) is defined as the time after maximum convective heating that the convective heating is ≤ 1 percent of the maximum heating, minus the input TSTART. If the input TSTØP minus the input TSTART is > 2·QTDUR, TSTØP is changed to = 2(QTDUR-TSTART).

Between Statements 8005 and 7331, constants are stored for use by subroutine CØRFIT, QTBL is defined (loop ending on 102) to be the convective heating time QCMULT, RADR, RADA, DELTA, and DELTR are defined, the heat shield thermal conductivity is changed for agreements in units, and the maximum combined radiative and convective heating is computed along with the time it occurred (RQCMAX and RTQMAX, respectively).

The DØ loop ending on 7332 computes three integrals by the trapezoidal method, the integrals from the first entry on the TIME table to TSTØP of the combined radiative and convective heating (QRTØT) and of the radiative heating (QRRA), and the integral from the first entry in TIME to RTQMAX (see above) of the combined radiative and convective heating (RQINT).

The DØ loop 203 computes the maximum convective heating (QCMAX) and the time when it occurred (TQMAX). DØ loop 207 computes by the trapezoidal method two integrals, the integral from the first entry of the TIME table to TSTØP of the convective heating (QTØT), and the integral from the first entry on the TIME table to TQMAX of the convective heating (QINT).

Statement 208 defines an effective initial time TI, and by Statement 6048 the enthalpy at TABL and TREAR (HWABL and HWABR), along with the output quantity MINCRABL (internally, QR) and the quantity QPIMER are computed. By Statement 8008 the quantities TTEST 1 and TTEST 2 are computed. If TTEST 1 < TMST (input as TMSTR) and TTEST 2 < TREAR, no protective shield is required and the next case is considered (RETURN). Between Statements 8011 and 7248, the quantity QTREQT is computed and selected heating integrals, and time are provided as output. After Statement 7248 T1A is defined to be TSTART, and a test is made so that if QR < RQMAX, (Reference 1, p 250, Equation (23)) the ablation case is solved (Statements 300 to, but not including, 400). Otherwise the nonablating case is computed (Statements 400 to, but not including, 500).

Statements 301 to 308 compute the times T1A and T2A which define the time interval during which ablation is occurring. This logical loop provides for successive evaluations of the quantity DIF as the independent variable. TIME is incremented by the input DTI, and T1A is defined as that time before RTQMAX that DIF passes through zero, and T2A is the time after RTQMAX that DIF passes through zero. Test 302 indicates a change of sign in the residual and hence the existence of a near root, Test 1778 assures that the value of DIF is within ±0.01 of zero. It should be noticed that if DIF > 0.01 at TSTART + DTI, then T1A is arbitrarily set equal to TSTART, and/or if DIF >

0.01 at TSTØP, T2A is arbitrarily set equal to TSTØP. For problems of this nature, the potential errors inherent are obvious.

The block of statements between 928 and 926 are executed twice, first with the control variable KKK = 1, then with KKK = 2. For KKK = 1, the DØ loop entry at 311 computes the ablation rate (WDØT(J)) as a function of time (A32A(J)) between T1A and T2A. The test before Statement 826 determines if laminar or turbulent material properties will be used to compute WDØT(J). The first row of the array FCØN when the input TTRANS (internally TFCØN) is $\leq$ TIME, the second row when TTRANS > TIME. The IF test before 3085 will modify the computation of WDØT(J) when the convective heating is "blocked". The DØ loop ending on 312 integrates WDØT(J) by the trapezoidal rule to compute the total ablation rate (WA).

The statements between 313 and 6003 initialize T_{11} and KKK for the second pass through Statements 928 and 926. This pass provides for the calculations of WDØT(J) between the times RTQMAX and T2A, which are used to compute the "adjusted" time TADJ. Again suitable properties are selected depending on whether the heating is laminar or turbulent, or the convective heating is blocked. The DØ loop ending on Statement 6004 computes the cumulative sum WA7C, which is used after Statement 6005 to compute TADJ (Reference 1, p. 253, Equation (34)). For the purposes of the structural capacitance correction, T1 is taken to be TADJ for ablating cases (after Statement 326, TIMIDG).

Between 6005 and 500, three integrals are computed for use in the insulation weight calculation. These are the enthalpy and convective heating integrals HGADJ and QINS between TADJ and TSTØP (loop ending on 326), and the radiation heating integral QRTØT1 between T2A and TSTØP. The first two integrals are computed by the trapezoidal rule, and the third by a firts-order Euler method. After 326 the average enthalpy is computed and stored in HGTØT. Output is provided as HGTØT, TI, T1A, T2A, and WA before 3026. This ends the calculations made for ablation, and the GØTØ 500 before Statement 700 transfers to the final insulation weight calculations.

The nonablation calculation is done between Statements 400 and 500. Three entegrals are computed, the first of which, QC, is simply equal to QTØT (see above), the integral of the convective heating from the first entry of the TIME table to TSTØP. In the DØ loop ending on 3325 the radiation heating integral QRTØT1 between TSTART (equal to T1A for nonablating cases) and TSTØP is computed by a first-order Euler method. The DØ loop ending on 404 computes the enthalpy integral HGTØT between the effective initial time TI and TSTØP.

After Statement 404, this enthalpy is averaged over the time range and stored in GHTØT. The nonablating calculation ends at Statement 500, where the insulation weight calculation starts for both ablating and nonablating cases.

The Statements from 500 to 132 check the validity of the average enthalpy calculation. The first restriction is that the average enthalpy times AHR $\geq$ the enthalpy at temperature TREAR. If it is not, TSTØP is arbitrarily shortened by 5 seconds, NØGØ set = 1, and the GØTØ 499 provides for reaveraging the enthalpy. More specifically, the variable NØGØ is 1 if TSTØP is decreased, 2 if TSTØP is increased, and 0 if no corrections were necessary.

If the average enthalpy is sufficiently large, then the quantity TR, the time at which the backface reaches the design limit temperatures is computed. If TSTØP has not been adjusted to recompute the average enthalpy (NØGØ = 0), and TR $\geq$ TSTØP-TI, then the slab has not equilibrated and the transfer to Statement 502 begins the insulation weight computation. If TR<TSTØP-TI, NØGØ is set to 1 and TSTØP is decreased by 5 seconds and the average enthalpy is recomputed (GØTØ499) and the tests start again.

If the average enthalpy is sufficiently large but TSTØP has been decreased immediately before (NØGØ = 1), then TR is again compared to TSTØP-TI; if <, NØGØ is set to 1, TSTØP is decreased, and a new average enthalpy computed; if =, then the slab is in equilibrium and the transfer to 501 starts the insulation weight calculation; if >, NØGØ is set to 2, TSTØP is increased by 1 second, and a new average enthalpy is computed. Resetting the counter NM assures that TSTØP cannot be thus increased more than 40 times.

If the average enthalpy is sufficiently large but TSTØP has been increased immediately before (NØGØ = 2), then TR is compared to TSTØP-TI. If the slab is in equilibrium, the transfer to 501 starts the insulation weight calculation. If >, NØGØ is set to 2, TSTART is increased by 1 second and if NM< 40, a new average enthalpy is computed.

The calculation of the insulation weight is done in two ways, depending on whether the slab has equilibrated by the end of the problem. If so, then this fact is indicated and the statements from 501 to (not including) 502 compute the insulation weight (WT), corrected insulation weight (WEIGHT) and total weight (WTØTAL) from algebraic evaluations involving only input and TR. Output is provided (after Statement 8015) and the next case is considered (RETURN before Statement 502).

When the slab has not equilibrated at the end of the problem, the insulation weight is computed between Statement 502 and the end of the program. There are two iterations necessary to compute the insulation weight. The outer iteration is for the weight (W9). Statements 600 to, but not including, 6605, and inner iteration is for the average surface temperature TSS from Statements 601 to, but not including 603. The statements from 502 to 600 define the first iteration coefficients for the function of TSS whose root is computed by an accelerated Newton-Raphson procedure in the temperature iteration loop. The first guess for weight is 0, and the first guess for the temperature is a maximum value (TSR) from Reference 1, p. 245, Equation (13). The temperature iteration starts at 601. If the temperature converges to within 1 degree R in less than 41 iterations (counted by INØT), and is > 460, subroutine CURVE is called at Statement 6606. CURVE uses the converged temperature to compute an insulation weight WW from the tables of the solution to the constant surface temperature problem, TBL1 and TBL2. If this weight WW converges with a relative error less than 0.0001 to the weight computed in the previous iteration (W9), then the iteration stops. If not, then a successive approximation is done if the number of iterations (counted by III) is < 20. If more than 20, the iterative procedure is terminated and the last values of TSS and W9 are used.

Statement 703 follows the iteration for insulation weight. The call CØRFIT statement provides Subroutine CØRFIT with the necessary information to compute the insulation weight (WEIGHT), corrected for structural capacitance. After the return from CØRFIT, the insulation weight (WEIGHT) is further corrected for the effective thermal resistance of the bond, and the total weight is computed. Before 8007, output is provided including the insulation weight (W9), the corrected insulation weight (WEIGHT, ≥ 0), and the total weight (WTØTAL). The RETURN provides for the consideration of the next case.

2. TLUQ

a. Purpose

TLUQ performs a linear interpolation on the tables in 1884 TBL1, TBL2, QTBL, HTBL, and RTBL.

b. Method

The value of the independent variable is ARG, and both dependent and independent variable tables are contained in TBL, the odd indexes referring to independent variable values and the even indexes to the corresponding values of the dependent variable. The result of the linear interpolation is placed in ANS. TLUQ is used instead of ARTLU, only because of the arrangement of the Tables TBL1, TBL2, QTBL, HTBL, and RTBL.

3. CURVE

a. Purpose

CURVE uses input data and tables plus a value of the average surface temperature to compute the insulation weight.

b. Method

Given input constants and the tables TBL1 and TBL2, CURVE first defines DTRTS, and performs a table look-up in TBL1 to obtain a value of $\alpha t/L^2$, which is stored in ANS. This value is then used to compute the insulation weight WW and is used as the value of the independent variable in the table look-up in TBL2 to define a value of $\Delta T_m/\Delta T_S$. This quantity is stored in ANS 2, and is used to compute the average temperature rise DTM.

4. CØRFIT

a. Purpose

For the case in which the slab has not equilibrated by the end of the problem. CØRFIT is used to compute the insulation weight corrected for structural capacitance (see Reference 1, p.p. 254, 255, and the first two lines of p. 256).

b. Method

CØRFIT first defines DVT as a two-dimensional dependent variable table, the function of Reference 1, p. 255. The independent variable tables are TAUT (τ of Reference 1), and RT ($1/\phi$ of References 1). By statement 30 these tables have been defined, along with the necessary input to CØRFIT for the calculation. By Statement 2, a value of t_f (TLIL) is defined for computing τ . TLIL is first defined as the actual TSTØP used by the main program minus the effective initial time for the calculation (the output TI for nonablating cases, TADJ for ablating cases). If the actual TSTØP minus the input TSTART is greater than twice the duration of the heat pulse (see MAIN program description). TLIL is redefined (Statement 1) to be twice the duration of the heat pulse minus the effective initial time.

The solution for W1 must be an iterative procedure since τ and $1/\phi$ depend on W1. The procedure used here is a method of false position, with WI for the first guess corresponding to the largest value of τ in the tables (10), as defined by Statement 3. Immediately before Statement 3, the reference temperature difference ratio is defined as DTREF.

389

Having selected a W1, τ and $1/\phi$ are computed (TAU and R), their values checked to see if they are inside the range of TAUT and RT, and the subroutine FINW1 provides the temperature difference ratio (DV) corresponding to TAU and R. This value of DV is compared to DT REF (before Statement 9), and if the relative error is less than the input EPSIL, the iteration procedure is terminated. If greater than EPSIL, W1 is decreased by the input quantity FCT (FACTØR externally) and a new DV computed by going to Statement 4, etc. This continues until a change of sign in the residual indicates a near root (Statement 12), at which time W1 is reset, but FCT is reduced by multiplying by 0.3 (Statement 13). This process continues until convergence is reached, or until the number of iterations exceeds the input MIT (MXIT externally).

Errors are checked for by the program by four successive IF tests ending at Statement 7. If W1 is negative, a message is printed in the output and the corrected weight (WEIGHT) is not computed. If W1 is too large (TAU lower than first entry of TAUT, the upper limit for W1 is tried. If the sign of the residual has not changed, the quantity WEIGHT is not computed, and a message is written. If W1 is too small (TAU larger than the last entry of TAUT), the lower bound for W1 is tried to see if the sign of the residual has changed. If there is a root, the iteration continues. If not, the corrected insulation weight is computed at Statement 14 (Reference 1, p. 257, Equation (41)). An additional error noted occurs when no convergence has occurred before MIT iterations (counted by IT), in which case this fact is noted and no WEIGHT is computed. The weight corrected for structural capacitance must be ≥ 0.

5. FINW1

a. Purpose

Given in tabular form the function of Reference 1, p. 255, FINW1 computes the temperature difference ratio (DV) given values of TAU and R as independent variables.

b. Method

FINW1 performs a two-dimensional table look-up using the independent variable table DVT whose rows correspond to the independent variable array TAUT and whose columns correspond to the independent variable arrat RT. Using the value of TAU, two table look-ups are done, the first for the entry in RT$\leq$ R, the second for the first entry in RT$>$ R. The results are interpolated linearly in R to compute DV. If R=RT(1), only one table look-up is performed.

D. SIGNIFICANT EQUATIONS

1. MAIN Program

$h(T) = HWALLF(T) = A27N\,(T+460.) + B27N\,(T+460)^2$

$$RADR = EMIS.\left(\frac{TREAR + 460}{1203.9}\right)^4$$

$$RADA = EMIS.\left(\frac{TABL + 460.}{1203.9}\right)^4$$

$K = ZK1/3600.$

$q_{max} = RQCMAX = \underset{time}{Max}\,(ERT \cdot QR_t + QC_t \cdot QCMULT)$ (QR & QC from RTBL & QTBL) (Statement 7330)

$t_{q_{max}} = RTQMAX$ = time RQCMAX occurs (Statement 7330)

$$QRTOT = \int_{TIME(1)}^{TSTOP} (QR_t + QC_t \cdot QCMULT)dt$$

, QR from RTBL input (Statement 7335)
QC from QTBL input

$$QRTOT = QRRA = \int_{TIME(1)}^{TSTOP} (QR_t \cdot ERT)\,dt$$

QR from RTBL input (Statement 7335)

$$RQINT = \int_{TIME(1)}^{RTQMAX} (QR_t \cdot ERT + QC_t \cdot QCMULT)dt$$

QR from RTBL
QC from QTBL
(Statement 7335)

$QCMAX = MAX\,(QC_t \cdot QCMULT)$

TQMAX = time QCMAX occurs.

$$QT\emptyset T = \int_{TIME\,(1)}^{TST\emptyset P} (QC_t \cdot QCMULT)dt \quad QC \text{ from QTBL (Statement 207)}$$

$$QINT = \int_{TIME\,(1)}^{TQMAX} (QC \cdot QCMULT)dt, \quad QC \text{ from QTBL input (Statement 205)}$$

$$t_i = TI = RTQMAX - \frac{2 \cdot RQINT}{RQCMAX} \qquad \text{(Statement 208)}$$

HWABL = HWALLF (TABL) - enthalpy

HWABR = HWALLF (TREAR) - enthalpy

$$QR = \frac{1.82 \left\{ \frac{ZK \cdot RH\emptyset \cdot CP}{2(TQMAX - TI)} \right\}^{1/2} (TABL - TEMPI) + RADA}{(AHR - \frac{HWABL}{HGMAX})}$$

HGMAX = enthalpy from HTBL at time TQMAX (Statement 6048)

$$TTEST1 = TEMPI + 33 \cdot RQCMAX \left\{ \frac{2\,(RTQMAX - TI)}{ZKSTR \cdot R\emptyset ST \cdot CP2DG} \right\}^{1/2}$$

$$TTEST2 = TEMPI + \frac{(QT\emptyset T + QRRA)}{(W2DG \cdot CP2DG)} \qquad \text{(Statement 8003)}$$

$$QTREQT = W2DG \cdot CP2DG\,(TREAR - TEMPI)$$

If QR (above) <RQCMAX, ablation; ≥, nonablation

Ablation equations

TIA = Time before RTQMAX that

$$\left| QCMULT \cdot QC_t \left\{ AHR - \frac{HWABL}{HG_t} \right\} + ERT \cdot RC_t - RADA \right| \leq 0.01 \quad \text{(State-ment 307)}$$

where QC_t, HG_t, RC_t are from the tables QTBL, HTBL, RTBL
If such a time is not found, T1A = TSTART

t_{fa} = T2A = time after RTQMAX that the relation for T1A holds,
If such a time is not found, T2A = TSTOP

$$\dot{W}_a = WD\emptyset T_t = \frac{(QCMULT \cdot QC_t(AHR - \frac{HWABL}{HG_t}) + ERT \cdot RC_t - RADA)}{CP\ (TABL - TEMPI) + FCRD}$$

when $WD\emptyset T_t \cdot WSA \leq QC_t \cdot QCMULT\ (AHR - \frac{HWABL}{HG_t})$

$$\dot{W}_a = WD\emptyset T_t = \frac{(ERT \cdot RC_t - RADA}{CP \cdot (TABL - TEMPI)} + DEN\emptyset M$$ when the above is not true.

QC_t, HG_t, and RC_t are from tables QTBL, HTBL, and RTBL at time t.

When TFCON $\leq$ TIME, FCRD in above equation is

$$TURB(4) \cdot TURB(1) \left[TURB(2)+TURB(3) \cdot (HG_t - HWABL) \cdot 33.86\right] + \left[1 - TURB(4)\right] TURB(5) \left[TURB(6)+TURB(7)(HG_t - HWABL) \cdot 33.86\right]$$

when TFCON >TIME, FC$\emptyset$N is the same but TURB (1-7) is replaced by LAM (1-7). TURB and LAM are input tables, which are stored as the first and second rows of the matrix FC$\emptyset$N (i, j)

When TFC$\emptyset$N $\leq$ TIME,

$$DEN\emptyset M = TURB(4) \cdot TURB(1) \cdot HV1R + \left[1 - TURB(4)\right] TURB(5) \cdot HV2R$$

When TFCON > TIME, TURB(i), alone are replaced by LAM(1)

When TFCON $\leq$ TIME

$$WSA = \left\{TURB(4) \cdot TURB(1) \cdot TURB(3) + \left[1 - TURB(4)\right] \cdot TURB(5) \cdot TURB(7)\right\} \times (HG_t - HWABL) \cdot 33.86$$

when TFCØN>TIME, TURB (i) above are replaced by LAM(i)

$$W_a = WA = \int_{T1A}^{T2A} WD\emptyset T\ (t)\ dt \qquad \text{(Statement 312)}$$

t_{adj} = TADJ requires the computation of the above WDØT(j) over the time interval from RTQMAX to T2A, DØ loop ending at 6003. Each increment to the WA integral over this time is computed (WA7), and if its squared inverse is individually larger than the quantity

$C_P\ (T2A-TI)\ /(.8 \cdot RH\emptyset \cdot ZK \cdot DT^2)$, DT being the true time increment

the sum WA7C is incremented by the inverse of the above expression. If the integral increment's squared inverse is $\leq$ the above expression, WA7C, is not incremented, (loop ending 6004)

$$t_{adj} = TADJ = T2A - \frac{0.8 \cdot ZK \cdot RH\emptyset \cdot DT^2 \cdot WA7C}{CP \cdot ZN}$$, where ZN = the number

of points (separated by DT time increments) between T2A and RTQMAX.

$$QC = \int_{TIME\,(1)}^{TST\emptyset P} QDI1_t\ dt \qquad \text{(Statement 326)}$$

where QDI1 = QCMULT$\cdot QC_t$-QQQ, QC_t from input table QTBL.

$$QQQ = \begin{cases} 0, & t \leq T1A,\ t \leq T2A \\ QCMULT \cdot QC_t \left[AHR - \frac{HWABL}{HG}\right] - RADA, & T1A < t < T2A \end{cases}$$

HG_t and QC_t from input HTBL and QTBL at time t. (Statement 325)

$$HGT\emptyset T = \frac{\int_{TADJ}^{TSTOP} HG_t\ dt}{(TST\emptyset P - TADJ)}, \quad HG_t \text{ from HTBL at time t}$$

$$QRT\emptyset T1 = \int_{T2A}^{TST\emptyset P} RC_t \, dt, \quad RC_t \text{ from input RTBL (Statement 6373)}$$

This ends the ablation calculation. The nonablation equations are as follow:

$$QRT\emptyset T1 = \int_{TSTART}^{TST\emptyset P} RC_t \, dt, \quad RC_t \text{ from input RTBL (Statement 3329)}$$

$QC = QT\emptyset T$ (see above)

$$HGT\emptyset T = \frac{\int_{TI}^{TST\emptyset P - TI} HG_t \, dt}{(TST\emptyset P - TI)}, \quad HG_t \text{ from HTBL at time t (Statement 404)}$$

This ends the nonablation section. For the calculation of TR between Statements 500 and 594, see main program write-up.

$$t_R = TR = \left\{ \left[ZK \cdot RH\emptyset \cdot CP \right]^{1/2} (TREAR - TEMPI) - \left[Zk \cdot RH\emptyset \cdot CP \cdot (TREAR - TEMPI)^2 + 4. RADR \left(QC(AHR - \frac{HREAR}{HGT\emptyset T} \right) \cdot ERT \cdot QRT\emptyset T1) \right]^{1/2} \right\} \Big/ (2 \cdot RADR) \quad \text{(Statement 599)}$$

If the slab is equilibrated at the end of the problem,

$$WINS = WT = \left[\frac{RH\emptyset \cdot Zk \cdot TR}{CP} \right]^{1/2} \quad \text{(Statement 501)}$$

$$\text{Corrected WINS} = WEIGHT = WT. \left\{ 1 - \frac{(W2DG \cdot CP2DG + WTB \cdot CPB}{WT \cdot CP} \right\}, \geq$$

WTØT = WTØTAL = WEIGHT + WA + WTB

If the slab is not equilibrated at the end of the problem, the weight is found as follows TSMAX = T S R , computed from an accelerated Newton-Raphson iteration for the polynomial $f(t) = A \cdot TSR + B \cdot TSR^2 + C \cdot TSR + D$, where the coefficients are a function of the current (iterated) insulation weight. (Statements 601 to 603)

WINS = WW-computed by subroutine CURVE based on value of TSS during current iteration for insulation weight (Statements 600 to 6604).

Corrected WINS = WEIGHT (computed from CØRFIT subroutine)-

$$WTB\left[\frac{ZK1 \cdot RH\emptyset/CP}{ZKB \cdot R\emptyset B/CPB}\right]^{1/2}$$

WTØT = WTØTAL = WEIGHT + WA + WTB.

2. Subroutine CURVE

$$\frac{\Delta T_R}{\Delta T_S} = \frac{(TREAR - TEMPI)}{(TSS - 460 - TEMPI)} \quad , \text{ TSS from main program iteration}$$

A table look up (TLUQ) produces a value of $\alpha t/L^2$ from TBL1, and

the weight is

$$WW = \left[\frac{Zk \cdot RH\emptyset \cdot (TST\emptyset P - TI)}{Cp \quad (\alpha t/L^2)_T}\right]^{1/2} , -\left(\frac{-\alpha t}{L^2}\right)_T \quad \text{from table look-up.}$$

$$DTM = DTM = \left(\frac{\Delta T_m}{\Delta T_S}\right)_{\alpha t/L^2} (TSS - 460 - TEMPI) ,$$

$$\left(\frac{\Delta T_m}{\Delta T_S}\right)_{\alpha t/L^2} \text{ from TLUQ look-up at current } \alpha t/L^2$$

3. Subroutine TLUQ

No significant equations (linear interpolation table look-up).

4. Subroutine CØRFIT

DTREF = (TSR - TSI) / (TSS-TSI)

TSR = input TREAR, TSI = input TEMPI,

TSS = output TSMAX

$$TLIL = TST\emptyset P - TI, \quad TST\emptyset P - TSTART \leq 2 \cdot QTDUR$$

$$= 2 \cdot QTDUR - TI, \quad TST\emptyset P - TSTART > 2 \cdot QTDUR$$

QTDUR is computed in the main program as the time after peak convective heating that $QC_t \leq .01 \cdot QC_{max}$, minus $\overline{TSTART}$.

$$CONTAU = (RH\emptyset \cdot ZK1 \cdot TLIL)/(CP \cdot 3600).$$

$$C\emptyset NR = (W2 \cdot CP2)/CP1$$

$$TAU = C\emptyset NTAU / (W1)^2$$

$$R = C\emptyset NR / W1$$

A method of false position is used with W1 changing TAU and R computed, and a table look-up done in FINW1 to obtain a temperature difference ratio, W1 changing until this ratio is sufficiently close to DTREF. At that time the corrected insulation weight is set equal to W1.

If TAU > 10., WEIGHT is computed as

$$\text{Weight} = WW \left(1 - \frac{W2 \cdot CP2 \cdot (TSR-TSI)}{WW \cdot CP1 \cdot DTM}\right), \quad W2, CP2 \text{ being the structure}$$

weight and specific heat; TSR, TSI as above, DTM the average temperature rise, WW and CP1 the heat shield uncorrected weight and specific heat.

5. Subroutine FINW1

No equations, two dimensional table look-up.

397

V. REFERENCES

1. RAD, Mars-Venus Capsule Parameter Study, V. I, Introduction and Analysis, JPL Contract No. 950626, Avco/RAD, TR-64-1 (1964).

2. Brown, J.E., and F.A. Shukis, An Approximate Method for Design of Thermal Protection System, Contract AF 33(616)-7483, Avco/RAD TM-62-3 (25 January 1962).

3. Carslaw, H.S., and J.S. Jaeger, Conduction of Heat In Solids, 2nd edition, p. 282, Oxford Press, London (1959).

398

PROGRAM 1885

PRESSURE AND HEATING DISTRIBUTIONS (1885)

CONTENTS

I. Introduction 1

A. General Description 1
B. Calculation Model 6
C. Limitations 23

II. Usage 24

A. 1885A Input Definitions 24
B. 1885B Input Definitions 25
C. Input Procedures 31
D. Output Definitions 35
E. Sample Problem 38
F. Diagnostics 39

III. Computations 74

A. Block Diagram 74
B. Symbols 74
C. Equations 81

IV. IBM Routines 97

A. Program Flow 97
B. Common Storage 98
C. 1885A Subroutines 104
D. 1885B Subroutines 107
E. 1885A Main Program 122
F. 1885B Main Program 122
G. 1885A Significant Equation 124
H. 1885B Significant Equation 126

V. References 136

400

ILLUSTRATIONS

Figure	1	Functional Diagram of Program 1885	1
	2	Vehicle Shape Parameters	3
	3	Tension Shell and General Shape Parameters	4
	4	Typical Wind Axes Locations for Several Angles of Attack	7
	5	Translation and Rotation of Axes	8
	6	Oblique Shock Model	11
	7	Pressure Distribution on a Hemisphere Cylinder	15
	8	Heating Distributions on a Hemisphere Cylinder	22
	9	Mass Flow Continuity Model	22
	10	Mass Flow Distribution across the Shock Layer	34
	11	Block Diagram for Program 1885	75
	12	Program Flow	97

401<

TABLES

Table	I	Partial Table of Possible Shapes	5
	II	Velocity Gradient Correlation	13
	III	Shock Parameters for Blunt Cylinder	13
	IV	Test Criteria for Pressure Method Selection	16
	V	Newtonian-Prandtl Meyer Match Points	16
	VI	Prandtl-Meyer-Tabular Data of P/P_T	17
	VII	Shock Stand Off Distance ($\Delta s / y_T$) for Convex Bodies	17

I. INTRODUCTION

A. GENERAL DESCRIPTION

The object of this program is to compute the pressure distribution, laminar heating distribution, turbulent heating distribution, and radiative heating distribution at arbitrary angle of attack for axisymmetric bodies. The resultant distributions can be applied as multiplicative factors on the trajectory data of Program 1880, yielding the local pressure and heating histories at a point on the body. A general functional diagram of the program is given in Figure 1.

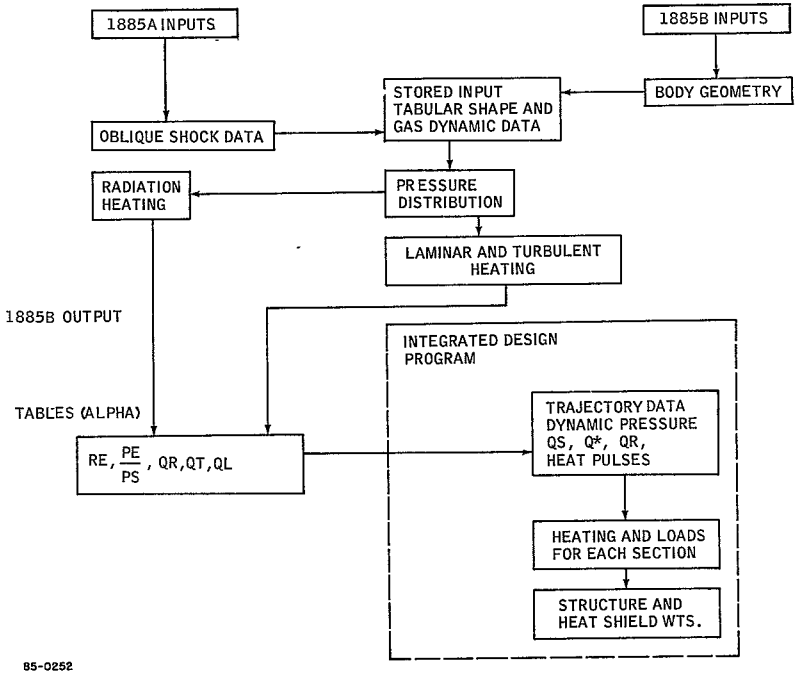

Figure 1 FUNCTIONAL DIAGRAM OF PROGRAM 1885

403

The general inputs include:

1. The pertinent shape parameters describing the vehicle geometry. The shape parameters are depicted in Figures 2 and 3 and a partial listing of parametric combinations is given in Table I.

2. The flight conditions, namely, the velocity, ambient temperature, density, and atmospheric composition

3. The angles of attack at which pressure and heating distributions desired

4. The option to consider the windward and leeward meridians as symmetric or two-dimensional bodies

5. A control on the boundary layer edge conditions by specifying the shock angle to which the total conditions correspond (temperature, pressure, etc.) adiabatic exponent γ_s is computed.

6. A control on the shock shape calculation by specifying the degree of the polynomial used to approximate the mass flow distribution across the shock layer

7. A control on the radiation heating calculation by specifying the degree of the polynomial used to approximate the radiation heating distribution across the shock layer.

The general outputs include·

1. The coordinates, surface distance, slope, and curvature of points on the windward and leeward meridians for each angle of attack (in body axes aligned with the relative wind vector, and having their origin at the stagnation point)

2. The location of the stagnation and sonic points

3. The pressure distribution as a fraction of the normal shock stagnation pressure

4. The stagnation point convective heating

5. The sonic point turbulent heating

6. The laminar and turbulent heating distributions

7. The local Reynolds number

405

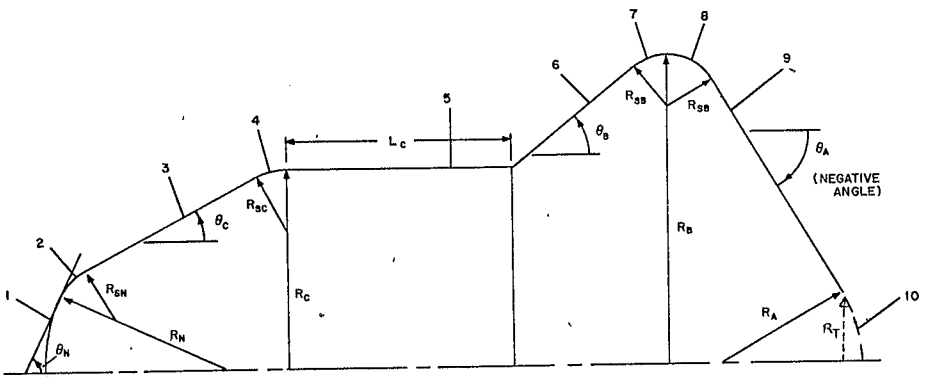

SECTION

1 NOSE SPHERE
2 R_{SN} TORUS
3 CONE (SEE FIGURE 3 FOR ADDITIONAL OPTIONS)
4 R_{SC} TORUS
5 CYLINDER
6 FLARE
7 FORE R_{SB} TORUS
8 AFT R_{SB} TORUS
9 AFT CONE
10 AFT SPHERE (R_A) OR BASE (R_T)

65-11627

Figure 2 VEHICLE SHAPE PARAMETERS

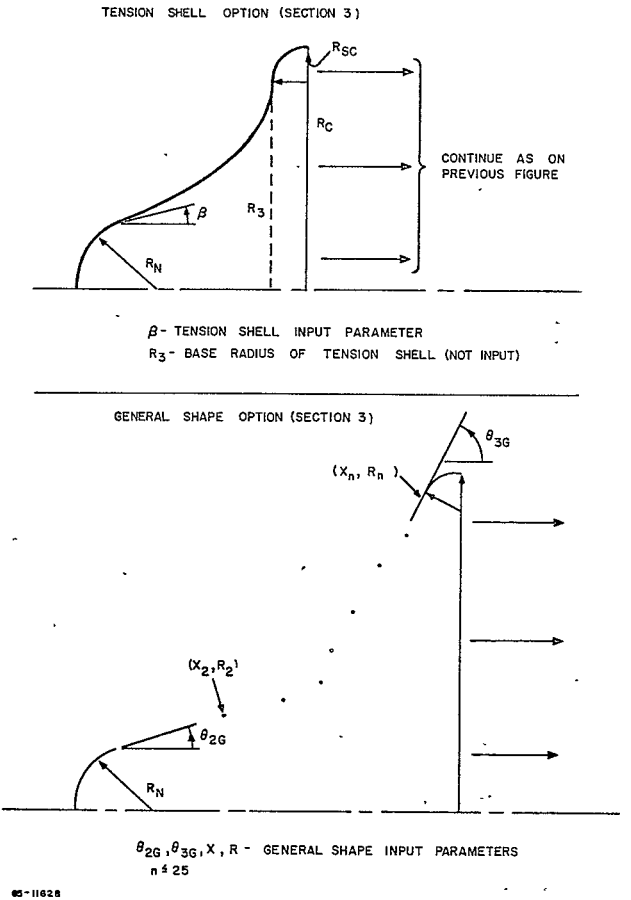

Figure 3 TENSION SHELL AND GENERAL SHAPE PARAMETERS

TABLE I

PARTIAL TABLE OF POSSIBLE SHAPES

Shape	RN	THN	RSN	THC	RC	THB	RSB	RB	THA	RA	RT	BETA	TH2G TH3G	RSC	LC
1. Sphere	x	x	x		x		x		x	x					
2. Blunt Cones,	x	x		x	x		x			x				x	
a. Mod. nose	x	x	x	x	x		x			x				x	
b. Mod. aft. body	x	x	x	x	x		x		x	x					
c. Mod. aft. body	x	x	x	x	x		x		x		x				
3. Cone Cyl., Flare	x	x		x	x	x	x	x	x	x					x
a. Mod. nose	x	x	x	x	x	x	x	x	x	x					x
b. Mod. aft. body	x	x	x	x	x	x	x	x	x		x				x
c. Mod. aft. body	x	x	x	x	x	x	x	x		x					x
4. Capsule Type	x	x	x		x		x		x	x					
a. Mod. aft. body	x	x	x	x	x		x		x		x				
b. Add. Cyl.	x	x	x		x		x		x	(x)	(x)				x
5. Tension Shell	x	x					x		x			x		x	
a. Mod. nose	x	x	x								x	x		x	
6. General Shape	x	x									x		x	x	
a. Mod. nose	x	x	x										x		
7. Sphere, Cyl., Flare	x				x	x	x	x	x	x					x
a. Mod. nose	x	x	x		x	x	x	x	x						
b. Mod. aft. body	x				x	x	x	x	x	x					
8. Sphere, Cone, Cone	x	x		x	x	x	x	x	x	x					

8. The local shock standoff distance and corresponding wave angle

9. The radiation heating distribution.

B. CALCULATION MODEL

1. Vehicle Shapes

Axisymmetric vehicle shapes are considered by prescribing a number of separate conic sections which, when mated together, form the desired shape. The sections allowed are spherical, conical, toroidal, continuous flare(or tension shell), as shown in Figures 2 and 3 A general form for the continuous flare is permitted as an option. A maximum of nine separate sections can be specified at one time. A minimum of two (a sphere) sections can be specified. Further discussion on the omission of various sections is given in the section on usage. Table I lists some of the shapes which can be studied.

2. Angle-of-Attack Geometry and Axes

The angle of attack is measured from the body axis of symmetry, and is the angle between this body axis and the relative wind vector. A new set of body axes are created at each angle of attack, lying along the wind vector and orthogonal to it; these axes are designated wind axes. Essentially, wind axes are utilized at all times, but only at $\alpha = 0,\ 180,$ does this result in an axisymmetric geometry about the relative wind vector (except for a sphere). The origin of these wind axes is taken at the stagnation point, which is assumed to be located at the most forward point on the body, measured in wind axes as shown in Figure 4. At angle of attack, therefore, there are two sets of body coordinates; one for the windward and one for the leeward meridian. The flow-field calculations are in general taken as dependent on the local body coordinates, slope, surface distance, and curvature, all measured in wind axes.

A special problem area arises when the angle of attack is such that the stagnation point occurs on a straight section (e. g. cone or cylinder), in which case the stagnation point is taken at the midpoint of the straight section. Another problem area is that of a sharp convex corner. In general, sufficient tori sections exist to preclude the occurrence of a sharp convex corner; however, when the flat base section (BASE) is specified, then a sharp convex corner can exist between the aft cone (AFTCØN) and the base (BASE).

The calculation model for the translation and rotation of the axes is shown in Figure 5. The stagnation point is located by maximizing $\bar{x}_\alpha$ where

$$\bar{x}_\alpha = y_{os} \sin\alpha - x_{os} \cos\alpha \ .$$

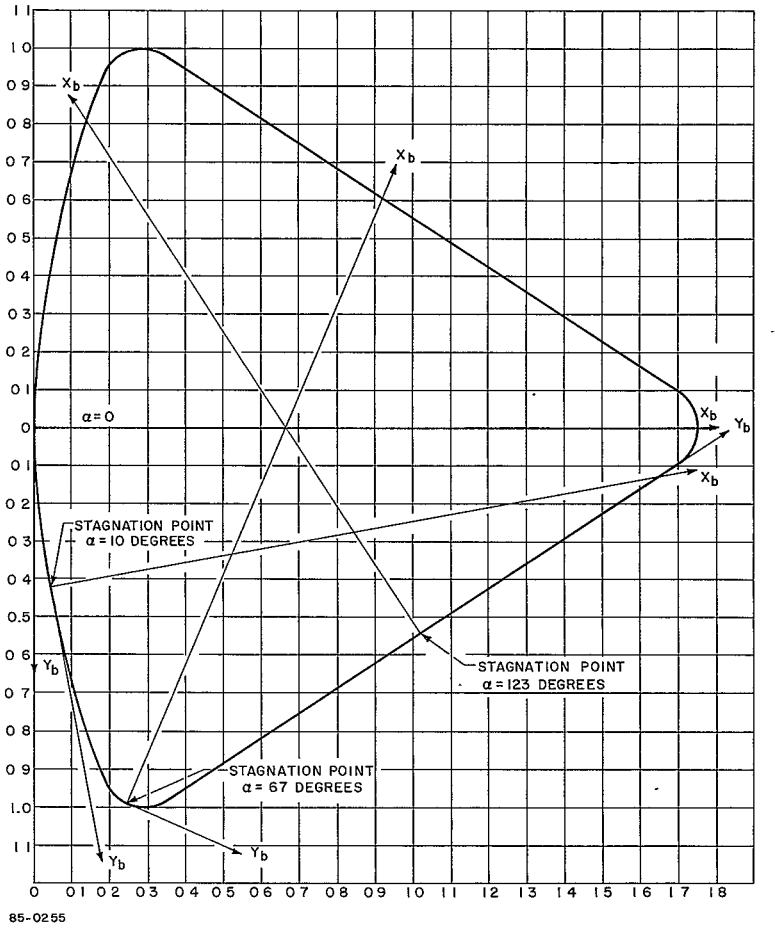

Figure 4 TYPICAL WIND AXES LOCATIONS FOR SEVERAL ANGLES OF ATTACK

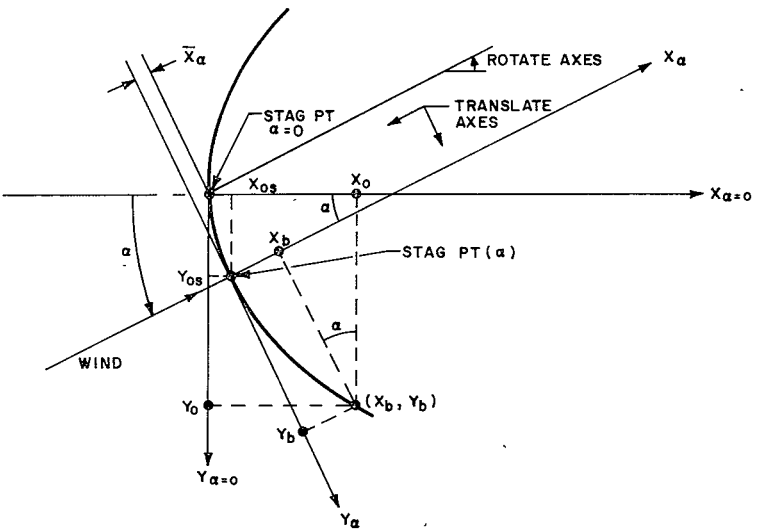

COORDINATE TRANSFORMATION EQUATIONS:

$$Y_b(\alpha) = (Y_o - Y_{os})\,COS\alpha + (X_o - X_{os})\,SIN\alpha$$

$$X_b(\alpha) = (X_o - X_{os})\,COS\alpha - (Y_o - Y_{os})\,SIN\alpha$$

85-0256

Figure 5 TRANSLATION AND ROTATION OF AXES

410

Interpolation formulas are provided for each section to determine the location of the stagnation point precisely. Each section is uniformly divided into a number of N divisions of surface distance, where N is an input number for each section. The coordinates of the N divisions are transformed for each angle of attack as shown in Figure 5. In addition, the local slope is transformed to be the slope with respect to the wind axis and the surface distance of each point is adjusted for the newly found stagnation point.

3. Sonic Point Location

The sonic point location is necessary to aid in determining the pressure distribution in the subsonic region and the stagnation point velocity gradient and shock standoff distance. The calculation model assumes that the sonic point location occurs at the smallest value of (x_b) where

$$\sin^2 \theta_b = \left(\frac{2}{\gamma_s + 1} \right)^{\frac{\gamma_s}{(\gamma_s - 1)}}$$

The sonic-point relationship given above assumes that the local slope where the flow first becomes sonic is given by Newtonian theory. The adiabatic exponent (γ_s) may either be an input value or is calculated within the program, as discussed in the following section. The precise (x_b, y_b) coordinates corresponding to the sonic point angle are interpolated.

4. Adiabatic Exponent(γ_s)

An adiabatic exponent (γ_s) is utilized based on the density ratio across a normal shock at the specified flight conditions using the strong shock approximation:

$$\gamma_s = \frac{\rho_w/\rho_a + 1}{\rho_w/\rho_a - 1}$$

The derivation of the above result from the normal shock equations is premised on the thermodynamic relationship that

$$h = \frac{\gamma_s}{(\gamma_s - 1)} \frac{P}{\rho}$$

Since for isentropic flow,

$$dh = -\frac{1}{\rho} dp$$

it can be seen that if (γ_s) is assumed constant along a streamline, then

$$\frac{h}{H} = \left(\frac{P}{P_s}\right)^{\frac{\gamma_s - 1}{\gamma_s}} .$$

The adiabatic exponent noted above is only an approximation for determining the speed of sound, and hence the Mach number as,

$$a^2 = \left(\frac{\partial P}{\partial \rho}\right)_{S/R} \cong \frac{\gamma_s P}{\rho}$$

and further

$$\frac{P}{P_s} = \left(\frac{\rho}{\rho_s}\right)^{\gamma_s}$$

Comparisons of the adiabatic exponents for the enthalpy-pressure and for density-pressure are given in Reference 1. A single adiabatic exponent is used freely to compute all conditions along a streamline, including the Prandtl-Meyer variable in supersonic flow.

5. Oblique Shock Calculations

The oblique shock calculation employs Program 1883 as a subroutine. The conditions behind an oblique shock are needed to perform the shock shape and radiative heating calculations. An iteration is performed using the enthalpy and pressure equation, where

$$\frac{h_w M}{R T_o} = \frac{HM}{RT_o} \left\{ 1 - \frac{V^2}{2H} \left[\left(\frac{\rho_a}{\rho_w}\right)^2 \sin^2 \theta_w + \cos^2 \theta_w \right] \right\}$$

$$\frac{P_w}{P_o} = \frac{\rho_a V^2}{P_o} \sin^2 \theta_w \left(1 - \frac{\rho_a}{\rho_w}\right) + \frac{P_a}{P_o} .$$

The calculation model is depicted in Figure 6. The flight conditions are specified; hence the molecular weight of the atmosphere (M) and the velocity (V), the ambient pressure (P_a) and density (ρ_a), and the total enthalpy (H) are all known. An initial estimate on (ρ_a / ρ_w) is made and the enthalpy and pressure computed by the equations, Program 1883 computes the density ratio (ρ_a / ρ_w) for these conditions and the enthalpy and pressure are recomputed, tested for accuracy, and further iterated if necessary.

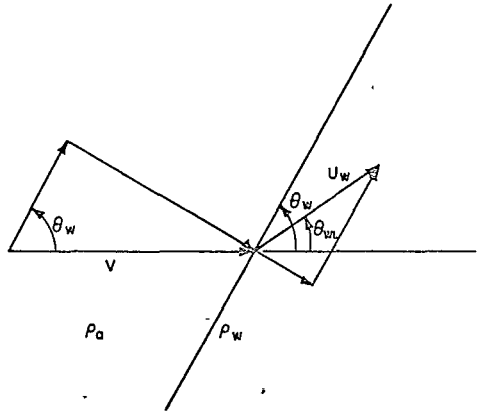

'85-0257

Figure 6 OBLIQUE SHOCK MODEL

6. Stagnation Point Velocity Gradient

The calculation of the velocity gradient on the windward and leeward meridians is performed as follows:

a. If no straight section $\left(\frac{d\theta}{dS} < 0\right)$ exists between $0 \leq S_b < S_b^*$, evaluate (du/ds) via Table II (from Reference 2), letting x_T, y_T correspond to the sonic point values.

b. If a straight section occurs between $0 < S_b < S_b^*$, and if

$$\frac{d\theta}{dS} = 0, \quad \text{at } S_b = 0$$

$$x_b^* \leq \Delta_{so}$$

then,

$$\frac{dU}{dS} = \frac{V}{R_{wo}} \sqrt{\frac{8}{3} \frac{\rho_a}{\rho_s}}$$

(Reference 4, Page 161)

Otherwise (dU/dS) is evaluated from Table II with x_T, y_T corresponding to the coordinates of meridian at the start of the straight section.

7. Subsonic Pressure Distribution $(S \leq S_b^*)$

Two pressure calculation methods are possible within the program, Newtonian or a polynomial distribution. The choice of either depends on the following tests:

a. $\begin{cases} \frac{d\theta}{dS} < 0 & \text{at all points } 0 \leq S_b < S_b^* \\ \text{and,} \\ x_b^*/y_b^* \geq \frac{1 - \sin\theta_b^*}{\cos\theta_b^*} \end{cases}$

b. $\frac{d\theta}{dS} = 0$ at one point or more $0 < S_b < S_b^*$, and

$$\frac{d\theta}{dS_b} < 0 \text{ at } S_b = 0$$

If either of the tests is satisfied, the Newtonian method is used; if not, the polynomial distribution is used. The polynomial distribution is of the form:

$$\frac{P_e}{P_s} = 1 + C_1 S_b^2 + C_2 S_b^4$$

434

TABLE II*

VELOCITY GRADIENT CORRELATION

$$\frac{y_T}{V}\frac{du}{dS}\left(\frac{\rho_a}{\rho_s}, \frac{x^*}{y^*}\right)$$

$\frac{\rho_a}{\rho_s}$	x_T/y_T					
	0	0.10	0.20	0.30	0.35	.40
0	0	0	0	0	0	0
0.005	0.004	0.007	0 014	0 035	0.050	0 110
0.01	0 008	0.015	0.025	0.060	0.090	0.150
0.02	0.016	0.022	0.050	0.100	0.140	0.195
0.04	0.032	0.052	0.087	0.150	0.195	0.255
0.08	0.070	0 098	0.145	0.225	0 278	0.324
0.16	0.143	0.183	0.238	0.325	0.380	0.455

*Obtained using the method of Reference 2

at some point where $\theta_b^* = \sin^{-1}\left(\frac{2}{\gamma_s+1}\right)^{\frac{\gamma_s}{2(\gamma_s-1)}}$.

TABLE III

SHOCK PARAMETERS FOR BLUNT CYLINDER

Δ_{so}/y_b^*	R_{wo}/y_b^*	ρ_s/ρ_a
1.20	2.40	1
0.72	3.40	3
0.60	3.75	4
0.53	4.05	5
0.47	4 30	6
0.40	4.90	8
0.36	5.25	10
0.33	5.55	12
0 28	6 20	16
0.13	9 30	50

where the coefficients C_1 and C_2 are found by the conditions

a. $S_b = S_b^*$, $\frac{P_e}{P_s} = \frac{P_e^*}{P_s}$

b. $S_b = 0$, $\frac{d^2P_e}{dS^2} = -\rho_s \left(\frac{dU}{dS}\right)^2$

8. Pressure Distributions for $S_b > S_b^*$

The pressure distribution downstream of the sonic point ($S_b > S_b^*$) is found by selecting one of several possible methods. The possible methods included in the program are:

a. Newtonian theory

b. Constant pressure

c. Entropy Layer Theory

d. Prandtl-Meyer

The choice of the method to be used at each succeeding division (or section), along the meridian is dependent on tests of curvature, slope, and pressure at the last point calculated. The test criteria are summarized in Table IV. The MP data are given in Table V.

The entropy layer theory is described in References 5 and 6 and provision is included for considering the meridian as that of an axisymmetric or two-dimensional body by input of the sentinel XJ = 1. or XJ = 0., respectively.

A limit is placed on the pressure distribution computation in that when the pressure first reaches the ambient value, then the pressure is kept constant at this value over the remainder of the body.

The Prandtl-Meyer calculation is performed via table lookup using the data in Table VI, obtained from Reference 7.

A comparison of the pressure distributions obtained via Program 1885 with experimental data for a hemisphere cylinder is shown in Figure 7.

9. Total Pressure Option

For bodies of small bluntness, an option is provided to compute the boundary layer edge conditions corresponding to flow through a specified oblique shock as discussed in Reference 9. The static pressure distribution is assumed to be unchanged. A shock wave angle other than 90 degrees is specified as input, for which the new total conditions are computed

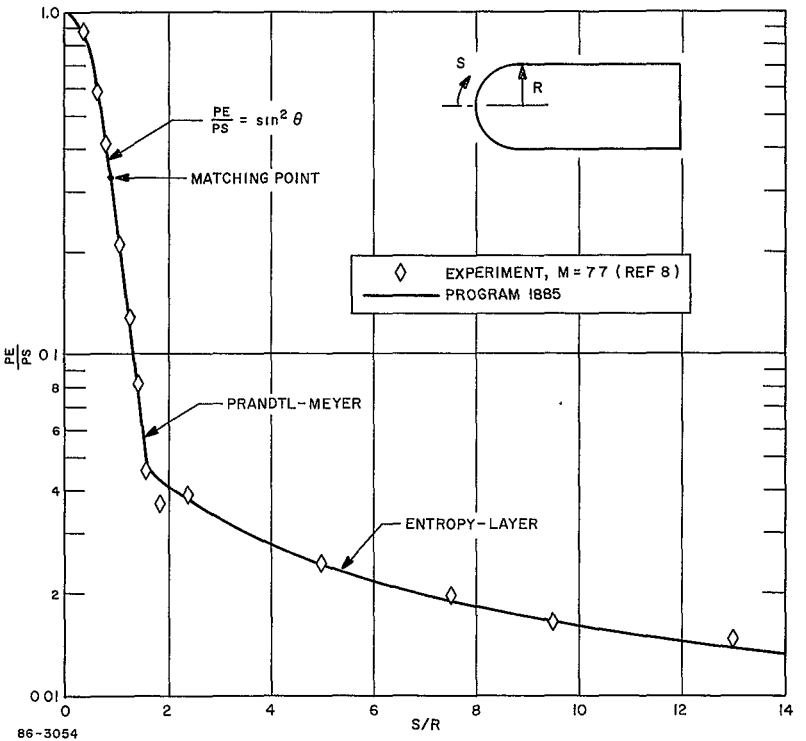

Figure 7 PRESSURE DISTRIBUTION ON A HEMISPHERE CYLINDER

TABLE IV

TEST CRITERIA FOR PRESSURE METHOD SELECTION

$\left(\frac{d\theta}{dS}\right)_{J,}$ $x_{oJ} \leq x_{o1}$ $\left(\frac{d\theta}{dS}\right)_{1,}$ $x_{oJ} > x_{o1}$	$\frac{P_e}{P_s}$	θ_b	Method
+	$\leq$MP	All	NEWT
+	>MP	All	NEWT
0	>MP	≥ 0	PC
0	$\leq$MP	≥ 0	EL
0	ALL	≤ 0	PC
-	>MP	All	NEWT
-	$\leq$MP	All	PM

TABLE V

NEWTONIAN-PRANDTL MEYER MATCH POINTS

γ_s	MP
1.15	0.4086
1.18	0.3985
1.20	0.3918
1.22	0.3854
1.24	0.3790
1.26	0.3728
1.28	0.3667
1.30	0.3607
1.40	0.3318
1.67	0.2678

TABLE VI

PRANDTL - MEYER - TABULAR DATA FOR P/P_T

ν	$\gamma = 1.15$	1.2	1.3	1.4
0	0.5744	0.5645	0.5457	0.5283
4	0.4567	0.4451	0.4230	0 4029
8	0.3867	0.3743	0.3511	0.3298
12	0.3292	0 3165	0.2927	0.2712
16	0.2801	0.2673	0.2436	0 2222
20	0.2375	0.2249	0.2016	0 1808
24	0.2006	0 1882	0 1656	0 1459
28	0.1685	0 1564	0 1352	0.1165
32	0.1406	0.1294	0 1093	0.09202
36	0.1174	0.1061	0.08747	0.07176
40	0.09606	0.08635	0.06934	0.05519
44	0.07860	0 07069	0.05433	0.04181
48	0.06381	0.05577	0.04206	0.03116
52	0.05144	0.04421	0.03214	0.02280
56	0.04114	0.03471	0.02424	0.01635
60	0 03296	0.02698	0.01800	0.01148
64	0.02565	0.02078	0 01317	0.00786
68	0.01998	0.01580	0.00946	0.00524
72	0.01543	0.01189	0.00668	0.00339
76	0.01181	0.00883	0.00462	0.00212
80	0.00894	0.00649	0.00313	0.00127
84	0.00670	0.00470	0.00207	0.00073
88	0 00497	0.00335	0.00133	0.00040
92	0.00364	0 00237	0 00083	0.00020
96	0 00264	0 00163	0 00050	0.00010
100	0.00189	0.00111	0 00029	0 00004
104	0 00134	0.00074	0.00016	0.00002
108	0.00093	0.00049	0.00009	0.0
112	0.00064	0.00031	0 00004	0 0
116	0.00044	0.00020	0.00002	0.0
120	0.00029	0.00012	0.00001	0.0

TABLE VII

SHOCK STAND OFF DISTANCE (Δ_s/y_T) FOR CONVEX BODIES

x_T/y_T →

ρ_a/ρ_s ↓	0	0.1	0.2	0.3	0 4
0.02	0.21	0.135	0.070	0 032	0.020
0 04	0.275	0.190	0.115	0.065	0.040
0.05	0.30	0 210	0 135	0.080	0.050
0.06	0.32	0.235	0 155	0 095	0.060
0 08	0 357	0.272	0.192	0 125	0 080
0.10	0.387	0 305	0 225	0.150	0.100
0.12	0.415	0.335	0 255	0 177	0.118
0.16	0.462	0 390	0.310	0.232	0.157

(P_T, ρ_T, T_T) and for which a new adiabatic exponent (γ) is found, these quantities are then used to calculate the necessary flow variables needed to compute the convective heating.

10. Stagnation Point Convective Heating

The stagnation point heating is computed using the correlations of Reference 10 for air The stagnation point velocity gradient on which the heating is based depends on what section of the body the stagnation point occurs If the stagnation point occurs on a spherical cap, then the velocity gradient, for the purposes of computing heat transfer, is taken as the average of the windward and leeward value. If the stagnation point occurs on a torus, cone, or cylinder, the velocity gradient, for the purposes of computing the heating, is taken as the average of the value found above and the value corresponding to a cylinder of radius y_{os} /sin α.

The stagnation point heating expression from Reference 10 is:

$$q_{LS} = \frac{0.76}{\sigma^{0.6}} \left(\frac{\rho_b \mu_b}{\rho_s \mu_s}\right)^{0.1} \sqrt{\rho_s \mu_s}\, \frac{H}{778} \sqrt{\left(\frac{dU}{dS}\right)} \left[1 + (L^a - 1)\frac{h_D}{H}\right]$$

The Lewis and Prandtl numbers are input as well as the exponent (a). The dissociation enthalpy (h_D) is computed in the oblique shock subroutine.

The stagnation point heating to a three dimensional stagnation point has been derived by Reshotko[11]. The result indicates that the heating can be found in a similar way as in the case of the axisymmetric stagnation point, except that the velocity gradient is given by

$$\frac{dU}{dS} = \left(\frac{dV}{dy} + \frac{dW}{dz}\right)\frac{1}{2}$$

where (dV/dy) and (dW/dz) are the gradients along the two principal radii of curvature. In axisymmetric flow the two velocity gradients are equal, whereas, in two dimensional flow, one is zero, hence, the heating to a cylinder is $\sqrt{1/2}$ of that to a sphere of the same radius.

The velocity gradient dU/dS must be singly valued for both the leeward and windward meridian When the stagnation point is on a spherical cap, the velocity gradient is approximated as·

$$\frac{dU}{dS} = \frac{1}{2}\left(\frac{dU}{dS}\right)_{\text{leeward}} + \frac{1}{2}\left(\frac{dU}{dS}\right)_{\text{windward}}$$

When the stagnation point is on a torus or straight section, the velocity gradient is approximated as

$$\frac{dU}{dS} = \frac{1}{2}\left[\frac{1}{2}\left(\frac{dU}{dS}\right)_{\text{leeward}} + \frac{1}{2}\left(\frac{dU}{dS}\right)_{\text{windward}}\right] + \frac{V}{2}\,\frac{\sin\alpha}{y_{os}}\sqrt{\frac{3\,\rho_a}{\rho_s}}$$

where the last term on the right is the velocity gradient for a cylinder (Reference 4) of radius ($y_{os} / \sin\alpha$).

11. Laminar Heating Distribution

The laminar heating equations are based on Reference 9 for air The distribution is obtained by normalizing the results with the zero angle of attack stagnation point value. An option is provided to calculate the heating along the windward and leeward meridians assuming either a two-dimensional or axisymmetric body. The calculation includes the affect of local pressure gradient using the approach of local similarity, however, unfavorable pressure gradients (e g., along a tension shell) are not accounted for, in which case the pressure gradient term is placed equal to zero.

The laminar distribution, generalized for either two-dimensional or axial symmetric flows, is given by

$$\frac{q_L}{q_{LS}} = \frac{y_b^j\,\rho_b\mu_b\,U_e\,(1 + 0.096\,\sqrt{\beta})}{(1.068)\,\sqrt{2\,\xi}\,\sqrt{2\,\rho_{bs}\mu_b\left(\frac{dU}{dS}\right)_{W,L}}}\sqrt{\frac{2}{j+1}}$$

where,

$$\xi = \int_0^S \rho_b\mu_b\,U_e\,y_b^{2j}\,dS \quad , \quad \beta = 2\,\frac{d\ln U_e}{d\ln \xi}$$

$\left(\frac{du}{dS}\right)_{W,L}$ is velocity gradient for either windward or leeward meridian.

The tabulated output references the heating to the zero angle-of-attack stagnation point values and so,

$$\frac{q_L}{(q_{LS})_{\alpha=0}} = \frac{q_L}{q_{LS}} \times \frac{q_{LS}}{(q_{LS})_{\alpha=0}}$$

12. Turbulent Heating

The turbulent heating calculation utilizes the flat plate reference enthalpy method of Reference 12. The inputs include the Prandtl number and a correction term for axial symmetry if J=1. (XJ = 1.). The output is normalized with respect to the zero angle-of-attack sonic point value.

13 Radiation Heating

The radiation heating model is based on the following equation:

$$q_R = \frac{\xi_w}{2} \left[\frac{m}{m+1} I_b + \frac{1}{m+1} I_w \right]$$

where (m) defines the radiation profile across the shock layer as

$$I = I_b + (I_w - I_b) \left(\frac{\xi}{\xi_w} \right)^m$$

and where I_b and I_w are the radiation intensities at the body and at the shock along a line normal to the body at the coordinates x_b, y_b. The exponent (m) is an input quantity The intensities are computed by the subroutine containing Program 1883. The quantities (ξ_w, θ_w) are computed from the shock shape as described in the following section. The laminar, turbulent and radiative heating distributions on a hemisphere cylinder are shown in Figure 8, as computed by Program 1885.

14. Shock Standoff Distance

The shock shape calculation uses the approach of Reference 3 to compute the shock standoff distance and the shock curvature at the stagnation point. The value of the shock standoff distance at the stagnation point depends on whether,

a. $J = 0, 1$

b. $\frac{d\theta}{dS} < 0 \ , \ 0 \leq S_b < S_b^*$

c. $x_b^* > \Delta_{so}$.

For $J = 1$, and if $\frac{d\theta}{dS} < 0$ for $0 \leq S_b < S_b^*$, then Table VII is utilized with $x_T = x_b^*$, $y_T = y_b^*$ If a straight section $\left(\frac{d\theta}{dS} = 0\right)$ occurs at any point, $0 \leq S_b < S_b^*$, and if $x_b^* \geq \Delta_{so}$, then utilize Table VII, and $x_T = x_{bb}$, $y_T = y_{bb}$ where x_{bb} and y_{bb} are the coordinates at the start of the straight section However, if $x_b^* < \Delta_{so}$, then utilize Table VII with $x_T = x_b^*$, $y_T = y_b^*$ and $\Delta_s = \Delta_{so} - x_b^*$. For $J = 0$, and if $\frac{d\theta}{dS} < 0$ between $0 \leq S_b < S_b^*$ then,

$$\Delta_s = \rho_a / \rho_s \, F \qquad \text{(Reference 4)}$$

where,

$$F = \frac{1}{\sqrt{1 - 3\frac{\rho_a}{\rho_s}}} \left[\cosh^{-1} \frac{1}{\sqrt{\frac{3\rho_a}{\rho_s}}} \right] \left(- \frac{dS}{d\theta} \right)_{S_b = 0}$$

If $\frac{d\theta}{dS} = 0$ at any point $0 \leq S_b < S_b^*$, and if $x_b^* \geq \Delta_{so}$ where,

$$\Delta_{so} = \frac{3}{2} \, y_b^* \left(\frac{\rho_a}{\rho_s} \right)^{0.25} \qquad \text{(Reference 4)}$$

evaluate Δ_s as noted above. However, if $x_b^* < \Delta_{so}$, evaluate Δ_s as noted above but with

$$\left(- \frac{dS}{d\theta} \right)_{S_b = 0} = \frac{y_{os}}{\sin \alpha}$$

15 Shock Curvature at Stagnation Point

Following an approach similar to that of Reference 3, the shock is assumed to be of constant curvature between the stagnation and sonic points. By geometry the radius of curvature is a function of the shock standoff distance at the stagnation and at the sonic points By continuity of mass flow, the standoff distance is further related to the radius of curvature and hence the shock wave is determined. The continuity is invoked by estimating the unit mass flow distribution along a normal (ξ) to the body as

$$\rho U \cos(\theta_{WL} - \theta_b) = (\rho U)_e + [\rho U_w \cos(\theta_{WL} - \theta_b) - (\rho U)_e] \left(\frac{\xi}{\xi_w} \right)^n$$

as depicted in Figure 9.

The exponent n is an input quantity. The conditions at the shock wave (sub w) are found via the oblique shock computations.

16. Shock Shape

The shock shape is assumed to have the form

$$Y_w^2 = 2 R_w (X_w + \Delta s) + B (X_w + \Delta s)^2$$

The value of R_w (the shock wave curvative at the stagnation point) is found as described in Section 15. above. The coefficient (B) is found by satisfying continuity at the first point where $\theta_b \leq 0$. The continuity check involves the input of the exponent (n) described above and the choice of the flow index j = 0, 1

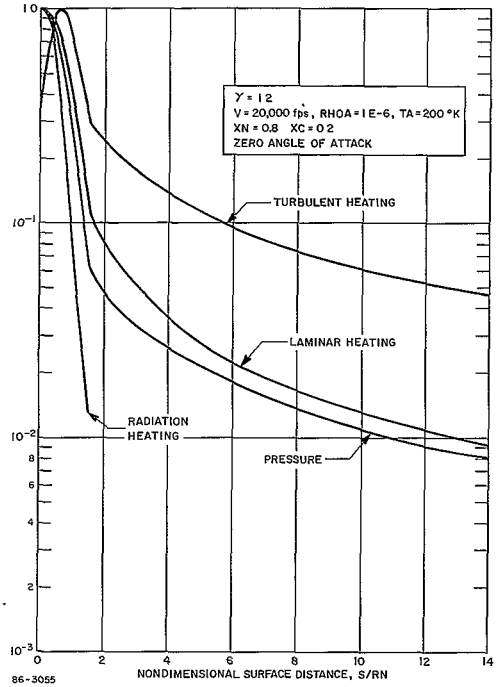

Figure 8 HEATING DISTRIBUTIONS ON A HEMISPHERE CYLINDER

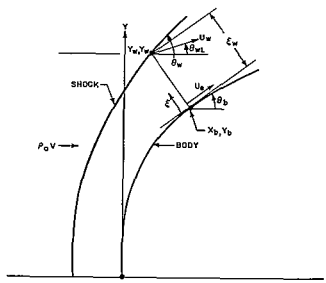

UNIT MASS FLOW DISTRIBUTION:

$$\rho U - (\rho U)_e + \left[\rho_w U_w \cos(\theta_{WL} - \theta_b) - (\rho U)_e\right]\left(\frac{\xi}{\xi_w}\right)^n$$

85-0258

Figure 9 MASS FLOW CONTINUITY MODEL

As options, the quantities Δ_s, R_w, B can be input for the windward and leeward meridians and varied for each angle of attack

C. LIMITATIONS

Program 1885 was developed primarily for determining the pressure and heating distribution for preliminary design purposes To handle the wide range of configurations and the whole range of angle of attack, within a reasonably sized and quick program, the approach selected was to utilize simple but powerful analytical techniques. The techniques in general are based on the nature of the physics of the problem and should, in general, yield useful initial predictions The limitations which can be clearly identified include:

1. Separated flow effects are not considered

Experimental results of Larson[13] for laminar and turbulent flows have shown that the average heat transfer for the separated laminar boundary layer was found to be 56 percent of that for the equivalent attached laminar boundary layer, independent of Mach number and Reynolds number in agreement with Chapman's[14] theoretical results. Average turbulent heating for the separated case was found to be about 60 percent of that for the equivalent attached boundary layer, but a trend was observed where the reduction in heat transfer increases with increasing Reynolds number.

2 Three-dimensional flow effects are not considered, except in a minor way for the stagnation point heating as the calculation models presume, in general, that the flow field is either axisymmetric or two-dimensional.

3 The convective heating distributions are based on relationships developed for air

4. The viscosity table is for nitrogen.

5. The shock shape and radiation predictions depend on a priori knowledge of (m) and (n) which are important in determining the distributions of mass flow and radiation intensity across the shock layer. These inputs can be adjusted so as to calibrate the program with more detailed numerical calculations or with experiment.

6. The effects of shock interactions on the tension, general, and flare-shaped bodies are not considered

7. Perfectly sharp nosed shapes cannot be considered.

8. Angle-of-attack conditions leading to attached shocks cannot be considered.

II. USAGE

A. 1885A INPUT DEFINITIONS

Due to the size of the program, it was necessary to divide the program into two parts, 1885A and 1885B. Program 1885A computes all the oblique shock data necessary for the heating and pressure distribution calculation. Program 1885B may be run separately provided tabular oblique shock data is input, to replace what would otherwise be computed by the 1885A Program.

The inputs for the 1885A Program are given initially.

Name	Preset Values	Symbol	Parameter	Units
CASE	0.		Identification number of the form XX.XX.	--
DATE	4.01		Identification number of the form XX.XX.	--
DELAL	2.		Calculation interval of oblique shock data.	degrees
MEMØ	0.		Identification number of the form XX.XX.	
RHØA	0.	ρ_a	Atmospheric density.	slugs/ft^3
TA	0.		Atmospheric temperature.	Kelvin
V	0.	V	Flight velocity.	ft/sec
XA	0.	X_A	Mole fraction argon.	--
XC	0.	X_C	Mole fraction carbon dioxide.	--
XN	0.	X_N	Mole fraction nitrogen.	--
XØ	0.	X_O	Mole fraction oxygen.	--
XPLAST	0.		Print out sentinel for all thermochemical data at each shock angle.	--

Name	Preset Values	Symbol	Parameter	Units
ILAST	0.		If > 0., tape 8 is rewound at the end of the case. ILAST should normally be set >0 only for the last case of a run.	--
INSTØP	1.		Radiation intensity below which the equilibrium problem is not solved.	Btu/ft^3
PRTAB	1.		If >0., will print tables of shock data.	--
PRTAPE	1.		If >0., the array TABLE and selected 1885A input are written on Tape 8 for linkage with an 1885B run.	--
XPEVER	0.		If >0., will print all thermochemical data for every iteration for each shock angle.	--

B. 1885B INPUT DEFINITIONS

Name	Preset Values	Symbol	Parameter	Units
ALPHA	0.	α	Array of angles of attack. Max number is 10, of which the first must be 0.	degrees
BETA	0.	β	Tension shell angle.	degrees
BSHØCT		B_S	10 by 2 matrix of values of the shock parameter β if the shock shape is input. The first column (1-10) corresponds to each α on the windward side, the second column (11-20) to each α on the leeward side. See DELS and RW.	--
CASE	0.		CASE number for identification, of form XXXX. 0.	--

Name	Preset Values	Symbol	Parameter	Units
CØMQRD	0.		Shock shape sentinel; if 0., no shock shape and radiation is to be computed, > 0 otherwise.	--
DATE	4.01		DATE number for identification of form X.XX	--
DELT		Δ_s	An array of at most 10 values of the shock detachment distance Δ_s, one for each α. It is to be specified if the shock shape is input. See BSHØCT and RW.	feet
DN2	0.0001		Lower limit for accuracy in integrating d(Pe/Ps)/dx by the entropy-layer formulation.	--
DTDSTB		$(d\theta/dS)_b$	Array of at most 25 values of $(d\theta/dS)_b$ for the general shape option.	rad/ft
ENTH	0.	h_A	Ambient enthalpy when shock gas dynamics data are input, rather than from 1885A. See TABLE, RHØA, XA, XC, XN, XØ, TA, V, PRES, XM, MACH, HDHS90, and TAPE.	ft^2/sec^2
GAMSØ	0.	γ_s	Value of adiabatic exponent at the stagnation point if it is different from the 1885A data, or if 1885A is not used. If = 0, 1885A or TABLE (1, 5) value is used.	--
HDHS90	0.	HD/HS	Ratio of dissociation enthalpy to stagnation enthalpy, specify when 1885A is not used.	--

Name	Preset Values	Symbol	Parameter	Units
ILAST	0.		If > 0., the tape prepared by 1885A will be rewound. It must be > 0 for the last case if 1885A data are used, and if > 0 for an intermediate 1885B case the gas dynamics data of the first 1885A case will be used, and the sequence of 1885A-1885B cases regenerated.	--
XØTBL	0.		If ≠ 1., the α = 0 body geometry data will be printed in the output.	--
LC	0.	L_C	Cylinder length.	feet
LE	0.	L	Lewis number.	--
LX	0.		Lewis number exponent.	--
MACH	0.	M	Mach number, specify if 1885A is not used.	--
MEMØ	0.		MEMØ number for identification of form X.X.	--
MM	0.	m	A 10 by 2 matrix of exponents on the radiation polynomial, specified like BSHØCT above.	--
N	0.		An array of at most 10 numbers, each of which is the number of increments to be used on the ith body section. For Section 3, i.e. N(3), XX.1, XX.2 and XX.3 are the number of increments for cone, tension shell, or general shape, respectively. For Section 10, i.e. N(10), XX.1, and XX.2 are the number of increments for spherical cap or flat base, respectively.	--

Name	Preset Values	Symbol	Parameter	Units
NALPHA	0.		Number of α's in the ALPHA array.	--
NN	0.	n	A 10 by 2 matrix of exponents on the mass flow polynomial. Specified like BSHØCT above.	--
PN	0.	σ	Prandtl number.	--
PRES	0.	P_A	Ambient pressure, specified when 1885A is not used.	lb/ft^2
RA	0.	R_A	Aft cap radius.	feet
RB	0.	R_B	Flare and aft cone base radius.	feet
RC	0.	R_C	Cylinder and cone base radius.	feet
RHØA	0.	ρ_a	Atmospheric density. Specify when 1885A is not used.	$slugs/ft^3$
RN	0.	R_N	Nose radius.	feet
RSB	0.	R_{SB}	Toroidal radius at aft cone.	feet
RSC	0.	R_{SC}	Toroidal radius at base of cone.	feet
RSN	0.	R_{SN}	Toroidal radius aft of nose.	feet
RT	0.	R_T	Base truncation radius.	feet
RTBL	0.	Y_i	Array of ordinates for general shapes, maximum 25 points.	feet
RWØ		R_W	A matrix of at most 10 by 2 numbers which are bow wave radii, specified like BSHØCT above. If any RW(i, j) for an α and windward or leeward meridian is specified ≤ 0, it is assumed that DELT, BSHØCT, and RW are to be computed by the program for use on the shock shape and radiation computations.	feet

Name	Preset Values	Symbol	Parameter	Units
TA	0.	T_a	Ambient temperature, specify if 1885A is not used.	Kelvin
TABLE			A matrix of at most 46 by 13 numbers, each of whose columns is a corresponding column from 1885A. For example, TABLE (1-46) = THW_i, TABLE (47-92) = RW/RA_1, ... TABLE (553-598) = IB_1. See 1885A output. Specify in the same order as 1885A, and only when 1885A is not used.	--
TAPE	1.		If > 0, 1885A input is read in from A2. If ≤ 0, shock gas dynamics data is assumed to be program input.	--
TB	0.		Body temperature.	Kelvin
THA	0.	θ_A	Aft cone angle.	degrees
THB	0.	θ_B	Flare angle.	degrees
THC	0.	θ_C	Fore cone angle.	degrees
THETAT	0.	θ_{TT}	Shock angle for stagnation conditions. Used only if TT ≤ 0.	degrees
THN	0.	θ_N	Nose cap angle	degrees
TH2G	0.	θ_2	Angle at first point of general shape.	degrees
TH3G	0.	θ_3	Angle at last point of general shape.	degrees

Name	Preset Values	Symbol	Parameter	Units
TTØ	0.		Total pressure sentinal. If $\leq$ 0 uses normal shock, if >0, P_T, T_T, ρ_T and γ_s come from shock gas dynamic data at THW = THETAT (above).	--
UP2	0.001		Upper limit for accuracy in integrating $\frac{d(P_e/P_s)}{d_x}$ by the entropy-layer formulation.	--
V	0.	v	Flight velocity, specify if 1885A is not used.	ft/sec
XA	0.	x_A	Mole fraction of argon in atmosphere. Specify if 1885A not used.	--
XC	0.	x_C	Mole fraction of $C\emptyset/_2$ in atmosphere. Specify if 1885A not used.	--
XJ	0.	j	A 10 by 2 matrix of flow field indixes, 1 = axisymmetric, 0 = two dimensional. Specify like BSHØCT above.	--
XM	0.	$\overline{M}$	Mean molecular weight of atmosphere, specify if 1885A is not used.	--
XN	0.	x_N	Mole fraction of N_2 in atmosphere. Specify if 1885A not used.	--
XØ	0.	x_O	Mole fraction of $\emptyset_2$ in atmosphere. Specify if 1885A not used.	--
XTBL	0.	x_i	An array of at most 25 points which are the X_i for the general shape.	feet

C. INPUT PROCEDURES

1. Vehicles Section Specification (refer to Figures 2 and 3).

The vehicle sections are identified as follows:

Section 1 -- Nose sphere - Specify N (1) followed by number of points desired, i.e., if 8 points are desired, specify N (1) = 8. Specify as input RN, THN, Section 1 cannot be omitted.

Section 2 -- Toroidal section following nose cap. If present, specify N (2) followed by number of points desired. Specify also RSN.

Section 3 -- Three options existing for Section 3, the cone, tension shell, or general shell. If, for example, 25 points are desired for any one of these, then for the cone the input would be N (3) = 25.1, and for the tension shell N (3) = 25.2, and for the general shell N (3) = 25.3. Specify THC for cone, BETA for the tension shell, and TH2G, TH3G for the general shape.

Section 4 -- Toroidal section aft of Section 3, specified as N (4) and also specify RSC, RC. For example, if 12 points are desired, specify N (4) = 12.

Section 5 -- Cylinder section, specified as N (5) and also specify LC, RC. For example, if five points are desired, specify N (5) = 5.

Section 6 -- Flare cone specified as N (6) and with RB, RSB, THB, and with number of points desired as above.

Section 7 -- Toroidal radius aft of flare cone as N (7) and with RSB and with number of points desired as above.

Section 8 -- Toroidal radius at base of aft cone as N (8) and with RSB number of points desired as above.

Section 9 -- Aft cone as N (9) and with THA, and either RA or RT and number of points desired.

Section 10 -- Base section is specified either as a spherical cap or as a flat base. A spherical cap is specified, for example, as N (10) = 8.1, where 8 is the number of points desired and RA is input. A flat base is specified similarly as N(10) = 8.2 and RT is given.

2. Stagnation Conditions Option.

An option is provided for considering stagnation conditions, other than those for a normal shock, at the edge of the boundary layer, to compute the convective heat transfer. The option is used by specifying TTØ as the desired shock angle.

3. Adiabatic Exponent Option.

An option is provided to input a value of (γ) rather than utilizing the value computed in the oblique and normal shock subroutine.

4. Straight Sections

On straight sections, an odd number (N) of points is recommended because roundoff may confuse the point count.

5. Shock Shape Parameters

Values of the coefficients (R_w) and (B) have been correlated from numerical flow solutions in Reference 15 for spherical bodies. The value of R_w was found to be given by

$$R_w = R_N\ (2.09) \left(\frac{\rho_a}{\rho_s} \right)^{0.1958} .$$

The value of B was found to be a function of (x_w) and the normal shock density ratio, however, an approximate form was found to provide good agreement when (B) was taken as a constant and equal to (-0.646).

Studies of the shock shapes about ellipsoids and blunt cones are reported in References 16 and 17, but these are directed principally at the region downstream of the nose.

Additional shock shape studies are presented in References 18 and 19. The shock shape form utilized in Reference 18 is of a slightly different form, but the numerical results presented can be used to deduce the parameter (R_w) and (B) for ellipsoidal and parabolic bodies as well as spheres.

The values of (R_w), (B_s), and (Δ_s) can be input for both the windward and leeward meridians, as a function of angle of attack. The first ten values specified correspond to the windward meridian and values (11-20) correspond to the leeward meridian.

6. Value of (NN)

The value of (NN) to be used is found via comparison of shock calculations with results of "exact" calculations and/or experiment.

Values of (NN) can be found from the results given in Reference 18 for a point slightly downstream of the sonic point for a sphere. A typical correlation of the theoretical distribution of mass flow rate across the shock layer is shown in Figure 10.

Values of NN can be input for both the windward and leeward meridians, as a function of the angle of attack. The first ten values specified correspond to the windward meridian and values (11-20) correspond to the leeward meridian.

7. Value of (MM)

The value of (MM) to be used is found via comparison of radiation predictions with more "exact" calculations and/or experimental data where available.

Values of MM can be input for both the windward and leeward meridians as a function of the angle of attack. The first ten values specified correspond to the windward meridian and values (11-20) correspond to the leeward meridian.

8. Flow Field Option

By specifying XJ as 0. or 1, the calculations consider the body as either two dimensional or axisymmetric. The values of XJ can be specified for both the windward and leeward meridians as a function of angle of attack. The first ten values specified correspond to the windward meridian and values (11-20) correspond to the leeward meridian.

9. Two-Part Program

The program consists of two parts, 1885A and 1885B as the latter portion fills the core of the IBM 7094. An option is provided to read in the data of 1885A as tables or via tape. A typical output of 1885A is shown in the following IBM listing. The tabular inputs must include the 13 listed tables as given by a typical 1885A calculation. In addition, several aerodynamic and thermodynamic variables must be input if 1885A is not used, including HDHS90, PRES, MACH, ENTH, XA, XN, XC, XØ, RHØA, V, MACH, TA.

10. Angle-of-Attack Choices

Avoid angles-of-attack choices which place stagnation point close to discontinuities in body curvature because the simplified flow model is inadequate to cope with strong 3-dimensional effects.

11. Number of Output Points (N)

Specify (N) large enough for each section such that first (5) points on each side of stagnation point occur on the same section, the choice of (N) is therefore related to the angle-of-attack choices. Discontinuities in curvature near the stagnation point may affect the accuracy of the laminar heating distribution.

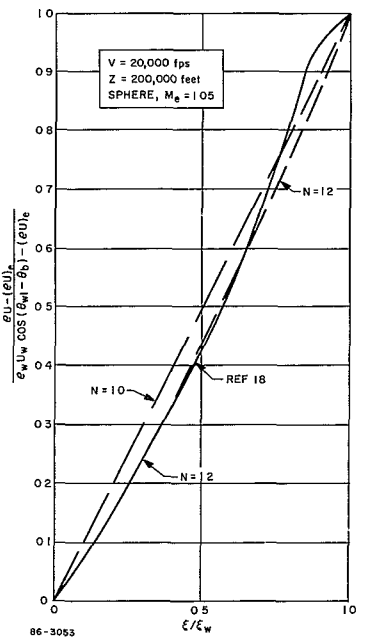

Figure 10 MASS FLOW DISTRIBUTION ACROSS THE SHOCK LAYER

12. Input Forms

An input form is provided for the user. All the information shown is key-punched for those variables specified. All numerical values have decimal points.

D. OUTPUT DEFINITIONS

1885A OUTPUT

External Name	Parameter	Units
GAMMA W	Adiabatic exponent behind shock.	--
HW/H	Ratio of local to total enthalpy behind shock.	--
IB	Radiation intensity at body.	Btu/ft^3
IW	Radiation intensity behind shock.	Btu/ft^3
PW/PØ	Pressure behind shock.	atmosphere
PWS/PØ	Stagnation pressure behind shock.	atmosphere
RW/RA	Ratio of density behind shock to ambient density.	--
RWS/RA	Ratio of stagnation density behind shock to ambient value.	--
RWUW/RAV	Ratio of specific mass flow rate behind shock to freestream value.	--
TH WL	Flow angle behind shock.	degrees
THW	Shock wave angle.	degrees
TW	Temperature behind shock.	°K
TWS	Stagnation temperature behind shock.	°K

1885B OUTPUT

External Name	Parameter	Units
ALPHA	Angle of attack.	degrees
DP/DSL, DP/DSW	Leeward and windward pressure gradients.	lb/ft^3
DT/DSTBL	Body curvature.	rad/ft
DTDS ST	Body curvature at the stagnation point.	rad/ft
I ST	Coordinate location number for stagnation point.	--
IWSN, ILSN	Coordinate location for sonic point in windward and leeward meridians.	--
MØTBL	Body section number.	--
PE/PSL, PE/PS W	Leeward and windward pressure distribution.	--
QLL, QLW	Leeward and windward laminar heating distribution; ratio of local to zero angle-of-attack stagnation point value.	--
QLS ALØ	Laminar heating rate at stagnation point at zero angle of attack; used to normalize all laminar heating rates.	Btu/ft^2-sec
QRL, QRW	Leeward and windward radiation heating distribution; ratio of local to zero angle-of-attack stagnation point value.	--
QRS ALØ	Radiation heating rate at stagnation point at zero angle of attack; used to normalize all laminar heating rates.	Btu/ft^{-2}-sec

External Name	Parameter	Units
QTL, QTW	Leeward and windward turbulent heating distribution; ratio of local to zero angle-of-attack sonic point value.	--
QTS ALØ	Turbulent heating rate at sonic point at zero angle of attack, used to normalize all turbulent heating rates.	Btu/ft^2-sec
REL, REW	Leeward and windward Reynolds number distribution; ratio of local to free stream value.	--
REYA	Free stream Reynolds number based on vehicle diameter (2RC); used to normalize all Reynolds numbers.	--
SECT	Section Number	--
THETBL, THETBW	Body slope of windward and leeward meridians.	degrees
THETOTBL	Body angle in zero angle-of-attack axes.	degrees
THET ST	Body angle at stagnation point in zero angle-of-attack coordinates.	degrees
THETW SN THETL SN	Windward and leeward sonic point angle in wind axes.	degrees
XBL, YBL, SBL XBW, YBW, SBW	Body windward and leeward coordinates and surface distance in wind axes.	feet
XBWSN, TBWSN, SBWSN, XBLSN, YBLSN, SBLSN	Coordinates and surface distance to windward and leeward sonic points measured in wind axes.	feet
XØL, YØL XØW, YØW	Body windward and leeward coordinates at angle of attack measured in zero angle-of-attack axes.	feet

External Name	Parameter	Units
XØTBL, YØTBL, SØTBL	Body coordinates and surface distance at zero angle of attack as measured in zero angle-of-attach axes.	feet
XØWSN, YØWSN, XØLSN, YØLSN	Location of windward and leeward sonic point at angle of attack in zero angle-of-attack axes.	feet
XSIL, XSIW	Leeward and windward shock detachment distance.	feet
XST, YST, SST	Body coordinates and surface distance to stagnation point at angle of attack as measured in zero angle-of-attack axes.	feet

E. SAMPLE PROBLEM

1. Statement of Problem

Determine the pressure and heating distributions on a blunt cone configuration for the trajectories obtained in the Sample Problem for Program 1880. The angle of attack range is specified as 0 to 180 degrees.

2. Input Forms

The input forms for Programs 1885A and B containing all the necessary input data are shown on following pages. All the variable names should be keypunched where data is specified; decimals are used throughout. Additional input forms are also provided on following pages for the program user.

3. Output

The output of Program 1885A is also included in following pages. The oblique shock data are given as a function of the wave angle. In this case, only limited radiation intensity data is given as it is so low; an automatic test on IW and IB is done in the program such that their calculation is dropped if the last value calculated is less than 1.0.

The output of Program 1885B is shown on following pages. The first tabular array contains the basic geometric data of the vehicle.

Following the first array of data are rows of data summarizing pertinent results contained in the subsequent data array, such as the locations of the stagnation and sonic points. The distribution of pressure, laminar heating, turbulent heating, Reynolds number, and radiation heating are given along with a list of axial coordinates in the zero angle of attack axes which identifies each point. The transformed body coordinates, meridian distance, and local body angles are also given for each point. The shock detachment distance (XSI) is given, permitting the shock shape to be drawn. Tests are provided on (QR) and (XSI) to terminate these quantities when QR becomes less than one percent of the stagnation point value and when (XSI) exceeds (RC), or if the shock angle becomes negative or less than the Mach angle. In the present case, as only one point was found for IB and IW, the radiation interpolated between these values and zero until the shock angle decreases more than two degrees and the body pressure drops slightly, beyond which the IB and IW are both zero and hence QR is zero.

The values of (B) and (Δ_s) and (RW) which were used for the shockwave calculation are indicated.

Two cases are present for which the program was unable to determine shock shapes. These cases are the windward meridian at α = 20 degrees the leeward meridian at α = 40 degrees. For these two points, inputs are required for (RW) and (B).

F. DIAGNOSTICS

1885A

A number of messages are given in the printout reflecting the following program diagnostics.

1. NØ VALID SØLUTIØN

The equilibrium gas dynamics (1883) solution was not able to obtain a solution with positive concentrations for all the species satisfying the element and charge conservation relationships. In this case the data is linearly interpolated between the last and the next point, for which a solution is found.

2. NØT CØNVERGED IN 30 ITERATIØNS

The equilibrium gas dynamics (1883) solution was unable to converge within 30 iterations to within 1 percent on the enthalpy, uses last value found.

1885B

1. CANNØT FIND THETA FOR RW ØR B, SKIP CASE

A shock shape cannot be found satisfying continuity for the assumed flow model; Requires input DELT, RWØ, BSHØCT.

2. SIN(THETAW) NEG. FØR XB = ( ).

The shock shape curves toward body beyond given XB, stops the calculation at the last prior XB output.

3. THETAW BELØW LIMIT AT XB = ( ).

The shock shape calculation is stopped, as at the next output point, the wave angle is less than the mach angle.

4. YW LESS THAN YB:

The shock wave calculation is stopped as, at the next output point, the wave ordinate is less than the body ordinate.

RAD 2 0963
5 63

DIGITAL COMPUTER INPUT REQUEST FORM	PROBLEM NO 1885A	PROGRAMMER
	TITLE	

MEMO NO	SECTION NO	WORK ORDER NO	(E240 USE ONLY)	REQUESTED BY	EXT	EST TIME	PAGE 1 OF 1 PAGES

PROGRAM WILL SELECT TAPE A5

$INPUT

DATE	= _____,	MEMØ	= _____,	CASE	= _____,
DELAL	= _____,	RHØA	= _____,	XN	= _____,
ILAST	= _____,	TA	= _____,	XØ	= _____,
INSTØP	= _____,	V	= _____,	XPEVER	= _____,
PRTAB	= _____,	XA	= _____,	XPLAST	= _____,
PRTAPE	= _____,	XC	= _____,		

$

RAD 2 0963
5 63

DIGITAL COMPUTER INPUT REQUEST FORM

PROBLEM NO 1885B | PROGRAMMER

TITLE

MEMO NO	SECTION NO	WORK ORDER NO	(E240 USE ONLY)	REQUESTED BY	EXT	EST TIME	PAGE 1 OF 3 PAGES

PROGRAM WILL SELECT A5. IF LINKED TO AN 1885A RUN, THIS MUST BE TAPE OF 1885A RESULTS.

$INPUT

DATE = _____,	MEMØ = _____,	CASE = _____,
BETA = _____,	RA = _____,	THC = _____,
CØMQRD = _____,	RB = _____,	THETAT = _____,
DN2 = _____,	RC = _____,	THN = _____,
ENTH = _____,	RHØA = _____,	TH2G = _____,
GAMSØ = _____,	RN = _____,	TH3G = _____,
HDHS90 = _____,	RSB = _____,	TTØ = _____,
ILAST = _____,	RSC = _____,	UP2 = _____,
LC = _____,	RSN = _____,	V = _____,
LE = _____,	RT = _____,	XA = _____,
LX = _____,	TA = _____,	XC = _____,
MACH = _____,	TAPE = _____,	XM = _____,
NALPHA = _____,	TB = _____,	XN = _____,
PN = _____,	THA = _____,	XØ = _____,
PRES = _____,	THB = _____,	XØTBL = _____,

ALPHA = _____, _____, _____, _____, _____,
_____, _____, _____, _____, _____,

DELT = _____, _____, _____, _____, _____,
_____, _____, _____, _____, _____,

N = _____, _____, _____, _____, _____,
_____, _____, _____, _____, _____,

BSHØCT = _____, _____, _____, _____, _____,
_____, _____, _____, _____, _____,
_____, _____, _____, _____, _____,
_____, _____, _____, _____, _____,

MM = _____, _____, _____, _____, _____,
_____, _____, _____, _____, _____,
_____, _____, _____, _____, _____,
_____, _____, _____, _____, _____,

NN = _____, _____, _____, _____, _____,
_____, _____, _____, _____, _____,
_____, _____, _____, _____, _____,
_____, _____, _____, _____, _____,

RWØ = _____, _____, _____, _____, _____,
_____, _____, _____, _____, _____,
_____, _____, _____, _____, _____,
_____, _____, _____, _____, _____,

XJ = _____, _____, _____, _____, _____,
_____, _____, _____, _____, _____,
_____, _____, _____, _____, _____,
_____, _____, _____, _____, _____,

RAD 2-0954 5 63

DIGITAL COMPUTER INPUT REQUEST FORM	PROBLEM NO	MEMO NO	SECTION NO	CONTINUATION SHEET PAGE 3 OF 3 PAGES

DTDSTB = _____, _____, _____, _____, _____,
_____, _____, _____, _____, _____,
_____, _____, _____, _____, _____,
_____, _____, _____, _____, _____,
_____, _____, _____, _____, _____,

RTBL = _____, _____, _____, _____, _____,
_____, _____, _____, _____, _____,
_____, _____, _____, _____, _____,
_____, _____, _____, _____, _____,
_____, _____, _____, _____, _____,

TABLE _____, _____, _____, _____, _____,
_____, _____, _____, _____, _____,
_____, _____, _____, _____, _____,
_____, _____, _____, _____, _____,
_____, _____, _____, _____, _____,

XTBL = _____, _____, _____, _____, _____,
_____, _____, _____, _____, _____,
_____, _____, _____, _____, _____,
_____, _____, _____, _____, _____,
_____, _____, _____, _____, _____,

$

RAD 2-0963
5 63

DIGITAL COMPUTER INPUT REQUEST FORM	PROBLEM NO 1885A	PROGRAMMER
	TITLE	

MEMO NO	SECTION NO	WORK ORDER NO	(E240 USE ONLY)	REQUESTED BY	EXT	EST TIME	PAGE 1 OF 1 PAGES
PL169	K420	W305-050-0005		P. Levine	2996		

```
$INPUT

DATE   =          ,   MEMØ  =          ,   CASE   =  1.0     ,
DELAL  =          ,   RHØA  =  4.4E-07  ,   XN     =  0.80    ,
ILAST  =  1.      ,   TA    =  200.0    ,   XØ     =          ,
INSTØP =          ,   V     =  12874    ,   XPEVER =          ,
PRTAB  =          ,   XA    =          ,   XPLAST =          ,
PRTAPE =          ,   XC    =  0.20     ,

$
```

RAD 2-0963 5 63

DIGITAL COMPUTER INPUT REQUEST FORM

PROBLEM NO 1885B | PROGRAMMER

TITLE

MEMO NO	SECTION NO	WORK ORDER NO	(E240 USE ONLY)	REQUESTED BY	EXT	EST TIME	PAGE 1 OF 3 PAGES
PL169	K420	W305-050-0005		P. Levine	2996		

$INPUT

DATE	=		MEMØ	=		CASE	=	1.0 ,
BETA	=		RA	=		THC	=	
CØMQRD	=	1. ,	RB	=		THETAT	=	
DN2	=		RC	=	7.5 ,	THN	=	60.0 ,
ENTH	=		RHØA	=		TH2G	=	
GAMSØ	=		RN	=	1.25 ,	TH3G	=	
HDHS90	=		RSB	=	.15 ,	TTØ	=	0. ,
ILAST	=	1.0 ,	RSC	=	.15 ,	UP2	=	
LC	=		RSN	=		V	=	
LE	=	1.4 ,	RT	=	3.75 ,	XA	=	
LX	=	0.52 ,	TA	=		XC	=	
MACH	=		TAPE	=		XM	=	
NALPHA	=	9 ,	TB	=	1000.0 ,	XN	=	
PN	=	0.7 ,	THA	=	-80.0 ,	XØ	=	
PRES	=		THB	=		XØTBL	=	

ALPHA = 0. , 10. , 20. , 30. , 40. ,
60. , 90. , 120. , 150. ,

DELT = , , , , ,
, , , , ,

RAD 2-0964 5-63

DIGITAL COMPUTER INPUT REQUEST FORM	PROBLEM NO	MEMO NO.	SECTION NO	CONTINUATION SHEET
	1885B	PL169	K420	PAGE 2 OF PAGES 3

N = 20., 0., 20.1, 20., 0.,
0., 0., 20., 20., 20.2,

BSHØCT =

MM = 20*1.

NN = 20 * 1.

RWØ =

XJ = 5 * 1., 5 * 0., 5 * 1., 5 * 0.,

DTDSTB = _____, _____, _____, _____, _____,

_____, _____, _____, _____, _____,

_____, _____, _____, _____, _____,

_____, _____, _____, _____, _____,

_____, _____, _____, _____, _____,

RTBL = _____, _____, _____, _____, _____,

_____, _____, _____, _____, _____,

_____, _____, _____, _____, _____,

_____, _____, _____, _____, _____,

_____, _____, _____, _____, _____,

TABLE = _____, _____, _____, _____, _____,

_____, _____, _____, _____, _____,

_____, _____, _____, _____, _____,

_____, _____, _____, _____, _____,

_____, _____, _____, _____, _____,

XTBL = _____, _____, _____, _____, _____,

_____, _____, _____, _____, _____,

_____, _____, _____, _____, _____,

_____, _____, _____, _____, _____,

_____, _____, _____, _____, _____,

$

```
*      DATE 07/05/66  JOB NO. 68 REMOVE BEFORE RESUBMITTING
*SILLERS  63                                          027230          070555
*      GOING TO IBSYS
*      IBSYS
```

```
$JOB
$ATTACH          A5
$AS              SYSUT5
$EXECUTE         IBJOB
IBJOB VERSION 5 HAS CONTROL.
$IBJOB           GO,MAP,NOSOURCE
```


4507

* MEMORY MAP *

SYSTEM		00000 THRU 02717
FILE BLOCK ORIGIN		02720
FILES	1. UNIT08	
	2. UNIT05	
	3. UNIT06	
FILE LIST ORIGIN		02764
PRE-EXECUTION INITIALIZATION		02772
CALL ON OBJECT PROGRAM		03023
OBJECT PROGRAM		03030 THRU 51431

DECK	ORIGIN	CONTROL SECTIONS (/NAME/=NON D LENGTH, (LOC)=DELETED, *=NOT REFERENCED)									
1. 1885A	03030	.....	04456 *								
2. UN08	04474	.UN08.	04474								
3. SOBLIK	04475	OBLIK	07210								
4. SFINDT	07405	FINDT	07636								
5. SHVST	07752	HVST	13741								
6. SZONES	14757	ZONES	20513								
7. SGETQ	20656	GETQ	22732								
8. SGETK	23054	GETK	23436								
9. SFINDH	23546	FINDH	24105								
10. SHEAT2	24222	HEAT2	25031								
11. SPHIL	25214	PHIL	25430								
12. SGETN	25474	GETN	27400								
13. SARTLU	27443	ARTLU	27655								
14. .LXCON	30026	.LXSTR	30026 *	.LXSTP	30032	.LXOUT	30150	.LX3TN	30112	IBEXIT	30112 *
		.LXCAL	30115 *	.LXERR	30115	.DBCLS	33277 *	.LXARG	30446	.LO	30471 *
		.CLSE	30477	.LF8L	30500 *	.LUNB	33501	.OPOUT	30502		
15. .IODEF	30506	.DEFIN	30506	.ATTAC	30512 *	.CLOSE	33514	.OPEN	30516	.READ	30520
		.WRITE	30522	.BSR	30532 *	.READR	30542	.RELES	30544 *	.LAREA	30555
		.LF8LK	30573	.LTSX	30576 *	.AREAI	30610	.LJNBL	30616	.ENTRY	30622
		.GOA	30655	.GO	30661	.DERR	33673	.NOPXI	30676	.COMXI	33750
		.EX34	30722								
16. .LXSL	30727	.LXSEL	30727	LXCSEL	30730	.LXTST	30733 *	.LXOVL	30773 *	.LXRCT	31004 *
		.LXIND	31053 *	.LXDIS	31056 *	.LXFLS	31057 *	.LTCH	31060		
17. .FPTRP	31066	.FFPT.	31066 *	.FPOUT	31225	.FPARS	31244	/.COUNT/	31246 *	OVFLOW	31317 *
18. .ERAS.	31326	E.1	31326	E.2	31327	E.3	31330	E.4	31331		
19. .XCC.	31332	CC.1	31332	CC.2	31333	CC.3	31334	CC.4	31335		
20. XIT	31336	EXIT	31336	.EXIT.	31336 *						
21. FXEM	31337	.FXEM.	31337	.FXOUT	31674	.FXARS	31702	/.OPT#./	31756		
22. FOUT	31767	.FOUT.	31767								
23. FCNV	32330	.FCON.	32330	.FCNV.	32353	.ENDFS	32366	.CNVSW	32370	.FDX1	32374
		.FDX2	32375	.DBC	32377	.DBC10	32533	.DBC20	32563	.DOSW	32573
		.DDFIX	32602	.FIXSW	32610	.DDBC	32655	.DORSI	33130	.DORS2	33132
		.D1	33135	.D2	33137	.FERR2	33224 *	.ANPT	33250	.DNPT	33275
		.LNTP	33360	.AOUT	33427	.DFLT	33445	.FLT	33601	.DEXPN	33671
		.FXD	33672	.HOUT	34022	.INTG	34072	.LOUT	34210	.DOUT	34277
		.XCF	34250	.TFST	34767	.KOUNT	34772	.LIST	34775	.DONE	35026
		.OUTBF	35052	.BUF	35102	.QSTD	35103	.WIDTH	35104	.GAIN	35105
		.GAIN1	35106	.FBDBF	35116	.DDDFL	35142	.DDFLG	35143	.MOD	35144
		.PEX	35145	.FEXP	35146	.DIG	35147				
24. FIOB	35165	.FIOB.	35165	.FCNT	35270 *	.FBLT.	35355	.FBDT.	35406	.FRLR.	35432
		.FRLR.	(35432)	.FWLR.	35476	.FWLR.	(35476)	.FBIBF	35536	.FRITE	35630
25. FIOS	35636	.FIOS.	35636	.FSEL.	35776	.FILR.	36002	.FRTD.	36011	.FRTD.	36016

451A

		.FILL.	36021	.FCLS	36023 *	.FOPN	35027 *	.REOF	36033 *	.TOUT.	36176		
		.REED	36204 *	.BIN	36205 *	.FCT	36206	.FCKSZ	36210				
26.	FIOH 36272	.FIOH.	36272	.FFIL.	37057	.FRTN.	37104 *						
27.	FWRD 37302	.FWRD.	37302										
28.	FWRB 37326	.FWRB.	37326										
29.	FWRU 37352	.FWRU.	37352										
30.	FWRO 37376	.FWRO.	37376	.FREST	37701 *								
31.	FRDU 40003	.FRDU.	40003										
32.	UNO5 40044	.UNO5.	40044										
33.	UNO6 40045	.UNO6.	40045	.BUFSZ	40046								
34.	FIOU 40051	.FIOU.	40051	.CTUID	40524	.NMLST	40547	.NAME.	41652	.INTAP	41653		
35.	JASIN 42276	ASINR	42356 *	ASIN	42365 *	ASIND	42374						
36.	JTNQR 42403	ATANQR	42461	ATANQ	42470 *	ATANQD	42477						
37.	JPLRT 42506	POLROT	43673										
38.	JCDIV 43746	COMDIV	44007										
39.	JPRT1 44045	POLRT1	44230										
40.	FLOG 44327	ALOG10	44327 *	ALOG	44330								
41.	FXPF 44533	EXP	44533										
42.	FSCN 44653	COS	44653	SIN	44655								
43.	FSQR 45064	SQRT	45064										
44.	FATN 45171	ATAN2	45171	ATAN	45173 *								
45.	FXP3 45377	.XP3.	45377										
46.	FRWT 45524	.FRWT.	45524										
47.	.IOCS 45631	.L(0)	45631	.MONSW	45651	.TEOR	45720	.DEFI.	46000	.JOINX	46044 *		
		.CLOS.	46063	.ATTC.	46076	.SHI	46313 *	.S49	46332 *	.OPEN.	46373		
		.OP4	46421 *	.OP7	46452 *	.OP9.2	46455 *	.RLSE.	46540	.RER2.	46560		
		.READ.	46561	.RER1.	46564	.WRIT.	46556	.WRTIA	46754 *	.EOFEX	47035 *		
		.FEEIT	47105	.GTIOX	47126	.RW7	47244 *	.RE7	47567 *	.ENDTR	50330		
		.SEL59	50332 *	.BSR.	50743	.EOTOF	51070	.ETOF3	51076 *	.SWITC	51125		
		.TCHEX	51426	.BASIO	51431 *								

48. .IOCSM 51432

I/O BUFFERS 51432 THRU 77613

UNUSED CORE 77614 THRU 77777

```
 $INPUT
 RHOA    =          +0.44000000E-06,
 V       =          +0.12874000E+05,
 XA      =          +0.00000000E-38,
 XC      =          +0.20000000E+00,
 XN      =          +0.80000000E+00,
 XO      =          +0.00000000E-38,
 XPLAST  =          +0.00000000E-38,
 XPEVER  =          +0.00000000E-38,
 DECAL   =          +0.20000000E+01,
 TA      =          +0.20000000E+03,
 PRTAB   =          +0.10000000E+01,
 PRTAPE  =          +0.10000000E+01,
 ILAST   =                       1,
 INSTOP  =          +0.10000000E+01,
 DATE    =          +0.75000000E+01,
 MEMO    =          +0.00000000E-38,
 CASE    =          +0.10000000E+01,
 $ END
```

TH W	RW/RA	RWUW/RAV	TH WL	GAMMA W	TW	PW/PO	HW/H	RWS/RA	PWS/PO	TWS	IW	IB
+90.00	+1.21E+01	+1.00E+00	+0.00	+1.18E+00	+3.66E+03	+3.17E-02	+9.99E-01	+1.25E+01	+3.32E-02	+3.64E+03	+1.74E-03	+1.74E-03
+88.00	+1.13E+01	+1.07E+00	+19.48	+1.18E+00	+4.57E+03	+3.15E-02	+9.91E-01	+1.13E+01	+3.33E-02	+4.61E+03	+0.00E-39	+0.00E-39
+86.00	+1.10E+01	+1.26E+00	+33.62	+1.19E+00	+4.65E+03	+3.13E-02	+9.87E-01	+1.13E+01	+3.39E-02	+4.71E+03	+0.00E-39	+0.00E-39
+84.00	+1.08E+01	+1.50E+00	+42.58	+1.19E+00	+4.71E+03	+3.10E-02	+9.81E-01	+1.13E+01	+3.49E-02	+4.81E+03	+0.00E-39	+0.00E-39
+82.00	+1.06E+01	+1.77E+00	+48.01	+1.20E+00	+4.77E+03	+3.07E-02	+9.73E-01	+1.21E+01	+3.63E-02	+4.90E+03	+0.00E-39	+0.00E-39
+80.00	+1.03E+01	+2.05E+00	+51.24	+1.20E+00	+4.81E+03	+3.03E-02	+9.62E-01	+1.25E+01	+3.82E-02	+5.00E+03	+0.00E-39	+0.00E-39
+78.00	+1.01E+01	+2.32E+00	+53.08	+1.21E+00	+4.84E+03	+2.98E-02	+9.49E-01	+1.33E+01	+4.05E-02	+5.10E+03	+0.00E-39	+0.00E-39
+76.00	+9.92E+00	+2.59E+00	+53.99	+1.21E+00	+4.85E+03	+2.93E-02	+9.34E-01	+1.37E+01	+4.33E-02	+5.20E+03	+0.00E-39	+0.00E-39
+74.00	+9.73E+00	+2.85E+00	+54.28	+1.22E+00	+4.85E+03	+2.87E-02	+9.15E-01	+1.43E+01	+4.68E-02	+5.29E+03	+0.00E-39	+0.00E-39
+72.00	+9.54E+00	+3.10E+00	+54.12	+1.22E+00	+4.83E+03	+2.80E-02	+8.97E-01	+1.53E+01	+5.09E-02	+5.39E+03	+0.00E-39	+0.00E-39
+70.00	+9.36E+00	+3.34E+00	+53.64	+1.23E+00	+4.80E+03	+2.73E-02	+8.75E-01	+1.63E+01	+5.58E-02	+5.48E+03	+0.00E-39	+0.00E-39
+68.00	+9.18E+00	+3.56E+00	+52.91	+1.23E+00	+4.76E+03	+2.65E-02	+8.53E-01	+1.92E+01	+6.17E-02	+5.57E+03	+0.00E-39	+0.00E-39
+66.00	+9.01E+00	+3.78E+00	+52.01	+1.24E+00	+4.70E+03	+2.57E-02	+8.29E-01	+1.99E+01	+6.86E-02	+5.67E+03	+0.00E-39	+0.00E-39
+64.00	+8.85E+00	+3.98E+00	+50.95	+1.24E+00	+4.62E+03	+2.48E-02	+8.02E-01	+2.20E+01	+7.69E-02	+5.76E+03	+0.00E-39	+0.00E-39
+62.00	+8.69E+00	+4.17E+00	+49.79	+1.25E+00	+4.53E+03	+2.39E-02	+7.75E-01	+2.45E+01	+8.69E-02	+5.85E+03	+0.00E-39	+0.00E-39
+60.00	+8.53E+00	+4.35E+00	+48.53	+1.25E+00	+4.43E+03	+2.29E-02	+7.44E-01	+2.74E+01	+9.88E-02	+5.94E+03	+0.00E-39	+0.00E-39
+58.00	+8.38E+00	+4.52E+00	+47.19	+1.26E+00	+4.32E+03	+2.19E-02	+7.15E-01	+3.09E+01	+1.13E-01	+6.03E+03	+0.00E-39	+0.00E-39
+56.00	+8.24E+00	+4.68E+00	+45.80	+1.26E+00	+4.19E+03	+2.09E-02	+6.85E-01	+3.52E+01	+1.31E-01	+6.12E+03	+0.00E-39	+0.00E-39
+54.00	+8.09E+00	+4.82E+00	+44.35	+1.27E+00	+4.05E+03	+1.99E-02	+6.53E-01	+4.03E+01	+1.52E-01	+6.21E+03	+0.00E-39	+0.00E-39
+52.00	+7.95E+00	+4.96E+00	+42.85	+1.27E+00	+3.91E+03	+1.88E-02	+6.21E-01	+4.55E+01	+1.77E-01	+6.30E+03	+0.00E-39	+0.00E-39
+50.00	+7.81E+00	+5.08E+00	+41.33	+1.27E+00	+3.75E+03	+1.78E-02	+5.87E-01	+5.41E+01	+2.09E-01	+6.38E+03	+0.00E-39	+0.00E-39
+48.00	+7.68E+00	+5.19E+00	+39.77	+1.28E+00	+3.58E+03	+1.67E-02	+5.54E-01	+6.34E+01	+2.49E-01	+6.47E+03	+0.00E-39	+0.00E-39
+46.00	+7.54E+00	+5.29E+00	+38.18	+1.28E+00	+3.41E+03	+1.56E-02	+5.20E-01	+7.53E+01	+2.98E-01	+6.56E+03	+0.00E-39	+0.00E-39
+44.00	+7.41E+00	+5.37E+00	+36.57	+1.29E+00	+3.23E+03	+1.45E-02	+4.87E-01	+8.95E+01	+3.60E-01	+6.64E+03	+0.00E-39	+0.00E-39
+42.00	+7.27E+00	+5.45E+00	+34.94	+1.29E+00	+3.05E+03	+1.34E-02	+4.53E-01	+1.08E+02	+4.39E-01	+6.73E+03	+0.00E-39	+0.00E-39
+40.00	+7.14E+00	+5.51E+00	+33.30	+1.30E+00	+2.86E+03	+1.24E-02	+4.20E-01	+1.31E+02	+5.43E-01	+6.81E+03	+0.00E-39	+0.00E-39
+38.00	+7.01E+00	+5.56E+00	+31.64	+1.30E+00	+2.66E+03	+1.13E-02	+3.87E-01	+1.61E+02	+6.71E-01	+6.89E+03	+0.00E-39	+0.00E-39
+36.00	+6.87E+00	+5.59E+00	+29.96	+1.31E+00	+2.47E+03	+1.03E-02	+3.54E-01	+1.99E+02	+8.42E-01	+6.98E+03	+0.00E-39	+0.00E-39
+34.00	+6.73E+00	+5.61E+00	+28.28	+1.31E+00	+2.28E+03	+9.29E-03	+3.23E-01	+2.53E+02	+1.07E+00	+7.06E+03	+0.00E-39	+0.00E-39
+32.00	+6.59E+00	+5.61E+00	+26.58	+1.32E+00	+2.08E+03	+8.33E-03	+2.92E-01	+3.17E+02	+1.37E+00	+7.14E+03	+0.00E-39	+0.00E-39
+30.00	+6.44E+00	+5.60E+00	+24.87	+1.32E+00	+1.89E+03	+7.40E-03	+2.62E-01	+4.08E+02	+1.79E+00	+7.22E+03	+0.00E-39	+0.00E-39
+28.00	+6.28E+00	+5.56E+00	+23.16	+1.33E+00	+1.71E+03	+6.51E-03	+2.34E-01	+5.31E+02	+2.35E+00	+7.30E+03	+0.00E-39	+0.00E-39
+26.00	+6.11E+00	+5.51E+00	+21.43	+1.33E+00	+1.53E+03	+5.66E-03	+2.07E-01	+7.03E+02	+3.15E+00	+7.38E+03	+0.00E-39	+0.00E-39
+24.00	+5.92E+00	+5.42E+00	+19.70	+1.34E+00	+1.35E+03	+4.86E-03	+1.81E-01	+9.44E+02	+4.28E+00	+7.45E+03	+0.00E-39	+0.00E-39
+22.00	+5.71E+00	+5.31E+00	+17.95	+1.34E+00	+1.18E+03	+4.11E-03	+1.57E-01	+1.29E+03	+5.90E+00	+7.54E+03	+0.00E-39	+0.00E-39
+20.00	+5.48E+00	+5.16E+00	+16.20	+1.35E+00	+1.03E+03	+3.41E-03	+1.35E-01	+1.79E+03	+8.29E+00	+7.62E+03	+0.00E-39	+0.00E-39
+18.00	+5.21E+00	+4.96E+00	+14.43	+1.35E+00	+8.78E+02	+2.78E-03	+1.14E-01	+2.52E+03	+1.18E+01	+7.70E+03	+0.00E-39	+0.00E-39
+16.00	+4.89E+00	+4.71E+00	+12.64	+1.36E+00	+7.41E+02	+2.20E-03	+9.53E-02	+3.63E+03	+1.70E+01	+7.77E+03	+0.00E-39	+0.00E-39
+14.00	+4.50E+00	+4.37E+00	+10.83	+1.36E+00	+6.17E+02	+1.69E-03	+7.85E-02	+5.25E+03	+2.48E+01	+7.85E+03	+0.00E-39	+0.00E-39
+12.00	+4.03E+00	+3.95E+00	+8.98	+1.37E+00	+5.06E+02	+1.24E-03	+6.39E-02	+7.43E+03	+3.63E+01	+7.92E+03	+0.00E-39	+0.00E-39
+10.00	+3.44E+00	+3.40E+00	+7.07	+1.37E+00	+4.10E+02	+8.57E-04	+5.13E-02	+1.05E+04	+5.11E+01	+8.00E+03	+0.00E-39	+0.00E-39
+8.00	+2.73E+00	+2.71E+00	+5.05	+1.38E+00	+3.28E+02	+5.42E-04	+4.07E-02	+1.39E+04	+6.81E+01	+8.08E+03	+0.00E-39	+0.00E-39
+6.00	+1.89E+00	+1.89E+00	+2.82	+1.38E+00	+2.61E+02	+2.97E-04	+3.20E-02	+1.83E+04	+8.01E+01	+8.15E+03	+0.00E-39	+0.00E-39
+4.00	+1.01E+00	+1.01E+00	+0.05	+1.38E+00	+2.01E+02	+1.21E-04	+2.44E-02	+1.58E+04	+7.73E+01	+8.22E+03	+0.00E-39	+0.00E-39
+3.97	+1.00E+00	+1.00E+00	+0.00	+1.38E+00	+2.00E+02	+1.19E-04	+2.43E-02	+1.57E+04	+7.72E+01	+8.22E+03	+0.00E-39	+0.00E-39

```
158 LINES OUTPUT.
    $IBSYS
    $PAUSE
    OPER. ACTION PAUSE

    ..CONTINUING

    $PAUSE
    OPER. ACTION PAUSE

    ..CONTINUING

    $IBSYS
0000000000000000098000 1I-0101GQ00000800C1F000000IBSYST-000010000027343000000000 )
    1 LINES OUTPUT THIS JOB.
```

```
$IBLDR SGETB                                    12/01/64    SGET0000
$IBLDR SGETOR                                   12/01/64    SGET0000
$IBLDR SFINDR                                   12/01/64    SFIN0000
$DATA
```


455A

* MEMORY MAP *

```
SYSTEM                                  00000 THRU  02717
FILE BLOCK ORIGIN                       02720
FILES        1.    UNIT08
             2.    UNIT05
             3.    UNIT06
FILE LIST ORIGIN                        02764
PRE-EXECUTION INITIALIZATION            02772
CALL ON OBJECT PROGRAM                  03023
OBJECT PROGRAM                          03030 THRU  70731
```

DECK	ORIGIN	CONTROL SECTIONS (/NAME/=NON 0 LENGTH, (LOC)=DELETED, *=NOT REFERENCED)									
1. 1885	03030	/// /(75154)	.....	16437 *							
2. SARTLU	16455	ARTLU	16667								
3. SADAMS	17040	ADAMS4	22220								
4. SPREP	22360	/// /(75154)	PREP	24536							
5. UNO8	25146	.UNO8.	25146								
6. STABLE	25147	TABLES	27074								
7. SDERQ5	30451	/// /(75154)	DERQ5	30614							
8. SWIND	30637	/// /(75154)	WIND	31650							
9. SQCONV	32072	QCONV	32750								
10. SSUB11	33143	/// /(75154)	SUBIIO	40267							
11. SHDPRN	40305	HDPRN1	40367								
12. SGETDS	40423	GETDS	41245								
13. SQRCLE	41423	QRCLER	41446								
14. SQRNMA	41474	QRNMAD	41523								
15. SSTAGP	41551	/// /(75154)	STAGPT	42453							
16. SGETPR	42574	GETPRE	42656								
17. SGETNU	42723	GETNU	43005								
18. SGETTO	43052	GETTOT	43167								
19. SLEE	43306	/// /(75154)	LEE	44303							
20. SACOSH	44524	ACOSH	44671								
21. SGETB	44717	GETB	45072								
22. SGETQR	45167	GETQRS	46451								
23. SFINDR	46670	FINDRW	50413								
24. .LXCON	50606	.LXSTR	50606 *	.LXSTP	50612	.LXOUT	50653	.LXRTN	50672	IBEXIT	50672 *
		.LXCAL	50675 *	.LXERR	50675	.DBCLS	51057 *	.LXARG	51224	.L9	51251 *
		.CLSE	51257	.LFBL	51260 *	.LUNB	51251	.DFOUT	51262		
25. .IODEF	51266	.DEFIN	51266	.ATTAC	51272 *	.CLOSE	51274	.OPEN	51276	.READ	51300
		.WRITE	51302	.BSR	51312 *	.READR	51322	.RELES	51324 *	.LAREA	51335
		.LFBLK	51353	.LTSX	51356 *	.AREA1	51370	.LUNBL	51376	.ENTRY	51432
		.GOA	51435	.GO	51441	.DERR	51455	.NOPXI	51456	.COMXI	51450
		.EX34	51502								
26. .CXSL	51507	.LXSEL	51507	LXCSEL	51510	.LXTSF	51513 *	.LXOVL	51553 *	.LXRCT	51554 *
		.LXIND	51633 *	.LXDIS	51636 *	.LXFLS	51637 *	.LTCH	51640		
27. .FPTRP	51646	.FPPT.	51645 *	.FPOUT	52005	.FPAR3	52024	/.COUNT/	52026 *	OVFLOW	52077 *
28. .ERAS.	52106	E.1	52106	E.2	52107	E.3	52110	E.4	52111		
29. .XCC.	52112	CC.1	52112	CC.2	52113	CC.3	52114	CC.4	52115		
30. XIT	52116	EXIT	52116	.EXIT.	52116 *						
31. FXEM	52117	.FXEM.	52117	.FXOUT	52454	.FXAR3	52462	/.OPT#./	52536		
32. FOUT	52547	.FOUT.	52547								
33. FCNV	53110	.FCON.	53110	.FCNV.	53133	.ENDFS	53145	.CNVSW	53150	.FDX1	53154
		.FDX2	53155	.DBC	53157	.DBCLD	53315	.DBC20	53343	.DDSW	53353
		.DDFIX	53362	.FIXSW	53370	.DDBC	53445	.DDRS1	53710	.DDRS2	53712

			.D1	53715	.D2	53717	.FCRR2	54034 *	.ANDT	54040	.DNDT	54055
			.LNTP	54140	.AOUT	54207	.DFLT	54223	.FLT	54341	.DEXPN	54451
			.FXD	54452	.HOUT	54602	.INTG	54632	.LOUT	54770	.OOUT	55007
			.XCF	55040	.TEST	55547	.KOUNT	55552	.LIST	55555	.DONE	55556
			.OUTBF	55632	.BUF	55662	.QSTO	55653	.WIDTH	55664	.GAIN	55665
			.GAIN1	55665	.FRDBF	55676	.DDDFL	55722	.DDFLG	55723	.MOD	55724
			.PEX	55725	.FEXP	55726	.DIG	55727				
	34.	FIOB	55745	.FIOB.	55745	.FCNT	56050	.FBLT.	56145	.FBOT.	56166	.FRLR.	56212
				.FRLR.	(56212)	.FWLR.	56256	.FWLR.	(56255)	.FBIBF	56314	.FRITE	55410 *
	35.	FIOS	56416	.FIOS.	56416	.FSEL.	56554	.FILR.	56552	.FRTB.	56571 *	.FRTD.	56576
				.FILL.	56601	.FCLS	56603 *	.FOPN	56607 *	.REOF	56613 *	.TOUT.	56755
				.REFD	56764 *	.AIN	56765 *	.FCT	56755	.FCKSZ	56770		
	36.	FIOH	57052	.FIOH.	57052	.FFIL.	57637	.FRTN.	57654 *				
	37.	FWRD	60062	.FWRD.	60062								
	38.	FRDB	60106	.FRDB.	60106								
	39.	FWRU	60132	.FWRU.	60132								
	40.	FWRO	60156	.FWRO.	60156	.FREST	60461 *						
	41.	FRDU	60563	.FRDU.	60563								
	42.	UNO5	60624	.UNO5.	60624								
	43.	UNO6	60625	.UNO6.	60625	.BUFSZ	60626						
	44.	FIOU	60631	.FIOU.	60631	.CTUIO	61304	.NMLST	61327	.NAME.	62432	.INTAP	62433
	45.	JASIN	63056	ASINR	63135 *	ASIN	63145	ASIND	63154				
	46.	JTNOR	63163	ATANOR	63241	ATANQ	63250 *	ATANQD	63257				
	47.	FLOG	63266	ALOG10	63266 *	ALOG	63267						
	48.	FXPF	63472	EXP	63472								
	49.	FSCN	63612	COS	63612	SIN	63614						
	50.	FSQR	64023	SQRT	64023								
	51.	FATN	64130	ATAN2	64130	ATAN	64132 *						
	52.	FXP2	64336	.XP2.	64336								
	53.	FXP3	64454	.XP3.	64454								
	54.	FRWT	64601	.FRWT.	64601								
	55.	FTNC	64706	COTAN	64705	TAN	64707	CRIT	65052 *				
	56.	.IOCS	65131	.LIOI	65131	.MONSW	65151	.TEOR	65220	.DEFI.	65300	.JOINX	65344 *
				.CLOS.	65363	.ATTC.	65376	.SHI	65613 *	.SHP	65652 *	.OPEN.	65673
				.OP4	65721 *	.OP7	65752 *	.OP9.2	65756 *	.RLSE.	66040	.REW.	66040
				.READ.	66041	.RERI.	66064	.WRIT.	66055	.WNTIA	66254 *	.EOFEX	66335 *
				.FEEIT	66405	.GTIOX	66426	.RW7	66544 *	.RE7	67167 *	.ENDTR	67630
				.SEL59	67632 *	.ASR.	70243	.FOTO=	70370	.ETOF3	70376 *	.SWITC	70425
				.TCHEX	70726	.BASIO	70731 *						
	57.	.IOCSM	70732										
	58.	//	75154										

I/O BUFFERS 70732 THRU 75044

UNUSED CORE 75045 THRU 75153

457

```
$INPUT
DATE   =   +0.75000000E+01,   -0.00000000E-19,
MEMO   =   +0.00000000E-38,   -0.00000000E-19,
CASE   =   +0.10000000E+01,
N      =   +0.10000000E+02,   +0.00000000E-38,   +0.10100000E+02,   +0.10000000E+02,   +0.00000000E-38,
           +0.00000000E-38,   +0.00000000E-38,   +0.10000000E+02,   +0.10000000E+02,   +0.10200000E+02,
RN     =   +0.12500000E+01,
RSN    =   +0.00000000E-38,
THC    =   +0.00000000E-38,
RC     =   +0.75000000E+01,
RSC    =   +0.15000000E+00,
LC     =   +0.00000000E-38,
THB    =   +0.00000000E-38,
RSB    =   +0.15000000E+00,
RB     =   +0.00000000E-38,
THA    =   -0.80000000E+02,
RA     =   +0.00000000E-38,
RT     =   +0.37500000E+01,
BETA   =   +0.00000000E-38,
TH2G   =   +0.00000000E-38,
TH3G   =   +0.00000000E-38,
XA     =   +0.00000000E-38,
XO     =   +0.00000000E-38,
XC     =   +0.00000000E-38,
XN     =   +0.00000000E-38,   -0.00000000E-19,   -0.00000000E-19,   -0.00000000E-19,   -0.00000000E-19,
           -0.00000000E-19,   -0.00000000E-19,   -0.00000000E-19,   -0.00000000E-19,   -0.00000000E-19,
RHOA   =   +0.00000000E-38,
TA     =   +0.00000000E-38,
V      =   +0.00000000E-38,
TB     =   +0.10000000E+04,
THN    =   +0.60000000E+02,
GAMSO  =   +0.00000000E-38,
```

XOTBL = +0.00000000E-38,

XTBL = +0.00000000E-38, +0.00000000E-38, +0.00000000E-38, +0.00000000E-38, +0.00000000E-38,
+0.00000000E-38, +0.00000000E-38, +0.00000000E-38, +0.00000000E-38, +0.00000000E-38,
+0.00000000E-38, +0.00000000E-38, +0.00000000E-38, +0.00000000E-38, +0.00000000E-38,
+0.00000000E-38, +0.00000000E-38, +0.00000000E-38, +0.00000000E-38, +0.00000000E-38,
+0.00000000E-38, +0.00000000E-38, +0.00000000E-38, +0.00000000E-38, +0.00000000E-38,

RTBL = +0.00000000E-38, +0.00000000E-38, +0.00000000E-38, +0.00000000E-38, +0.00000000E-38,
+0.00000000E-38, +0.00000000E-38, +0.00000000E-38, +0.00000000E-38, +0.00000000E-38,
+0.00000000E-38, +0.00000000E-38, +0.00000000E-38, +0.00000000E-38, +0.00000000E-38,
+0.00000000E-38, +0.00000000E-38, +0.00000000E-38, +0.00000000E-38, +0.00000000E-38,
+0.00000000E-38, +0.00000000E-38, +0.00000000E-38, +0.00000000E-38, +0.00000000E-38,

DTDSTR = +0.00000000E-38, +0.00000000E-38, +0.00000000E-38, +0.00000000E-38, +0.00000000E-38,
+0.00000000E-38, +0.00000000E-38, +0.00000000E-38, +0.00000000E-38, +0.00000000E-38,
+0.00000000E-38, +0.00000000E-38, +0.00000000E-38, +0.00000000E-38, +0.00000000E-38,
+0.00000000E-38, +0.00000000E-38, +0.00000000E-38, +0.00000000E-38, +0.00000000E-38,
+0.00000000E-38, +0.00000000E-38, +0.00000000E-38, +0.00000000E-38, +0.00000000E-38,

ALPHA = +0.00000000E-38, +0.10000000E+02, +0.20000000E+02, +0.30000000E+02, +0.40000000E+02,
+0.60000000E+02, +0.90000000E+02, +0.12000000E+03, +0.15000000E+03, -0.00000000E-19,

NALPHA = 9,

TTO = +0.00000000E-38,

PN = +0.70000000E+00,

LE = +0.14000000E+01,

LX = +0.52000000E+00,

THETAT = +0.00000000E-38,

NN = +0.50000000E+00, +0.50000000E+00, +0.50000000E+00, +0.50000000E+00, +0.50000000E+00,
+0.50000000E+00, +0.50000000E+00, +0.50000000E+00, +0.50000000E+00, +0.50000000E+00,
+0.50000000E+00, +0.50000000E+00, +0.50000000E+00, +0.50000000E+00, +0.50000000E+00,
+0.50000000E+00, +0.50000000E+00, +0.50000000E+00, +0.50000000E+00, +0.50000000E+00,

MM = +0.10000000E+01, +0.10000000E+01, +0.10000000E+01, +0.10000000E+01, +0.10000000E+01,
+0.10000000E+01, +0.10000000E+01, +0.10000000E+01, +0.10000000E+01, +0.10000000E+01,
+0.10000000E+01, +0.10000000E+01, +0.10000000E+01, +0.10000000E+01, +0.10000000E+01,
+0.10000000E+01, +0.10000000E+01, +0.10000000E+01, +0.10000000E+01, +0.10000000E+01,

TABLE = -0.00000000E-19, -0.00000000E-19, -0.00000000E-19, -0.00000000E-19, -0.00000000E-19,
-0.00000000E-19, -0.00000000E-19, -0.00000000E-19, -0.00000000E-19, -0.00000000E-19,
-0.00000000E-19, -0.00000000E-19, -0.00000000E-19, -0.00000000E-19, -0.00000000E-19,
-0.00000000E-19, -0.00000000E-19, -0.00000000E-19, -0.00000000E-19, -0.00000000E-19,
-0.00000000E-19, -0.00000000E-19, -0.00000000E-19, -0.00000000E-19, -0.00000000E-19,
-0.00000000E-19, -0.00000000E-19, -0.00000000E-19, -0.00000000E-19, -0.00000000E-19,
-0.00000000E-19, -0.00000000E-19, -0.00000000E-19, -0.00000000E-19, -0.00000000E-19,
-0.00000000E-19, -0.00000000E-19, -0.00000000E-19, -0.00000000E-19, -0.00000000E-19,
-0.00000000E-19, -0.00000000E-19, -0.00000000E-19, -0.00000000E-19, -0.00000000E-19,
-0.00000000E-19, -0.00000000E-19, -0.00000000E-19, -0.00000000E-19, -0.00000000E-19,
-0.00000000E-19, -0.00000000E-19, -0.00000000E-19, -0.00000000E-19, -0.00000000E-19,
-0.00000000E-19, -0.00000000E-19, -0.00000000E-19, -0.00000000E-19, -0.00000000E-19,

-0.00000000E-19,	-0.00000000E-19,	-0.00000000E-19,	-0.00000000E-19,	-0.00000000E-19,

+0.00000000E-38,	+0.00000000E-38,	+0.00000000E-38,	+0.00000000E-38,	+0.00000000E-38,	
+0.00000000E-38,	+0.00000000E-38,	+0.00000000E-38,	+0.00000000E-38,	+0.00000000E-38,	
+0.00000000E-38,	+0.00000000E-38,	+0.00000000E-38,	+0.00000000E-38,	+0.00000000E-38,	
+0.00000000E-38,	+0.00000000E-38,	+0.00000000E-38,	+0.00000000E-38,	+0.00000000E-38,	
+0.00000000E-38,	+0.00000000E-38,	+0.00000000E-38,	+0.00000000E-38,	+0.00000000E-38,	
+0.00000000E-38,	+0.00000000E-38,	+0.00000000E-38,	+0.00000000E-38,	+0.00000000E-38,	
+0.00000000E-38,	+0.00000000E-38,	+0.00000000E-38,	+0.00000000E-38,	+0.00000000E-38,	
+0.00000000E-38,	+0.00000000E-38,	+0.00000000E-38,	+0.00000000E-38,	+0.00000000E-38,	
+0.00000986E-38,	+0.33167918E-23,	+0.33135606E-23,	+0.33119474E-23,	+0.00000110E-26,	
+0.10359951E-24,	+0.00000281E-24,	+0.16168513E-25,	-0.00091520E+19,	-0.00063110E-26,	
+0.00028537E-38,	+0.18844866E-36,	-0.00000023E-38,	+0.00063110E-26,	+0.00028536E-38,	
+0.00007877E-26,	+0.10380148E-24,	+0.18844866E-36,	-0.00000023E-38,	+0.00063110E-26,	
+0.00028541E-38,	+0.10339781E-24,	+0.00007888E-26,	+0.10340039E-24,	+0.13584931F-19,	
+0.13572358E-19,	+0.33947493E-20,	-0.00000652E-29,	+0.03975120E-29,	+0.04136187E-23,	
+0.11858461E-19,	-0.00000001E-20,	+0.01588647E-19,	+0.26645677E-14,	+0.33167960E-23,	
-0.00007328E-35,	+0.04417637E-27,	+0.00032030E-25,	+0.00028619E-38,	+0.00031514E-26,	
+0.00028579E-38,	+0.12943596E-25,	+0.00015777E-26,	+0.04143971E-23,	-0.35276303E-37,	
+0.03388135E-19,	+0.04143959E-23,	+0.03388133E-19,	-0.00000722E-31,	-0.04046821E-26,	
+0.04143976E-23,	-0.35264838E-37,	-0.00047933E-31,	-0.04045916E-26,	+0.00279875F-23,	
+0.00007851E-26,	-0.47325514E-37,	+0.00007853E-26,	+0.10359838E-24,	+0.00005131E-24,	
-0.00008056E-23,	+0.49841258E+00,	+0.13571695E-19,	+0.13579000E-19,	+0.00031515E-26,	
+0.00028615E-38,	+0.00015777E-26,	-0.00031985E-31,	+0.08312195E-23,	+0.33119475E-23,	
+0.33135631E-23,	+0.12943596E-25,	+0.13565698E-19,	+0.20687552E-23,	+0.33881318E-20,	
+0.13559145E-19,	+0.13571696E-19,	-0.00361630E-29,	+0.04176272E-23,	-0.00007860E-26,	
+0.00080777E-23,	-0.00015777E-26,	-0.00048089E-31,	-0.00000001E-20,	+0.00028605E-38,	
-0.00585335E+19,	+0.00007878E-26,	+0.31554578E-29,	+0.00018313E-36,	+0.04143971E-23,	
+0.00317302E+00,	+0.49938915E+00,	+0.00318313E-35,	+0.03388132E-19,	-0.00048091E-31,	
-0.00018310E-36,	-0.04045848E-26,	-0.04045847E-25,	+0.20699710E-24,	-0.00007880E-26,	
+0.20780487E-24,	+0.49963344E+00,	-0.00007880E-25,	+0.00007777E-23,	-0.00000020E-26,	
+0.20780487E-24,	+0.49938931E+00,	+0.33135625E-23,	-0.70535431E-37,	+0.10164450E-19,	
+0.00012614E-25,	+0.13585490E-19,	+0.00114795E-38,	-0.47019780E-37,	+0.30114797E-38,	
-0.70529706E-37,	+0.00028629E-38,	+0.00000036E-25,	+0.04144116E-23,	+0.00000565E-38,	
+0.16181135E-25,	+0.00007878E-26,	+0.31554578E-29,	+0.10359927E-24,	-0.00000362E-36,	
+0.04417637E-27,	+0.47111610E-37,	+0.00286638E-38,	+0.00007880E-24,	+0.00028622E-38,	
+0.13579004E-19,	-0.70535401E-37,	+0.13578998E-19,	-0.33167972E-23,	+0.18844881E-36,	
+0.00000023E-38,	+0.16940659E-20,	+0.00007877E-26,	+0.10359941E-24,	+0.13578997E-19,	
+0.33167983E-23,	+0.00031515E-26,	+0.00172032E-19,	-0.33133371E-23,	-0.20687583E-23,	
+0.00000565E-38,	-0.33167994E-23,	+0.00020170E-24,	+0.18844959E-36,	-0.18370027F-19,	
+0.01486144E+19,	+0.18844998F-36,	+0.16181135E-25,	+0.00007881E-24,	+0.12621977E-27,	
+0.41439810E-24,	+0.00028630E-38,	+0.00000000E-38,	+0.00000000E-38,	-0.00000000E-37,	
+0.03673420E-38,	-0.11513579E+24,	+0.00000000E-37,	+0.26864381F-14,	-0.00119114E-19,	
-0.06095238E+02,	-0.06095238E+02,	+0.21079711E-35,	-0.17220459E-27,	-0.94603335E-26,	
-0.89297371E+06,	+0.00000000E-38,	+0.00000000E-38,	+0.00000000F-38,	+0.00000000E-38,	
+0.00000000E-38,	+0.00000000E-38,	-0.00000030E+19,	+0.00010474E+10,	-0.00121962F-38,	
-0.01483510E-19,	+0.00000036E-19,	+0.00000036E-19,			

PRES	=	+0.00000000E-38,
MACH	=	+0.00000000E-38,
ENTH	=	+0.00000000E-38,
XM	=	+0.00000000E-38,
HDHS90	=	+0.00000000E-38,
TAPE	=	+0.10000000E+01,
UP2	=	+0.10000000E-02,
DN2	=	+0.10000000E-03,

ILAST = +0.10000000E+01,

COMORD = +0.10000000E+01,

RWO = +0.00000000E-38, +0.00000000E-38, +0.00000000E-38, +0.00000000E-38, +0.00000000E-38,
+0.00000000E-38, +0.00000000E-38, +0.00000000E-38, +0.00000000E-38, +0.00000000E-38,
+0.00000000E-38, +0.00000000E-38, +0.00000000E-38, +0.00000000E-38, +0.00000000E-38,
+0.00000000E-38, +0.00000000E-38, +0.00000000E-38, +0.00000000E-38, +0.00000000E-38,

XJ = +0.10000000E+01, +0.10000000E+01, +0.10000000E+01, +0.10000000E+01, +0.10000000E+01,
+0.00000000E-38, +0.00000000E-38, +0.00000000E-38, +0.00000000E-38, +0.00000000E-38,
+0.10000000E+01, +0.10000000E+01, +0.10000000E+01, +0.10000000E+01, +0.10000000E+01,
+0.00000000E-38, +0.00000000E-38, +0.00000000E-38, +0.00000000E-38, +0.00000000E-38,

BSHOCT = +0.00000000E-38, +0.00000000E-38, +0.00000000E-38, +0.00000000E-38, +0.00000000E-38,
+0.00000000E-38, +0.00000000E-38, +0.00000000E-38, +0.00000000E-38, +0.00000000E-38,
+0.00000000E-38, +0.00000000E-38, +0.00000000E-38, +0.00000000E-38, +0.00000000E-38,
+0.00000000E-38, +0.00000000E-38, +0.00000000E-38, +0.00000000E-38, +0.00000000E-38,

DELT = +0.00000000E-38, +0.00000000E-38, +0.00000000E-38, +0.00000000E-38, +0.00000000E-38,
+0.00000000E-38, +0.00000000E-38, +0.00000000E-38, +0.00000000E-38, +0.00000000E-38,

$ END

462A

-60-

CASE +1.00 MEMO +0.00 DATE +7.50 PAGE 1

XOTBL	YOTBL	SOTBL	DT/DSTBL	THETOTBL	MOTBL
+0.0000000E-39	+0.0000000E-39	+0.0000000E-39	-8.0000000E-01	+9.0000000E+01	1
+1.7130934E-03	+6.5419983E-02	+6.5449846E-02	-8.0000000E-01	+8.7300000E+01	1
+6.8476424E-03	+1.3066062E-01	+1.3089969E-01	-8.0000000E-01	+8.4200000E+01	1
+1.5389584E-02	+1.9554309E-01	+1.9634954E-01	-8.0000000E-01	+8.1300000E+01	1
+2.7315505E-02	+2.5988962E-01	+2.6179938E-01	-8.0000000E-01	+7.8000000E+01	1
+4.2592725E-02	+3.2352381E-01	+3.2724923E-01	-8.0000000E-01	+7.5000000E+01	1
+6.1179362F-02	+3.8627125E-01	+3.9259907E-01	-8.0000000E-01	+7.2000000E+01	1
+8.3024483E-02	+4.4795994E-01	+4.5814892E-01	-8.0000000E-01	+6.9000000E+01	1
+1.0806819E-01	+5.0842081E-01	+5.2359877E-01	-8.0000000E-01	+6.6300000E+01	1
+1.3624186E-01	+5.6748813E-01	+5.8904861E-01	-8.0000000E-01	+6.3300000E+01	1
+1.6746826E-01	+6.2500001E-01	+6.5449845E-01	+0.0000000E-39	+6.0000000E+01	3
+5.6006644E-01	+1.3050000E+00	+1.4336948E+00	+0.0000000E-39	+6.0000000E+01	3
+9.5266461E-01	+1.9850000F+00	+2.2248911F+00	+0.0000000E-39	+6.0000000E+01	3
+1.3452628E+00	+2.6649999E+00	+3.0100874E+00	+0.0000000E-39	+6.0000000E+01	3
+1.7378610F+00	+3.3449999E+00	+3.7952838E+00	+0.0000000E-39	+6.0000000E+01	3
+2.1304592E+00	+4.0249999E+00	+4.5804802E+00	+0.0000000E-39	+6.0000000E+01	3
+2.5230573E+00	+4.7049999E+00	+5.3656754E+00	+0.0000000E-39	+6.0000000E+01	3
+2.9156555E+00	+5.3849999E+00	+6.1508728E+00	+0.0000000E-39	+6.0000000E+01	3
+3.3082537E+00	+6.0649999E+00	+6.9360692E+00	+0.0000000E-39	+6.0000000E+01	3
+3.7008519E+00	+6.7449998E+00	+7.7212656E+00	+0.0000000E-39	+6.0000000E+01	3
+4.0934501E+00	+7.4249998E+00	+8.5064619E+00	-6.6666666E+00	+6.0000000E+01	4
+4.1020012F+00	+7.4381675F+00	+8.5221597E+00	-6.6666666E+00	+5.4300000E+01	4
+4.1118820E+00	+7.4503693E+00	+8.5378777E+00	-6.6666666E+00	+4.8000000E+01	4
+4.1229842E+00	+7.4614714E+00	+8.5545356E+00	-6.6666666E+00	+4.2000000E+01	4
+4.1351860E+00	+7.4713523E+00	+8.5692936E+00	-6.6666666E+00	+3.6000000E+01	4
+4.1483538E+00	+7.4799036E+00	+8.5850016E+00	-6.6666666E+00	+3.0000000E+01	4
+4.1623433F+00	+7.4870316E+00	+8.6007096E+00	-6.6666666E+00	+2.4000000E+01	4
+4.1770012E+00	+7.4926583E+00	+8.6164175F+00	-6.6666666F+00	+1.8000000E+01	4
+4.1921670F+00	+7.4967219F+00	+8.6321255F+00	-6.6666666E+00	+1.2000000E+01	4

+4.2076745E+00	+7.4991781E+00	+8.6478335E+00	-6.6666666E+00	+5.0000237E+00	4
+4.2233537E+00	+7.4999998E+00	+8.6635413E+00	-5.6666666E+00	+0.0000000E-39	8
+4.2447296E+00	+7.4985400E+00	+8.6844852E+00	-6.6666666E+00	-7.9999729E+00	8
+4.2646992E+00	+7.4941890E+00	+8.7054292E+00	-6.6666666E+00	-1.5999991E+01	8
+4.2843640E+00	+7.4870316E+00	+8.7253731E+00	-6.6666666E+00	-2.3999954E+01	8
+4.3028415E+00	+7.4772070E+00	+8.7473171E+00	-6.6666666E+00	-3.1999982E+01	8
+4.3197717E+00	+7.4649065E+00	+8.7632610E+00	-6.6666666E+00	-3.9999955E+01	8
+4.3348253E+00	+7.4503694E+00	+8.7892050E+00	-6.6666666E+00	-4.7999974E+01	8
+4.3477093E+00	+7.4338787E+00	+8.8101490E+00	-6.6666666E+00	-5.5999991E+01	8
+4.3581727E+00	+7.4157556E+00	+8.8310928E+00	-6.6666666E+00	-6.3999965E+01	8
+4.3660121E+00	+7.3963524E+00	+8.8520368E+00	-6.6666666E+00	-7.1999983E+01	8
+4.3710748E+00	+7.3760471E+00	+8.8729807E+00	+0.0000000E-39	-8.0000000E+01	9
+4.4350117E+00	+7.0134425E+00	+9.2411791E+00	+0.0000000E-39	-8.0000000E+01	9
+4.4989488E+00	+6.6508377E+00	+9.6093776E+00	+0.0000000E-39	-8.0000000E+01	9
+4.5628858E+00	+6.2882330E+00	+9.9775761E+00	+0.0000000E-39	-8.0000000E+01	9
+4.6268228E+00	+5.9256284E+00	+1.0345775E+01	+0.0000000E-39	-8.0000000E+01	9
+4.6907597E+00	+5.5630236E+00	+1.0713973E+01	+0.0000000E-39	-8.0000000E+01	9
+4.7546967E+00	+5.2004189E+00	+1.1082172E+01	+0.0000000E-39	-8.0000000E+01	9
+4.8186337E+00	+4.8378143E+00	+1.1450370E+01	+0.0000000E-39	-8.0000000E+01	9
+4.8825707E+00	+4.4752095F+00	+1.1818568E+01	+0.0000000E-39	-8.0000000E+01	9
+4.9465078E+00	+4.1126047E+00	+1.2186767E+01	+0.0000000E-39	-8.0000000E+01	9
+5.0104447E+00	+3.7500001E+00	+1.2554965E+01	+0.0000000E-39	-9.0000000E+01	10
+5.0104447E+00	+3.3749999E+00	+1.2929965E+01	+0.0000000E-39	-9.0000000E+01	10
+5.0104447E+00	+2.9999999E+00	+1.3304965E+01	+0.0000000E-39	-9.0000000E+01	10
+5.0104447E+00	+2.6249999E+00	+1.3679965E+01	+0.0000000E-39	-9.0000000E+01	10
+5.0104447E+00	+2.2499999E+00	+1.4054965E+01	+0.0000000E-39	-9.0000000E+01	10
+5.0104447E+00	+1.8749999E+00	+1.4429965E+01	+0.0000000E-39	-9.0000000E+01	10
+5.0104447E+00	+1.4999999E+00	+1.4804965E+01	+0.0000000E-39	-9.0000000E+01	10
+5.0104447E+00	+1.1249999E+00	+1.5179965E+01	+0.0000000E-39	-9.0000000E+01	10
+5.0104447E+00	+7.4999988E-01	+1.5554965E+01	+0.0000000E-39	-9.0000000E+01	10
+5.0104447E+00	+3.7499988E-01	+1.5929965E+01	+0.0000000E-39	-9.0000000E+01	10
+5.0104447E+00	+0.0000000E-39	+1.6304965E+01	+0.0000000E-39	-9.0000000E+01	10

I ST	X ST	Y ST	S ST	DTDS ST	THET ST	SECT	ALPHA
1	+0.00000E-39	+0.00000E-39	+0.00000E-39	-8.00000E-01	+9.00000E+01	1	+0.00

IW SN	XOW SN	YOW SN	XBW SN	YBW SN	SBW SN	THETA SN	SECT	ALPHA
23	+4.10200E+00	+7.43817E+00	+4.11026E+00	+7.44853E+00	+8.53542E+00	+4.89372E+01	4	+0.00

4534

AT ALPHA = +0.0000E-39 WINDWARD, RW = +1.4258E+00 DELS = +9.9891E-02 BETDEX = +4.7070E+00

DES ALO = +2.5867E+01 OTS ALO = +4.4360E+00 REYA = +3.1086E+05 QRS ALO = +2.9783E-04

SEC	XO W	XB W	YB W	SB W	THETBW	PE/PS W	DP/DS W	QL W	QT W	RE W	QR W	KSI W
1	+0.000E-39	+0.000E-39	+0.000E-39	+0.000E-39	+90.00	+1.000E+00	+4.809E-39	+1.000E+00	+0.000E-39	+0.000E+00	+1.000E+00	+9.089E-02
1	+1.713E-03	+1.713E-03	+6.542E-02	+6.545E-02	+87.00	+9.973E-01	-5.857E+00	+9.957E-01	+4.899E-01	+1.473E-04	+8.211E-01	+9.101E-02
1	+6.848E-03	+6.848E-03	+1.307E-01	+1.309E-01	+84.00	+9.891E-01	-1.167E+01	+9.872E-01	+7.380E-01	+5.857E-04	+6.832E-01	+9.142E-02
1	+1.539E-02	+1.539E-02	+1.955E-01	+1.963E-01	+81.00	+9.755E-01	-1.735E+01	+9.532E-01	+9.294E-01	+1.301E-03	+4.532E-01	+9.233E-02
1	+2.732E-02	+2.732E-02	+2.599E-01	+2.618E-01	+78.00	+9.568E-01	-2.283E+01	+9.479E-01	+1.089E+00	+2.282E-03	+1.278E-01	+9.402E-02
1	+4.259E-02	+4.259E-02	+3.235E-01	+3.272E-01	+75.00	+9.330E-01	-2.806E+01	+9.376E-01	+1.223E+00	+3.506E-03	+0.000E-39	+9.681E-02
1	+6.118E-02	+6.118E-02	+3.863E-01	+3.927E-01	+72.00	+9.045E-01	-3.299E+01	+9.217E-01	+1.335E+00	+4.942E-03	+0.000E-39	+1.011E-01
1	+8.302E-02	+8.302E-02	+4.480E-01	+4.581E-01	+69.00	+8.715E-01	-3.756E+01	+9.011E-01	+1.425E+00	+6.559E-03	+0.000E-39	+1.071E-01
1	+1.081E-01	+1.081E-01	+5.084E-01	+5.235E-01	+66.00	+8.346E-01	-4.171E+01	+8.762E-01	+1.497E+00	+8.317E-03	+0.000E-39	+1.153E-01
1	+1.362E-01	+1.362E-01	+5.675E-01	+5.890E-01	+63.00	+7.939E-01	-4.541E+01	+8.477E-01	+1.550E+00	+1.017E-02	+0.000E-39	+1.259E-01
3	+1.675E-01	+1.675E-01	+6.250E-01	+6.545E-01	+60.00	+7.500E-01	+0.000E-39	+7.516E-01	+1.586E+00	+1.208E-02	+0.000E-39	+1.392E-01
3	+5.601E-01	+5.601E-01	+1.305E+00	+1.440E+00	+60.00	+7.500E-01	+0.000E-39	+4.345E-01	+1.354E+00	+2.658E-02	+0.000E-39	+2.611E-01
3	+9.527E-01	+9.527E-01	+1.985E+00	+2.225E+00	+60.00	+7.500E-01	+0.000E-39	+3.739E-01	+1.241E+00	+4.108E-02	+0.000E-39	+3.525E-01
3	+1.345E+00	+1.345E+00	+2.665E+00	+3.010E+00	+60.00	+7.500E-01	+0.000E-39	+3.218E-01	+1.149E+00	+5.557E-02	+0.000E-39	+4.347E-01
3	+1.738E+00	+1.738E+00	+3.345E+00	+3.795E+00	+60.00	+7.500E-01	+0.000E-39	+2.382E-01	+1.116E+00	+7.007E-02	+0.000E-39	+5.130E-01
3	+2.130E+00	+2.130E+00	+4.025E+00	+4.580E+00	+60.00	+7.500E-01	+0.000E-39	+2.533E-01	+1.074E+00	+8.456E-02	+0.000E-39	+5.893E-01
3	+2.523E+00	+2.523E+00	+4.705E+00	+5.365E+00	+60.00	+7.500E-01	+0.000E-39	+2.438E-01	+1.041E+00	+9.905E-02	+0.000E-39	+6.644E-01
3	+2.916E+00	+2.916E+00	+5.385E+00	+6.151E+00	+60.00	+7.500E-01	+0.000E-39	+2.281E-01	+1.013E+00	+1.136E-01	+0.000E-39	+7.389E-01
3	+3.308E+00	+3.308E+00	+6.065E+00	+6.936E+00	+60.00	+7.500E-01	+0.000E-39	+2.151E-01	+9.899E-01	+1.281E-01	+0.000E-39	+8.128E-01
3	+3.701E+00	+3.701E+00	+6.745E+00	+7.721E+00	+60.00	+7.500E-01	+0.000E-39	+2.041E-01	+9.679E-01	+1.425E-01	+0.000E-39	+8.864E-01
4	+4.093E+00	+4.093E+00	+7.425E+00	+8.506E+00	+60.00	+7.500E-01	-4.051E+02	+3.547E-01	+9.493E-01	+1.570E-01	+0.000E-39	+9.597E-01
4	+4.102E+00	+4.102E+00	+7.438E+00	+8.522E+00	+54.00	+6.545E-01	-4.449E+02	+3.475E-01	+9.960E-01	+1.721E-01	+0.000E-39	+9.789E-01
4	+4.102E+00	+4.110E+00	+7.449E+00	+8.535E+00	+48.94	+5.685E-01	-4.633E+02	+3.382E-01	+1.000E+00	+1.786E-01	+0.000E-39	+1.002E+00
4	+4.112E+00	+4.112E+00	+7.450E+00	+8.538E+00	+48.00	+5.539E-01	-4.652E+02	+3.423E-01	+9.976E-01	+1.791E-01	+0.000E-39	+1.007E+00
4	+4.123E+00	+4.123E+00	+7.461E+00	+8.554E+00	+42.00	+4.497E-01	-4.652E+02	+3.383E-01	+9.956E-01	+1.778E-01	+0.000E-39	+1.053E+00
4	+4.135E+00	+4.135E+00	+7.471E+00	+8.569E+00	+36.00	+3.478E-01	-4.449E+02	+2.713E-01	+8.729E-01	+1.681E-01	+0.000E-39	+1.117E+00
4	+4.148E+00	+4.148E+00	+7.480E+00	+8.535E+00	+30.00	+2.706E-01	-3.037E+02	+2.237E-01	+7.800E-01	+1.545E-01	+0.000E-39	+1.204E+00
4	+4.162E+00	+4.162E+00	+7.487E+00	+8.601E+00	+24.00	+2.097E-01	-2.452E+02	+1.982E-01	+6.853E-01	+1.391E-01	+0.000E-39	+1.321E+00
4	+4.177E+00	+4.177E+00	+7.493E+00	+8.616E+00	+18.00	+1.599E-01	-1.957E+02	+1.555E-01	+5.910E-01	+1.225E-01	+0.000E-39	+1.480E+00
4	+4.192E+00	+4.192E+00	+7.497E+00	+8.632E+00	+12.00	+1.210E-01	-1.570E+02	+1.273E-01	+5.009E-01	+1.062E-01	+0.000E-39	+1.700E+00
4	+4.208E+00	+4.208E+00	+7.499E+00	+8.648E+00	+6.00	+8.933E-02	-1.227E+02	+1.018E-01	+4.160E-01	+9.006E-02	+0.000E-39	+2.015E+00
8	+4.223E+00	+4.223E+00	+7.500E+00	+8.664E+00	+0.00	+6.548E-02	-9.516E+01	+8.106E-02	+3.415E-01	+7.538E-02	+0.000E-39	+2.495E+00
8	+4.244E+00	+4.244E+00	+7.499E+00	+8.684E+00	-8.00	+4.157E-02	-5.530E+01	+5.555E-02	+2.535E-01	+5.740E-02	+0.000E-39	+3.697E+00
8	+4.265E+00	+4.265E+00	+7.494E+00	+8.705E+00	-16.00	+2.573E-02	-4.352E+01	+3.951E-02	+1.833E-01	+4.253E-02	+0.000E-39	+7.151E+00
8	+4.284E+00	+4.284E+00	+7.487E+00	+8.726E+00	-24.00	+1.533E-02	-2.836E+01	+2.534E-02	+1.281E-01	+3.043E-02	+0.000E-39	+8.551E+01
8	+4.303E+00	+4.303E+00	+7.477E+00	+8.747E+00	-32.00	+8.790E-03	-1.739E+01	+1.783E-02	+8.652E-02	+2.104E-02	+0.000E-39	+0.000E-39
8	+4.320E+00	+4.320E+00	+7.465E+00	+8.769E+00	-40.00	+4.847E-03	-1.036E+01	+1.165E-02	+5.645E-02	+1.403E-02	+0.000E-39	+0.000E-39
8	+4.335E+00	+4.335E+00	+7.450E+00	+8.789E+00	-48.00	+3.598E-03	+0.000E-39	+3.330E-03	+4.547E-02	+1.144E-02	+0.000E-39	+0.000E-39
8	+4.348E+00	+4.348E+00	+7.434E+00	+8.810E+00	-56.00	+3.598E-03	+0.000E-39	+3.332E-03	+4.545E-02	+1.147E-02	+0.000E-39	+0.000E-39
8	+4.358E+00	+4.358E+00	+7.416E+00	+8.831E+00	-64.00	+3.598E-03	+0.000E-39	+3.334E-03	+4.543E-02	+1.151E-02	+0.000E-39	+0.000E-39
8	+4.366E+00	+4.366E+00	+7.396E+00	+8.852E+00	-72.00	+3.598E-03	+0.000E-39	+3.335E-03	+4.541E-02	+1.152E-02	+0.000E-39	+0.000E-39
9	+4.371E+00	+4.371E+00	+7.376E+00	+8.873E+00	-80.90	+3.598E-03	+0.000E-39	+3.325E-03	+4.539E-02	+1.155E-02	+0.000E-39	+0.000E-39
9	+4.435E+00	+4.435E+00	+7.013E+00	+9.241E+00	-80.00	+3.598E-03	+0.000E-39	+3.159E-03	+4.502E-02	+1.203E-02	+0.000E-39	+0.000E-39
9	+4.499E+00	+4.499E+00	+6.651E+00	+9.609E+00	-80.00	+3.598E-03	+0.000E-39	+2.993E-03	+4.447E-02	+1.251E-02	+0.000E-39	+0.000E-39
9	+4.563E+00	+4.563E+00	+6.288E+00	+9.979E+00	-80.00	+3.598E-03	+0.000E-39	+2.827E-03	+4.434E-02	+1.298E-02	+0.000E-39	+0.000E-39
9	+4.627E+00	+4.627E+00	+5.926E+00	+1.035E+01	-80.00	+3.598E-03	+0.000E-39	+2.662E-03	+4.402E-02	+1.347E-02	+0.000E-39	+0.000E-39
9	+4.691E+00	+4.691E+00	+5.563E+00	+1.071E+01	-80.00	+3.598E-03	+0.000E-39	+2.498E-03	+4.371E-02	+1.395E-02	+0.000E-39	+0.000E-39
9	+4.755E+00	+4.755E+00	+5.200E+00	+1.108E+01	-80.90	+3.598E-03	+0.000E-39	+2.334E-03	+4.341E-02	+1.443E-02	+0.000E-39	+0.000E-39
9	+4.819E+00	+4.819E+00	+4.838E+00	+1.145E+01	-80.00	+3.598E-03	+0.000E-39	+2.170E-03	+4.313E-02	+1.490E-02	+0.000E-39	+0.000E-39
9	+4.883E+00	+4.883E+00	+4.475E+00	+1.182E+01	-80.90	+3.598E-03	+0.000E-39	+2.006E-03	+4.286E-02	+1.538E-02	+0.000E-39	+0.000E-39
9	+4.947E+00	+4.947E+00	+4.113E+00	+1.219E+01	-80.00	+3.598E-03	+0.000E-39	+1.843E-03	+4.260E-02	+1.586E-02	+0.000E-39	+0.000E-39
10	+5.010E+00	+5.010E+00	+3.750E+00	+1.255E+01	-90.00	+3.598E-03	+0.000E-39	+1.680E-03	+4.234E-02	+1.634E-02	+0.000E-39	+0.000E-39
10	+5.010E+00	+5.010E+00	+3.375E+00	+1.293E+01	-90.00	+3.598E-03	+0.000E-39	+1.512E-03	+4.210E-02	+1.683E-02	+0.000E-39	+0.000E-39
10	+5.010E+00	+5.010E+00	+3.000E+00	+1.330E+01	-90.00	+3.598E-03	+0.000E-39	+1.348E-03	+4.186E-02	+1.732E-02	+0.000E-39	+0.000E-39

10	+5.010E+00	+5.010E+00	+2.625E+00	+1.368E+01	-90.00	+3.598E-03	+0.000E-39	+1.175E-03	+4.142E-02	+1.781E-02	+0.000E-39	+0.000E-39
10	+5.010E+00	+5.010E+00	+2.250E+00	+1.405E+01	-90.00	+3.598E-03	+0.000E-39	+1.007E-03	+4.140E-02	+1.830E-02	+0.000E-39	+0.000E-39
10	+5.010E+00	+5.010E+00	+1.875E+00	+1.443E+01	-90.00	+3.598E-03	+0.000E-39	+8.394E-04	+4.118E-02	+1.878E-02	+0.000E-39	+0.000E-39
10	+5.010E+00	+5.010E+00	+1.500E+00	+1.480E+01	-90.00	+3.598E-03	+0.000E-39	+5.715E-04	+4.097E-02	+1.927E-02	+0.000E-39	+0.000E-39
10	+5.010E+00	+5.010E+00	+1.125E+00	+1.518E+01	-90.00	+3.598E-03	+0.000E-39	+3.035E-04	+4.077E-02	+1.976E-02	+0.000E-39	+0.000E-39
10	+5.010E+00	+5.010E+00	+7.500E-01	+1.555E+01	-90.00	+3.598E-03	+0.000E-39	+3.357E-04	+4.057E-02	+2.025E-02	+0.000E-39	+0.000E-39
10	+5.010E+00	+5.010E+00	+3.750E-01	+1.593E+01	-90.00	+3.598E-03	+0.000E-39	+1.579E-04	+4.038E-02	+2.074E-02	+0.000E-39	+0.000E-39
10	+5.010E+00	+5.010E+00	+0.000E-39	+1.630E+01	-90.00	+3.598E-03	+0.000E-39	+0.000E-39	+4.019E-02	+2.122E-02	+0.000E-39	+0.000E-39

I ST	X ST	Y ST	S ST	DTDS ST	THET ST	SECT	ALPHA
5	+1.89903E-02	+2.17060E-01	+2.18166E-01	-8.00000E-01	+8.00000E+01	1	+10.00

IW SN	XOW SN	YOW SN	XBW SN	YBW SN	SBW SN	THETW SN	SECT	ALPHA
22	+4.12298E+00	+7.46147E+00	+2.78877E+00	+7.85319E+00	+8.34344E+00	+4.89372E+01	4	+10.00

IL SN	XOL SN	YOL SN	XBL SN	YBL SN	SBL SN	THETL SN	SECT	ALPHA
27	+4.09345E+00	+7.42500E+00	+5.34140E+00	+6.82055E+00	+8.72741E+00	+4.89372E+01	4	+10.00

4957

AT ALPHA = +1.0000E+01 WINDWARD, RW = +2.4942E+01 DELS = +5.3548E-03 3S4DCK = -7.3225E+00
SIN(THETAW) NEG. FOR XB = +2.9581E+00 RW = +2.4949E+01 DELS = +5.3548E-03 3S4DCK = -7.3225E+00

SEC	XO W	XB W	YB W	SB W	THETBW	PB/PS W	DP/DS W	QL W	QT W	RE W	DR W	XST W
1	+1.899E-02	+0.000E-39	+0.000E-39	+0.000E-39	+90.00	+1.000E+00	+4.839E-35	+1.333E+00	+0.000E-39	+0.000E-39	+5.903E-02	+5.365E-03
1	+2.732E-02	+7.615E-04	+4.362E-02	+4.363E-02	+88.00	+9.988E-01	-3.915E+00	+1.332E+00	+3.786E-01	+5.427E-05	+6.517E-02	+6.091E-03
1	+4.259E-02	+4.757E-03	+1.089E-01	+1.091E-01	+85.00	+9.924E-01	-9.747E+00	+1.324E+00	+6.529E-01	+3.998E-04	+9.303E-02	+9.917E-03
1	+6.118E-02	+1.216E-02	+1.740E-01	+1.745E-01	+82.00	+9.806E-01	-1.547E+01	+9.912E-01	+8.692E-01	+1.032E-03	+1.202E-01	+1.707E-02
1	+8.302E-02	+2.297E-02	+2.385E-01	+2.400E-01	+79.00	+9.636E-01	-2.133E+01	+9.397E-01	+1.039E+00	+1.927E-03	+1.023E-01	+2.765E-02
1	+1.081E-01	+3.713E-02	+3.024E-01	+3.054E-01	+76.00	+9.415E-01	-2.635E+01	+9.820E-01	+1.181E+00	+3.073E-03	+3.914E-02	+4.179E-02
1	+1.362E-01	+5.462E-02	+3.655E-01	+3.709E-01	+73.00	+9.145E-01	-3.139E+01	+9.577E-01	+1.300E+00	+4.442E-03	+4.882E-02	+5.965E-02
3	+1.675E-01	+7.538E-02	+4.275E-01	+4.363E-01	+70.00	+8.830E-01	+0.000E-39	+8.867E-01	+1.397E+00	+5.003E-03	+5.677E-02	+8.151E-02
3	+5.601E-01	+3.439E-01	+1.165E+00	+1.222E+00	+70.00	+8.830E-01	+0.000E-39	+4.439E-01	+1.137E+00	+1.693E-02	+0.000E-39	+3.366E-01
3	+9.527E-01	+6.125E-01	+1.903E+00	+2.007E+00	+70.00	+8.830E-01	+0.000E-39	+3.595E-01	+1.030E+00	+2.761E-02	+0.000E-39	+5.626E-01
3	+1.345E+00	+8.810E-01	+2.641E+00	+2.792E+00	+70.00	+8.830E-01	+0.000E-39	+3.087E-01	+9.640E-01	+3.841E-02	+0.000E-39	+7.592E-01
3	+1.738E+00	+1.150E+00	+3.379E+00	+3.577E+00	+70.00	+8.830E-01	+0.000E-39	+2.744E-01	+9.174E-01	+4.921E-02	+0.000E-39	+9.251E-01
3	+2.130E+00	+1.418E+00	+4.117E+00	+4.362E+00	+70.00	+8.830E-01	+0.000E-39	+2.494E-01	+8.917E-01	+6.001E-02	+0.000E-39	+1.058E+00
3	+2.523E+00	+1.687E+00	+4.855E+00	+5.148E+00	+70.00	+8.830E-01	+0.000E-39	+2.301E-01	+8.530E-01	+7.081E-02	+0.000E-39	+1.155E+00
3	+2.916E+00	+1.955E+00	+5.592E+00	+5.933E+00	+70.00	+8.830E-01	+0.000E-39	+2.145E-01	+8.291E-01	+8.162E-02	+0.000E-39	+1.211E+00
3	+3.308E+00	+2.224E+00	+6.330E+00	+6.718E+00	+70.00	+8.830E-01	+0.000E-39	+2.019E-01	+8.088E-01	+9.242E-02	+0.000E-39	+1.218E+00
3	+3.701E+00	+2.492E+00	+7.068E+00	+7.503E+00	+70.00	+8.830E-01	+0.000E-39	+1.912E-01	+7.911E-01	+1.032E-01	+0.000E-39	+1.160E+00
4	+4.093E+00	+2.761E+00	+7.806E+00	+8.288E+00	+70.00	+8.830E-01	-3.007E+02	+3.612E-01	+7.755E-01	+1.141E-01	+0.000E-39	+1.012E+00
4	+4.102E+00	+2.767E+00	+7.820E+00	+8.304E+00	+64.30	+8.079E-01	-3.586E+02	+3.332E-01	+8.972E-01	+1.398E-01	+0.000E-39	+9.845E-01
4	+4.112E+00	+2.775E+00	+7.834E+00	+8.320E+00	+58.00	+7.192E-01	-4.204E+02	+3.950E-01	+9.744E-01	+1.592E-01	+0.000E-39	+9.672E-01
4	+4.123E+00	+2.784E+00	+7.847E+00	+8.335E+00	+52.00	+6.210E-01	-4.539E+02	+3.909E-01	+1.006E+00	+1.714E-01	+0.000E-39	+9.588E-01
4	+4.123E+00	+2.789E+00	+7.853E+00	+8.343E+00	+48.94	+5.685E-01	-4.633E+02	+3.872E-01	+1.005E+00	+1.745E-01	+0.000E-39	+9.578E-01
4	+4.135E+00	+2.794E+00	+7.859E+00	+8.351E+00	+46.00	+5.192E-01	-4.675E+02	+3.767E-01	+9.928E-01	+1.756E-01	+0.000E-39	+9.589E-01
4	+4.148E+00	+2.805E+00	+7.870E+00	+8.367E+00	+40.00	+4.153E-01	-4.696E+02	+3.675E-01	+9.366E-01	+1.715E-01	+0.000E-39	+9.673E-01
4	+4.162E+00	+2.818E+00	+7.879E+00	+8.383E+00	+34.00	+3.152E-01	-4.337E+02	+2.917E-01	+8.439E-01	+1.594E-01	+0.000E-39	+9.835E-01
4	+4.177E+00	+2.831E+00	+7.887E+00	+8.398E+00	+28.00	+2.457E-01	-2.797E+02	+2.389E-01	+7.472E-01	+1.454E-01	+0.000E-39	+1.008E+00
4	+4.192E+00	+2.846E+00	+7.894E+00	+8.414E+00	+22.00	+1.890E-01	-2.253E+02	+1.991E-01	+6.509E-01	+1.297E-01	+0.000E-39	+1.040E+00
4	+4.208E+00	+2.861E+00	+7.899E+00	+8.430E+00	+16.00	+1.440E-01	-1.808E+02	+1.640E-01	+5.579E-01	+1.137E-01	+0.000E-39	+1.079E+00
8	+4.223E+00	+2.876E+00	+7.902E+00	+8.445E+00	+10.00	+1.081E-01	-1.433E+02	+1.329E-01	+4.700E-01	+9.778E-02	+0.000E-39	+1.126E+00
8	+4.244E+00	+2.897E+00	+7.905E+00	+8.466E+00	+2.00	+7.201E-02	-1.029E+02	+9.577E-02	+3.546E-01	+7.789E-02	+0.000E-39	+1.196E+00
8	+4.265E+00	+2.918E+00	+7.904E+00	+8.487E+00	-6.00	+4.587E-02	-7.088E+01	+5.953E-02	+2.718E-01	+5.953E-02	+0.000E-39	+1.274E+00
8	+4.284E+00	+2.938E+00	+7.900E+00	+8.508E+00	-14.00	+2.852E-02	-4.759E+01	+3.736E-02	+1.975E-01	+4.439E-02	+0.000E-39	+1.352E+00
8	+4.303E+00	+2.958E+00	+7.894E+00	+8.529E+00	-22.00	+1.697E-02	-3.061E+01	+2.224E-02	+1.381E-01	+3.183E-02	+0.000E-39	+1.427E+00
8	+4.320E+00	+2.977E+00	+7.885E+00	+8.550E+00	-30.00	+9.712E-03	-1.895E+01	+1.122E-02	+9.329E-02	+2.199E-02	+0.000E-39	+0.000E-39
8	+4.335E+00	+2.994E+00	+7.873E+00	+8.571E+00	-38.00	+5.325E-03	-1.125E+01	+1.352E-02	+6.069E-02	+1.464E-02	+0.000E-39	+0.000E-39
8	+4.348E+00	+3.010E+00	+7.859E+00	+8.592E+00	-46.00	+3.598E-03	+0.000E-39	+4.000E-03	+4.568E-02	+1.118E-02	+0.000E-39	+0.000E-39
8	+4.358E+00	+3.023E+00	+7.843E+00	+8.613E+00	-54.00	+3.598E-03	+0.000E-39	+3.992E-03	+4.556E-02	+1.121E-02	+0.000E-39	+0.000E-39
9	+4.366E+00	+3.034E+00	+7.825E+00	+8.634E+00	-62.00	+3.598E-03	+0.000E-39	+3.983E-03	+4.544E-02	+1.124E-02	+0.000E-39	+0.000E-39
9	+4.371E+00	+3.043E+00	+7.806E+00	+8.655E+00	-70.00	+3.598E-03	+0.000E-39	+3.973E-03	+4.562E-02	+1.127E-02	+0.000E-39	+0.000E-39
9	+4.435E+00	+3.169E+00	+7.460E+00	+9.023E+00	-70.00	+3.598E-03	+0.000E-39	+3.791E-03	+4.524E-02	+1.175E-02	+0.000E-39	+0.000E-39
9	+4.499E+00	+3.295E+00	+7.114E+00	+9.391E+00	-70.00	+3.598E-03	+0.000E-39	+3.611E-03	+4.488E-02	+1.222E-02	+0.000E-39	+0.000E-39
9	+4.563E+00	+3.421E+00	+6.768E+00	+9.759E+00	-70.00	+3.598E-03	+0.000E-39	+3.432E-03	+4.453E-02	+1.270E-02	+0.000E-39	+0.000E-39
9	+4.627E+00	+3.547E+00	+6.422E+00	+1.013E+01	-70.00	+3.598E-03	+0.000E-39	+3.253E-03	+4.420E-02	+1.318E-02	+0.000E-39	+0.000E-39
9	+4.691E+00	+3.672E+00	+6.076E+00	+1.050E+01	-70.00	+3.598E-03	+0.000E-39	+3.075E-03	+4.389E-02	+1.366E-02	+0.000E-39	+0.000E-39
9	+4.755E+00	+3.798E+00	+5.730E+00	+1.086E+01	-70.00	+3.598E-03	+0.000E-39	+2.898E-03	+4.359E-02	+1.414E-02	+0.000E-39	+0.000E-39
9	+4.819E+00	+3.924E+00	+5.384E+00	+1.123E+01	-70.00	+3.598E-03	+0.000E-39	+2.721E-03	+4.330E-02	+1.462E-02	+0.000E-39	+0.000E-39
9	+4.883E+00	+4.050E+00	+5.038E+00	+1.160E+01	-70.00	+3.598E-03	+0.000E-39	+2.544E-03	+4.302E-02	+1.510E-02	+0.000E-39	+0.000E-39
9	+4.947E+00	+4.176E+00	+4.692E+00	+1.197E+01	-70.00	+3.598E-03	+0.000E-39	+2.368E-03	+4.275E-02	+1.559E-02	+0.000E-39	+0.000E-39
10	+5.010E+00	+4.302E+00	+4.346E+00	+1.234E+01	-80.00	+3.598E-03	+0.000E-39	+2.193E-03	+4.249E-02	+1.606E-02	+0.000E-39	+0.000E-39
10	+5.010E+00	+4.367E+00	+3.977E+00	+1.271E+01	-80.00	+3.598E-03	+0.000E-39	+2.005E-03	+4.224E-02	+1.655E-02	+0.000E-39	+0.000E-39
10	+5.010E+00	+4.432E+00	+3.607E+00	+1.309E+01	-80.00	+3.598E-03	+0.000E-39	+1.819E-03	+4.199E-02	+1.703E-02	+0.000E-39	+0.000E-39
10	+5.010E+00	+4.497E+00	+3.238E+00	+1.346E+01	-80.00	+3.598E-03	+0.000E-39	+1.632E-03	+4.176E-02	+1.752E-02	+0.000E-39	+0.000E-39
10	+5.010E+00	+4.563E+00	+2.869E+00	+1.384E+01	-80.00	+3.598E-03	+0.000E-39	+1.445E-03	+4.153E-02	+1.801E-02	+0.000E-39	+0.000E-39
10	+5.010E+00	+4.628E+00	+2.500E+00	+1.421E+01	-80.00	+3.598E-03	+0.000E-39	+1.259E-03	+4.131E-02	+1.850E-02	+0.000E-39	+0.000E-39
10	+5.010E+00	+4.693E+00	+2.130E+00	+1.459E+01	-80.00	+3.598E-03	+0.000E-39	+1.073E-03	+4.109E-02	+1.899E-02	+0.000E-39	+0.000E-39

10	+5.010E+00	+4.758E+00	+1.761E+00	+1.496E+01	-80.00	+3.598E-03	+0.000E-39	+8.370E-04	+4.088E-02	+1.949E-02	+0.000E-39	+0.000E-39
10	+5.010E+00	+4.823E+00	+1.392E+00	+1.534E+01	-80.00	+3.598E-03	+0.000E-39	+7.010E-04	+4.069E-02	+1.996E-02	+0.000E-39	+0.000E-39
10	+5.010E+00	+4.888E+00	+1.022E+00	+1.571E+01	-80.00	+3.598E-03	+0.000E-39	+5.149E-04	+4.049E-02	+2.045E-02	+0.000E-39	+0.000E-39
10	+5.010E+00	+4.953E+00	+6.530E-01	+1.609E+01	-80.00	+3.598E-03	+0.000E-39	+3.289E-04	+4.030E-02	+2.094E-02	+0.000E-39	+0.000E-39
10	+5.010E+00	+5.018E+00	+2.837E-01	+1.646E+01	-80.00	+3.598E-03	+0.000E-39	+1.429E-04	+4.011E-02	+2.143E-02	+0.000E-39	+0.000E-39
10	+5.010E+00	+5.084E+00	+8.561E-02	+1.684E+01	-80.00	+3.598E-03	+0.000E-39	+4.312E-05	+3.993E-02	+2.192E-02	+0.000E-39	+0.000E-39

AT ALPHA = +1.0000E+01, LEEWARD, RW = +2.2599E+00 DELS = +5.3648E-03 3540DX = +1.5198E+00

SEC	XO L	XB L	YB L	SB L	THETBL	PE/PS L	DP/DS L	QL L	QT L	QF L	QR L	XSI L
1	+1.899E-02	+0.000E-39	+0.000E-39	+3.000E-39	+90.00	+1.900E+00	+4.839E-05	+1.383E+00	+0.000E-39	+0.000E-39	+5.903E-02	+5.365E-03
1	+1.539E-02	+1.904E-04	+2.182E-02	+2.182E-02	+89.00	+9.997E-01	-1.959E+00	+1.383E+00	+2.849E-01	+1.894E-05	+5.743E-02	+5.450E-03
1	+6.848E-03	+3.045E-03	+8.720E-02	+8.727E-02	+86.00	+9.951E-01	-7.812E+00	+1.327E+00	+6.594E-01	+3.020E-04	+5.798E-02	+6.727E-03
1	+1.713E-03	+9.317E-03	+1.523E-01	+1.527E-01	+83.30	+9.851E-01	-1.333E+01	+3.941E-01	+8.044E-01	+7.973E-04	+5.426E-02	+9.549E-03
1	+0.000E-39	+1.899E-02	+2.171E-01	+2.182E-01	+80.30	+9.698E-01	-1.920E+01	+9.345E-01	+9.859E-01	+1.603E-03	+5.346E-02	+1.395E-02
1	+1.713E-03	+3.204E-02	+2.812E-01	+2.835E-01	+77.00	+9.494E-01	-2.461E+01	+9.353E-01	+1.137E+00	+2.665E-03	+0.000E-39	+1.997E-02
1	+6.848E-03	+4.842E-02	+3.445E-01	+3.491E-01	+74.00	+9.242E-01	-2.974E+01	+9.353E-01	+1.268E+00	+3.962E-03	+0.000E-39	+2.767E-02
1	+1.539E-02	+6.810E-02	+4.079E-01	+4.145E-01	+71.00	+8.940E-01	-3.455E+01	+9.792E-01	+1.367E+00	+5.463E-03	+0.000E-39	+3.713E-02
1	+1.899E-02	+7.538E-02	+4.275E-01	+4.353E-01	+70.30	+8.830E-01	-3.608E+01	+9.734E-01	+1.387E+00	+6.003E-03	+0.000E-39	+4.069E-02
1	+2.732E-02	+9.102E-02	+4.683E-01	+4.800E-01	+68.00	+8.597E-01	-3.899E+01	+3.594E-01	+1.451E+00	+7.132E-03	+0.000E-39	+4.846E-02
1	+4.259E-02	+1.171E-01	+5.289E-01	+5.454E-01	+65.00	+8.214E-01	-4.330E+01	+8.339E-01	+1.517E+00	+8.928E-03	+0.000E-39	+6.176E-02
1	+6.118E-02	+1.463E-01	+5.868E-01	+6.109E-01	+62.00	+7.795E-01	-4.653E+01	+8.353E-01	+1.554E+00	+1.001E-02	+0.000E-39	+7.717E-02
1	+8.302E-02	+1.785E-01	+6.438E-01	+6.763E-01	+59.00	+7.347E-01	-4.956E+01	+7.735E-01	+1.578E+00	+1.272E-02	+0.000E-39	+9.484E-02
1	+1.081E-01	+2.137E-01	+6.990E-01	+7.413E-01	+56.00	+6.873E-01	-5.234E+01	+7.339E-01	+1.606E+00	+1.462E-02	+0.000E-39	+1.150E-01
1	+1.362E-01	+2.517E-01	+7.529E-01	+8.072E-01	+53.00	+6.378E-01	-5.496E+01	+7.314E-01	+1.631E+00	+1.646E-02	+0.000E-39	+1.378E-01
3	+1.675E-01	+2.924E-01	+8.035E-01	+8.727E-01	+50.30	+5.868E-01	+0.000E-39	+5.155E-01	+1.581E+00	+1.817E-02	+0.000E-39	+1.634E-01
3	+5.601F-01	+7.972E-01	+1.405F+00	+1.658E+00	+50.00	+5.868E-01	+0.000E-39	+4.159E-01	+1.399E+00	+1.452E-02	+0.000E-39	+3.783E-01
3	+9.527E-01	+1.302F+00	+2.006E+00	+2.443E+00	+50.00	+5.868E-01	+0.000E-39	+3.459E-01	+1.287E+00	+9.087E-02	+0.000E-39	+5.065E-01
3	+1.345E+00	+1.807E+00	+2.608F+00	+3.228E+00	+50.00	+5.868E-01	+0.000E-39	+3.384E-01	+1.272E+00	+4.722E-02	+0.000E-39	+5.931E-01
3	+1.738E+00	+2.311F+00	+3.209E+00	+4.013E+00	+50.00	+5.868E-01	+0.000E-39	+2.740E-01	+1.165E+00	+8.359E-02	+0.000E-39	+6.570E-01
3	+2.130E+00	+2.816F+00	+3.811E+00	+4.799E+00	+50.00	+5.868E-01	+0.000E-39	+2.517E-01	+1.124E+00	+0.993E-02	+0.000E-39	+7.073E-01
3	+2.523E+00	+3.321E+00	+4.412E+00	+5.584E+00	+50.30	+5.868E-01	+0.000E-39	+2.341E-01	+1.090E+00	+1.143E-01	+0.000E-39	+7.487E-01
3	+2.916E+00	+3.825E+00	+5.014E+00	+6.369E+00	+50.00	+5.868E-01	+0.000E-39	+2.193E-01	+1.062E+00	+1.326E-01	+0.000E-39	+7.840E-01
3	+3.308E+00	+4.330E+00	+5.615E+00	+7.154E+00	+50.30	+5.868E-01	+0.000E-39	+2.073E-01	+1.038E+00	+1.490E-01	+0.000E-39	+8.150E-01
3	+3.701E+00	+4.835F+00	+6.217E+00	+7.939E+00	+50.00	+5.868E-01	+0.000E-39	+1.975E-01	+1.018E+00	+1.653E-01	+0.000E-39	+8.429E-01
4	+4.093E+00	+5.340E+00	+6.818E+00	+8.725E+00	+50.00	+5.868E-01	-4.606E+02	+3.274E-01	+9.974E-01	+1.817E-01	+0.000E-39	+8.683E-01
4	+4.093E+00	+5.341E+00	+6.821F+00	+8.727E+00	+48.94	+5.685E-01	-4.633E+02	+3.230E-01	+9.956E-01	+1.826E-01	+0.000E-39	+8.691E-01
4	+4.102E+00	+5.350E+00	+6.830E+00	+8.740E+00	+44.00	+4.844E-01	-4.675E+02	+2.998E-01	+9.700E-01	+1.832E-01	+0.000E-39	+8.773E-01
4	+4.112E+00	+5.362E+00	+6.840E+00	+8.756E+00	+38.00	+3.813E-01	-4.539E+02	+2.565E-01	+9.007E-01	+1.762E-01	+0.000E-39	+8.979E-01
4	+4.123E+00	+5.375F+00	+6.849E+00	+8.772E+00	+32.00	+2.981E-01	-3.310E+02	+2.235E-01	+8.127E-01	+1.637E-01	+0.000E-39	+9.315E-01
4	+4.135E+00	+5.389E+00	+6.857E+00	+8.787E+00	+26.00	+2.309E-01	-2.655E+02	+1.881E-01	+7.175E-01	+1.482E-01	+0.000E-39	+9.800E-01
4	+4.148E+00	+5.403F+00	+6.863E+00	+8.803E+00	+20.30	+1.776E-01	-2.142E+02	+1.559E-01	+6.233E-01	+1.319E-01	+0.000E-39	+1.047E+00
4	+4.162E+00	+5.418F+00	+6.868E+00	+8.819E+00	+14.00	+1.343E-01	-1.738E+02	+1.285E-01	+5.377E-01	+1.147E-01	+0.000E-39	+1.137E+00
4	+4.177E+00	+5.434E+00	+6.871E+00	+8.835E+00	+8.00	+1.004F-01	-1.350E+02	+1.042E-01	+4.464E-01	+0.974E-02	+0.000E-39	+1.258E+00
4	+4.192F+00	+5.449E+00	+6.872E+00	+8.853E+00	+2.00	+7.401F-02	-1.052E+02	+8.327E-02	+3.678E-01	+8.274E-02	+0.000E-39	+1.423E+00
4	+4.208E+00	+5.465E+00	+6.872E+00	+8.866E+00	-4.00	+5.310E-02	-8.004E+01	+6.503E-02	+2.947E-01	+6.876E-02	+0.000E-39	+1.655E+00
8	+4.223E+00	+5.481E+00	+6.870E+00	+8.882E+00	-10.30	+3.743E-02	-5.981E+01	+5.019E-02	+2.353E-01	+5.500E-02	+0.000E-39	+1.993E+00
8	+4.244E+00	+5.501E+00	+6.865E+00	+8.903E+00	-18.00	+2.269E-02	-3.921E+01	+3.375E-02	+1.674E-01	+4.011E-02	+0.000E-39	+2.770E+00
8	+4.265E+00	+5.520E+00	+6.857E+00	+8.924E+00	-25.00	+1.324E-02	-2.474E+01	+2.255E-02	+1.151E-01	+2.824E-02	+0.000E-39	+4.558E+00
8	+4.284E+00	+5.538E+00	+6.846E+00	+8.945E+00	-34.00	+7.405E-03	-1.498E+01	+1.482E-02	+7.423E-02	+1.915E-02	+0.000E-39	+1.230E+01
8	+4.303E+00	+5.555E+00	+6.833E+00	+8.965E+00	-42.00	+3.958E-03	-8.676E+00	+9.498E-03	+4.854E-02	+1.247E-02	+0.000E-39	+0.000E-39
8	+4.320F+00	+5.569E+00	+6.818E+00	+8.985E+00	-50.30	+3.598E-03	+0.000E-39	+6.395E-03	+4.527E-02	+1.175E-02	+0.000E-39	+0.000E-39
8	+4.335E+00	+5.582F+00	+6.802E+00	+9.007E+00	-58.00	+3.598E-03	+0.000E-39	+3.987E-03	+4.525E-02	+1.172E-02	+0.000E-39	+0.000E-39
8	+4.348E+00	+5.592F+00	+6.789F+00	+9.028E+00	-66.00	+3.598E-03	+0.000E-39	+3.979E-03	+4.523E-02	+1.175E-02	+0.000E-39	+0.000E-39
8	+4.358F+00	+5.599E+00	+6.763E+00	+9.049E+00	-74.30	+3.599E-03	+0.000E-39	+3.970E-03	+4.521E-02	+1.179E-02	+0.000E-39	+0.000E-39
8	+4.366E+00	+5.603E+00	+6.743F+00	+9.070E+00	-82.30	+3.598E-03	+0.000E-39	+3.963E-03	+4.519E-02	+1.181E-02	+0.000E-39	+0.000E-39
9	+4.371E+00	+5.604E+00	+6.722E+00	+9.091E+00	-90.30	+3.598E-03	+0.000E-39	+3.951E-03	+4.517E-02	+1.183E-02	+0.000E-39	+0.000E-39
9	+4.435E+00	+5.604F+00	+6.354E+00	+9.459E+00	-90.00	+3.598E-03	+0.000E-39	+2.481E-03	+4.491E-02	+1.231E-02	+0.000E-39	+0.000E-39
9	+4.499E+00	+5.604F+00	+5.986F+00	+9.827E+00	-90.30	+3.598E-03	+0.000E-39	+2.712E-03	+4.447E-02	+1.279E-02	+0.000E-39	+0.000E-39
9	+4.563E+00	+5.604E+00	+5.617F+00	+1.020E+01	-90.30	+3.598E-03	+0.000E-39	+2.543E-03	+4.414E-02	+1.327E-02	+0.000E-39	+0.000E-39
9	+4.627E+00	+5.604E+00	+5.249E+00	+1.056E+01	-90.30	+3.598E-03	+0.000E-39	+2.374E-03	+4.383E-02	+1.375E-02	+0.000E-39	+0.000E-39
9	+4.691E+00	+5.604F+00	+4.881E+00	+1.093E+01	-90.30	+3.598E-03	+0.000E-39	+2.207E-03	+4.353E-02	+1.423E-02	+0.000E-39	+0.000E-39
9	+4.755E+00	+5.604E+00	+4.513E+00	+1.130E+01	-90.30	+3.598E-03	+0.000E-39	+2.143E-03	+4.326E-02	+1.471E-02	+0.000E-39	+0.000E-39
9	+4.819F+00	+5.604E+00	+4.145E+00	+1.167E+01	-90.30	+3.598E-03	+0.000E-39	+1.873E-03	+4.297E-02	+1.519E-02	+0.000E-39	+0.000E-39
9	+4.883E+00	+5.604F+00	+3.776F+00	+1.204E+01	-90.30	+3.598E-03	+0.000E-39	+1.705E-03	+4.270E-02	+1.567E-02	+0.000E-39	+0.000E-39
9	+4.947E+00	+5.604E+00	+3.408E+00	+1.24+0E+01	-90.30	+3.598E-03	+0.000E-39	+1.538E-03	+4.245E-02	+1.615E-02	+0.000E-39	+0.000E-39

```
 IO +5.010E+00 +5.604E+00 +3.040E+00 +1.277E+01 ****** +3.598E-03 +0.000E-39 +1.372E-03 +4.220E-02 +1.663E-02 +0.000E-39 +0.000E-39
  I ST       X ST           Y ST           S ST         DTDS ST        THET ST      SECT  ALPHA
    8  +7.53842E-02  +4.27525E-01  +4.36332E-01  -8.00000E-01  +7.00000E+01     1   +20.00
  IW SN     XOW SN         YOW SN         XBW SN         YBW SN         SBW SN       THETW SN     SECT  ALPHA
   21  +4.14835E+00  +7.47990E+00  +1.41709E+00  +8.02222E+00  +8.15145E+00  +4.89372E+01     4   +20.00
  IL SN     XOL SN         YOL SN         XBL SN         YBL SN         SBL SN       THETL SN     SECT  ALPHA
   17  +8.30245E-02  +4.47960E-01  +3.07513E-01  +8.21108E-01  +8.95352E-01  +4.89372E+01     1   +20.00
 CANNOT FIND THETA FOR RW OR B, SKIP CASE
```


4697

AT ALPHA = +2.0000E+01 WINDWARD, RW = +0.0000E-39 DELS = +7.4505E-02 BETA = +0.0000E-39

SEC	XO W	XB W	YB W	SB W	THETBW	PE/PS W	DP/DS W	D_ W	QT W	RF W	DR W	XSI W
1	+7.538E-02	+0.000E-39	+0.000E-39	+0.000E-39	+90.00	+1.000E+00	+4.809E-35	+1.123E+00	+0.000E-39	+0.000E-39	+0.000E-39	+0.000E-39
1	+8.302E-02	+1.904E-04	+2.182E-02	+2.182E-02	+89.00	+9.997E-01	-1.959E+00	+1.127E+00	+3.251E-01	+2.234E-05	+0.000E-39	+0.000E-39
1	+1.081E-01	+3.045E-03	+8.720E-02	+8.727E-02	+86.00	+9.951E-01	-7.812E+00	+1.121E+00	+7.442E-01	+3.561E-04	+0.000E-39	+0.000E-39
1	+1.362E-01	+9.317E-03	+1.523E-01	+1.527E-01	+83.00	+9.851E-01	-1.359E+01	+9.593E-01	+8.049E-01	+7.923E-04	+0.000E-39	+0.000E-39
3	+1.675E-01	+1.899E-02	+2.171E-01	+2.182E-01	+80.00	+9.698E-01	+0.000E-39	+8.444E-01	+9.859E-01	+1.603F-03	+0.000E-39	+0.000E-39
3	+5.601E-01	+1.553F-01	+9.903E-01	+1.003E+00	+80.00	+9.698E-01	+0.000E-39	+3.229E-01	+7.266E-01	+7.357E-03	+0.000E-39	+0.000E-39
3	+9.527E-01	+2.917E-01	+1.764E+00	+1.789E+00	+80.00	+9.698E-01	+0.000E-39	+2.534E-01	+6.473E-01	+1.311E-02	+0.000E-39	+0.000E-39
3	+1.345E+00	+4.280E-01	+2.537E+00	+2.574E+00	+80.00	+9.698E-01	+0.000E-39	+2.197E-01	+6.018E-01	+1.887E-02	+0.000E-39	+0.000E-39
3	+1.738E+00	+5.644E-01	+3.310E+00	+3.359E+00	+80.00	+9.698E-01	+0.000E-39	+1.939E-01	+5.706E-01	+2.463E-02	+0.000E-39	+0.000E-39
3	+2.130E+00	+7.007E-01	+4.083E+00	+4.144E+00	+80.00	+9.698E-01	+0.000E-39	+1.753E-01	+5.472E-01	+3.039E-02	+0.000E-39	+0.000E-39
3	+2.523E+00	+8.371E-01	+4.857E+00	+4.929E+00	+80.00	+9.698E-01	+0.000E-39	+1.611E-01	+5.285E-01	+3.614E-02	+0.000E-39	+0.000E-39
3	+2.916E+00	+9.734E-01	+5.630E+00	+5.715E+00	+80.00	+9.698E-01	+0.000E-39	+1.493E-01	+5.131E-01	+4.190E-02	+0.000E-39	+0.000E-39
3	+3.308E+00	+1.110E+00	+6.403E+00	+6.500E+00	+80.00	+9.698E-01	+0.000E-39	+1.397E-01	+5.001E-01	+4.766F-02	+0.000E-39	+0.000E-39
3	+3.701E+00	+1.246E+00	+7.176E+00	+7.285E+00	+80.00	+9.699F-01	+0.000E-39	+1.330E-01	+4.888F-01	+5.342E-02	+0.000E-39	+0.000E-39
4	+4.093E+00	+1.382E+00	+7.950E+00	+8.070E+00	+80.00	+9.698E-01	-1.620E+32	+2.992E-01	+4.789E-01	+5.917E-02	+0.000E-39	+0.000E-39
4	+4.102E+00	+1.386E+00	+7.965E+00	+8.086E+00	+74.00	+9.240E-01	-2.479E+32	+3.536E-01	+5.734E-01	+9.178E-02	+0.000E-39	+0.000E-39
4	+4.112E+00	+1.391E+00	+7.980E+00	+8.102E+00	+68.00	+8.597E-01	-3.249E+32	+4.053E-01	+8.248E-01	+1.204E-01	+0.000E-39	+0.000E-39
4	+4.123E+00	+1.398E+00	+7.994E+00	+8.117E+00	+62.00	+7.796E-01	-3.878E+32	+4.357E-01	+9.323F-01	+1.436E-01	+0.000E-39	+0.000E-39
4	+4.135E+00	+1.406E+00	+8.008E+00	+8.133E+00	+56.00	+6.873E-01	-4.337E+32	+4.464E-01	+9.946E-01	+1.603E-01	+0.000E-39	+0.000E-39
4	+4.148E+00	+1.415E+00	+8.020E+00	+8.149E+00	+50.00	+5.868E-01	-4.606E+32	+4.375E-01	+1.011E+00	+1.697E-01	+0.000E-39	+0.000E-39
4	+4.148E+00	+1.417E+00	+8.022E+00	+8.151E+00	+48.94	+5.685E-01	-4.633E+32	+4.413E-01	+1.000E+00	+1.705E-01	+0.000E-39	+0.000E-39
4	+4.162E+00	+1.426E+00	+8.032E+00	+8.164E+00	+44.00	+4.844E-01	-4.675E+32	+4.122E-01	+9.833F-01	+1.711E-01	+0.000E-39	+0.000E-39
4	+4.177E+00	+1.438E+00	+8.042E+00	+8.180E+00	+38.00	+3.813E-01	-4.539E+32	+3.566E-01	+9.131E-01	+1.646E-01	+0.000E-39	+0.000E-39
4	+4.192E+00	+1.451E+00	+8.051E+00	+8.195E+00	+32.00	+2.981E-01	-3.310E+32	+3.094E-01	+8.239E-01	+1.529E-01	+0.000E-39	+0.000E-39
4	+4.208E+00	+1.464E+00	+8.059E+00	+8.212E+00	+26.00	+2.309E-01	-2.655E+32	+2.650E-01	+7.273E-01	+1.385E-01	+0.000E-39	+0.000E-39
8	+4.223E+00	+1.479E+00	+8.065E+00	+8.227E+00	+20.00	+1.776E-01	-2.142E+32	+2.160E-01	+6.317E-01	+1.232E-01	+0.000E-39	+0.000E-39
8	+4.244E+00	+1.499E+00	+8.070E+00	+8.248E+00	+12.00	+1.226E-01	-1.587E+32	+1.527E-01	+5.096E-01	+1.022E-01	+0.000E-39	+0.000E-39
8	+4.265E+00	+1.520E+00	+8.073E+00	+8.269E+00	+4.30	+8.230E-02	-1.148E+32	+1.201E-01	+3.987E-01	+8.219E-02	+0.000E-39	+0.000E-39
8	+4.284E+00	+1.541E+00	+8.073E+00	+8.290E+00	-4.00	+5.341E-02	-8.043E+31	+9.591E-02	+3.019F-01	+6.387E-02	+0.000E-39	+0.000E-39
8	+4.303E+00	+1.561E+00	+8.070E+00	+8.311E+00	-12.00	+3.367E-02	-5.472E+31	+5.996E-02	+2.220E-01	+4.816E-02	+0.000E-39	+0.000E-39
8	+4.320E+00	+1.581E+00	+8.065E+00	+8.332E+00	-20.00	+2.039E-02	-3.580E+31	+3.646E-02	+1.576E-01	+3.503E-02	+0.000E-39	+0.000E-39
8	+4.335E+00	+1.601E+00	+8.056E+00	+8.353E+00	-28.00	+1.194E-02	-2.254E+31	+2.671E-02	+1.084F-01	+2.467E-02	+0.000E-39	+0.000E-39
8	+4.348E+00	+1.618E+00	+8.045E+00	+8.374E+00	-36.00	+6.728E-03	-1.379E+31	+1.721E-02	+7.212E-02	+1.679E-02	+0.000E-39	+0.000E-39
8	+4.358E+00	+1.634E+00	+8.032E+00	+8.395E+00	-44.70	+3.627E-03	-8.037E+30	+1.081E-02	+4.616F-02	+1.093F-02	+0.000E-39	+0.000E-39
8	+4.366E+00	+1.648E+00	+8.016E+00	+8.415E+00	-52.00	+3.598E-03	+0.000E-39	+4.915E-03	+4.587E-02	+1.795E-02	+0.000E-39	+0.000E-39
9	+4.371E+00	+1.660E+00	+7.999E+00	+8.437E+00	-60.00	+3.598E-03	+0.000E-39	+4.904E-03	+4.585E-02	+1.798E-02	+0.000E-39	+0.000E-39
9	+4.435E+00	+1.844E+00	+7.680E+00	+8.805E+00	-60.00	+3.598E-03	+0.000E-39	+4.697E-03	+4.566E-02	+1.146E-02	+0.000E-39	+0.000E-39
9	+4.499E+00	+2.028E+00	+7.361E+00	+9.173E+00	-60.00	+3.598E-03	+0.000E-39	+4.493E-03	+4.539E-02	+1.194E-02	+0.000E-39	+0.000E-39
9	+4.563E+00	+2.212F+00	+7.042E+00	+9.541E+00	-60.00	+3.598E-03	+0.000E-39	+4.289E-03	+4.479E-02	+1.242E-02	+0.000E-39	+0.000E-39
9	+4.627E+00	+2.396E+00	+6.723E+00	+9.909E+00	-60.00	+3.598F-03	+0.000E-39	+4.088E-03	+4.440E-02	+1.290E-02	+0.000E-39	+0.000E-39
9	+4.691E+00	+2.581E+00	+6.404E+00	+1.028E+01	-60.00	+3.598E-03	+0.000E-39	+3.888E-03	+4.407E-02	+1.338E-02	+0.000E-39	+0.000E-39
9	+4.755E+00	+2.765E+00	+6.085E+00	+1.065E+01	-60.00	+3.598E-03	+0.000E-39	+3.537E-03	+4.375E-02	+1.386E-02	+0.000E-39	+0.000E-39
9	+4.819E+00	+2.949E+00	+5.767E+00	+1.101E+01	-60.00	+3.598E-03	+0.000E-39	+3.491E-03	+4.347E-02	+1.434E-02	+0.000E-39	+0.000E-39
9	+4.883E+00	+3.133E+00	+5.448E+00	+1.138F+01	-60.00	+3.598E-03	+0.000E-39	+3.294E-03	+4.318E-02	+1.482E-02	+0.000E-39	+0.000E-39
9	+4.947E+00	+3.317E+00	+5.129E+00	+1.175E+01	-60.00	+3.598E-03	+0.000E-39	+3.098E-03	+4.291E-02	+1.530E-02	+0.000E-39	+0.000E-39
10	+5.010E+00	+3.501E+00	+4.810E+00	+1.212E+01	-70.00	+3.598E-03	+0.000E-39	+2.902E-03	+4.265E-02	+1.577F-02	+0.000E-39	+0.000E-39
10	+5.010E+00	+3.629E+00	+4.453E+00	+1.249E+01	-70.00	+3.598E-03	+0.000E-39	+2.537E-03	+4.239E-02	+1.626E-02	+0.000E-39	+0.000E-39
10	+5.010E+00	+3.758F+00	+4.105E+00	+1.287E+01	-70.00	+3.598E-03	+0.000E-39	+2.473E-03	+4.214F-02	+1.675E-02	+0.000E-39	+0.000E-39
10	+5.010E+00	+3.886E+00	+3.753E+00	+1.324E+01	-70.00	+3.598E-03	+0.000E-39	+2.265E-03	+4.189E-02	+1.724E-02	+0.000E-39	+0.000E-39
10	+5.010E+00	+4.014E+00	+3.400E+00	+1.362E+01	-70.00	+3.598E-03	+0.000E-39	+2.045E-03	+4.166E-02	+1.773E-02	+0.000E-39	+0.000E-39
10	+5.010F+00	+4.142E+00	+3.048E+00	+1.399E+01	-70.00	+3.598E-03	+0.000E-39	+1.834E-03	+4.144E-02	+1.822E-02	+0.000E-39	+0.000E-39
10	+5.010E+00	+4.271E+00	+2.696E+00	+1.437E+01	-70.00	+3.598F-03	+0.000E-39	+1.621E-03	+4.122E-02	+1.870E-02	+0.000E-39	+0.000E-39
10	+5.010E+00	+4.399F+00	+2.343F+00	+1.474E+01	-70.00	+3.598E-03	+0.000E-39	+1.405E-03	+4.101E-02	+1.919E-02	+0.000E-39	+0.000E-39
10	+5.010E+00	+4.527E+00	+1.991E+00	+1.512E+01	-70.00	+3.598F-03	+0.000E-39	+1.197E-03	+4.080E-02	+1.968F-02	+0.000E-39	+0.000E-39
10	+5.010E+00	+4.655E+00	+1.639E+00	+1.549E+01	-70.00	+3.598F-03	+0.000E-39	+9.849E-04	+4.060E-02	+2.017E-02	+0.000E-39	+0.000E-39
10	+5.010E+00	+4.784E+00	+1.286E+00	+1.587E+01	-70.00	+3.598F-03	+0.000E-39	+7.730E-04	+4.041E-02	+2.066E-02	+0.000E-39	+0.000E-39

```
10 +5.010E+00 +4.912E+00 +9.338E-01 +1.624E+01 -70.00 +3.598E-03 +0.000E-39 +5.512E-04 +4.022E-02 +2.114E-02 +0.000E-39 +0.000E-39
10 +5.010E+00 +5.040E+00 +5.814E-01 +1.562E+01 -70.00 +3.598E-03 +0.000E-39 +3.439E-04 +4.004E-02 +2.163E-02 +0.000E-39 +0.000E-39
10 +5.010E+00 +5.168E+00 +2.290E-01 +1.599E+01 -70.00 +3.598E-03 +0.000E-39 +1.376E-04 +3.984E-02 +2.212E-02 +0.000E-39 +0.000E-39
10 +5.010E+00 +5.297E+00 +1.234E-01 +1.737E+01 -70.00 +3.598E-03 +0.000E-39 +7.415E-05 +3.968E-02 +2.251E-02 +0.000E-39 +0.000E-39
```

AT ALPHA = +2.0000E+01, LEEWARD, RW = +1.5237E+00 DELS = +7.4505E-09 BSHOCK = +5.6718E-01

SEC	XO L	XB L	YA L	SB L	THETRL	PF/PS L	DP/DS L	RL L	QT L	RF L	QR L	XST L
1	+7.538E-02	+0.000E-39	+0.000E-39	+0.000E-39	+90.00	+1.000E+00	+4.809E-05	+1.123E+00	+0.000E-39	+0.000E-39	+8.197E-01	+7.450E-02
1	+6.118E-02	+7.615E-04	+4.362E-02	+4.353E-02	+88.30	+9.988E-01	-3.915E+00	+1.125E+00	+4.395E-01	+7.745E-05	+7.090E-01	+7.461E-02
1	+4.259E-02	+4.757E-03	+1.089E-01	+1.091E-01	+85.00	+9.924E-01	-9.747E+00	+1.113E+00	+7.579E-01	+4.819E-04	+6.091E-01	+7.517E-02
1	+2.732E-02	+1.216E-02	+1.740E-01	+1.745E-01	+82.00	+9.806E-01	-1.547E+01	+9.575E-01	+8.492E-01	+1.032E-03	+4.480E-01	+7.626E-02
1	+1.539E-02	+2.297E-02	+2.385E-01	+2.400E-01	+79.00	+9.636E-01	-2.103E+01	+9.755E-01	+1.339E+00	+1.927E-03	+2.065E-01	+7.793E-02
1	+6.848E-03	+3.713E-02	+3.024E-01	+3.054E-01	+76.00	+9.415E-01	-2.635E+01	+9.730E-01	+1.181E+00	+3.073E-03	+8.028E-02	
1	+1.713E-03	+5.462E-02	+3.655E-01	+3.739E-01	+73.00	+9.145E-01	-3.139E+01	+9.635E-01	+1.330E+00	+4.442E-03	+0.000E-39	+8.343E-02
1	+0.000E-39	+7.538E-02	+4.275E-01	+4.353E-01	+70.00	+8.830E-01	-3.608E+01	+9.415E-01	+1.397E+00	+6.003E-03	+0.000E-39	+8.750E-02
1	+1.713E-03	+9.937E-02	+4.884E-01	+5.018E-01	+67.00	+8.473E-01	-4.038E+01	+9.175E-01	+1.475E+00	+7.718E-03	+0.000E-39	+9.265E-02
1	+6.848E-03	+1.265E-01	+5.480E-01	+5.672E-01	+64.00	+8.078E-01	-4.423E+01	+8.994E-01	+1.535E+00	+9.547E-03	+0.000E-39	+9.902E-02
1	+1.539E-02	+1.567E-01	+6.060E-01	+6.327E-01	+61.00	+7.650E-01	-4.750E+01	+8.575E-01	+1.576E+00	+1.144E-02	+0.000E-39	+1.069E-01
1	+2.732E-02	+1.899E-01	+6.624E-01	+6.981E-01	+58.00	+7.192E-01	-5.045E+01	+8.223E-01	+1.599E+00	+1.335E-02	+0.000E-39	+1.161E-01
1	+4.259E-02	+2.261E-01	+7.170E-01	+7.635E-01	+55.00	+6.710E-01	-5.274E+01	+7.843E-01	+1.606E+00	+1.524E-02	+0.000E-39	+1.273E-01
1	+6.118E-02	+2.650E-01	+7.696E-01	+8.290E-01	+52.00	+6.210E-01	-5.445E+01	+7.429E-01	+1.596E+00	+1.705E-02	+0.000E-39	+1.403E-01
1	+7.538E-02	+3.024E-01	+8.035E-01	+8.727E-01	+50.00	+5.868E-01	-5.528E+01	+7.147E-01	+1.581E+00	+1.817E-02	+0.000E-39	+1.502E-01
1	+8.302E-02	+3.066E-01	+8.201E-01	+8.945E-01	+49.00	+5.696E-01	-5.558E+01	+7.005E-01	+1.570E+00	+1.871E-02	+0.000E-39	+1.555E-01
1	+8.302E-02	+3.075E-01	+8.211E-01	+8.959E-01	+48.94	+5.685E-01	-5.560E+01	+7.001E-01	+1.570E+00	+1.874E-02	+0.000E-39	+1.558E-01
1	+1.081E-01	+3.508E-01	+8.683E-01	+9.599E-01	+46.00	+5.192E-01	-5.610E+01	+6.834E-01	+1.580E+00	+2.018E-02	+0.000E-39	+1.731E-01
1	+1.362E-01	+3.975E-01	+9.142E-01	+1.025E+00	+43.00	+4.670E-01	-5.599E+01	+6.755E-01	+1.476E+00	+2.142E-02	+0.000E-39	+1.932E-01
3	+1.675E-01	+4.465E-01	+9.576E-01	+1.091E+00	+40.30	+4.153E-01	+0.000E-39	+5.145E-01	+1.438E+00	+2.237E-02	+0.000E-39	+2.163E-01
3	+5.601E-01	+1.048E+00	+1.462E+00	+1.876E+00	+40.00	+4.153E-01	+0.000E-39	+3.356E-01	+1.763E+00	+3.848E-02	+0.000E-39	+4.017E-01
3	+9.527E-01	+1.650E+00	+1.967E+00	+2.661E+00	+40.00	+4.153E-01	+0.000E-39	+3.229E-01	+1.178E+00	+5.458E-02	+0.000E-39	+5.098E-01
3	+1.345E+00	+2.251E+00	+2.472E+00	+3.445E+00	+40.00	+4.153E-01	+0.000E-39	+2.933E-01	+1.118E+00	+7.068E-02	+0.000E-39	+6.794E-01
3	+1.738E+00	+2.852E+00	+2.976E+00	+4.232E+00	+40.00	+4.153E-01	+0.000E-39	+2.671E-01	+1.073E+00	+8.679E-02	+0.000E-39	+6.269E-01
3	+2.130E+00	+3.454E+00	+3.481E+00	+5.017E+00	+40.00	+4.153E-01	+0.000E-39	+2.470E-01	+1.037E+00	+1.029E-01	+0.000E-39	+6.604E-01
3	+2.523E+00	+4.055E+00	+3.986E+00	+5.802E+00	+40.30	+4.153E-01	+0.000E-39	+2.339E-01	+1.008E+00	+1.193E-01	+0.000E-39	+6.846E-01
3	+2.916E+00	+4.657E+00	+4.491E+00	+6.587E+00	+40.00	+4.153E-01	+0.000E-39	+2.175E-01	+9.825E-01	+1.351E-01	+0.000E-39	+7.021E-01
3	+3.308E+00	+5.258E+00	+4.995E+00	+7.372E+00	+40.00	+4.153E-01	+0.000E-39	+2.053E-01	+9.606E-01	+1.512E-01	+0.000E-39	+7.147E-01
3	+3.701E+00	+5.860E+00	+5.500E+00	+8.158E+00	+40.00	+4.153E-01	+0.000E-39	+1.957E-01	+9.413E-01	+1.673E-01	+0.000E-39	+7.236E-01
4	+4.093E+00	+6.461E+00	+6.005E+00	+8.943E+00	+40.00	+4.153E-01	+0.000E-39	+1.883E-01	+9.242E-01	+1.834E-01	+0.000E-39	+7.297E-01
4	+4.102E+00	+6.474E+00	+6.014E+00	+8.959E+00	+34.00	+3.152E-01	-4.337E+02	+2.543E-01	+8.798E-01	+1.704E-01	+0.000E-39	+7.351E-01
4	+4.112E+00	+6.487E+00	+6.022E+00	+8.974E+00	+28.00	+2.457E-01	-2.797E+02	+2.152E-01	+7.374E-01	+1.554E-01	+0.000E-39	+7.505E-01
4	+4.123E+00	+6.502E+00	+6.029E+00	+8.990E+00	+22.00	+1.890E-01	-2.253E+02	+1.834E-01	+6.423E-01	+1.386E-01	+0.000E-39	+7.767E-01
4	+4.135E+00	+6.517E+00	+6.034E+00	+9.006E+00	+16.00	+1.440E-01	-1.808E+02	+1.488E-01	+5.506E-01	+1.214E-01	+0.000E-39	+8.153E-01
4	+4.148E+00	+6.532E+00	+6.038E+00	+9.021E+00	+10.50	+1.081E-01	-1.433E+02	+1.209E-01	+4.638E-01	+1.045E-01	+0.000E-39	+8.689E-01
4	+4.162E+00	+6.547E+00	+6.039E+00	+9.037E+00	+4.30	+8.001E-02	-1.122E+02	+9.710E-02	+3.848E-01	+8.838E-02	+0.000E-39	+9.415E-01
4	+4.177E+00	+6.563E+00	+6.040E+00	+9.053E+00	-2.00	+5.769E-02	-8.573E+01	+7.501E-02	+3.119E-01	+7.305E-02	+0.000E-39	+1.039E+00
4	+4.192E+00	+6.579E+00	+6.038E+00	+9.068E+00	-8.00	+4.102E-02	-6.456E+01	+5.702E-02	+2.491E-01	+5.944E-02	+0.000E-39	+1.171E+00
4	+4.208E+00	+6.594E+00	+6.035E+00	+9.084E+00	-14.00	+2.867E-02	-4.733E+01	+4.525E-02	+1.956E-01	+4.755E-02	+0.000E-39	+1.355F+00
8	+4.223E+00	+6.609E+00	+6.031E+00	+9.100E+00	-20.00	+1.956E-02	-3.456E+01	+3.407E-02	+1.505E-01	+3.723E-02	+0.000E-39	+1.621E+00
8	+4.244E+00	+6.628E+00	+6.022E+00	+9.121E+00	-28.00	+1.139E-02	-2.175E+01	+2.225E-02	+1.031E-01	+2.611E-02	+0.000E-39	+2.215E+00
8	+4.265E+00	+6.646E+00	+6.011E+00	+9.142E+00	-36.00	+6.378E-03	-1.316E+01	+1.459E-02	+6.820E-02	+1.767E-02	+0.000E-39	+3.507E+00
8	+4.284E+00	+6.662E+00	+5.998E+00	+9.163E+00	-44.00	+3.598E-03	+0.000E-39	+3.452E-03	+4.510E-02	+1.193E-02	+0.000E-39	+8.098E+00
8	+4.303E+00	+6.676E+00	+5.982E+00	+9.184E+00	-52.00	+3.598E-03	+0.000E-39	+3.443E-03	+4.508E-02	+1.195E-02	+0.000E-39	+0.000E-39
8	+4.320E+00	+6.688E+00	+5.965E+00	+9.205E+00	-60.30	+3.598E-03	+0.000E-39	+3.433E-03	+4.506E-02	+1.198E-02	+0.000E-39	+0.000E-39
8	+4.335E+00	+6.697E+00	+5.946E+00	+9.225E+00	-68.00	+3.598E-03	+0.000E-39	+3.422E-03	+4.504E-02	+1.201E-02	+0.000E-39	+0.000E-39
8	+4.348E+00	+6.703E+00	+5.926E+00	+9.246E+00	-76.00	+3.598E-03	+0.000E-39	+3.410E-03	+4.502E-02	+1.204E-02	+0.000E-39	+0.000E-39
8	+4.358E+00	+6.707E+00	+5.905E+00	+9.267E+00	-84.00	+3.598E-03	+0.000E-39	+3.398E-03	+4.500E-02	+1.206E-02	+0.000E-39	+0.000E-39
8	+4.366E+00	+6.708E+00	+5.885E+00	+9.288E+00	-92.00	+3.598E-03	+0.000E-39	+3.386E-03	+4.498E-02	+1.209E-02	+0.000E-39	+0.000E-39

I ST	X ST	Y ST	S ST	DTDS ST	THET ST	SECT	ALPHA
16	+2.13046E+00	+4.02500E+00	+4.58048E+00	+0.00000E-39	+5.00000E+01	3	+30.00

IW SN	XOW SN	YOW SN	XBW SN	YBW SN	SBW SN	THETW SN	SECT	ALPHA

IL SN	XOL SN	YOL SN	XBL SN	YBL SN	SBL SN	THETL SN	SECT	ALPHA
13	+4.16234E+00	+7.48703E+00	+3.69015E-02	+4.02451E+00	+4.03348E+00	+4.89372E+01	4	+30.00
20	+1.53896E-02	+1.95543E-01	+3.07513E-01	+4.74709E+00	+4.82183E+00	+4.89372E+01	1	+30.00

AT ALPHA = +3.0000E+01 WINDWARD, RW = +1.3235E+01 DELS = +1.3815E+00 3S4TJ(= -7.7105E+0?
THETAW LESS THAN LIMIT

SEC	XO W	XB W	YB W	SB W	THETBW	PE/PS W	DP/DS W	DL W	DT W	DE W	DR W	XSI W
3	+2.130F+00	+0.000E-39	+0.000E-39	+0.000E-39	+90.00	+1.000E+00	+4.839E-05	+1.717E-01	+0.000E-39	+0.000E-39	+1.520E+01	+1.381E+00
3	+2.523E+00	-7.451E-09	+7.852E-01	+7.852E-01	+90.00	+9.978E-01	-4.946E-01	+1.713E-01	+2.408E-01	+1.353E-03	+1.238E+01	+1.358E+00
3	+2.916E+00	-2.235E-08	+1.570E+00	+1.570E+00	+90.00	+9.845E-01	-2.134E-01	+1.590E-01	+3.613E-01	+5.349E-03	+8.497E+00	+1.286E+00
3	+3.308E+00	-1.490E-08	+2.356E+00	+2.355E+00	+90.00	+9.400E-01	-5.262E-01	+2.594E-01	+7.321E-01	+2.397E-02	+0.000E-39	+1.157E+00
3	+3.701E+00	-1.490E-08	+3.141E+00	+3.141E+00	+90.00	+8.309E-01	-1.392E+01	+2.597E-01	+1.053E+00	+5.032E-02	+0.000E-39	+9.561E-01
4	+4.093E+00	+0.000E-39	+3.926E+00	+3.926E+00	+90.00	+6.105E-01	-2.633E+01	+2.518E-01	+1.170E+00	+8.108E-02	+0.000E-39	+6.384E-01
4	+4.102E+00	+8.217E-04	+3.942E+00	+3.942E+00	+84.00	+6.046E-01	-2.657E+01	+2.537E-01	+1.170E+00	+8.163E-02	+0.000E-39	+6.001E-01
4	+4.112E+00	+3.278E-03	+3.957E+00	+3.957E+00	+78.00	+5.985E-01	-2.698E+01	+2.527E-01	+1.169E+00	+8.210E-02	+0.000E-39	+5.706E-01
4	+4.123E+00	+7.341E-03	+3.972E+00	+3.973E+00	+72.00	+5.925E-01	-2.729E+01	+2.515E-01	+1.168E+00	+8.259E-02	+0.000E-39	+5.486E-01
4	+4.135E+00	+1.297E-02	+3.987E+00	+3.989E+00	+66.00	+5.864E-01	-2.760E+01	+2.525E-01	+1.166E+00	+8.307E-02	+0.000E-39	+5.331E-01
4	+4.148E+00	+2.010E-02	+4.001E+00	+4.005E+00	+60.00	+5.801E-01	-2.792E+01	+2.493E-01	+1.165E+00	+8.354E-02	+0.000E-39	+5.233E-01
4	+4.162E+00	+2.865E-02	+4.014E+00	+4.020E+00	+54.00	+5.739E-01	-2.826E+01	+2.489E-01	+1.163E+00	+8.400E-02	+0.000E-39	+5.187E-01
4	+4.162E+00	+3.690E-02	+4.025E+00	+4.033E+00	+48.94	+5.685E-01	-2.851E+01	+2.493E-01	+1.162E+00	+8.438E-02	+0.000E-39	+5.188E-01
4	+4.177E+00	+3.853E-02	+4.026E+00	+4.036E+00	+48.00	+5.539E-01	-4.652E+02	+3.166E+00	+1.159E+00	+8.469E-02	+0.000E-39	+5.191E-01
4	+4.192E+00	+4.963E-02	+4.037E+00	+4.052E+00	+42.00	+4.497E-01	-4.652E+02	+2.373E-01	+1.157E+00	+8.424E-02	+0.000E-39	+5.242E-01
4	+4.208E+00	+6.183E-02	+4.047E+00	+4.067E+00	+36.00	+3.478E-01	-4.449E+02	+2.323E-01	+1.713E+00	+7.981E-02	+0.000E-39	+5.338E-01
8	+4.223E+00	+7.500E-02	+4.056E+00	+4.083E+00	+30.00	+2.706E-01	-3.037E+02	+2.339E-01	+9.959E-01	+7.347E-02	+0.000E-39	+5.475E-01
8	+4.244E+00	+9.381E-02	+4.065E+00	+4.104E+00	+22.00	+1.916E-01	-2.278E+02	+1.535E-01	+7.659E-01	+6.368E-02	+0.000E-39	+5.721E-01
8	+4.265E+00	+1.137F-01	+4.072E+00	+4.125E+00	+14.00	+1.326E-01	-1.691E+02	+1.249E-01	+6.113E-01	+5.322E-02	+0.000E-39	+6.026E-01
8	+4.284E+00	+1.343E-01	+4.075E+00	+4.145E+00	+6.00	+8.916E-02	-1.225E+02	+9.214E-02	+4.813E-01	+4.313E-02	+0.000E-39	+6.367E-01
8	+4.303E+00	+1.552E-01	+4.076E+00	+4.167E+00	-2.00	+5.814E-02	-8.627E+01	+5.539E-02	+3.643E-01	+3.378E-02	+0.000E-39	+6.712E-01
8	+4.320E+00	+1.760E-01	+4.074E+00	+4.188E+00	-10.00	+3.660E-02	-5.859E+01	+4.518E-02	+2.694E-01	+2.557E-02	+0.000E-39	+7.023E-01
8	+4.335E+00	+1.964E-01	+4.069E+00	+4.209E+00	-18.00	+2.220E-02	-3.849E+01	+3.115E-02	+1.916E-01	+1.877E-02	+0.000E-39	+0.000E-39
8	+4.348E+00	+2.158E-01	+4.061E+00	+4.230E+00	-26.00	+1.296E-02	-2.431E+01	+2.345E-02	+1.317E-01	+1.321E-02	+0.000E-39	+0.000E-39
8	+4.358E+00	+2.339E-01	+4.050E+00	+4.251E+00	-34.00	+7.264E-03	-1.474E+01	+1.325E-02	+8.725E-02	+8.981E-03	+0.000E-39	+0.000E-39
8	+4.366E+00	+2.504E-01	+4.037E+00	+4.272E+00	-42.00	+3.889E-03	-8.544E+00	+8.127E-03	+5.559E-02	+5.873E-03	+0.000E-39	+0.000E-39
9	+4.371E+00	+2.649E-01	+4.022E+00	+4.293E+00	-50.00	+3.598E-03	+3.000E-39	+3.579E-03	+3.248E-02	+3.587E-03	+0.000E-39	+0.000E-39
9	+4.435E+00	+5.016E-01	+3.740E+00	+4.561E+00	-50.00	+3.598E-03	+3.000E-39	+3.320E-03	+5.143E-02	+6.067E-03	+0.000E-39	+0.000E-39
9	+4.499E+00	+7.383E-01	+3.458E+00	+5.029E+00	-50.00	+3.598E-03	+3.000E-39	+3.063E-03	+5.995E-02	+6.565E-03	+0.000E-39	+0.000E-39
9	+4.563E+00	+9.749E-01	+3.176E+00	+5.397E+00	-50.00	+3.598E-03	+3.000E-39	+2.838E-03	+5.013E-02	+7.095E-03	+0.000E-39	+0.000E-39
9	+4.627E+00	+1.212E+00	+2.894E+00	+5.765E+00	-50.00	+3.598E-03	+3.000E-39	+2.555E-03	+4.943E-02	+7.605E-03	+0.000E-39	+0.000E-39
9	+4.691E+00	+1.448E+00	+2.612E+00	+6.133E+00	-50.00	+3.598E-03	+3.000E-39	+2.373E-03	+4.897E-02	+7.994E-03	+0.000E-39	+0.000E-39
9	+4.755E+00	+1.685E+00	+2.330E+00	+6.502E+00	-50.00	+3.598E-03	+3.000E-39	+2.052E-03	+4.830E-02	+8.443E-03	+0.000E-39	+0.000E-39
9	+4.819E+00	+1.922E+00	+2.048E+00	+6.870E+00	-50.00	+3.598E-03	+3.000E-39	+1.832E-03	+4.777E-02	+8.742E-03	+0.000E-39	+0.000E-39
9	+4.883E+00	+2.158E+00	+1.766E+00	+7.238E+00	-50.00	+3.598E-03	+3.000E-39	+1.533E-03	+4.728E-02	+9.492E-03	+0.000E-39	+0.000E-39
9	+4.947E+00	+2.395E+00	+1.484E+00	+7.606E+00	-50.00	+3.598E-03	+3.000E-39	+1.305E-03	+4.691E-02	+9.901E-03	+0.000E-39	+0.000E-39
10	+5.010E+00	+2.632E+00	+1.202E+00	+7.974E+00	-60.00	+3.598E-03	+0.000E-39	+1.055E-03	+4.637E-02	+1.038E-02	+0.000E-39	+0.000E-39
10	+5.010E+00	+2.819E+00	+8.771E-01	+8.349E+00	-69.00	+3.598E-03	+0.000E-39	+7.737E-04	+4.594E-02	+1.087E-02	+0.000E-39	+0.000E-39
10	+5.010E+00	+3.007E+00	+5.523E-01	+8.724E+00	-60.00	+3.598E-03	+0.000E-39	+4.853E-04	+4.554E-02	+1.136E-02	+0.000E-39	+0.000E-39
10	+5.010E+00	+3.194E+00	+2.276E-01	+9.099E+00	-60.00	+3.598E-03	+0.000E-39	+1.993E-04	+4.514E-02	+1.186E-02	+0.000E-39	+0.000E-39
10	+5.010E+00	+3.382E+00	+9.720E-02	+9.474E+00	-60.00	+3.598E-03	+0.000E-39	+8.541E-05	+4.489E-02	+1.233E-02	+0.000E-39	+0.000E-39

AT ALPHA = +3.0000E+01, LEEWARD, RW = +1.5081F+01 DELS = +1.3815E+00 BSHOCK = -1.5338E+00
THETAW LESS THAN LIMIT

SEC	XO L	XB L	YB L	SB L	THETBL	PE/PS L	DP/DS L	QL L	QT L	RE L	QR L	XST L
3	+2.130E+00	+0.000F-39	+0.000E-39	+0.000E-39	+90.00	+1.000F+00	+4.809E-06	+1.717E-01	+0.000F-39	+0.000E-39	+1.520E+01	+1.381E+00
3	+1.738E+00	-0.000E-39	+7.852E-01	+7.852E-01	+90.00	+9.985E-01	-3.096E-01	+1.714E-01	+2.111E-31	+1.149E-03	+1.261E+01	+1.361E+00
3	+1.345E+00	-0.000E-39	+1.570E+00	+1.570E+00	+90.00	+9.909E-01	-1.202E+00	+1.701E-01	+3.181E-01	+4.566E-03	+1.016E+01	+1.299E+00
3	+9.527E-01	-0.000E-39	+2.356E+00	+2.355E+00	+90.00	+9.673E-01	-3.251E+00	+2.412E-01	+6.320E-01	+1.797E-02	+4.003E+00	+1.196E+00
3	+5.601E-01	-0.000E-39	+3.141E+00	+3.141E+00	+90.00	+9.114E-01	-7.070E+00	+2.591E-01	+8.584E-01	+3.823E-02	+0.000E-39	+1.049E+00
3	+1.675E-01	-0.000E-39	+3.926E+00	+3.926E+00	+90.00	+8.003E-01	-1.321E+01	+2.577E-01	+1.052E+00	+5.703E-02	+0.000E-39	+8.565E-01
1	+1.362E-01	+1.713E-03	+3.991E+00	+3.991E+00	+87.00	+7.877E-01	-1.385E+01	+2.588E-01	+1.065E+00	+6.968E-02	+0.000E-39	+8.289E-01
1	+1.081E-01	+6.848E-03	+4.057E+00	+4.057E+00	+84.00	+7.745E-01	-1.450E+01	+2.595E-01	+1.077E+00	+7.235E-02	+0.000E-39	+8.068E-01
1	+8.302E-02	+1.539E-02	+4.122E+00	+4.122E+00	+81.00	+7.607E-01	-1.518E+01	+2.679E-01	+1.087F+00	+7.502E-02	+0.000E-39	+7.898E-01
1	+6.118E-02	+2.732E-02	+4.186E+00	+4.188E+00	+78.00	+7.462E-01	-1.588E+01	+2.571E-01	+1.097E+00	+7.769E-02	+0.000E-39	+7.778E-01
1	+4.259E-02	+4.259E-02	+4.250E+00	+4.253E+00	+75.00	+7.310E-01	-1.660E+01	+2.565E-01	+1.106F+00	+8.035E-02	+0.000E-39	+7.706E-01
1	+2.732E-02	+6.118E-02	+4.312E+00	+4.319E+00	+72.00	+7.152E-01	-1.734E+01	+2.645E-01	+1.113E+00	+8.299E-02	+0.000E-39	+7.682E-01
1	+1.539E-02	+8.302E-02	+4.374E+00	+4.384E+00	+69.00	+6.987F-01	-1.810E+01	+2.629E-01	+1.120E+00	+8.559E-02	+0.000E-39	+7.706E-01
1	+6.848E-03	+1.081E-01	+4.434E+00	+4.453E+00	+66.00	+6.814E-01	-1.889E+01	+2.609E-01	+1.125E+00	+8.814E-02	+0.000E-39	+7.777E-01
1	+1.713E-03	+1.362E-01	+4.493E+00	+4.515E+00	+63.00	+6.634E-01	-1.970E+01	+2.585E-01	+1.128E+00	+9.062E-02	+0.000E-39	+7.895E-01
1	+0.000E-39	+1.675E-01	+4.551E+00	+4.580E+00	+60.00	+6.447E-01	-2.053E+01	+2.558E-01	+1.130E+00	+9.303E-02	+0.000E-39	+8.065E-01
1	+1.713E-03	+2.017E-01	+4.607E+00	+4.645E+00	+57.00	+6.251E-01	-2.139E+01	+2.525E-01	+1.130E+00	+9.534E-02	+0.000E-39	+8.285E-01
1	+6.848E-03	+2.387E-01	+4.661E+00	+4.711E+00	+54.00	+6.048E-01	-2.227E+01	+2.491E-01	+1.129E+00	+9.752E-02	+0.000E-39	+8.559E-01
1	+1.539E-02	+2.786E-01	+4.713E+00	+4.777E+00	+51.00	+5.836E-01	-2.317E+01	+2.451E-01	+1.125E+00	+9.956E-02	+0.000E-39	+8.889E-01
1	+1.539E-02	+3.075E-01	+4.747E+00	+4.822E+00	+48.94	+5.685E-01	-2.331E+01	+2.422E-01	+1.121F+00	+1.009E-01	+0.000E-39	+9.151E-01
1	+2.732E-02	+3.211E-01	+4.762E+00	+4.842E+00	+48.00	+5.539E-01	-5.532E+01	+2.523E-01	+1.117E+00	+1.016E-01	+0.000E-39	+9.279E-01
1	+4.259E-02	+3.661E-01	+4.810E+00	+4.908E+00	+45.00	+5.018E-01	-5.613E+01	+2.414E-01	+1.097F+00	+1.031E-01	+0.000E-39	+9.734E-01
1	+6.118E-02	+4.136E-01	+4.855E+00	+4.973E+00	+42.00	+4.497E-01	-5.532E+01	+2.290E-01	+1.065E+00	+1.034E-01	+0.000E-39	+1.026E+00
1	+8.302E-02	+4.633E-01	+4.897E+00	+5.039E+00	+39.00	+3.982E-01	-5.490E+01	+2.143E-01	+1.022E+00	+1.024E-01	+0.000E-39	+1.086E+00
1	+1.081E-01	+5.153E-01	+4.937E+00	+5.104E+00	+36.00	+3.515E-01	-4.658E+01	+1.972E-01	+9.723E-01	+1.005E-01	+0.000E-39	+1.154E+00
1	+1.362E-01	+5.692E-01	+4.974E+00	+5.170E+00	+33.00	+3.102E-01	-4.121E+01	+1.811E-01	+9.198E-01	+9.780E-02	+0.000E-39	+1.232E+00
3	+1.675E-01	+6.250E-01	+5.009E+00	+5.235E+00	+30.30	+2.734E-01	-3.678E+01	+1.656E-01	+8.654E-01	+9.460E-02	+0.000E-39	+1.320E+00
3	+5.601E-01	+1.305E+00	+5.401E+00	+6.020E+00	+30.00	+2.500E-01	-1.657E+00	+1.257E-01	+8.057E-01	+1.050E-01	+0.000E-39	+1.822E+00
3	+9.527E-01	+1.985E+00	+5.794E+00	+6.805E+00	+30.00	+2.349E-01	-1.094E+00	+1.154E-01	+7.618E-01	+1.157E-01	+0.000E-39	+2.248E+00
3	+1.345E+00	+2.665E+00	+6.186E+00	+7.591E+00	+30.00	+2.248E-01	-7.245E-01	+1.061E-01	+7.288E-01	+1.256E-01	+0.000E-39	+2.603E+00
3	+1.738E+00	+3.345F+00	+6.579E+00	+8.375E+00	+30.00	+2.183E-01	-4.655E-01	+9.931E-02	+7.036E-01	+1.379E-01	+0.000E-39	+2.889E+00
3	+2.130E+00	+4.025F+00	+6.972E+00	+9.161E+00	+30.00	+2.142E-01	-2.737E-01	+9.413E-02	+6.843E-01	+1.496E-01	+0.000E-39	+3.110E+00
3	+2.523E+00	+4.705E+00	+7.364E+00	+9.945E+00	+30.00	+2.119E-01	-1.329E-01	+9.002E-02	+6.694E-01	+1.616E-01	+0.000E-39	+3.267E+00
3	+2.916E+00	+5.385E+00	+7.757E+00	+1.073E+01	+30.00	+2.111E-01	-2.438E-32	+8.550E-02	+6.579E-01	+1.741E-01	+0.000E-39	+3.359E+00
3	+3.308E+00	+6.065E+00	+8.149E+00	+1.152E+01	+30.00	+2.113E-31	+5.772E-32	+8.370E-02	+6.490F-01	+1.869E-01	+0.000E-39	+3.385E+00
3	+3.701E+00	+6.745E+00	+8.542E+00	+1.230E+01	+30.00	+2.123E-01	+1.184E-31	+8.136E-02	+6.421F-01	+2.000E-01	+0.000E-39	+3.342E+00
4	+4.093E+00	+7.425E+00	+8.934E+00	+1.309E+01	+30.00	+2.103E-01	-1.293E-31	+8.057E-02	+6.311E-01	+2.119E-01	+0.000E-39	+3.228E+00
4	+4.102E+00	+7.439E+00	+8.942E+00	+1.310E+01	+24.30	+1.604E-01	-1.977E-32	+1.373E-01	+5.434E-01	+1.866F-01	+0.000E-39	+3.172E+00
4	+4.112E+00	+7.454F+00	+8.947E+00	+1.312E+01	+18.00	+1.213E-01	-1.573E-32	+8.798E-02	+4.615E-01	+1.517F-01	+0.000E-39	+3.138E+00
4	+4.123E+00	+7.469E+00	+8.951E+00	+1.313E+01	+12.30	+8.957E-02	-1.230E-32	+7.352E-02	+3.833E-01	+1.373E-01	+0.000E-39	+3.125F+00
4	+4.135E+00	+7.484E+00	+8.954E+00	+1.315E+01	+6.00	+6.567E-02	-9.539E-01	+5.628E-02	+3.147E-01	+1.146E-01	+0.000E-39	+3.135E+00
4	+4.148E+00	+7.500E+00	+8.955E+00	+1.317E+01	+0.00	+4.661E-02	-7.133E-31	+4.353E-02	+2.516E-01	+9.337E-02	+0.000E-39	+3.166E+00
4	+4.162E+00	+7.516E+00	+8.954E+00	+1.318E+01	-6.00	+3.284E-32	-5.339E-31	+3.379E-02	+1.991F-01	+7.520E-02	+0.000E-39	+3.219E+00
4	+4.177E+00	+7.531E+00	+8.951E+00	+1.320E+01	-12.30	+2.245E-02	-3.888E-31	+2.554E-02	+1.537E-01	+5.909E-02	+0.000E-39	+0.000E-39
4	+4.192E+00	+7.546E+00	+8.947F+00	+1.321E+01	-18.00	+1.514E-02	-2.776E-31	+1.919E-02	+1.169E-01	+4.569E-02	+0.000E-39	+0.000E-39
4	+4.208E+00	+7.561E+00	+8.942E+00	+1.323E+01	-24.00	+9.941E-03	-1.934E-31	+1.417E-02	+8.691E-02	+3.457E-02	+0.000E-39	+0.000E-39
8	+4.223F+00	+7.575E+00	+8.934E+00	+1.324E+01	-30.00	+6.403E-03	-1.321E-31	+1.039E-02	+6.351E-02	+2.567E-02	+0.000E-39	+0.000E-39
8	+4.244E+00	+7.592F+00	+8.923E+00	+1.326E+01	-38.00	+3.598E-03	+0.000E-39	+2.227E-03	+4.188E-02	+1.727E-02	+0.000E-39	+0.000E-39
8	+4.265E+00	+7.608E+00	+8.909E+00	+1.329E+01	-46.00	+3.598E-03	+0.000E-39	+2.223E-03	+4.187E-02	+1.729E-02	+0.000E-39	+0.000E-39
8	+4.284E+00	+7.621F+00	+8.893E+00	+1.331E+01	-54.30	+3.598E-03	+0.000E-39	+2.219E-03	+4.186E-02	+1.732E-02	+0.000E-39	+0.000E-39
8	+4.303F+00	+7.632E+00	+8.875E+00	+1.333E+01	-62.00	+3.598E-03	+0.000E-39	+2.215E-03	+4.184E-02	+1.735E-02	+0.000E-39	+0.000E-39
8	+4.320E+00	+7.641F+00	+8.856E+00	+1.335E+01	-70.30	+3.598E-03	+0.000E-39	+2.210E-03	+4.183E-02	+1.738E-02	+0.000E-39	+0.000E-39
8	+4.335F+00	+7.647F+00	+8.836F+00	+1.337E+01	-78.00	+3.598E-03	+0.000E-39	+2.205E-03	+4.182E-02	+1.741E-02	+0.000E-39	+0.000E-39
8	+4.348E+00	+7.650E+00	+8.815E+00	+1.339E+01	-86.00	+3.598E-03	+0.000E-39	+2.200E-03	+4.180E-02	+1.743E-02	+0.000E-39	+0.000E-39
8	+4.358E+00	+7.650F+00	+8.794E+00	+1.341E+01	-94.00	+3.598E-03	+0.000E-39	+2.194E-03	+4.179E-02	+1.746E-02	+0.000E-39	+0.000E-39

I ST	X ST	Y ST	S ST	DTDS ST	THET ST	SECT	ALPHA
23	+4.10845E+00	+7.44642E+00	+8.53254E+00	-6.66667E+00	+5.00000E+01	4	+40.00

IW SN	XOW SN	YOW SN	XBW SN	YBW SN	SBW SN	THETW SN	SECT	ALPHA
9	+4.19217E+00	+7.49672E+00	+3.59315E-02	+9.85329E-02	+1.07502E-01	+4.89372E+01	4	+40.00

IL SN	XOL SN	YOL SN	XBL SN	YBL SN	SBL SN	THETL SN	SECT	ALPHA
24	+0.00000E-39	+0.00000E-39	+1.55428E+00	+8.36277E+00	+8.55533E+00	+4.89372E+01	1	+40.00

AT ALPHA = +4.0000E+01 WINDWARD, RW = +1.8284E-01 DELS = +8.9405E-03 SHOCK = -8.7277E-01
SIN(THETAW) NEG. FOR XB = +2.7315E-02 RW = +1.8284E-01 DELS = +8.9406E-03 SHOCK = -8.7277E-01

SEC	XO W	XB W	YB W	SB W	THETBW	PE/PS W	DP/DS W	QL W	QT W	RE W	QR W	XSI W
4	+4.108E+00	+0.000E-39	+0.000E-39	+0.000E-39	+90.00	+1.000E+00	+4.038E-35	+1.613E+00	+3.000E-39	+0.000E-39	+9.837E-02	+8.941E-03
4	+4.112E+00	+9.135E-05	+5.235E-03	+5.236E-03	+88.30	+9.988E-01	-3.253E+01	+1.507E+00	+5.716E-01	+9.293E-05	+8.807E-02	+8.953E-03
4	+4.123E+00	+1.460E-03	+2.088E-02	+2.094E-02	+82.00	+9.805E-01	-1.289E+02	+1.573E+00	+1.522E+00	+1.467E-04	+5.371E-02	+9.144E-03
4	+4.135E+00	+4.456E-03	+3.629E-02	+3.665E-02	+76.00	+9.415E-01	-2.196E+02	+1.623E+00	+1.805E+00	+3.687E-04	+0.000E-39	+9.565E-03
4	+4.148E+00	+9.046E-03	+5.130E-02	+5.236E-02	+70.00	+8.830E-01	-3.037E+02	+1.810E+00	+2.135E+00	+7.233E-04	+0.000E-39	+1.022E-02
4	+4.162E+00	+1.518E-02	+6.576E-02	+6.807E-02	+64.00	+8.078E-01	-3.636E+02	+1.251E+00	+2.345E+00	+1.146E-03	+0.000E-39	+1.113E-02
4	+4.177E+00	+2.279E-02	+7.949E-02	+8.378E-02	+58.00	+7.192E-01	-4.234E+02	+1.154E+00	+2.444E+00	+1.603E-03	+0.000E-39	+1.229E-02
4	+4.192E+00	+3.180E-02	+9.235E-02	+9.943E-02	+52.00	+6.210E-01	-4.539E+02	+1.054E+00	+2.439E+00	+2.045E-03	+0.000E-39	+1.373E-02
4	+4.192E+00	+3.690E-02	+9.853E-02	+1.075E-01	+48.94	+5.685E-01	-4.633E+02	+9.939E-01	+2.309E+00	+2.249E-03	+0.000E-39	+1.457E-02
4	+4.208E+00	+4.210E-02	+1.042E-01	+1.152E-01	+46.00	+5.192E-01	-4.675E+02	+9.315E-01	+2.339E+00	+2.422E-03	+0.000E-39	+1.545E-02
8	+4.223E+00	+5.358E-02	+1.149E-01	+1.309E-01	+40.00	+4.153E-01	-4.636E+02	+7.922E-01	+2.151E+00	+2.585E-03	+3.000E-39	+1.748E-02
8	+4.244E+00	+7.051E-02	+1.272E-01	+1.518E-01	+32.00	+2.834E-01	-4.234E+02	+5.971E-01	+1.797E+00	+2.781E-03	+0.000E-39	+2.068E-02
8	+4.265E+00	+8.899E-02	+1.370E-01	+1.723E-01	+24.00	+2.014E-01	-2.372E+02	+4.477E-01	+1.455E+00	+2.744E-03	+0.000E-39	+2.450E-02
8	+4.284E+00	+1.087E-01	+1.442E-01	+1.937E-01	+16.00	+1.400E-01	-1.757E+02	+3.330E-01	+1.157E+00	+2.575E-03	+0.000E-39	+2.897E-02
8	+4.303E+00	+1.291E-01	+1.485E-01	+2.147E-01	+8.30	+9.488E-02	-1.289E+02	+2.339E-01	+9.344E-01	+2.313E-03	+0.000E-39	+3.411E-02
8	+4.320E+00	+1.500E-01	+1.500E-01	+2.356E-01	+0.00	+5.244E-02	-9.152E+01	+1.523E-01	+6.811E-01	+1.999E-03	+0.000E-39	+3.993E-02
8	+4.335E+00	+1.709E-01	+1.485E-01	+2.566E-01	-8.00	+3.950E-02	-6.256E+01	+1.072E-01	+4.955E-01	+1.643E-03	+0.000E-39	+4.642E-02
8	+4.348E+00	+1.913E-01	+1.442E-01	+2.775E-01	-16.00	+2.421E-02	-4.142E+01	+6.788E-02	+3.592E-01	+1.324E-03	+0.000E-39	+5.353E-02
8	+4.358E+00	+2.110E-01	+1.370E-01	+2.985E-01	-24.00	+1.427E-02	-2.639E+01	+4.394E-02	+2.393E-01	+9.826E-04	+0.000E-39	+0.000E-39
8	+4.366E+00	+2.295E-01	+1.272E-01	+3.194E-01	-32.00	+8.075E-03	-1.615E+01	+2.854E-02	+1.579E-01	+7.252E-04	+0.000E-39	+0.000E-39
9	+4.371E+00	+2.464E-01	+1.149E-01	+3.403E-01	-40.00	+4.378E-03	-9.476E+00	+1.922E-02	+1.004E-01	+5.077E-04	+0.000E-39	+0.000E-39
9	+4.435E+00	+5.285E-01	+1.218E-01	+7.085E-01	-40.00	+4.378E-03	+0.000E-39	+9.754E-03	+8.674E-02	+1.057E-03	+0.000E-39	+0.000E-39

CANNOT FIND THETA FOR RW OR B, SKIP CASE

AT ALPHA = +4.0000E+01, LEEWARD, RW = +0.0000E-39 DELS = +8.9405E-03 BETA = +0.0000E-39

SEC	XO L	XB L	YB L	SB L	THETAL	PE/PS L	DP/DS L	QL L	QT L	RE L	QR L	XSI L
4	+4.108E+00	+0.000E-39	+0.000E-39	+0.000E-39	+90.00	+1.000E+00	+4.008E-05	+1.610E+00	+0.000E-39	+0.000E-39	+0.000E-39	+0.000E-39
4	+4.102E+00	+3.654E-04	+1.046E-02	+1.047E-02	+86.00	+9.951E-01	-5.513E+01	+1.501E+00	+9.441E-02	+1.955E-06	+0.000E-39	+0.000E-39
4	+4.093E+00	+2.279E-03	+2.605E-02	+2.618E-02	+80.00	+9.698E-01	-1.600E+02	+1.553E+00	+1.639E-01	+1.199E-05	+0.000E-39	+0.000E-39
3	+3.701E+00	+1.386E-01	+7.993E-01	+8.114E-01	+80.00	+9.698E-01	+0.000E-39	+7.569E-01	+7.581E-01	+5.943E-03	+0.000E-39	+0.000E-39
3	+3.308E+00	+2.750E-01	+1.573E+00	+1.597E+00	+80.00	+9.698E-01	+0.000E-39	+5.227E-01	+5.622E-01	+1.171E-02	+0.000E-39	+0.000E-39
3	+2.916E+00	+4.113E-01	+2.346E+00	+2.382E+00	+80.00	+9.698E-01	+0.000E-39	+5.234E-01	+5.112E-01	+1.746E-02	+0.000E-39	+0.000E-39
3	+2.523E+00	+5.477E-01	+3.119E+00	+3.167E+00	+80.00	+9.698E-01	+0.000E-39	+4.637E-01	+5.774E-01	+2.322E-02	+0.000E-39	+0.000E-39
3	+2.130E+00	+6.840E-01	+3.892E+00	+3.952E+00	+80.00	+9.698E-01	+0.000E-39	+4.146E-01	+5.524E-01	+2.898E-02	+0.000E-39	+0.000E-39
3	+1.738E+00	+8.204E-01	+4.666E+00	+4.737E+00	+80.00	+9.698E-01	+0.000E-39	+3.738E-01	+5.327E-01	+3.474E-02	+0.000E-39	+0.000E-39
3	+1.345E+00	+9.567E-01	+5.439E+00	+5.523E+00	+80.00	+9.698E-01	+0.000E-39	+3.524E-01	+5.156E-01	+4.049E-02	+0.000E-39	+0.000E-39
3	+9.527E-01	+1.093E+00	+6.212E+00	+6.308E+00	+80.00	+9.698E-01	+0.000E-39	+3.301E-01	+5.031E-01	+4.625E-02	+0.000E-39	+0.000E-39
3	+5.601E-01	+1.229E+00	+6.985E+00	+7.093E+00	+80.00	+9.699E-01	+0.000E-39	+3.116E-01	+4.914E-01	+5.201E-02	+0.000E-39	+0.000E-39
3	+1.675E-01	+1.366E+00	+7.759E+00	+7.878E+00	+80.00	+9.698E-01	+0.000E-39	+2.953E-01	+4.812E-01	+5.777E-02	+0.000E-39	+0.000E-39
1	+1.362E-01	+1.379E+00	+7.823E+00	+7.944E+00	+77.00	+9.494E-01	-2.451E+01	+5.105E-01	+5.836E-01	+7.463E-02	+0.000E-39	+0.000E-39
1	+1.081E-01	+1.395E+00	+7.886E+00	+8.009E+00	+74.00	+9.243E-01	-2.974E+01	+5.733E-01	+6.747E-01	+9.091E-02	+0.000E-39	+0.000E-39
1	+8.302E-02	+1.415E+00	+7.949E+00	+8.074E+00	+71.00	+8.940E-01	-3.456E+01	+6.382E-01	+7.549E-01	+1.064E-01	+0.000E-39	+0.000E-39
1	+6.118E-02	+1.438E+00	+8.010E+00	+8.143E+00	+68.30	+8.599E-01	-3.899E+01	+7.053E-01	+8.240E-01	+1.209E-01	+0.000E-39	+0.000E-39
1	+4.259E-02	+1.464E+00	+8.070E+00	+8.205E+00	+65.00	+8.214E-01	-4.300E+01	+7.731E-01	+8.820E-01	+1.343E-01	+0.000E-39	+0.000E-39
1	+2.732E-02	+1.493E+00	+8.129E+00	+8.271E+00	+62.00	+7.796E-01	-4.653E+01	+8.417E-01	+9.288E-01	+1.453E-01	+0.000E-39	+0.000E-39
1	+1.539E-02	+1.525E+00	+8.185E+00	+8.336E+00	+59.00	+7.347E-01	-4.956E+01	+9.127E-01	+9.642E-01	+1.568E-01	+0.000E-39	+0.000E-39
1	+6.848E-03	+1.560E+00	+8.241E+00	+8.402E+00	+56.00	+6.873E-01	-5.204E+01	+9.855E-01	+9.882E-01	+1.656E-01	+0.000E-39	+0.000E-39
1	+1.713E-03	+1.598E+00	+8.294E+00	+8.467E+00	+53.00	+6.378E-01	-5.396E+01	+1.059E+00	+1.001E+00	+1.726E-01	+0.000E-39	+0.000E-39
1	+0.000E-39	+1.639E+00	+8.345E+00	+8.533E+00	+50.00	+5.868E-01	-5.528E+01	+1.129E+00	+1.002E+00	+1.777E-01	+0.000E-39	+0.000E-39
1	+0.000E-39	+1.654E+00	+8.363E+00	+8.555E+00	+48.94	+5.685E-01	-5.550E+01	+1.374E-01	+9.995E-01	+1.790E-01	+0.000E-39	+0.000E-39
1	+1.713E-03	+1.683E+00	+8.394E+00	+8.598E+00	+47.00	+5.365E-01	-5.599E+01	+1.230E-01	+9.922E-01	+1.807E-01	+0.000E-39	+0.000E-39
1	+6.848E-03	+1.728E+00	+8.441E+00	+8.564E+00	+44.00	+4.844E-01	-5.680E+01	+1.352E-01	+9.717E-01	+1.815E-01	+0.000E-39	+0.000E-39
1	+1.539E-02	+1.777E+00	+8.485E+00	+8.729E+00	+41.00	+4.325E-01	-5.558E+01	+1.472E-01	+9.408E-01	+1.804E-01	+0.000E-39	+0.000E-39
1	+2.732E-02	+1.827E+00	+8.527E+00	+8.794E+00	+38.00	+3.813E-01	-5.445E+01	+1.324E-01	+8.999E-01	+1.769E-01	+0.000E-39	+0.000E-39
1	+4.259E-02	+1.880E+00	+8.566E+00	+8.860E+00	+35.00	+3.372E-01	-4.445E+01	+1.519E-01	+8.561E-01	+1.722E-01	+0.000E-39	+0.000E-39
1	+6.118E-02	+1.934E+00	+8.602E+00	+8.925E+00	+32.00	+2.981E-01	-3.972E+01	+1.052E-01	+8.099E-01	+1.655E-01	+0.000E-39	+0.000E-39
1	+8.302E-02	+1.991E+00	+8.635E+00	+8.991E+00	+29.00	+2.627E-01	-3.554E+01	+1.522E-01	+7.620E-01	+1.500E-01	+0.000E-39	+0.000E-39
1	+1.081E-01	+2.049E+00	+8.665E+00	+9.056E+00	+26.00	+2.309E-01	-3.186E+01	+1.202E-01	+7.132E-01	+1.528E-01	+0.000E-39	+0.000E-39
1	+1.362E-01	+2.108E+00	+8.692E+00	+9.122E+00	+23.00	+2.028E-01	-2.853E+01	+1.312E-01	+6.654E-01	+1.453E-01	+0.000E-39	+0.000E-39
3	+1.675E-01	+2.169E+00	+8.716E+00	+9.187E+00	+20.00	+1.777E-01	-2.570E+01	+1.443E-01	+6.180E-01	+1.375E-01	+0.000E-39	+0.000E-39
3	+5.601E-01	+2.907E+00	+8.985E+00	+9.972E+00	+20.00	+1.668E-01	-8.830E-31	+2.733E-01	+5.868E-01	+1.449E-01	+0.000E-39	+0.000E-39
3	+9.527E-01	+3.645E+00	+9.253E+00	+1.076E+01	+20.00	+1.577E-01	-7.422E-31	+2.447E-01	+5.600E-01	+1.519E-01	+0.000E-39	+0.000E-39
3	+1.345E+00	+4.383E+00	+9.522E+00	+1.154E+01	+20.00	+1.509E-01	-5.723E-31	+2.253E-01	+5.382E-01	+1.594E-01	+0.000E-39	+0.000E-39
3	+1.738E+00	+5.121E+00	+9.790E+00	+1.233E+01	+20.00	+1.510E-01	+0.000E-39	+2.093E-01	+5.314E-01	+1.703E-01	+0.000E-39	+0.000E-39
3	+2.130E+00	+5.858E+00	+1.006E+01	+1.311E+01	+20.00	+1.453E-01	-4.996E-31	+2.029E-01	+5.127E-01	+1.774E-01	+0.000E-39	+0.000E-39
3	+2.523E+00	+6.596E+00	+1.033E+01	+1.390E+01	+20.00	+1.397E-31	-4.419E-31	+1.912E-01	+4.950E-01	+1.845E-01	+0.000E-39	+0.000E-39
3	+2.916E+00	+7.334E+00	+1.060E+01	+1.468E+01	+20.00	+1.351E-01	-3.980E-31	+1.813E-01	+4.809E-01	+1.915E-01	+0.000E-39	+0.000E-39
3	+3.308E+00	+8.072E+00	+1.086E+01	+1.547E+01	+20.00	+1.306E-01	-3.783E-31	+1.727E-01	+4.666E-01	+1.982E-01	+0.000E-39	+0.000E-39
3	+3.701E+00	+8.810E+00	+1.113E+01	+1.625E+01	+20.00	+1.266E-31	-3.336E-31	+1.649E-01	+4.535E-01	+2.049E-01	+0.000E-39	+0.000E-39
4	+4.093E+00	+9.548E+00	+1.140F+01	+1.704E+01	+20.00	+1.231E-01	-2.954E-31	+1.532E-01	+4.417E-01	+2.115E-01	+0.000E-39	+0.000E-39
4	+4.102E+00	+9.563E+00	+1.141E+01	+1.705E+01	+14.30	+9.099E-32	-1.245E+02	+2.105E-01	+3.672E-01	+1.794E-01	+0.000E-39	+0.000E-39
4	+4.108E+00	+9.573E+00	+1.141E+01	+1.707E+01	+10.00	+7.420E-32	-1.055E+02	+1.354E-01	+3.230E-01	+1.598E-01	+0.000E-39	+0.000E-39
4	+4.112E+00	+9.578E+00	+1.141E+01	+1.707E+01	+8.00	+6.666E-32	-9.657E+01	+1.750E-01	+3.016E-01	+1.551E-01	+0.000E-39	+0.000E-39
4	+4.123E+00	+9.594E+00	+1.141E+01	+1.709E+01	+2.00	+4.729E-32	-7.259E+01	+1.334E-01	+2.411E-01	+1.222E-01	+0.000E-39	+0.000E-39
4	+4.135E+00	+9.609E+00	+1.141F+01	+1.713E+01	-4.30	+3.332E-32	-5.425E+01	+1.012E-01	+1.909E-01	+9.947E-02	+0.000E-39	+0.000E-39
4	+4.148F+00	+9.625F+00	+1.141E+01	+1.712E+01	-10.00	+2.279E-02	-3.936E+01	+7.553E-02	+1.473E-01	+7.735E-02	+0.000E-39	+0.000E-39
4	+4.162E+00	+9.640E+00	+1.141E+01	+1.713E+01	-16.00	+1.587E-02	-2.812E+01	+5.752E-02	+1.121F-01	+5.995E-02	+0.000E-39	+0.000E-39
4	+4.177F+00	+9.655F+00	+1.140E+01	+1.715F+01	-22.00	+1.011E-32	-1.952E+01	+4.263E-02	+8.349E-02	+4.581E-02	+0.000E-39	+0.000E-39
4	+4.192E+00	+9.669F+00	+1.139E+01	+1.716E+01	-28.00	+6.514E-03	-1.343E+01	+3.133E-02	+6.195E-02	+3.367E-02	+0.000E-39	+0.000E-39
4	+4.208E+00	+9.683E+00	+1.139F+01	+1.718E+01	-34.00	+4.092E-03	-8.933E+00	+2.269E-02	+4.496E-02	+2.445E-02	+0.000E-39	+0.000E-39
8	+4.223E+00	+9.695F+00	+1.138E+01	+1.720E+01	-40.00	+3.598E-03	+0.000E-39	+1.931E-02	+3.976E-02	+2.238E-02	+0.000E-39	+0.000E-39
8	+4.244E+00	+9.710E+00	+1.136E+01	+1.722E+01	-48.00	+3.598E-03	+0.000E-39	+1.953E-02	+3.976E-02	+2.241E-02	+0.000E-39	+0.000E-39

Figure 72c

8	+4.265E+00	+9.723E+00	+1.134E+01	+1.724E+01	-56.00	+3.598E-03	+0.000E-39	+5.443E-03	+3.974E-02	+2.244E-02	+0.000E-39	+0.000E-39
8	+4.284E+00	+9.734E+00	+1.133E+01	+1.725E+01	-64.00	+3.598E-03	+0.000E-39	+5.433E-03	+3.973E-02	+2.247E-02	+0.000E-39	+0.000E-39
8	+4.303E+00	+9.742E+00	+1.131E+01	+1.729E+01	-72.00	+3.598E-03	+0.000E-39	+5.421E-03	+3.972E-02	+2.249E-02	+0.000E-39	+0.000E-39
8	+4.320E+00	+9.747E+00	+1.129E+01	+1.733E+01	-80.00	+3.598E-03	+0.000E-39	+5.410E-03	+3.971E-02	+2.252E-02	+0.000E-39	+0.000E-39
8	+4.335E+00	+9.749E+00	+1.127E+01	+1.732E+01	-88.00	+3.598E-03	+0.000E-39	+5.399E-03	+3.970E-02	+2.255E-02	+0.000E-39	+0.000E-39
8	+4.348E+00	+9.748E+00	+1.125E+01	+1.734E+01	-96.00	+3.598E-03	+0.000E-39	+5.388E-03	+3.970E-02	+2.257E-02	+0.000E-39	+0.000E-39

I ST	X ST	Y ST	S ST	DTDS ST	THET ST	SECT	ALPHA
26	+4.14835E+00	+7.47990E+00	+8.58500E+00	-6.66667E+00	+3.00000E+01	4	+60.00

IW SN	XOW SN	YOW SN	XBW SN	YBW SN	SBW SN	THETW SN	SECT	ALPHA
8	+4.24423E+00	+7.49854E+00	+3.69015E-02	+9.85328E-02	+1.07502E-01	+4.89372E+01	9	+60.00

IL SN	XOL SN	YOL SN	XBL SN	YBL SN	SBL SN	THETL SN	SECT	ALPHA
20	+8.30245E-02	+4.47960E-01	+4.38612E+00	+7.07111E+00	+8.17186E+00	+4.89372E+01	1	+60.00

AT ALPHA = +6.0000E+01 WINDWARD, RW = +2.7533E-01 DELS = +1.8342E-02 BETA = -1.3402E+00
SIN(THETAW) NEG. FOR XB = +2.7315E-02 RW = +2.7633E-01 DELS = +1.8342E-02 BETA = -1.3402E+00

SEC	XO W	XB W	YB W	SB W	THETBW	PE/PS W	DP/DS W	QL W	QT W	RF W	QR W	XSI W
4	+4.148E+00	+0.000E-39	+0.000E-39	+0.000E-39	+90.30	+1.000E+00	-4.879E-04	+1.573E+00	+0.000E-39	+0.000E-39	+2.018E-01	+1.834E-02
4	+4.162E+00	+8.217E-04	+1.568E-02	+1.571E-02	+84.00	+9.891E-01	-9.725E+01	+1.560E+00	+1.122E+00	+8.305E-05	+1.398E-01	+1.870E-02
4	+4.177E+00	+3.278E-03	+3.119E-02	+3.142E-02	+78.00	+9.568E-01	-1.903E+02	+1.506E+00	+1.659E+00	+3.243E-04	+2.688E-02	+1.978E-02
4	+4.192E+00	+7.342E-03	+4.635E-02	+4.712E-02	+72.00	+9.045E-01	-2.749E+02	+1.333E+00	+1.775E+00	+5.931E-04	+0.000E-39	+2.159E-02
4	+4.208E+00	+1.297E-02	+6.101E-02	+6.283E-02	+66.00	+8.346E-01	-3.476E+02	+1.143E+00	+1.992E+00	+9.981E-04	+0.000E-39	+2.411E-02
8	+4.223E+00	+2.010E-02	+7.500E-02	+7.854E-02	+60.30	+7.500E-01	-4.051E+02	+1.259E+00	+2.109E+00	+1.450E-03	+0.000E-39	+2.735E-02
8	+4.244E+00	+3.180E-02	+9.235E-02	+9.948E-02	+52.00	+6.210E-01	-4.539E+02	+1.105E+00	+2.123E+00	+2.046E-03	+0.000E-39	+3.274E-02
8	+4.264E+00	+3.690E-02	+9.853E-02	+1.075E-01	+48.94	+5.685E-01	-4.683E+02	+1.045E+00	+2.088E+00	+2.249E-03	+0.000E-39	+3.512E-02
8	+4.285E+00	+4.580E-02	+1.079E-01	+1.204E-01	+44.00	+4.844E-01	-4.675E+02	+9.281E-01	+1.989E+00	+2.624E-03	+0.000E-39	+3.930E-02
8	+4.284E+00	+6.183E-02	+1.214E-01	+1.414E-01	+36.00	+3.478E-01	-4.449E+02	+7.233E-01	+1.727E+00	+2.774E-03	+0.000E-39	+4.688E-02
8	+4.303E+00	+7.958E-02	+1.324E-01	+1.623E-01	+28.00	+2.493E-01	-2.832E+02	+5.463E-01	+1.443E+00	+2.829E-03	+0.000E-39	+5.524E-02
8	+4.320E+00	+9.870E-02	+1.410E-01	+1.833E-01	+20.00	+1.758E-01	-2.124E+02	+4.083E-01	+1.170E+00	+2.730E-03	+0.000E-39	+6.403E-02
8	+4.335E+00	+1.188E-01	+1.467E-01	+2.042E-01	+12.30	+1.213E-01	-1.573E+02	+2.989E-01	+9.236E-01	+2.517E-03	+0.000E-39	+7.277E-02
8	+4.348E+00	+1.395E-01	+1.496E-01	+2.251E-01	+4.00	+8.138E-02	-1.137E+02	+2.133E-01	+7.085E-01	+2.223E-03	+0.000E-39	+8.094E-02
8	+4.358E+00	+1.605E-01	+1.496E-01	+2.461E-01	-4.00	+5.274E-02	-7.959E+01	+1.475E-01	+5.256E-01	+1.881E-03	+0.000E-39	+8.800E-02
8	+4.366E+00	+1.812E-01	+1.467E-01	+2.670E-01	-12.00	+3.322E-02	-5.411E+01	+9.951E-02	+3.810E-01	+1.534E-03	+0.000E-39	+9.355E-02
9	+4.371E+00	+2.013E-01	+1.410E-01	+2.880E-01	-20.00	+2.009E-02	-3.535E+01	+5.483E-02	+2.662E-01	+1.199E-03	+0.000E-39	+0.000E-39
9	+4.435E+00	+5.473E-01	+1.502E-02	+6.592E-01	-20.00	+2.009E-02	+0.000E-39	+4.825E-02	+2.258E-01	+2.732E-03	+0.000E-39	+0.000E-39
9	+4.499E+00	+8.933E-01	+1.109E-01	+1.024E+00	-20.00	+2.009E-02	+0.000E-39	+4.482E-02	+2.055E-01	+4.265E-03	+0.000E-39	+0.000E-39

AT ALPHA = +6.0000E+01, LEEWARD, RW = +1.6970E+01 DELS = +1.8342E-02 3S+DJX = -2.7396E+00
SIN(THETAW) NEG. FOR XB = +4.0572E+00 RW = +1.6970E+01 DELS = +1.8342E-02 3S+DJX = -2.7396E+00

SEC	XO L	XB L	YB L	SB L	THETBL	PE/PS L	DP/DS L	DL L	DT L	RE L	QR L	XSI L
4	+4.148E+00	+0.000E-39	+0.000E-39	+0.000E-39	+90.00	+1.000E+00	-5.153E-04	+1.573E+00	+0.000E-39	+0.000E-39	+2.018E-01	+1.834E-02
4	+4.135F+00	+8.217E-04	+1.568E-02	+1.571E-02	+84.00	+9.891E-01	-9.725E+01	+1.553E+00	+2.384E-01	+1.198E-05	+1.712E-01	+1.926E-02
4	+4.123E+00	+3.276E-03	+3.119E-02	+3.142E-02	+78.00	+9.569E-01	-1.903E+02	+1.506E+00	+3.524E-01	+4.677E-05	+6.028E-02	+2.206E-02
4	+4.112E+00	+7.342E-03	+4.635E-02	+4.712E-02	+72.00	+9.045E-01	-2.749E+02	+1.534E+00	+1.775E+00	+5.931E-04	+3.571E-02	+2.691E-02
4	+4.102E+00	+1.297E-02	+6.101E-02	+6.283E-02	+66.00	+8.345E-01	-3.476E+02	+1.492E+00	+9.981E-04	+4.353E-02	+3.409E-02	
4	+4.093E+00	+2.010E-02	+7.500E-02	+7.854E-02	+60.00	+7.500E-01	-4.051E+02	+1.437E+00	+2.109E+00	+1.450E-03	+5.385E-02	+4.405E-02
3	+3.701E+00	+4.127E-01	+7.550E-01	+8.637E-01	+60.00	+7.500E-01	+0.000E-39	+7.245E-01	+1.306E+00	+1.595E-02	+0.000E-39	+4.645E-01
3	+3.308E+00	+8.053E-01	+1.435E+00	+1.549E+00	+60.00	+7.500E-01	+0.000E-39	+5.180E-01	+1.147E+00	+3.044E-02	+0.000E-39	+8.334E-01
3	+2.916E+00	+1.198E+00	+2.115E+00	+2.434E+00	+60.00	+7.500E-01	+0.000E-39	+4.243E-01	+1.061E+00	+4.494E-02	+0.000E-39	+1.153E+00
3	+2.523E+00	+1.590E+00	+2.795E+00	+3.219E+00	+60.00	+7.500E-01	+0.000E-39	+3.533E-01	+1.004E+00	+5.943E-02	+0.000E-39	+1.426E+00
3	+2.130E+00	+1.983E+00	+3.475E+00	+4.005E+00	+60.00	+7.500E-01	+0.000E-39	+3.298E-01	+9.608E-01	+7.393E-02	+0.000E-39	+1.651E+00
3	+1.738E+00	+2.376E+00	+4.155E+00	+4.790E+00	+60.00	+7.500E-01	+0.000E-39	+3.013E-01	+9.270E-01	+8.843E-02	+0.000E-39	+1.829E+00
3	+1.345E+00	+2.768E+00	+4.835E+00	+5.575E+00	+60.00	+7.500E-01	+0.000E-39	+2.791E-01	+8.993E-01	+1.029E-01	+0.000E-39	+1.957E+00
3	+0.527E-01	+3.161E+00	+5.515E+00	+6.360E+00	+60.00	+7.500E-01	+0.000E-39	+2.611E-01	+8.759E-01	+1.174E-01	+0.000E-39	+2.032E+00
3	+5.601E-01	+3.553E+00	+6.195E+00	+7.145E+00	+60.00	+7.500E-01	+0.000E-39	+2.463E-01	+8.558E-01	+1.319E-01	+0.000E-39	+2.050E+00
3	+1.675E-01	+3.946E+00	+6.875E+00	+7.931E+00	+60.00	+7.500E-01	+0.000E-39	+2.337E-01	+8.381E-01	+1.464E-01	+0.000E-39	+2.004E+00
1	+1.362E-01	+3.980E+00	+6.931E+00	+7.996E+03	+57.00	+7.034E-01	-5.128E+01	+3.454E-01	+8.625E-01	+1.554E-01	+0.000E-39	+1.989E+00
1	+1.081E-01	+4.017F+00	+6.985E+00	+8.061E+00	+54.00	+6.545E-01	-5.338E+01	+3.454E-01	+8.767E-01	+1.629E-01	+0.000E-39	+1.979E+00
1	+8.302E-02	+4.057E+00	+7.037E+00	+8.127E+00	+51.00	+6.043E-01	-5.490E+01	+3.414E-01	+8.810E-01	+1.683E-01	+0.000E-39	+1.975E+00
1	+8.302E-02	+4.086E+00	+7.071E+00	+8.172E+00	+48.94	+5.685E-01	-5.550E+01	+3.375E-01	+8.782E-01	+1.710E-01	+0.000E-39	+1.975E+00
1	+6.118E-02	+4.100E+00	+7.086E+00	+8.192E+00	+48.00	+5.539E-01	-5.532E+01	+3.355E-01	+8.756E-01	+1.718E-01	+0.000E-39	+1.976E+00
1	+4.259E-02	+4.145E+00	+7.134E+00	+8.258E+00	+45.00	+5.018E-01	-5.613E+01	+3.229E-01	+8.607E-01	+1.735E-01	+0.000E-39	+1.981E+00
1	+2.732E-02	+4.192E+00	+7.179E+00	+8.323E+00	+42.00	+4.497E-01	-5.532E+01	+3.085E-01	+8.355E-01	+1.730E-01	+0.000E-39	+1.992E+00
1	+1.539E-02	+4.242E+00	+7.221E+00	+8.389E+00	+39.00	+3.982E-01	-5.490E+01	+2.913E-01	+8.034E-01	+1.705E-01	+0.000E-39	+2.007E+00
1	+6.848E-03	+4.294E+00	+7.261E+00	+8.454E+00	+36.00	+3.515E-01	-4.658E+01	+2.577E-01	+7.652E-01	+1.664E-01	+0.000E-39	+2.027E+00
1	+1.713E-03	+4.348E+00	+7.298E+00	+8.520E+00	+33.00	+3.102E-01	-4.121E+01	+2.455E-01	+7.246E-01	+1.612E-01	+0.000E-39	+2.052E+00
1	+0.000E-39	+4.404E+00	+7.333E+00	+8.585E+00	+30.00	+2.734E-01	-3.678E+01	+2.255E-01	+6.824E-01	+1.551E-01	+0.000E-39	+2.081E+00
1	+1.713E-03	+4.461E+00	+7.364E+00	+8.650E+00	+27.00	+2.410E-01	-3.303E+01	+2.079E-01	+6.405E-01	+1.486E-01	+0.000E-39	+2.114E+00
1	+6.848E-03	+4.520E+00	+7.392E+00	+8.715E+00	+24.00	+2.120E-01	-2.959E+01	+1.930E-01	+5.984E-01	+1.416E-01	+0.000E-39	+2.152E+00
1	+1.539E-02	+4.581E+00	+7.417E+00	+8.781E+00	+21.00	+1.856E-01	-2.663E+01	+1.727E-01	+5.561E-01	+1.342E-01	+0.000E-39	+2.194E+00
1	+2.732E-02	+4.642E+00	+7.439E+00	+8.847E+00	+18.00	+1.617E-01	-2.331E+01	+1.562E-01	+5.141E-01	+1.265E-01	+0.000E-39	+2.239E+00
1	+4.259E-02	+4.705E+00	+7.457E+00	+8.912E+00	+15.00	+1.408E-01	-2.129E+01	+1.412E-01	+4.739E-01	+1.188E-01	+0.000E-39	+2.288E+00
1	+6.118E-02	+4.769F+00	+7.473F+00	+8.978E+00	+12.00	+1.224E-01	-1.902E+01	+1.272E-01	+4.357E-01	+1.112E-01	+0.000E-39	+2.340E+00
1	+8.302E-02	+4.833E+00	+7.485E+00	+9.043E+00	+9.00	+1.055E-01	-1.688E+01	+1.139E-01	+3.980E-01	+1.034E-01	+0.000E-39	+2.395E+00
1	+1.081E-01	+4.898E+00	+7.493E+00	+9.109E+00	+6.00	+9.054E-02	-1.439E+01	+1.013E-01	+3.614E-01	+9.557E-02	+0.000E-39	+2.454E+00
1	+1.362E-01	+4.963E+00	+7.498E+00	+9.174E+00	+3.00	+7.796E-02	-1.318E+01	+9.044E-02	+3.285E-01	+8.838E-02	+0.000E-39	+2.514E+00
3	+1.675E-01	+5.029E+00	+7.500E+00	+9.240E+00	+0.00	+6.659E-02	-1.158E+01	+8.011E-02	+2.957E-01	+8.119E-02	+0.000E-39	+2.575E+00
3	+5.601E-01	+5.814E+00	+7.500E+00	+1.302E+01	+0.00	+6.657F-02	+0.000E-39	+5.445E-02	+2.918E-01	+8.808F-02	+0.000E-39	+2.735E+00
3	+9.527E-01	+6.599E+00	+7.500E+00	+1.081E+01	+0.00	+6.552E-02	-9.384E-02	+5.553E-02	+2.845E-01	+9.407E-02	+0.000E-39	+2.729E+00
3	+1.345E+00	+7.384E+00	+7.500E+00	+1.160E+01	+0.00	+6.447E-02	-9.032E-02	+5.423E-02	+2.777E-01	+9.995E-02	+0.000E-39	+0.000E-39
3	+1.738E+00	+8.169E+00	+7.500E+00	+1.238E+01	+0.00	+6.348E-02	-8.730E-02	+5.299E-02	+2.713E-01	+1.058E-01	+0.000E-39	+0.000E-39
3	+2.130E+00	+8.955E+00	+7.500E+00	+1.317E+01	+0.00	+6.205E-02	-1.232E+01	+5.197E-02	+2.641F-01	+1.110E-01	+0.000E-39	+0.000E-39
3	+2.523F+00	+9.740E+00	+7.500E+00	+1.395E+01	+0.00	+6.072E-02	-1.158E+01	+5.053E-02	+2.574E-01	+1.161E-01	+0.000E-39	+0.000E-39
3	+2.916E+00	+1.052E+01	+7.500E+00	+1.474E+01	+0.00	+5.944E-02	-1.110E+01	+4.918E-02	+2.511F-01	+1.211E-01	+0.000E-39	+0.000E-39
3	+3.308E+00	+1.131E+01	+7.500E+00	+1.552E+01	+0.00	+5.823E-02	-1.056E+01	+4.793E-02	+2.452E-01	+1.259F-01	+0.000E-39	+0.000E-39
3	+3.701E+00	+1.210E+01	+7.500E+00	+1.631E+01	+0.00	+5.745E-02	-6.841E-02	+4.552E-02	+2.407F-01	+1.313E-01	+0.000E-39	+0.000E-39
4	+4.093E+00	+1.288E+01	+7.500E+00	+1.709E+01	+0.00	+5.735E-02	+0.000E-39	+4.409E-02	+2.382E-01	+1.374F-01	+0.000E-39	+0.000E-39
4	+4.102E+00	+1.290E+01	+7.499E+00	+1.711E+01	-6.00	+4.077F-02	-6.424E-01	+3.831E-02	+1.902E-01	+1.117F-01	+0.000E-39	+0.000E-39
4	+4.112E+00	+1.291F+01	+7.497E+00	+1.712E+01	-12.00	+2.849E-02	-4.754E+01	+5.525E-02	+1.494F-01	+8.927E-02	+0.000E-39	+0.000E-39
4	+4.123E+00	+1.293E+01	+7.493E+00	+1.714E+01	-18.30	+1.943E-02	-3.437E+01	+5.010E-02	+1.149E-01	+6.983E-02	+0.000E-39	+0.000E-39
4	+4.135E+00	+1.294E+01	+7.487E+00	+1.715E+01	-24.00	+1.295E-02	-2.428E+01	+3.799E-02	+8.656E-02	+5.350E-02	+0.000E-39	+0.000E-39
4	+4.148E+00	+1.296F+01	+7.480E+00	+1.717E+01	-30.00	+8.464E-03	-1.632E+01	+2.853E-02	+6.407F-02	+4.025E-02	+0.000E-39	+0.000E-39
4	+4.162E+00	+1.297E+01	+7.471E+00	+1.719E+01	-36.00	+5.384E-03	-1.136E+01	+2.117E-02	+4.635E-02	+2.958E-02	+0.000E-39	+0.000E-39
4	+4.177E+00	+1.298F+01	+7.461E+00	+1.720E+01	-42.00	+3.598E-03	+0.000E-39	+3.531E-03	+3.461E-02	+2.238E-02	+0.000E-39	+0.000E-39
4	+4.192E+00	+1.299E+01	+7.450E+00	+1.722E+01	-48.00	+3.598E-03	+0.000E-39	+3.531E-03	+3.461E-02	+2.241E-02	+0.000E-39	+0.000E-39

```
  4 +4.208E+00 +1.300F+01 +7.438E+00 +1.723E+01 -54.00 +3.598E-03 +0.000E-39 +3.531E-03 +3.459E-02 +2.243E-02 +0.000F-39 +0.000F-39
  8 +4.223E+00 +1.301E+01 +7.425E+00 +1.725E+01 -60.00 +3.598E-03 +0.000E-39 +3.531E-03 +3.459E-02 +2.245E-02 +0.000E-39 +0.000E-39
  8 +4.244F+00 +1.302E+01 +7.406E+00 +1.727E+01 -68.00 +3.598E-03 +0.000E-39 +3.530E-03 +3.459F-02 +2.248F-02 +0.000E-39 +0.000E-39
  8 +4.265E+00 +1.303E+01 +7.386E+00 +1.729E+01 -76.00 +3.598E-03 +0.000E-39 +3.530E-03 +3.458F-02 +2.251F-02 +0.000E-39 +0.000E-39
  8 +4.284E+00 +1.303E+01 +7.366E+00 +1.731E+01 -84.00 +3.598E-03 +0.000E-39 +3.530E-03 +3.457E-02 +2.253F-02 +0.000E-39 +0.000E-39
  8 +4.303E+00 +1.303F+01 +7.345E+00 +1.733E+01 -92.00 +3.598E-03 +0.000E-39 +3.530E-03 +3.456F-02 +2.255E-02 +0.000E-39 +0.000E-39

 I ST      X ST          Y ST          S ST          DTDS ST       THET ST       SECT  ALPHA

 31 +4.22335E+00 +7.50000E+00 +8.66354E+00 -6.66667E+00 +0.00000E-39    8   +90.00

 IW SN     XOW SN        YOW SN        XBW SN        YBW SN        SBW SN        THETW SN      SECT  ALPHA

  7 +4.31977E+00 +7.46491E+00 +3.69015E-02 +9.85329E-02 +1.07502E-01 +4.39372E+01     8   +90.00

 IL SN     XOL SN        YOL SN        XBL SN        YBL SN        SBL SN        THETL SN      SECT  ALPHA

  8 +4.13519E+00 +7.47135E+00 +3.69015E-02 +9.85328E-02 +1.07502E-01 +4.39372E+01     4   +90.00
```

AT ALPHA = +9.0000E+01 WINDWARD, RW = +2.7633E-01 DELS = +1.8342E-02 3343DC = -2.5619E-02
THETAW LESS THAN LIMIT

SEC	XO W	XB W	YB W	SB W	THETBW	PE/PS W	DP/DS W	QL W	QT W	RE W	QR W	XSI W
8	+4.223E+00	-0.000E-39	+0.000E-39	+90.00	+1.000F+00	+4.008E-35	+2.219E+00	+3.000E-39	+0.000E-39	+2.018E-01	+1.834E-02	
8	+4.244E+00	+1.460E-03	+2.088E-02	+2.094E-02	+82.10	+9.805E-01	-1.239E+32	+2.175E+00	+1.325E+00	+1.467E-04	+1.115E-01	+1.899E-02
8	+4.265E+00	+5.811E-03	+4.135E-02	+4.189E-02	+74.00	+9.240E-01	-2.479E+32	+2.050E+00	+1.920F+00	+5.621E-04	+0.000E-39	+2.095E-02
8	+4.284E+00	+1.297E-02	+6.101E-02	+6.283E-02	+66.30	+8.345E-01	-3.476E+32	+1.725E+00	+1.992F+00	+2.981E-04	+0.000E-39	+2.431E-02
8	+4.303E+00	+2.279E-02	+7.949E-02	+8.378E-02	+58.00	+7.192E-01	-4.294E+32	+1.591E+00	+2.128E+00	+1.603E-03	+0.000E-39	+2.924E-02
8	+4.320E+00	+3.509E-02	+9.642E-02	+1.047E-01	+50.00	+5.868E-01	-4.616E+32	+1.369E+00	+2.103E+00	+2.181E-03	+0.000E-39	+3.596E-02
8	+4.320E+00	+3.690E-02	+9.853E-02	+1.075E-01	+48.94	+5.685E-01	-4.683E+32	+1.359E+00	+2.098F+00	+2.249E-03	+0.000E-39	+3.701E-02
8	+4.335E+00	+4.963E-02	+1.115E-01	+1.257E-01	+42.00	+4.497E-01	-4.652E+32	+1.149E+00	+1.935E+00	+2.513E-03	+0.000E-39	+4.481E-02
8	+4.348E+00	+6.612E-02	+1.244E-01	+1.466E-01	+34.00	+3.152E-01	-4.337E+32	+3.319E-01	+1.644E+00	+2.789E-03	+0.000E-39	+5.623E-02
8	+4.358E+00	+8.424E-02	+1.348E-01	+1.676E-01	+26.00	+2.252E-01	-2.600E+32	+5.513E-01	+1.361F+00	+2.795E-03	+0.000E-39	+7.085E-02
8	+4.366E+00	+1.036F-01	+1.427E-01	+1.885E-01	+18.30	+1.577E-01	-1.945E+32	+4.912E-01	+1.094F+00	+2.662E-03	+0.000E-39	+8.954E-02
9	+4.371E+00	+1.240E-01	+1.477E-01	+2.094E-01	+10.00	+1.080E-01	-1.432E+32	+3.573E-01	+8.567E-01	+2.424E-03	+0.000E-39	+1.135E-01
9	+4.435E+00	+4.866E-01	+2.117E-01	+5.775E-01	+10.00	+7.981E-02	-3.356E+32	+1.889E-01	+5.797E-01	+5.541E-03	+0.000E-39	+2.887E-01
9	+4.499E+00	+8.692E-01	+2.756E-01	+9.458E-01	+10.00	+6.686E-02	-1.826E+32	+1.395E-01	+4.692F-01	+8.331E-03	+0.000E-39	+3.831E-01
9	+4.563E+00	+1.212E+00	+3.395E-01	+1.314E+00	+10.00	+5.923E-02	-1.150E+32	+1.133E-01	+4.053F-01	+1.077E-02	+0.000E-39	+4.439E-01
9	+4.627E+00	+1.574E+00	+4.035E-01	+1.682E+00	+10.00	+5.416E-02	-8.068E+31	+9.574E-02	+3.648E-01	+1.307E-02	+0.000E-39	+4.865E-01
9	+4.691E+00	+1.937E+00	+4.674E-01	+2.050E+00	+10.00	+5.052E-02	-5.945E+31	+8.532E-02	+3.351E-01	+1.527E-02	+0.000E-39	+5.111E-01
9	+4.755E+00	+2.300E+00	+5.313E-01	+2.419E+00	+10.00	+4.779E-02	-4.552E+31	+7.932E-02	+3.125F-01	+1.742E-02	+0.000E-39	+5.271E-01
9	+4.819E+00	+2.662E+00	+5.953E-01	+2.787E+00	+10.00	+4.566E-02	-3.605E+31	+7.547E-02	+2.948E-01	+1.951E-02	+0.000E-39	+5.347E-01
9	+4.883E+00	+3.025E+00	+6.592E-01	+3.155E+00	+10.00	+4.396E-02	-2.914E+31	+5.533E-02	+2.804E-01	+2.158E-02	+0.000E-39	+5.353E-01
9	+4.947E+00	+3.387E+00	+7.232E-01	+3.523E+00	+10.00	+4.257E-02	-2.397E+31	+5.115E-02	+2.685E-01	+2.363E-02	+0.000E-39	+5.299E-01
10	+5.010E+00	+3.750E+00	+7.871E-01	+3.891E+00	+0.00	+4.202E-02	-1.004E+31	+5.730E-02	+2.610E-01	+2.589E-02	+0.000E-39	+5.240E-01
10	+5.010E+00	+4.125E+00	+7.871E-01	+4.265E+00	+0.00	+4.150E-02	-9.228E-32	+5.586E-02	+2.541E-01	+2.817E-02	+0.000E-39	+5.731E-01
10	+5.010E+00	+4.500E+00	+7.871E-01	+4.641E+00	+0.00	+4.102E-02	-8.534E-32	+5.329E-02	+2.479E-01	+3.042E-02	+0.000E-39	+6.179E-01
10	+5.010E+00	+4.875E+00	+7.871E-01	+5.015E+00	+0.00	+4.057E-02	-7.855E-32	+5.133E-02	+2.423E-01	+3.266E-02	+0.000E-39	+6.589E-01
10	+5.010E+00	+5.250E+00	+7.871E-01	+5.391E+00	+0.00	+4.016E-02	-7.272E-32	+4.956E-02	+2.372E-01	+3.488E-02	+0.000E-39	+6.963E-01
10	+5.010E+00	+5.625E+00	+7.871E-01	+5.765E+00	+0.00	+3.978E-32	-6.745E-32	+4.795E-02	+2.326E-01	+3.709E-02	+0.000E-39	+7.305E-01
10	+5.010E+00	+6.000E+00	+7.871E-01	+6.141E+00	+0.00	+3.943E-02	-6.258E-32	+4.647E-02	+2.283E-01	+3.928E-02	+0.000E-39	+7.615E-01
10	+5.010E+00	+6.375E+00	+7.871E-01	+6.515E+00	+0.00	+3.911E-02	-5.834E-32	+4.512E-02	+2.244E-01	+4.147E-02	+0.000E-39	+7.897E-01
10	+5.010E+00	+6.750E+00	+7.871E-01	+6.891E+00	+0.00	+3.880E-02	-5.439E-32	+4.387E-02	+2.207E-01	+4.364E-02	+0.000E-39	+0.000E-39
10	+5.010E+00	+7.125E+00	+7.871E-01	+7.265E+00	+0.00	+3.851E-02	-5.078E-32	+4.272E-02	+2.173E-01	+4.583E-02	+0.000E-39	+0.000E-39
10	+5.010E+00	+7.500E+00	+7.871E-01	+7.641E+00	+0.00	+3.824E-02	-4.747E-32	+4.164E-02	+2.141E-01	+4.799E-02	+0.000E-39	+0.000E-39
10	+5.010E+00	+7.875E+00	+7.871E-01	+8.015E+00	+0.00	+3.800E-02	-4.444E-32	+4.065E-02	+2.112E-01	+5.011E-02	+0.000E-39	+0.000E-39
10	+5.010E+00	+8.250E+00	+7.871E-01	+8.391E+00	+0.00	+3.776E-02	-4.154E-32	+3.971E-02	+2.084F-01	+5.225E-02	+0.000E-39	+0.000E-39
10	+5.010E+00	+8.625E+00	+7.871E-01	+8.765E+00	+0.00	+3.754E-02	-3.906E-32	+3.884E-02	+2.058E-01	+5.439E-02	+0.000E-39	+0.000E-39
10	+5.010E+00	+9.000E+00	+7.871E-01	+9.141E+00	+0.00	+3.734E-02	-3.658E-32	+3.802E-02	+2.033F-01	+5.652E-02	+0.000E-39	+0.000E-39
10	+5.010E+00	+9.375E+00	+7.871E-01	+9.515E+00	+0.00	+3.714E-32	-3.448E-32	+3.725E-02	+2.010E-01	+5.855E-02	+0.000E-39	+0.000E-39
10	+5.010E+00	+9.750E+00	+7.871E-01	+9.891E+00	+0.00	+3.696E-02	-3.244E-32	+3.653E-02	+1.988E-01	+6.077E-02	+0.000E-39	+0.000E-39
10	+5.010F+00	+1.012E+01	+7.871E-01	+1.027E+01	+0.00	+3.679E-02	-3.054E-32	+3.585E-02	+1.957E-01	+6.293E-02	+0.000E-39	+0.000E-39
10	+5.010E+00	+1.050E+01	+7.871E-01	+1.064E+01	+0.00	+3.663E-02	-2.878E-32	+3.520E-02	+1.947F-01	+6.501E-02	+0.000E-39	+0.000E-39
10	+5.010E+00	+1.087E+01	+7.871E-01	+1.102E+01	+0.00	+3.648E-02	-2.714E-32	+3.458E-02	+1.928E-01	+6.713E-02	+0.000E-39	+0.000E-39
10	+5.010E+00	+1.125E+01	+7.871E-01	+1.139E+01	+0.00	+3.634E-02	-2.551E-32	+3.400E-02	+1.910E-01	+6.925E-02	+0.000E-39	+0.000E-39
9	+4.947E+00	+1.161E+01	+7.232E-01	+1.176E+01	-10.00	+3.634E-02	+0.000E-39	+3.300E-02	+1.898F-01	+7.149E-02	+0.000E-39	+0.000E-39
9	+4.883E+00	+1.198E+01	+6.592E-01	+1.213E+01	-10.00	+3.634E-02	+0.000E-39	+3.250E-02	+1.887E-01	+7.372E-02	+0.000E-39	+0.000E-39
9	+4.819E+00	+1.234E+01	+5.953E-01	+1.250E+01	-10.00	+3.634E-02	+0.000E-39	+3.220E-02	+1.875E-01	+7.596E-02	+0.000E-39	+0.000E-39
9	+4.755E+00	+1.270E+01	+5.313E-01	+1.286E+01	-10.00	+3.634E-02	+0.000E-39	+3.133E-02	+1.864E-01	+7.820E-02	+0.000E-39	+0.000E-39
9	+4.691E+00	+1.306E+01	+4.674E-01	+1.323E+01	-10.00	+3.634E-02	+0.000E-39	+3.145E-02	+1.854E-01	+8.044F-02	+0.000E-39	+0.000E-39
9	+4.627E+00	+1.343E+01	+4.035E-01	+1.359E+01	-10.00	+3.634E-02	+0.000E-39	+3.111E-02	+1.844E-01	+8.267E-02	+0.000E-39	+0.000E-39
9	+4.563E+00	+1.379E+01	+3.395E-01	+1.397E+01	-10.30	+3.634E-02	+0.000E-39	+3.077E-02	+1.834E-01	+8.491E-02	+0.000E-39	+0.000E-39
9	+4.499E+00	+1.415E+01	+2.756E-01	+1.434E+01	-10.00	+3.634E-02	+0.000E-39	+3.044E-02	+1.824E-01	+8.715E-02	+0.000E-39	+0.000E-39
9	+4.435E+00	+1.451E+01	+2.117E-01	+1.471E+01	-10.30	+3.634E-02	+0.000E-39	+3.012E-02	+1.815E-01	+8.939E-02	+0.000E-39	+0.000E-39
9	+4.371E+00	+1.488E+01	+1.477E-01	+1.537E+01	-10.30	+3.634E-02	+0.000E-39	+2.981E-02	+1.806E-01	+9.163E-02	+0.000E-39	+0.000E-39
8	+4.366E+00	+1.490E+01	+1.427E-01	+1.509F+01	-18.00	+2.204E-02	-3.826E+31	+3.505E-02	+1.295E-01	+5.675F-02	+0.000E-39	+0.000E-39
8	+4.358E+00	+1.492E+01	+1.348E-01	+1.512E+01	-26.30	+1.288E-02	-2.417E+31	+2.414E-02	+8.843E-02	+4.697E-02	+0.000E-39	+0.000E-39
8	+4.348E+00	+1.493F+01	+1.244E-01	+1.514E+01	-34.00	+7.219E-03	-1.466E+31	+1.575E-02	+5.966E-02	+3.185F-02	+0.000E-39	+0.000E-39

729

4814

8	+4.335E+00	+1.495E+01	+1.115E-01	+1.516E+01	-42.00	+3.867E-03	-8.501E+00	+1.005E-02	+3.741E-02	+2.075E-02	+0.000E-39	+0.000E-39
8	+4.320E+00	+1.496E+01	+9.642E-02	+1.518E+01	-50.00	+3.598E-03	+0.000E-39	+3.553E-03	+3.549E-02	+1.976E-02	+0.000E-39	+0.000E-39
8	+4.303E+00	+1.498E+01	+7.949E-02	+1.520E+01	-58.00	+3.598E-03	+0.000E-39	+3.553E-03	+3.548E-02	+1.978E-02	+0.000E-39	+0.000E-39
8	+4.284E+00	+1.499E+01	+6.101E-02	+1.522E+01	-66.00	+3.598E-03	+0.000E-39	+3.553E-03	+3.547E-02	+1.981E-02	+0.000E-39	+0.000E-39
8	+4.265E+00	+1.499E+01	+4.135E-02	+1.524E+01	-74.00	+3.598E-03	+0.000E-39	+3.552E-03	+3.546E-02	+1.984E-02	+0.000E-39	+0.000E-39
8	+4.244E+00	+1.500E+01	+2.088E-02	+1.525E+01	-82.00	+3.598E-03	+0.000E-39	+3.552E-03	+3.545E-02	+1.987E-02	+0.000E-39	+0.000E-39
8	+4.223E+00	+1.500E+01	+3.912E-07	+1.523E+01	-90.00	+3.598E-03	+0.000E-39	+3.552E-03	+3.544E-02	+1.989E-02	+0.000E-39	+0.000E-39
4	+4.208E+00	+1.500E+01	+1.568E-02	+1.530E+01	-96.00	+3.598E-03	+0.000E-39	+3.552E-03	+3.543E-02	+1.991E-02	+0.000E-39	+0.000E-39

AT ALPHA = +9.0000E+01, LEEWARD, RW = +2.7633E-01 DELS = +1.8342F-02 3SHOCK = +4.8575F-01

SEC	XO L	XB L	YB L	SB L	THETBL	PE/PS L	DP/DS L	D L	QT L	RF L	QR L	XSI L
8	+4.223E+00	-0.000E-39	+0.000F-39	+0.000E-39	+90.00	+1.000E+00	+4.008E-05	+2.219E+00	+0.000E-39	+0.000E-39	+2.018E-01	+1.834E-02
4	+4.208E+00	+8.218E-04	+1.568E-02	+1.571E-02	+84.00	+9.891E-01	-9.725E+01	+2.194E+00	+1.122F+00	+8.305E-05	+1.398E-01	+1.870E-02
4	+4.192E+00	+3.278F-03	+3.119E-02	+3.142E-02	+78.00	+9.568E-01	-1.903E+02	+2.123E+00	+1.659E+00	+3.243E-04	+2.591E-02	+1.980E-02
4	+4.177E+00	+7.342E-03	+4.635E-02	+4.712E-02	+72.00	+9.045E-01	-2.749E+02	+1.835E+00	+1.775E+00	+5.931E-04	+0.000E-39	+2.167E-02
4	+4.162E+00	+1.297E-02	+6.101E-02	+6.283E-02	+66.00	+8.345E-01	-3.476E+02	+1.776E+00	+1.992E+00	+9.981E-04	+0.000E-39	+2.439E-02
4	+4.148E+00	+2.010E-02	+7.500E-02	+7.854E-02	+60.00	+7.500E-01	-4.051E+02	+1.664E+00	+2.109F+00	+1.452E-03	+0.000E-39	+2.803E-02
4	+4.135E+00	+2.865E-02	+8.817E-02	+9.425E-02	+54.00	+6.545E-01	-4.449E+02	+1.519E+00	+2.134E+00	+1.903E-03	+0.000E-39	+3.274E-02
4	+4.135E+00	+3.690E-02	+9.853E-02	+1.075E-01	+48.94	+5.685E-01	-4.633E+02	+1.377E+00	+2.088E+00	+2.249E-03	+0.000E-39	+3.765E-02
4	+4.123E+00	+3.853F-02	+1.004E-01	+1.100E-01	+48.30	+5.539E-01	-4.652E+02	+1.357E+00	+2.074F+00	+2.306E-03	+0.000E-39	+3.866E-02
4	+4.112E+00	+4.963E-02	+1.115E-01	+1.257E-01	+42.00	+4.497E-01	-4.652E+02	+1.150E+00	+1.935E+00	+2.613E-03	+0.000E-39	+4.602E-02
4	+4.102E+00	+6.183E-02	+1.214E-01	+1.414E-01	+36.00	+3.478E-01	-4.449E+02	+9.595E-01	+1.727E+00	+2.774E-03	+0.000E-39	+5.508E-02
4	+4.093E+00	+7.500E-02	+1.299E-01	+1.571E-01	+30.00	+2.709E-01	-3.037E+02	+7.755E-01	+1.512E+00	+2.827E-03	+0.000E-39	+6.620E-02
3	+3.701E+00	+7.550E-01	+5.225E-01	+9.423E-01	+30.00	+2.529E-01	-8.030E-02	+2.319E-01	+1.022E+00	+1.651E-02	+0.000F-39	+2.587E-01
3	+3.308E+00	+1.435E+00	+9.151E-01	+1.727E+00	+30.00	+2.527E-01	-9.255E-34	+2.089E-01	+9.051E-01	+3.026E-02	+0.000E-39	+3.554E-01
3	+2.916E+00	+2.115E+00	+1.308E+00	+2.513E+00	+30.00	+2.527E-01	+3.942E-35	+1.735E-01	+8.398E-01	+4.402E-02	+0.000E-39	+4.361E-01
3	+2.523E+00	+2.795E+00	+1.700E+00	+3.298E+00	+30.00	+2.527E-01	+2.158E-35	+1.518E-01	+7.953E-01	+5.777E-02	+0.000E-39	+5.110E-01
3	+2.130E+00	+3.475E+00	+2.093E+00	+4.083E+00	+30.00	+2.527E-01	+2.553E-35	+1.355E-01	+7.621E-01	+7.158E-02	+0.000E-39	+5.831E-01
3	+1.738E+00	+4.155E+00	+2.485E+00	+4.868E+00	+30.00	+2.527E-01	-0.000E-39	+1.252E-01	+7.357E-01	+8.528E-02	+0.000E-39	+6.537E-01
3	+1.345E+00	+4.835E+00	+2.878E+00	+5.653E+00	+30.00	+2.527E-01	-0.000E-39	+1.152E-01	+7.141E-01	+9.904E-02	+0.000E-39	+7.234E-01
3	+9.527E-01	+5.515E+00	+3.271E+00	+6.439E+00	+30.00	+2.527E-01	-0.000E-39	+1.039E-01	+6.957E-01	+1.128E-01	+0.000E-39	+7.925E-01
3	+5.601E-01	+6.195E+00	+3.663E+00	+7.224E+00	+30.00	+2.527E-01	-0.000E-39	+1.329E-01	+6.799E-01	+1.265E-01	+0.000E-39	+8.611E-01
3	+1.675E-01	+6.875E+00	+4.056E+00	+8.009E+00	+30.00	+2.527E-01	+0.000E-39	+9.773E-02	+6.650E-01	+1.403E-01	+0.000E-39	+9.296E-01
1	+1.362E-01	+6.933E+00	+4.087E+00	+8.074E+00	+27.00	+2.221E-01	-3.035E+01	+1.149E-01	+6.227E-01	+1.343E-01	+0.000E-39	+9.424E-01
1	+1.081E-01	+6.992E+00	+4.115E+00	+8.140E+00	+24.00	+1.945E-01	-2.757E+01	+1.344E-01	+5.793E-01	+1.272E-01	+0.000E-39	+9.616E-01
1	+8.302E-02	+7.052E+00	+4.140E+00	+8.205E+00	+21.00	+1.701E-01	-2.432E+01	+9.454E-02	+5.371E-01	+1.203E-01	+0.000E-39	+9.874E-01
1	+6.118E-02	+7.114E+00	+4.162E+00	+8.271E+00	+18.00	+1.484E-01	-2.222E+01	+8.549E-02	+4.963E-01	+1.132E-01	+0.000E-39	+1.020E+00
1	+4.259E-02	+7.176E+00	+4.181E+00	+8.336E+00	+15.00	+1.288E-01	-1.933E+01	+7.535E-02	+4.550E-01	+1.061E-01	+0.000E-39	+1.060E+00
1	+2.732E-02	+7.240E+00	+4.196E+00	+8.402E+00	+12.00	+1.114E-01	-1.752E+01	+6.379E-02	+4.172E-01	+9.890E-02	+0.000E-39	+1.108E+00
1	+1.539E-02	+7.304E+00	+4.208E+00	+8.467E+00	+9.00	+9.581E-02	-1.559E+01	+5.127E-02	+3.798E-01	+9.171E-02	+0.000E-39	+1.165E+00
1	+6.848E-03	+7.369E+00	+4.217E+00	+8.533E+00	+6.00	+8.257E-02	-1.381E+01	+5.454E-02	+3.456E-01	+8.495E-02	+0.000E-39	+1.231E+00
1	+1.713E-03	+7.435E+00	+4.222E+00	+8.598E+00	+3.00	+7.082E-02	-1.218E+01	+4.349E-02	+3.131E-01	+7.834E-02	+0.000E-39	+1.309E+00
1	+0.000E-39	+7.500E+00	+4.223E+00	+8.664E+00	+0.00	+5.965E-02	-1.057E+01	+4.233E-02	+2.799E-01	+7.132F-02	+0.000E-39	+1.399E+00
1	+1.713E-03	+7.565E+00	+4.222E+00	+8.729E+00	-3.00	+5.033E-02	-9.138E+00	+3.737E-02	+2.502E-01	+6.487E-02	+0.000E-39	+1.504E+00
1	+6.848E-03	+7.631E+00	+4.217E+00	+8.794E+00	-6.00	+4.244E-02	-7.972E+00	+3.244E-02	+2.232E-01	+5.888E-02	+0.000E-39	+1.625E+00
1	+1.539E-02	+7.696E+00	+4.208E+00	+8.860E+00	-9.00	+3.562E-02	-6.835E+00	+2.825E-02	+1.982E-01	+5.319E-02	+0.000E-39	+1.766E+00
1	+2.732E-02	+7.760E+00	+4.196E+00	+8.925E+00	-12.00	+2.967E-02	-5.904E+00	+2.445E-02	+1.749E-01	+4.775E-02	+0.000E-39	+1.931E+00
1	+4.259E-02	+7.824E+00	+4.181E+00	+8.991E+00	-15.00	+2.458E-02	-5.035E+00	+2.108E-02	+1.537E-01	+4.255E-02	+0.000E-39	+2.124E+00
1	+6.118E-02	+7.886E+00	+4.162E+00	+9.055E+00	-18.00	+2.032E-02	-4.239E+00	+1.817E-02	+1.346E-01	+3.799E-02	+0.000E-39	+2.353E+00
1	+8.302E-02	+7.948E+00	+4.140E+00	+9.122E+00	-21.00	+1.673E-02	-3.629E+00	+1.559E-02	+1.174E-01	+3.369F-02	+0.000E-39	+2.627E+00
1	+1.081E-01	+8.008E+00	+4.115E+00	+9.187E+00	-24.30	+1.362E-02	-3.043E+00	+1.327E-02	+1.016E-01	+2.963E-02	+0.000E-39	+2.958E+00
1	+1.362E-01	+8.067E+00	+4.087E+00	+9.253E+00	-27.00	+1.106E-02	-2.543E+00	+1.123E-02	+8.762E-02	+2.597E-02	+0.000E-39	+3.365E+00
3	+1.675E-01	+8.125E+00	+4.056E+00	+9.313E+00	-30.00	+8.957E-03	-2.120E+00	+9.599E-03	+7.537E-02	+2.269E-02	+0.000E-39	+3.875E+00
3	+5.601E-01	+8.805E+00	+3.663E+00	+1.010E+01	-30.00	+8.957E-03	+0.000E-39	+5.515E-03	+7.416E-02	+2.461E-02	+0.000E-39	+5.552E+00
3	+9.527E-01	+9.485E+00	+3.271E+00	+1.089E+01	-30.00	+8.957E-03	+0.000E-39	+5.500E-03	+7.306E-02	+2.652E-02	+0.000E-39	+7.228E+00
3	+1.345E+00	+1.016E+01	+2.878E+00	+1.167E+01	-30.30	+8.957E-03	+0.000E-39	+5.485E-03	+7.205E-02	+2.843E-02	+0.000E-39	+8.904E+00
3	+1.738E+00	+1.084E+01	+2.485E+00	+1.246E+01	-30.00	+8.957E-03	+0.000E-39	+5.471E-03	+7.112E-02	+3.034E-02	+0.000E-39	+0.000E-39
3	+2.130E+00	+1.152E+01	+2.093E+00	+1.324E+01	-30.30	+8.957E-03	+0.000E-39	+5.457E-03	+7.025E-02	+3.226F-02	+0.000E-39	+0.000E-39
3	+2.523E+00	+1.220E+01	+1.700E+00	+1.403E+01	-30.00	+8.957E-03	+0.000E-39	+5.443E-03	+6.945E-02	+3.417E-02	+0.000E-39	+0.000E-39
3	+2.916E+00	+1.288E+01	+1.308E+00	+1.481E+01	-30.00	+8.957E-03	+0.000E-39	+5.428E-03	+6.870E-02	+3.608E-02	+0.000E-39	+0.000E-39
3	+3.308E+00	+1.356E+01	+9.151E-01	+1.560E+01	-30.00	+8.957E-03	+0.000E-39	+5.415E-03	+6.799E-02	+3.799E-02	+0.000E-39	+0.000E-39
3	+3.701E+00	+1.424E+01	+5.225E-01	+1.638E+01	-30.30	+8.957E-03	+0.000E-39	+5.401E-03	+6.733E-02	+3.991E-02	+0.000E-39	+0.000E-39
4	+4.093E+00	+1.492E+01	+1.299E-01	+1.717E+01	-30.70	+8.957E-03	+0.000E-39	+5.387E-03	+6.670E-02	+4.182E-02	+0.000E-39	+0.000E-39
4	+4.102E+00	+1.494E+01	+1.214E-01	+1.719E+01	-36.00	+5.791E-03	-1.203E+01	+1.193E-02	+4.859E-02	+3.095E-02	+0.000E-39	+0.000E-39
4	+4.112E+00	+1.495E+01	+1.115E-01	+1.720E+01	-42.30	+3.598E-03	+0.000E-39	+2.993E-03	+3.461F-02	+2.239F-02	+0.000E-39	+0.000E-39
4	+4.123E+00	+1.496E+01	+1.004E-01	+1.722E+01	-48.30	+3.598E-03	+0.000E-39	+2.993E-03	+3.461E-02	+2.241F-02	+0.000E-39	+0.000E-39
4	+4.135E+00	+1.497E+01	+8.817E-02	+1.723E+01	-54.00	+3.598E-03	+0.000E-39	+2.993E-03	+3.460E-02	+2.243E-02	+0.000E-39	+0.000E-39

4	+4.148E+00	+1.498E+01	+7.500E-02	+1.725E+01	-60.00	+3.598E-03	+0.000E-39	+2.293E-03	+3.459E-02	+2.245E-02	+0.000E-39	+0.000E-39
4	+4.162E+00	+1.499E+01	+6.101E-02	+1.725E+01	-66.00	+3.598E-03	+0.000E-39	+2.293E-03	+3.459E-02	+2.247E-02	+0.000E-39	+0.000E-39
4	+4.177E+00	+1.499E+01	+4.635E-02	+1.728E+01	-72.00	+3.598E-03	+0.000E-39	+2.293E-03	+3.458E-02	+2.249E-02	+0.000E-39	+0.000E-39
4	+4.192E+00	+1.500E+01	+3.119E-02	+1.730E+01	-78.00	+3.598E-03	+0.000E-39	+2.293E-03	+3.458E-02	+2.251E-02	+0.000E-39	+0.000E-39
4	+4.208E+00	+1.500E+01	+1.568E-02	+1.731E+01	-84.00	+3.598E-03	+0.000E-39	+2.293E-03	+3.457E-02	+2.253E-02	+0.000E-39	+0.000E-39
8	+4.223E+00	+1.500E+01	+3.912E-07	+1.733E+01	-90.00	+3.598E-03	+0.000E-39	+2.293E-03	+3.456E-02	+2.255E-02	+0.000E-39	+0.000E-39

I ST	X ST	Y ST	S ST	DTDS ST	THET ST	SECT	ALPHA
35	+4.29835E+00	+7.47990E+00	+8.74208E+00	-6.66667E+00	-3.00000E+01	8	+120.00

IW SN	XOW SN	YOW SN	XBW SN	YBW SN	SBW SN	THETW SN	SECT	ALPHA
7	+4.35817E+00	+7.41576E+00	+3.69013E-02	+9.85329E-02	+1.07502E-01	+4.89372E+01	8	+120.00

IL SN	XOL SN	YOL SN	XBL SN	YBL SN	SBL SN	THETL SN	SECT	ALPHA
7	+4.20767E+00	+7.49918E+00	+3.69014E-02	+9.85327E-02	+1.07502E-01	+4.89372E+01	4	+120.00

AT ALPHA = +1.2000E+02 WINDWARD, RW = +2.7633E-01 DELS = +1.8342E-02 ETADOT = +5.7912E-01

SEC	XO W	XB W	YB W	SB W	THETBW	PE/PS W	DP/DS W	D_ W	QT W	RF W	QR W	XSI W
8	+4.298E+00	-0.000E-39	+0.000E-39	+0.000E-39	+90.00	+1.000E+00	+4.008E-05	+3.133E+00	+0.000E-39	+0.000E-39	+2.018E-01	+1.834E-02
8	+4.303E+00	+9.137E-05	+5.235E-03	+5.235E-03	+88.00	+9.983E-01	-4.535E+01	+3.132E+00	+5.844E-01	+9.290E-05	+1.798E-01	+1.838E-02
8	+4.320E+00	+2.279E-03	+2.605E-02	+2.618E-02	+80.00	+9.573E-01	-2.231E+02	+3.004E+00	+1.487E+00	+2.253E-04	+2.819E-02	+1.935E-02
8	+4.335E+00	+7.341E-03	+4.635E-02	+4.712E-02	+72.00	+8.695E-01	-3.550E+02	+2.899E+00	+1.956E+00	+5.793E-04	+0.000E-39	+2.168E-02
8	+4.348E+00	+1.518E-02	+6.576E-02	+6.807E-02	+64.00	+7.533E-01	-4.059E+02	+2.552E+00	+2.165E+00	+1.251E-03	+0.000E-39	+2.551E-02
8	+4.358E+00	+2.564E-02	+8.388E-02	+8.901E-02	+56.30	+6.380E-01	-3.433E+02	+2.155E+00	+2.156E+00	+1.815E-03	+0.000E-39	+3.109E-02
8	+4.358E+00	+3.690E-02	+9.853E-02	+1.075E-01	+48.94	+5.685E-01	-1.627E+02	+1.840E+00	+2.088E+00	+2.249E-03	+0.000E-39	+3.776E-02
8	+4.366E+00	+3.853E-02	+1.004E-01	+1.100E-01	+48.00	+5.539E-01	-4.652E+01	+1.899E+00	+2.074E+00	+2.306E-03	+0.000E-39	+3.878E-02
9	+4.371E+00	+5.358E-02	+1.149E-01	+1.309E-01	+40.00	+4.153E-01	+0.000E-39	+1.353E+00	+1.873E+00	+2.585E-03	+0.000E-39	+4.908E-02
9	+4.435E+00	+3.356E-01	+3.516E-01	+4.991E-01	+40.00	+4.153E-01	+0.000E-39	+5.553E-01	+1.437E+00	+1.024E-02	+0.000E-39	+1.206E-01
9	+4.499E+00	+6.177E-01	+5.883E-01	+8.673E-01	+40.00	+4.153E-01	+0.000E-39	+4.923E-01	+1.283E+00	+1.779E-02	+0.000E-39	+1.349E-01
9	+4.563E+00	+8.998E-01	+8.249E-01	+1.235E+00	+40.30	+4.153E-01	+0.000E-39	+4.114E-01	+1.195E+00	+2.534E-02	+0.000E-39	+1.341E-01
9	+4.627E+00	+1.182E+00	+1.062E+00	+1.594E+00	+40.00	+4.153E-01	+0.000E-39	+3.504E-01	+1.135E+00	+3.289E-02	+0.000E-39	+1.269E-01
9	+4.691E+00	+1.464E+00	+1.298E+00	+1.972E+00	+40.00	+4.153E-01	+0.000E-39	+3.246E-01	+1.089E+00	+4.044E-02	+0.000E-39	+1.164E-01
9	+4.755E+00	+1.746E+00	+1.535E+00	+2.340E+00	+40.30	+4.153E-01	+0.000E-39	+2.977E-01	+1.052E+00	+4.799E-02	+0.000E-39	+1.039E-01
9	+4.819E+00	+2.028E+00	+1.772E+00	+2.708E+00	+40.00	+4.153E-01	+0.000E-39	+2.755E-01	+1.022E+00	+5.554E-02	+0.000E-39	+9.024E-02
9	+4.883E+00	+2.310E+00	+2.008E+00	+3.075E+00	+40.30	+4.153E-01	+0.000E-39	+2.594E-01	+9.960E-01	+6.310E-02	+0.000E-39	+7.573E-02
9	+4.947E+00	+2.592E+00	+2.245E+00	+3.445E+00	+40.00	+4.153E-01	+0.000E-39	+2.452E-01	+9.737E-01	+7.065E-02	+0.000E-39	+6.063E-02
10	+5.010E+00	+2.874E+00	+2.482E+00	+3.813E+00	+30.00	+4.153E-01	+0.000E-39	+2.328E-01	+9.541E-01	+7.820E-02	+0.000E-39	+4.544E-02
10	+5.010E+00	+3.199E+00	+2.669E+00	+4.188E+00	+30.00	+4.153E-01	+0.000E-39	+2.221E-01	+9.354E-01	+8.589E-02	+0.000E-39	+9.502E-02
10	+5.010E+00	+3.524E+00	+2.857E+00	+4.563E+00	+30.00	+4.153E-01	+0.000E-39	+2.127E-01	+9.205E-01	+9.358E-02	+0.000E-39	+1.443E-01
10	+5.010E+00	+3.848E+00	+3.044E+00	+4.938E+00	+30.00	+4.153E-01	+0.000E-39	+2.045E-01	+9.060E-01	+1.013E-01	+0.000E-39	+1.934E-01
10	+5.010E+00	+4.173E+00	+3.232E+00	+5.313E+00	+30.00	+4.153E-01	+0.000E-39	+1.971E-01	+8.929E-01	+1.090E-01	+0.000E-39	+2.424E-01
10	+5.010E+00	+4.498E+00	+3.419E+00	+5.688E+00	+30.00	+4.153E-01	+0.000E-39	+1.905E-01	+8.808E-01	+1.167E-01	+0.000E-39	+2.912E-01
10	+5.010E+00	+4.823E+00	+3.607E+00	+6.063E+00	+30.00	+4.153E-01	+0.000E-39	+1.845E-01	+8.696E-01	+1.243E-01	+0.000E-39	+3.399E-01
10	+5.010E+00	+5.147E+00	+3.794E+00	+6.438E+00	+30.00	+4.153E-01	+0.000E-39	+1.790E-01	+8.592E-01	+1.320E-01	+0.000E-39	+3.885E-01
10	+5.010E+00	+5.472E+00	+3.982E+00	+6.813E+00	+30.00	+4.153E-01	+0.000E-39	+1.740E-01	+8.496E-01	+1.397E-01	+0.000E-39	+4.370E-01
10	+5.010E+00	+5.797E+00	+4.169E+00	+7.188E+00	+30.00	+4.153E-01	+0.000E-39	+1.694E-01	+8.405E-01	+1.474E-01	+0.000E-39	+4.854E-01
10	+5.010E+00	+6.122E+00	+4.357E+00	+7.563E+00	+30.00	+4.153E-01	+0.000E-39	+1.651E-01	+8.320E-01	+1.551E-01	+0.000E-39	+5.338E-01
10	+5.010E+00	+6.447E+00	+4.544E+00	+7.938E+00	+30.00	+4.153E-01	+0.000E-39	+1.611E-01	+8.240E-01	+1.628E-01	+0.000E-39	+5.822E-01
10	+5.010E+00	+6.771E+00	+4.732E+00	+8.313E+00	+30.00	+4.153E-01	+0.000E-39	+1.575E-01	+8.164E-01	+1.705E-01	+0.000E-39	+6.305E-01
10	+5.010E+00	+7.096E+00	+4.919E+00	+8.688E+00	+30.00	+4.153E-01	+0.000E-39	+1.540E-01	+8.092E-01	+1.782E-01	+0.000E-39	+6.787E-01
10	+5.010E+00	+7.421E+00	+5.107E+00	+9.063E+00	+30.00	+4.153E-01	+0.000E-39	+1.508E-01	+8.024E-01	+1.859E-01	+0.000E-39	+7.270E-01
10	+5.010E+00	+7.746E+00	+5.294E+00	+9.438E+00	+30.00	+4.153E-01	+0.000E-39	+1.478E-01	+7.959E-01	+1.936E-01	+0.000E-39	+7.752E-01
10	+5.010E+00	+8.070E+00	+5.482E+00	+9.813E+00	+30.00	+4.153E-01	+0.000E-39	+1.449E-01	+7.898E-01	+2.013E-01	+0.000E-39	+8.233E-01
10	+5.010E+00	+8.395E+00	+5.669E+00	+1.019E+01	+30.00	+4.153E-01	+0.000E-39	+1.422E-01	+7.839E-01	+2.089E-01	+0.000E-39	+8.715E-01
10	+5.010E+00	+8.720E+00	+5.857E+00	+1.056E+01	+30.00	+4.153E-01	+0.000E-39	+1.396E-01	+7.782E-01	+2.166E-01	+0.000E-39	+9.195E-01
10	+5.010E+00	+9.045E+00	+6.044E+00	+1.094E+01	+30.00	+4.153E-01	+0.000E-39	+1.372E-01	+7.728E-01	+2.243E-01	+0.000E-39	+9.677E-01
10	+5.010E+00	+9.369E+00	+6.232E+00	+1.131E+01	+30.00	+4.153E-01	+0.000E-39	+1.349E-01	+7.676E-01	+2.320E-01	+0.000E-39	+1.016E+00
9	+4.947E+00	+9.715E+00	+6.358E+00	+1.168E+01	+20.30	+4.153E-01	+0.000E-39	+1.328E-01	+7.627E-01	+2.396E-01	+0.000E-39	+1.170E+00
9	+4.883E+00	+1.006E+01	+6.484E+00	+1.205E+01	+20.30	+4.153E-01	+0.000E-39	+1.307E-01	+7.580E-01	+2.471E-01	+0.000E-39	+1.285E+00
9	+4.819E+00	+1.041E+01	+6.609E+00	+1.242E+01	+20.00	+4.153E-01	+0.000E-39	+1.288E-01	+7.534E-01	+2.547E-01	+0.000E-39	+1.399E+00
9	+4.755E+00	+1.075E+01	+6.735E+00	+1.279E+01	+20.00	+4.153E-01	+0.000E-39	+1.269E-01	+7.491E-01	+2.622E-01	+0.000E-39	+1.514E+00
9	+4.691E+00	+1.110E+01	+6.861E+00	+1.315E+01	+20.00	+4.153E-01	+0.000E-39	+1.251E-01	+7.448E-01	+2.698E-01	+0.000E-39	+1.629E+00
9	+4.627E+00	+1.145E+01	+6.987E+00	+1.352E+01	+20.00	+4.153E-01	+0.000E-39	+1.234E-01	+7.407E-01	+2.773E-01	+0.000E-39	+1.743E+00
9	+4.563E+00	+1.179E+01	+7.113E+00	+1.389E+01	+20.00	+4.153E-01	+0.000E-39	+1.217E-01	+7.367E-01	+2.849E-01	+0.000E-39	+1.858E+00
9	+4.499E+00	+1.214E+01	+7.239E+00	+1.426E+01	+20.00	+4.153E-01	+0.000E-39	+1.202E-01	+7.329E-01	+2.924E-01	+0.000E-39	+1.973E+00
9	+4.435E+00	+1.248E+01	+7.365E+00	+1.463E+01	+20.00	+4.153E-01	+0.000E-39	+1.186E-01	+7.292E-01	+3.000E-01	+0.000E-39	+2.087E+00
9	+4.371E+00	+1.283E+01	+7.491E+00	+1.499E+01	+20.00	+4.153E-01	+0.000E-39	+1.172E-01	+7.255E-01	+3.075E-01	+0.000E-39	+2.202E+00
8	+4.366E+00	+1.285E+01	+7.497E+00	+1.502E+01	+12.30	+4.667E-02	-1.903E+02	+5.168E-02	+2.135E-01	+1.066E-01	+0.000E-39	+2.334E+00
8	+4.358E+00	+1.287E+01	+7.500E+00	+1.504E+01	+4.00	+2.900E-02	-4.827E+01	+4.313E-02	+1.552E-01	+7.930E-02	+0.000E-39	+2.537E+00
8	+4.348E+00	+1.289E+01	+7.500E+00	+1.506E+01	-4.00	+1.723E-02	-3.102E+01	+3.315E-02	+1.085E-01	+5.672E-02	+0.000E-39	+2.839E+00
8	+4.335E+00	+1.291E+01	+7.497E+00	+1.508E+01	-12.00	+9.854E-03	-1.919E+01	+2.358E-02	+7.325E-02	+3.917E-02	+0.000E-39	+3.293E+00
8	+4.320E+00	+1.293E+01	+7.491E+00	+1.510E+01	-20.00	+5.397E-03	-1.138E+01	+1.387E-02	+4.763E-02	+2.603E-02	+0.000E-39	+4.006E+00
8	+4.303E+00	+1.295E+01	+7.482E+00	+1.512E+01	-28.30	+3.598E-03	+0.000E-39	+2.175E-03	+3.552E-02	+1.969E-02	+0.000E-39	+5.222E+00
8	+4.298E+00	+1.296E+01	+7.480E+00	+1.513E+01	-30.00	+3.598E-03	+0.000E-39	+2.175E-03	+3.551E-02	+1.969E-02	+0.000E-39	+5.666E+00

485<

72k

8	+4.284E+00	+1.297E+01	+7.471E+00	+1.514E+01	-36.00	+3.598E-03	+0.000E-39	+2.175E-03	+3.551E-02	+1.971E-02	+0.000E-39	+7.658E+00
8	+4.265E+00	+1.298E+01	+7.458E+00	+1.515E+01	-44.00	+3.598E-03	+0.000E-39	+2.175E-03	+3.550E-02	+1.974E-02	+0.000E-39	+0.000E-39
8	+4.244E+00	+1.300E+01	+7.442E+00	+1.518E+01	-52.00	+3.598E-03	+0.000E-39	+2.175E-03	+3.549E-02	+1.976E-02	+0.000E-39	+0.000E-39
8	+4.223E+00	+1.301E+01	+7.425E+00	+1.520E+01	-60.00	+3.598E-03	+0.000E-39	+2.175E-03	+3.548E-02	+1.979E-02	+0.000E-39	+0.000E-39
4	+4.208E+00	+1.302E+01	+7.411E+00	+1.522E+01	-66.00	+3.598E-03	+0.000E-39	+2.175E-03	+3.547E-02	+1.981E-02	+0.000E-39	+0.000E-39
4	+4.192E+00	+1.302E+01	+7.396E+00	+1.524E+01	-72.00	+3.598E-03	+0.000E-39	+2.175E-03	+3.546E-02	+1.983E-02	+0.000E-39	+0.000E-39
4	+4.177E+00	+1.303E+01	+7.381E+00	+1.525E+01	-78.00	+3.598E-03	+0.000E-39	+2.175E-03	+3.546E-02	+1.985E-02	+0.000E-39	+0.000E-39
4	+4.162E+00	+1.303E+01	+7.366E+00	+1.527E+01	-84.00	+3.598E-03	+0.000E-39	+2.175E-03	+3.545E-02	+1.987E-02	+0.000E-39	+0.000E-39
4	+4.148E+00	+1.303E+01	+7.350E+00	+1.528E+01	-90.00	+3.598E-03	+0.000E-39	+2.175E-03	+3.544E-02	+1.989E-02	+0.000E-39	+0.000E-39
4	+4.135E+00	+1.303E+01	+7.334E+00	+1.530E+01	-96.00	+3.598E-03	+0.000E-39	+2.175E-03	+3.543E-02	+1.991E-02	+0.000E-39	+0.000E-39

AT ALPHA = +1.2000E+02, LEEWARD, RW = +2.7633E-01 DELS = +1.8342E-02 BSHOCK = -1.414BE+00
SKIP CASE, YW IMAGINARY FOR RW = +2.7633E-01 DELS = +1.8342E-02 BSHOCK = -1.41+3E+00

SEC	XO L	XB L	YB L	SB L	THETBL	PE/PS L	DP/DS L	JL L	QT L	RE L	QR L	XSI L
8	+4.298E+00	-0.000E-39	+0.000E-39	+0.000E-39	+90.00	+1.000E+00	+4.008E-05	+3.138E+00	+0.000E-39	+0.000E-39	+7.018E-01	+1.834E-02
8	+4.284E+00	+8.217E-04	+1.568E-02	+1.571E-02	+84.00	+9.844E-01	-1.333E+02	+3.389E+00	+1.118E+00	+8.276E-05	+1.231E-01	+1.870E-02
8	+4.265E+00	+4.456E-03	+3.629E-02	+3.665E-02	+76.00	+9.183E-01	-2.959E+02	+2.881E+00	+1.764E+00	+4.284E-04	+0.000E-39	+2.030E-02
8	+4.244E+00	+1.092E-02	+5.619E-02	+5.760E-02	+68.00	+8.133E-01	-3.932E+02	+2.711E+00	+2.095E+00	+9.588E-04	+0.000E-39	+2.318E-02
8	+4.223E+00	+2.010E-02	+7.500E-02	+7.854E-02	+60.00	+6.933E-01	-3.917E+02	+2.351E+00	+2.185E+00	+1.541E-03	+0.000E-39	+2.732E-02
4	+4.208E+00	+2.865E-02	+8.817E-02	+9.423E-02	+54.00	+6.138E-01	-3.051E+02	+2.055E+00	+2.148E+00	+1.944E-03	+0.000E-39	+3.121E-02
4	+4.208E+00	+3.690E-02	+9.853E-02	+1.075E-01	+48.94	+5.685E-01	-1.627E+02	+1.835E+00	+2.088E+00	+2.249E-03	+0.000E-39	+3.500E-02
4	+4.192E+00	+3.853E-02	+1.004E-01	+1.100E-01	+48.00	+5.539E-01	-4.652E+02	+1.834E+00	+2.074E+00	+2.306E-03	+0.000E-39	+3.575E-02
4	+4.177E+00	+4.963E-02	+1.115E-01	+1.257E-01	+42.00	+4.497E-01	-4.652E+02	+1.516E+00	+1.935E+00	+2.613E-03	+0.000E-39	+4.086E-02
4	+4.162E+00	+6.183E-02	+1.214E-01	+1.414E-01	+36.00	+3.478E-01	-4.449E+00	+1.339E+00	+1.727E+00	+2.774E-03	+0.000E-39	+4.646E-02
4	+4.148E+00	+7.500E-02	+1.299E-01	+1.571E-01	+30.00	+2.705E-01	-3.037E+02	+1.094E+00	+1.512E+00	+2.827E-03	+0.000E-39	+5.241E-02
4	+4.135E+00	+8.899E-02	+1.370E-01	+1.728E-01	+24.00	+2.097E-01	-2.452E+02	+8.730E-01	+1.303E+00	+2.795E-03	+0.000E-39	+5.853E-02
4	+4.123E+00	+1.036E-01	+1.427E-01	+1.885E-01	+18.00	+1.599E-01	-1.957E+02	+7.307E-01	+1.103E+00	+2.680E-03	+0.000E-39	+6.461E-02
4	+4.112E+00	+1.186E-01	+1.467E-01	+2.042E-01	+12.00	+1.210E-01	-1.573E+02	+5.547E-01	+9.221E-01	+2.513E-03	+0.000E-39	+7.040E-02
4	+4.102E+00	+1.343E-01	+1.492E-01	+2.199E-01	+6.00	+8.933E-02	-1.227E+02	+4.299E-01	+7.547E-01	+2.290E-03	+0.000E-39	+7.564E-02
4	+4.093E+00	+1.500E-01	+1.500E-01	+2.356E-01	+0.00	+6.548E-02	-9.516E+01	+3.309E-01	+6.113E-01	+2.050E-03	+0.000E-39	+8.009E-02
3	+3.701E+00	+9.352E-01	+1.500E-01	+1.021E+00	+0.00	+3.106E-02	-1.230E+00	+1.114E-01	+2.784E-01	+5.622E-03	+0.000E-39	+0.000E-39
3	+3.308E+00	+1.720E+00	+1.500E-01	+1.806E+00	+0.00	+2.181E-02	-5.395E-01	+7.204E-02	+1.951E-01	+7.931E-03	+0.000E-39	+0.000E-39
3	+2.916E+00	+2.506E+00	+1.500E-01	+2.591E+00	+0.00	+2.183E-02	+0.000E-39	+5.345E-02	+1.817E-01	+1.139E-02	+0.000E-39	+0.000E-39
3	+2.523E+00	+3.291E+00	+1.500E-01	+3.376E+00	+0.00	+1.896E-02	-2.159E-01	+5.422E-02	+1.563E-01	+1.354E-02	+0.000E-39	+0.000E-39
3	+2.130E+00	+4.076E+00	+1.500E-01	+4.162E+00	+0.00	+1.687E-02	-1.616E-01	+4.622E-02	+1.382E-01	+1.546E-02	+0.000E-39	+0.000E-39
3	+1.738E+00	+4.861E+00	+1.500E-01	+4.947E+00	+0.00	+1.527E-02	-1.250E-01	+4.342E-02	+1.246E-01	+1.721E-02	+0.000E-39	+0.000E-39
3	+1.345E+00	+5.646E+00	+1.500E-01	+5.732E+00	+0.00	+1.401E-02	-1.014E-01	+3.596E-02	+1.139E-01	+1.883E-02	+0.000E-39	+0.000E-39
3	+9.527E-01	+6.432E+00	+1.500E-01	+6.517E+00	+0.00	+1.298E-02	-8.351E-02	+3.246E-02	+1.052E-01	+2.035E-02	+0.000E-39	+0.000E-39
3	+5.601E-01	+7.217E+00	+1.500E-01	+7.302E+00	+0.00	+1.212E-02	-7.015E-02	+2.953E-02	+9.802E-02	+2.179E-02	+0.000E-39	+0.000E-39
3	+1.675E-01	+8.002E+00	+1.500E-01	+8.088E+00	+0.00	+1.140E-02	-5.935E-02	+2.728E-02	+9.196E-02	+2.316E-02	+0.000E-39	+0.000E-39
1	+1.362E-01	+8.067E+00	+1.483E-01	+8.153E+00	-3.00	+9.249E-03	-2.130E+00	+2.744E-02	+7.920E-02	+2.029E-02	+0.000E-39	+0.000E-39
1	+1.081E-01	+8.133E+00	+1.432E-01	+8.218E+00	-6.00	+7.425E-03	-1.802E+00	+2.275E-02	+6.753E-02	+1.753E-02	+0.000E-39	+0.000E-39
1	+8.302E-02	+8.198E+00	+1.346E-01	+8.284E+00	-9.00	+5.932E-03	-1.433E+00	+1.830E-02	+5.749E-02	+1.524E-02	+0.000E-39	+0.000E-39
1	+6.118E-02	+8.262E+00	+1.227E-01	+8.349E+00	-12.00	+4.728E-03	-1.216E+00	+1.553E-02	+4.875E-02	+1.314E-02	+0.000E-39	+0.000E-39
1	+4.259E-02	+8.325E+00	+1.074E-01	+8.415E+00	-15.00	+3.761E-03	-9.957E-01	+1.282E-02	+4.124E-02	+1.130E-02	+0.000E-39	+0.000E-39
1	+2.732E-02	+8.388E+00	+8.882E-02	+8.480E+00	-18.00	+3.598E-03	+0.000E-39	+1.073E-02	+3.987E-02	+1.104E-02	+0.000E-39	+0.000E-39
1	+1.539E-02	+8.450E+00	+6.697E-02	+8.545E+00	-21.00	+3.598E-03	+0.000E-39	+8.867E-03	+3.981E-02	+1.112E-02	+0.000E-39	+0.000E-39
1	+6.848E-03	+8.510E+00	+4.193E-02	+8.611E+00	-24.00	+3.598E-03	+0.000E-39	+8.352E-03	+3.975E-02	+1.121E-02	+0.000E-39	+0.000E-39
1	+1.713E-03	+8.569E+00	+1.376E-02	+8.677E+00	-27.00	+3.598E-03	+0.000E-39	+8.356E-03	+3.969E-02	+1.129E-02	+0.000E-39	+0.000E-39
1	+0.000E-39	+8.627E+00	+1.747E-02	+8.742E+00	-30.00	+3.598E-03	+0.000E-39	+8.359E-03	+3.963E-02	+1.138E-02	+0.000E-39	+0.000E-39

IST	X ST	Y ST	S ST	DTDS ST	THET ST	SECT	ALPHA
39	+4.35326E+00	+7.42500E+00	+8.82062E+00	-6.66667E+00	-6.00000E+01	8	+150.00

IW SN	XOW SN	YOW SN	XBW SN	YBW SN	SBW SN	THET SN	SECT	ALPHA
45	+4.37107E+00	+7.37605E+00	+7.38690E+00	+1.28291E+01	+1.49191E+01	+4.89372E+01	9	+150.00

IL SN	XOL SN	YOL SN	XBL SN	YBL SN	SBL SN	THET SN	SECT	ALPHA
7	+4.28436E+00	+7.48703E+00	+3.59015E-02	+9.85330E-02	+1.07532E-01	+4.89372E+01	8	+150.00

AT ALPHA = +1.5000E+02 WINDWARD, RW = +3.1389E+01 DELS = +1.8342E-02 3S4DOK = -3.1534E+00
SIN(THETAW) NEG. FOR XB = +7.3869E+00 RW = +3.1389E+01 DELS = +1.8342E-02 3S4DOK = -3.1534E+00

SEC	XO W	XB W	YB W	SB W	THETBW	PE/PS W	DP/DS W	QL W	QT W	PE W	QR W	XSI W
8	+4.353E+00	-0.000E-39	+0.000E-39	+0.000E-39	+90.00	+1.000E+00	+4.008E-35	+3.032E+00	+0.000E-39	+0.000E-39	+2.018E-01	+1.834E-02
8	+4.358E+00	+3.654E-04	+1.046E-02	+1.047E-02	+84.00	+9.951E-01	-5.513E+31	+2.987E+00	+7.613E-01	+3.077E-05	+1.987E-01	+1.875E-02
8	+4.366E+00	+3.278E-03	+3.119E-02	+3.142E-02	+78.00	+9.568E-01	-1.903E+32	+2.872E+00	+1.429E+00	+2.591E-04	+6.123E-02	+2.208E-02
9	+4.371E+00	+9.046E-03	+5.130E-02	+5.236E-02	+70.00	+8.830E-01	+0.000E-39	+2.650E+00	+1.859E+00	+7.203E-04	+4.013E-02	+2.908E-02
9	+4.435E+00	+1.350E-01	+3.973E-01	+4.206E-01	+70.00	+8.830E-01	+0.000E-39	+5.355E-01	+1.225E+00	+5.785E-03	+1.371E-01	+1.597E-01
9	+4.499E+00	+2.609E-01	+7.443E-01	+7.888E-01	+70.00	+8.830E-01	+0.000E-39	+4.941E-01	+1.081E+00	+1.785E-02	+9.467E-02	+2.852E-01
9	+4.563E+00	+3.868E-01	+1.089E+00	+1.157E+00	+70.00	+8.830E-01	+0.000E-39	+4.053E-01	+1.001E+00	+1.592E-02	+0.000E-39	+4.056E-01
9	+4.627E+00	+5.178E-01	+1.435E+00	+1.525E+00	+70.00	+8.830E-01	+0.000E-39	+3.525E-01	+9.471E-01	+2.298E-02	+0.000E-39	+5.210E-01
9	+4.691E+00	+6.387E-01	+1.781E+00	+1.893E+00	+70.00	+8.830E-01	+0.000E-39	+3.159E-01	+9.070E-01	+2.505E-02	+0.000E-39	+6.314E-01
9	+4.755E+00	+7.646E-01	+2.127E+00	+2.262E+00	+70.00	+8.830E-01	+0.000E-39	+2.888E-01	+8.758E-01	+3.111E-02	+0.000E-39	+7.368E-01
9	+4.819E+00	+8.906E-01	+2.473E+00	+2.630E+00	+70.00	+8.830E-01	+0.000E-39	+2.675E-01	+8.433E-01	+3.518E-02	+0.000E-39	+8.373E-01
9	+4.883E+00	+1.016E+00	+2.819E+00	+2.999E+00	+70.00	+8.830E-01	+0.000E-39	+2.505E-01	+8.274E-01	+4.124E-02	+0.000E-39	+9.330E-01
9	+4.947E+00	+1.142E+00	+3.165E+00	+3.366E+00	+70.00	+8.830E-01	+0.000E-39	+2.363E-01	+8.084E-01	+4.531E-02	+0.000E-39	+1.024E+00
10	+5.010E+00	+1.268E+00	+3.511E+00	+3.734E+00	+60.00	+7.500E-01	+0.000E-39	+2.858E-01	+9.744E-01	+5.894E-02	+0.000E-39	+1.173E+00
10	+5.010E+00	+1.456E+00	+3.836E+00	+4.109E+00	+60.00	+7.500E-01	+0.000E-39	+2.791E-01	+9.559E-01	+7.587E-02	+0.000E-39	+1.324E+00
10	+5.010E+00	+1.643E+00	+4.161E+00	+4.484E+00	+60.00	+7.500E-01	+0.000E-39	+2.551E-01	+9.393E-01	+8.279E-02	+0.000E-39	+1.469E+00
10	+5.010E+00	+1.831E+00	+4.486E+00	+4.859E+00	+60.00	+7.500E-01	+0.000E-39	+2.430E-01	+9.244E-01	+8.971E-02	+0.000E-39	+1.609E+00
10	+5.010E+00	+2.018E+00	+4.810E+00	+5.234E+00	+60.00	+7.500E-01	+0.000E-39	+2.325E-01	+9.127E-01	+9.656E-02	+0.000E-39	+1.742E+00
10	+5.010E+00	+2.206E+00	+5.135E+00	+5.609E+00	+60.00	+7.500E-01	+0.000E-39	+2.232E-01	+8.982E-01	+1.034E-01	+0.000E-39	+1.869E+00
10	+5.010E+00	+2.393E+00	+5.460E+00	+5.984E+00	+60.00	+7.500E-01	+0.000E-39	+2.150E-01	+8.857E-01	+1.105E-01	+0.000E-39	+1.991E+00
10	+5.010E+00	+2.581E+00	+5.785E+00	+6.359E+00	+60.00	+7.500E-01	+0.000E-39	+2.078E-01	+8.759E-01	+1.174E-01	+0.000E-39	+2.105E+00
10	+5.010E+00	+2.768E+00	+6.109E+00	+6.734E+00	+60.00	+7.500E-01	+0.000E-39	+2.009E-01	+8.660E-01	+1.243E-01	+0.000E-39	+2.216E+00
10	+5.010E+00	+2.956E+00	+6.434E+00	+7.109E+00	+60.00	+7.500E-01	+0.000E-39	+1.943E-01	+8.566E-01	+1.313E-01	+0.000E-39	+2.320E+00
10	+5.010E+00	+3.143E+00	+6.759E+00	+7.484E+00	+60.00	+7.500E-01	+0.000E-39	+1.883E-01	+8.479E-01	+1.382E-01	+0.000E-39	+2.417E+00
10	+5.010E+00	+3.331E+00	+7.084E+00	+7.859E+00	+60.00	+7.500E-01	+0.000E-39	+1.834E-01	+8.396E-01	+1.451E-01	+0.000E-39	+2.508E+00
10	+5.010E+00	+3.518E+00	+7.408E+00	+8.234E+00	+60.00	+7.500E-01	+0.000E-39	+1.795E-01	+8.318E-01	+1.520E-01	+0.000E-39	+2.593E+00
10	+5.010E+00	+3.706E+00	+7.733E+00	+8.609E+00	+60.00	+7.500E-01	+0.000E-39	+1.751E-01	+8.245E-01	+1.589E-01	+0.000E-39	+2.672E+00
10	+5.010E+00	+3.893E+00	+8.058E+00	+8.984E+00	+60.00	+7.500E-01	+0.000E-39	+1.711E-01	+8.175E-01	+1.659E-01	+0.000E-39	+2.745E+00
10	+5.010E+00	+4.081E+00	+8.383E+00	+9.359E+00	+60.00	+7.500E-01	+0.000E-39	+1.673E-01	+8.108E-01	+1.728E-01	+0.000E-39	+2.812E+00
10	+5.010E+00	+4.268E+00	+8.707E+00	+9.734E+00	+60.00	+7.500E-01	+0.000E-39	+1.637E-01	+8.045E-01	+1.797E-01	+0.000E-39	+2.870E+00
10	+5.010E+00	+4.456E+00	+9.032E+00	+1.011E+01	+60.00	+7.500E-01	+0.000E-39	+1.604E-01	+7.984E-01	+1.866E-01	+0.000E-39	+2.922E+00
10	+5.010E+00	+4.643E+00	+9.357E+00	+1.048E+01	+60.00	+7.500E-01	+0.000E-39	+1.573E-01	+7.926E-01	+1.936E-01	+0.000E-39	+2.967E+00
10	+5.010E+00	+4.831E+00	+9.682E+00	+1.086E+01	+60.00	+7.500E-01	+0.000E-39	+1.543E-01	+7.870E-01	+2.005E-01	+0.000E-39	+3.006E+00
10	+5.010E+00	+5.018E+00	+1.001E+01	+1.123E+01	+60.00	+7.500E-01	+0.000E-39	+1.515E-01	+7.817E-01	+2.074E-01	+0.000E-39	+3.037E+00
9	+4.947E+00	+5.255E+00	+1.029E+01	+1.162E+01	+51.30	+5.868E-01	+0.000E-39	+1.571E-01	+8.201E-01	+2.416E-01	+0.000E-39	+3.193E+00
9	+4.883E+00	+5.492E+00	+1.057E+01	+1.197E+01	+50.00	+5.868E-01	+0.000E-39	+1.543E-01	+8.150E-01	+2.493E-01	+0.000E-39	+3.262E+00
9	+4.819E+00	+5.728E+00	+1.085E+01	+1.234E+01	+50.00	+5.868E-01	+0.000E-39	+1.517E-01	+8.101E-01	+2.569E-01	+0.000E-39	+3.322E+00
9	+4.755E+00	+5.965E+00	+1.113E+01	+1.271E+01	+50.00	+5.868E-01	+0.000E-39	+1.492E-01	+8.054E-01	+2.646E-01	+0.000E-39	+3.373E+00
9	+4.691E+00	+6.202E+00	+1.142E+01	+1.308E+01	+50.00	+5.868E-01	+0.000E-39	+1.469E-01	+8.008E-01	+2.723E-01	+0.000E-39	+3.415E+00
9	+4.627E+00	+6.438E+00	+1.170E+01	+1.344E+01	+50.00	+5.868E-01	+0.000E-39	+1.449E-01	+7.963E-01	+2.799E-01	+0.000E-39	+3.448E+00
9	+4.563E+00	+6.675E+00	+1.198E+01	+1.381E+01	+50.00	+5.868E-01	+0.000E-39	+1.424E-01	+7.920E-01	+2.876E-01	+0.000E-39	+3.470E+00
9	+4.499E+00	+6.912E+00	+1.226E+01	+1.418E+01	+50.00	+5.868E-01	+0.000E-39	+1.404E-01	+7.879E-01	+2.953E-01	+0.000E-39	+3.483E+00
9	+4.435E+00	+7.148E+00	+1.254E+01	+1.455E+01	+50.00	+5.868E-01	+0.000E-39	+1.384E-01	+7.839E-01	+3.029E-01	+0.000E-39	+3.484E+00
9	+4.371E+00	+7.385E+00	+1.283E+01	+1.492E+01	+50.00	+5.868E-01	+0.000E-39	+1.365E-01	+7.799E-01	+3.106E-01	+0.000E-39	+3.474E+00
9	+4.371E+00	+7.387E+00	+1.283E+01	+1.492E+01	+48.94	+5.685E-01	-4.633E+32	+3.445E-01	+7.786E-01	+3.121E-01	+0.000E-39	+3.471E+00
8	+4.366E+00	+7.400E+00	+1.284E+01	+1.494E+01	+42.30	+4.497E-01	-4.552E+32	+3.003E-01	+7.441E-01	+3.196E-01	+0.000E-39	+3.475E+00
8	+4.358E+00	+7.416E+00	+1.285E+01	+1.496E+01	+34.00	+3.152E-01	-4.337E+32	+2.475E-01	+6.520E-01	+2.945E-01	+0.000E-39	+3.523E+00
8	+4.353E+00	+7.425E+00	+1.286E+01	+1.497E+01	+30.00	+2.669E-01	-3.022E+32	+2.175E-01	+6.036E-01	+2.687E-01	+0.000E-39	+3.565E+00
8	+4.348E+00	+7.434E+00	+1.287E+01	+1.498E+01	+24.00	+2.252E-01	-2.631E+32	+1.941E-01	+5.542E-01	+2.503E-01	+0.000E-39	+3.618E+00
8	+4.335E+00	+7.454E+00	+1.287E+01	+1.500E+01	+18.70	+1.877E-01	-1.945E+32	+1.733E-01	+4.951E-01	+2.118E-01	+0.000E-39	+3.760E+00
8	+4.320E+00	+7.474E+00	+1.288E+01	+1.502E+01	+10.00	+1.048E-01	-1.432E+32	+1.127E-01	+3.445E-01	+1.738E-01	+0.000E-39	+3.951E+00
8	+4.303E+00	+7.495E+00	+1.288E+01	+1.504E+01	+2.30	+7.197E-02	-1.029E+32	+3.532E-02	+2.928E-01	+1.383E-01	+0.000E-39	+4.191E+00
8	+4.284E+00	+7.516E+00	+1.288E+01	+1.506E+01	-6.00	+4.584E-02	-7.084E+31	+5.134E-02	+2.109E-01	+1.057E-01	+0.000E-39	+4.478E+00
8	+4.265E+00	+7.536E+00	+1.288E+01	+1.508E+01	-14.70	+2.859E-02	-4.752E+31	+4.472E-02	+1.533E-01	+7.967E-02	+0.000E-39	+4.806E+00
8	+4.244E+00	+7.556E+00	+1.287E+01	+1.510E+01	-22.70	+1.696E-02	-3.305E+31	+3.127E-02	+1.072E-01	+5.639E-02	+0.000E-39	+5.165E+00

8	+4.223E+00	+7.575E+00	+1.286E+01	+1.513E+01	-30.00	+9.707E-03	-1.894E+01	+2.147E-02	+7.243E-02	+3.889E-02	+0.000E-39	+5.543E+00
4	+4.208E+00	+7.588E+00	+1.285E+01	+1.514E+01	-36.00	+6.248E-03	-1.293E+01	+1.531E-02	+5.289E-02	+2.885E-02	+0.000E-39	+0.000E-39
4	+4.192E+00	+7.600E+00	+1.284E+01	+1.516E+01	-42.00	+3.905E-03	-8.575E+00	+1.243E-02	+3.758E-02	+2.089E-02	+0.000E-39	+0.000E-39
4	+4.177E+00	+7.611E+00	+1.283E+01	+1.517E+01	-48.00	+3.598E-03	+0.000E-39	+2.257E-03	+3.549E-02	+1.975E-02	+0.000E-39	+0.000E-39
4	+4.162E+00	+7.621E+00	+1.282E+01	+1.519E+01	-54.00	+3.598E-03	+0.000E-39	+2.267E-03	+3.549E-02	+1.977E-02	+0.000E-39	+0.000E-39
4	+4.148E+00	+7.630E+00	+1.281E+01	+1.520E+01	-60.00	+3.598E-03	+0.000E-39	+2.267E-03	+3.548E-02	+1.979E-02	+0.000E-39	+0.000E-39
4	+4.135E+00	+7.637E+00	+1.279E+01	+1.522E+01	-66.00	+3.598E-03	+0.000E-39	+2.267E-03	+3.547E-02	+1.981E-02	+0.000E-39	+0.000E-39
4	+4.123E+00	+7.643E+00	+1.278E+01	+1.524E+01	-72.00	+3.598E-03	+0.000E-39	+2.267E-03	+3.546E-02	+1.983E-02	+0.000E-39	+0.000E-39
4	+4.112E+00	+7.647E+00	+1.276E+01	+1.525E+01	-78.00	+3.598E-03	+0.000E-39	+2.267E-03	+3.546E-02	+1.985E-02	+0.000E-39	+0.000E-39
4	+4.102E+00	+7.649E+00	+1.275E+01	+1.527E+01	-84.00	+3.598E-03	+0.000E-39	+2.267E-03	+3.545E-02	+1.987E-02	+0.000E-39	+0.000E-39
4	+4.093E+00	+7.650E+00	+1.273E+01	+1.528E+01	-90.00	+3.598E-03	+0.000E-39	+2.267E-03	+3.544E-02	+1.989E-02	+0.000E-39	+0.000E-39
3	+3.701E+00	+7.650E+00	+1.195E+01	+1.607E+01	-90.00	+3.598E-03	+0.000E-39	+2.256E-03	+3.509E-02	+2.092E-02	+0.000E-39	+0.000E-39
3	+3.308E+00	+7.650E+00	+1.116E+01	+1.585E+01	-90.00	+3.598E-03	+0.000E-39	+2.255E-03	+3.475E-02	+2.194E-02	+0.000E-39	+0.000E-39
3	+2.916E+00	+7.650E+00	+1.037E+01	+1.764E+01	-90.00	+3.598E-03	+0.000E-39	+2.254E-03	+3.444E-02	+2.296E-02	+0.000E-39	+0.000E-39
3	+2.523E+00	+7.650E+00	+9.590E+00	+1.842E+01	-90.00	+3.598E-03	+0.000E-39	+2.252E-03	+3.414E-02	+2.398E-02	+0.000E-39	+0.000E-39
3	+2.130E+00	+7.650E+00	+8.805E+00	+1.921E+01	-90.00	+3.598E-03	+0.000E-39	+2.251E-03	+3.386E-02	+2.500E-02	+0.000E-39	+0.000E-39
3	+1.738E+00	+7.650E+00	+8.019E+00	+1.999E+01	-90.00	+3.598E-03	+0.000E-39	+2.250E-03	+3.359E-02	+2.603E-02	+0.000E-39	+0.000E-39
3	+1.345E+00	+7.650E+00	+7.234E+00	+2.078E+01	-90.00	+3.598E-03	+0.000E-39	+2.253E-03	+3.333E-02	+2.705E-02	+0.000E-39	+0.000E-39
3	+9.527E-01	+7.650E+00	+6.449E+00	+2.156E+01	-90.00	+3.598E-03	+0.000E-39	+2.253E-03	+3.308E-02	+2.807E-02	+0.000E-39	+0.000E-39
3	+5.601E-01	+7.650E+00	+5.664E+00	+2.235E+01	-90.00	+3.598E-03	+0.000E-39	+2.237E-03	+3.285E-02	+2.909E-02	+0.000E-39	+0.000E-39
3	+1.675E-01	+7.650E+00	+4.879E+00	+2.313E+01	-90.00	+3.598E-03	+0.000E-39	+2.255E-03	+3.252E-02	+3.011E-02	+0.000E-39	+0.000E-39
1	+1.362E-01	+7.648E+00	+4.813E+00	+2.320E+01	-93.00	+3.598E-03	+0.000E-39	+2.255E-03	+3.250E-02	+3.020E-02	+0.000E-39	+0.000E-39

AT ALPHA = +1.5000E+02, LEEWARD, RW = +2.7633E-01 DELS = +1.8342E-02 SSDJC = -1.4148E+00
THETAW LESS THAN LIMIT

SEC	XO L	XB L	YB L	SB L	THETBL	PF/PS L	DP/DS	QL L	QT L	RE L	QR L	XSI L
8	+4.353E+00	-0.000E-39	+0.000E-39	+0.000E-39	+90.00	+1.000E+00	+4.008E-05	+3.002E+00	+0.000E-39	+0.000E-39	+2.018E-01	+1.834E-02
8	+4.348E+00	+3.654E-04	+1.046E-02	+1.047E-02	+86.30	+9.951E-01	-6.510E+01	+2.987E+00	+8.838E-01	+3.708E-05	+1.595E-01	+1.859E-02
8	+4.335E+00	+3.278E-03	+3.119E-02	+3.142E-02	+78.00	+9.568E-01	-1.903E+02	+2.872E+00	+1.659E+00	+3.243E-04	+2.688E-02	+1.978E-02
8	+4.320E+00	+9.046E-03	+5.130E-02	+5.236E-02	+70.00	+8.830E-01	-3.507E+02	+2.655E+00	+1.859E+00	+7.204E-04	+0.000E-39	+2.234E-02
8	+4.303E+00	+1.756E-02	+7.042E-02	+7.330E-02	+62.00	+7.796E-01	-3.878E+02	+2.302E+00	+2.081E+00	+1.297E-03	+0.000E-39	+2.617E-02
8	+4.284E+00	+2.865E-02	+8.817E-02	+9.425E-02	+54.00	+6.545E-01	-4.449E+02	+2.051E+00	+2.134E+00	+1.903E-03	+0.000E-39	+3.121E-02
8	+4.284E+00	+3.690E-02	+9.853E-02	+1.075E-01	+48.94	+5.685E-01	-4.633E+02	+1.353E+00	+2.088E+00	+2.249E-03	+0.000E-39	+3.500E-02
8	+4.265E+00	+4.210E-02	+1.042E-01	+1.152E-01	+46.00	+5.192E-01	-4.675E+02	+1.748E+00	+2.036E+00	+2.422E-03	+0.000E-39	+3.739E-02
8	+4.244E+00	+5.765E-02	+1.182E-01	+1.351E-01	+38.00	+3.813E-01	-4.539E+02	+1.386E+00	+1.803E+00	+2.739E-03	+0.000E-39	+4.455E-02
8	+4.223E+00	+7.500E-02	+1.299E-01	+1.571E-01	+30.00	+2.735E-01	-3.056E+02	+1.053E+00	+1.519E+00	+2.839E-03	+0.000E-39	+5.241E-02
4	+4.208E+00	+8.899E-02	+1.370E-01	+1.728E-01	+24.00	+2.121E-01	-2.475E+02	+8.555E-01	+1.311E+00	+2.809E-03	+0.000E-39	+5.853E-02
4	+4.192E+00	+1.036E-01	+1.427E-01	+1.885E-01	+18.00	+1.617E-01	-1.985E+02	+5.324E-01	+1.110E+00	+2.695E-03	+0.000E-39	+6.461E-02
4	+4.177E+00	+1.188E-01	+1.467E-01	+2.042E-01	+12.00	+1.223E-01	-1.534E+02	+5.401E-01	+9.284E-01	+2.528E-03	+0.000E-39	+7.040E-02
4	+4.162E+00	+1.343E-01	+1.492E-01	+2.199E-01	+6.00	+9.031E-02	-1.238E+02	+4.183E-01	+7.599E-01	+2.304E-03	+0.000E-39	+7.564E-02
4	+4.148E+00	+1.500E-01	+1.500E-01	+2.355E-01	-0.00	+6.625E-02	-9.609E+01	+3.222E-01	+6.160E-01	+2.064E-03	+0.000E-39	+8.009E-02
4	+4.135E+00	+1.657E-01	+1.492E-01	+2.513E-01	-6.00	+4.700E-02	-7.233E+01	+2.407E-01	+4.862E-01	+1.791E-03	+0.000E-39	+8.358E-02
4	+4.123E+00	+1.812E-01	+1.467E-01	+2.673E-01	-12.00	+3.312E-02	-5.397E+01	+1.793E-01	+3.802E-01	+1.532E-03	+0.000E-39	+0.000E-39
4	+4.112E+00	+1.964E-01	+1.427E-01	+2.827E-01	-18.30	+2.265E-02	-3.916E+01	+1.296E-01	+2.902E-01	+1.273E-03	+0.000E-39	+0.000E-39
4	+4.102E+00	+2.110E-01	+1.370E-01	+2.985E-01	-24.00	+1.527E-02	-2.797E+01	+9.274E-02	+2.184E-01	+1.039E-03	+0.000E-39	+0.000E-39
4	+4.093E+00	+2.250E-01	+1.299E-01	+3.142E-01	-30.00	+1.003E-02	-1.999E+01	+6.498E-02	+1.609E-01	+8.259E-04	+0.000E-39	+0.000E-39
3	+3.701E+00	+9.050E-01	+2.627E-01	+1.099E+00	-30.00	+1.003E-02	+0.000E-39	+4.499E-02	+1.252E-01	+2.890E-03	+0.000E-39	+0.000E-39

```
2334 LINES OUTPUT.
$IBSYS
$PAUSE
OPER. ACTION PAUSE
..CONTINUING
$PAUSE
OPER. ACTION PAUSE
..CONTINUING
$IBSYS
0000000000000000000800001I-0101G00000080001F000000IBSYST-00001000002753400000000 )
1 LINES OUTPUT THIS JOB.
```

III. COMPUTATIONS

A. BLOCK DIAGRAM

The block diagram for Program 1885 is shown in Figure 11. The overall program is divided into five basic calculations:

1. The body geometry routine, depicted in Figure 11a, computes the body coordinates at zero angle-of attack, locates the stagnation point at angle of attack, defines the wind axes, and thereafter computes the body coordinates in the transformed axis system. The array of body coordinates so generated is thereafter utilized to compute the pressure and heating distributions.

2. The pressure distribution routine, depicted in Figure 11b, computes the pressures utilizing several calculation models by testing the local slope, curvature, and previous pressure value. The local slope and curvature are given in the coordinate tables.

3. The laminar and turbulent heating routine, depicted in Figure 11c, utilizes the pressure distributions, surface distance information from the coordinate tables, and thermochemical data from the oblique and normal shock routine to evaluate the appropriate heat-transfer relationships.

4. The oblique and normal shock routine, depicted in Figure 11d, evaluates all the necessary flow conditions behind oblique waves assuming equilibrium thermodynamics.

5. The radiation heating routine, depicted in Figure 11e, requires that the shock layer thickness be defined everywhere and that the radiation intensities be determined at the body and at the shock.

B. SYMBOLS

		Units
a	exponent on Lewis Number in stagnation point heating equation	--
C_p	specific heat at constant pressure	$ft^2/sec^2 - {}^oK$
h_D	dissociation enthalpy	ft^2/sec^2
h_w	static enthalpy behind oblique wave	ft^2/sec^2
H	stagnation enthalpy	ft^2/sec^2

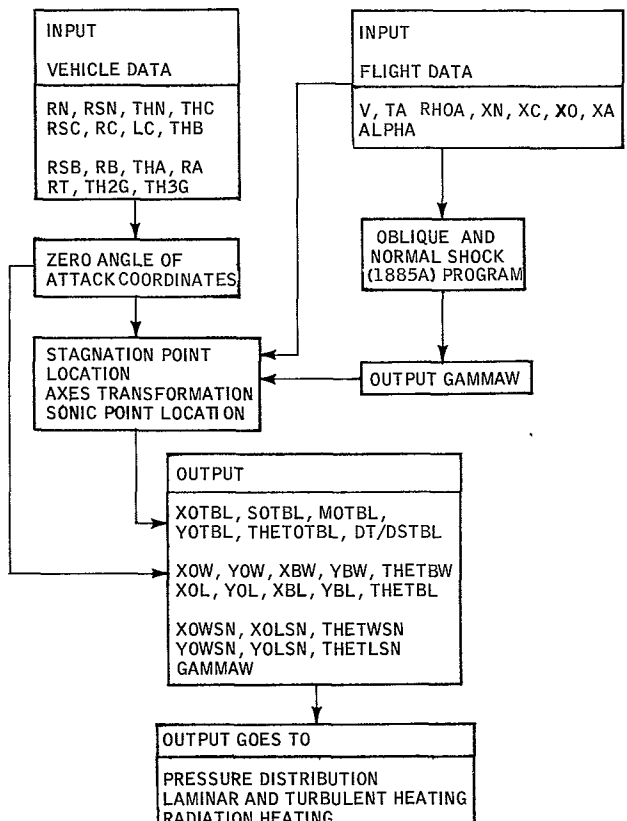

85-0259

Figure 11a BLOCK DIAGRAM FOR PROGRAM 1885 -- BODY GEOMETRY ROUTINE

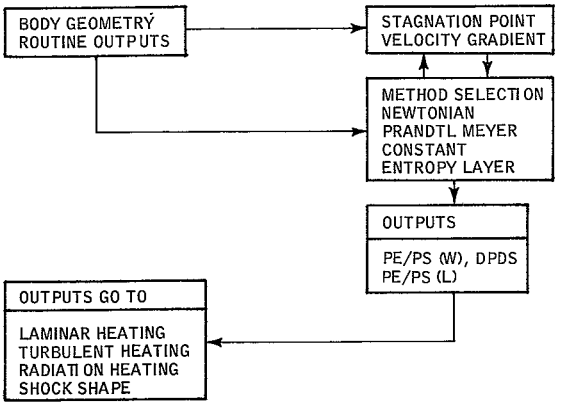

Figure 11b

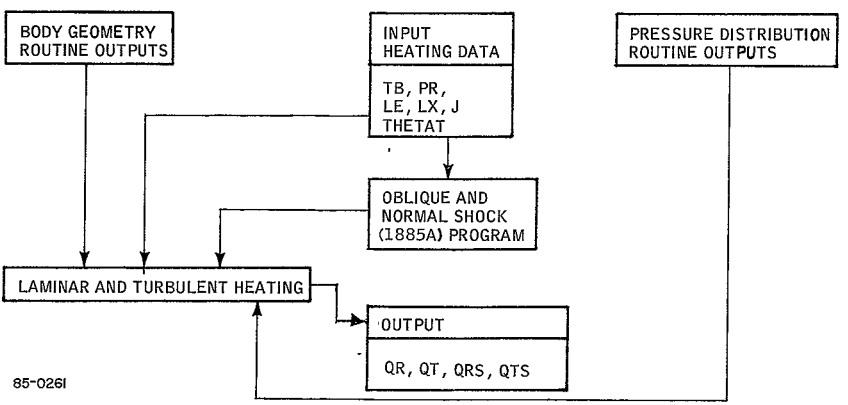

Figure 11c

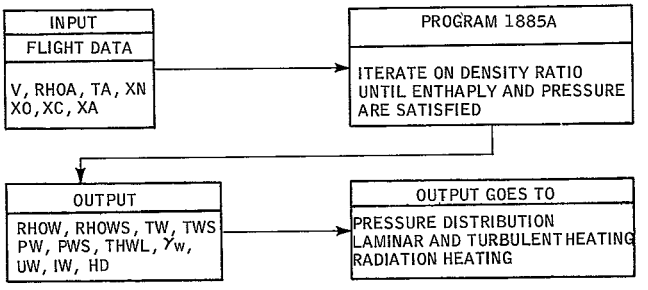

Figure 11d

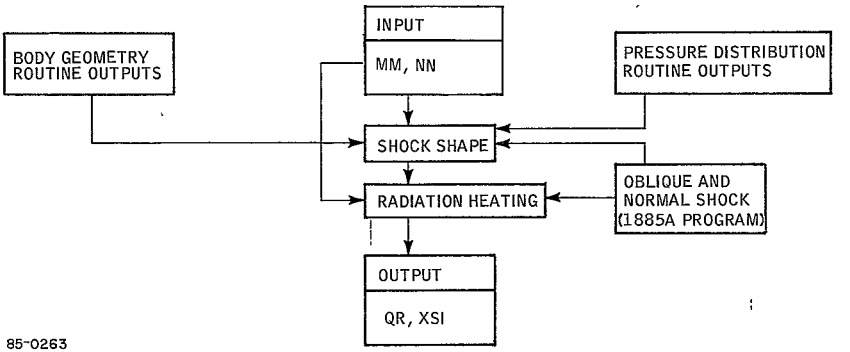

Figure 11e

I_b	radiation intensity at edge of boundary layer	Btu/ft^3 - sec
I_w	radiation intensity behind oblique shock	Btu/ft^3 - sec
J	index for body shape; J = 1 is axisymmetric; 0 is two dimensional	--
L	Lewis Number	--
LC	cylinder length	feet
M	mean molecular weight of atmosphere	--
m	polynomial exponent for radiation profile	--
M_a	flight Mach number	--
n	polynomial exponent for mass flow profile	--
P_a	ambient pressure	lb/ft^2
P_e	pressure at edge of boundary layer	lb/ft^2
P_o	reference pressure; P_o = 2116.2	lb/ft^2
P_w	pressure behind oblique shock	lb/ft^2
P_{ws}	stagnation pressure behind oblique shock	lb/ft^2
P_s	stagnation pressure behind normal shock	lb/ft^2
P_e^*	sonic point pressure	lb/ft^2
P_T	stagnation pressure at edge of boundary layer	lb/ft^2
q_L	laminar heat rate	Btu/ft^2 - sec
q_{LS}	stagnation point heat rate	Btu/ft^2 - sec
q_T	turbulent heat rate	Btu/ft^2 - sec
q_R	radiative heating rate	Btu/ft^2-sec

R	universal gas constant; R = 89500	$ft^2/sec^2\text{-}^oK$
RA	radius of rear spherical cap	feet
RB	radius of flare	feet
RC	radius of cylinder; reference radius	feet
RN	radius of nose cap	feet
RSB	toroidal radius at flare base	feet
RSC	toroidal radius of fore cone base	feet
RSN	toroidal radius following nose cap	feet
RT	base radius of truncated after body	feet
S_o	surface distance in zero angle-of-attack coordinates measured from stagnation point	feet
S_b	surface distance in wind coordinates measured from stagnation point	feet
S_{os}	surface distance from zero angle-of-attack stagnation point to stagnation point at angle of attack	feet
S_b^*	surface distance to sonic point	feet
T_a	ambient atmospheric temperature	^oK
T_b	body surface temperature	^oK
T_e	temperature at edge of boundary layer	^oK
T_o	reference temperature; $T_o = 273.16$	^oK
T_w	temperature behind oblique shock	^oK
T_{ws}	stagnation temperature behind oblique shock	^oK
T_s	stagnation temperature behind normal shock	^oK

T_T	stagnation temperature at edge of boundary layer	^oK
U_e	velocity at edge of boundary layer	ft/sec
U_w	velocity behind normal shock	ft/sec
V	flight velocity	ft/sec
x_o, y_o	body coordinates at zero angle of attack	feet
x_b, y_b	body coordinates in wind axes	feet
x_b^*, y_b^*	sonic point coordinates in wind axes	feet
x_{os}, y_{os}	angle-of-attack stagnation point coordinates measured in zero angle of attack coordinates	feet
Z	compressibility factor; number moles per initial mole	--
α	angle of attack	degrees
β	pressure gradient parameter	--
γ_a	ratio of specific heats for ambient atmosphere	--
γ_w	adiabatic exponent behind oblique shock	
γ_s	adiabatic exponent behind normal shock	
γ_e	adiabatic exponent at edge of boundary layer	
ρ_a	ambient density of atmosphere	$slug/ft^3$
ρ_w	density behind oblique shock	$slug/ft^3$
ρ_e	density at edge of boundary layer	$slug/ft^3$
ρ_{ws}	stagnation density behind oblique shock	$slug/ft^3$
ρ_s	stagnation density behind normal shock	$slug/ft^3$
ρ_b	density at body surface	$slug/ft^3$
ρ_{bs}	density at body surface at stagnation point	$slug/ft^3$

ρ_T	stagnation density at edge of boundary layer	slug/ft^3
θ_b	angle corresponding to local body slope	degrees
θ_w	oblique shock angle	degrees
θ_{wL}	flow deflection angle behind oblique shock	degrees
μ_b	viscosity evaluated at (T_b)	lb-sec/ft^2
μ_e	viscosity evaluated at (T_e)	lb-sec/ft^2
μ_s	viscosity evaluated at (T_s)	lb-sec/ft^2
ξ	coordinate normal to body surface	feet
ξ_w	shock standoff distance normal to body	feet
σ	Prandtl Number	--

C. EQUATIONS

The equations for generating each section of the shape are summarized below:

1. Shape Generation Equations

Section 1. (Nosecap)

Coordinates	Formula	Independent Variable Limits
x_o	$x_o = 0$	$\theta_o = 90,\ \theta_1 = \theta_N$
$x_o \rightarrow x_1$	$x = R_N(1 - \sin\theta)$	$\theta_1 \leq \theta \leq \theta_o$
x_1	$x_1 = R_N(1 - \sin\theta_N)$	(1)
y_o	$y_o = 0$	
$y_o \rightarrow y_1$	$y = R_N \cos\theta$	
y_1	$y_1 = R_N \cos\theta_N$	

Section 2.(Torus) Ind. Var (θ)

$x_1 \rightarrow x_2$ $\quad x = x_1 + R_{SN}(\sin\theta_N - \sin\theta),\ \theta_1 = \theta_N$

x_2 $\quad x_2 = x_1 + R_{SN}(\sin\theta_N - \sin\theta_2)$ (2)

$\theta_2 \le \theta \le \theta_N$

$y_1 \rightarrow y_2$ $\quad y = y_1 + R_{SN}(\cos\theta - \cos\theta_N),\ \theta_2 = \theta_c$ cone

y_2 $\quad y_2 = y_1 + R_{SN}(\cos\theta_2 - \cos\theta_N),\ \theta_2 = \beta$ tension shell

$\rightarrow$ $\quad \theta_2 = \theta_{2G}$ general shell

Section 3. (Cone)

Cone: Input $\theta_c = \theta_2$

$x_2 \rightarrow x_3$ $\quad x = x_2 + (y - y_2)\cot\theta_2$

x_3 $\quad x_3 = x_2 + (y_3 - y_2)\cot\theta_2$ (3)

$y_2 \rightarrow y_3$ $\quad y = y \qquad y_2 \le y \le y_3$

y_3 $\quad y_3 = R_c - R_{sc}(1 - \cos\theta_2)$

Section 3.
Tension Shell:

$$y = \left\{ y_3^2 + (y_2^2 - y_3^2) \frac{\ln\left(\frac{1+\cos\theta}{\sin\theta}\right)}{\ln\left(\frac{1+\cos\beta}{\sin\beta}\right)} \right\}^{1/2} \qquad \beta \le \theta \le 90 \tag{4}$$

$$x - x_2 = \int_{y_2}^{y} \cot\theta\, dy \qquad y_2 \le y \le y_3$$

$$\frac{dS}{d\theta} = \frac{-\left(y_2^2 - y_3^2\right)}{2y(\sin^2\theta)\ \ln\left(\frac{1+\cos\beta}{\sin\beta}\right)} \qquad y_3 = R_c - R_{sc}$$

500

Section 3. , General Shape: Input Coordinates

Table of x
Table of y
} 25 points

First pair of coordinates are x_2 , y_2 (5)

Last pair of coordinates are x_3 , y_3

Also, θ_{2G} , θ_{3G} .

$$y_3 = R_c - R_{sc}\,(1 - \cos\,\theta_{3G})$$

$$y_2 = y_1 + R_{SN}\,(\cos\,\theta_{2G} - \cos\,\theta_N)$$

Section 4. (Torus)

Coordinates	Formula	Independent Variable Limits	
$x_3 \rightarrow x_4$	$x = x_3 + R_{sc}\,(\sin\,\theta_3 - \sin\,\theta)$		
x_4	$x_4 = x_3 + R_{sc}\,\sin\,\theta_3$	$0 \leq \theta \leq \theta_3$	(6)
$y_3 \rightarrow y_4$	$y = y_3 + R_{sc}\,(\cos\,\theta - \cos\,\theta_3)$	$\theta_3 = \theta_c$, cone	
y_4	$y_4 = R_c$	$\theta_3 = 90$, tension shell	
		$\theta_3 = \theta_{3G}$, Gen. Shell	

Section 5. (Cylinder)

	Ind. Var. (X)		
$x_4 \rightarrow x_5$	$x = x$	$x_4 \leq x \leq x_4 + \Delta x$	
x_5	$x_5 = x_4 + \Delta x$	$\Delta x \leq L_c$	(7)
$y_4 \rightarrow y_5$	$y = R_c$		

Section 6. (Flare) Ind. Var. (y)

$x_5 \rightarrow x_6$	$x = x_5 + (y - R_c)\,\cot\,\theta_B$		
x_6	$x_6 = x_5 + (y_6 - R_c)\,\cot\,\theta_B$		
$y_5 \rightarrow y_6$	$y = y$	$y_5 \leq y \leq y_6$	(8)
y_6	$y_6 = R_B - R_{SB}\,(1 - \cos\,\theta_B)$		

501<

Section 7. (Torus)

$x_6 \rightarrow x_7$	$x = x_6 + R_{SB}(\sin\theta_B - \sin\theta)$		
x_7	$x_7 = x_6 + R_{SB}\sin\theta_B$	$0 \le \theta \le \theta_B$	(9)
$y_6 \rightarrow y_7$	$y = y_6 + R_{SB}(\cos\theta - \cos\theta_B)$		
y_7	$y_7 = R_B$		

Section 8. (Torus)

$x_7 \rightarrow x_8$	$x = x_7 - R_{SB}\sin\theta$		(10)
x_8	$x_8 = x_7 - R_{SB}\sin\theta_A$	$\theta_A \le \theta \le 0$	
$y_7 \rightarrow y_8$	$y = y_7 - R_{SB}(1-\cos\theta)$		
y_8	$y_8 = y_7 - R_{SB}(1-\cos\theta_A)$		

Section 9. (Aft Cone)

$x_8 \rightarrow x_9$	$x = x_8 + (y - y_8)\cot\theta_A$		
x_9	$x_9 = x_8 + (y_9 - y_8)\cot\theta_A$	$y_9 \le y \le y_8$	(11)
$y_8 \rightarrow y_9$	$y = y$		
y_9	$y_9 = R_A\cos\theta_A$, or $y_9 = R_T$ (optional)		

Section 10. (Aft Cap)

$x_9 \rightarrow x_{10}$	$x = x_9 + R_A(\sin\theta_A - \sin\theta)$		
x_{10}	$x_{10} = x_9 + R_A(\sin\theta_A + 1)$	$-90 \le \theta \le \theta_A$	(12)
$y_9 \rightarrow y_{10}$	$y = R_A\cos\theta$		
y_{10}	$y_{10} = 0$		

Section 10. (Truncated Base)

$x = x_9$		
$y = y$	$0 \le y \le R_T$	
$y_{10} = 0$		
$y_9 = R_T$		

502<

2. Surface Distance Equations

Section 1.

	Formula	Limits	
S_o	$S_o = 0$		
$S_o \rightarrow S_1$	$S = R_N \frac{(90 - \theta_N)}{57.3}$	$\theta_N \leq \theta \leq 90$	(13)
S_1	$S_1 = R_N \frac{(90 - \theta_N)}{57.3}$		

Section 2.

$S_1 \rightarrow S_2$	$S = S_1 + R_{SN} \frac{(\theta_N - \theta)}{57.3}$	$\theta_2 \leq \theta \leq \theta_1$	(14)
S_2	$S_2 = S_1 + R_{SN} (\theta_N - \theta_2)/57.3$		

Section 3.

$S_2 \rightarrow S_3$	$S = S_2 + \frac{(x - x_2)}{\cos \theta_2}$	$x_2 \leq x \leq x_3$	(15)
S_3	$S_3 = S_2 + \frac{(x_3 - x_2)}{\cos \theta_2}$	$\theta_2 = \theta_c$	

$$S = S_2 + \int_{y_2}^{y_3} \frac{dy}{\sin \theta} \qquad (16)$$

Section 4.

$S_3 \rightarrow S_4$	$S = S_3 + R_{SC} (\theta_3 - \theta)/57.3$	$0 \leq \theta \leq \theta_3$	(17)

Section 5.

$S_4 \rightarrow S_5$	$S = S_4 + (x - x_4)$	$x_4 \leq x \leq x_5$	(18)

Section 6.

$S_5 \rightarrow S_6$ $\quad S = S_5 + (x - x_5)/\cos\theta_B \quad x_5 \leq x \leq x_6$ (19)

Section 7.

$S_6 \rightarrow S_7$ $\quad S = S_6 + R_{SB}\,\dfrac{(\theta_B - \theta)}{57.3} \quad 0 < \theta < \theta_6$ (20)

Section 8.

$S_7 \rightarrow S_8$ $\quad S = S_7 - R_{SB}(\theta/57.3) \quad \theta_A \leq \theta \leq 0$ (21)

Section 9.

$S_8 \rightarrow S_9$ $\quad S = S_8 + (y - y_8)/\sin\theta_A \quad y_9 \leq y \leq y_8$ (22)

Section 10.

$S_9 \rightarrow S_{10}$ $\quad S = S_9 + R_{SA}(\theta_A - \theta)/57.3 \quad -90 \leq \theta \leq \theta_9$ (23)

or $\quad S = S_9 + (R_T - y) \quad 0 \leq y \leq R_T$

3. Axes Transformation

$$y_b = |(y_o - y_{os})\cos\alpha + (x_o - x_{os})\sin\alpha| \tag{24}$$

$$x_b = (x_o - x_{os})\cos\alpha - (y_o - y_{os})\sin\alpha \tag{25}$$

Body slope and surface distance at angle of attack.

4. Windward Meridian

Proceeding from $x_o = x_{os}$ in direction of increasing (x_o),

$$\theta_b = \theta_o + \alpha$$

$$+y_o \text{ used} \tag{27}$$

$$S_b = S_o - S_{os}$$

When $(x_o)_{max}$ is reached, reverse direction to decreasing (x_o), and use,

$$\theta_b = \alpha - \theta_o - 180$$

$$-y_o \text{ used} \tag{28}$$

$$S_b = 2(S_o)_{max} - S_{os} - S_o$$

5. Leeward Meridian

Proceeding from $x_o = x_{os}$ in direction of decreasing (x_o)

$$\theta_b = 180 - \theta_o - \alpha$$

$+y_o$ used (29)

$$S_b = S_{os} - S_o$$

When $(x_o = 0)$ is reached, reverse direction increasing (x_o), and use,

$$\theta_b = \theta_o - \alpha$$

$-y_o$ used (30)

$$S_b = S_{os} + S_o$$

6. Sonic Point Location

$$\theta_b^* = \sin^{-1}\left[\frac{2}{\gamma_S + 1}\right]^{\frac{\gamma_S}{2(\gamma_S - 1)}} \tag{31}$$

7. Equation and Logic for Stagnation Point Location

Test each section for all possible cases of $\alpha + \theta_o = 90$. Select stagnation point at maximum $\bar{x}_\alpha$,

$$\bar{x}_\alpha = y_{os} \sin\alpha - x_{os} \cos\alpha , \tag{32}$$

8. Oblique Shock Equations

$$M = 28\, X_N + 32\, X_O + 44\, X_C + 40\, X_A \tag{33}$$

$$C_p = (R/M)\,(3.5\, X_N + 3.5\, X_O + 2.5\, X_A) \tag{34}$$

$$H = (V^2/2) + C_p\, T_a \tag{35}$$

$$M_a = \frac{V}{\left[\dfrac{C_p\, T_a}{\dfrac{C_p M}{R} - 1}\right]^{1/2}} \tag{36}$$

$$\gamma_a = \frac{(C_p M/R)}{[(C_p M/R) - 1]} \tag{37}$$

$$\frac{h_w M}{R T_o} = \frac{H M}{R T_o} \left\{ 1 - \frac{V^2}{2H} \left[\left(\frac{\rho_a}{\rho_w} \right)^2 \sin^2 \theta_w + \cos^2 \theta_w \right] \right\} \tag{38}$$

$$\frac{P_w}{P_o} = \frac{\rho_a V^2}{P_o} \sin^2 \theta_w \left(1 - \frac{\rho_a}{\rho_w} \right) + \frac{P_a}{P_o} \tag{39}$$

9. Oblique Shock Solution

$$\rho_w = \frac{P_w M}{Z R T_w} \tag{40}$$

$$\left(\frac{U_w}{V} \right)^2 = \cos^2 \theta_w + \left(\frac{\rho_a}{\rho_w} \right)^2 \sin^2 \theta_w \tag{41}$$

$$\cot \theta_{wl} = \frac{\cos^2 \theta_w + (\rho_a/\rho_w) \sin^2 \theta_w}{\sin \theta_w \cos \theta_w (1 - \rho_a/\rho_w)} \tag{42}$$

$$\gamma_w = \frac{\rho_w/\rho_a + 1}{\rho_w/\rho_a - 1} \tag{43}$$

$$\frac{\rho_{ws}}{\rho_a} = \frac{\rho_w}{\rho_a} \left(\frac{P_{ws}}{P_w} \right)^{\frac{1}{\gamma_w}} \tag{44}$$

$$\frac{P_{ws}}{P_o} = \frac{P_w}{P_o} \left[\frac{1}{1 - \frac{V^2}{2H} \left(\frac{U_w}{V} \right)^2} \right]^{\frac{\gamma_w}{\gamma_w - 1}} \tag{45}$$

Start oblique shock calculation at $\theta_w = 90$ degrees When $I_w \leq$ INSTϕP cease calculation of I_w at smaller θ_w's At this time the value of γ_w is taken as

$\theta_w < \theta_w'$

$$\gamma_w = \gamma_w' + \frac{(\gamma_w' - \gamma_a)}{(\theta_w' - \mu_a)} (\theta_w - \theta_w') \tag{46}$$

where θ_w' is first angle where $I_w \leq$ INSTϕP and γ_w' is corresponding γ_w.

$$\mu_a = \sin^{-1} \frac{1}{M_a} \tag{47}$$

$$\frac{\rho_w}{\rho_a} = \frac{(\gamma_w + 1) M_a^2 \sin^2 \theta_w}{[(\gamma_w - 1) M_a^2 \sin^2 \theta_w + 2]} \tag{48}$$

I_w is taken as zero for $\theta_w < \theta_w'$

Remainder of shock variables via Equations (38), (39), (40), (41), (42), and (44)

10. Equations for Pressure Distribution $0 \leq S_b \leq S_b^*$

$$\frac{P_e^*}{P_s} = \left(\frac{2}{\gamma_s + 1}\right)^{\frac{\gamma_s}{\gamma_s - 1}} \tag{49}$$

$$\frac{P_e}{P_s} = 1 - \frac{\rho_s}{\rho_a} \left(\frac{\rho_a V^2}{2 P_s}\right) \left(\frac{S_b^*}{V} \cdot \frac{du}{ds}\right)^2 \left(\frac{S_b}{S_b^*}\right)^2 + \left[\frac{P_e^*}{P_s} - 1 + \frac{\rho_s}{\rho_a} \left(\frac{\rho_a V^2}{2 P_s}\right) \left(\frac{S_b^*}{V} \frac{du}{ds}\right)^2\right] \left(\frac{S_b}{S_b^*}\right)^4 \tag{50}$$

$$\frac{P_e}{P_s} = \sin^2 \theta_b \tag{51}$$

5027

11. Pressure Distribution $S_b > S_b^*$

Equations for

Newtonian

$$\frac{P_e}{P_s} = \sin^2 \theta_b + \frac{P_a}{P_s} \cos^2 \theta_b \tag{52}$$

PC: Pressure is constant = last value

Prandtl - Meyer: Use table look up

P_e/P_s initial val. $\rightarrow$ initial ν_i

$$\nu_j = \nu_i + (\theta_i - \theta_j) \tag{53}$$

$\nu_j \rightarrow P_e/P_s$

Pressure Limit

$$\frac{P_e}{P_s} > \frac{P_a}{P_s} \tag{54}$$

Entropy Layer

$$\frac{P_i}{P_s} = \frac{P_i}{P_s} + \left(\frac{dp}{dx}\right)_i (x_j - x_i) \frac{1}{P_s} \tag{55}$$

Entropy Layer Equations,

$j = 0$

$$\frac{d(P_e/P_s)}{dx_b} = \frac{\gamma_s}{B_2} \cdot \left(\frac{P_e}{P_s}\right)^{\frac{\gamma_s + 1}{\gamma_s}} \cdot \left[\operatorname{Tan} \theta_b - \sqrt{\frac{\frac{P_e}{P_s} - \frac{P_a}{P_s}}{1 - \frac{P_e}{P_s} - \frac{P_a}{P_s}}}\right] \tag{56}$$

$$B_2 = (\gamma_s - 1) \left(\frac{P_{eb}}{P_s}\right)^{\frac{1-\gamma_s}{\gamma_s}} \cdot \int_0^{y_{bb}} \frac{P_e}{P_s} \, dy_b$$

$j = 1$

$$\frac{d(P_e/P_s)}{dx_b} = \frac{\gamma_s}{B_1}\left(\frac{P_e}{P_s}\right)^{\frac{\gamma_s+1}{\gamma_s}} \cdot \left\{ y_{bb}\tan\theta_b + \tan^2\theta_b\,(x - x_{bb}) \right. \cdot \qquad (57)$$

$$\left. \sqrt{\frac{\frac{P_e}{P_s} - \frac{P_a}{P_s}}{1 - \frac{P_e}{P_s} - \frac{P_a}{P_s}}} \left\{ 2B_1\left(\frac{P_e}{P_s}\right)^{-\frac{1}{\gamma_s}} + [y_{bb} + \tan\theta_b\,(x_b - x_{bb})]^2 \right\} \right\}$$

$$B_1 = (\gamma_s - 1)\left(\frac{P_{eb}}{P_s}\right)^{\frac{1-\gamma_s}{\gamma_s}} \int_0^{Y_{bb}} \frac{P_e}{P_s}\, y_b\, dy_b$$

(bb) subscripts refer to start of straight section ($\frac{d\theta}{ds} = 0$) and to conditions there.

12. Stagnation Point Velocity Gradient

An average stagnation point velocity gradient is needed to evaluate heating. A velocity gradient is obtained for both the windward and leeward meridians. For

$$0 \le \alpha < 90 - \theta_N \qquad \text{and} \qquad (180 + \theta_A) < \alpha \le 180$$

$$\left(\frac{du}{ds}\right)_s = \left(\frac{du}{ds}\right)_s = \frac{1}{2}\left(\frac{du}{ds}\right)_{wind} + \frac{1}{2}\left(\frac{du}{ds}\right)_{lee} \qquad (58)$$

For $(90 - \theta_N) \le \alpha \le (180 + \theta_A)$

$$\left(\frac{du}{ds}\right)_s = \frac{1}{2}\left(\frac{\overline{du}}{ds}\right)_s + \frac{1}{2}\,\frac{\sin\alpha}{(y_{os})}\sqrt{\frac{3\,\rho_a}{\rho_s}} \qquad (59)$$

where (y_{os}) is the value of y_o in zero angle of attack coordinates corresponding to the new stagnation point.

13. Laminar Heating

$$q_{LS} = \frac{0.76}{\sigma^{0.6}} \left(\frac{\rho_{bs}\ \mu_b}{\rho_s\ \mu_s} \right)^{0.1} \sqrt{\rho_s\ \mu_s}\ \frac{H}{778} \sqrt{\left(\frac{du}{ds} \right)_s} \cdot \left[1 + (L^a - 1)\ \frac{h_D}{H} \right] \tag{60}$$

$$\frac{q_L}{q_{LS}} = \frac{y_b^j\ \rho_b\ \mu_b\ U_e}{(1.068)\sqrt{2\xi}} \frac{(1 + 0.096\sqrt{\beta}}{\sqrt{2\ \rho_{bs}\ \mu_b \left(\frac{du}{ds} \right)_{W,L}}} \sqrt{\frac{2}{j+1}} \tag{61}$$

$$\frac{q_L}{(q_{LS})_{\alpha=0}} = \left(\frac{q_L}{q_{LS}} \right) \times \frac{q_{LS}}{(q_{LS})_{\alpha=0}} \tag{62}$$

$$\rho_{bs} = \frac{P_s M}{R\ T_b} \tag{63}$$

$$\mu = \mu(T) \qquad \text{Table took up} \tag{64}$$

$$\rho_b = \frac{P_e\ M}{R\ T_b} \cdot \tag{65}$$

14. Equations Modified by THETAT Input

$$U_e = \sqrt{2H}\ \sqrt{1 - \frac{T_e}{T_T}} \tag{66}$$

$$T_T = T_{ws}(\text{THETATI}) \tag{67}$$

$$\frac{T_e}{T_T} = \left(\frac{P_e}{P_s}\ \frac{P_s}{P_T} \right)^{\frac{\gamma_e - 1}{\gamma_e}} \tag{68}$$

$$\gamma_e = \gamma_w \text{ (THETATT)} \tag{69}$$

$$P_T = P_{ws} \text{ (THETATT)} \tag{70}$$

$$\frac{\rho_e}{\rho_T} = \left(\frac{P_e}{P_s} \; \frac{P_s}{P_T} \right)^{\frac{1}{\gamma_e}} \tag{71}$$

$$\rho_T = \rho_{ws} \text{ (THETATT)} \tag{72}$$

15. Reynold's Number

$$Re = \frac{\rho_e \; U_e \; S_b}{\mu_e} \tag{73}$$

16. Laminar Heating Parameters

$$\xi = \int_{S_1}^{S_j} \rho_b \, \mu_b \, U_e \, y_b^{2j} \; dS_b \; + \; \xi_1 \tag{74}$$

For,

$S_b \leq S_1$

$$\begin{cases} \xi = \rho_{bs} \; \mu_b \left(\dfrac{dU}{dS} \right) \; \dfrac{S_b^{\,2j+2}}{(2j+2)} \\ \\ \text{I} \qquad \left(\dfrac{dU}{} \right. \end{cases} \tag{75}$$

$$\beta = \frac{-2\xi}{(\rho_e \; U_e^{\,3} \; \rho_b \; \mu_b \; y_b^{\,2j})} \; \frac{d P_e}{d S_b} \quad , \quad \beta \geq 0 \tag{76}$$

17. Turbulent Heating

$$q_T = \frac{C_f}{2\,(778)} \; \rho_e \; U_e \; H \tag{77}$$

$$C_f = C_{f_i} \cdot \frac{C_f}{C_{f_i}} \tag{78}$$

$$C_{f_i} = \frac{0.0296\ (2)^{0.2j}}{\sigma^{2/3}\ \mathrm{Re}^{0.2}} \tag{79}$$

$$\frac{C_f}{C_{f_i}} = \left(\frac{\rho^*}{\rho_e}\right)^{0.8} \left(\frac{\mu^*}{\mu_e}\right)^{0.2} \tag{80}$$

$$\mu^* = \mu\,(T^*) \tag{81}$$

$$\frac{\rho^*}{\rho_e} = \frac{T_e}{T^*} \tag{82}$$

$$T^* = T_e \left\{1 + 1/2\left(\frac{T_b}{T_e} - 1\right) + 0.22\ (\sigma)^{1/3} \left(\frac{T_T}{T_e} - 1\right)\right\} \tag{83}$$

18. Radiation Heating

$$q_R = \frac{\xi_w}{2} \left[\frac{m}{m+1} I_b + \frac{1}{m+1} I_w\right] \tag{84}$$

19. Shock Shape

$$\xi_w = \frac{(x_b + \Delta_s)\cos\theta_w - y_b\,(1 - \sin\theta_w)}{\cos\theta_b - \sin(\theta_w - \theta_b)} \tag{85}$$

where,

x_b, y_b, are taken as

$$x_b = x_b^* \text{ and } y_b = y_b^* \begin{cases} \dfrac{d\theta}{dS} < 0 \quad 0 \le S < S_b^*, \text{ or} \\ \dfrac{d\theta}{dS} = 0 \text{ and } x_b^* \le (\Delta_{s_o}) \end{cases}$$

$$x_b = x_{bb} \text{ and } y_b = y_{bb} \begin{cases} \dfrac{d\theta}{dS} = 0 \text{ and } x_b^* > (\Delta_{s_o}) \end{cases}$$

$$R_w = \frac{\xi_w \cos \theta_b + y_b}{\cos \theta_w} \tag{86}$$

$j = 1$

$$C_1 \xi_w^2 + C_2 \xi_w + C_3 = 0$$

(Positive Root) (87)

$$C_1 = 2 \cos \theta_b \left\{ \frac{1}{2} \frac{\rho_e}{\rho_a} \frac{U_e}{V} + \frac{1}{n+2} \left[\frac{\rho_w}{\rho_a} \frac{U_w}{V} \cos (\theta_{wL} - \theta_b) - \frac{\rho_e}{\rho_a} \frac{U_e}{V} \right] \right\} - \cos^2 \theta_b$$

$$C_2 = 2y_b \left\{ \frac{\rho_e}{\rho_a} \frac{U_e}{V} + \frac{1}{n+1} \left[\frac{\rho_w}{\rho_a} \frac{U_w}{V} \cos (\theta_{wL} - \theta_b) - \frac{\rho_e}{\rho_a} \frac{U_e}{V} \right] \right\} - 2y_b \cos \theta_b$$

$$C_3 = - y_b^2$$

$j = 0$

$$\xi_w = \frac{y_b}{\frac{\rho_e}{\rho_a} \frac{U_e}{V} + \frac{1}{n+1} \left[\frac{\rho_w}{\rho_a} \frac{U_w}{V} \cos (\theta_{wL} - \theta_b) - \frac{\rho_e}{\rho_a} \frac{U_e}{V} \right] - \cos \theta_b} \tag{88}$$

Determination of ξ_w :

$$Y_w^2 (1 - B \tan^2 \theta_b) + Y_w [2R_w \tan \theta_b + 2B(X_b + \Delta_s) \tan \theta_b + 2BY_b \tan^2 \theta_b]$$

$$-2R_w [X_b + \Delta_s + Y_b \tan \theta_b] - B (X_b + \Delta_s)^2 - BY_b^2 \tan^2 \theta_b - 2B(X_b + \Delta_s) Y_b \tan \theta_b = 0 \tag{89}$$

$$\text{Tan } \theta_w^{\,j} = \frac{2R_w + 2B [X_b + \Delta_s - (Y_w - Y_b) \tan \theta_b]}{2 Y_w} \tag{90}$$

Evaluate B at first point where $\theta_b \leq 0$.

$$B = \frac{(Y_b + \xi) \tan \theta_w - R_w}{(X_b + \Delta_s)} \tag{91}$$

513

$$\text{Tan}\ \theta_w = \frac{(Y_b + \xi)}{X_b + \Delta_s} - \frac{R_w}{(Y_b + \xi)} \tag{92}$$

$\xi(\theta_w, 0)$ from equations 87, 88 (93)

Solve for $\xi_w, \theta_w, (S_b)$

$$\xi_w = \frac{Y_w - Y_b}{\cos \theta_b} \tag{94}$$

IV. IBM ROUTINES

A. PROGRAM FLOW

The program flow for the A and B parts of Program 1885 is illustrated in Figure 12 below.

1885A PROGRAM FLOW

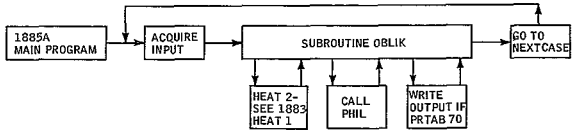

1885B PROGRAM FLOW

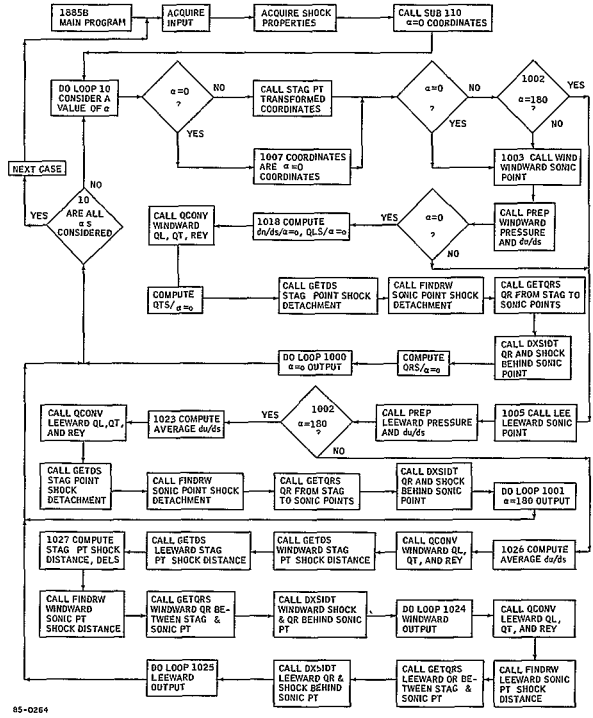

Figure 12 PROGRAM FLOW

B. COMMON STORAGE

Common data in 1885B is transferred between subroutines and the main program for two primary purposes, the first for computing zero angle-of-attack coordinates, (SUB110) and for computing the derivatives $\frac{d(P_e/P_s)}{dx}$ (PREP) or $\frac{d\xi}{dS}$ (DXSIDT), where the ADM4RB and DEREQB predictor-corrector system is used to solve numerically one or the other of these differential equations. Note that the COMMON DATA variables XMEMO and THETAC appear in equivalence statements, and are thus the first items in common storage core locations.

ALPHA	α	Program Input	SUB110 Input	Array of angles of attack.
BETA	β	Program Input	SUB110 Input	Tension shell angle.
CTHSTT		DXSIDT	DEREQB Input	Value of cos (THSTRT) at start of integration interval.
DATE		Program Input	In to SUB110	Identification number.
DNI		Not currently used.		
DN2		Program Input	PREP Input	Lower bound for accuracy in integrating $d(P_e/P_s)/dx$.
DTDSO	$\frac{d\theta_{o_1}}{dS_{o1}}$	SUB110	SUB110 Output	Array of $\frac{d\theta_{o_1}}{dS_{o1}}$ for $\alpha = 0$ coordinates.
DTDSST		DXSIDT	DEREQB Input	Value of $\frac{d\theta_b}{dS_b}$ at start of integration interval.
DTDSTB	$\frac{d\theta_1}{dS_1}$	Program Input	SUB110 Input	Array of $\frac{d\theta_1}{dS_1}$ for general shape.
GAMS	γ_s	Program Input or 1885A	DEREQB Input	Value of γ_s for calculation Input.
GM IO G		Main	DEREQB Input	$(\gamma_s - 1)/\gamma_s$

GP1ØG		Main	DEREQB Input	$(\gamma_s + 1)/\gamma_s$
GSØB	γ_s/B	PREP	DEREQB Input	γ_s/B_1 or γ_s/B_2 used to integrate $d(P_e/P_s)/ds$
HAMB	H	Program Input or 1885A	DEREQB Input	Enthalpy used to compute U_e/V, etc., for shock and radiation.
ICASE	CASE	Program Input	In to SUB110	Identification number.
ILINE		Main	SUB110 In & Out	The page number on printing $\alpha = 0$ coordinates.
IO1		SUB110	SUB110 Output	Sentinel 1, 2, 3, if section 3 is cone, tension shell, or general shape.
IO2		SUB110	SUB110 Output	Sentinel 1, 2, if section 10 is sphere of flat base.
IOTBL		Program Input	SUB110 Input	If = 1, $\alpha = 0$ coordination are printed.
IPAGE		Main	SUB110 In & Out	Page number on printing $\alpha = 0$ coordinates.
JFLØW	X_J	Program Input	DEREQB Input	Sentinel for 1-D or 2-D flow.
JOMAX		SUB110	SUB110 Output	Number of points in $\alpha = 0$ coordinate tables.
KINDEQ		DXSIDT or PREP	DEREQB Input	If 0, integrate $\frac{d(P_e/P_s)}{dx}$, if >0, integrate $d\xi/dS_b$.
M	M_{o_1}	SUB110	SUB110 Output	Array of section numbers for $\alpha = 0$ coordinates.
NALPHA		Program Input	SUB110 Input	Number of angles of attack on the array ALPHA.
NUMBER		Program Input	In to SUB110	Identification number.

ØØGS		Main	DEREQB Input	$1/\gamma_s$.
PAPØS		PREP	DEREQB Input	Value of P_A/P_S as a lower pressure limit for $d(P_e/P_s)/dX$ integration.
PIR		Main	SUB110 Input	deg/rad.
PSTART		DXSIDT	DEREQB Input	Value of P_e/P_s at start of integration interval.
PSTØP		DXSIDT	DEREQB Input	Value of P_e/P_s at end of integration interval.
RA	R_A	Program Input	In to SUB110	Aft cap radius.
RAD		Main	DEREQB Input	rad/deg.
RB	R_B	Program Input	In to SUB110	Flare and aft cone base radius.
RC	R_C	Program Input	In to SUB110	Cylinder and cone base radius.
REYT		Not currently used.		
RHØA	ρ_A	Program Input or 1885A	DEREQB Input	Ambient density.
RN	R_N	Program Input	In to SUB110	Nose radius.
RSB	R_{SB}	Program Input	In to SUB110	Toroidal radius.
RSC	R_{SC}	Program Input	In to SUB110	Toroidal radius at base of cone.
RSN	R_{SN}	Program Input	In to SUB110	Toroidal radius aft of nose.

RSØRA	ρ_s/ρ_A	Program Input or 1885A	DEREQB Input	Value of ρ_s/ρ_A for calculation.
RT	R_T	Program Input	In to SUB110	Base truncation radius.
RTBL	Y_1	Program Input	SUB110 Input	Array of y_1 for general shape.
SECTN		Main	SUB110 Input	Section number for labeling.
SO	S_{o_1}	SUB110	SUB110 Output	Array of S_o for $\alpha = 0$ coordinates.
SQ2HV2		Main	DEREQB Input	$(2H/V^2)^{1/2}$
SSTART		PREP or DXSIDT	DEREQB Input	Value of S_b at start of integration interval.
SSTØP		DXSIDT	DEREQB Input	Value of S_b at end of integration interval.
TA	T_A	Program Input or 1885A	DEREQB	Ambient temperature.
TABLE		Program Input or 1885A	DEREQB Input	Two-dimensional array of oblique and normal shock properties.
TANTB		PREP	DEREQB Input	Value of tan (θ_b) at start of straight section for $d(P_e/P_s)/dx$ integration.
TANTB2		PREP	DEREQB Input	$TANTB^2$
TB	T_B	Program Input	DEREQB Input	Body temperature.
THET		GETTWG	DEREQB Output	Value of θ_b corresponding to S_b in integrating $d\xi/dS_b$.

THETAA	θ_A	Program Input	In to SUB110	Aft cone angle.
THETAC	θ_C	Program Input	In to SUB110	Fore core angle.
THETAN	θ_N	Program Input	In to SUB110	Nose cap angle.
THETAO	θ_{o_1}	SUB110	SUB110 Output	Array of θ_o for α = 0 coordinates.
THETB	θ_B	Program Input	In to SUB110	Flare angle.
THET2G	θ_{2_G}	Program Input	SUB110 Input	Angle at first point on general shape.
THET3G	θ_{3_G}	Program Input	SUB110 Input	Angle at last point on general shape.
THSTRT		DXSIDT	DEREQB Input	Value of θ_b at start of integration interval.
THWGS		GETTWG	DEREQB Output	Value of θ_W corresponding to ξ from $d\xi/dS_b$.
THWLIM		Main	GETTWG Input	1.1 $\sin^{-1}\left(\frac{1}{\text{MACH}}\right)$, lower limit to θ_w for $d\xi/dS_b$.
TWØBB		PREP	DEREQB Input	2B, or $2B_2$ used to integrate $d(P_e/P_s)/dx$
UP1		Not currently used.		
UP2		Program Input	PREP Input	Upper bound for accuracy in integrating $d(P_e/P_s)/dx$.
V	V	Program Input or 1885A	DEREQB Input	Vehicle velocity.
XA	X_A	Program Input or 1885A	DEREQB Input	Mole fraction of Argon in undissociated mixture.

XC	X_C	Program Input or 1885A	DEREQB Input	Mole fraction of $C\emptyset_2$ in undissociated mixture.
XGB		Not currently used.		
XLC	L_C	Program Input	In to SUB110	Cylinder length.
XMEMØ	MEMØ	Program Input	In to SUB110	Identification number.
XMMX	MM	Program Input	FINDRW or DXSIDT Input	Used by FINDRW or DXSIDT to compute QR.
XN	N	Program Input	In to SUB110	Array of divisions per body segment.
XNN	X_N	Program Input or 1885A	DEREQB Input	Mole fraction of N_2 in undissociated mixture.
XNNX	NN	Program Input	DEREQB Input	Used to compute shock shape.
XO	X_{o_1}	SUB110	SUB110 Output	Array of x_o for $\alpha = 0$ coordinates.
XØ	$X_\emptyset$	Program Input or 1885A	DEREQB Input	Mole fraction of $\emptyset_2$ in undissociated mixture.
XSTART		PREP	DEREQB Input	Value of x_b at start of straight section for $d(P_e/P_s)/dx$ integration.
XTBL	X_1	Program Input	SUB110 Input	Array of x_1 for general shape.
YGB		Not currently used.		
YO	y_{o_1}	SUB110	SUB110 Output	Array of y_o for $\alpha = 0$ coordinates.
YSTART		PREP or DXSIDT	DEREQB Input	Value of Y_b at start of integration interval.

C. 1885A SUBROUTINES

CALLING SEQUENCES

ØBLIK	Variable Input or Output Source	RHØA, Sa, ambient density Input Program Input	XA, argon mole fraction in atmosphere Input Program Input	XC, CO_2 mole fraction in atmosphere Input Program Input	XN, N_2 mole fraction in atmosphere Input Program Input
XØ, O_2 mole fraction in atmosphere Input Program Input	XPL, print sentinel for converged iteration Input Program Input	XPE, print sentinel for each iteration Input Program Input	DELAL, movement in wave angle table Input Program Input	TA, Ta, ambient temperature Input Program Input	V, velocity Input Program Input
TABLE, table of oblique shock data Output ØBLIK	IGØØF, sentinel > 1 if solution impossible Output ØBLIK	PATAB, print sentinel Input Program Input	PA, ambient pressure Output ØBLIK	HA, ambient enthalpy Output ØBLIK	AM, Mach number Output ØBLIK
XM, mean molecular weight of atmosphere Output ØBLIK	HDHS90, dissociation energy for normal shock Output ØBLIK	QINSTP, lowest radiation intensity Input Program Input			
PHIL	Variable Input or Output Source	TABLE, table of shock data Input/Output ØBLIK/PHIL	ITH, index of last TABLE computed intensity Input ØBLIK	DELAL, increment in ϕ_w Input Program Input	IGOOF, sentinal > 1 if solution impossible Output PHIL

Calling sequences for all other subroutines are as in Section 1883

5282

1. ØBLIK

Purpose: To perform the oblique shock calculation and prepare a table of shock data, TABLE.

Method: TABLE is a two-dimensional array 46 x 13. The 13 columns contain the variables θ_W (THW), ρ_W/ρ_a (DENINV), $\rho_W U_W/\rho_a V$ (DENINV·UWØV), θ_{WL} (THWL), γ_W (GAMW), T_W (T), P_W/P_o (PRS), H_W/H (ENT·R·TO/(XM·HH)), ρ_{WS}/ρ_A (RWSØRA), P_{WS}/P_o (PWSØPØ), TWS (T·HMØRT Z/ENT), IW (2·QSUM/DEL), and IB (2·QSUM/DEL), where IB is evaluated at the enthalpy ENTB.

After initializing TABLE, defining output names (ZNAMI and ZNAM2), ØBLIK computes ambient conditions and selects the proper set of tables of temperature and enthalpy for the atmosphere. This is done before HVST is called after statement 1001. A loop from 1002 to the statement before 1024 then decrements the value of θ_W in decrements of DELAL until the lower limit in θ_W is reached and solved (If test before 1006), or until the wave intensity [TABLE(ITH, 12)]is less than the input INSTØP (test after 2005).

The first θ_W is for the normal shock (90 degrees), and the calculation is done in the same way as described in Program 1883. Provision for this special case is made by the IF test before statement 1017. For all other values of an iteration on the density ratio is performed, convergence being determined by two successive values of the density ratios differ by less than 1 percent (IF test before Statement 1022). The iteration for such value $90 > \theta_W \geq$ THWL is as follows. Given a first guess for the density ratio (DENR) from the preceding computation, the pressure and enthalpy are expressed as PRS and ENT (after Statement 1021) in terms of DENR, θ_W, and the ambient condition. HEAT2 is called which, as in 1883, converges on the pressure and enthalpy and in the process computes a new density ratio which, for convergence, approaches the estimated value. Corresponding to the last iteration is the radiation QSUM, which is simply related to IW [TABLE(ITH, 12)]. After convergence, IB [TABLE(ITH, 13)] is computed at the converged pressure PRS and a new enthalpy ENTB by HEAT2 before Statement 2004. If the problem fails to converge for the normal shock (test of 2000) IGØØF is set to 1 and control passed to the math program for the next case. If no convergence is obtained for other values of θ_W, a transfer is made to Statement 1004 which sets the tabular value of THW [TABLE(ITH, 1)] = 0, and the increments of the computation IINT. At the conclusion of the calculation subroutine PHIL is called if IINT > 0. This subroutine searches for values of THW which are zero and if there are any provides linear interpolation for the 12 shock property columns with θ_W as the independent variable. The output for each iteration (XPE>1) for every converged iteration (XPL>1) is provided by the tests between 1022 and 1024 and the Statements between 1009 and 1016.

If the body radiation intensity drops below the input INSTØP, a transfer is made out of the loop to Statement 1024. DØ loop 1028 provides an interpolation between the ambient γ(GAMA) and the last γ_w (GAMW) computed by the iterative procedure, using THW as the independent variable. All shock properties, except IW (which is set to 0) and IB (which is still computed until it also falls below INSTØP, then set to zero for smaller θ_w) are then expressed in terms of the interpolated value of γ (GAMI), the θ_w, and the ambient conditions.

2. PHIL

Purpose: To interpolate values of the shock properties using θ_w as the independent variable.

Method: Where TABLE(ITH, 1) are zero the solution was not found by iteration, the TABLE(ITH, 2-13) are linearly interpolated between successive successful iteration. If successive successful values are not found in TABLE(ITH, 1), IGØØF is set to 1 and control is returned to DBLIK, then the math program for the next case.

3. HEAT 2

Purpose: Described in Section 1883.

Method: Same as 1883, but the detachment distance is now computed and is always set = 0.1 by DBLIK.

All other subroutines are the same as 1883.

D. 1885 B SUBROUTINES

CALLING SEQUENCE

LEE	Variable Input or Output Sources	KKL, Section identification array Output LEE	XIL, X_0 array corres to X_b Output I EE	YIL, Y_0 array corres to Y_b Output LEE	XBL, X_b array Output LEE
YBL, Y_b array Output LEE	SBL, S_b array Output LEE	THETBL, array Output LEE	ISTAG, No of stag pt in XI. array Input STAGPT	IGOOF, If = 0, calculation o k Output LEE	XI stag pt Input LEE
Y1 stag pt Input STAGPT	S1 stag pt Input STAGPT	DTDSI, stag pt Input STAGPT	THETA stag pt Input STAGPT	M1 stag pt Input STAGPT	INØ, number of entries in XIL Output LEE
ALPH current Input Program Input	ISØNL, number at sonic pt in XIL Output LEE	THEBST, sonic point Input MAIN	DTDSL array Output LEE		

PREP	Variable Input or Output Source	X, X_b array Input WIND or LEE	Y, Y_b array Input WIND or LEE	S, S_b array Input WIND or LEE	DTDS, $d\theta_b/dS_b$ Input WIND or LEE
THETS, θ_b array Input WIND or LEE	ISØNQ, number of sonic pt, in table Input WIND or LEE	PRE, array of Pe/Ps Output PREP	THEBSQ, sonic θ_b^* Input MAIN	RSØRAQ, ρ_s/ρ_A Input Prog Input or 1885A	PWSQ, P_s Input Prog Input or 1885A
V, velocity Input Prog Input or 1885A	RHOA, ρ_A Input Prog Input or 1885A	IPTSQ, number of points in X array Input WIND or LEE	GAMS γ_s Input Prog Input or 1885A	RC, R_C Input Prog Input	JFLOW, J flow sentinal Input Prog Input
KKW, body identification array Input WIND or LEE	DSY, $\Delta_{\frac{s}{2}}$ array $\gamma_{\zeta=0}$ Input MAIN	RWY, $(R_w/\gamma')_{\zeta=0}$ array Input MAIN	RSA ρ_s/ρ_s array with DSY, RWY Input MAIN	RARST, ρ_s/ρ_s array with XSYST & DUTB Input MAIN	XSYST, X*/Y* array for DUTB Input MAIN
DUTB, $\frac{V_T}{V}\frac{du}{ds}$ 2-D array Input MAIN	GMTB, γ array with PMPSTB Input MAIN	PMPSTB, PMPSTB array with GMTB Input MAIN	XNT, ν array for Prandtl-Meyer Input MAIN	XNTI, P_e/P_s array, XNGM(1), Prandtl-Meyer Input MAIN	XNT2 P_e/P_s array XNGM(2), Prandtl-Meyer Input MAIN
XNT3, Pe/Ps array, XNGM(3), Prandtl-Meyer Input MAIN	XNT4, Pe/Ps array XNGM(r), Prandtl-Meyer Input MAIN	XNGM, ν array for use in Prandtl-Meyer Input MAIN	DPØDS $\frac{d(Pe/Ps)ds}{ds}$ array Output PREP	PA, P_A Input Prog Input or 1885A	DUDSSS, $du/_{ds}$ at stag pt Output PREP
XIW, non-trans X1 geometry array Input Sub110	UP2, upper limit to d(Pe/Ps)/dx integration Input Prog Input or MAIN	DN2, lower limit to d(Pe/Ps)/dx integration Input Prog Input or MAIN	IGØØF, if ≤ 0 computation satisfactory Output PREP		

QCØNV	Variable Input or Output Source	PREW, p_e/p_s array Input PREP	XMULPS, factor = Ps/PT Input MAIN	RHOBS, ρ_{BS} Input MAIN	TB, T_B Input Program
XMAMB, mean molecular weight Input Program Input or 1885A	RHOT, ρ_T Input MAIN	GAME, γ_e Input MAIN	XMUBB μ_{T_B} Input MAIN	YBW, Y_B array Input WIND or LEE	VISC, Viscocity table (with TMPVS) Input MAIN
TMPVS, temp table (with visc) Input MAIN	HAMB, enthalpy H Input Program Input or 1885A	TT, T_T Input Program Input or 1885A	DPDSW, d(Pe/Ps)/ds array Input PREP	QLW, Q_L array Output QCØNV	QTW, QT array Output QCØNV
INØW, number of entries th XBW Input WIND or LEE	REW, REY array Output QCØNV	JFLOW, flow Input Program Input	QLSAO, $(QLS)/_{\alpha=0}$ normalization Input MAIN	QLSW, QL normalizing factor Input MAIN	PWS, P_S Input Program Input or 1885A
SBW, S_b array Input WIND or LEE	ISONW, number of sonic pt th XBW Input WIND or LEE	DUDSW, du/ds windward or leeward Input PREP	SIGMA, input PN, Prandtl Number Input Program Input	QTSTAO, (QTS) $\alpha = 0$ normalization Input MAIN	RYNORM, REY normalization Input MAIN
DTDSW, $d\theta_b/ds_b$ Array Input WIND or LEE					

QRNMAD	Variable Input or Øutput Source	INØW, number of entries in QRAD Input WIND or LEE	QRAD, or array Input-Øutput GETQRS & DXSIDT QRNMAD	QRADNM, normalization factor Input MAIN

QRCLER	Variable Input or Output Source	INOW, number of X_b's in array Input WIND or LEE	QRAD, QR array Output QRCLER	STAND, array Output QRCLER

526<

GETTØT	Variable Input or Output Source	TI, Indep. Variable Input Calling Program	TTB, Indep Variable array Input Calling Program	PD, 1st dep. variable Output GETTØT	PTB, 1st dep variable array Input Calling Program
ROD, 2nd dep variable Output GETTØT	ROTB, 2nd dep. variable array Input Calling program	TTD, 3rd dep. variable Output GETTØT	TTAB, 3rd dep variable array Input Calling program	GAD, 4th dep. variable Output GETTØT	GATB, 4th dep. variable array Input Calling program

HDPRN	Variable	ICASE	IPAGE	ILINE	NUMBER
	Input or Output Source	Input Program input	Input Main	Input Program input	Input Main
MEMØ Input Program input	DATE Input Program input	KPRINT Output HDPRNI			
DERQ5	Variable Input or output Source	NZ Input ADAMS4	XEQ Input ADAMS 4	XIND Input ADAMS 4	DXEQ Output DERQ5
L Input ADAMS4	PAR Input Dummy variable	NPAR Input Dummy variable			

TABLES	Variable Input or Output Source	RASDØY Output TABLES	EPDØY Output TABLES	DØY Output TABLES	TMPVS Output TABLES
VISC Output TABLES	DSY Output TABLES	RWY Output TABLES	RSA Output TABLES	DUTB Output TABLES	RARST Output TABLES
XSYST Output TABLES	GMTB Output TABLES	PMPSTB Output TABLES	XNGM Output TABLES	XNT Output TABLES	XNTI Output TABLES
XNT2 Output TABLES	XNT3 Output TABLES	XNT4 Output TABLES			

WIND	Variable Input or Output Source	KKW, Section identification array Output WIND	X1W, X_o array, corres to X_b Output WIND	X1W, array corres. to Output WIND	XBW, X_b array Output WIND
YBW, Y_b array Output WIND	SBW, S_b array Output WIND	THETBW, Output WIND	ISTAG, No of stag pt in X_I, etc Input STAGPT	IGØØF, If = 0 calculation O K Output WIND	X1 stag pt Input STAGPT
Y1 stag pt Input STAGPT	S1 stag pt Input STAGPT	DTDS1 stag pt Input STAGPT	THETA1 plus stag pt Input STAGPT	M1 = 0 sections, plus stag. pt Input STAGPT	INØ, number of entries m X1W Output WIND
ALPH 1 current Input Program Input	ISØNW, number at sonic pt th X1w Output WIND	THEBST, sonic point Input MAIN	DTDSW, array Output WIND		

528<

GETNU	Variable Input or Output SOURCE	XNT, dependent variable array Input PREP	XNT1, independent variable array Input PREP	XNU, dependent variable Output GETNU	PØPT, independent variable Input PREP

ACØSH	Variable Input or Output SOURCE	ARG, argument of $\cosh^{-1}$ Input Calling Program	ANS, $\cosh^{-1}$(ARG) Output ACØSH	IGOOF, if ≥ 0, calculation O. K. Output ACØSH

The subroutine SUB110 receives all input and provides all output through CØMMØN DATA. In addition to their calling sequences, the following subroutines use CØMMØN for some input and output; GETTWG, PREP, WIND, LEE, STAGPT, DXSIDT, and DEREQB.

Subroutine UN08 has no calling sequence.

The calling sequences for the general purpose routines ADAMS4 and ARTLU are explained in the section on special routines.

5363

FINDRW	Variable Input or Øutput Source	XIW, X_b corres to X_b array Input WIND or LEE	XIW, Y_b corres to X_b array Input WIND or LEE	XBW, X_b array Input WIND or LEE	YBW, Y_b array Input WIND or LEE
SBW, S_b array Input WIND or LEE	THETBW, array Input WIND or LEE	DTDSW, array Input WIND or LEE	KKW, Section I. D array Input WIND or LEE	ISØNW, Index of sonic pt MX_b Input WIND or LEE	INØW, number of entries MX_b Input WIND or LEE
RSØRA, Input Prog Input or 1885A	DOY, 2D array of Input MAIN	RASDØY, array for DØY Input MAIN	IGØØF, if ≤ 0, calculation o k Øutput FINDRW	IFLOW, flow sentinel Input Prog Input	INDDUM, index of Y_T in YWB Input GETDS
DELS, Input GETDS	THW, 1st col of table Input Prog Input or 1885A	RUØRV, column 3 of table Input Prog Input or 1885A	THWL, column 4 of table Input Prog Input or 1885A	XNNX, NN used to compute Input Prog Input	PREW, array Input PREP
HAMB, enthalpy Input Prog Input or 1885A	GAMS, Input Prog Input or 1885A	V, velocity Input Prog Input or 1885A	THETAW, at Y_T Øutput FINDRW	RW, R_{ℓ}, radius of bow wave Øutput FINDRW	XSI2, at Y_T Øutput FINDRW
TDUMI, comumn 5 of TABLE Input Prog Input or 1885A	TDUM2, column 6 of TABLE Input Prog Input or 1885A	BSHOCK, B_SSHOCK Parameter Øutput FINDRW	THWLIM Smallest Input MAIN		

GETB	Variable Input or Øutput Source	PRE, array Input PREP	Y, Y_b array Input WIND or LEE	GAMS, Input Prog Input or 1885A	RC, R_c Input Program Input
MS, number of section on which I falls Input PREP	MB 2EL, number of section of end of B_1 B2 integration Øutput GETB	I, index of pt in Y considered Input PREP	JJJJ, flow index (JFLOW) Input Program Input	BB, B_1 or B_2 for $d(P_e/P_s)/dx$ calc. Øutput PREP	M, array of section I, D Input WIND or LEE
THET, array Input WIND or LEE	ISTOP, index of last pt in integration of Øutput PREP				

GETDS	Variable Input or Øutput Sources	XIW, X_o corres to XBW Input WIND or LEE	YIW, Y_o array corres to YBW Input WIND or LEE	XBW, X_b array Input WIND or LEE	YBW, Y_b array Input WIND or LEE
SBW, S_b array Input WIND or LEE	THETBW, array Input WIND or LEE	KKW, Section I D array Input WIND or LEE	ISØNW, number of sonic pt. in XBW Input WIND or LEE	INØW, number of entries in XBW Input WIND or LEE	ALPHAI, Input Program Input
RSORA, Input Prog Input or 1885A	RN, R_N Input Program Input	JFLØW, flow sentinal Input Program Input	DØY, 2D array of Input MAIN	RASDOY, array for DØY Input MAIN	EPDOY, array for DØY Input MAIN
IGØØF, if ≤ 0, calculation o k Øutput GETDS	DTDSW array Input WIND or LEE	DELS, , stag pt detachment Øutput GETDS	INDDUM, index of Øutput GETDS		

GETPRE	Variable	XNT, independant variable table	XNT1, dependent variable table	XNU, independent variable	PRES, dependent variable
	Input or Output	Input	Input	Input	Input
	Source	PREP	PREP	PREP	GETPRE

GETQRS	Variable	XBW, X_b array	YBW, Y_b array	THETBW,	RW, R_W at Y_T	
	Input or Output	Input	Input	Input	Input	
	Source	WIND or LEE	WIND or LEE	WIND or LEE	FINDRW	
DELS, from stag pt	BSHOCK, B_S shock shape parameter	ORAD, OR array	STAND, array	THW O_W array	TIW I_W array	PREW P_e/P_s array
Input	Input	Output	Output	Input	Input	Input
GETDS	Program Input or FINDRW	GETQRS	GETQRS	Program Input or 1885A	Program Input or 1885A	PREP
TPR P_W/P_O array	TIB I_B array	XMMX, MM to compute QR	TRW array	PWS, P_S Input Program	INØW, No of points in XBW array	RC, R_C radius
Input	Input	Input	Input	Input	Input	Input
Program Input or 1885A	Program Input or 1885A	Program Input	Program Input or 1885A	Program Input or 1885A	WIND or LEE	Program Input
THW LIM, θ_{w} LIMIT smallest value of θ_w						
Input						
MAIN						

1885B SUBROUTINE DESCRIPTIONS

1. PREP

Purpose· To compute the pressure distribution and velocity gradient for the body.

Method· The pressure distribution is divided into two parts, one the area between stagnation point and sonic point, and two the area aft of the sonic point.

If there is no straight section before the sonic point, (see tests near Statement 1000), and if the ratio X/Y sonic point $\geq (1-\sin(\theta_b^*))/\cos(\theta_b^*)$, then the forward pressure distribution is assumed Newtonian (DØ LØØP 1003). The velocity gradient is computed with JGØ = 1 by the correlation using the input tables DUTB, XSYST, and RARST. (Statements 1008 to 1021).

If there is no straignt section, but X/Y sonic point $< \frac{1-\sin(\theta_b^*)}{\cos\theta_b^*}$, then the above velocity gradient is computed (1008 to 1021), but with JGØ = 2, which then uses du/ds to compute a polynomial distribution (Statements 1024 to 1026).

If a straight section exists before the sonic point, then a polynomial pressure distribution is computed,
if $\frac{d\theta}{dS} = 0$ at stagnation point; then du/ds is computed by the correlation at Statement 1007. Otherwise du/ds is computed as above.

After the distribution to the sonic point is computed (by Statement 1027) the DØ 1067 loop beginning after Statement 2008 computes all the following pressures. First, however, a table lookup is done to compute the pressure ration PMØPS , a function of γ_S. Statements 2000 to 2008 establish indexes used with the Prandtl-Meyer calculation. After the DØ1067 the Statements 3002 to 2013 are used to assure that the first pressure computed on Section 5 or a flatbased section 10 is done by Prandtl-Meyer. If the $d\theta/ds > 0$, for the current point, the pressure is computed by the Newtonian approximation (1028). If $d\theta/ds = 0$, $\theta < 0$, the pressure is constant (1031). If $d\theta/ds = 0$, $\theta \geq 0$, then a test is made (1032). If the previous pressure was $\leq$ PMØPS , the Entropy-Layer formulation is used (Statements 1033 to 3008). This involves the use of the ADAMS4 integration system to integrate the differential equation $d(P_e/Ps)/dx$. This derivative involves a constant BB, which itself is an integral from the stagnation point to the beginning of the straight section. Subroutine GETB computes this constant, and the quantity MB2EL assures that it is computed only once per straight section.

If $d\theta/ds = 0$, and the previous pressure was > PMØPS at Statement 1032, then constant pressure is assumed (Statement 1031).

If $d\theta/ds < 0$, a test is made at Statement 1040. If the previous pressure > PMØPS, Newtonian is assumed (1028). Otherwise, Prandtl-Meyer is assumed (Statements 1041 to 1064).

As each pressure PRE_i is computed, so is its derivative $DP\emptyset DS_i$. If the pressure ever becomes less then P_A/P_S (PAØPS), then the pressure is held constant at PAØPS (loop 1005) for the rest of the body.

2. QRCLER

Purpose: To set each entry of the arrays QRAD and STAND to zero before the calculation QR_i and XSI_i are initiated.

Method: DØ LØØP 1000.

3. QCØNV

Purpose: To compute the heating quantities QL_i, QT_i, and REY_i for each point on the body.

Method: The distributions QL_i, QT_i, and REY_i are computed by the DØ LØØP 1011. Between entry and the DØ 1011, all constants independent of the body are computed. The QL_i computed uses the term BETA (1004, 1003), involving the trapezoidal integration of the function $\rho_b u_e \gamma_i^{2j}$, and ξ (not related to the shock ξ). When the surface distance $S_{b_i} \leq 0.2\ S_{b,\ sonic}$, a limiting form of ξ and BETA is provided (Statements 1000 to 1001). If $S_{b_i} > 0.2\ S_{b,\ sonic}$, then the ξ and BETA are computed between 1001 and 1004, where the trapezoidal integration also is done. The QL_i, QT_i, and REY_i are computed between Statements 1002 and 1011.

4. GETTØT

Purpose: To perform table look-up using columns of the table of normal and oblique shock properties TABLE

Method: It was necessary to write GETTØT because two columns of independent variables on TABLE, θ_W (column 1) and PW/PO (column 7) are monotonically decreasing and thus not suitable for ARTLU. The maximum number of dependent variables is 4, when the subroutine is called by the MAIN program to compute "total" conditions. When it is called with fewer dependent variables of interest (e. g. by FINDRW, GETQRS), dummy variables are included.

5. WIND

Purpose: To compute the transformed body coordinates for the wind ward side at angle of attack, and include in these tables the coordinates of the sonic point.

Method: The DØ LØØP 1012 first transforms the zero angle-of-attack coordinates by using the input values of α (ALPHI), and the XBRAL and YBRAL included in the zero angle-of-attack tables by STAGPT as the alpha = 0 coordinates of the stagnation point of the body at the current α. The difference in definition of x_b, y_b, θ_b done at the Statement 1002 reflects the fact that the windward side must go around the α = 0 rearward point and back up the other (α = 0) side. The table is considered complete whenever $|\theta_b| > 90$ (Statement 1010), or y_b passes through zero (1006). The statements between 1014 and 1029 compute the co-ordinate of the sonic point ($\theta_b = \theta_b$ *). If the sonic point falls on a straight section, it is defined to be the start of that section (1023). Otherwise an interpolation is done using $d\theta/ds$ of the section containing the sonic point (DØ LØØP 1020), and the sonic point coordinates are computed at Statement 1026. The DØ LØØP 1027 rearranges the x_b, y_b, etc., tables so that the sonic point co-ordinates fall in their proper sequence, with index = ISØNW. Proper sequence is determined by the fact that the SBW table must be monotonically increasing.

6. LEE

Purpose: Same as WIND above, but for leeward side.

Method: Same as WIND above, except for co-ordinate definitions at Statements 1002 to 1005.

7. GETDS

Purpose: To compute the detachment distance of the bow wave normal to the body at the stagnation point.

Method: GETDS computes the detachment Δ_s by choosing among several correlations involving the density ratio ρ_A/ρ_s and body geometry.

If there are no straight sections between the stagnation point and the sonic point, and JFLOW = 0, then the Δ_s is computed from a simple algebraic evaluation involving $\cosh^{-1}$ (between Statements 1001 to 1008). For the purposes of $\cosh^{-1}$ only, if the inverse of the argument is ≥ 1, it is set to a limit 3/3.1.

If there were no straight sections and JFLØW > 0, then the Δ_s is computed from a correlation involving the tables RASDØY, EPDØY, and DØY. The table DØY is $\Delta_s/Y_T = f(\epsilon, \rho_A/\rho_s)$, Y_T here is defined as y_b^* at the sonic point, ρ_A/ρ_s = RAØ RS, and ϵ = EPSLT = x_b^*/y_b^* at the sonic point.

If there is a straight section before the sonic point, and JFLØW $\leq$ 0, the ΔS is computed from the function using $\cosh^{-1}$, but with the (DTDSMP) redefined between Statements 1020 and 1026. If JFLØW > 0 and $x_b^* \geq \Delta_{so}$, then the correlation from tables DØY, EPDØY, and RASDØY is performed with Y_T and ϵ = EPSLT redefined between Statements 1028 and 1032. If JFLØW > 0 and $x_b^* < \Delta_{so}$, DELS = $\Delta_{so} - x_b^*$ at Statement 1037.

The index INDDUM is either the index of the sonic point or the beginning of a straight section, depending on which point was used to determine Y_T.

8. GETQRS

Purpose: To compute the radiation QRAD and normal detachment distance STAND along the meridion.

Method: The detachment distance $STAND_1$ and $QRAD_i$ are computed in DØ LØØP 1010 by solving a quadratic which is a function of RW, the body co-ordinates and the shock parameter BSHOCK, between the DØ 1010 and Statement 1033. Given the distance and the pressure distribution, subroutine GETTØT is used to look up the intensities, first from the wave angle THWW and then from the local pressure PARG. Three dummies are used in each table, look up (see GETTØT). The $QRAD_1$ is computed prior to 1010.

9. STAGPT

Purpose: To locate in the zero angle-of-attack co-ordinates the co-ordinates of the new stagnation point at $\alpha \neq 0$, and place this point in the tables.

Method: In the IF LØØP between 1030 and 1029, the program finds all points for which the local body angle $\theta_b + \alpha = 90$. It does this by seeking a change of sign in the residual. If the point is not identical to a point in the $\alpha = 0$ tables, $d\theta/ds$ is computed and the co-ordinates are interpolated (1022 to 1025). If the point is identical to a point in the $\alpha = 0$ table, this fact is noted (1026). If the point falls on a straight section, the new stagnation point is arbitrarily defined to be at the middle of the straight section (1003 to 1007).

For each candidate for the stagnation point, the quantity XBRAL is computed (1027). The point which maximizes this quantity is defined to be the stagnation point (1028 to 1029). The statements between 1033 and 1040 are used to define the arrays X1, Y1, etc., which contain the $a = 0$ co-ordinates (X0, Y0, etc.) plus the stagnation point, whose index in X1, etc. is ISTAG. It is placed in the co-ordinate tables in such fashion that S1 is monotonically increasing.

10. GETB

Purpose: To compute the constants B1 or B2 used in computing the pressures by integrating the differential equation $d(P_e/P_s)/dx$

Method: GETB computes BB which involves an integral of the pressures and geometry between the stagnation point and the beginning of the straight section on which the ith (current) point lies. Since the integral is only to the start of the section, ISTØP, the index of the starting point in the x_b table, and MB2EL, the identification number of the straight section are computed in the DO 1003 loop. These quantities are used to guarantee that the calculation is done once for each straight section on which the entropy layer equations are used, and not once for each output point on the section. The integration is done trapezoidally in DØ LØØP 1008. The integrand depends on JJJJ, which is the flow index JFLOW. The argument BB in the calling sequence is the value of either B1 or B2, whichever is appropriate.

11. QRNMAD

Purpose: To normalize the array QRAD by QRADNM.

Method: If QRADNM is > 0, each entry in QRAD is divided by it in DØ LØØP 1002.

12. GETPRE

Purpose: Given a value of ν (XNU) and a ν table (XNT), to compute a corresponding Pressure (PRES) from the table XNT1.

Method: Linear interpolation in DØ LØØP 1002 and Statement 1003.

13. FINDRW

Purpose: To compute the bow wave radius RW, and the parameter BSHOCK by computing the detachment distance and wave angle (XSI2 and THETAW) at the body point whose index is INDDUM, and at the first point where $\theta_w \leq 0$.

Method: FINDRW computes the shock-shape parameters RW and BSHOCK by computing the shock angle and detachment distance at two points on the body, the first (ICØMP = 0) defined as the point on the geometry tables with index INDDUM, and the second (ICØMP = 1) being the most forward point with $\theta_b \leq 0$. The point indexed by INDDUM is either the sonic point or the start of a straight section if it occurs ahead of the sonic point and if $x_b^* \geq$ DELTST as defined by Statement 1003.

The method of iteration is to compute for a point on the body and a value of θ_w (initially set to θ_b) two values of detachment distance XSI1 and XSI2. When ICØMP = 0, XSI1 is obtained from Statement 1071, and when ICØMP > 0 from the (largest) positive root of a quadratic (Statements 1044 to 1047). XSI2 is always obtained from the (largest) positive root of the quadratic computed between 1052 and 1057. If the relative difference between XSI1 and XSI2 is $\leq 10^{-4}$, the computation has converged (after 1022). If it has not converged, then the value of THET = θ_w is modified until a change of sign in the residual indicates a near root (Statement 1026). At this time the $\Delta\theta_w$ is decreased and the successive approximations continued. If a successive redidual is larger in absolute value than the former value (divergence) the sign of $\Delta\theta_w$ is changed (1029). If this happens twice, then the residual has passed through a minimum without finding a root, and transfer is made to Statement 1041 which sets IGØØF = 1 and prints the message CANNØT FIND THETA FØR RW ØR B, SKIP CASE. Control then is passed to the main program. If no solution is found in 600 iterations, IGØØF is set to 1 and the return is executed (1034 et. seq.). After the first pass (ICØMP = 0) RW is computed and the reference geometry is changed to the most forward point at which $\theta_b \leq 0$ (Statements 1038 to 1070). After the second pass (ICØMP = 1), the shock shape parameter BSHØCK is computed (1070) and a normal RETURN is executed.

14. GETNU

Purpose: Given a value of pressure PØPT and a pressure table XNTI, to compute a corresponding ν from the table XNT.

Method: Linear interpolation in DØ LØØP 1002 and statement 1003.

15. ACØSH

Purpose: To compute $\cosh^{-1}$ (ARG).

Method: Expansion in DØ LØØP 1000 for ARG > 1.

16. DERQ5

Purpose: To compute the derivatives $d(P_e/P_s)/dx$ or $d\xi/dS_b$.

Method: $d(P_e/P_s)/dx$ is computed between 1002 and 1008 by using the current values of P_e/P_s (PRS), X (XIND), and data in COMMON storage computed by PREP. DERQ5 is called by the predictor-corrector routine ADAMS4.

17. SUB110

Purpose: To compute $\alpha = 0$ coordinates

Method: SUB110 computes $\alpha = 0$ body data in the large DO LOOP 20. For each of 10 segments, the input array N (XN) contains a number. For each of the segments but 3 and 10 this should be of the form X where X is an integer giving the number of increments in the section. For the third section X.1 is a cone, X.2 is a tension shell, and X.3 is a general shape (statement 50), X still being the number of increments. For Section 10 X.1 is an aft sphere, and X.2 is a flat base (statement 120). The index J1 counts the points, and the total number of points in each X0, Y0, etc. array is JOMAX. The appropriate equations for each section are determined by the computed GOTO at statement 10, and if $XN_1 = 0$, the ith section is omitted. If the input sentinel IOTBL $\neq 1$, the co-ordinates are printed out (statement 131).

18. ADAMS4

Purpose: To numerically integrate differential equations by a predictor-corrector method.

Method: See the writeup of ADAMS4 in the section special subroutines.

19. TABLES

Purpose: To define tables used in the computations.

Method: Each element of each table is set to the appropriate numerical value in an arithmetic statement.

20. HDPRNI

Purpose: To print identification material at the beginning of each case.

Method: The appropriate "WRITE" and "FORMAT" statements are used.

21. UNO8

Purpose: To define logical tape 8 as the binary input-output tape SYSUT5.

Method: UNO8 is a MAP subroutine containing the necessary FILE information.

E. 1885 A MAIN PROGRAM

Purpose: To acquire input for the oblique shock calculation and prepare a binary tape of shock data for Program 1885B.

Method: Having acquired the values of the input, control is passed to subroutine OBLIK which performs the shock calculation. If a binary tape is to be prepared for 1885B, the tape is rewound for a first case (XFIRST = 0, Statement 1001) and not rewound for successive cases until ILAST is input > 0 (Statement 1005).

F. 1885 B MAIN PROGRAM

Purpose: The purpose of the main program is to acquire tables and input used by the calculation, provide output, and control the order of the calculations of the heating and pressure distribution at each angle of attack for both leeward and windward sides.

Method: Common data, dimension statements, and definition of the Namelist array INPUT occur in the MAIN program before input is acquired. CALL TABLES provides the constant tables to be used by the program. Preset variables are then set, and the data read in through the Namelist array INPUT. The CALL SUB110 statement provides for the computation and subsequent output of the zero angle of attack coordinates.

The statements between CALL SUB110 and 1035 provide for oblique and normal shock data to be read from TAPE 38, if the input quantity TAPE (XTP) > 0, implying that these data are to come from an 1885A calculation. After Statement 1035 pertinent gas properties are defined from these data taken at wave angle (θ_w) = 90 degrees.

In the statements preceding 1017, "total conditions", P_T, ρ_T, T_T, γ_e are defined at θ_w = 90 or by table look-up (CALL GETTØT) at θ_w = THETAT (THTØT), depending on the input TTØ. Before the DØ 10 statement further gas properties are defined, as is the Reynolds number normalization RYNØRM.

The DØ LØØP 10 extends to the end of the MAIN program, and controls as a monitor the sequence of calculations performed for each angle of attack. The first entry of the array ALPHA must be 0. The flow diagram (Section

A above) should be helpful, as the entire function of the MAIN program in this loop to control the logic. Since the leeward and windward sides of the vehicle at angle of attack are nearly independant of each other, there are virtually no significant equations in the loop.

When $\alpha = 0$ or 180, the body is symmetric and only one side need be computed. At $\alpha = 0$ it is the windward side, Statements 1018 to 1000, in which four normalizing factors are computed, QLSAO and DUDSAO for QL, QTNØRM for QT, and QRADNM for QRAD, if the radiation is to be computed (CØMQRD > 0 in the input).

When $\alpha = 180$, the same sequence is performed for the leeward side, Statements 1023 to 1001, using the previously computed normalization.

When $0 < \alpha < 180$, calculations are performed in the proper sequence first for the windward side and then for the leeward side, and all but the coordinates are computed between Statements 1026 and 1025. When both sides are computed two averages must be found, one a mean value of du/ds (DUDSD) between Statements 1026 and 1022, which assures continuity of heating at the stagnation point (common to windward and leeward sides), and the other is the detachment distance (DELS) from the stagnation point, which is computed between Statements 4002 and 1029.

There are several co-ordinate tables used. XO, YO, SO, DTDSO, THETAO, and M in CØMMØN are the zero angle-of-attack coordinates. The tables X1, Y1, S1, DTDS1, THETA1, and M1 are these tables plus one additional point, the stagnation point at the current value of α. The tables XBW, YBW, SBW, THETBW, and KKW are the body coordinates of the windward side after the translation and rotation implied by the angle of attack, and the tables X1W and Y1W are the $\alpha = 0$ coordinates from which the body coordinates were transformed. On the leeward side the tables are analagous to the above seven, except the letter "W" is replaced by "L".

For each side of the body, the sequence is as follows

1) Obtain the stagnation point coordinates in the $\alpha = 0$ reference by calling STAGPT (Statement 1009) if $\alpha \neq 0$, acquiring the tables X1, Y1, etc., and the index of the stagantion point ISTAG.

2) Obtain the windward (leeward) body coordinates by transforming X1, Y1, etc., to XBW (XBL), YBW (YBL), etc., by calling subroutine WIND (LEE). The first point in XBW (XBL) will be the stagnation point at the current α, and in addition the coordinate tables include the coordinates of the sonic point, whose index is IS ØNW (ISØNL). There are INØW (INØL) entries in each of these tables.

3) Compute the pressure distribution and du/ds for the windward (leeward) side by calling PREP to obtain the array PREW (PREL), and the quantities DUDSW (DUDSL).

4) From this point the windward and leeward sides data are completely indepedent. CALL QCØNV provides for the computation of the heating data QLW, QTW, and REY. This is provided as output for the windward side, and when the leeward calculation is made the distributions are stored in the same arrays.

5) If CØMQRD in input is ≤ 0, go to Step 10.

6) If RWØ, BSHØCT, DELT are input, SKIP to Step 9.

7) Obtain the detachment distance DELS from the stagnation point, which is provided by GETDS.

8) Obtain the shock detachment distance XSI2 and the shock angle THETAW from the point whose index is INDDUI from the windward side and INDDU2 from the Leeward side. This point is either the sonic point or the start of a straight section if there is such a section between the stagnation point and the sonic point. Also obtain the bow wave radius RW, and shock parameter BSHØCK, these quantities coming from the subroutine FINDRW.

9) Obtain the radiation heating (QRAD) and detachment distance (STAND), (Windward or leeward). This is done by subroutine GETQRS.

10) Provide the pressure and heating quantities as output for the windward and leeward side.

Most of the subroutines have as an argument the sentinal IGØØF, which if >0 indicates that the computation is unsatisfactory and the next angle of attack is considered.

G. 1885A SIGNIFICANT EQUATIONS

1. Main

None.

2. PHIL

None.

3. ØBLIK

ρ_w/ρ_a = DENINV from iteration of IW $\geq$ INSTØP

= (GAMI + 1) + AM^2 · sin$^2\theta_w$/{(GAMI − 1) · AM^2 · sin$^2\theta_w$ + 2}

GAMI interpolated when IW < INSTØP

$\rho_w U_w/\rho_a V$ = DENINV + UWØV ,

UWØV = $[\cos^2\theta_w + \text{DENR}^2 \sin^2\theta_w]^{1/2}$, DENR = 1/DENINV

$$\theta_{WL} = \tan^{-1}\left\{\frac{[\sin\theta_w \cos\theta_w (1 - \text{DENR})]}{[\cos^2\theta_w + \text{DENR} \cdot \sin^2\theta_w]}\right\}$$

γ_w = (DENINV + 1.)/(DENINV − 1) if IW $\geq$ INSTØP

= GAMI , interpolated if IW < INSTØP

T_w = T from HEAT2 iteration if IW $\geq$ INSTØP

= HWMRTZ · R · TO/XM if IW < INSTØP , where HWMRTZ =

HMØRTZ {1 − V^2 × 0.5 [DENR^2 × sin$^2\theta_w$ + cos$^2\theta_w$]/HH}

HMØRTZ and HH from ambient condition (after 1001).

P_w/P_o = PRS = RHØR · V^2 × sin$^2\theta_w$ (1 − DENR)/P_o + PA/P_o

HW/H = ENT · R · T_o/(XM HH) when ENT = f(DENR) if IW $\geq$ INSTØP

= HWMRTZ R T_o/(XM HH) if IW < INSTØP

ρ_{ws}/ρ_a = DENINV · (PWSØPØ/PRS)$^{(1/GAMW)}$

$$\text{PWSØPØ} = \text{PRS}\left[\frac{1}{\left[1 - \frac{V^2}{2 * HH}\left(\frac{U_w}{V}\right)^2\right]}\right]^{\frac{GAMW}{GAMW-1}} \quad \text{if IW} \geq \text{INSTØP}$$

$$\text{PWSØPØ} = \text{PWØPZ}\left[\frac{1}{\left[1 - \frac{V^2}{2 \cdot HH}\left(\frac{U_w}{V}\right)^2\right]}\right]^{\frac{GAMI}{GAMI-1}} \quad \text{if IW} < \text{INSTØP}$$

P_{ws}/P_o = PWSØPØ , see above

TWS = T · HMØRTZ/ENT if IW $\geq$ INSTØP

= T · HMØRTZ/HWMØRTZ if IW < INSTØP

IW from HEAT2 = $\frac{2 \cdot QSUM}{DEL}$ evaluated at P = PRS and H = ENT if IW $\geq$ INSTOP

= 0 if IW < INSTØP

IB from HEAT2 = $\frac{2 \cdot QSUM}{DEL}$ evaluated at P = PRS and

H = ENTB = HMØRTZ $(PRS/PWSØPØ)^{[(GAMMA - 1)/GAMMA)]}$

PWSØPØ and GAMMA here evaluated only at $\theta_w = 90$

H. 1885B SIGNIFICANT EQUATIONS

1. MAIN

STATEMENT NUMBERS

REYA = RYNØRM = $\frac{RHØA \cdot V \cdot 2 \cdot RC}{XMUAAA}$, XMUAAA = $\mu|_{TA}$ 1017

$\theta_b^* = THEBST = ASIN \left[\left(\frac{2}{GAMS + 1} \right)^{\frac{GAMS}{GAMS - 1}} \right]$ 1017

$QL_s|_{\alpha=0} = QLSAO = \frac{0\ 76}{SIGMA^{0.6}} \cdot \left(\frac{RHØBS \cdot XMUBBB}{RHØSS \cdot XMUSSS} \right)^{0\ 1} (RHØSS \cdot XMUSSS)^{0\ 5}$

$\cdot \frac{HAMB}{778.} \cdot (DUDSAO)^{0.5} \cdot [1 + (EL^{ALPQ} - 1) \cdot HDHS90]$ 1018

ρ_{BS} = RHØBS = $\frac{PWS \cdot XMAMB}{89516 \cdot TB}$, μ_B = XMUBBB = $\mu|_{TB}$,

μ_s = XMUSSS = $\mu|_{TWS}$, $\left.\frac{du}{ds}\right|_{\alpha=0}$ = DUDSAO, HDHS90 = $\left.\frac{H_D}{H_s}\right|_{\theta_w=90}$

$$QT_s|_{\alpha=0} = QT\,(ISØNW)|_{\alpha=0} \qquad 2012$$

$$QRS|_{\alpha=0} = QRADNM = QRAD(1)|_{\alpha=0} \qquad 2014$$

$$\frac{du_l}{ds} = DUDSD = \frac{1}{2}\,DUDSW + \frac{1}{2}\,DUDSL\,, \qquad 1020$$

$$\left.\frac{du}{ds}\right|_s = DUDSD = \frac{\overline{du}}{ds} \quad \text{if} \quad \begin{matrix} \alpha - 90 - \theta_N < 0 \quad \text{and} \\ 180 + \theta_A - \alpha < 0 \end{matrix} \qquad 1020$$

$$\left.\frac{du}{ds}\right|_s = \frac{1}{2}\,\frac{\overline{du}}{ds} + \frac{0.5\,\sin\alpha}{YIW(1)}\left(\frac{3}{RSØRA}\right)^{1/2}, \quad \alpha \text{ otherwise than above} \qquad 1021$$

YIW(1) is $\alpha = 0$ value of y_o for the stag. pt. at the current α

2. PREP

$$P_e/P_s = PRE(I) = \sin^2(\theta_b)$$

$$\frac{dP_e/P_s}{dS} = DPØDS(I) = PWS \cdot \sin(2\theta_b)\,\frac{d\theta_b}{dS_b} \quad \text{Newtonian, } S_b \le S_b^* \qquad 1003$$

$$C_1 = CØED1 = \frac{RHØA\;V^2}{2\,PWS}\;RSØRA \cdot S_b^*\left(\frac{DUDS}{V}\right)^2$$

$$C_2 = CØED2 = \sin^2(\theta_b^*) - 1 + CØED1$$

$$\frac{P_e}{P_s} = PRE(I) = 1 - CØED1 \cdot \left(\frac{S_b}{S_b^*}\right)^2 + CØED2 \cdot \left(\frac{S_b}{S_b^*}\right)^4 \quad \text{Polynomial, } S_b \le S_b^*$$

$$\frac{d(P_e/P_s)}{dS} = DPØDS(I) = -2 \cdot CØED1 \cdot PWS\;\frac{S_b}{S_b^{*2}} \qquad 1026$$

$$+ 4 \cdot CØED2 \cdot PWS \cdot \frac{S_b^3}{S_b^{*4}}$$

$$P_e/P_s = PRE(I) = \sin^2(\theta_b) + PA\emptyset PS \cdot \cos^2(\theta_b)$$

Newtonian, $S_b > S_b^*$

$$\frac{d(P_e/P_s)}{dS} = DP\emptyset DS(I) = PWS \cdot \sin(2\theta_b)\frac{d\theta_b}{dS_b}$$

The entropy-layer pressure formulation is done by integrating a differential equation, Statement 3003. See DEREQB and GETB significant equations.

The Prandtl-Meyer pressures are obtained by two dimensional table look ups (GETNU and GETPRE subroutines) and the logic between Statements 1042 and 1066.

3. QC$\emptyset$NV

$$QL_1 = QLW(I) = YBW^{JFL\emptyset W} \cdot R\emptyset B \cdot UED \cdot [(1. + 0.096\sqrt{BETA}) / \sqrt{2 \cdot XSI}] \frac{QLSW}{QLSAO}$$

$$\cdot \frac{XMUBBB}{(RH\emptyset BS \cdot XMUBBB \cdot DUDSW \cdot (JFL\emptyset W + 1))^{1/2} \cdot 1.068} \qquad 1002$$

$$\rho_B = R\emptyset B = PREW(I) \cdot \frac{XMAMB \cdot PWS}{89516 \cdot TB}$$

$$U_e = UED = DUDSW \cdot SBW(I), \qquad S_b < S_1 \qquad 1000$$

$$= \left(1. - PREW(I)\frac{GAME - 1}{GAME}\right)\sqrt{2 \cdot HAMB}, \quad S_b > S_1 . \qquad 1001$$

$$\beta = BETA = 0.5, \qquad S_b < S_1 \qquad 1000$$

$$\beta = -\frac{2}{XMUBBB} \cdot \frac{DPDSW(I) \cdot XSI}{R\emptyset E \cdot UED^3 \cdot R\emptyset B \cdot Y_b^{2JFL\emptyset W}}, \quad S_b > S_1, \quad \frac{d(P_e/P_s)}{dS} < 0 \qquad 1004$$

$$= 0 \qquad S_b > S_1, \quad \frac{d(P_e/P_s)}{dS} \geq 0 \qquad 1003$$

$$\xi = XSI = RH\emptyset BS \cdot XMUBBB \cdot DUDSW \cdot \frac{1}{2JFL\emptyset W + 2}, \quad S_b \leq S_1 \qquad 1000$$

$$= XSISUB + XMUBBB \cdot \int_{S_1}^{S_b} R\emptyset B \cdot UED \cdot Y_b^{2JFL\emptyset W}\, dS \qquad 1001$$

where

S_1 = S_b evaluated at second output point

XSISUB = ξ evaluated at largest SBW(I) < S_2

ρ_e = RØE = RHØT PREW(I)$^{1/GAME}$

REY_1 = REW(I) = RØE UED SBW(I)/(XMUE · RYNØRM)

$$XMUE = \mu_{TE},\ TE = TT \cdot \left(PREW(I)^{\frac{GAME-1}{GAME}}\right)$$

$$QT_i = QTW(I) = 0.0296 \left(\frac{2^{0\,2}(JFL\emptyset W)}{SIGMA^{2/3}}\right) \cdot RSRE^{0.8} \cdot \left(\frac{XMUST}{XMUE}\right)^{0.2} REY^{0.2}$$

$$\cdot\ R\emptyset E * UED \cdot \frac{HAMB}{(1556 + QTSTAD)} \qquad 1006$$

$$RSRE = TE/TSTR$$

$$TSTR = TE \left[1 + \frac{1}{2}\left(\frac{TB}{TE} - 1\right) + 0.22 \cdot SIGMA^{1/3} \left(\frac{TT}{TE} - 1\right)\right]$$

4. WIND

y_b = YBW(I) = $(y_{o_1} - YBRAL) \cdot \cos(a) + (x_{o_1} - XBRA2) \cdot \sin(a)$, $x_{o_1} < x_{o_{largest}}$

= $(-y_{o_1} - YBRAL) \cdot \cos(a) + (x_{o_1} - XBRAL) \cdot \sin(a)$, after $x_{o_1} = x_{o_{largest}}$

x_b = XBW(I) = $(x_{o_1} - XBRAL) \cdot \cos(a) - (y_{o_1} - YBRAL) \cdot \sin(a)$, $x_{o_1} < x_{o_{largest}}$

= $(x_{o_1} - XBRAL) \cdot \cos(a) - (-y_{o_1} - YBRAL) \cdot \sin(a)$, after $x_{o_1} = x_{o_{largest}}$

XBRAL, YBRAL, SBRAL = values of x_o, y_o, and S_o for stagnation point of current a, in zero angle of attack system.

θ_b = THETBW(I) = $\theta_{o_i} + \alpha$ $\quad x_{o_i} < x_{o_{largest}}$

= $\alpha - \theta_{o_i} - 180$, after $x_{o_i} = x_{o_{largest}}$

S_b = SBW(I) = S_{o_i} − SBRAL $\quad x_o < x_{o_{largest}}$

= $2\,S_{o_{largest}}$ − SBRAL − S_{o_i} after $x_{o_i} = x_{o_{largest}}$

5. LEE

y_b = YBL(I) = $(y_{o_i}$ − YBRAL) $\cos(\alpha) + (x_{o_i}$ − XBRAL)$\cdot \sin(\alpha)$, $\quad x_{o_i} > 0$

= $(-y_{o_i}$ − YBRAL)$\cdot \cos(\alpha) + (x_{o_i}$ − XBRAL) $\sin(\alpha)$ after $x_{o_i} = 0$

x_b = XBL(I) = $(x_{o_i}$ − XBRAL)$\cdot \cos(\alpha) - (y_{o_i}$ − YBRAL)$\cdot \sin(\alpha)$ $\quad x_{o_i} > 0$

= $(x_{o_i}$ − XBRAL)$\cdot \cos(\alpha) - (-y_{o_i}$ − YBRAL)$\cdot \sin(\alpha)$ after $x_{o_i} = 0$

θ_b = THETBL(I) = $180 \cdot -\theta_{o_i} - \alpha$ $\quad x_{o_i} > 0$

= $\theta_{o_i} - \alpha$ after $x_{o_i} = 0$

S_b = SBL(I) = SBRAL − S_{o_i} $\quad x_{o_i} > 0$

= SBRAL + S_{o_i} after $x_{o_i} = 0$

6. GETDS

DELS = RAØRS · EF

$$EF = ACØSH \frac{1}{\sqrt{3\ RAØRS}} - DTDSMP \cdot \frac{1}{\sqrt{1-3\ \ RAØRS}} \qquad 1007$$

if $\frac{d\theta_b}{dS_b} < 0$, $0 \le S_b \le S_b^*$, and JFLOW ≤ 0

548<

$$\text{DTDSMP} = 1/\left.\frac{d\theta_b}{ds_b}\right|_{\text{current stag point}}$$

IF $\dfrac{d\theta_b}{ds_b} = 0,\ 0 \le S_b \le S_b^*$, and JFLØW < 0, the equation is the same but

$$= -\text{RN} \text{ if } \alpha = 0, \qquad 1025$$

$$\text{DTDSMP} = -\frac{\text{YIW}(1)}{\sin(\alpha)} \text{ if } \alpha \neq 0, \qquad 1026$$

where YIW (1) is the y coordinate of the stagnation point for the current α in the zero angle of attack system

$$\text{DTDSMP} = 1/\left.\frac{d\theta_b}{dS_b}\right|_{\text{current stag point}} \text{ if } \left.\frac{d\theta_b}{dS_b}\right|_{\text{current stag point}} \neq 0 \qquad 1036$$

If JFLØW > 0, DELS is computed from a two dimensional table look up (1009 to 1018) for $\dfrac{\Delta s}{Y_T}(\epsilon, \rho_A/\rho_s)$, where Y_T and ϵ are either referenced to the sonic point (1008) or the beginning of a straight section if there is such a section in $0 \le S_b \le S_b^*$ (1028 to 1031, if $X_b^* \ge \Delta_{so}$. If $X_b^* < \Delta_{so}$, DELS = $\Delta_{so} - X_b^*$ at 1037.

7. GETQRS

If $\theta_w = 90$, ξ = STAND (I) =

$$\text{XBW (I)} - \left\{\frac{-\text{RW} + \text{SQRTF}\,(\text{RW}^2 + \text{BSHØCK YBW (I)}^2}{\text{BSHØCK}} - \text{DELS}\right\} \qquad 1036$$

If $\theta_w \neq 90$, compute Y_w = YW = pos root of the quadratic given by

$$A = 1 - \text{BSHØCK TANN}^2$$

$$B = 2\,\text{RW} \cdot \text{TANN} + 2\ \text{BSHØCK DM TANN} + 2 \cdot \text{BSHØCK YBW (I) TANN}^2$$

$$C = 2\,\text{RW}\ \{\text{DM} + \text{YBW (I)} \cdot \text{TANN}\} - \text{BSHØCK} \cdot \text{DM}^2 - \text{BSHØCK YBW (I)}^2\ \text{TANN}^2$$

$$- 2 \cdot \text{BSHØCK} \cdot \text{DM YBW (I)} \cdot \text{TANN}$$

where,

$$TANN = \tan(\theta_{w_1}),\ DM = XBW(I) - DELS \qquad 1040\text{-}1003$$

$$SSS = STAND(I) = \frac{[YW - YBW(I)]}{\cos(THWT)} \quad \text{if } BSH\emptyset CK \leq 0 \qquad 1025$$

$$SSS = STAND(I) = \frac{AINT + ARGUI \cdot DM - YBW(I)}{\cos(THWT) + ARGUI \cdot \sin(THWT)} \quad \text{if } BSH\emptyset CK > 0$$

where,

$$AINT = YBW(I-1) + STAND(I-1) \cdot \cos(THETBW(I-1) - ARGUI[XBW(I-1) - STAND(I-1) \cdot \sin(THET\ BW(I-1) + DELS]$$

$$ARGUI = SQRTF(BSH\emptyset CK)$$

$$\theta_w = THWW = \tan^{-1}\frac{2 \cdot RW + 2 \cdot BSH\emptyset CK \cdot [DM - (YW - YBW(I)) \cdot TANN}{2 \cdot YW}$$

$$P = PARG = PREW(I) \cdot \frac{PWS}{2116} \cdot$$

$$QRAD_1 = QRAD(I) = \frac{1}{2}\ STAND(I)\ \frac{XMMX}{XMMX+1} \cdot XINB + \frac{1}{XMMX} \cdot XINW$$

$$XINB = table(1,12) \mid \theta_w = THT,\ XINW = table(1,13) \mid p = PARG,$$

independent variable tables being TABLE (1, 1) and (1, 7), respectively.

8. STAGPT

$XBRAL = YBR \cdot \sin(\alpha) - XBR \cdot \cos(\alpha)$, 1027

XBR, YBR are x and y co-ordinates in the zero angle of attack system of a point where $\theta_b + \alpha = 90$. The stagnation point is that which maximizes XBRAL, and the candidates are found by the IF LØØP from 1030 to 1008.

9. GETB

$$BB = (GAMS - 1) \cdot (PRCØN)\frac{(I - GAMS)}{GAMS} \cdot XINT$$

$$PRCØN = \frac{P_e}{P_s} \quad \text{at start of straight section}$$

$$XINT = \int_o^{y_{ss}} PRE\ dy_b\ ,\ y_{ss} = y_b \text{ at start of straight section, } JFLØW \leq 0$$

$$XINT = \int_o^{y_{ss}} PRE \cdot y_b\ dy_b\ ,\ JFLOW > 0.$$

10. FINDRW

ξ_2 = XSI2 = largest root of $C_1 \xi^2 + C_2\ \xi + \phi = 0$, If J FLØW > 0 1014

where

$$C_1 = 2 \cdot TBR\left[.5 \cdot REØRA \cdot UEØV + \frac{1}{XNNX + 2} \cdot TERM\right] - 2 \cdot YB \cdot TBR$$

TBR = cos (TB), TB = θ_b = body angle

$$\rho_e/\rho_a = REØRA = RSØRA \cdot PREW\ (I)\left(\frac{1}{GAMS}\right)$$

$$U_e/V = \left\{\frac{2 \cdot HAMB}{V^2}\left[1 - PREW\ (I)\frac{(GAMS - 1)}{GAMS}\right]\right\}^{1/2}$$

TERM = RURV · CØSF (TWL − TB) − REØRA · UEØV

TWL and RURV = θ_{wL} and ρ_U/ρ_{aV} evaluated from oblique data at θ_w = THET

YB = body y

$$\xi_2 = \text{XSI2} = (\text{If J FL}\phi\text{W} \leq 0)\ \text{YB}/\left[\text{RE}\phi\text{RA} \cdot \text{UE}\phi\text{V} + \frac{1}{\text{XNNX} + 1} \quad \text{TERM} - \text{TBR}\right]$$

For the forward point, (ICϕMP = 0)

$$\frac{\xi_1 = \text{XSI1} = [(\text{XB} + \text{DELS})\cos(\text{THETR}) - \text{YB} \cdot (1 - \sin(\text{THETR}))]}{\text{TBR} - \sin(\text{THET} - \text{TB})} \qquad 1071$$

where

THETR = θ_w of iteration, XB = body X - coordinate, DELS = detachment distance

$$\text{RW} = [\text{XSI2} \cdot \text{TBR} + \text{YB}] / \cos(\text{THETAW}),\ \text{THETAW} = \text{converged } \theta_w \qquad 1066$$

For the most forward point with $\theta_b \leq 0$ (ICϕMP = 1)

ξ_1 = XSI1 = largest root of $A\xi^2 + B\xi + C$

A = 1/(XB + DELS)

B = 2 · YB · A − tan (THETR)

$C = \text{YB}^2 \cdot \text{A} - \text{RW} - \text{YB} \cdot \tan(\text{THETR})$

BSHϕCK = [(YB + XSI2) · TANTR − RW]/(XB + DELS), TANTR = tan (THETR),

THETR = converged θ_w .

11. ACϕSH

$$\text{ACOSH}(\text{ARG}) = ln\ (2 \cdot \text{ARG}) - \frac{1}{2} \cdot \frac{1}{2\,\text{ARG}^2} - \frac{1}{2} \cdot \frac{3}{4} \cdot \frac{1}{4\,\text{ARG}^4} - \cdots$$

12. DERQ5

$$\frac{d(P_e/P_S)}{dx} = \tan\theta_b - \sqrt{\frac{P_e/P_S - P_A/P_S}{1 - P_e/P_S - P_A/P_S}}\ , \qquad 1006$$

P_A/P_S = PAØPS P_e/P_S = XEQ(1)

JFLØW > 0.

$$\frac{d(P_e/P_S)}{dx} = \frac{GAMS}{BB} \cdot \left(\frac{P_e}{P_S}\right)^{\frac{GAMS+1}{GAMS}} \cdot XTERM$$

$$XTERM = y_{ss} \cdot \tan\theta_b + \tan^2\theta_b\,(x - x_{ss}) - \sqrt{ARG}$$

$$ARG = \left[\frac{P_e/P_S - P_A/P_S}{1 - P_e/P_S - P_A/P_S}\right]\left[2 \cdot BB \cdot \left(\frac{P_e}{P_S}\right)^{-\frac{1}{GAMS}} + (y_{ss} + \tan\theta_b\,(x - x_{ss}))^2\right]$$

x_{ss}, y_{ss}, θ_b : x_b, y_b, θ_b at start of straight section, x = independent variable.

13. SUB110

The zero angle of attack co-ordinate equations are obvious by inspection, and have been documented in Program 1882.

V. REFERENCES

1. Properties of Argon - Free Air, Report No. GM-TM-76, The Ramo-Wooldridge Corp. (October 1956).

2. Vinokur, M. Hypersonic Flow Around Bodies of Revolution Whose Shock Waves are Generated by Conic Sections, LMSD, TR-LMSD-288139 General Research in Flight Sciences, I, Part 1, Fluid Mechanics (January 1959 to 1960).

3. Kaattari, G. F., Shock Envelopes of Blunt Bodies at Large Angles of Attack, NASA TND-1980 (December 1963).

4. Hayes, W. D., and R. F. Probstein, Hypersonic Flow Theory, Academic Press, N. Y. p. 160 (1959).

5. RAD, Mars-Venus Capsule Parameter Study Vol. I. Introduction and Analysis, Avco/RAD TR 64-1, JPL Contract No. JPL-950626 (21 March 1964).

6. Salathe, E. P., Entropy-Layer Theory For Pressure Distributions in Hypersonic Flow, Avco/RAD TM-62-79 (1962).

7. Wang, C. J., J. B. Peterson, and R. Anderson, Gas Flow Tables, Space Technology Laboratories, GM-TR-154 (14 March 1957).

8. Lees, L. and T. Kubota, Inviscid Hypersonic Flow Over Blunt Nosed Slender Bodies JAS Vol. 24, No. 3, p. 195 (March 1957).

9. Ferri, A., The Influence of the Shock Curvature on the Behaviour of Hypersonic Boundary Layer, PIBAL Report No. 542, AD No. 236242 (February 1960).

10. Kemp, N. H., P. H. Rose, and R. W. Detra, Laminar Heat Transfer Around Blunt Bodies in Dissociated Air, JAS 26, No. 7 pp. 421-430 (July 1959).

11. Reshotko, E., Heat Transfer to a General Three Dimensional Stagnation Point, Jet Propulsion Labs., pp. 58 to 59 (January 1958).

12. Rose, P., R. F. Probstein, and M. C. Adams, Turbulent Heat Transfer Through A Highly Cooled Partially Dissociated Boundary Layer, JAS Vol. 25, No. 12 (December 1958).

13. Larson, H. K., Heat Transfer in Separated Flows, JAS pp. 731 to 738, 26, No. 11 (November 1959).

14. Chapman, D. R., A Theoretical Analysis of Heat Transfer in Regions of Separated Flow, NACA TN 37 2 (October 1956).

15. Berman, R. J., Bow Shock Shape About a Spherical Nose, AIAA 3, No. 4, pp. 778 to 780 (April 1965).

16. Seiff, A., and E. E. Whiting, Calculation of Flow Fields From Bow-Wave Profiles for the Downstream Region of Blunt-Nosed Circular Cylinders in Axial Hypersonic Flight, NASA TND-1147, (November 1961).

17. Terry, J. E. and C. S. James, Parametric Study of Hypersonic Flow Fields About Blunt-Nosed Cylinders at Zero Angle of Attack, NASA TND-2342 (July 1964).

18. Lomáx, H. and M. Inouye, Numerical Analysis of Flow Properties About Blunt Bodies Moving at Supersonic Speeds in an Equilibrium Gas, NASA TN TR R-204, Washington, D.C. (July 1964).

19. Inouye, M., J. V. Rakich, and H. Lomax, A Description of Numerical Methods and Computer Programs for Two-Dimensional and Axisymmetric Supersonic Flow Over Blunt-Nosed and Flared Bodies, NASA TN-D-2970, Washington, D. C. (August 1965).

PROGRAM 1886

PRELIMINARY STRUCTURES WEIGHT PROGRAM (1886)

CONTENTS

I. Introduction 1

A. General Description 1
B. Calculation Model 1
C. Limitations 11

II. Usage 12

A. Input Definitions 12
B. Input Procedures 17
C. Output Definitions 21
D. Sample Problem 22

III. Computations 55

A. Block Diagram 55
B. Symbols 56
C. Equations 58

IV. IBM Routines 70

A. Program Flow 70
B. Main Program 71
C. Subroutines 73
D. Significant Equations 77

V. References 106

ILLUSTRATIONS

Figure	1	Experimental Buckling of Spherical Shells	3
	2	Spherical Cap Geometry	4
	3	Conical Sandwich Shell Geometry	5
	4	Ring Stiffened Cone Geometry	7
	5	Vehicle Shape Parameters	9
	6	Tension Shell and General Shape Geometries	10
	7	Block Diagram for Program 1886	55
	8	Flow Diagram for Program 1886	70

TABLES

Table	I	Evaluation of the Constants T_1, T_3, T_4 as a Function of the Geometric Parameter β	61

I. INTRODUCTION

A. GENERAL DESCRIPTION

The purpose of this program is to determine the unit area structural weight requirements for shells to resist the critical aerodynamic loads incurred during entry. The general inputs include:

1. The aerodynamic load in terms of the peak pressure which may occur on each section of the vehicle.

2. The mechanical properties of the material, including modulus of elasticity, yield stress, Poisson's ratio, and density.

3. Geometric parameters describing the size and shape of the elemental sections, including spherical caps, conical frustra, cylinders, and the tension shell.

4. The following types of construction can be handled by the program:

   a. Cylinders and conical frustra-honeycomb or ring stiffened.

   b. Spherical caps--honeycomb or monocoque

   c. Tension shell--monocoque

5. The program treats the case of a hot structure, using the thin skin assumption, for which the convective and radiative heating tables and a stagnation enthalpy table are required as input. Additional material properties must be specified for this case, including the specific heat, and emissivity. The variation of material properties with temperature is handled by input values. The program will obtain the unit area weight necessary to resist the combined aerodynamic and thermal loads.

6. The design criteria utilized include buckling and/or yield stress criteria, and allowable temperature rise.

B. CALCULATION MODEL

1. Honeycomb Sandwich

The calculation model for the honeycomb analysis is described in detail in Reference 1, and hence only a brief summary is given here. The analyses considered five modes of failure: (1) general instability; (2) yielding of face sheets, (3) core crushing; (4) dimpling of face sheets; and (5) wrinkling.

Since little test data and theoretical analysis are available on the buckling of sandwich spherical caps, derivation of the general instability criteria was limited to transformation of isotropic buckling data [2-4] to sandwich shells; the data was correlated as shown in Figure 1. Transformation of these data employed the use of equivalent bending and extensional rigidity moduli for sandwich shells. The equivalent extensional (B) and bending (D) rigidities have the form:

$$B = \frac{2 E_f t_f}{(1 - \nu_f^2)}$$

$$D = \frac{E_f t_f t_c^2}{2 (1 - \nu_f^2)}$$

where E_f, ν_f, and t_f are the modulus of elasticity, Poisson ratio and thickness of the face sheets and t_c is the core height. The experimental data for the buckling of homogeneous spherical shells was taken from References 2, 3, and 4. The spherical cap geometry is depicted in Figure 2.

The conical and cylindrical sandwich analyses were based on the approach of Reference 5 utilizing the equivalent rigidities discussed above. The conical shell geometry used is depicted in Figure 3.

The honeycomb calculated provides an optimum face sheet, and core height to resist buckling with minimum weight. The optimum values to prevent buckling are compared with those required for the yield or minimum gauge criteria, then the honeycomb sandwich is re-analyzed with the heavier face sheets and the results given for the core height and total unit weight.

The calculation model allows for the combined interaction of lateral pressure and axial loads. The effects of body forces due to the deceleration experienced during entry, for example, are also included in the calculation model. The body forces due to the heat shield are included. The inclusion of the body forces results in an iterative solution as the effect depends on the structural weight which is, of course, unknown initially. Besides the buckling criteria of Reference 5, the meridional (σ_ξ) and circumferential (σ_θ) stresses are incorporated into an elastic yield criteria, wherein the allowable stress is given by

$$\sigma_y = \sqrt{\sigma_\theta^2 + \sigma_\xi^2 - \sigma_\theta \sigma_\xi} \quad .$$

In the case of forward facing cones, it is possible that the maximum stress will not be at the base of the cone due to the body forces; hence, the resultant stress (σ_y) is tested over the whole length of the cone to ascertain its maximum value.

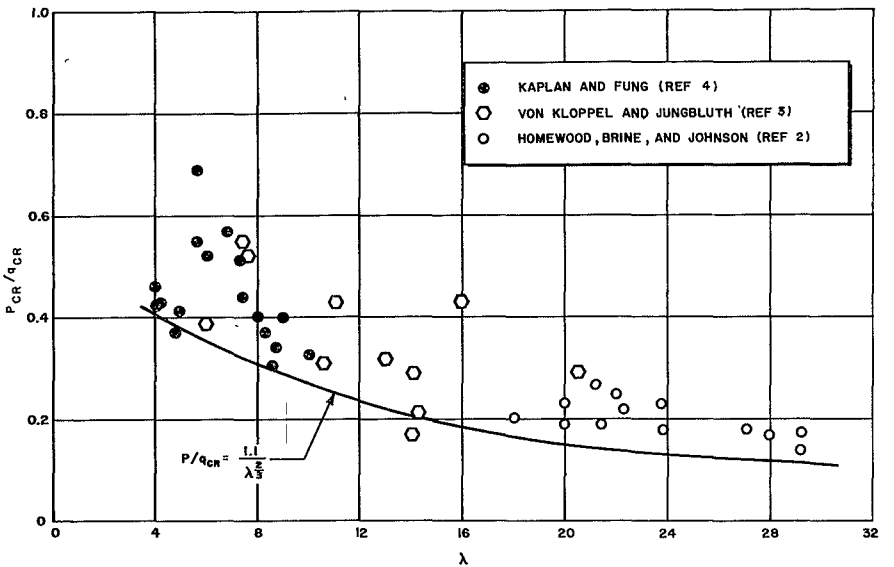

64-234

Figure 1 EXPERIMENTAL BUCKLING OF SPHERICAL SHELLS

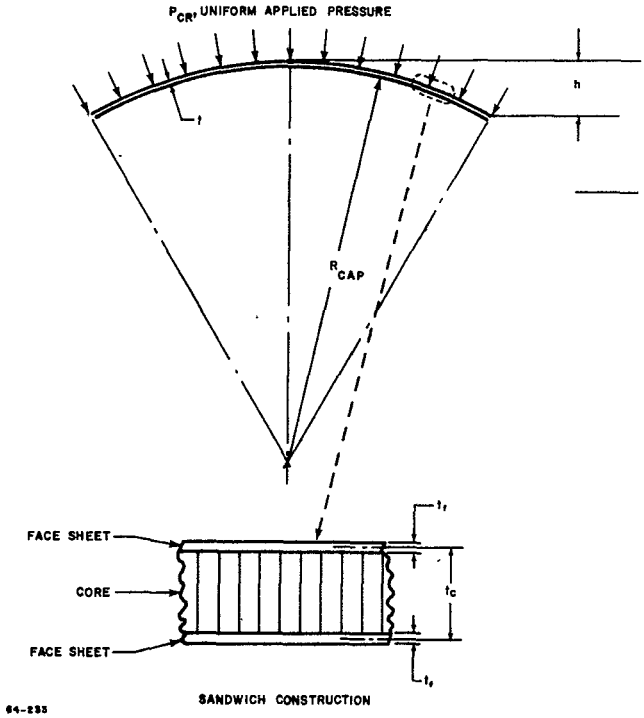

Figure 2 SPHERICAL CAP GEOMETRY

562<

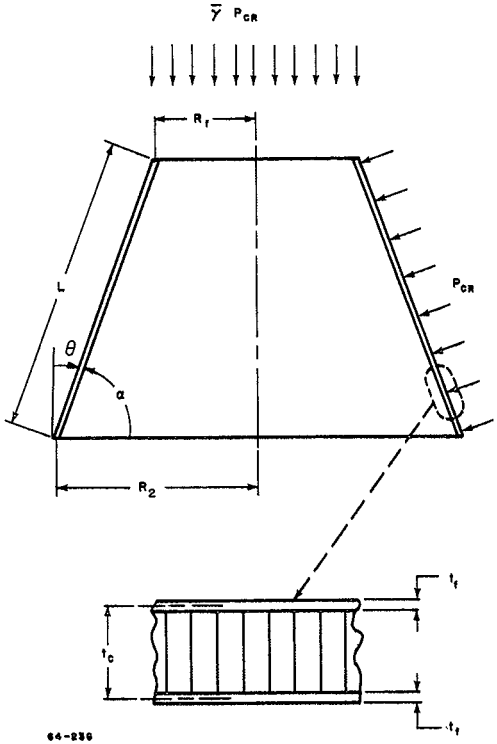

Figure 3 CONICAL SANDWICH SHELL GEOMETRY

2. Ring-Stiffened

The calculation model for the ring-stiffened analysis is that suggested in Reference 5. The method of solution is based on an application of the principle of minimum potential energy of an equivalent orthotropic shell, utilizing a set of displacement relationships to describe the deflected shape.[5] The range of application of shell geometries is approximately given by,

$$10^2 < 2\left(\frac{L}{R_2}\right)^2 \frac{\cos\theta}{\left(1 + \frac{R_1}{R_2}\right)} \frac{R_2}{t} < 10^4$$

where (L) is the slant length, (R_1) and (R_2) are the minimum and maximum radii, (t) is the shell thickness, and (θ) is the cone angle of the shell section.

A particular stiffener geometry, that of a (Z) section as shown in Figure 4, is fixed in the program. The effective width of the stiffener is controlled by input, as well as the proportions of the stiffener.

The solution is programmed so as to satisfy local and overall stability and to solve for the number of rings which minimize the total shell weight. Tests are provided to ensure minimum gauge and yeild criteria are satisfied.

The program provides for the option of either specifying the stiffener height and satisfying both local (inter-bay) and general stability, which in general will require different shell thicknesses or the program can solve for the stiffener height which yields equal shell thickness requirements for local and general stability. The calculation model assumes that the stiffeners have the same thickness as the shell. The spacing between stiffeners is limited to a value not smaller than the effective width.

The calculation model provides for lateral pressure and axial loads as well as for body forces. The body forces include those due to the structure as well as those arising due to a heat shield attached to the structure. The inclusion of the body forces results in an iterative solution as the body force depends on the structural weight which is unknown initially.

The method of solution starts by considering a shell without rings and satisfying the buckling, yield stress and minimumum gage limitations. If the minimum gage and/or yield stress limits are not excluded then rings are added in a sequence controlled by input, i.e., rings may be added one at a time or in a progressive manner given by the expression

$$N_K = N_J\,(NFAC) + NTERM$$

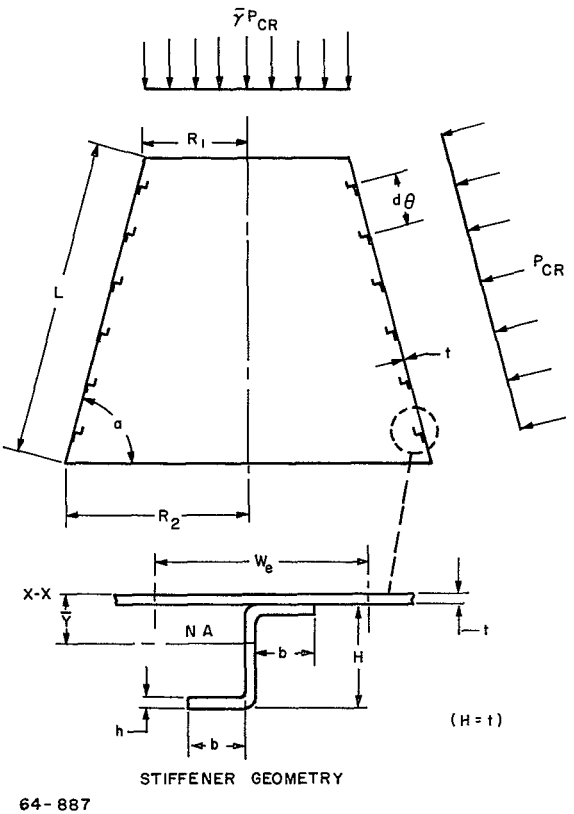

Figure 4 RING STIFFENED CONE GEOMETRY

where NFAC and NTERM are program input integers. Each ring configuration solution is tested against the limits on minimum gage and/or yield stress and if either of these two conditions are excluded, the calculation stops, with the last weight being evaluated on the largest of the thickness requirements.

The yield stress criteria is based on the combined criteria wherein the maximum stress is given by

$$\sigma_y = \sqrt{\sigma_\xi^2 + \sigma_\theta^2 - \sigma_\theta \sigma_\xi} \quad .$$

In the case of forward facing cones, it is possible that the maximum stress will not be at the base of the cone due to the body forces, hence, the resultant stress (σ_y) is tested over the whole length of the cone to ascertain its maximum value.

3. Tension Shell

The calculation model for the tension shell utilizes the membrane equations to determine the stress distribution in the shell, as done in Reference 6. The calculation model assumes that the vehicle mass all exists forward of the tension shell. Two options are provided, one being the case of a Newtonian pressure distribution and zero hoop stress and the second being the more general case wherein the coordinates are input, and the hoop tension is taken as a fraction of the meridional tension, i.e., $N_\theta = aN_\phi$.

Along with the tension shell analysis, the compression ring weight is evaluated using the criteria of lateral stability as derived in Reference 7, and that of buckling of a long cylinder in compression as suggested in Reference 8. A circular cross section is used to estimate the compression ring weight.

4. Monocoque

An option is provided to compute the weight of spherical caps of monocoque construction. The approach is empirical, utilizing the buckling data correlated in Figure 1 and the shell model in Figure 2. General instability and yielding modes of failure are considered, and the resulting shell thickness is compared with practical minimum gage limitations.

5. Geometry

The overall vehicle geometry for which the program is intended is shown in Figures 5 and 6. The toroidal sections defined by RSN, RSC, and RSB cannot be handled with the program; however, these parameters are required as input to define the fore and aft radii of each conical section. The tension shell geometry considered is shown in Figure 6 wherein the tension shell replaces Section 23, as shown in Figure 5.

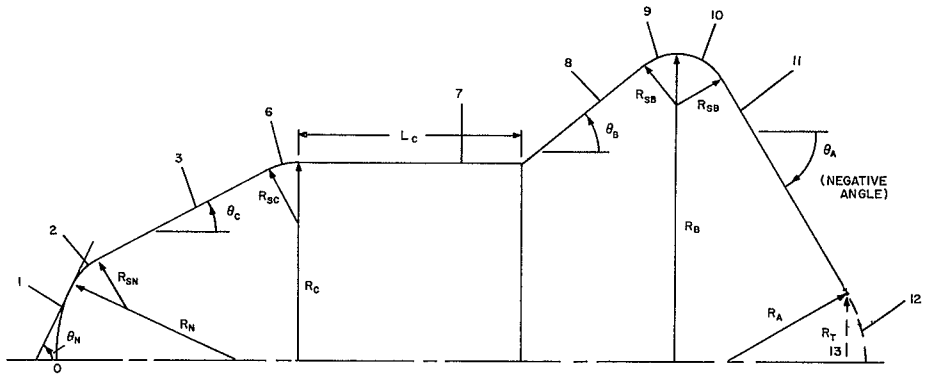

SECTION

1 NOSE SPHERE
2 R_{SN} TORUS
3 CONE (SEE FIGURE 6 FOR ADDITIONAL OPTIONS)
6 R_{SC} TORUS
7 CYLINDER
8 FLARE
9 FORE R_{SB} TORUS
10 AFT R_{SB} TORUS
11 AFT CONE
12 AFT SPHERE (R_A)
13 BASE (R_T)

65-11627

Figure 5 VEHICLE SHAPE PARAMETERS

567<

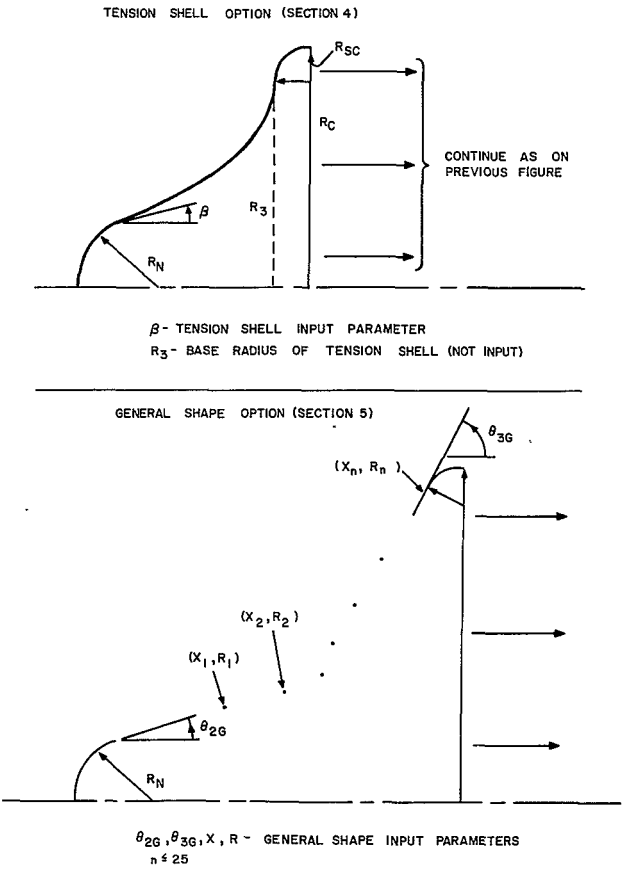

Figure 6 TENSION SHELL AND GENERAL SHAPE PARAMETERS

6. Body Forces

The calculation model provides for the inclusion of body forces resulting from the structure and the heat shield during entry.

The formulation of the sandwich buckling analysis for cones can handle a limited range of body forces when the body forces cause a tensile stress. The limitations are due to the fact that K_1 and K_2 must be greater than zero as the equations are formulated. The limits take the form

$$\frac{(WHS + W)G}{144\, P_{CR} \sin\theta} < 1 + \frac{\bar{\gamma}(1 - \beta)^2}{\beta(1 - \beta + \beta/3 + \beta/2\pi)^2} \cdot$$

$$\frac{(WHS + W)G \sin\theta}{144\, P_{CR}} < 1$$

In general, these limits are automatically fulfilled for entry vehicles where the fore body pressures are sufficiently large to decelerate the payload internal structure and afterbody as well as the heat shield and structure of the forebody.

7. Hot Structures

The option to compute the temperature rise for a specified heat pulse is contained within the program. Both the convective and radiation heat pulses may be input. Provision is made to account for the hot wall reduction on the convective heating and for reradiation. The structure is assumed to be at a uniform temperature equal to the surface temperature. In the event the structure temperature rise exceeds the allowable input value, the structural weight is increased. The material properties are treated as a function of temperature.

C. LIMITATIONS

The following basic limitations exist in the program:

1. The effects of bending and edge conditions are not treated.

2. The sandwich core is assumed rigid so that transverse shear deformation has a negligible influence on the buckling load; consequently the results would not be valid for a weak core.

3. The sandwich construction must have equal face sheet thicknesses.

4. Axisymmetric loading is assumed.

II. USAGE

A. INPUT DEFINITIONS

Name	Preset Values	Symbol	Parameter	Units
A	0.	a	Ratio of Circumferential to meridional stress for tension shell.	--
BETA	0.	β	Leading edge angle for tension shell.	degrees
CASE	0.		Identification number of the form XX.XX.	
CBAR	1.		An empirical factor which modifies the value of used in the calculation model for combined loadings.	
CPTAB	0.	C_p	Specific heat table.	Btu/lb-°F
DATE	4.01		Identification number of the form XX.XX.	--
DELKI	0.		Additive term in calculation of K_1.	$in.^3$
DELK2	0.		Additive term in calculation of K_2.	inches
DELTAU	0.1		Time increment used for integration of temperature rise equation.	seconds
DTHDY	0.	$d\theta/dY$	Derivative of body angle with radial coordinates for general shape.	rad/ft
EF	0.	E_f	Modulus of elasticity for honeycomb face sheets and monocoque skin.	$lb/in.^2$
EFTAB	0.	E_f	Face sheet modulus table.	$lb/in.^2$

570<

Name	Preset Values	Symbol	Parameter	Units
EM	0.	m	Effective width factor.	--
EN	0.	n	Stiffener proportionality factor.	--
EMISTR	0.	ϵ	Emissivity of structure.	--
EPS	0.01		Thickness iteration factor.	
ER	0.	E_R	Modulus of elasticity for compression ring.	lb/in.^{2}
GAMF	0.	ν_f	Poisson ratio for honeycomb face sheets and monocoque skin.	--
G	0.		Deceleration.	Earth g
GAMR	0.	ν_R	Poisson's ratio for core ribbon.	--
GAMBAR	0.	$\bar{\gamma}$	Axial load factor.	--
GFTAB	0.	ν_f	Face sheet Poisson's ratio table.	--
GRTAB	0.	ν_r	Ribbon Poisson's ratio table.	--
HS	0.	H	Height of stiffener.	inches
HTBL	0.	HM/RT_o	Stagnation enthalpy table.	--
HTST	0.		Hot-structure option sentinel.	--
HTϕP	1.		Stiffener optimization sentinel.	--
KADHES	0.	K	Honeycomb adhesive weight.	lb/ft^2
LC	0.	LC	Cylinder length.	feet

Name	Preset Values	Symbol	Parameter	Units
MEMØ	0.		Identification number of of the form XX.XX.	--
MØN	0.		Monocoque option sentinel.	--
NFAC	2.		Constants which specify ring frequency.	--
NTERM	0.		($N_K = N_j$ NFAC + NTERM)	--
PCR	0.	P_{CR}	Aerodynamic pressure.	lb/in.^{2}
QCMULT	0.		Convective heat pulse multiplier.	--
QRMULT	0.		Radiative heat pulse multiplier.	--
QTBL	0.	q_c	Convective heating table.	Btu/ft^{2}sec
RA	0.	R_A	Aft Cap radius.	feet
RB	0.	R_B	Base radius.	feet
RC	0.	R_C	Cylinder radius.	feet
RN	0.	R_N	Nose Cap radius.	feet
RØCMAX	0.	ρ_{max}	Maximum core density.	lb/ft^3
RØCMIN	0.	ρ_{min}	Minimum core density.	lb/ft^3
RØF	0.	ρ_f	Density of honeycomb face sheet and monocoque skin.	lb/ft^3
RØR	0.	ρ_R	Density of core ribbon.	lb/ft^3
RØRG	0.	ρ_g	Density of compression ring skin.	lb/ft^3
RSB	0.		Shoulder radius.	--

5724

Name	Preset Values	Symbol	Parameter	Units
RSC	0.	R_{SC}	Shoulder radius.	feet
RSD	0.		Ring-stiffened option sentinel.	--
RSN	0.	R_{SN}	Shoulder radius	feet
RT	0.	R_T	Truncation radius at base.	feet
RTBL	0.		Radiative heating table.	Btu/ft^2sec
SECTN	0.		Ordered array of section numbers.	
SGFTAB	0.	σ_f	Face-sheet yield stress table.	$lbs/in.^2$
SGRTAB	0.	σ_r	Ribbon yield stress table.	$lb/in.^2$
SIGCYF	0.	σ_f	Yield stress of honeycomb face sheet.	$lb/in.^2$
SIGCYR	0.	σ_r	Yield stress of core ribbons.	$lb/in.^2$
SIGRG	0.	σ_g	Yield stress of compression ring skin.	$lb/in.^2$
TCMAX	0.	$t_{c_{max.}}$	Maximum core thickness.	inches
TCMIN	0.	$t_{c_{min}}$	Minimum core thickness.	inches
TEMPA	0.		Maximum allowable structural temperature.	$^\circ F$
TEMPI	0.		Initial structural temperature.	$^\circ F$

573

Name	Preset Values	Symbol	Parameter	Units
TFMIN	0.01	$t_{f_{min}}$	Minimum honeycomb face sheet and monocoque skin thickness.	inches
THA	0.	θ_A	Afterbody cone angle.	degrees
THB	0.	θ_B	Flare angle.	degrees
THC	0.	θ_C	Forebody cone angle.	degrees
THN	0.	θ_N	Nosecap angle.	degrees
TH2G	0.	θ_{2G}	Initial angle for general tension shell.	degrees
TH3G	0.	θ_{3G}	Final angle for general tension shell.	degrees
TIME	0.		Time.	seconds
TINIT	0.		Initial temperature at which structural properties are selected.	$^\circ$F
TSTØP	0.		Maximum thermal design time during which $T_w \leq T_w$ max	$^\circ$F
TTAB	0.	t	Temperature table.	$^\circ$F
WHS	0.		Unit heat shield weight.	lb/ft^2
XA, XN, XC, XØ	0.		Mole fractions of argon, nitrogen, carbon dioxide, and oxygen in the atmosphere.	--
X, R	0.	X, R	Coordinates for general shell.	feet

B. INPUT PROCEDURES

1. General

a. Decimal points may be used on all numerical input data, although they are not necessary on integer values.

b. RC must always be specified.

c. If RB is not specified, then RB=RC.

d. Contour angles (θ) are measured relative to free stream and a positive value indicates an increasing body radius whereas a negative value indicates a decreasing body radius.

e. If several cases are run on a single memo, only changed inputs need be specified following the first case.

f. Input QTBL, HTBL, and RTBL as a function of TIME. For each value of TIME input there must be corresponding values of QTBL, HTBL, and RTBL (maximum of 150 values in each table). In stacking cases, it is necessary to add at least one 0. value at the end of the TIME table if the number of entries is decreased. This 0. value is used internally as an indication of the end of the table.

2. Shell Geometry

The section numbers and section parameters are identical to those of Programs 1881, 1882, and so forth. Although tori cannot be handled by the program, the tori parameters are nevertheless required in many cases to compute the fore and aft section radii.

SECTIONS

The vehicle sections are specified by an ordered list of numbers which identify them and place them in the desired sequence. The number list is given below, and the corresponding sections are further described by Figures 5 and 6.

Number	Section	Input Required
1.	NOSE SPHERE	RN, THN
2.	TORUS	RSN
3.	CONE	THC
4.	TENSION SHELL	BETA
5.	GENERAL SHAPE	TH2G, TH3G, X, R
6.	TORUS	RSC, RC
7.	CYLINDER	LC
8.	FLARE	THB
9.	TORUS	RSB, RB
10.	TORUS	RSB
11.	AFTCØNE	THA
12.	AFTSPHERE	RA
13.	BASE	RT

3. Construction Options

a. Monocoque analysis for the spherical cap for flat base is used when the option sentinel MØN = 1 is specified.

b. Ring-stiffened analysis for the conical and cylindrical sections is used when the option sentinel RSD = 1 is specified.

c. The hot structure analysis is utilized when the option sentinel HTST = 1 is specified.

d. The program will use honeycomb if and only if, no option sentinels are specified.

e. Ring depth optimized if HTØP = 2.0.

4. Design Factors

a. Conical Shell Buckling

The calculation model for an unstiffened cylinder under external pressure reduces to the expression

$$PCR = \frac{0.92\, E_f\, t_f^{5/2}}{R_c^{3/2}\, L_c} = (P_e) \qquad \text{Reference 9}$$

which agrees precisely with equation (3) of Reference 9. The data summary given in Reference 9 indicates that the theoretical critical pressure is too large, and should be reduced, and a design factor of (0.8) is reasonable. Calculations using Program 1886 for cones under hydrostatic pressure are summarized:

$\beta = 1 - \frac{R_1}{R_2}$	P_{cr}/P_e $\theta_c = 30$ degrees	P_{cr}/P_e $\theta_c = 60$
0.1	0.99	0.97
0.3	1.00	0.98
0.5	1.05	1.02
0.7	1.12	1.08
0.8	1.20	1.14
0.9	1.18	1.15
1.0	1.18	1.16

Using the recommended design criteria of Reference 9 would require factors on the aerodynamic pressure ranging from (1.2) at small values of (β) to (1.5) at large values of (β).

b. Interaction Effects

The calculation model for buckling under combined lateral pressure and axial loading yields a theoretical interaction curve similar to those presented in Reference 9. Typical results obtained from Program 1886 are given in the following table for cylinder with $t/_R = 0.01$

$\bar{\gamma}$	P_{CR}/P_{cro}	$F/2\pi E_f t_f^2$
0	1.00	0.00
4	0.88	0.08
10	0.81	0.18
20	0.61	0.27
40	0.43	0.38
100	0.22	0.48
200	0.11	0.48
400	0.05	0.48

where F is the axial load and P_{cro} is the critical lateral buckling pressure with zero axial load.

The agreement with experiment for small values of ($\bar{\gamma}$) is reasonably good; however, a correction factor is needed at large values. An empirical correction factor is formulated for cylinders in Reference 10 which is a function of the (t/R) ratio. In order to facilitate an empirical correction to the program model, an additional optional input, designated CBAR is provided, which modifies the value of $\bar{\gamma}$ used in the equations, such that

$$(\bar{\gamma})_{used} = CBAR\ (\bar{\gamma})_{input} \quad .$$

The value of CBAR is preset to 1.0.

c. Spherical Cap Buckling

The empirical correlation of available buckling data used in Program 1886 is shown in Figure 1. The value of λ for sandwich shells is generally smaller than for monocoque shells, being given by

$$\lambda = 2(1-\nu_f)^{1/4} \left(\frac{h}{t_c}\right)^{1/2} \quad .$$

Hence, it appears that the formulation utilized results in smaller knockdown factors due to imperfections, for sandwich shells than for monocoque shells.

5. Input Forms

An input form is provided for the user. All the information shown is key-punched provided the variable is specified All numerical values have decimal points.

C. OUTPUT DEFINITIONS

Name	Parameter	Units
AG	Area of general shell.	ft^2
AT	Area of tension shell.	ft^2
H	Height of stiffener.	inches
N	Number of stiffeners.	--
RØC	Core density.	lb/ft^3
RR	Radius of compression ring.	inches
SIGH	Circumferential stress.	$lb/in.^2$
SIGM	Meridional stress.	$lb/in.^2$
SIGMH	Resultant yield stress criteria.	$lb/in.^2$
T3	Thickness of tension and for general shell adjacent to compression ring.	inches
TC	Core height required.	inches
TCY	Face sheet thickness required to satisfy yield criteria.	inches
TF	Face sheet thickness used.	inches
TFØPT	Face sheet thickness designed for optimum under buckle criteria.	inches
TIME	Time at which TWMAX occurs.	seconds
TNG	Thickness of face sheet based on local and general stability.	inches
TNL	Thickness of face sheet based on local stability.	inches

D. SAMPLE PROBLEM

1. Statement of Problem

Determine the external structural weight for a blunt cone configuration using the heating and loads obtained from the sample trajectory problem of Program 1880. A heat shield is to be used on the forebody, but the afterbody is to be a heat sink.

2. Computer Input Forms

The necessary input computer forms, shown in the following pages, contain all the necessary input. The nosecap and forecone are considered to be of aluminum honeycomb construction. The aft cone is of stiffened beryllium and the flat base section is of beryllium honeycomb.

3. Output

The program output is given on the succeeding pages. The nosecap is designed on minimum gage for the face sheets and core height. The face sheets of the forecone are minimum gage, but the core height is 0.479 inch. The afterbody design indicates a minimum weight for 64 stiffeners of 0.17 inch height. The maximum temperature achieved by the afterbody is 1168°F, which satisfies the allowable temperature limit. The weight required for the heating (temperature limit) is seen to be larger (WTQ > WT) than that required for the structural loads; hence weight reductions can be achieved by increasing the allowable temperature. The base cover is designed on minimum gage considerations.

The total skin weight is then

Section	Weight (pounds)
Nose	0.7
Forecone	104.6
Aft Cone	52.1
Base	18.3
Total	175.7 pounds

The weight calculated does not include the torus section; Program 1888 provides for inclusion of the complete shell.

RAD 2-0863
5 63

DIGITAL COMPUTER INPUT REQUEST FORM	PROBLEM NO 1886	PROGRAMMER
	TITLE Structural Preliminary Design Program	

MEMO NO	SECTION NO	WORK ORDER NO	(E240 USE ONLY)	REQUESTED BY	EXT	EST TIME	PAGE 1 OF 6 PAGES

$INPUT

DATE = _____,	MEMØ = _____,	CASE = _____,
A = _____,	LC = _____,	SIGCYF = _____,
BETA = _____,	MØN = _____,	SIGCYR = _____,
CBAR = _____,	NFAC = _____,	SIGRG = _____,
DELK1 = _____,	NTERM = _____,	TCMAX = _____,
DELK2 = _____,	PCR = _____,	TCMIN = _____,
DELTAU = _____,	QCMULT = _____,	TEMPA = _____,
DTHDY = _____,	QRMULT = _____,	TEMPI = _____,
EF = _____,	RA = _____,	TFMIN = _____,
EM = _____,	RB = _____,	THA = _____,
EN = _____,	RC = _____,	THB = _____,
EMISTR = _____,	RN = _____,	THC = _____,
EPS = _____,	RØCMAX = _____,	THN = _____,
ER = _____,	RØCMIN = _____,	TH2G = _____,
G = _____,	RØF = _____,	TH3G = _____,
GAMF = _____,	RØR = _____,	TINIT = _____,
GAMR = _____,	RØRG = _____,	TSTØP = _____,
GAMBAR = _____,	RSB = _____,	WHS = _____,
HS = _____,	RSC = _____,	XA = _____,
HTØP = _____,	RSD = _____,	XC = _____,
HTST = _____,	RSN = _____,	XN = _____,
KADHES = _____,	RT = _____,	XØ = _____,

CPTAB = _____, _____, _____, _____, _____,
_____, _____, _____, _____, _____,

EFTAB = _____, _____, _____, _____, _____,
_____, _____, _____, _____, _____,

GFTAB = _____, _____, _____, _____, _____,
_____, _____, _____, _____, _____,

GRTAB = _____, _____, _____, _____, _____,
_____, _____, _____, _____, _____,

SECTN = _____, _____, _____, _____, _____,
_____, _____, _____, _____, _____,

SGFTAB = _____, _____, _____, _____, _____,
_____, _____, _____, _____, _____,

SGRTAB = _____, _____, _____, _____, _____,
_____, _____, _____, _____, _____,

TTAB = _____, _____, _____, _____, _____,
_____, _____, _____, _____, _____,

R = _____, _____, _____, _____, _____,
_____, _____, _____, _____, _____,
_____, _____, _____, _____, _____,
_____, _____, _____, _____, _____,
_____, _____, _____, _____, _____,

X = _____, _____, _____, _____, _____,
_____, _____, _____, _____, _____,
_____, _____, _____, _____, _____,
_____, _____, _____, _____, _____,
_____, _____, _____, _____, _____,

HTBL = _____, _____, _____, _____, _____,
_____, _____, _____, _____, _____,
_____, _____, _____, _____, _____,
_____, _____, _____, _____, _____,
_____, _____, _____, _____, _____,

HTBL = _____, _____, _____, _____, _____,
(Continued)
_____, _____, _____, _____, _____,
_____, _____, _____, _____, _____,
_____, _____, _____, _____, _____,

RAD 2-0964
5-63

DIGITAL COMPUTER INPUT REQUEST FORM	PROBLEM NO	MEMO NO	SECTION NO	CONTINUATION SHEET PAGE 4 OF 6 PAGES

QTBL = (Continued)

RTBL =

RTBL = (Continued)

TIME =

RAD 2 0964
5-63

DIGITAL COMPUTER INPUT REQUEST FORM	PROBLEM NO.	MEMO NO.	SECTION NO	CONTINUATION SHEET PAGE 6 OF 6 PAGES

TIME = (Continued)

$

RAD-7 0963 5 63

DIGITAL COMPUTER INPUT REQUEST FORM	PROBLEM NO 1886	PROGRAMMER
	TITLE Structural Preliminary Design Program	

MEMO NO	SECTION NO	WORK ORDER NO	(E240 USE ONLY)	REQUESTED BY	EXT	EST TIME	PAGE 1 OF 7 PAGES
PL-179	W610	W305-050-0005		P. Levine	2996		

$INPUT

DATE	=	4.1	,	MEMØ	=		,	CASE	=		,
A	=		,	LC	=		,	SIGCYF	=	40000.	,
BETA	=		,	MØN	=		,	SIGCYR	=	40000.	,
CBAR	=	1.0	,	NFAC	=	2.0	,	SIGRG	=		,
DELK1	=		,	NTERM	=		,	TCMAX	=	3 0	,
DELK2	=		,	PCR	=	1.67	,	TCMIN	=	0.25	,
DELTAU	=	0 1	,	QCMULT	=		,	TEMPA	=	1200.	,
DTHDY	=		,	QRMULT	=		,	TEMPI	=	100.	,
EF	=	8 E6	,	RA	=		,	TFMIN	=	.01	,
EM	=		,	RB	=		,	THA	=	-80.	,
EN	=		,	RC	=	7.5	,	THB	=		,
EMISTR	=		,	RN	=	1 25	,	THC	=	60	,
EPS	=	01	,	RØCMAX	=	10.	,	THN	=	60.	,
ER	=		,	RØCMIN	=	1.	,	TH2G	=		,
G	=	25.8	,	RØF	=	172.	,	TH3G	=		,
GAMF	=	.33	,	RØR	=	172.	,	TINIT	=	100	,
GAMR	=	.33	,	RØRG	=		,	TSTØP	=	411 6	,
GAMBAR	=		,	RSB	=	0.15	,	WHS	=	1.0	,
HS	=		,	RSC	=	0.15	,	XA	=	0.	,
HTØP	=	1.0	,	RSD	=		,	XC	=	0.2	,
HTST	=		,	RSN	=		,	XN	=	0.8	,
KADHES	=	.20	,	RT	=	3.75	,	XØ	=	0.	,

CPTAB = 4 , 5 , 57 , .61 , .65 ,
67 , .7 , 73 , .76 , ,

EFTAB = 44.E6 , 42.E6 , 40.E6 , 37.E6 , 32.E6 ,
26.E6 , 15.E6 , 8.E6 , 1.E6 , ,

```
GFTAB = 10*.024,      ,      ,      ,      ,
        ,      ,      ,      ,      ,

GRTAB = 10*.32,      ,      ,      ,      ,
        ,      ,      ,      ,      ,

SECTN = 1 0,    3.0,      ,      ,      ,
        ,      ,      ,      ,      ,

SGFTAB = 60000., 58000., 52000., 46000., 40000.,
         32000., 20000., 10000., 1000.,      ,

SGRTAB = 95000., 95000., 95000., 92000., 90000.,
         90000, 85000., 70000., 10000.,      ,

TTAB  = 0,     200.,   400.,   600,    800.,
        1000.,  1200.,  1400.,  1600.,  0.,

R     =      ,      ,      ,      ,      ,
        ,      ,      ,      ,      ,
        ,      ,      ,      ,      ,
        ,      ,      ,      ,      ,
        ,      ,      ,      ,      ,

X     =      ,      ,      ,      ,      ,
        ,      ,      ,      ,      ,
        ,      ,      ,      ,      ,
        ,      ,      ,      ,      ,
        ,      ,      ,      ,      ,

HTBL  = 127.5,  130.9,  131.1,  131.4,  131.7,
        132.0,  132.2,  132.5,  132.7,  132.9,
        133.0,  133.1,  133.0,  132.8,  132.3,
        131.4,  129 9,  128.0,  126.4,  122.8,
        116 7,  108.2,  98.6,   89 4,   80.7,
```

RAD 2-0964 5 63

DIGITAL COMPUTER INPUT REQUEST FORM	PROBLEM NO	MEMO NO	SECTION NO	CONTINUATION SHEET
	1886	PL-179	W610	PAGE 3 OF 7 PAGES

HTBL = 72 5, 64 7, 57 4, 50 5, 44 1,
(Continued) 38 2, 32 7, 27.6, 23.1, 19 0,
15 3, 12 9, 10.8, 8 9, 7 2,
5 8, 4.7, 3.9, 3.7, 4 0,

QTBL = 0.1, 1.0, 1.2, 1.5, 1.8,
2.3, 2.8, 3.4, 4.1, 5.1,
6.2, 7.6, 9.4, 11.4, 14.1,
16.8, 20.3, 23.8, 27.2, 28.3,
29.4, 30.4, 28.7, 26.4, 23.8,

RAD 2 0964
5-63

DIGITAL COMPUTER INPUT REQUEST FORM	PROBLEM NO 1886	MEMO NO PL-179	SECTION NO W610	CONTINUATION SHEET PAGE 4 OF 7 PAGES

QTBL = 21.1, 18.5, 15.9, 13.5, 11.2,
(Continued)
9.2, 7.4, 5.8, 4.4, 3.2,
2.3, 1.7, 1.2, 0.8, 0.6,
0 3, 0.2, 0.1, 0., 0.,

RTBL = 45 * 0.,

RTBL = _____, _____, _____, _____, _____,
(Continued)

_____, _____, _____, _____, _____,
_____, _____, _____, _____, _____,
_____, _____, _____, _____, _____,
_____, _____, _____, _____, _____,

_____, _____, _____, _____, _____,
_____, _____, _____, _____, _____,
_____, _____, _____, _____, _____,
_____, _____, _____, _____, _____,
_____, _____, _____, _____, _____,

_____, _____, _____, _____, _____,
_____, _____, _____, _____, _____,
_____, _____, _____, _____, _____,
_____, _____, _____, _____, _____,
_____, _____, _____, _____, _____,

_____, _____, _____, _____, _____,
_____, _____, _____, _____, _____,
_____, _____, _____, _____, _____,
_____, _____, _____, _____, _____,
_____, _____, _____, _____, _____,

_____, _____, _____, _____, _____,
_____, _____, _____, _____, _____,
_____, _____, _____, _____, _____,
_____, _____, _____, _____, _____,
_____, _____, _____, _____, _____,

TIME = 0., 83 59, 91.01, 98.59, 106.29,
114.11, 122.04, 130.15, 138.41, 146.83,
155.43, 164.26, 173.32, 182.60, 192.13,
201.94, 212.11, 221.42, 229.50, 236.71,
243.49, 250.18, 256.24, 261.31, 265.89.

RAD 2 0267
5 63

DIGITAL COMPUTER INPUT REQUEST FORM	PROBLEM NO	MEMO NO	SECTION NO	CONTINUATION SHEET
	1886	PL-179	W610	PAGE 6 OF 7 PAGES

TIME = 270.19, 274.35, 278.41, 282.47, 286.62,
(Continued) 290.91, 295.42, 300.24, 305.47, 311.25,
317.80, 323.33, 329.62, 336.92, 345.61,
356.33, 370.26, 389.41, 426.40, 473.00,

$

RAD 2 0964 5-63	DIGITAL COMPUTER INPUT REQUEST FORM	PROBLEM NO	MEMO NO	SECTION NO	CONTINUATION SHEET
		1886	PL-179	W610	PAGE 7 OF 7 PAGES

```
$INPUT
CASE    =  2.0    ,
SECTN   =  11.    ,
EM      =  30.    ,
EPS     =  05     ,
HTØP    =  2 0    ,
HTST    =  1.0    ,
PCR     =  8 3E-3 ,
QCMULT  =  0 1    ,
RØF     =  116.   ,
RØR     =  500    ,
RSD     =  1 0    ,

$


$INPUT
CASE    =  3.0    ,
SECTN   =  13.    ,
HTØP    =  0.0    ,
HTST    =  0.0.   ,
QCMULT  =  0.05   ,
RSD     =  0.0    ,

$
```

* MEMORY MAP *

SYSTEM			00000 THRU 02717								
FILE BLOCK ORIGIN			02720								
FILES	1.	UNIT05	.								
	2.	UNIT06									
FILE LIST ORIGIN			02750								
PRE-EXECUTION INITIALIZATION			02754								
CALL ON OBJECT PROGRAM			02717								
OBJECT PROGRAM			03004 THRU 41547								
DECK ORIGIN		CONTROL SECTIONS (/NAME/=NON-0 LENGTH, (LOC)=DELETED, *=NOT REFERENCED)									
1. SSTIFS	03004	///	/(76252)	STIFS	06034						
2. 1886	06050	///	/(76252)	.....	07064 *						
3. SBUCKL	07100	///	/(76252)	BUCKLE	11325						
4. SMONOC	11341	///	/(76252)	MONOC	12754						
5. CNOSE	12770	NOSE	13415								
6. SRING	14017	RING	14211								
7. SCONE	14270	CONE	15511								
8. STENSN	15773	TENSON	16661								
9. SBASE	16766	BASE	17241								
10. SGNRLS	17374	GNRLSH	20050								
11. SCYLND	20302	CYLIND	21212								
12. SHOTST	21443	HOTSTR	22033								
13. SARTLU	22166	ARTLU	22400								
14. .LXCON	22551	.LXSTR	22551 *	.LXSTP	22555	.LXOUT	22623	.LXRTN	22635	IBEXIT	22635 *
		.LXCAL	22640 *	.LXERR	22640	.DBCLS	23032 *	.LXARG	23171	.LO	23214 *
		.CLSE	23222	.LFBL	23223 *	.LUNB	23224	.DFOUT	23225		
15. .IODEF	23231	.DSEIN	23231	.XIAC	23235 *	.CLOSE	23237	.OPEN	23241	.READ	23243
		.WRITE	23245	.BSR	23255 *	.READR	23265	.RELES	23267 *	.LAREA	23300
		.LFBLK	23316	.LTSX	23321 *	.AREA1	23333	.LUNBL	23341	.ENTRY	23345
		.GOA	23400	.GO	23404	.DERR	23420	.NOPXI	23421	.COMXI	23423
		.EXSA	23445								
16. .LXSL	23452	.LXSEL	23452	LXCSEL	23453	.LXTST	23456 *	.LXOVL	23516 *	.LXRCT	23527 *
		.LXIND	23576 *	.LXDIS	23601 *	.LXFLG	23602 *	.LTCH	23603		
17. .FPTRP	23611	.FFPT.	23611 *	.FPOUT	23750	.FPARG	23767	/.COUNT/	23771 *	OVFLOW	24042 *
18. .FRA?.	24051	E.1	24051	E.2	24052	E.3	24053	E.4	24054		
19. .XCC.	24055	CC.1	24055	CC.2	24056	CC.3	24057	CC.4	24060		
20. XIT	24061	EXIT	24061	.EXIT.	24061 *						
21. FXEM	24062	.FXEM.	24062	.FXOUT	24417	.FXARG	24425	/.OPTW./	24501		
22. FOUT	24512	.FOUT.	24512								
23. FCNV	25054	.FCON.	25054	.FCNV.	25077	.ENDFS	25112	.CNVSW	25114	.FDX1	25120
		.FDX2	25121	.DBC	25123	.DBC8	25244	.DBC9	25247	.DBC10	25254
		.DBC20	25302	.DDSW	25312	.DDFIX	25321	.FIXSW	25327	.DDBC	25404
		.DDRS1	25556	.DDRS2	25660	.01	25663	.02	25665	.FRR2	25752 *
		.ANPT	26006	.ONPT	26023	.LNTP	26077	.AOUT	26146	.DFLT	26164
		.ELT	26320	.DEXPN	26410	.EXD	26411	.HOUT	26541	.INTG	26611
		.LOUT	26727	.OOUT	26746	.XCF	26777	.TEST	27504	.KOUNT	27507
		.LIST	27512	.DONE	27523	.OUTBF	27567	.BUF	27615	.OSTO	27616
		.WIDTH	27617	.GAIN	27620	.GAIN1	27621	.FBDBF	27631	.DDOFL	27656
		.DDELG	27655	.MOD	27656	.PEX	27657	.EXP	27660	.DIG	27661
24. FIOS	27701	.FIOS.	27701	.FSEL.	30041	.FILR.	30045	.FRTB.	30054 *	.FRTD.	30061
		.FIL.	30066	.FCLS	30056 *	.FDPN	30072 *	READF	30076 *	.TOUT.	30241
		.REED	30247 *	.BIN	30250 *	.FCT	30251	.FCKSZ	30253 *		
25. FIOH	30335	.FIOH.	30335	.FFIL.	31124	.FRTN.	31151 *				

```
                    IOLOR                                                    12/01/64

  26. FWRD    31336     .FWRD.  31336
  27. FWRU    31362     .FWRU.  31362
  28. FWRO    31406     .FWRO.  31406    .FREST  31711 *
  29. FRDU    32013     .FRDU.  32013
  30. UNO5    32054     .UNO5.  32054
  31. UNO6    32055     .UNO6.  32055    .BUFSZ  32056
  32. FIOU    32061     .FIOU.  32061    .CTUIO  32534    .NMLST  32557    .NAME.  33662    .INTAP  33663
  33. JTNOR   34306     ATANOR  34364    ATANO   34373 *  ATANOD  34402 *
  34. JASIN   34411     ARSIMP  34452
  35. FLOG    34503     ALOG10  34503 *  ALOG    34505
  36. FXPF    34644     EXP     34644
  37. FSCH    34764     COS     34764    SIN     34766
  38. FSQR    35175     SQRT    35175
  39. FATN    35302     ATAN2   35302    ATAN    35304 *
  40. FXP2    35510     .XP2.   35510
  41. FXP3    35626     .XP3.   35626
  42. .IOCS   35753     .LIO)   35753    .MONSW  35773    .TEOR   36042    .DEFI.  36122    .JOINX  36166 *
                        .CLOS.  36205    .AITC.  36230    .SWI    36432 *  .SWO    36474 *  .OPEN.  36515
                        .OP4    36543 *  .OP7    36574 *  .OP9.2  36610 *  .RLSE.  36662    .RER2.  36662
                        .READ.  36663    .RER1.  36706    .WRIT.  36710    .MNT1A  37076 *  .EOFEX  37157 *
                        .FEEIT  37227    .GTIOX  37250    .RW7    37366 *  .RE7    40005 *  .ENDTR  40446
                        .SC59   40450 *  .BSR.   41061    .EOTOF  41206    .ETOF3  41214 *  .SWITC  41243
                        .TCHEX  41544    .BASIO  41547 *
  43. .IOCSM  41550
  44. //      76252

I/O BUFFERS                         41550 THRU  76153

UNUSED CORE                         76154 THRU  76251


$INPUT

DATE    =       0.40100000E 01,

MEMO    =       0.00000000E-38,

CASE    =       0.00000000E-38,

SECTN   =               1,          3,          0,          0,          0,          0,          0,
                        0,          0,          0,          0,          0,          0,

MON     =               0,

RSD     =               0,

HTOP    =               1,

HTST    =               0,

GAMF    =       0.33000000E 00,

EF      =       0.80000000E 07,

ROF     =       0.17200000E 03,

SIGCYF  =       0.40000000E 05,

GAMR    =       0.33000000E 00,

ER      =       0.00000000E-38,

ROR     =       0.17200000E 03,

SIGCYR  =       0.40000000E 05,

KADHES  =       0.20000000E 00,

PCR     =       0.16700000E 01,

TFMIN   =       0.10000000E-01,

TCMIN   =       0.25000000E 00,

TCMAX   =       0.30000000E 01,

ROCMIN  =       0.10000000E 01,

ROCMAX  =       0.10000000E 02,

GAMBAR  =       0.00000000E-38,

CBAR    =       0.10000000E 01,

WHS     =       0.10000000E 01,

G       =       0.25800000E 02,

HS      =       0.00000000E-38,

EM      =       0.00000000E-38,
```

```
EN     =      0.00000000E-38,
NFAC   =            2,
NTERM  =            0,
EPS    =      0.10000000E-01,
RN     =      0.12500000E-01,
RSN    =      0.00000000E-38,
THN    =      0.60000000E-02,
RA     =      0.00000000E-38,
THA    =      0.80000000E-02,
THC    =      0.60000000E-02,
RB     =      0.00000000E-38,
RSB    =      0.15000000E-00,
THB    =      0.00000000E-38,
RC     =      0.75000000E-01,
RSC    =      0.15000000E-00,
LC     =      0.00000000E-38,
RT     =      0.37500000E-01,
BETA   =      0.00000000E-38,
A      =      0.00000000E-38,
TH2G   =      0.00000000E-38,
TH3G   =      0.00000000E-38,
X      =      0.00000000E-38,    0.00000000E-38,    0.00000000E-38,    0.00000000E-38,    0.00000000E-38,
              0.00000000E-38,    0.00000000E-38,    0.00000000E-38,    0.00000000E-38,    0.00000000E-38,
              0.00000000E-38,    0.00000000E-38,    0.00000000E-38,    0.00000000E-38,    0.00000000E-38,
              0.00000000E-38,    0.00000000E-38,    0.00000000E-38,    0.00000000E-38,    0.00000000E-38,
              0.00000000E-38,    0.00000000E-38,    0.00000000E-38,    0.00000000E-38,    0.00000000E-38,
R      =      0.00000000E-38,    0.00000000E-38,    0.00000000E-38,    0.00000000E-38,    0.00000000E-38,
              0.00000000E-38,    0.00000000E-38,    0.00000000E-38,    0.00000000E-38,    0.00000000E-38,
              0.00000000E-38,    0.00000000E-38,    0.00000000E-38,    0.00000000E-38,    0.00000000E-38,
              0.00000000E-38,    0.00000000E-38,    0.00000000E-38,    0.00000000E-38,    0.00000000E-38,
              0.00000000E-38,    0.00000000E-38,    0.00000000E-38,    0.00000000E-38,    0.00000000E-38,
RORG   =      0.00000000E-38,
SIGRG  =      0.00000000E-38,
DTHDY  =      0.00000000E-38,
DELTAU =      0.10000000E-00,
```

EMISTR =	0.00000000E-38,				
QCMULT =	0.00000000E-38,				
QRMULT =	0.00000000E-38,				
XN =	0.80000000E 00,				
XO =	0.00000000E-38,				
XA =	0.00000000E-38,				
XC =	0.20000000E 00,				
TEMPI =	0.10000000E 03,				
TEMPA =	0.12000000E 04,				
TINIT =	0.10000000E 03,				
TSTOP =	0.41160000E 03,				
DELK1 =	0.00000000E-38,				
DELK2 =	0.00000000E-38,				
TIME =	0.00000000E-38,	0.83590000E 02,	0.91010000E 02,	0.98590000E 02,	0.10629000E 03,
	0.11411000E 03,	0.12204000E 03,	0.13015000E 03,	0.13841000E 03,	0.14683000E 03,
	0.15543000E 03,	0.16426000E 03,	0.17332000E 03,	0.18260000E 03,	0.19213000E 03,
	0.20194000E 03,	0.21211000E 03,	0.22142000E 03,	0.22950000E 03,	0.23671000E 03,
	0.24349000E 03,	0.25018000E 03,	0.25624000E 03,	0.26131000E 03,	0.26589000E 03,
	0.27019000E 03,	0.27435000E 03,	0.27841000E 03,	0.28247000E 03,	0.28662000E 03,
	0.29091000E 03,	0.29542000E 03,	0.30034000E 03,	0.30547000E 03,	0.31125000E 03,
	0.31780000E 03,	0.32333000E 03,	0.32962000E 03,	0.33692000E 03,	0.34561000E 03,
	0.35633000E 03,	0.37026000E 03,	0.38941000E 03,	0.42640000E 03,	0.47300000E 03,
	0.00000000E-38,	0.00000000E-38,	0.00000000E-38,	0.00000000E-38,	0.00000000E-38,
	0.00000000E-38,	0.00000000E-38,	0.00000000E-38,	0.00000000E-38,	0.00000000E-38,
	0.00000000E-38,	0.00000000E-38,	0.00000000E-38,	0.00000000E-38,	0.00000000E-38,
	0.00000000E-38,	0.00000000E-38,	0.00000000E-38,	0.00000000E-38,	0.00000000E-38,
	0.00000000E-38,	0.00000000E-38,	0.00000000E-38,	0.00000000E-38,	0.00000000E-38,
	0.00000000E-38,	0.00000000E-38,	0.00000000E-38,	0.00000000E-38,	0.00000000E-38,
	0.00000000E-38,	0.00000000E-38,	0.00000000E-38,	0.00000000E-38,	0.00000000E-38,
	0.00000000E-38,	0.00000000E-38,	0.00000000E-38,	0.00000000E-38,	0.00000000E-38,
	0.00000000E-38,	0.00000000E-38,	0.00000000E-38,	0.00000000E-38,	0.00000000E-38,
	0.00000000E-38,	0.00000000E-38,	0.00000000E-38,	0.00000000E-38,	0.00000000E-38,
	0.00000000E-38,	0.00000000E-38,	0.00000000E-38,	0.00000000E-38,	0.00000000E-38,
	0.00000000E-38,	0.00000000E-38,	0.00000000E-38,	0.00000000E-38,	0.00000000E-38,
	0.00000000E-38,	0.00000000E-38,	0.00000000E-38,	0.00000000E-38,	0.00000000E-38,
	0.00000000E-38,	0.00000000E-38,	0.00000000E-38,	0.00000000E-38,	0.00000000E-38,
	0.00000000E-38,	0.00000000E-38,	0.00000000E-38,	0.00000000E-38,	0.00000000E-38,
QTBL =	0.10000000E 00,	0.10000000E 01,	0.12000000E 01,	0.15000000E 01,	0.18000000E 01,
	0.23000000E 01,	0.28000000E 01,	0.34000000E 01,	0.41000000E 01,	0.51000000E 01,
	0.62000000E 01,	0.76000000E 01,	0.94000000E 01,	0.11400000E 02,	0.14100000E 02,

	0.16000000E 02,	0.20300000E 02,	0.23000000E 02,	0.27200000E 02,	0.28300000E 02,
	0.29400000E 02,	0.30400000E 02,	0.28700000E 02,	0.26400000E 02,	0.23800000E 02,
	0.21100000E 02,	0.18500000E 02,	0.15900000E 02,	0.13500000E 02,	0.11200000E 02,
	0.92000000E 01,	0.74000000E 01,	0.58000000E 01,	0.44000000E 01,	0.32000000E 01,
	0.23000000E 01,	0.17000000E 01,	0.12000000E 01,	0.80000000E 00,	0.60000000E 00,
	0.30000000E 00,	0.20000000E 00,	0.10000000E 00,	0.00000000E-38,	0.00000000E-38,
	0.00000000E-38,	0.00000000E-38,	0.00000000E-38

```
                0.13200000E 03,   0.13220000E 03,   0.13250000E 03,   0.13270000E 03,   0.13290000E 03,
                0.13300000E 03,   0.13310000E 03,   0.13300000E 03,   0.13280000E 03,   0.13230000E 03,
                0.13140000E 03,   0.12990000E 03,   0.12800000E 03,   0.12640000E 03,   0.12280000E 03,
                0.11670000E 03,   0.10820000E 03,   0.98600000E 02,   0.89400000E 02,   0.80700000E 02,
                0.72500000E 02,   0.64700000E 02,   0.57400000E 02,   0.50500000E 02,   0.44100000E 02,
                0.38200000E 02,   0.32700000E 02,   0.27600000E 02,   0.23100000E 02,   0.19000000E 02,
                0.15300000E 02,   0.12000000E 02,   0.10800000E 02,   0.89000000E 01,   0.72000000E 01,
                0.58000000E 01,   0.47000000E 01,   0.39000000E 01,   0.37000000E 01,   0.40000000E 01,
                0.00000000E-38,   0.00000000E-38,   0.00000000E-38,   0.00000000E-38,   0.00000000E-38
```

```
$INPUT
DATE   =        0.40100000E 01,
MEMO   =        0.00000000E-38,
CASE   =        0.20000000E-01,
SECTN  =              11,          0,          0,          0,          0,          0,          0,
                       0,          0,          0,          0,          0,          0,
MON    =               0,
RSD    =               1,
HTOP   =               2,
HTST   =               1,
GAMF   =        0.33000000E 00,
EF     =        0.80000000E 07,
ROF    =        0.11600000E 03,
SIGCYF =        0.40000000E 05,
GAMR   =        0.33000000E 00,
ER     =        0.00000000E-38,
ROR    =        0.50000000E 03,
SIGCYR =        0.40000000E 05,
KADHES =        0.20000000E 00,
PCR    =        0.83000000E-02,
TFMIN  =        0.10000000E-01,
TCMIN  =        0.25000000E 00,
TCMAX  =        0.30000000E 01,
ROCMIN =        0.10000000E 01,
ROCMAX =        0.10000000E 02,
GAMBAR =        0.00000000E-38,
CBAR   =        0.10000000E 01,
WHS    =        0.00000000E-38,
G      =        0.25800000E 02,
HS     =        0.00000000E-38,
EM     =        0.30000000E 02,
```

```
EN      =    0.00000000E-30,
NFAC    =          2,
NTERM   =          0,
EPS     =    0.50000000E-01,
RN      =    0.12500000E-01,
RSN     =    0.00000000E-38,
THN     =    0.60000000E-02,
RA      =    0.00000000E-38,
THA     =    0.80000000E-02,
THC     =    0.60000000E-02,
RB      =    0.00000000E-38,
RSB     =    0.15000000E-00,
THB     =    0.00000000E-38,
RC      =    0.75000000E-01,
RSC     =    0.15000000E-00,
LC      =    0.00000000E-38,
RT      =    0.37500000E-01,
BETA    =    0.00000000E-38,
A       =    0.00000000E-38,
TH2G    =    0.00000000E-38,
TH3G    =    0.00000000E-38,
X       =    0.00000000E-38,    0.00000000E-38,    0.00000000E-38,    0.00000000E-38,    0.00000000E-38,
             0.00000000E-38,    0.00000000E-38,    0.00000000E-38,    0.00000000E-38,    0.00000000E-38,
             0.00000000E-38,    0.00000000E-38,    0.00000000E-38,    0.00000000E-38,    0.00000000E-38,
             0.00000000E-38,    0.00000000E-38,    0.00000000E-38,    0.00000000E-38,    0.00000000E-38,
             0.00000000E-38,    0.00000000E-38,    0.00000000E-38,    0.00000000E-38,    0.00000000E-38,
R       =    0.00000000E-38,    0.00000000E-38,    0.00000000E-38,    0.00000000E-38,    0.00000000E-38,
             0.00000000E-38,    0.00000000E-38,    0.00000000E-38,    0.00000000E-38,    0.00000000E-38,
             0.00000000E-38,    0.00000000E-38,    0.00000000E-38,    0.00000000E-38,    0.00000000E-38,
             0.00000000E-38,    0.00000000E-38,    0.00000000E-38,    0.00000000E-38,    0.00000000E-38,
             0.00000000E-38,    0.00000000E-38,    0.00000000E-38,    0.00000000E-38,    0.00000000E-38,
RORG    =    0.00000000E-38,
SIGRG   =    0.00000000E-38,
DTHDY   =    0.00000000E-38,
DELTAU  =    0.10000000E-00,
```


601<

```
EMISFR =      0.00000000E-38,
QCMULT =      0.10000000E 00,
QRMULT =      0.00000000E-38,
XN     =      0.80000000E 00,
XO     =      0.00000000E-38,
XA     =      0.00000000E-38,
XC     =      0.20000000E-00,
TEMPI  =      0.10000000E 03,
TEMPA  =      0.12000000E 04,
TINIT  =      0.10000000E 03,
TSTOP  =      0.41160000E 03,
DELK1  =      0.00000000E-38,
DELK2  =      0.00000000E-38,

TIME   =      0.00000000E-38,   0.83590000E 02,   0.91010000E 02,   0.98590000E 02,   0.10629000E 03,
              0.11411000E 03,   0.12204000E 03,   0.13015000E 03,   0.13841000E 03,   0.14683000E 03,
              0.15543000E 03,   0.16426000E 03,   0.17332000E 03,   0.18260000E 03,   0.19213000E 03,
              0.20194000E 03,   0.21211000E 03,   0.22142000E 03,   0.22950000E 03,   0.23671000E 03,
              0.24349000E 03,   0.25015000E 03,   0.25624000E 03,   0.26131000E 03,   0.26589000E 03,
              0.27019000E 03,   0.27435000E 03,   0.27841000E 03,   0.28247000E 03,   0.28662000E 03,
              0.29091000E 03,   0.29542000E 02,   0.30024000E 03,   0.30547000E 03,   0.31125000E 03,
              0.31780000E 03,   0.32333000E 03,   0.32962000E 03,   0.33692000E 03,   0.34561000E 03,
              0.35633000E 03,   0.37026000E 03,   0.38941000E 03,   0.42640000E 03,   0.47300000E 03,
              0.00000000E-38,   0.00000000E-38,   0.00000000E-38,   0.00000000E-38,   0.00000000E-38,
              0.00000000E-38,   0.00000000E-38,   0.00000000E-38,   0.00000000E-38,   0.00000000E-38,
              0.00000000E-38,   0.00000000E-38,   0.00000000E-38,   0.00000000E-38,   0.00000000E-38,
              0.00000000E-38,   0.00000000E-38,   0.00000000E-38,   0.00000000E-38,   0.00000000E-38,
              0.00000000E-38,   0.00000000E-38,   0.00000000E-38,   0.00000000E-38,   0.00000000E-38,
              0.00000000E-38,   0.00000000E-38,   0.00000000E-38,   0.00000000E-38,   0.00000000E-38,
              0.00000000E-38,   0.00000000E-38,   0.00000000E-38,   0.00000000E-38,   0.00000000E-38,
              0.00000000E-38,   0.00000000E-38,   0.00000000E-38,   0.00000000E-38,   0.00000000E-38,
              0.00000000E-38,   0.00000000E-38,   0.00000000E-38,   0.00000000E-38,   0.00000000E-38,
              0.00000000E-38,   0.00000000E-38,   0.00000000E-38,   0.00000000E-38,   0.00000000E-38,
              0.00000000E-38,   0.00000000E-38,   0.00000000E-38,   0.00000000E-38,   0.00000000E-38,
              0.00000000E-38,   0.00000000E-38,   0.00000000E-38,   0.00000000E-38,   0.00000000E-38,
              0.00000000E-38,   0.00000000E-38,   0.00000000E-38,   0.00000000E-38,   0.00000000E-38,
              0.00000000E-38,   0.00000000E-38,   0.00000000E-38,   0.00000000E-38,   0.00000000E-38,
              0.00000000E-38,   0.00000000E-38,   0.00000000E-38,   0.00000000E-38,   0.00000000E-38,
              0.00000000E-38,   0.00000000E-38,   0.00000000E-38,   0.00000000E-38,   0.00000000E-38,
              0.00000000E-38,   0.00000000E-38,   0.00000000E-38,   0.00000000E-38,   0.00000000E-38,

QTBL   =      0.10000000E 00,   0.10000000E 01,   0.12000000E 01,   0.15000000E 01,   0.18000000E 01,
              0.23000000E 01,   0.28000000E 01,   0.34000000E 01,   0.41000000E 01,   0.51000000E 01,
              0.62000000E 01,   0.76000000E 01,   0.94000000E 01,   0.11400000E 02,   0.14100000E 02,
```

602<

	0.16800000E 02,	0.20300000E 02,	0.23800000E 02,	0.27200000E 02,	0.28300000E 02,
	0.29400000E 02,	0.30400000E 02,	0.28700000E 02,	0.26400000E 02,	0.23800000E 02,
	0.21100000E 02,	0.18500000E 02,	0.16000000E 02,	0.13500000E 02,	0.11200000E 02,
	0.92000000E 01,	0.74000000E 01,	0.58000000E 01,	0.44000000E 01,	0.32000000E 01,
	0.23000000E 01,	0.17000000E 01,	0.12000000E 01,	0.80000000E 00,	0.60000000E 00,
	0.30000000E 00,	0.20000000E 00,	0.10000000E 00,	0.00000000E-38,	0.00000000E-38,
	0.00000000E-38,	0.00000000E-38,	0.00000000E-38

	0.13200000E 03,	0.13220000E 03,	0.13250000E 03,	0.13270000E 03,	0.13290000E 03,
	0.13300000E 03,	0.13310000E 03,	0.13300000E 03,	0.13280000E 03,	0.13230000E 03,
	0.13140000E 03,	0.12900000E 03,	0.12800000E 03,	0.12640000E 03,	0.12280000E 03,
	0.11670000E 03,	0.10820000E 03,	0.98600000E 02,	0.89400000E 02,	0.80700000E 02,
	0.72500000E 02,	0.64700000E 02,	0.57400000E 02,	0.50500000E 02,	0.44100000E 02,
	0.38200000E 02,	0.32700000E 02,	0.27600000E 02,	0.23100000E 02,	0.19000000E 02,
	0.15300000E 02,	0.12900000E 02,	0.10800000E 02,	0.89000000E 01,	0.72000000E 01,
	0.58000000E 01,	0.47000000E 01,	0.39000000E 01,	0.37000000E 01,	0.40000000E 01,
	0.00000000E-38,	0.00000000E-38,	0.00000000E-38,	0.00000000E-38,	0.00000000E-38

```
 $INPUT
 DATE  =          0.41010000E 01,
 MEMO  =          0.00000000E-38,
 CASE  =          0.30000000E 01,
 SECTN =                13,          0,          0,          0,          0,          0,          0,
                         0,          0,          0,          0,          0,          0,
 MON   =                 0,
 RSO   =                 0,
 HTOP  =                 0,
 HTST  =                 0,
 GAMF  =          0.33000000E 00,
 EF    =          0.80000000E 07,
 RNF   =          0.11600000E 03,
 SIGCYF =         0.40000000E 05,
 GAMR  =          0.33000000E 00,
 ER    =          0.00000000E-38,
 RNR   =          0.50000000E 03,
 SIGCYR =         0.40000000E 05,
 KADHES =         0.20000000E 00,
 PCR   =          0.83000000E-02,
 TFMIN =          0.10000000E-01,
 TCMIN =          0.25000000E 00,
 TCMAX =          0.30000000E 01,
 ROCMIN =         0.10000000E 01,
 ROCMAX =         0.10000000E 02,
 GAMBAR =         0.00000000E-38,
 CBAR  =          0.10000000E 01,
 WHS   =          0.00000000E-38,
 G     =          0.25800000E 02,
 HS    =          0.00000000E-38,
 EM    =          0.30000000E 02,
```

```
EN      =      0.00000000E-38,
NFAC    =              2,
NTERM   =              0,
EPS     =      0.50000000E-01,
RN      =      0.12500000E-01,
RSN     =      0.00000000E-38,
THN     =      0.60000000E-02,
RA      =      0.00000000E-38,
THA     =      0.80000000E-02,
THC     =      0.60000000E-02,
RB      =      0.00000000E-38,
RSB     =      0.15000000E-00,
THB     =      0.00000000E-38,
RC      =      0.75000000E-01,
RSC     =      0.15000000E-00,
LC      =      0.00000000E-38,
RT      =      0.37500000E-01,
BETA    =      0.00000000E-38,
A       =      0.00000000E-38,
TH2G    =      0.00000000E-38,
TH3G    =      0.00000000E-38,
X       =      0.00000000E-38,    0.00000000E-38,    0.00000000E-38,    0.00000000E-38,    0.00000000E-38,
               0.00000000E-38,    0.00000000E-38,    0.00000000E-38,    0.00000000E-38,    0.00000000E-38,
               0.00000000E-38,    0.00000000E-38,    0.00000000E-38,    0.00000000E-38,    0.00000000E-38,
               0.00000000E-38,    0.00000000E-38,    0.00000000E-38,    0.00000000E-38,    0.00000000E-38,
               0.00000000E-38,    0.00000000E-38,    0.00000000E-38,    0.00000000E-38,    0.00000000E-38,
R       =      0.00000000E-38,    0.00000000E-38,    0.00000000E-38,    0.00000000E-38,    0.00000000E-38,
               0.00000000E-38,    0.00000000E-38,    0.00000000E-38,    0.00000000E-38,    0.00000000E-38,
               0.00000000E-38,    0.00000000E-38,    0.00000000E-38,    0.00000000E-38,    0.00000000E-38,
               0.00000000E-38,    0.00000000E-38,    0.00000000E-38,    0.00000000E-38,    0.00000000E-38,
               0.00000000E-38,    0.00000000E-38,    0.00000000E-38,    0.00000000E-38,    0.00000000E-38,
RORG    =      0.00000000E-38,
SIGRG   =      0.00000000E-38,
DTHDY   =      0.00000000E-38,
DELTAU  =      0.10000000E-00,
```

```
 EMISTR =    0.00000000E-38,
 QCMULT =    0.50000000E-01,
 QRMULT =    0.00000000E-38,
 XN     =    0.80000000E 00,
 XQ     =    0.00000000E-38,
 XA     =    0.00000000E-38,
 XG     =    0.20000000E 00,
 TEMPI  =    0.10000000E 03,
 TEMPA  =    0.12000000E 04,
 TINIT  =    0.10000000E 03,
 TSTOP  =    0.41160000E 03,
 DELK1  =    0.00000000E-38,
 DELK2  =    0.00000000E-38,

 TIME   =    0.00000000E-38,   0.83590000E 02,   0.91010000E 02,   0.98590000E 02,   0.10629000E 03,
             0.11411000E 03,   0.12204000E 03,   0.13015000E 03,   0.13841000E 03,   0.14683000E 03,
             0.15543000E 03,   0.16426000E 03,   0.17332000E 03,   0.18260000E 03,   0.19213000E 03,
             0.20194000E 03,   0.21211000E 03,   0.22142000E 03,   0.22950000E 03,   0.23671000E 03,
             0.24349000E 03,   0.25018000E 03,   0.25624000E 03,   0.26131000E 03,   0.26589000E 03,
             0.27019000E 03,   0.27435000E 03,   0.27841000E 03,   0.28247000E 03,   0.28662000E 03,
             0.29081000E 03,   0.29542000E 03,   0.30024000E 03,   0.30547000E 03,   0.31125000E 03,
             0.31780000E 03,   0.32333000E 03,   0.32962000E 03,   0.33692000E 03,   0.34561000E 03,
             0.35633000E 03,   0.37036000E 03,   0.38941000E 03,   0.42640000E 03,   0.47300000E 03,
             0.00000000E-38,   0.00000000E-38,   0.00000000E-38,   0.00000000E-38,   0.00000000E-38,
             0.00000000E-38,   0.00000000E-38,   0.00000000E-38,   0.00000000E-38,   0.00000000E-38,
             0.00000000E-38,   0.00000000E-38,   0.00000000E-38,   0.00000000E-38,   0.00000000E-38,
             0.00000000E-38,   0.00000000E-38,   0.00000000E-38,   0.00000000E-38,   0.00000000E-38,
             0.00000000E-38,   0.00000000E-38,   0.00000000E-38,   0.00000000E-38,   0.00000000E-38,
             0.00000000E-38,   0.00000000E-38,   0.00000000E-38,   0.00000000E-38,   0.00000000E-38,
             0.00000000E-38,   0.00000000E-38,   0.00000000E-38,   0.00000000E-38,   0.00000000E-38,
             0.00000000E-38,   0.00000000E-38,   0.00000000E-38,   0.00000000E-38,   0.00000000E-38,
             0.00000000E-38,   0.00000000E-38,   0.00000000E-38,   0.00000000E-38,   0.00000000E-38,
             0.00000000E-38,   0.00000000E-38,   0.00000000E-38,   0.00000000E-38,   0.00000000E-38,
             0.00000000E-38,   0.00000000E-38,   0.00000000E-38,   0.00000000E-38,   0.00000000E-38,
             0.00000000E-38,   0.00000000E-38,   0.00000000E-38,   0.00000000E-38,   0.00000000E-38,
             0.00000000E-38,   0.00000000E-38,   0.00000000E-38,   0.00000000E-38,   0.00000000E-38,
             0.00000000E-38,   0.00000000E-38,   0.00000000E-38,   0.00000000E-38,   0.00000000E-38,
             0.00000000E-38,   0.00000000E-38,   0.00000000E-38,   0.00000000E-38,   0.00000000E-38,
             0.00000000E-38,   0.00000000E-38,   0.00000000E-38,   0.00000000E-38,   0.00000000E-38,

 QTBL   =    0.10000000E 00,   0.10000000E 01,   0.12000000E 01,   0.15000000E 01,   0.18000000E 01,
             0.23000000E 01,   0.28000000E 01,   0.34000000E 01,   0.41000000E 01,   0.51000000E 01,
             0.62000000E 01,   0.76000000E 01,   0.94000000E 01,   0.11400000E 02,   0.14100000E 02,
```

	0.16800000E 02,	0.29300000E 02,	0.29800000E 02,	0.27200000E 02,	0.29300000E 02,
	0.29400000E 02,	0.30400000E 02,	0.28700000E 02,	0.26400000E 02,	0.23800000E 02,
	0.21100000E 02,	0.18500000E 02,	0.15900000E 02,	0.13500000E 02,	0.11200000E 02,
	0.92000000E 01,	0.74000000E 01,	0.58000000E 01,	0.44000000E 01,	0.32000000E 01,
	0.23000000E 01,	0.17000000E 01,	0.12000000E 01,	0.80000000E 00,	0.60000000E 00,
	0.30000000E 00,	0.20000000E 00,	0.10000000E 00,	0.00000000E-38,	0.00000000E-38,
	0.00000000E-38,	0.00000000E-38,	0.00000000E-38

```
                0.13200000E 03,   0.13220000E 03,   0.13250000E 03,   0.13270000E 03,   0.13290000E 03,
                0.13300000E 03,   0.13310000E 03,   0.13300000E 03,   0.13280000E 03,   0.13230000E 03,
                0.13140000E 03,   0.12990000E 03,   0.12800000E 03,   0.12640000E 03,   0.12280000E 03,
                0.11670000E 03,   0.10820000E 03,   0.98600000E 02,   0.89400000E 02,   0.80700000E 02,
                0.72500000E 02,   0.64700000E 02,   0.57400000E 02,   0.50500000E 02,   0.44100000E 02,
                0.38200000E 02,   0.32700000E 02,   0.27600000E 02,   0.23100000E 02,   0.19000000E 02,
                0.15300000E 02,   0.12900000E 02,   0.10800000E 02,   0.89000000E 01,   0.72600000E 01,
                0.58000000E 01,   0.47000000E 01,   0.39000000E 01,   0.37000000E 01,   0.40000000E 01,
                0.00000000E-38,   0.00000000E-38,   0.00000000E-38,   0.00000000E-38,   0.00000000E-38
```

III. COMPUTATIONS

A BLOCK DIAGRAM

The block diagram for Program 1886 is shown in Figure 7. It can be seen from the block diagram that the inputs provide for dealing with conical, spherical, and the tension and general shells with options for considering various construction approaches and for testing the structure to ascertain whether it is suitable as a hot structure

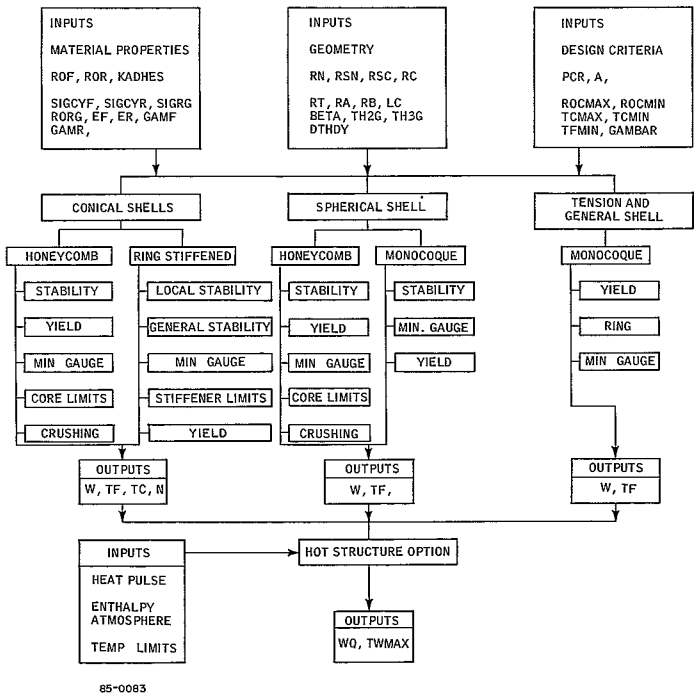

Figure 7 BLOCK DIAGRAM FOR PROGRAM 1886

610

B. SYMBOLS

Symbol	Parameter	Units
a	ratio of circumferential to meridianal stress	--
AT	area of tension shell	ft^2
AG	area of general shell	ft^2
A_T	stiffener area	$in.^2$
D	bending rigidity of shell	lb-in.
D_θ	equivalent orthotropic shell bending rigidity of ring-stiffened shell	lb-in.
E_f	modulus of elasticity of face sheets	$lb/in.^2$
E_R	modulus of elasticity for compression ring	$lb/in.^2$
h	height of spherical shell	inches
H	height of stiffener	inches
KAD	unit weight allowable for adhesives	lb/ft^2
I_x	stiffener moment of inertia about neutral axis	$in.^4$
I_θ	effective stiffener moment of inertia	$in.^4$
L_o	slant length of cone	inches
L_c	cylinder length	inches
m	effective width factor or stiffener	--
n	proportionality factor for stiffener	--
N	number of rings	--
P	stability parameter ^{5}	--
P_{CR}	critical pressure load	$lb/in.^2$
S	stability parameter ^{5}	--

T	temperature	^{o}R
t_c	core height	inches
t_f	face sheet thickness	inches
t_{copt}	optimized core height for buckling criteria	inches
t_{cy}	face sheet thickness required for yield criteria	inches
t_R	wall thickness of compression ring	inches
t_1, t_3, t_4	stability parameters	--
R_1, R_2	minimum and maximum radii of conical shell	inches
R_2, R_3	minimum and maximum radius for tension and general shell	inches
y	radial coordinate	inches
R_{SC}	toroidal radius following tension or general shell	inches
RR	radius of compression ring	inches
RC	maximum radius of tension or general shell combined with torus	inches
R_{CAP}	spherical cap radius	inches
q_c	convective heat rate	Btu/ft^2-sec
q_R	radiative heat rate	Btu/ft^2-sec
H_w	enthalpy of gas at wall	Btu/lb
H_s	stagnation enthalpy	Btu/lb
C_p	specific heat	Btu/lb-^{o}F
W_e	effective width	inches
W	unit area weight	lb/ft^2
WR	total compression ring weight	pounds
WTG	total general shell weight	pounds

WTT	total tension shell weight	pounds
ν_f	Poisson's Ratio	--
σ_{cy}	yield stress of face sheets	$lb/in.^2$
ρ_f	face sheet density	lb/ft^3
ρ_c	core density	lb/ft^3
σ_{CR}	yield stress of core ribbon	$lb/in.^2$
β	cone parameter, also tension shell angle (degrees)	--
ρ_R	density of core ribbon	lb/ft^3
θ	local body slope angle	degrees
θ_{3G}	last angle on general shell	degrees
τ	time	seconds
ϵ	emissivity	

C. EQUATIONS

1. Sandwich Construction - - Spherical Cap

a. Face Sheets

$$t_{f\,opt} = \left(\frac{3K_2}{4K_1}\right)^{4/7} \qquad (1)$$

$$t_f = 0.36\,(1-\nu_f^2)^{2/3}\left(\frac{P_{CR}}{E_f}\right)\frac{h^{1/3}}{t_c^{4/3}}\,R_{CAP}^2 \qquad (2)$$

$$t_{cy} = \frac{P_{CR}\,R_{CAP}}{4\sigma_{cy}} \qquad (3)$$

b. Core

$$t_{c\ opt} = \frac{12\ K_2}{\rho_c} \left[\frac{4K_1}{3K_2}\right]^{3/7} \tag{4}$$

$$t_c = 0\ 465\ (1 - \nu_f^2)^{1/2} \left(\frac{P_{CR}}{E_f}\right)^{3/4} \frac{h^{1/4}}{t_f^{3/4}} R_{CAP}^{3/2} \tag{5}$$

$$\rho_c = 0.22\ \rho_R \left(\frac{P_{CR}}{\sigma_{CR}}\right)^{0.588} \tag{6}$$

c. Weight

$$W_{opt} = 7/3\ K_1 \left[\frac{3K_2}{4K_1}\right]^{4/7} + KAD \tag{7}$$

$$W = K_1\ t_f + \frac{1}{12}\ \rho_c\ t_c + KAD \tag{8}$$

$$K_1 = \rho_f/6 \tag{9}$$

$$K_2 = \frac{\rho_c}{12} \left[0.465\ (1 - \nu_f^2)^{1/2} \left(\frac{P_{CR}}{E_f}\right)^{3/4} h^{1/4}\ R_{CAP}^{3/2}\right] \tag{10}$$

$$h = R_{CAP}\ (1 - \sin \theta_{CAP}) \tag{11}$$

$$P_{CR} = P_{AERO} \pm \frac{(W + WHS)}{144}\ G$$

2. Sandwich Construction--Conical Section

a. Face Sheet

$$t_{f\ opt} = \frac{4\ 89}{\rho_f} \left[C_1^{0.414}\ C_2^{0.586}\right] \tag{12}$$

$$t_f = \frac{P\ k}{18.6\ (A\ t_c^{1/2})\ 2.84} \tag{13}$$

614

$$t_{cy} = \frac{P_{CR}\ R_2}{4\sigma_{cy}\ \cos\theta_c}\left\{3 + (1 - \bar{\gamma})^2\ \left(\frac{R_1}{R_2}\right)^4\right\}^{1/2} \tag{14}$$

b. Core

$$t_{c\ opt} = 1\,156\left(\frac{C_1}{C_2}\right)^{0.414} \tag{15}$$

$$t_c = 0.127\left(\frac{P\,k}{t_f\,A^{2.84}}\right)^{0.704} \tag{16}$$

c. Weight

$$W_{opt} = 1\,971\ C_1^{0.414}\ C_2^{0.586} + KAD \tag{17}$$

$$W = \frac{1}{6}\ \rho_f\ t_f + \frac{1}{12}\ \rho_c\ t_c + KAD \tag{18}$$

t_1, t_3, t_4 evaluated from table 1.

$$A = \left(\frac{\lambda K_1}{k^{3/2}\ K_2}\right)\left(\frac{2t_1\ t_3\ t_4}{2t_3 - \nu_f^2}\right)^{1/4} \tag{19}$$

$$k = \frac{R_2\,(1 - \beta/2)}{\cos\theta_c} \tag{20}$$

$$\beta = \left[1 - \left(\frac{R_1}{R_2}\right)\right] \tag{21}$$

$$K_2 = K\left[1 \pm \frac{(WHS + W)\ G}{144\ P_{CR}}\ \sin\theta_c\right] \tag{22}$$

$$K_1 = \frac{K^3}{2\left(1 - \frac{\beta}{2}\right)^2} \left\{ 1 - \beta + \frac{\beta^2}{3} + \frac{\beta^2}{2\pi^2} - (1 - \bar{\gamma})(1 - \beta)^2 \right.$$

$$\left. \pm \frac{\beta}{\sin \theta_c} \frac{(WHS + W)\, G}{(144)\, P_{CR}} \left(1 - \beta + \frac{\beta}{3} + \frac{\beta}{2\pi^2} \right) \right\} \qquad (23)$$

$$\lambda = \frac{\pi \sin \theta_c}{R_2\, \beta} \qquad (24)$$

$$C_1 = \frac{P\, k \rho_f}{111.9\, A^{2.84}} \qquad (25)$$

$$C_2 = \rho_c / 12 \qquad (26)$$

$$\rho_c = 0.22\, \rho_R \left(\frac{P_{CR}}{\sigma_{cyR}} \right)^{0.588} \qquad (27)$$

$$P = \left(\frac{32\, t_1\, t_3\, \lambda^2\, K_1^3}{k^7} \right) \frac{(1 - \nu_f^2)}{(2\, t_3 - \nu_f^2)} \frac{P_{CR}}{E_f} \qquad (28)$$

TABLE I

EVALUATION OF THE CONSTANTS T_1, T_3, T_4 as a FUNCTION OF THE GEOMETRIC PARAMETER β

β	t_1	t_3	t_4
0.00	0.50000	0.50000	0.50000
0.10	0.50074	0.50018	0.50027
0.20	0 50334	0 50081	0.50470
0.25	0.50554	0.50134	0.50803
0.35	0.51242	0 50300	0.51621
0 40	0.51748	0.50417	0.52532
0.50	0.53223	0.50749	0.54946
0 55	0.54273	0.50985	0.56400
0.60	0.55625	0.51276	0.58430
0.65	0.57382	0.51638	0.61134
0.70	0.59704	0.52093	0.64769
0.75	0.62853	0.52670	0.69795
1.00	0.62853	0.52670	0.69795

3. Sandwich Construction--Cylindrical Section

a. Face Sheet

$$t_{f\,opt} = \frac{4.7\ X_1^{2/5}\ X_2^{3/5}}{\rho_f} \tag{29}$$

$$t_f = \frac{1.75}{P_B\ 3.87\ E_f \cdot t_c^{1.5}} \left\{ P_{CR} \cdot R_C^{3/2}\ L_C \cdot (1-\nu_f^2)^{3/4} \right\} \tag{30}$$

$$t_{cy} = \frac{P_{CR}\ R_C}{2\sigma_f} \tag{31}$$

b. Core Thickness

$$t_{c\,opt} = 1.176 \left(\frac{X_1}{X_2}\right)^{2/5} \tag{32}$$

$$t_c = 0.404 \left(\frac{P_{CR}\ R_C^{3/2}\ L_c}{E_f\ t_f}\right)^{2/3} (1-\nu_f^2)^{1/2} \left(\frac{1.75}{P_B}\right)^{2/3} \tag{33}$$

c. Weight

$$\left.\begin{aligned} W_{opt} &= 1.959\ X_1^{2/5}\ X_2^{3/5} + KAD \\ \text{or} \\ W &= \frac{\rho_f\ t_f}{6} + \frac{\rho_c\ t_c}{12} + KAD \end{aligned}\right\} \tag{34}$$

$$\left.\begin{aligned} X_1 &= \frac{\rho_f\ P_{CR}\ R_C^{3/2}\ (L_C)}{23.2\ E_f} (1-\nu_f^2)^{3/4} \left(\frac{1.75}{P_B}\right) \\ \text{and} \\ X_2 &= \rho_c/12 \end{aligned}\right\} \tag{35}$$

$$P_B = \frac{\left[\frac{3+S}{1+S} + 1\right]}{\left[\frac{3+S}{1+S}\right]^{1/2} \left[\left(\frac{3+S}{1+S}\right)^{1/4} + \frac{S}{2}\right]} \tag{36}$$

$$S = \frac{2.22 . t_c^{1/2} . R_c^{1/2}}{L_c(1-\nu_f^2)^{1/4}} \cdot \left[\bar{\gamma} + \frac{L_c}{R_c} \frac{(WHS + W)G}{(144) P_{CR}}\right] \tag{37}$$

$$\rho_c = 0\ 22\ \rho_R \left(\frac{P_{CR}}{\sigma_{CR}}\right)^{0\ 588} \tag{38}$$

4. Monocoque Spherical Cap

$$t_f = 1.20 \left(\frac{P_{CR}}{E_f}\right)^{3/7} (1-\nu^2)^{2/7} \left(\frac{h}{R_{CAP}}\right)^{1/7} R_{CAP} \tag{39}$$

$$t_{cy} = \frac{P_{CR} R}{2\sigma_{cy}} \tag{40}$$

$$h = R_{CAP} (1 - \cos \theta_{CAP}) \tag{41}$$

$$W = \frac{\rho_f t_f}{12} \tag{42}$$

$$P_{CR} = P_{AERO} \pm \frac{(W + WHS)G}{144}$$

5. Ring Stiffened Conical and Cylindrical Sections

$$P_{CR}(S) = \frac{P(S)\,\pi\,(D_\theta/D)^{3/4}\,t_4\,t^{5/2}\,[12\,(2t_3 - \nu_f^2)]^{1/4}\,E_f}{6\,(1-\nu_f^2)\,L\,K_2\,K^{1/2}\,(8t_1 t_3 t_4)^{1/4}} \tag{43}$$

$$K = R_2\,\frac{(1-\beta/2)}{\cos\theta_c} \tag{44}$$

$$\beta = \left[1 - \left(\frac{R_1}{R_2}\right)\right] \tag{45}$$

$$D = \frac{E_f\,t_f^3}{(12)(1-\nu^2)} \tag{46}$$

$$D_\theta = (N+1)\,\frac{I_\theta\,E_f}{L_o} \tag{47}$$

$$L_o = \frac{R_2 - R_1}{\sin\theta} \qquad \theta > 0 \tag{48}$$

$$L_o = L_C \qquad \theta = 0 \tag{49}$$

$$L = \frac{L_o}{N+1} \tag{50}$$

$$P = \frac{\left[\frac{3+S}{1+S} + 1\right]}{\left(\frac{3+S}{1+S}\right)^{1/2}\left[\left(\frac{3+S}{1+S}\right)^{1/4} + \frac{S}{2}\right]} \tag{51}$$

$$S = B\left(\frac{D_\theta}{D}\right)^{1/4} t_f^{1/2} \tag{52}$$

$$B = \frac{2\pi K_1 K^{1/2}}{K_2 L K^2}\,\frac{[8t_1 t_3 t_4]^{1/4}}{[12(2t_3 - \nu^2)]^{1/4}} \tag{53}$$

619<

$$K_1 = \frac{K^3}{2\left(\bar{1} - \frac{\beta}{2}\right)^2}\left\{1 - \beta + \frac{\beta^2}{3} + \frac{\beta^2}{2\pi^2} - (1 - \bar{\gamma})(1 - \beta)^2 \right.$$

$$\left. \pm \frac{L}{R_2}\,\frac{(WHS + W)\,G}{(144)\,P_{CR}}\left(1 - \beta + \frac{\beta}{3} + \frac{\beta}{2\pi^2}\right)\right\} \tag{54}$$

$$K_2 = K\left[1 \pm \frac{(WHS + W)\,G}{(144)\,P_{CR}}\,\sin\theta_c\right] \tag{55}$$

$$I_\theta = I_x - A_T\,\bar{y}^2 \tag{56}$$

$$W_e = m t_f, \quad \text{and} \quad b = nH \tag{57}$$

$$I_x = \frac{m t_f^4}{3} + t_f H (2n + 1)\left(\frac{H}{2} + t_f\right)^2 + \left(\frac{nH + t_f}{12}\right) H^3 - \frac{nH\,(H - 2t_f)^3}{12} \tag{58}$$

$$AT = t_f H (2n + 1) + m t_f^2 \tag{59}$$

$$\bar{y} = \frac{\frac{m t_f^3}{2} + t_f H (2n + 1)(H/2 + t_f)}{AT} \tag{60}$$

$$W = \frac{\pi \rho_f t_f (R_1 + R_2) L_o + 2\pi H t_f (2n + 1)\,\rho\left[NR_2 - \frac{NL_o \sin\theta}{2}\right]}{12\,\pi\,(R_1 + R_2) L_o} \tag{61}$$

6. Monocoque Tension Shell

$$t_{f3} = \frac{P_{CR}\,R_3}{C_1\,\sigma_f} \tag{62}$$

$$C_1 = \frac{2}{\left[1 - (R_2/R_3)^2\right]}\,\ln\left(\frac{1 + \cos\beta}{\sin\beta}\right) \tag{63}$$

$$W = \frac{W_{TT}}{AT} \tag{64}$$

$$W_{TT} = 2\pi \frac{\rho_f}{1728} \int_{\theta=\beta}^{\theta=\pi/2} \frac{t_f}{\sin\theta} \; y\left(\frac{dy}{d\theta}\right) \, d\theta \tag{65}$$

$$AT = \frac{2\pi}{144} \int_{\theta=\beta}^{\theta=\pi/2} \frac{1}{\sin\theta} \; y\left(\frac{dy}{d\theta}\right) \, d\theta \tag{66}$$

$$y \frac{dy}{d\theta} = \frac{-(R_2^2 - R_3^2)}{2 \sin\theta \ln\left(\frac{1+\cos\beta}{\sin\beta}\right)} \tag{67}$$

$$t_f = \frac{R_3 \, t_3}{y} \tag{68}$$

$$y = \left\{ R_3^2 + (R_2^2 - R_3^2) \frac{\ln\left(\frac{1+\cos\theta}{\sin\theta}\right)}{\ln\left(\frac{1+\cos\beta}{\sin\beta}\right)} \right\}^{1/2} \tag{69}$$

7. Monocoque General Tension Shell

$$W = \frac{WTG}{AG} \tag{70}$$

$$WTG = \frac{2\pi \rho_f}{1728} \int_{R_2}^{R_3} \frac{t_f \, y \, dy}{\sin\theta} \tag{71}$$

$$AG = \frac{2\pi}{144} \int_{R_2}^{R_3} \frac{y \, dy}{\sin\theta} \tag{72}$$

$$\cot\theta = \frac{x_j - x_i}{y_j - y_i} \tag{73}$$

$$t_f = t_{f3} \frac{R_3^{1-a}}{y^{1-a}} \tag{74}$$

$$t_{f3} = \frac{-P_{CR}}{\left[-\sin\theta_{3G}\left(\frac{d\theta}{dy}\right)_3 + \frac{a\cos\theta_{3G}}{R_3}\right]\sigma_{cy}} \tag{75}$$

8. Compression Ring

$$WSCST = \frac{WR\,(144)}{2\pi R_{SC}\left[\frac{R_3\,\theta_3}{57.3} + R_{SC}\left(\sin\theta_3 - \frac{\theta_3\cos\theta_3}{57.3}\right)\right]} \tag{76}$$

$$WR = \frac{4\pi^2\,RR}{1728}\, t_R\,\rho_R\,(R_C - RR) \tag{77}$$

$$RR = \left(\frac{R_C^3}{1.7\pi}\sqrt{\frac{2\pi\,(0.3)\,t_3\,\sigma_f}{E_R\,R_C}}\right)^{1/3} \tag{78}$$

9. Hot Structures

$$W C_p \frac{dT}{d\tau} = q_c\left(1 - \frac{H_w}{H_s}\right) + q_R - \epsilon\left(\frac{T_w}{1200}\right)^4 \tag{79}$$

10. Base Section

$$PCR = (P_{CR})_{aero} + \frac{(WHS + W)G}{144} \tag{80}$$

Monocoque

$$W = \rho_f \cdot \frac{t_f}{12} \tag{81}$$

$$t_F = \sqrt{\frac{3}{8}\,\frac{R_T\,2\;P_{CR}\cdot(3+\nu)}{\sigma_f}} \tag{82}$$

Honeycomb

$$W = \frac{1}{12}\ \rho_c \cdot t_c + ZK + \frac{1}{6}\ \rho_f \cdot t_f \tag{83}$$

$$\rho_c = 0\ 22 \cdot \rho_f \cdot \left(\frac{P_{CR}}{\sigma_R}\right)^{0\ 58} \tag{84}$$

$$Z1 = \frac{\rho_f}{16} \tag{85}$$

$$Z3 = \frac{1}{16}\ \frac{[P_{CR} \cdot (R_T)^2](3+\nu)}{(\sigma_f)} \tag{86}$$

$$(t_f)_{opt} = \sqrt{\frac{Z3}{Z1}} \tag{87}$$

$$(t_c)_{opt} = \frac{Z3}{t_f} \tag{88}$$

$$t_f = \frac{(P_{CR} \cdot R_T{}^2)(3+\nu)}{16\,(\sigma_f)\,t_c} \tag{89}$$

11. Yield Criteria

a. Cones, Cylinders

$$N_\theta = \frac{\left[P_{CR} - \frac{(WHS + W)}{144}\ G \sin\theta\right] R}{\cos\theta} \tag{90}$$

b. Cones

$$N_\phi = \frac{-P_{CR}}{2\,R \cos\theta}\ \left[R^2 + R_1{}^2(\bar{y} - 1)\right] + \frac{G(R^2 - R_1^2)(WHS + W)}{2\,R \sin\theta \cos\theta\,(144)} \tag{91}$$

c. Cylinders

$$N_\phi = \frac{-P_{CR}\,R_C\,\bar{y}}{2} - \frac{G(L_C)(WHS + W)}{(144)} \tag{92}$$

d. M-H Criteria

$$N_y^2 = N_\theta^2 + N_\phi^2 - N_\theta N_\phi \tag{93}$$

e. Elastic Yield Requirements (sandwich construction)

$$t_f \geq \frac{(N_y)_{max}}{2\sigma_f} \tag{94}$$

f. Combined stress

$$SIGMH = \frac{(N_y)_{max}}{2t_f} \tag{95}$$

g. Meridional stress

$$SIGM = \frac{N_\phi}{2t_f} \tag{96}$$

h. Circumferential stress

$$SIGH = \frac{N_\theta}{2t_f} \tag{97}$$

IV. IBM ROUTINES

A. PROGRAM FLOW

Given vehicle geometry, structural material properties, and pressure loads, Program 1886 computes the weight of the external structure on each segment of the vehicle which will survive reentry. The segments of the vehicle may include a spherical nose cap, cones, cylinders, rear spherical cap, tension shell, and general shell. The program flow diagram is shown in Figure 8.

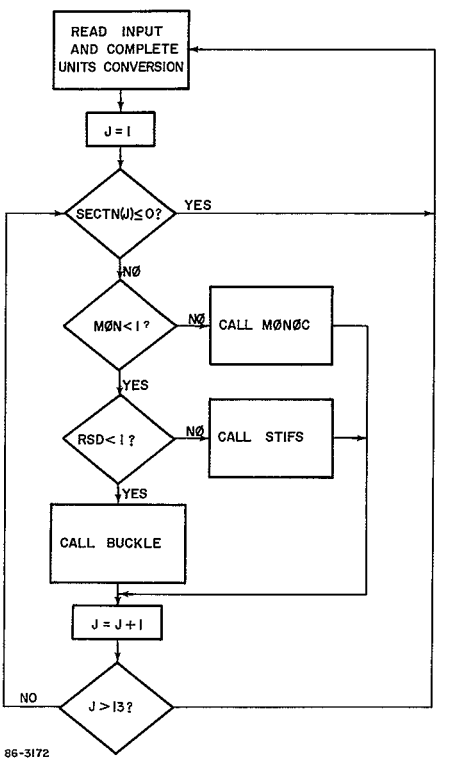

Figure 8 Flow Diagram For Program 1886

625

B. MAIN PRØGRAM

1. Purpose

The purpose of the main program is to acquire the program input, and make any necessary units conversions before transfering control to the appropriate subroutine for the calculation of the structural weight.

2 Method

Initially the types and dimensions of main program variables are specified and common storage is set up for the transmission of data to subroutines BUCKLE, MØNØC, and STIFS.

In the first executable statements of the program tables of BT (the geometric Parameter β) and of the dependent variables T1T, T3T, and T4T are defined element by element in arithmetic statements.

In the DØ 10 loop CØMMØN data (from SECTN through DELK2) is preset to 0. Since most of the program input variables appear in CØMMØN, this loop zeros out a large portion of the namelist data. The remainder of the input is preset in the data and arithmetic statements immediately following Statement 10.

The data is read in through the namelist array INPUT and immediately written on the output tape. The vehicle radii are then converted to inches, and the angles to radians for internal use If RB and TINIT have not been specified, they are taken to be RC and TEMPI, respectively.

In the DØ 30 loop NTAU, the number of elements in the array TIME, is calculated (by searching for the first 0 beyond the first element of the array).

Then for each vehicle section specified in the array SECTN, the DØ 100 loop transfers control to one of the subroutines BUCKLE, MØNØC, or STIFS according to the following criteria: if MØN $\geq$ 1, subroutine MØNØC is called; if MØN $<$1 and RSD $\geq$ 1, subroutine STIFS is called; if MØN$<$ 1 and RSD $<$1, subroutine BUCKLE is called The first value of SECTN $\leq$0 encountered terminates the current case. Control is then transferred back to the READ statement for processing the next case.

3. CØMMØN STØRAGE

The variables in CØMMØN STØRAGE are those input variables (with units modified if necessary) which must be transmitted to one of the subroutines BUCKLE, MØNØC, or STIFS. Unless a modification is specified, the CØMMØN variable is precisely the input value.

626

Variable	Definition (if not directly input)
SECTN	
HTST	
HTØP	
GAMFI	GAMF
GFTAB	
EFI	EF
EFTAB	
RØF	
SGFI	SIGCYF
SGFTAB	
GAMRI	GAMR
GRTAB	
ER	
RØR	
SGRI	SIGCYR
SGRTAB	
KADHES	
PCR	
TFMIN	
TCMIN	
TCMAX	
RØCMIN	
RØCMAX	
GAMBAR	
CBAR	
WHS	
G	
HS	
EM	
EN	
NFAC	
NTERM	
EPS	
RNI	12. · RN
RSNI	12.· RSN
THNR	THN · (π /180)
RAI	12. · RA
THAR	THA · (π /180)
THCR	THC · (π /180)
RBI	12. · RB for RB> 0; 12. *RC for RB$\leq$ 0.
RSBI	12. · RSB
THBR	THB · (π / 180)
RCI	12. · RC
RSCI	12. · RSC
XLCI	12. · LC

RTI	12.*RT
BETA	
A	
TH2G	
TH3G	
RØRG	
SIGRG	
DTHDY	
DELTAU	
EMISTR	
QCMULT	
QRMULT	
XN	
XØ	
XA	
XC	
TEMPI	
TEMPA	
X	
R	
TTAB	
CPTAB	
TIME	
HTBL	
QTBL	
RTBL	
TINITL	TINIT if TINIT>0; TEMPI if TINIT $\leq$ 0
TSTØP	
NTAU	Number of values in TIME array
DELK1	
DELK2	
JJJ	Index of current vehicle section
IGØ	SECTN (JJJ), ie identification of current section
DPC	GAMBAR*CBAR
BT	Table of geometric parameter β
T1T	Table of t_1
T3T	Table of t_3
T4T	Table of t_4

C. SUBRØUTINE CALLING SEQUENCES

1. NØSE	Variable	Input or Output	Variable	Input or Output
	R	INPUT	WØPT	OUTPUT
	THETA	INPUT	W	OUTPUT
	PCR	INPUT	WT	OUTPUT
	GAMF	INPUT	TFUSED	OUTPUT
	EF	INPUT	TCUSED	OUTPUT

1. NØSE	Variable	Input or Output	Variable	Input or Output
(Cont'd)				
	RØF	INPUT	SIGMH	OUTPUT
	SGF	INPUT	ICHK	OUTPUT
	GAMR	INPUT		OUTPUT
	SGR	INPUT		
	RØR	INPUT		
	TCMX	INPUT		
	TCMN	INPUT		
	TFMN	INPUT		
	RØMX	INPUT		
	RØMN	INPUT		
	ZK	INPUT		
	WHS	INPUT		
	G	INPUT		
	IGØ	INPUT		
	TCY	ØUTPUT		
	RØC	ØUTPUT		
2. CØNE				
	GAMF	INPUT	WHS	INPUT
	EF	INPUT	G	INPUT
	RØF	INPUT	SINTH	INPUT
	SGF	INPUT	CØSTH	INPUT
	GAMR	INPUT	IGØ	INPUT
	SGR	INPUT	DELZ1	INPUT
	RØR	INPUT	DELZ2	INPUT
	PCR	INPUT	TCY	ØUTPUT
	DPC	INPUT	RØC	ØUTPUT
	ZK	INPUT	WØPT	ØUTPUT
	RØMX	INPUT	W	ØUTPUT
	RØMN	INPUT	WT	ØUTPUT
	TCMX	INPUT	TFUSED	ØUTPUT
	TCMN	INPUT	TCUSED	ØUTPUT
	TFMN	INPUT	SIGMH	ØUTPUT
	BT	INPUT	SIGH	ØUTPUT
	T1T	INPUT	SIGM	ØUTPUT
	T3T	INPUT	ICHK	ØUTPUT
	T4T	INPUT		
	R1	INPUT		
	R2	INPUT		
3. CYLIND				
	RC	INPUT	TCY	ØUTPUT
	GAMF	INPUT	RØC	ØUTPUT
	EF	INPUT	WØPT	ØUTPUT
	RØF	INPUT	W	ØUTPUT

3. CYLIND (Concl'd)	Variable	Input or Output	Variable	Input or Output
	SGF	INPUT	WT	ØUTPUT
	GAMR	INPUT	TFUSED	ØUTPUT
	SGR	INPUT	TCUSED	ØUTPUT
	RØR	INPUT	SIGMH	ØUTPUT
	PCR	INPUT	SIGH	ØUTPUT
	DEL	INPUT	SIGM	ØUTPUT
	RØMN	INPUT	ICHK	ØUTPUT
	RØMX	INPUT		
	TCMN	INPUT		
	TCMX	INPUT		
	TFMN	INPUT		
	ZK	INPUT		
	DPC	INPUT		
	WHS	INPUT		
	G	INPUT		
	DELK1	INPUT		
	DELK2	INPUT		
4. BASE				
	RT	INPUT	RØC	ØUTPUT
	GAMF	INPUT	ICHK	ØUTPUT
	RØF	INPUT		
	RØR	INPUT		
	SGF	INPUT		
	SGR	INPUT		
	PCR	INPUT		
	RØMX	INPUT		
	RØMN	INPUT		
	TCMX	INPUT		
	TCMN	INPUT		
	TFMN	INPUT		
	ZK	INPUT		
	WHS	INPUT		
	G	INPUT		
	WØPT	ØUTPUT		
	W	ØUTPUT		
	WT	ØUTPUT		
	TFUSED	ØUTPUT		
	TCUSED	ØUTPUT		
5. TENSIØN				
	BETA	INPUT		
	RC	INPUT		
	RSC	INPUT		
	RSN	INPUT		
	RN	INPUT		

5. TENSIØN (Concl'd)	Variable	Input or Output	
	PCR	INPUT	
	THN	INPUT	
	SIGCYF	INPUT	
	RØF	INPUT	
	WTENST	ØUTPUT	
	WTT	ØUTPUT	
	AT	ØUTPUT	
	T3	ØUTPUT	
	WR	OUTPUT	
	RR	ØUTPUT	
	TR	ØUTPUT	
	WSCST	ØUTPUT	
	ER	INPUT	
	RØRG	INPUT	
	SIGRG	INPUT	
	TFMN	INPUT	

6. GNRLSH	Variable	Input or Output	Variable	Input or Output
	X	INPUT	TFMN	INPUT
	Y	INPUT	DTHDY3	INPUT
	A	INPUT		
	SIGCYF	INPUT		
	RØF	INPUT		
	TH2D	INPUT		
	TH3D	INPUT		
	PCR	INPUT		
	RØRG	INPUT		
	ER	INPUT		
	SIGRG	INPUT		
	RSC	INPUT		
	RC	INPUT		
	WR	ØUTPUT		
	TR	ØUTPUT		
	RR	ØUTPUT		
	WSCST	ØUTPUT		
	T3	ØUTPUT		
	WGENST	ØUTPUT		
	WTG	ØUTPUT		
	AG	ØUTPUT		

7. RING			
	THD	INPUT	
	R3	INPUT	
	T3	INPUT	
	RSC	INPUT	

7. RING (Concl'd)	Variable	Input or Output		
	ER	INPUT		
	SIGRG	INPUT		
	RC	INPUT		
	SIGCYF	INPUT		
	RØRG	INPUT		
	WR	ØUTPUT		
	RR	ØUTPUT		
	TR	ØUTPUT		
	WSCST	ØUTPUT		
8. HØTSTR	Variable	Input or Output	Variable	Input or Output
	XN	INPUT	W	INPUT
	XØ	INPUT	WSTAR	ØUTPUT
	XC	INPUT		
	XA	INPUT		
	TTAB	INPUT		
	TEMPI	INPUT		
	NTAU	INPUT		
	TAU	INPUT		
	TAUMAX	INPUT		
	QC	INPUT		
	QR	INPUT		
	HGØRT	INPUT		
	FR	INPUT		
	FC	INPUT		
	CPTAB	INPUT		
	DELTAU	INPUT		
	EMISS	INPUT		
	TEMPA	INPUT		
	EPS	INPUT		
	TAUT	ØUTPUT		
	TW	ØUTPUT		

D. SUBROUTINES, DESCRIPTIØNS

1. Subroutine BUCKLE

a. Purpose

The purpose of subroutine BUCKLE is to control the computation of the structure weights for sections having a honeycomb construction, and to provide the program output for those sections.

b. Method

Subroutine BUCKLE receives all of its input data from the main program through CØMMØN. It does not redefine any of this data, or transmit any information back to the main program.

At the first executable statement of BUCKLE the variable ICHK is set to 12345. Any subsequent change in ICHK will be an indication of computational difficulty, and appropriate action will be taken to inform the user of the situation (error messages and the deletion of further computation on the particular section). PI is defined, and the identification number of the current section is written on the output tape, logical tape 6.

There are two possible paths for the computation to take, depending on whether or not the section is to be run under the hot structures option (for which HTST is input as 1.)

If HTST $\neq$ 1, control is transferred immediately to statement 250 where a computed GØ TØ on the section number picks the correct method of computing the weight. For all sections but tori the appropriate data is supplied to one of the subroutines NOSE, CONE, TENSON, GNRLSH, CYLIND, or BASE which will carry out the actual computation. For the tori, which cannot in reality be handled by the program, the unit section weight is taken as the weight of the immediately preceding section; however, this weight is then multiplied by the torus area in finding the total weight. The weights, face sheet and core thicknesses, and core densities are placed in arrays from which they are finally printed on the output tape. For tori the weights are printed between statements 21 and 25, and return is made to the main program. For the other sections the block of statements between 255 and 2684 provides for writing all the output. This block is entered either at statement 255 or 260 after the return from the particular section subroutine. The computed GØ TØ at 261 controls setting up the correct headings to print only the information applicable for a particular section. The IF test at statement 2645 checks for nonconvergence of the weight iteration. If nonconvergence is detected, an error message is written. Return is then made to the main program.

In the case of a hot structure not only does the final weight depend upon the temperature rise computed by the program, but the material properties used in the honeycomb analysis are themselves a function of temperature. This second dependence makes an iterative scheme necessary to handle the weight computation. The numerical method

used is standard false position applied to the temperature, the initial guesses being TINIT and TEMPA. To ensure convergence it is necessary that the actual temperature lie between TINIT and TEMPA. (If TINIT is not specified, it is taken to be TEMPI.) At Statement 230 the temperature TEMP is set to TINIT to start the process. Then NN (the number of iterations), WQ, and FTMP1 are initialized. At 245 the material properties corresponding to TEMP are looked up in tables EFTAB, SGFTAB, GFTAB, GRTAB, and SGRTAB, and control is transferred to the appropriate subroutine for a weight computation. After a transfer back to 260 the hot structures option switches control to 269 where subroutine HØTSTR calculates the maximum temperature TWMAX and, if necessary, the increased weight WQ. After the return form HØTSTR an IF test checks the difference between the original temperature TEMP and TWMAX. If the relative difference is less than 1 percent the iteration is terminated immediately, and control is passed to the output block at Statement 261. If the difference is greater than 1 percent, control is passed back to Statement 240 where NN is updated. The statements following 240 provide, in general for saving the last two temperature estimates TMP1 and TMP2 which bracket the root, along with the differences FTMP1 and FTMP2 between these estimates and their corresponding values of TWMAX. On this first pass TMP1 and FTMP1 are presumably set to TINIT and TINIT-TWMAX. A second pass is then made through the entire computation sequence with TEMP set to the value TEMPA. At 242 TMP2 will be set to TEMPA and FTMP2 to TEMPA-TWMAX. Then the false position algorithm computes a new projected temperature from TMP1, TMP2, FTMP1, and FTMP2 at statement 2425, and tests to make sure that TEMPA is not exceeded. (A value of TEMP>TEMPA results in an error message and return to the main program.) The iteration now continues until the relative difference between TEMP and TWMAX is less than 1 percent. The results are then printed and a return is made to the main program. (If convergence has not occurred within 10 iterations, the process is terminated and the last values printed out.)

2. Subroutine MØNØC

a. Purpose

The purpose of subroutine MØNØC is to calculate the structure weights of those sections having a monocoque construction and to provide the program output for these sections.

b. Method

Subroutine MØNØC receives all of its input data from the main program through CØMMØN. It does not redefine any of this data, or transmit any information back to the main program.

Like BUCKLE subroutine MØNØC can be called either with or without the hot structures option. However, unlike BUCKLE, MØNØC can handle a vehicle section only if it is a spherical cap or flat base (i.e. one of Sections 1, 12, or 13).

If HTST 1, there is a single level search performed for the weight, taking account of the inertia of the heat shield and structure. After the section number has been written out, control switches down to Statement 250 where an initial value of the unit weight WSTAR is computed using minimum gage thickness, and NIT, the number of iterations, is initialized. The computed GØ TØ on the section number results in an error message and return for any section other than 1, 12, or 13.

For the nose sphere or aft sphere the radius R, the shell height H, and a sign factor PFAC are set at statements 1 and 12, respectively. For either of these sections transfer is then made to Statement 300 where SMATM, an expression appearing in the pressure computations, is calculated, and the face sheet thickness SMAT is set initially to minimum gage. The search method between Statements 400 and 600, looks for a change of sign (from positive to negative) of the expression PCR-PTEST. Until such a change is detected, the statements are repeated with SMAT being increased by the factor EPSP1 (1+f). A value of WSTAR is computed to correspond to each SMAT. (A maximum of 500 such increases in SMAT is allowed before an error message and return terminates calculations for the section.) Once the sign change has been detected, a final value of pressure P and yield thickness TY are calculated beginning at Statement 750. The final thickness is taken as the maximum of SMAT and TY, and WSTAR is again computed using this maximum. The total weight W and yield stress criteria SIGMH are then computed. Transfer is made to Statement 850 for the printout of results and return to the main program.

In the case of a flat base a first order iteration scheme is used to compute the unit weight rather than a search. The radius R is set to RT, and the initial estimate for WSTAR (using minimum gage thickness) is stored in W1. W1 will be used to keep track of the last previous iterate, and thus updated on each pass. The pressure and face sheet thickness are computed. An IF test ensures that the thickness is at least minimum gage, and a new weight WSTAR is calculated at Statement 132. If the relative difference between W1 and WSTAR is less than 1 percent, the last value of WSTAR is taken as the unit weight and a transfer is made to Statement 137 for the computation of the total weight, printout of results, and return to the main program. If the difference is greater than 1 percent transfer is made back to Statement 130 for the next iteration. Failure attain convergence within 25 iterations results in an error message at Statement 136 and return to the main program.

If HTST = 1, the same false position iteration scheme used in subroutine BUCKLE finds the weight as a function of temperature. This iteration is performed outside the iteration or search described above, thus making the entire iterative scheme a two-level process. The call to subroutine HØTSTR is now at Statement 810.

3. Subroutine STIFS

a. Purpose

The purpose of subroutine STIFS is to calculate the structure weights of those sections having a ring-stiffened construction, and to provide the program output for these sections.

b. Method

Subroutine STIFS receives all of its data from the main program through CØMMØN. It does not redefine any of this data, or transmit any information back to the main program.

STIFS can be called with or without the hot structures option. It handles a vehicle section that is a cone, cylinder, flare forecone, or aftcone (Sections 3, 7, 8, 11). At Statement 200 a computed GØ TØ tests that the current section is indeed one of these four. If not, a transfer to Statement 2000 results in an error message and immediate return to the main program. If the section can be handled, values of R1, R2, RTHETA, and XKFAC are calculated from the appropriate geometry parameters, beginning at one of the Statements 5551, 5552, 5553, or 5554. Transfer is then made to Statement 5555 where several variables depending on the vehicle geometry are calculated, and the section number and a heading are written out. The program flow beyond Statement 65 depends upon whether or not the section is a hot structure, and whether HTØP has been specified as 1. or 2.

Consider first the case HTST = 0, HTØP = 1. The object will be to find a thickness (t) satisfying both local and general stability conditions and a number (N) of rings which will minimize the structure weight. Since the inertia of the heat shield and structure are to be taken into consideration, an iterative method is again necessary in the weight calculations. In STIFS this iteration is carried out for each number (N) of rings considered.

Since HTST = 0, the test following Statement 65 transfers control down to 68 where N, the current number of rings, is set to 1 (although the N = O case will actually be handled first), and the control parameters ITEST and IGØTØ are initialized to 1. Since HTØP = 1, H is set to

the input value HS. Between Statements 683 and 9 an additional block of variables is initialized including TL the thickness required for local stability, TG the thickness required for general stability, and SMAT, which is always the current thickness being used in the calculations. The block of statements between 9 and 15 performs the major computations of the routine.

Initially the case N = O is considered. (The routine recognizes this case by the fact that ITEST is still 1.) The computed GØ TØ before Statement 155 transfers control to 155 where PAS, the pressure just computed at Statement 15 is tested against the input value PA(PCR). If PA>PAS, TG is increased by the factor EPSP (1. + EPS), SMAT is set equal to TG and a transfer back to statement 12 begins a repetition of the computations. The loop thus formed is retraced until finally PAS $\geq$ PA, the variable M keeping track of the number of iterations. At Statement 17 the total weight WN and the unit weight WSTAR are calculated as a function of the current TG.

The computed GØTØ at Statement 20 transfers control to 28 since IGØTØ is still 1. Here the first order iteration procedure necessitated by structural inertia considerations tests for convergence of the unit weight WSTAR. WSTAR is compared with W1, the last previous iterate. (W1 was initialized to 0. just after Statement 5555 to take care of the first pass.) Ten iterations are allowed for obtaining convergence of the weight. On each iteration the looping process to obtain TG is repeated. The transfer back to statement 85 ensures that all the necessary reinitialization is included. Convergence is defined as a relative difference of less than 1 percent between W1 and WSTAR. If convergence is not reached within 10 iterations, an error message is written at Statement 295, and return is made to the main program. If convergence is attained, IGØTØ is reset to 2 at Statement 301.

The block of statements between 302 and 312 calculates the yield stress criteria. If the section is one of the cones, its entire length must be searched for the point of maximum allowable stress XNYMAX. XNYMAX is initially set to 0, and R to R2, the largest value of the cone radius. In the DO 305 loop a value of XNY is calculated at each of 10, equally-spaced points along the length of the cone as R decreases to R1, the smallest cone radius. XNYMAX is defined as the maximum of the 10 XNY values obtained in the loop. Values of XNTH and XNPHI to be used in evaluating the stress components are also calculated corresponding to XNYMAX. If the section is a cylinder, XNTH, XNPHI, and XNYMAX are evaluated directly. In either case TCY, the minimum thickness satisfying yield requirements, is calculated at Statement 308, and tested against TG. If TCY>TG, TG is reset to TCY, and the weights must be recalculated at Statement 17 to

correspond to the new thickness. In this case the computed GØTØ brings control back to Statement 312 since IGØTØ is now 2. Here the stress component calculations are completed, the minimum weight WGTMIN is set to the current weight value, TL is set equal to TG, and the N = O results are printed. (ISW was set to 1 following Statement 5555, since HTST = O).

At 321 the N = 1 case is begun. (Statement 32 which ordinarily will compute the next N is skipped since N was set to 1 at the beginning of the routine.) The IF test on DN checks to see that the maximum number of rings is not exceeded. Initializations are completed, ITEST is set to 2 and IGØTØ to 3, and control is transferred back to the computation block at Statement 10. The computed GØTØ with ITEST = 2 chooses the test at Statement 16. This test and the statements starting at Statement 36 decrease TL (which was set to the TG obtained for the last N) by the factor EPSM**M$((1.-EPS)^{M})$, until PA $\geq$ PAS or TL < TM. The weights are then computed at Statement 17, and the transfer to Statement 37 (IGØTØ = 3) sets up conditions for the general stability calculations. By the time the transfer back to Statement 9 takes place ITEST has been reset to 1 and IGØTØ to 4. The same general stability loop is repeated as in the O-ring case, TG being increased by EPSP until PAS $\geq$ PA.

The transfer from Statement 20 is now to Statement 39 where the first order iteration is begun for the N = 1 case. Both the TL and TG loops must be repeated for each iteration, as is indicated by the transfer to Statement 322 each time the relative difference between W1 and WSTAR is greater than 1 percent. When convergence has been attained, the stress calculations are repeated starting at Statement 302, but with IGØTØ now 5. Thus, when the stress calculations have been completed, the test on IGØTØ before Statement 318 brings control down to Statement 397 where the current weight is tested against WGTMIN the running minimum. WGTMIN is reset if the current WN is smaller. The results for N = 1 are printed, and the computations for the next N are begun at statement 32 where N is calculated as a function of its current value and the input parameters NFAC and NTERM.

The computations are repeated in this same manner for each new N until N exceeds the maximum allowable value XLØ/EM/TG. Then at Statement 43 the current minimum weight is taken as the final result. The unit and total weights are printed at statement 44. and return is made to the main program.

If HTØP = 2, the stiffener height (H) is initialized to 1. at Statement 682 before the computations begin. The N = O calculations, and the

iterations for TL when N>O proceed exactly as in the HTØP = 1 case. However, when N>1 and the general stability calculations are set up starting at Statement 37, ITEST is set to 3 instead of 1. The computed GØTØ in the calculation block picks the test at 163. The object now is to find the value of H for which PA = PAS. If initially PA>PAS, ITEST is set to 5 and H is increased by the factor EPSP until a change of sign in PA-PAS occurs. (On the second and succeeding passes the test at 168 is used.) If initially PA< PAS, ITEST is set to 4, and H is decreased by the factor EPSM until a sign change in PA-PAS is detected. (On the second and succeeding passes the test at 169 is used.) Then the weight is calculated at Statement 17 as in the HTØP = 1 case. The remainder of the program logic is not affected by HTØP.

In cases where HTST = 1 false position iteration on the temperature is used in the weight calculations as in subroutines BUCKLE and MØNØC. This iteration is performed outside all the other computations carried out by the routine. The iteration loop itself extends from statement 67 to the IF test at 577. The variable ISW which has the value 2 initially, suppresses the printing of results until convergence has been achieved. Then the final iteration is repeated with ISW reset to 1 to obtain the printout.

4. Subroutine NØSE

a. Purpose

The purpose of subroutine NØSE is to calculate the honeycomb structure weights for the nosesphere and aftsphere sections (Sections 1 and 12) of the vehicle when specific geometry conditions and material properties are given.

b. Method

First order iteration is used to compute the weight, taking into account the inertia of the heat shield and structure. This iteration starts at Statement 800 after several terms that are to be constant during the looping process have been calculated, and the weights W and WØPT and the number of iterations NIT have been initialized to 0. At 800 W1 which will be the value of the last previous iterate is set equal to W. Then the pressure P, depending on W, is calculated and its sign tested.

If $P \leq 0$, the face sheet thickness and core height are taken as minimum gage. The weight (W), total weight (WT), and yield stress criteria (SIGMH) are computed, and an immediate return to the calling routine is executed.

If $P > 0$, the iteration continues. The core density (RØC) is calculated, and tested to make sure that it lies between the minimum and maximum values specified in the program input. If RØC < RØMN (RØCMIN), it is set to RØMN; if RØC > RØMX (RØCMAX), it is set to RØMX. Then TCY the face sheet thickness required to satisfy yield criteria is computed. TEST1 is defined as the larger of TCY and TFMN (TFMIN). Next TFØPT, the optimum face sheet thickness satisfying buckling criteria is computed and compared with TEST1.

Case (1). TFØPT > TEST1

Control is transferred to Statement 6 for the computation of TCØPT, the optimum core height. TCØPT is then checked to ensure that it lies between TCMN (TCMIN) and TCMX (TCMAX).

a. $TCMN \leq TC\emptyset PT \leq TCMX$

TFUSED and TCUSED are set to TFØPT and TCØPT, respectively, and the weight is computed as WØPT. (This is the only case in which WØPT is computed, and only if the final iteration computes a value of WØPT will a nonzero WØPT be returned to the calling routine.) W is set equal to WØPT and transfer is made to Statement 103.

b. TCØPT < TCMN

A value TF of the face sheet thickness is computed as a function of TCMN at Statement 7. TFUSED is defined as the larger of TF and TEST1, and TCUSED is set to TCMN. The weight (W) is then computed as a function of TFUSED and TCUSED at Statement 100.

c. TCØPT > TCMX

TFUSED is set to TFØPT and TCUSED is set to TCMX at Statement 14. Then W is computed as a function of TFUSED and TCUSED at Statement 100.

Case (2). TFØPT $\leq$ TEST1

TFUSED is set to TEST1 at Statement 16. TCUSED is computed as a function of TFUSED, then redefined as TCMN or TCMX if it lies, respectively, below or above the allowable range. (W) is then calculated at Statement 100.

In all cases the relative difference between W and W1 is checked at Statement 103. If this difference is less than 1 percent, the iteration is terminated, the total weight (WT) and the yield stress criteria (SIGMH) are computed, and a return to the calling routine is executed. If the difference is greater than 1 percent, the number of iterations NIT is updated at Statement 105, and tested against 10. If NIT < 10, a new iteration is begun at Statement 800. If NIT $\geq$ 10, ICHK is set to 1 as an error indication, and the last results obtained are returned to the calling routine.

5 Subroutine CØNE

a. Purpose

The purpose of subroutine CØNE is to calculate the honeycomb structure weights for the cone, flare fore cone, and aftcone sections (Sections 3, 8, and 11) of the vehicle, when specific geometry conditions and material properties are given.

b. Method

Subroutine CØNE uses the same first order iteration scheme used in NØSE, and the same logical procedure for obtaining the final values of TFUSED and TCUSED. (See the description of subroutine NØSE for details.) As far as program flow is concerned, the major difference

between the two routines lies in the calculation of the maximum allowable stress XNYMAX. Immediately after Statement 800 (the beginning of the iteration loop), XNYMAX is initialized to 0., and R set to R2, the maximum value of the cone radius. In the DØ 805 loop a value of XNY is calculated at each of 10 equally-spaced points along the length of the cone as R decreases to R1, the minimum cone radius. XNYMAX is defined as the maximum of the 10 XNY values obtained in the loop. For the cones the circumferential stress (SIGH) and the meridional stress (SIGM) are calculated in addition to the resultant yield stress criteria (SIGMH) (XNYMAX/(2. TFUSED)).

6. Subroutine CYLIND

a. Purpose

The purpose of subroutine CYLIND is to calculate the honeycomb structure weight for the cylindrical section (Section 7) of the vehicle, when specific geometry conditions and material properties are given.

b. Method

The logical flow of subroutine CYLIND is essentially identical to that of subroutine NØSE. The first order iteration loop extends from Statement 3 to the GØ TØ 3 statement following 250. No loop is required for the calculation of the yield stress criteria as in CYLIND. However, the circumferential stress SIGH and the meridional stress SIGM are computed along with SIGMH before the return to the calling routine.

7. Subroutine BASE

a. Purpose

The purpose of subroutine BASE is to calculate the honeycomb structure weight for the BASE section (Section 13) of the vehicle, when specific geometry conditions and material properties are given.

b. Method

The first order iteration scheme is the same as in subroutine NØSE. The iteration loop starts at Statement 800 and ends at 240. However, the procedure for obtaining TFUSED and TCUSED is somewhat simpler since no-face sheet thickness is computed to satisfy yield criteria. TFUSED is defined on each iteration as the larger of TFØPT and TFMN (TFMIN). TCUSED, after being calculated as a function of TFUSED, is tested against TCMN (TCMIN) and TCMX (TCMAX). If TCUSED < TCMN it is redefined to be TCMN; if TCUSED > TCMX, it is redefined

as TCMX. In either of these two cases TFUSED is then redefined to correspond at Statement 9.

8. Subroutine TENSØN

a. Purpose

The purpose of subroutine TENSØN is to compute the structural weight and area of the tension shell (Section 4).

b. Method

Simpson's rule is used to calculate the total weight WTT and the area AT. In the DO 60 loop the integrands W and A are calculated at 25 equally-spaced points between the initial angle BETA and $\pi/2$. Subroutine ARSIMP is then called twice to apply the Simpson's Rule formula. The unit weight WTENST is calculated as the total weight divided by the area, and subroutine RING is called to obtain the structural weight thickness and radius of the compression ring. Return is then made to the calling routine.

9. Subroutine GNRLSH

a. Purpose

The purpose of subroutine GNRLSH is to compute the structural weight and area of the general shell (Section 5).

b. Method

The Trapezoidal rule is used to calculate the total weight WTG and the area AG. In the 3-statement loop starting at Statement 10 the number of values of the coordinates X and Y which have been input are counted. The counting procedure assumes that a 0. follows the last value of the Y array. (Therefore, special care must be taken in stacking cases). Between Statements 123 and 60 an array AFUNCT of integrands for the area and an array WFUNCT of integrands for the total weight are generated. (Each element in these arrays corresponds to a point in the original X and Y arrays.) The trapezoidal rule is applied to AFUNCT and WFUNCT in the 5 statements starting at 61. The results of the integration WTG and AG are multiplied by appropriate factors, and the unit weight WGENST is calculated. A call to subroutine RING obtains the structural weight, thickness, and area of the compression ring. Return is then made to the calling routine.

10. Subroutine RING

a. Purpose

The purpose of subroutine RING is to compute the structural weight, thickness, and radius of the compression ring.

b. Method

Straightforward evaluation of the formulas in arithmetic statements.

11. Subroutine HØTSTR

a. Purpose

The purpose of subroutine HØTSTR is to compute the maximum structural temperature TWMAX, and increase the structure weight if necessary to ensure that TWMAX is no greater than the input value TEMPA.

b. Method

Starting with W supplied by the calling routine, the initial temperature TEMPI, and the initial time value TAU(1) (input as TIME (1)), the routine calculates the temperature rise DELTAT in successive intervals of time (each of length DELTAU). The heating factors QCI, QRI, and HGØRI which are used in the expression for DELTAT are looked up in tables QC, QR, and HGØRT (input as QTBL, RTBL, and HTBL, respectively) for each new point in time. Should TAUMAX (TSTØP) be specified as larger than the final value of the TAU table, these heating factors are set to 0. in the region beyond the ends of the tables.

After DELTAT has been computed, its sign is tested to check for a change from positive to negative, signifying a maximum temperature point. If DELTAT is initially negative, two sign changes must be encountered before it is assumed that the maximum temperature has been found. The computed GØ TØ controlled by IDEL at Statement 40 handles such a case.

If a particular value of DELTAT is positive, of if DELTAT is negative, but there has been no previous positive value, the current time TAUT in increased by DELTAU, and checked to make sure that it is less than TAUMAX.

If TAUT < TAUMAX, TW the current temperature is computed at Statement 60, and checked against TEMPA. If TW < TEMPA, the transfer to Statement 25 continues the process at the new time value. If TW $\geq$ TEMPA, WSTAR, the current weight, is increased by the factor EPSP1 (1. + EPS), and the process is restarted at the initial point in time and temperature.

If TAUT $\geq$ TAUMAX, (i.e., no maximum is found within the specified time interval), the temperature and weight at the final time point are taken as the result. A return to the calling routine is executed.

When a change in the sign of DELTAT from positive to negative is detected, an immediate return is made to the calling routine with the current values of weight, time, and temperature.

E. SIGNIFICANT EQUATIONS

1. MAIN Program

DPC = GAMBAR · CBAR

2. BUCKLE

$$TEMP = TMP1 - FTMP1\left(\frac{TMP1 - TMP2}{FTMP1 - FTMP2}\right)$$

(False position algorithm for hot structures temperature iteration.)

3. MONOC

$$TEMP = TMP1 - FTMP1\left(\frac{TMP1 - TMP2}{FTMP1 - FTMP2}\right)$$

a. Spherical Caps

nose sphere R = RN H = R(1 − sin(THN))

aftsphere R = RA H = R(1 + sin(THA))

$$PTEST = \pm \frac{(WHS + WSTAR)G}{144} + E\left(\frac{SMAT}{SMATM}\right)^{7/3}$$

where SMAT is the current t_f.

$$SMATM = 1\,2\,(1 - XNU^2)^{2/7} \left(\frac{H}{R}\right)^{1/7} R$$

$$WSTAR = \frac{RH\emptyset \cdot SMAT}{12}$$

$$P = PCR \pm \frac{(WHS + WSTAR)\,G}{144}$$

$$TY = \frac{P \cdot R}{2 \cdot SGF}$$

$$SIGMH = \left[- PCR \pm \frac{(WHS + WSTAR)\,G}{144} \right] \frac{R}{2 \cdot SMAT}$$

$$W = \frac{WSAR\,(2\pi)\,H \cdot R}{144}$$

b. base

$$P = PCR + \frac{(WHS + WSTAR)\,G}{144}$$

$$SMAT = \left[\frac{0.375\,(R)^2\,P\,(3 + XNU)}{SGF} \right]^{1/2}$$

$$WSTAR = \frac{RH\emptyset \cdot SMAT}{12}$$

$$W = \frac{WSTAR \quad \pi R^2}{144}$$

4. STIFS

$$TEMP = TMP1 - FTMP1 \left(\frac{TMP1 - TMP2}{FTMP1 - FTMP2} \right)$$

$$BETAG = 1 - \frac{R1}{R2}$$

$$BETA = \frac{BETAG}{DN + 1}$$

$$XL\emptyset = \begin{cases} \frac{R2 - R1}{SINT} & \text{Cones} \\ XLC & \text{Cylinder} \end{cases}$$

$$TTT = (8 \cdot T1 \quad T3 \cdot T4)^{1/4}$$

$$XK = R2 \left(1 - \frac{BETA}{2} \right) \Big/ C\emptyset ST$$

$$XK1 = \frac{XK^3}{2 \left(1 - \frac{BETA)}{2} \right)^2} [GAMBAR + BETA (1 - 2 \cdot GAMBAR)$$

$$+ BETA^2 (GAMBAR - 0\ 61600607) + \frac{XL}{R2} XKTM (1 - 0.61600607 \quad BETA)]$$

$$+ DELK1$$

$$XK2 = XK (1 + XKTM \cdot SINT) + DELK2$$

where,

$$XKTM = \pm \frac{(WHS + W) G}{144 \cdot PA}$$

$$B = \frac{2\pi \cdot XK1 \quad TTT}{XL [12(2 \quad T3 - XNU^2)]^{1/4} \quad XK^{3/2} \cdot XK2}$$

$$S = B(DTH\emptyset D)^{1/4}\,(SMAT)^{1/2}$$

$$PS = \frac{WS1 + 1}{(WS1)^{1/2}\left(WS1^{1/4} + \frac{S}{2}\right)}$$

where,

$$WS1 = \frac{3 + S}{1 + S}$$

$$RH\emptyset T = \frac{R\emptyset F \quad SMAT}{1728}$$

$$WS2 = 1 - XNU^2$$

$$PAS = \frac{\pi(PS)\,(DTH\emptyset D)^{3/4} \cdot T4\,(SMAT)^{5/2}\,[12\,(2 \quad T3 - XNU^2)]^{1/4} \cdot E}{6\,(WS2)\,XL \quad XK2 \cdot XK^{1/2} \cdot TTT}$$

$$WN = \pi \cdot RH\emptyset T\left[(R1 + R2)\,XL\emptyset + 2 \cdot H(2 \cdot EN + 1) \cdot DN \cdot \left(R2 - XL\emptyset \cdot \frac{SINT}{2}\right)\right]$$

$$WSTAR = \frac{WN \cdot 144}{PI(R1 + R2)\,XL\emptyset}$$

cones:

$$XNTH = \left[-PA \mp \frac{(WHS + WSTAR) \cdot G \cdot SINT}{144}\right] \quad \frac{R}{C\emptyset ST}$$

$$XNPHI = \left[-PA\left(R^2 + R1^2\,(GAMBAR - 1)\right) \mp \frac{G(R^2 - R1^2)\,(WHS + WSTAR)}{144 \quad SINT}\right]\frac{1}{2 \cdot R \cdot C\emptyset ST}$$

$$XNY = [(XNTH)^2 + (XNPHI)^2 - XNTH \cdot XNPHI]^{1/2}$$

XNYMAX is the largest value of XNY. XNTHM, XNPHIM correspond

cylinders:

$$XNTHM = -PA \quad RC$$

$$XNPHIM = -\frac{PA \quad RC \quad GAMBAR}{2} - \frac{G \cdot XLC\,(WHS + WSTAR)}{144}$$

$$XNYMAX = [(XNTHM)^2 + (XNPHIM)^2 - XNTHM \cdot XNPHIM]^{1/2}$$

$$TCY = \frac{XNYMAX}{SGF}$$

$$SIGMH = \frac{XNYMAX}{TG}$$

$$SIGH = \frac{XNTHM}{TG}$$

$$SIGM = \frac{XNPHIM}{TG}$$

$$D = \frac{E \cdot TLC}{12 \cdot WS2}$$

$$THT = TL \cdot H\,(2 \cdot EN + 1)$$

$$AT = THT + EM \cdot TLS$$

$$YBAR = \left[\frac{EM \cdot TLC}{2} + THT\left(\frac{H}{2} + TL\right)\right]\frac{1}{AT}$$

$$XIX = \frac{EM \quad TLC \cdot TL}{3} + THT\left(\frac{H}{2} + TL\right)^2 + (EN \quad H + TL)\frac{H^3}{12}$$

$$- \frac{EN \cdot H\,(H - 2 \cdot TL)^3}{12}$$

$$XITH = XIX - AT \cdot YBAR^2$$

$$DTH = \frac{(DN + 1) \cdot XITH \cdot E}{XL\emptyset}$$

$$DTH\emptyset D = \frac{DTH}{D}$$

5. NØSE

$$H = R\left(1 - \sin(THEATA)\right)$$

$$P = PCR \pm \frac{(WHS + W)\, G}{144}$$

$$\rho_c = R\emptyset C = 0\ 22 \cdot R\emptyset R \left(\frac{P}{SGR}\right)^{0\ 588}$$

$$t_{cy} = TCY = \frac{P \cdot R}{4(SGF)}$$

$$Z1 = \frac{R\emptyset F}{6}$$

$$Z2 = Z2T \cdot R\emptyset C \cdot P^{3/4}$$

where,

$$Z2T = \frac{0.465\ \sqrt{1 - GAMF^2}\ \cdot H^{1/4} \cdot R^{3/2}}{12 \cdot EF^{3/4}}$$

$$t_{fopt} = TF\emptyset PT = \left(0.75\ \frac{Z2}{Z1}\right)^{4/7}$$

$$t_{copt} = TC\emptyset PT = \frac{12 \cdot Z2}{R\emptyset C}\ \left(\frac{4}{3}\ \frac{Z1}{Z2}\right)^{3/7}$$

650<

$$t_f = \text{TSUBF}(TC) = \frac{TFTM \cdot P}{TC^{4/3}}$$

where,

$$TFTM = \frac{0.36(1-GAMF^2)^{2/3}\ H^{1/3} \cdot R^2}{EF}$$

$$t_c = \text{TSUBC}(TF) = TCTM \left(\frac{P}{TF}\right)^{3/4}$$

where,

$$TCTM = \frac{0.465\sqrt{1-GAMF^2}\ \ H^{1/4}\ \ R^{3/2}}{EF^{3/4}}$$

$$W = \text{WEIGT}(TF, TC) = Z1 \cdot TF + \frac{R\emptyset C \cdot TC}{12} + ZK$$

$$WT = W \cdot \frac{\pi R^2}{72}\left(1 - \sin(THETA)\right)$$

$$SIGMH = \left[-PCR \mp \frac{(WHS + W)G}{144}\right] \frac{R}{4\ TFUSED}$$

where TFUSED is the value of t_f chosen by the routine.

6. CØNE

$$B = 1 - \frac{R1}{R2}$$

$$ZLAMD = \frac{\pi \cdot SINTH}{R2 \cdot B}$$

$$ZLILK = \frac{R1 + R2}{2\ C\emptyset STH}$$

$$R\emptyset C = 0.22 \cdot R\emptyset R \left(\frac{PCR}{SGR}\right)^{0.588}$$

$$XNTH = \left[-\dot{PCR} \mp \frac{(WHS + W)\, G \quad SINTH}{144}\right] \frac{R}{C\emptyset STH}$$

$$\dot{XNPHI} = \frac{\dot{1}}{2R \cdot C\emptyset STH}\left[-\dot{PCR} \quad (R^2 + \dot{R1^2} \cdot (\dot{DPC} - \dot{1})) \mp \frac{G\,(R^2 - \dot{R1^2})(WHS + W)}{144\ SINTH}\right]$$

$$\dot{XNY} = \sqrt{(XNTH)^2 + (\dot{XNPHI})^2 - XNTH \quad \dot{XNPHI}}$$

$$TCY = \frac{XNYMAX}{2 \cdot SGF}$$

where XNYMAX is the largest value of XNY.

$$Z2 = ZLILK\,(1 + ZTERM \cdot SINTH) + DELZ2$$

where,

$$ZTERM = \frac{(WHS + W)\, G}{144 \quad PCR} \quad .$$

$$\dot{Z1} = ZLILK^3\left[\dot{DPC} + B\,(\dot{1} - 2 \cdot \dot{DPC}) + B^2\,(\dot{DPC} - 0.\dot{61600607})\right.$$

$$\left. \mp \frac{B \cdot ZTERM \cdot (\dot{1} - 0.\dot{61600607} \cdot B)}{SINTH}\right] \frac{\dot{1}}{2\left(\dot{1} - \frac{B}{2}\right)^2} + \dot{DELZ1}$$

$$A = ATM\left(\frac{Z1}{Z2}\right)$$

where,

$$ATM\ \frac{ZLAMD}{ZLILK^{3/2}}\left(\frac{2 \cdot TI \cdot T3 \cdot T4}{2\ \ T3 - GAMF^2}\right)^{1/4}$$

$$P = PTM\left(\frac{Z1}{Z2}\right)^2 \cdot Z1$$

where,

$$PTM = \frac{32 \cdot T1\ \ T3 \cdot ZLAMD^2}{(ZLILK)^5}\left(\frac{1 - GAMF^2}{2 \cdot T3 - GAMF^2}\right)\left(\frac{PCR}{EF}\right)$$

$$C1 = \frac{P \cdot ZLILK\ \ R\emptyset F}{111.9\ A^{2\ 84}}$$

$$C2 = \frac{R\emptyset C}{12}$$

$$t_{fopt} = TF\emptyset PT = \frac{4\ 89}{ROF}\ (C1)^{0.414} \cdot (C2)^{0.586}$$

$$t_{copt} = TC\emptyset PT = 1.156\left(\frac{C1}{C2}\right)^{0.414}$$

$$t_f = TSUBF\ (TC) = \frac{P\ \ ZLILK}{18.6\ (A\sqrt{TC})^{2.84}}$$

$$t_c = TSUBC\ (TF) = 0.127\left(\frac{P\ \ ZLILK}{TF\ \ A^{2.84}}\right)^{0.704}$$

$$WEIGT\ \ (TF, TC) = \frac{R\emptyset F \cdot TF}{6} + \frac{R\emptyset C\ \ TC}{12} + ZK$$

$$WT = \frac{\bar{W}(R1 + R2)(R2 - R1)\pi}{SINTH \quad 144}$$

$$\bar{SIGMH} = \frac{XNYMAX}{2 \cdot TFUSED}$$

$$\bar{SIGH} = \frac{XNTHM}{2 \quad TFUSED}$$

$$SIGM = \frac{XNPHIM}{2 \cdot TFUSED}$$

where TFUSED is the value of t_f chosen by the routine.

7. CYLIND

$$\rho_c = R\emptyset C = 0.22(R\emptyset R)\left(\frac{\bar{PCR}}{SGR}\right)^{0.588}$$

$$X2 = \frac{R\emptyset C}{12}$$

$$\bar{X1} = \frac{\bar{X1T}}{PB}$$

where,

$$\bar{PB} = \frac{(ST + \bar{1})}{\sqrt{ST}\left(\bar{ST}^{1/4} + \frac{S}{2}\right)}\left(\bar{1} + \frac{DELK2}{RC}\right)$$

$$ST = \frac{3+S}{1+S}$$

$$XNTH = -\bar{PCR} \cdot RC$$

$$\bar{XNPHI} = -\frac{\bar{PCR} \cdot RC \quad \bar{DPC}}{2} - \frac{G\,(DEL)\,(WHS + W)}{144}$$

$$XNY = [(XNTH)^2 + (XNPHI)^2 - (XNTH)(XNPHI)]^{1/2}$$

$$t_{cy} = TCY = \frac{XNY}{2(SGF)}$$

$$t_{fopt} = TF\emptyset PT = \frac{4.7(X1)^{0.4}(X2)^{0.6}}{R\emptyset F}$$

$$TC\emptyset PT = 1.176\left(\frac{X1}{X2}\right)^{0.4}$$

$$S = STM(TCUSED)^{1/2}\left[DPC + \frac{DELK1}{RC^3} + \frac{DEL(WHS + W)G}{(RC)(144)(PCR)}\right]$$

where,

$$STM = \frac{2.22(RC)^{1/2}}{DEL(1 - GAMF^2)^{1/4}\left(1 + \frac{DELK2}{RC}\right)}$$

$$t_f = TSUBF(TC) = \frac{TFTM}{(TC)^{3/2}(PB)}$$

where,

$$TFTM = \frac{PCR(RC)^{3/2}(DEL)(1 - GAMF^2)^{3/4}(0.45219638)}{EF}$$

$$t_c = TSUBC(TF) = \frac{TCTM}{(TF\ PB)^{2/3}}$$

where,

$$TCTM = 0.404\left[\frac{PCR(RC)^{3/2}(DEL)(1.75)}{EF}\right]^{2/3}(1 - GAMF^2)^{1/2}$$

$$W = WEIGT(TF, TC) = \frac{R\emptyset F \cdot TF}{6} + \frac{R\emptyset C \cdot TC}{12} + ZK$$

$$WT = \frac{W \cdot RC \cdot DEL \cdot \pi}{72}$$

$$SIGMH = \frac{XNY}{2(TFUSED)}$$

$$SIGH = \frac{XNTH}{2\,(TFUSED)}$$

$$SIGM = \frac{XNPHI}{2\,(TFUSED)}$$

8. BASE

$$P = PCR + \frac{(WHS + W)\,G}{144}$$

$$R\emptyset C = 0\ 22 \cdot R\emptyset R \left(\frac{P}{SGR}\right)^{0.588}$$

$$\bar{Z1} = \frac{R\emptyset F}{6}$$

$$Z3 = Z3T \quad P$$

where

$$Z3T = \frac{RT^2\,(3. + GAMF)}{16\ SGF} \ .$$

$$\bar{TE\emptyset PT} = \sqrt{\frac{Z3}{Z1}}$$

$$TCUSED = \frac{Z3}{TFUSED}$$

$$TFUSED = \frac{Z3}{TCUSED}$$

$$W = \frac{R\emptyset C \cdot TCUSED}{12} + ZK + \bar{Z1} \cdot TFUSED$$

$$WT = \frac{W \cdot \pi\, RT^2}{144}$$

9. TENSØN

$$R3 = RC - RSC$$

$$R2 = RN \cdot \sin(THN) + RSN(\cos(BETA) - \cos(THN))$$

$$XL\emptyset GB = \log_e\left[\frac{1 + \cos(BETA)}{\sin(BETA)}\right]$$

$$C1 = \frac{2 \cdot XL\emptyset GB}{1 - \left(\frac{R2}{R3}\right)^2}$$

$$T3 = \frac{PCR \cdot R3}{C1 \cdot SIGCYF}$$

$$YCALC = \sqrt{R3^2 + \frac{(R2^2 - R3^2) \cdot \log_e\left(\frac{1 + C\emptyset STH}{SINTH}\right)}{XL\emptyset GB}}$$

$$T = \frac{R3 \quad T3}{YCALC}$$

$$YDYDT = -\frac{(R2^2 - R3^2)}{SINTH \cdot 2 \cdot XL\emptyset GB}$$

$$A(I) = \frac{YDYDT}{SINTH} \quad I = 1, 2, \ldots 25$$

$$W(I) = T \quad A(I) \quad I = 1, 2, \ldots 25$$

$$WTT = \frac{2\pi \cdot R\emptyset F}{1728} \int_{BETA}^{\pi/2} W$$

$$AT = \frac{2\pi}{144} \int_{BETA}^{\pi/2} A$$

10. GNRLSH

$$T3 = \frac{-(PCR)(\bar{12})}{\left[-\sin(TH3G)(DTHDY3) + \frac{A\cos(TH3G)}{Y3}\right] SIGCYF}$$

$$XNUM = Y(J) - Y(J-\bar{1})$$

$$DEN\emptyset M = X(J) - X(J-\bar{1})$$

$$THETA = \tan^{-\bar{1}}\left(\frac{XNUM}{DEN\emptyset M}\right)$$

$$SINTH = \sin(THETA)$$

$$T = \frac{T3\,(Y3)^{\bar{1}-A}}{Y(J)^{1-A}}$$

where Y3 is the last element of the Y-array.

$$AFUNCT(J) = \frac{Y(J)}{SINTH}$$

$$WFUNCT(J) = T \quad AFUNCT(J)$$

$$WTG = 2\pi \cdot R\emptyset F \int_{Y(\bar{1})}^{Y3} WFUNCT$$

$$AG = 2\pi \int_{Y(\bar{1})}^{Y3} AFUNCT$$

$$WGENST = \bar{WTG}/AG$$

$$R3 = \bar{12} \cdot Y3$$

11. RING

$$RR = \left(\frac{RC^3 \cdot WS1}{1.7 \cdot \pi}\right)^{1/3}$$

where,

$$WS1 = \sqrt{\frac{(2\pi)\,(0\ 3) \cdot T3 \cdot SIGCYF}{ER \cdot RC}}$$

$$TR = \sqrt{\frac{R3 \cdot T3 \cdot SIGCYF}{0.6\pi\,(ER)}}$$

$$WR = \frac{\pi^2 \cdot RR \cdot TR \cdot R\emptyset RG\,(RC - RR)}{432}$$

$$WSCST = \frac{WR \cdot 144}{2\pi \cdot RSC \cdot WS2}$$

where,

$$WS2 = R3 \cdot TH3 + RSC\left(\sin(TH3) - TH3 \cdot \cos(TH3)\right)$$

12. HØTSTR

$$ENC1 = XN(23.3) + X\emptyset\,(24.3) + XC(35.7) + XA(15.26)$$

$$ENC2 = XN(49\ 83) + X\emptyset(52.5) + XC(100.1) + XA(30.5)$$

$$AW = 0.001\left[\frac{2}{3}\ ENC1 - \frac{1}{6}\ ENC2\right]$$

$$BW = -\frac{10^{-6}}{9}\ [ENC1 - 0.5\ ENC2]$$

$$\text{DELTAT} = \left\{ \text{FC} \quad \text{QCI}' \left[1 - \frac{(A\dot{W} \cdot TW1 + BW \quad TW1^2)}{HG\emptyset RI} \right] + FR \cdot QRI \right.$$

$$\left. - \text{EMISS} \left(\frac{TW1}{1200} \right)^4 \right\} \frac{1}{(WSTAR)\,(CP)}$$

$TW1 = TW + 460$

WSTAR is current weight .

$TW = TW + DELTAT \cdot DELTAU$

660<

V. REFERENCES

1. RAD, Mars-Venus Capsule Parameter Study, I, Avco/RAD TR 64-1 JPL Contract 950626 (21 March 1964).

2. Homewood, R. H., A. C. Brine, and A. E., Johnson, Buckling Instability of Monocoque Shells, The Society of Experimental Stress Analysis, Paper No. 457, presented at Washington, D. C. (20 to 22 May 1959).

3. Von Kloppel, K., and O. Jungbluth, Beitrag zum Durchschlag Problem dunnwandiger Kugelschalen, Der Stahlbau 22, pp. 121 through 130 (errata p. 288) Berlin, Springer (1935).

4. Kaplan, A., and Y. C. Fung, A Nonlinear Theory of Bending and Buckling of Thin Elastic Shallow Spherical Shells, NACS-TN-3212 (August 1954).

5. Serpico, J C., Elastic Stability of Orthotropic Conical and Cylindrical Shells Subjected to Axisymmetric Loading Conditions, AIAA Journal 1, No. 1 (1963).

6. Anderson, M. S., J. C. Robinson, H. G. Bush, and R. W. Fralich, A Tension Shell Structure for Application to Entry Vehicles, NASA TN D-2675 (March 1965).

7. Timoshenko, S P., and J. M. Gere, Theory of Elastic Stability, McGraw Hill Book Co., Second Edition (1961), pp. 313 through 318.

8. Gerard, G., and H. Becker, Handbook of Structural Stability, Part III-Buckling of Curved Plates and Shells, NACA TN 3783 (August 1957).

9. Weigarten, V.I., and P. Seide, Elastic Stability of Thin-Walled Cylindrical and Conical Shells Under Combined External Pressure and Axial Compression, AIAA Journal, 3, No. 5, pp. 913 through 920 (May 1965).

10. Weigarten, V. I., E. F. Morgan, and P. Seide, Final Report on Development of Design Criteria for Elastic Stability of Thin Shell Structures, STL/TR-60-0000-19425 (December 1960).

661<

SPECIAL SUBROUTINES

CONTENTS

I. General Purpose Subroutines 1

A. ARTLU 1
B. AR2TLU 2
C. ARSIMP 3
D. ADAMS4 3
E. ADM4RK 4
F. PØLRØT 8
G. CØMDIV 9
H. ATANQR 9
I. ASINR 10
J. ACØSR 10
K. AICRT3 11

663<

I GENERAL PURPOSE SUBROUTINES

A ARTLU

1 Purpose

The purpose of subroutine ARTLU is to perform a linear interpolation within $N \leq 10$ dependent variable tables Y1TBL, Y2TBL, , corresponding to a monotonically increasing independent variable table XTBL.

2. Calling Sequence

N	number of dependent variable tables ($N \leq 10$).
X	independent argument (X must not be larger than the last element of XTBL).
XTBL	table of independent variable (maximum of 1000 elements).
Y1	dependent argument.
Y1TBL	table of dependent variable, with elements corresponding to those in XTBL.
Y2	dependent argument.
Y2TBL	table of dependent variable, with elements corresponding to those in XTBL.

3 Method

Within the DO 11 loop the index I is increased until XTBL(I), the last value of XTBL smaller than the argument X has been found P is then defined as (X-XTBL(I)) /(XTBL(I+1)-XTBL(I)). The computed GØ TØ ensures that N values of the dependent variable will be computed between Statements N and 1 For each i, $1 \leq i \leq N$,

$$Yi = YiTBL(I) + P * (YiTBL(I+1) - YiTBL(I)).$$

If X is smaller than the first element of XTBL, automatic linear extrapolation is performed from the first two elements of the tables. If X is larger than the last element of XTBL an unpredictable error will result, although a value of $I > 1000$ would produce an error message written according to FØRMAT Statement 30.

B. AR2TLU

1. Purpose

The purpose of Subroutine AR2TLU is to perform an interpolation within a two-dimensional table ZTBL the elements of which correspond to the entries in two one-dimensional monotonically increasing tables XTBL and YTBL.

2 Calling Sequence

NX	number of values in XTBL.
NY	number of values in YTBL.
X	independent argument.
XTBL	table of independent variable.
Y	independent argument
YTBL	table of independent variable
Z	dependent argument
ZTBL	table of dependent variable (with dimension (NX, NY))

3 Method

The DØ 5 loop searches XTBL for XTBL(I), the first element greater than or equal to X If there is no such XTBL(I), an error message is written, ICHK is set to 1, and a return to the calling routine is executed

Similarly, the DØ 15 loop searches YTBL for YTBL(J), the first element greater than or equal to Y If there is no such YTBL(J), an error message is written, ICHK is set to 1, and a return to the calling routine is executed

If there is no error return, Z is computed starting at Statement 20 according to the following formula:

$$Z = (1 - P1 - P2 + P3) * ZTBL(I-1, J-1) + (P1 - P3) * ZTBL(I, J-1) + (P2 - P3) * ZTBL(I-1, J) + P3 * ZTBL(I, J)$$

where,

$$P1 = (X - XTBL(I-1))/(XTBL(I) - XTBL(I-1))$$
$$P2 = (Y - YTBL(J-1))/(YTBL(J) - YTBL(J-1))$$
$$P3 = P1 * P2 .$$

Return is then made to the calling routine

C. ARSIMP

1 Purpose

The purpose of Subroutine ARSIMP is to integrate by Simpson's Rule an array YARRAY of N points tabulated at an equally-spaced interval of the independent variable.

2 Method

The calling sequence is

CALL ARSIMP (N, DELTAX, YARRAY, ANSWER)

where,

N	number of points to be integrated (N must be odd)
DELTAX	interval of independent variable at which array points were tabulated
YARRAY	array of points to be integrated
ANSWER	result of integration

The Simpson's Rule algorithm is applied in a DØ loop

D. ADAMS4

1 Purpose

The purpose of Subroutine ADAMS4 is to integrate a set of N first order differential equations by a predictor-corrector method

2 Method

ADAMS4 is a slightly modified version of Subroutine ADM4RK The differences between the two routines are as follows:

a. The calling sequence for ADAMS4 is

CALL ADAMS4 (NZ, ZDEL, VALUE, DERN, UPBND, DNBND, FACTØR, FREQ, HLIMIT, LZ, ZXINDE, DELMIT, DEREQ, PAR, NPAR)

All but the last three arguments are defined identically as those in ADM4RK The arguments DEREQ, PAR, and NPAR were

added to the list They have the following meanings

DEREQ — name of subroutine defining derivatives (The name can now be arbitrary but must appear in an external statement in the calling program)

PAR — array of parameters appearing in the derivative calculations (In ADM4RK, information is generally transmitted to DEREQ through CØMMØN)

NPAR — number of elements in the array PAR

b. Within ADAMS4 the calling sequence for DEREQ is

CALL DEREQ (NZ, VALUE, XINDEP, DERN, LZ, PAR, NPAR)

The three elements added to the list NZ, PAR, and NPAR, have the same meaning here as in the ADAMS4 calling sequence.

c After the 3 CALL DEREQ statements within ADAMS4, the controlling parameter L is tested in an IF statement. If $L \geq 6$, immediate return is made to the calling program This allows L to be reset within DEREQ to indicate an error condition which the main program may act upon

The original writeup of ADM4RK has been included in this section of the manual.

E. ADM4RK[1]

1. Purpose

To allow integration of N differential equations by a predictor-corrector method which will alter the delta of integration so that the required accuracy is maintained.

[1] Sova, C., Avco Programmer's Handbook, No. F2-70, IBM 7094 (11 March 1965)

2. Usage

CALL ADM4RK (N, DEL, VALUE, DERN, UPBND, DNBND, FACTØR, FREQ, HLIMIT, L, XINDEP, DELMIT)

where,

N	The number of equations to be integrated.
DEL	The delta of integration.
VALUE	The array of N integrated values.
DERN	The array of N derivative values.
FREQ	The value which indicates the interval at which the user would like to return to the calling program
HLIMIT	The value which specifies the upper limit of integration When this value is reached, return is made to the calling program.
L:	The control parameter:
= 1	Indicates initial pass. Must be set by user who desires FREQ and HLIMIT testing.
= 2	Indicates that a FREQ interval has been reached.
= 3	Indicates that HLIMIT has been reached.
= 4	Indicates that HLIMIT and FREQ interval has been reached, simultaneously.
= -5	Indicates that return to the calling program is to be made after each successful integration step. This will be set to +5 during the initial pass. No tests are made for FREQ or HLIMIT.
= 6	Indicates that the integration interval is less than DELMIT.

668<

XINDEP — The value of the independent variable.

UPBND — The upper bound on the absolute difference that is allowed between the extrapolated and interpolated values. If this bound is exceeded by this difference, the delta of integration is reduced and integration is retried.

DNBND — The lower bound on the absolute difference between the extrapolated and interpolated values. If this bound exceeds this difference, the delta of integration is increased and integration is carried on.

FACTØR — The percentage by which the delta of integration is increased or decreased in the above. This must be less than 1.

DELMIT — The value below which we do not wish to reduce the delta of integration. If this is not specified (i.e., = 0), it will be set to the initially specified delta of integration divided by 1000.0.

In addition, the user must supply a subroutine having the following specifications:

a. Calling sequence CALL DEREQ (A, B, C, I)

where,

A The array of N integrated values

B The value of the independent variable

C The array of N derivative values

I Corresponds to L in the explanation above.

b. Use

This routine should evaluate the N differential equations given the N integrated values at the value of the independent variable B

c. Restriction

The values of the integrated variables, if used in this routine should be picked up from the argument A and B above only and not from XINDEP and VALUE which were previously defined. Also nothing should be stored into A and B.

669<

3. Sample of Use

Given: $\frac{d^2 y}{dx^2} = x$ where $y_o = 0$, $\frac{dy_o}{dx} = 0$

evaluate y from 0 to x = 100 and print the values of y at x = 0, 2, 4, 6, ... 100. Starting with an initial Δx of 0.005 and increase or decrease the Δx by 30 percent if the difference between the extrapolated and interpolated values do not fall between certain given bounds.

```
DEREQ (D, X, LT, L)

DIMENSION D(7), DT (8).

DT (1) = D (2)

DT (2) = x

RETURN

END

DIMENSION D (2), DT (2), UPBND (2), DNBND (2)

L = 1 or L = -5

DELTAX = 0.005

X = 0.0

D (1) = 0.0

D (2) = 0.0

UPBND (1) = 1.0E - 5

DNBND (1) = 1.0E - 6

UPBND (2) = 0.5E - 5

DNBND (2) = 0.5E - 6
```

```
1  CONTINUE

   CALL ADM4RK (2, DELTAX= D= DT= UPBND= 0.3, 2.0, 100.0,
   L, X, 1.0E-7)

   WRITE ØUTPUT TAPE 5, 2, X, D (1)

2  FØRMAT (1P2E20.5)

   GØ TØ (1, 1, 3, 3, 4, 5), L

3  STØP 77777

4  IF (X - 100.0) 1, 3, 3

5  CALL MESSAG (24H DEL X IS TØØ SMALL, 3)

   STØP 77776
   END
```

F. PØLRØT

1. Purpose

The purpose of Subroutine PØLRØT is to calculate the roots of a polynomial

2. Method

The calling sequence is

```
CALL PØLRØT (N, A, R, C)
```

N	degree of polynomial. Maximum of 20
A	coefficients of polynomial (Note that A(1) is the coefficient of X^n)
R	roots of polynomial R is dimensioned (2, N) where R(1, J) is the real, R(2, J) is the imaginary part of the Jth root
C	convergence factor. (C = 10^{-5} is satisfactory in most cases)

Newton-Raphson iteration is used Therefore, if f(x) is the polynomial and if f' (r) $\longrightarrow$ 0, the method will not converge. Moreover, the constant term of the polynomial cannot be 0.

(PØLRØT calls PØLRT1)

671

G. CØMDIV

1. Purpose

The purpose of Subroutine CØMDIV is to evaluate E + ıF = (A +iB)/(C + ıD) when A, B, C, D are given

2. Method

The calling sequence is

CALL CØMDIV (A, B, C, D, E, F)

The routine calculates

G = C * C + D * D
E = (A * C + B * D)/G
F = (B * C - A * D)/G

H. ATANQR

1 Purpose

The purpose of function ATANQR(W, H) is to calculate the arc-tangent of W/H where W and H are floating point numbers, and to return the result either in radians or degrees The convention to be observed is that

$$0 \leq \text{ATANQR}(W, H) < \begin{cases} 2\pi \\ 360 \text{ degrees} \end{cases}$$

2. Method

ATANQR is a multiple entry function with entry points ATANQ and ATANQD

If ATANQR (W, H) or ATANQ (W, H) is referenced, D is set to 1 , and X is defined as ATAN2(W, H), where ATAN2 is the FØRTRAN IV library function IF X < 0, it is reset to X + 2 π Then ATANQR is defined as X/D.

If ATANQD(W, H) is referenced, D is set to 0 017453293, and the remaining computations are carried out as before.

I ASINR

1 Purpose

The purpose of function ASINR(W) is to calculate the arc-sine of a floating point number W and to return the result either in radians or degrees. The convention to be observed is

$$0 \leq \text{ASINR}(W) \leq \begin{cases} \pi/2 \\ 90 \text{ degrees} \end{cases}$$

or,

$$\left.\begin{matrix} 3\pi/2 \\ 270 \text{ degrees} \end{matrix}\right\} \leq \text{ASINR}(W) \leq \begin{cases} 2\pi \\ 360 \text{ degrees} \end{cases} .$$

2. Method

ASINR is a multiple entry function with entry points ASIN and ASIND.

If ASINR(W) or ASIN(W) is referenced, D is set to 1., WS is defined as 1 - W * W, and ASINR is computed as

ASINR = ATANQR (W, SQRT(WS))/D

If ASIND(W) is referenced, D is set to 0 017453293, and the remaining computations are carried out as before

J. ACØSR

1. Purpose

The purpose of function ACØSR(W) is to calculate the arc-cosine of a floating point number W and to return the result either in radians or degrees The convention to be observed is

$$0 \leq \text{ACØSR}(W) \leq \begin{cases} \pi \\ 180 \text{ degrees} \end{cases} .$$

2 Method

ACØSR is a multiple entry function with entry points ACØS and ACØSD

If ACØSR(W) or ACØS(W) is referenced, D is set to 1 , WS is defined as 1 - W * W, and ACØSR is computed as

ACØSR = ATANQR (SQRT(WS), W)/D

If ACØSD(W) is referenced, D is set to 0 017453293, and the remaining computations are carried out as before

K. AICRT3[1]

1. Purpose

AICRT3 is a general-purpose subroutine for the displaying of output data in graphical form

2. Method

From the user's viewpoint, the version of AICRT3 to be used with FØRTRAN IV programs operates in the same manner as the FORTRAN II version Therefore, although no new writeup was issued for FORTRAN IV, the following original writeup still described the subroutine usage, if the reader makes allowances for the standard differences between the two systems 9(e.g., FORTRAN IV arrays being stored forward in core):

a. Log x Log

b. Log x Linear

c. Linear x Log

d. Linear x Linear.

Along with these types of graphs, AICRT3 has the ability of plotting multi-function graphs. If this feature of the code is used, one must obtain separately the upper and lower limits of the functions. One must then supply the upper and lower limits to the subroutine by use of the override feature, or first plot the curve which has both the maximum value of all functions being plotted and also the minimum value of all functions. If the override feature is used, the arguments supplied are unaltered. If the override feature is not used, the upper and lower limits are determined by the code and returned to the user via the arguments. Therefore, the programmer must not place a variable or constant for said arguments that are to be used again at their original values, since they will be changed by this subroutine. The override feature also will give the user the ability for a standard size grid for multiple case plotting.

---

1 Hoffman, M , General Code for Display of Digital Data, Applied Mathematics, Atomic International, Naa, Inc., Canoga Park, California(8January 1963), published and distributed under bylaws of UAIDE

3. Use

The method one uses to obtain the above named plot is as follows:

a. On the EDPM Job Request, deck set up instructions; request subject deck first before data

b. In your program deck for each plot, use the following calling sequence:

CALL AICRT 3 (KX, KY, X, Y, NP, ND, NV, NS, NC, T, A, Ø, NF, NG, DCX, DCY, NXØ, XL, XU, NYØ, YL, YU) *

c. This routine should not be used to plot a point at a time.

4 Input Data Description

The inputs for this program are the arguments of the calling sequence in Section 5. They are as follows·

KX	0 for linear display in X 1 for log display in X
KY	0 for linear display in Y 1 for log display in Y
X	First location of storage for values of X
Y	First location of storage for values of Y
NP	Number of points in X and Y array to be plotted
ND	Interval at which points will be displayed, e.g., every point = 1, every 10th point = 10
NV	2 if one wishes to join points plotted with a straight line 1 if not

* The arguments for this calling sequence will be explained in the next section

NS	2 if the data is to be sorted as a function of X 1 if the data is not to be sorted (This is to enable the connecting of points by vectors.)
NC	Character representation of point to be plotted
T**	A nine word title to be displayed at the top of the graph
A**	A nine word abscissa title
Ø**	A nine word ordinate title
NF	1 if new frame is required 2 if overlay is required
NG	1 non-log labeling determined by code If any X meets the following condition, $\|X\| \geq 10^6$ or if all X are in the range $-10^5 < X < 10^5$ the labeling would automatically be E-label notation. -2 non-log labeling always E-label notation
DCX, DCY	Governs the coarseness of the X and Y linear meshes. (See Section V - Special Features.)
NXØ	2 override search for X-upper and X-lower. 1 let routine determine X-upper and X-lower (See section E - Special Features.)
XL	X-lower, if needed (NXØ = 2)
XU	X-upper, if needed (NXØ = 2)
NYØ	2 override search for Y-upper and Y-lower 1 let routine determine Y-upper and Y-lower
YL	Y-lower, if needed (NYØ = 2)
YU	Y-upper, if needed (NYØ = 2).

**Must be stored in FORTRAN order (backwards in core) or read into core using the A conversion

5. Special Features

It should be noted that 16.0 is the recommended value for DCX and DCY. If it is necessary to have more grid lines, all one has to do is decrease the value of DCX and DCY. If one wants fewer lines, increase the value of DCX and DCY. Another note of special interest is that the entire array of X and Y that are being plotted must be in core at the time of execution of this routine.

The feature of sorting the functions before plotting has one drawback; viz., after the functions have been sorted, the original order is totally destroyed. This feature should not be used unless the plotting of the data is the last function of the code or order of the data is of no importance.

If (XU/ XL -1) < 0.0001, or if XU = XL = 0, no graph will be drawn as the function is or is almost constant (similarily for YU and YL).

The titles used should be centered in the 48-character array to ensure centering of the titles on the graph. The abscissa and ordinate title can be as large as 54 characters.

If one uses the upper and lower limit search provided by AICRT3, care should be exercised in the definition of the variable or constant used for XL, XU, YL, or YU as they will be changed by the subroutine.

NG is used to permit a floating point notation labeling of linear plots. This is provided because the maximum fixed point number that can be used is 999999, and the smallest greater than zero 0.000001, similarly for negative values. To provide meaningful labeling of data outside this range, the floating point notation has been made available.

A very important factor is assigning X and Y arguments is to make sure you only have a singly subscripted array for each.

The limit of the number of cycles in log plotting is 10. Do not try to plot more than a 10 x 10 log x log plot.