View metadata, citation and similar papers at core.ac.uk
brought to you by CORE
provided by NASA Technical Reports Server

NASA TECHNICAL MEMORANDUM

NASA TM X-2350

C.1

TECH LIBRARY KAFB, NM
0151864

LOAN COPY: RETURN TO
AFWL (DO UL)
KIRTLAND AFB, N. M.

NASA TM X-2350

TURBINE AND COMPRESSOR PERFORMANCE OF A BRAYTON ROTATING UNIT DURING HOT CLOSED-LOOP OPERATION

by Robert Y. Wong, Hugh A. Klassen, and Robert C. Evans

Lewis Research Center
Cleveland, Ohio 44135

NATIONAL AERONAUTICS AND SPACE ADMINISTRATION • WASHINGTON, D. C. • SEPTEMBER 1971

TECH LIBRARY KAFB, NM

0151864

1. Report No.	2. Government Accession No.	3. Recipient's Catalog No.
NASA TM X-2350		

4. Title and Subtitle	5. Report Date
TURBINE AND COMPRESSOR PERFORMANCE OF A BRAYTON ROTATING UNIT DURING HOT CLOSED-LOOP OPERATION	September 1971
	6. Performing Organization Code
7. Author(s)	8. Performing Organization Report No.
Robert Y. Wong, Hugh A. Klassen, and Robert C. Evans	E-6343
9. Performing Organization Name and Address	10. Work Unit No.
Lewis Research Center National Aeronautics and Space Administration Cleveland, Ohio 44135	120-27
	11. Contract or Grant No.
12. Sponsoring Agency Name and Address	13. Type of Report and Period Covered
National Aeronautics and Space Administration Washington, D.C. 20546	Technical Memorandum
	14. Sponsoring Agency Code

15. Supplementary Notes

16. Abstract

Efficiency estimates of the turbine and compressor components of a Brayton rotating unit (BRU) were made for operation at design temperature, approximately design equivalent speeds, and a range of operating pressure levels. These estimates were made from performance maps obtained from individual component research packages of the BRU turbomachinery. These maps were obtained at nominal design Reynolds number and rotor axial clearances that were smaller than that used in the BRU turbomachinery. Corrections, based on experimental data obtained from the packages for axial clearance, Reynolds number, and seal leakage flow were applied to these maps. Estimated efficiencies were checked by making a power balance on the BRU rotor.

17. Key Words (Suggested by Author(s))	18. Distribution Statement
Brayton rotating unit Turbine and compressor performance Power generation Power balance	Unclassified - unlimited

19. Security Classif. (of this report)	20. Security Classif. (of this page)	21. No. of Pages	22. Price*
Unclassified	Unclassified	28	$3.00

*For sale by the National Technical Information Service, Springfield, Virginia 22151

TURBINE AND COMPRESSOR PERFORMANCE OF A BRAYTON ROTATING UNIT DURING HOT CLOSED-LOOP OPERATION

by Robert Y. Wong, Hugh A. Klassen, and Robert C. Evans

Lewis Research Center

SUMMARY

The Brayton rotating unit (BRU) was operated as part of a closed loop to simulate operation in a Brayton space power system. An estimate of turbine and compressor efficiency was made for operation at approximately design equivalent speed, design inlet temperature, and a range of operating pressure levels. These estimates were obtained from performance maps obtained from individual component research packages of the BRU turbomachinery. These maps were obtained at nominal design Reynolds number and rotor axial clearances that were smaller than that used in the BRU turbomachinery. Corrections, based on experimental data obtained from these packages for axial clearance, Reynolds number, and seal leakage flow, were applied to these maps. Estimated efficiencies were checked by making a power balance on the BRU rotor. At design Reynolds number, estimated total efficiencies were 0.860 for the turbine and 0.745 for the compressor. The efficiencies obtained from the turbine and compressor research packages at design equivalent conditions were 0.894 for the turbine and 0.800 for the compressor. The lower efficiency values obtained for the BRU are attributed to greater axial clearances used in the BRU, seal leakage flows, and off-design operation caused by facility piping pressure losses that were lower than design values for the space power system.

INTRODUCTION

As part of the NASA Lewis Research Center Brayton cycle space electric power generation program, a single-shaft turbine-compressor-alternator package (designated the Brayton Rotating Unit or BRU) was designed and manufactured under contract for the space power system project summarized in reference 1. The BRU, which is the rotating component of a Brayton power system was designed to operate on self-acting gas bearings

and on a mixture of helium and xenon with a molecular weight of 83.8. Design and descriptive information on the BRU is given in reference 2.

One of the primary goals in the design of the BRU was the attainment of high efficiency in the turbomachinery components. In order to determine if this goal was successfully achieved, component research packages of the turbine, compressor, and alternator were manufactured and delivered. Reference 3, which presents the results of the experimental investigation of the turbine research package (TRP) shows that the total-to-total efficiency design goal of 88.4 percent was exceeded by about one efficiency point at design point operation with design clearances. The compressor research package (CRP) investigation (ref. 4) showed that, at design flow and speed, the design goal in efficiency of 80 percent was achieved with design clearances. The peak efficiency for the compressor was 82 percent.

Turbomachinery performance as components of the BRU was determined over a range of operating pressure and temperature, while the BRU was operating hot as part of a closed loop to simulate operation in a Brayton electric power generating system. The closed loop is described in reference 5. Instrumentation was provided to measure the turbomachinery performance at the inlet and outlet flanges. The speed of the BRU was maintained between 36 000 and 37 000 rpm (approximately design equivalent speed with design inlet temperature) by an electronic speed controller (described in ref. 6). A summary of other BRU testing is given in reference 1.

Since BRU rotative speed was almost constant, turbomachinery inlet temperatures, and loop pressure level were the operating variables. In a given closed loop, the turbine and compressor operating point is largely determined by inlet temperatures. Reynolds number had only a secondary effect.

This report presents BRU turbine and compressor component performance in terms of weight flow, speed, and pressure ratio. Efficiency measurements were subject to errors caused by external heat losses and heat transfer within the BRU. BRU turbomachinery efficiency was estimated from performance maps obtained from individual research packages of the turbomachinery components. These maps were obtained with argon gas at nominal design Reynolds number but with rotor axial clearances smaller than those used in the BRU. Corrections based on experimental data obtained from these packages, for axial clearance, Reynolds number, and seal leakage flow were applied to these maps. The efficiencies thus obtained were checked by performing a power balance on the BRU rotor.

BRU AND TEST FACILITY DESCRIPTION

A schematic drawing of the experimental test facility is shown in figure 1. The BRU is shown installed between the heater and the gas cooler. The system as shown consti-

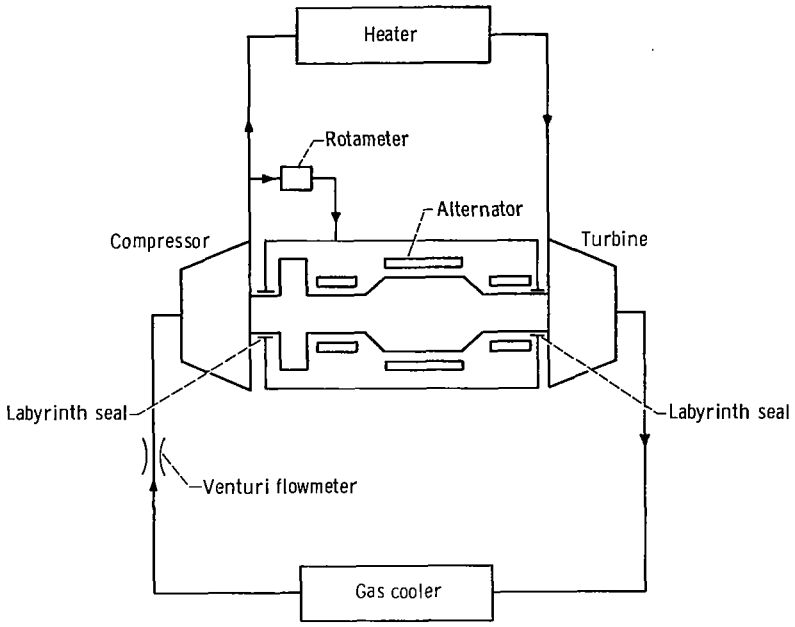

Figure 1. - Experimental test setup.

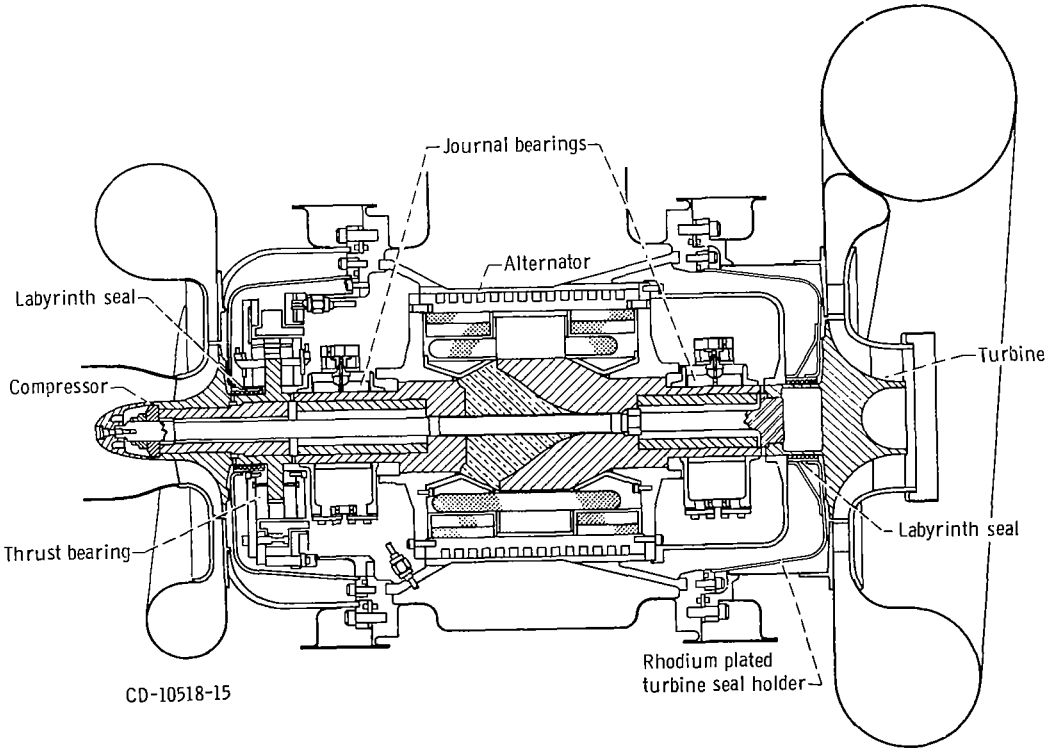

Figure 2. - Schematic of CRU.

tutes a closed loop electric power generating system with no recuperation. The design working fluid is a mixture of helium and xenon with a molecular weight of 83.8.

A schematic drawing of the BRU showing the salient features is presented in figure 2. There are two journal bearings and a double acting thrust bearing, which are all self-lubricated with system working fluid. The compressor and turbine rotors are mounted on the ends of a common shaft with the alternator rotor between them. Adequate gas bearing ambient pressure is maintained by bleeding 1.2 percent of compressor flow into the bearing and alternator cavity. This flow returns to the system as leakage flow through the labyrinth seals. Design and descriptive information on the BRU and the test facility may be found in references 2, 5, and 6.

For the 6-kilowatt power output level, the design point conditions for the turbine and the compressor operating in a mixture of helium and xenon with a molecular weight of 83.8 and rotative speed of 36 000 rpm are as follows.

	Turbine	Compressor
Inlet total temperature, $^{\circ}K$	1144	300
Inlet total pressure, N/cm^2	17.24	9.31
Total pressure ratio (flange to flange)	1.749	1.9
Outlet total pressure; N/cm^2	9.85	17.69
Weight flow, kg/sec	0.339	0.343

Aerodynamic design information on the turbine may be found in references 2, 3, and 7 and on the compressor in references 2, 4, and 8.

INSTRUMENTATION

Instrumentation was provided to measure total and static pressures, and total temperatures at the inlet and outlet flanges of the turbine and compressor, compressor weight flow, and the total seal leakage flow required to maintain sufficient ambient pressure for gas bearing operation and alternator heat transfer.

The instrumentation stations for the turbine and compressor are shown in figure 3. The centerline for each station was located approximately 5 to 10 centimeters beyond the inlet and outlet flanges. The instrumentation at each station consisted of two static pressure taps and one combination total pressure and total temperature rake. The rake consisted of two total pressure probes and three thermocouple probes. Strain gage transducers were used to measure pressures. Bare-spike chromel-alumel ther-

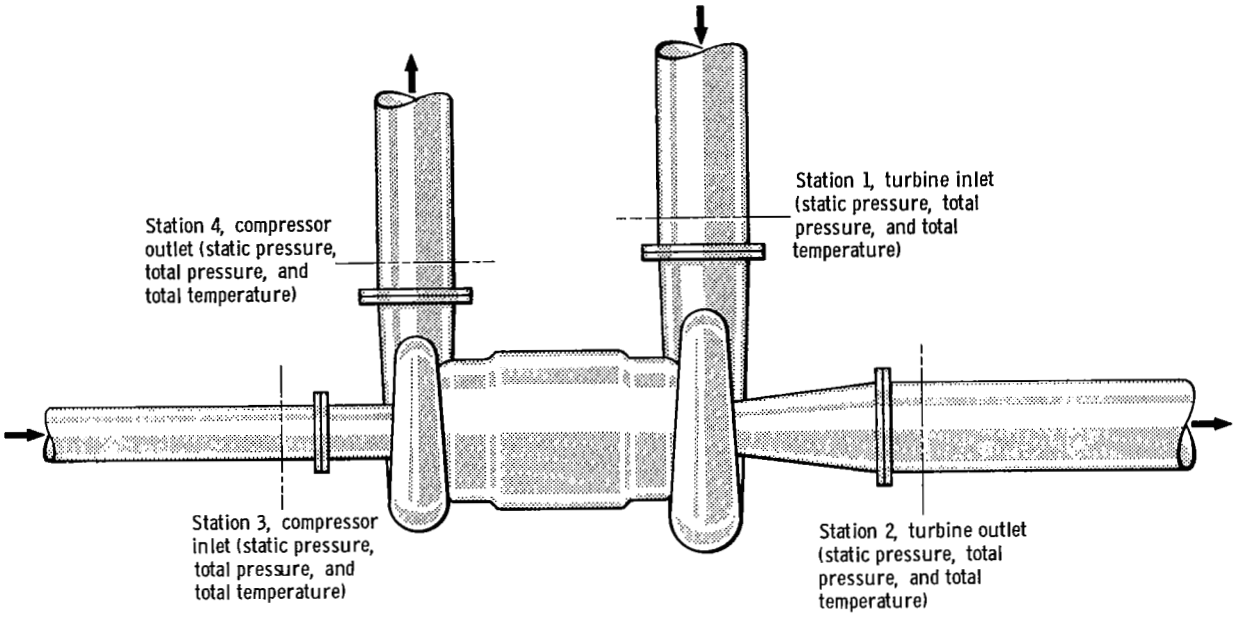

CD-11029-15

Figure 3. - Turbine and compressor instrumentation stations.

mocouples made from 0.031-centimeter-diameter wire were used to measure temperatures.

The compressor weight flow was measured with a calibrated Venturi flowmeter located upstream from the compressor inlet. Total seal leakage flow was measured with a calibrated rotameter (fig. 1). Measurements made of system flow rate, turbine and compressor total pressure ratio, rotative speed, and compressor inlet temperature are considered to be the most reliable. All pipes were insulated. The insulation reduces temperature measurement errors due to conduction and radiation effects by minimizing the temperature difference between the gas and the pipe.

In order to obtain accurate turbine inlet temperature measurements, trace heaters were installed on the turbine inlet pipe to further minimize this temperature difference.

The compressor discharge measurements are considered reliable because of the low temperature level (415 K). Since trace heaters were not used on the turbine discharge line and the temperature level is high (911 K), this measurement is considered the least reliable.

All data were recorded by a high-speed automatic data recorder and processed through a digital computer.

PROCEDURE

The electronic speed controller maintained the rotative speed between 36 000 and 37 000 rpm. Turbine inlet temperature and facility pressure level were varied over a wide range. A description of the test program is given in reference 9. The working fluid for the data presented in this report was the design mixture of helium and xenon with a molecular weight of 83.8. The TRP and CRP were operated on argon. The weight flow data in this report have been corrected to the values corresponding to the design helium-xenon mixture with a molecular weight of 83.8. The correction was made as follows:

$$\left(\frac{W\sqrt{T}}{P}\right)_{he-xe} = \left(\frac{W\sqrt{T}}{P}\right)_{argon}\sqrt{\frac{M_{he-xe}}{M_{argon}}} = \left(\frac{W\sqrt{T}}{P}\right)_{argon}\sqrt{\frac{83.80}{39.95}}$$

(Symbols are defined in appendix A.)

In order to ensure adequate axial clearance during hot operation, the turbine and compressor were operated with axial tip clearances that were greater than those used in the research packages. The estimated BRU turbine tip axial clearance during hot operation was 54.9×10^{-3} centimeter or about 6 percent of inlet blade height. The clearance used in the TRP was 2.6 percent of inlet blade height. The estimated BRU compressor tip clearance during hot operation was 39.1×10^{-3} centimeter or about 7.5 percent of exit blade height. The clearance used in the CRP was 3.9 percent of exit blade height. The basis for these estimates is given in appendix B.

The bearings were operated hydrodynamically except during startup and shutdown. During hydrodynamic operation, it was necessary to pressurize the bearing cavity to provide adequate ambient pressure for gas bearing operation. This was done by bleeding 1.2 percent of the compressor discharge flow into the bearing cavity. The bleed flow was restricted by the clearance of the two labyrinth seals that separate the bearing cavities from the compressor and turbine (fig. 2).

As discussed in the section INSTRUMENTATION, the outlet temperature measurement at the turbine is considered to be unreliable. Thus the turbine efficiency measurements are unreliable. An estimate of the efficiency of the turbine and compressor components of the BRU may be obtained from performance maps obtained from the individual component research packages. This assumes that the research packages are geometrically similar to the BRU turbomachinery. Thus, at a given equivalent speed and pressure ratio, differences in weight flow between the BRU turbomachinery and the respective research package may be traced back to the effects of area variations due to manufacturing tolerances, of differences in operating temperature level, of differences in axial

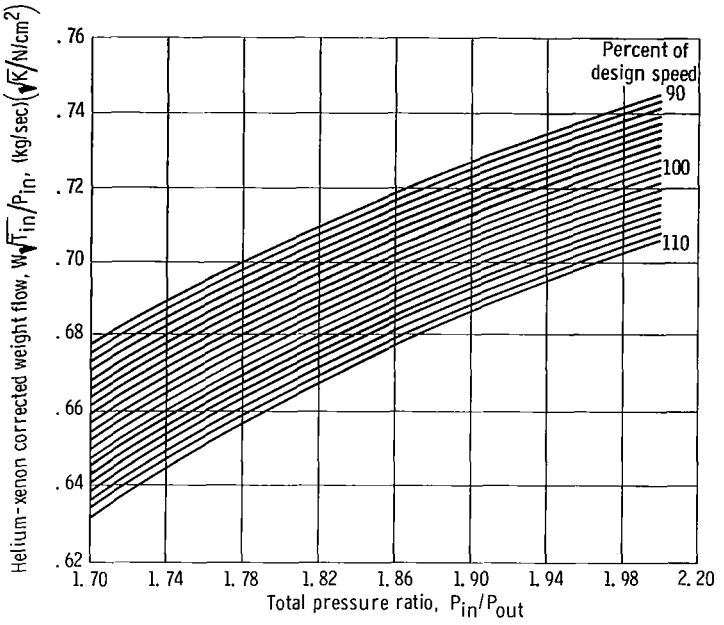

Figure 4. - Variation of turbine research package flow with total pressure ratio. Normal Reynolds number, 79 000.

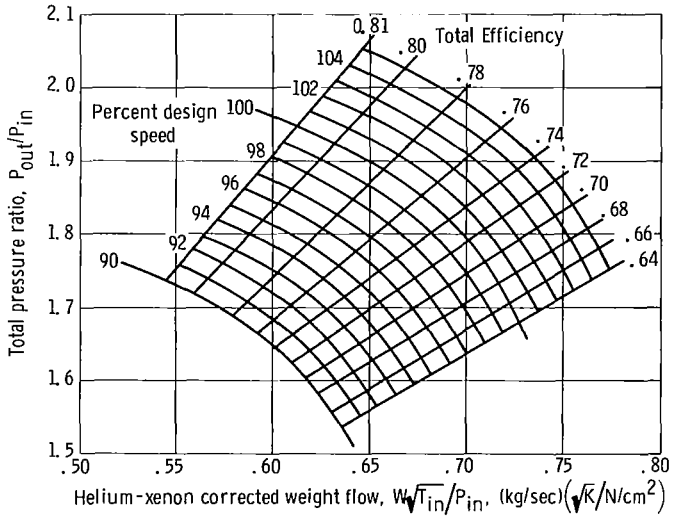

Figure 5. - Variation of compressor research package flow with total pressure ratio. Nominal Reynolds number, 251 000.

clearances used in buildup, of seal leakage flow, and of Reynolds number effects. The losses in efficiency due to these effects were experimentally determined with the research packages and summed up to obtain an estimate of efficiency of the BRU turbomachinery. The efficiencies thus obtained were checked by performing a power balance on the BRU rotor.

The research package performance maps used are presented in figures 4 and 5. These maps are based on unpublished data of the authors of reference 3 and on reference 4, respectively. Figure 4 presents turbine research package corrected weight flow data as a function of flange total pressure ratio for 90, 100, and 110 percent of design equivalent speed. These data were obtained with design axial clearance and were interpolated to obtain curves at speed increments of 1 percent of design speed. For the range of pressure ratios and speeds shown, total efficiency is between 0.89 and 0.90. Figure 5 presents compressor research package corrected weight flow data as a function of flange to flange total pressure ratio for 90 and 100 percent of design speed. These data were obtained with design axial clearance and were interpolated to obtain curves in increments of 1 percent of design speed from 90 to 100 percent of design equivalent speed. The curves shown from 101 to 105 percent were obtained by extrapolation. The interpolation and extrapolation were performed by assuming that the efficiency curves are straight lines and that the weight flow varies linearly with speed along lines of constant efficiency.

RESULTS AND DISCUSSION

Turbomachinery performance was experimentally obtained while the BRU was operated in a closed loop with a speed controller to simulate operation in a Brayton power generating system. The temperature and pressure level of the loop was varied in order to vary Reynolds number, pressure ratio, weight flow, and equivalent speed of the turbomachinery. An accurate measure of turbomachinery efficiency could not be made because of internal heat transfer and external heat losses. An estimate of turbine and compressor efficiency was obtained from performance maps obtained from component research packages of the turbomachinery. These maps were obtained at nominal design Reynolds number but at rotor axial clearances that were smaller than those used in the BRU turbomachinery. Corrections based on experimental data obtained from these packages for axial clearance, Reynolds number, and seal leakage flow were applied to the efficiencies obtained from these maps. The efficiency obtained was checked by performing a power balance on the BRU rotor as described in appendix B.

Turbine Performance

BRU turbine corrected weight flow at various Reynolds numbers with corresponding conditions of speed (in percent of design equivalent) and total pressure ratio are tabulated in table I. The data shown represent the ranges of turbine weight flow, speed, and total pressure ratio that were covered in BRU Testing. Shown also in table I are the corrected weight flows for the turbine research package (TRP) at the same conditions of speed and pressure ratio (fig. 4). The next column shows the ratio of corrected weight flows for the BRU and TRP. The TRP data shown are for nominal design Reynolds number operation but at an axial clearance of 2.6 percent of rotor inlet blade height. The significance of axial clearance will be discussed subsequently. The table shows that a range of corrected speed from 100.9 to 119.8 percent of design corrected speed, a range in total pressure ratio from 1.74 to 1.91, and a range in Reynolds number from 46 700 to 179 000 was covered during BRU testing. Comparison of BRU turbine data in the range of Reynolds number from 70 000 to 80 000 (the design value is 77 300) indicates that the BRU turbine weight flow is about 0.7 percent higher than the TRP weight flow.

A study of the factors that could lead to a difference in weight flow between the BRU turbine and the TRP indicates that the difference in turbine inlet temperature of 778 K, the difference in operating axial clearance (between the turbine rotor and its shroud), seal leakage flows entering the main turbine flow between the rotor and stator, and manufacturing tolerances are major factors.

The BRU turbine nozzle throat area at room temperature was 0.2 percent larger than the TRP throat area. Consequently, the BRU turbine should have a higher equivalent weight flow than the TRP (ref. 10). Thermal expansion of throat areas caused by hot operation of the BRU should cause the BRU turbine weight flow to be still higher. The difference in metal temperature between the BRU and TRP is estimated to be 750 K. The combined effects of stator throat area variations between the BRU turbine and the TRP should cause the BRU turbine equivalent weight flows to exceed TRP flows by 2.8 percent (appendix B).

Increasing the TRP turbine rotor inlet axial clearance (between the rotor and shroud) decreases equivalent weight flow (ref. 11). The operating axial clearance of the BRU turbine was estimated to be 6 percent of rotor inlet blade height. The TRP data in table I were obtained with 2.6 percent axial clearance and nominal design Reynolds number. According to reference 11, increasing axial clearance from 2.6 to 6 percent, decreases equivalent weight flow by approximately 0.6 percent.

The effect of seal leakage flow entering turbine flow between the nozzle and rotor is difficult to evaluate. Cursory tests with the turbine research package of this effect indicate very minor effects on efficiency and weight flow. Test on axial flow turbines

TABLE I. - BRU TURBINE AND TURBINE RESEARCH PACKAGE DATA

Reynolds number	Turbine total pressure ratio	Percent turbine design speed	BRU turbine corrected weight flow, $W\sqrt{T}/P$	TRP corrected weight flow at design Reynolds number, $W\sqrt{T}/P$	Corrected weight flow ratio	TRP total efficiency at 12 percent axial clearance	Efficiency correction due to Reynolds number change
46 700	1.813	101.3	0.6826	0.6836	0.999	0.861	-0.011
59 800	1.829	101.3	.6885	.6875	1.002	.860	-.005
72 400	1.840	101.5	.6929	.6900	1.004		0
79 100	1.843	106.8	.6944	.6900	1.006		.002
85 300	1.852	101.9	.6964	.6920	1.006		.003
97 900	1.855	102.1	.6973	.6920	1.008		.007
110 000	1.854	101.9	.6993	.6924	1.010	.860	.009
123 000	1.856	102.2	.7003	.6920	1.012	.860	.011
133 000	1.859	102.5	.7027	.6920	1.016	.860	.012
146 000	1.909	102.9	.7150	.7023	1.018	.859	.013
78 500	1.831	101.4	.6929	.6875	1.008	-----	------
85 300	1.803	106.0	.6748	.6709	1.006	-----	------
94 600	1.782	111.9	.6529	(a)	(a)	-----	------
106 000	1.762	118.9	.6223	(a)	(a)	-----	------
132 000	1.843	102.5	.7018	.6885	1.019	-----	------
146 000	1.815	107.6	6812	.6704	1.016	-----	------
161 000	1.783	112.9	.6547	(a)	(a)	-----	------
179 000	1.765	119.8	.6223	(a)	(a)	-----	------
75 200	1.741	100.9	.6694	.6650	1.007	-----	------
75 800	1.768	100.9	.6777	.6723	1.008	-----	------
77 000	1.804	101.2	.6871	.6812	1.008	-----	------
78 700	1.853	101.6	.6973	.6924	1.007	-----	------
80 000	1.901	101.7	.7072	.7027	1.006	-----	------

[a]Not applicable.

with a choked flow nozzle and velocity compounded rotors indicates effects as large as 1 point in efficiency for each percent in bleed flow. Seal leakage flow tests with the compressor research package indicate a 1/2-point loss in efficiency and a 1-percent decrease in compressor weight flow for a 1 percent seal leakage flow.

Summing up these difference results in the prediction that the BRU turbine should operate with a weight flow that is 2.2 percent higher than the TRP at design Reynolds number. The data in table I show that the BRU turbine weight flow is only 0.7 percent higher than the TRP. Thus there is a 1.5 percent difference that seemingly cannot be accounted for. Part of this difference must be caused by the turbine seal leakage flows. The remainder could be caused by the axial clearance being larger than the 6 percent estimated earlier. If the weight flow discrepancy is attributed entirely to axial clearance effects, a 12-percent clearance would be required to reconcile BRU and TRP weight flows. Turbine efficiencies corresponding to 12 percent axial clearance and design Reynolds number are tabulated in table I for use in the power balance that will be subsequently performed on the BRU rotor.

The variation of BRU turbine corrected weight flow with Reynolds number can be seen in the change in weight flow ratio in table I. At a Reynolds number of 46 700 the weight flow ratio is 0.999 and increases to 1.018 at the Reynolds number of 146 000. Thus, there is a 1.9-percent change in weight flow for a change of Reynolds number of about 100 000. This rate of change in weight flow with Reynolds number is about twice that which was observed for the TRP (ref. 3). This difference, however, is well within the experimental accuracy of the two tests. The change in efficiency with changes in Reynolds number as found for the TRP in reference 3 are tabulated in table I with design Reynolds number as the reference point. These data represent the corrections that must be made to the TRP efficiencies to allow for the effect of Reynolds number. These data show that a negative correction in efficiency of 1.1 points at the lowest BRU turbine Reynolds number and a positive 1.3-point correction in efficiency at the highest Reynolds number are required.

The computed efficiencies for the BRU turbine are shown in table III. These values are approximately 5 efficiency points lower than measured efficiencies. Some of this discrepancy is due to internal heat loss, but most of the difference is apparently due to external heat loss through the insulation and errors in the outlet temperature measurements due to radiation and conduction effects. These errors could not be computed with a reasonable degree of accuracy.

Compressor Performance

BRU Compressor corrected weight flow at various Reynolds numbers with corresponding speed (in percent of design equivalent speed) and total pressure ratio are tab-

TABLE II. - BRU COMPRESSOR AND COMPRESSOR RESEARCH PACKAGE DATA

Reynolds number	Compressor total pressure ratio	Percent compressor design speed	BRU compressor corrected weight flow, $W\sqrt{T}/P$	Compressor research package corrected weight flow at design Reynolds number, $W\sqrt{T}/P$	Corrected weight flow ratio	CRP total efficiency at 7.5 percent axial clearance	Efficiency correction due to Reynolds number change
165 000	1.865	101.1	0.6449	0.6890	0.936	0.740	-0.012
212 000	1.879	101.4	.6552	.6890	.951	.745	-.007
257 000	1.888	101.8	.6615	.6895	.959	.747	-.003
280 000	1.896	102.1	.6660	.6900	.065	.746	0
302 000	1.899	102.2	.6694	.6905	.969	.748	.001
343 000	1.904	102.3	.6709	.6910	.971	.747	.005
393 000	1.909	102.5	.6748	.6920	.975	.750	.007
435 000	1.908	102.6	.6768	.6929	.977	.749	.009
471 000	1.910	102.9	.6807	.6969	.977	.757	.011
532 000	1.969	105.2	.6998	.7145	.980	.753	.014
296 000	1.962	104.8	.6826	.7037	.970	-----	------
289 000	1.934	103.6	.6763	.6978	.969	-----	------
283 000	1.907	102.7	.6684	.6949	.961	-----	------
270 000	1.864	100.6	.6547	.6812	.961	-----	------
258 000	1.824	98.7	.6414	.6650	.965	-----	------
251 000	1.789	97.3	.6311	.6586	.958	-----	------
483 000	1.941	104.2	.6910	.7052	.980	-----	------
467 000	1.905	102.7	.6792	.6949	.977	-----	------
455 000	1.871	101.2	.6674	.6890	.969	-----	------
442 000	1.844	100.0	.6586	.6792	.970	-----	------
434 000	1.823	99.1	.6513	.6738	.966	-----	------
424 000	1.801	98.0	.6449	.6665	.968	-----	------
278 000	1.835	101.7	.6611	.6866	.963	-----	------
283 000	1.853	101.2	.6660	.6959	.957	-----	------
289 000	1.826	100.8	.6728	.6993	.962	-----	------
295 000	1.798	100.4	.6748	.7027	.960	-----	------

TABLE III. - POWER BALANCE ON BRU ROTOR

Estimated BRU turbine total efficiency, η_t	BRU turbine ideal power, kW	BRU compressor measured efficiency corrected for internal heat transfer	Estimated BRU compressor total efficiency, η_c	BRU compressor ideal power, kW	BRU alternator output power, kW	Alternator efficiency	BRU compressor input power, kW	BRU alternator input power, kW
0.850	12.239	0.736	0.728	4.314	3.549	0.902	5.926	3.935
.855	16.023	.745	.738	5.620	4.999	.916	7.615	5.457
.860	19.649	.749	.744	6.872	6.430	.927	9.737	6.936
.862	21.610	.750	.746	7.594	7.142	.929	10.180	7.688
.863	23.460	.751	.749	8.209	7.767	.931	10.960	8.343
.867	26.995	.755	.752	9.490	9.027	.932	12.620	9.680
.869	30.717	.749	.757	10.773	10.550	.932	14.231	11.319
.871	34.114	.751	.758	11.992	11.750	.924	15.820	12.648
.872	36.999	.755	.758	12.985	12.960	.926	17.131	13.704
.872	41.903	.761	.767	14.394	15.120	.913	18.767	16.560

Computed alternator windage loss, kW	Computed bearing friction loss, kW	BRU turbine power output, kW	Power balance on BRU rotor, kW	Turbine Reynolds number	Power balance, percent of ideal turbine power	Compressor Reynolds number	Power balance, percent of ideal compressor power
0.36	0.34	10.403	-0.157	46 700	-1.28	164 600	-3.64
.40	↓	13.708	-.104	59 800	-.65	211 600	-1.85
.44	↓	16.908	-.045	72 400	-.23	256 800	-.65
.46	↓	18.639	-.029	79 100	-.13	280 500	-.38
.47	↓	20.258	.145	85 300	.62	302 200	1.91
.51	↓	23.148	-.008	97 900	-.03	343 000	-.08
.55	↓	26.699	.259	110 300	.84	393 000	2.41
.59	↓	29.730	.332	122 600	.97	435 000	2.77
.61	↓	32.289	.504	132 600	1.36	470 000	3.88
.64	↓	36.548	.241	145 600	.58	531 900	1.68

ulated in table II. The data shown represent the ranges of compressor Reynolds number, corrected weight flow, speed, and total pressure ratio that were covered in testing the BRU. Shown also are the corrected weight flow for the compressor research package (CRP) at equivalent conditions of speed and pressure ratio. These data were obtained at a nominal constant Reynolds number of 251 000 (approximately design) and with an axial clearance of 4 percent of impeller exit blade height. The significance of axial clearance will be discussed subsequently.

Table II shows a range of compressor speed from 97.3 to 105.2 percent of design equivalent speed, a range of total pressure ratio from 1.789 to 1.969 and a range of Reynolds number from 165 000 to 532 000 was covered during BRU testing. Comparison of BRU compressor weight flow data with compressor research package data in the range of Reynolds number from 250 000 to 300 000 shows that BRU compressor weight flow is about 3.5 percent lower than the CRP weight flow. A study of the factors that could lead to a difference in weight flow between the BRU compressor and the CRP indicated that the operating axial clearance between the impeller exit and shroud, the seal leakage flows entering the compressor flow between the impeller and diffuser, and the manufacturing tolerances are major factors.

The inlet area of the BRU compressor vaned diffuser at room temperature was 0.8 percent larger than the CRP. CRP tests indicated that increasing diffuser throat area increases the corrected weight flow and thus the BRU should exceed the CRP flow by 0.6 percent. As discussed earlier, seal leakage flow, which was assumed to be 0.6 percent of compressor flow, should reduce BRU compressor flow by 0.6 percent. Thus these two effects counterbalance each other.

CRP tests at various axial clearances between impeller exit and shroud show that weight flow decreases as clearance is increased. The estimated operating axial clearance of the BRU compressor was 7.5 percent of impeller exit blade height as compared with 4 percent for the CRP. This difference in clearance should result in the BRU compressor weight flow being about 3.5 percent lower than the CRP at design Reynolds number.

Summing up the effects of seal leakage, manufacturing tolerances and increased axial clearances, it would be expected that BRU compressor flow would be about 3.5 percent lower than the CRP at design Reynolds number. Table II shows that, in fact, the BRU compressor flow was approximately 3.5 percent lower than the CRP. Compressor efficiencies at design Reynolds number and with an axial clearance of 7.5 percent are tabulated in table II for the first 10 operating points shown for subsequent use in the power balance that will be made on the BRU rotor. These efficiencies have also been reduced by 0.3 efficiency point to account for the effects of a compressor seal leakage flow of 0.6 percent.

The effect of Reynolds number on BRU compressor weight flow can be seen in the

variation of the weight flow ratio in table II. At a Reynolds number of 165 000, the weight flow ratio is 0.936 and increases to 0.980 at a Reynolds number of 532 000. The change in efficiency with changes in Reynolds number as found for the CRP are tabulated in table II with design Reynolds number as the reference point. These data show a negative correction in efficiency of 1.2 points at the lowest Reynolds number and increases to a positive correction of 1.4 points at the highest Reynolds number. Since no Reynolds number data were obtained for values above 280 000 the corrections for higher Reynolds numbers were obtained by extrapolation (as discussed in appendix B).

The computed efficiencies for the BRU compressor are shown in table III. These values are approximately 1.5 efficiency points higher than the measured efficiencies obtained by temperature and pressure measurements. Because of the relatively low temperature level and piping insulation, the temperature measurements are reliable and the external heat loss from the compressor is small. Since instrumentation and operating conditions are similar to those of the CRP tests, the measurement accuracy is comparable to that obtained in the CRP tests. Internal heat transfer is a possible source of error in the measured efficiency. When this heat transfer is taken into account, good agreement is obtained between measured and computed efficiency. The comparison is shown in table III. The average difference between the computed efficiencies and the measured efficiencies corrected for heat transfer is 0.5 efficiency point. The method of correcting for internal heat transfer is given in appendix B.

The close agreement between efficiencies computed by two different methods is an indication that the compressor efficiency has been established within close limits. Another factor that tends to establish confidence in the computed efficiency at design Reynolds number is the fact that the sum of the corrections to the original performance maps is small. The total correction for clearance and bleed flow is only 1.5 percent. A large error in these estimates would produce a relatively small error in compressor efficiency.

Power Balance on BRU Rotor

Tabulated in table III are turbine and compressor efficiencies from table I and II, respectively. These efficiencies were obtained for test runs with turbine inlet temperatures close to the design value of 1144 K and compressor inlet temperatures close to the design value of 300 K. These efficiencies have been corrected for Reynolds number changes as discussed earlier. The turbine efficiencies listed are for an axial clearance of 12 percent rotor inlet blade height, and the compressor efficiencies listed are for an axial clearance of 7.5 percent of impeller outlet blade height. Shown also in table III are ideal power for the BRU turbine and compressor, measured alternator output, alter-

nator efficiency (from alternator research package), computed alternator windage, and computed gas bearing friction losses. A detailed discussion of the power balance calculations is given in appendix B.

The column headed "Power Balance on the BRU Rotor" was obtained by summing compressor and alternator input power, computed alternator windage and computed gas bearing friction losses, and subtracting this sum from the turbine output power. The power balance on the BRU rotor has a negative value of 0.157 kilowatt at the lowest Reynolds number and increases to values of about 0.3 kilowatt at the higher Reynolds numbers. The negative value of computed net shaft power means that there is a deficit in computed turbine output power; positive values indicate a surplus in computed turbine output power.

One possible explanation for the change from negative to positive could be that the change in turbomachinery efficiency over the range in Reynolds number tested is not as great as indicated by the research package tests. One factor that would tend to reduce the effect of Reynolds number on turbine and compressor efficiency is the internal heat flow within the package. Heat flows from the turbine toward the compressor. The compressor rotor is used as a heat sink. The amount of heat flow increases with Reynolds number. The heat that is transferred causes a slight loss in turbine and compressor efficiency. As Reynolds number increases, the loss in turbine output power and the increase in required compressor input power due to heat transfer both increase. Another explanation is that leakage flows could cause greater losses at high Reynolds number where boundary layers are relatively thin and have less effect where they are relatively thick at low Reynolds number. Thus leakage flows might make the variation in efficiency with Reynolds number in the BRU less than that found for the research packages.

The other possibility is experimental accuracy in determining the variation of efficiency with Reynolds number. The power balance is very close to zero near the design values of turbine and compressor Reynolds number. The maximum correction for Reynolds number is about 1 efficiency point for both turbine and compressor. These corrections are apparently too high, and lower values will improve the power balance.

In table III, the power balance discrepancies are given in terms of percent of ideal turbine power. The average absolute value is 0.67 percent. This check indicates that there is no gross error in the computed BRU turbine efficiency. At design Reynolds number, the turbine computed efficiency is 0.860 and the compressor efficiency is 0.745.

The total efficiency values from research package tests at BRU equivalent design conditions are 89.4 percent for the turbine and 80 percent for the compressor. The reduction in BRU turbomachinery efficiency from that reported for the research package is due to increased axial clearance, effects of seal leakage flows, and the fact that the compressor was operating at off-design conditions. The off-design operation resulted from pressure losses in the test loop being lower than the design values for the space

power system. As a result of the lower pressure losses, the turbine and compressor operated at higher than design equivalent weight flows. Increasing the BRU compressor equivalent flow moves the compressor operating point toward open throttle (see fig. 5). This in turn reduces the efficiency by 4 points. On the other hand, increasing the BRU turbine equivalent flow does not change the turbine efficiency because the efficiency characteristic is very flat in this region of operation.

SUMMARY OF RESULTS

Turbomachinery performance of the BRU was investigated while it was operating as part of a closed loop to simulate operation in a Brayton space power system. An estimate was made of the turbine and compressor efficiency over a range of operating pressure at approximately design equivalent speed and design inlet temperature. These estimates were made from performance maps obtained from individual research packages of each turbomachinery component. These maps were obtained at nominally design Reynolds number and with rotor axial clearances that were different from that used in the BRU. Corrections based on experimental data from the research packages for the differences in the axial clearance, Reynolds number, and seal leakage were applied to these maps. These efficiencies were checked by performing a power balance on the BRU rotor. The results of this investigation may be summarized as follows:

1. At design Reynolds number the turbine efficiency was indicated to be 0.860 compared with 0.894 for the turbine research package at equivalent design conditions.

2. At design Reynolds number the compressor efficiency was indicated to be 0.745 compared with 0.800 for the compressor research package at equivalent design conditions.

3. These efficiencies are lower than the values indicated by the component research package tests at BRU design equivalent conditions. These differences were attributed to effects caused by operation at axial clearances that were larger than used in the research package, seal leakage flows, and off-design operation. The off-design operation resulted from test facility pressure losses being lower than design values for the space power system. The lower pressure losses moves the compressor operating point to a lower value of efficiency.

Lewis Research Center,
National Aeronautics and Space Administration,
Cleveland, Ohio, June 7, 1971,
120-27.

APPENDIX A

SYMBOLS

C_p specific heat at constant pressure, J/(kg)(K)

D tip diameter, m

g gravitational constant

Δh specific work, J/g

M molecular weight

P total pressure, N/cm^2

q rate of heat transfer, J/sec

Re Reynolds number, $W/\mu r$

r tip radius, m

T total temperature, K

U tip speed, m/sec

V_j ideal jet speed corresponding to total-to-static pressure ratio across turbine, m/sec

W weight flow, kg/sec

η total efficiency (based on inlet-total-to-exit-total-pressure ratio)

μ gas viscosity, kg/(m)(sec)

ν blade-jet speed ratio, U/V_j

ρ gas density, kg/m^3

Subscripts:

in inlet

id ideal

out outlet

t turbine

c compressor

APPENDIX B

POWER BALANCE

Turbine Calculations

Predicted weight flow. - At room temperature, the nozzle throat area of the BRU turbine was 0.6 percent greater than the TRP. At design temperature, thermal expansion produces an additional increase in the BRU nozzle throat area. Both nozzles are constructed of Inconel 713 with a linear expansion coefficient of 14.9×10^{-6} per K. A difference in metal temperature between the BRU and TRP of about 750 K is indicated by available data. This temperature difference produces a linear expansion of 1.12 percent and an area increase of 2.2 percent. Tests in which the turbine nozzle area was varied by changing setting angles indicate that there is approximately a one for one relationship between percent changes in nozzle throat area and percent changes in equivalent weight flow.

The operating axial clearance of the BRU turbine was computed to be 6 percent of rotor inlet blade height. This figure was based on measured axial clearance during assembly, thrust bearing film thickness during operation, and the contractor's estimate of relative thermal expansion caused by heating from room temperature to operating temperature. The TRP was tested at design clearance of 2.6 percent. The effect of clearance on weight flow is reported in reference 11. According to figure 8 of reference 11, the increase in clearance from 2.6 percent should decrease weight flow by about 0.6 percent.

The combined effects of area variations due to manufacturing tolerances, thermal expansion and rotor axial clearance should cause the BRU turbine equivalent weight flow to exceed TRP flow by 2.2 percent.

Turbine power. - The measured BRU turbine equivalent weight flows were compared with those of the TRP at the same total pressure ratios and corrected speeds. The TRP performance map shown in figure 4 was used for the comparison. This map was obtained at design Reynolds number with a rotor tip clearance of 2.6 percent of rotor outlet blade height. The map was drawn from unpublished TRP data. The BRU turbine weight flow was about 0.7 percent greater than TRP flow at design Reynolds number, compared with 2.2 percent greater as computed above. Thus, a 1.5 percent discrepancy exists. According to figure 8 of reference 11, the actual hot operating clearance would have to be about 12 percent instead of 6 percent to reduce BRU turbine equivalent weight flow to only 0.7 percent larger than the TRP. An efficiency that corresponds to an axial clearance of 12 percent was used in the turbine power calculations.

Unpublished TRP data were used to obtain the plot of efficiency as a function of

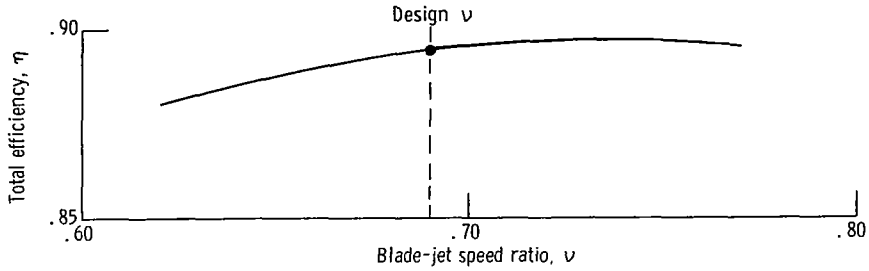

Figure 6. - Variation of turbine research package total efficiency with blade-jet speed ratio.

blade-jet speed ratio shown in figure 6. These data were obtained at design clearance of 2.6 percent and design Reynolds number. Efficiencies obtained from figure 6 and listed in table I were reduced by 3.3 efficiency points to account for operation at 12 percent axial clearance. The correction of 3.3 efficiency points was obtained from figure 7 of reference 11.

Reynolds number corrections, which varied between a negative 1.1 efficiency point and a positive 1.3 efficiency point, were obtained from figure 14 of reference 2 and tabulated in table I. Estimated BRU turbine total efficiency, corrected for Reynolds number and operation at an axial clearance of 12 percent are tabulated in table III. The ideal specific work,

$$\Delta h_{id} = C_p T_{in} \left[1 - \left(\frac{P_{out}}{P_{in}} \right)^{(\gamma-1)/\gamma} \right]$$

was obtained from the measured total pressure ratio and turbine inlet temperature. Turbine output power was obtained from the ideal specific work, the measured weight flow, and the estimated turbine efficiency from the following equation and tabulated in table III. Power $= W_t \Delta h_{id} \eta_t$.

Compressor Calculations

Weight flow. - At room temperature, the diffuser throat area of the BRU was 0.8 percent greater than the CRP. Unpublished CRP tests indicate that an increase of 1 percent in throat area increases the flow by about 0.75 percent. Therefore, an 0.8-percent area increase is equivalent to a 0.6 percent increase in weight flow. No allowance for thermal expansion of the stator is required, since the BRU compressor and the CRP were operated at approximately the same inlet temperature.

Total seal leakage flow into the BRU was 1.2 percent. Half of this flow was

assumed to enter the compressor. Unpublished CRP data indicate a 1-percent decrease in weight flow for a 1-percent bleed flow. The assumed bleed flow of 0.6 percent would be equivalent to a weight flow reduction of 0.6 percent.

The operating axial clearance of the BRU compressor was computed from the measured axial clearance during assembly, thrust film thickness during operation, and the contractor's estimates of relative thermal expansion caused by heating from room temperature to operating temperature.

The CRP was tested at various clearance values at design Reynolds number to determine the effect of clearance on corrected weight flow and efficiency. These data have not been published. The data used to determine the effect of clearance on corrected weight flow is shown in figure 7. Corrected weight flow is plotted against change in

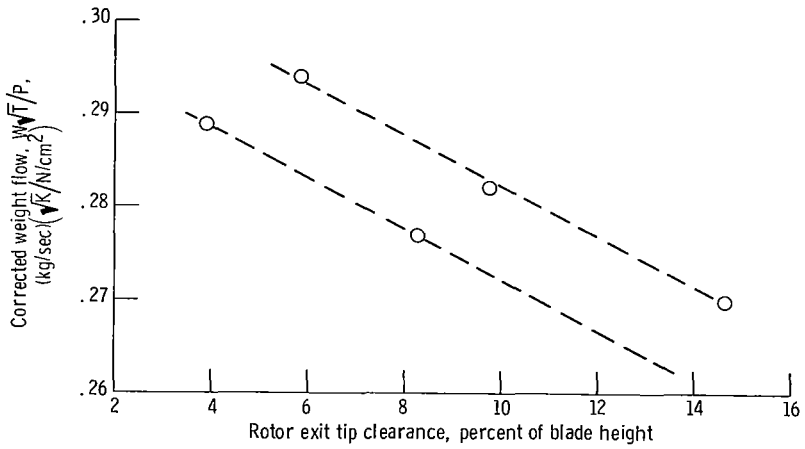

Figure 7. - Estimated variation of compressor research package corrected weight flow with axial clearance. Total pressure ratio, 1.9; nominal Reynolds number, 251 000.

axial clearance at a pressure ratio of 1.9. Although the data are scattered, the slope of the data band indicates a 1-percent decrease in compressor weight flow for each 1-percent increase in axial clearance. The increase in axial clearance from 4 to 7.5 percent would result in a 3.5 percent decrease in equivalent weight flow.

The combined effects of area variations due to manufacturing tolerances, seal leakage flow, and impeller clearance should cause the BRU compressor equivalent weight flow to be about 3.5 percent lower than the CRP flow.

Compressor power. - The actual BRU Compressor equivalent weight flows were compared with those of the CRP at the same total pressure ratios and equivalent speeds. Figure 5 was obtained by interpolation and extrapolation of the 90 and 100 percent speed lines of the data presented in reference 4. These data were obtained at design Reynolds

number and an axial clearance of 4 percent of impeller exit blade height. The BRU compressor weight flows at design Reynolds number were about 3.5 percent lower than corresponding points shown in figure 5. Since the weight flow predicted above for 7.5-percent clearance is 3.5 percent lower than CRP flow, an efficiency loss associated with an axial clearance to 7.5 percent will be used.

The efficiency correction curve for axial clearance effects is shown in figure 8 for a pressure ratio of 1.9. Figure 8 is a cross plot of curves of efficiency as a function

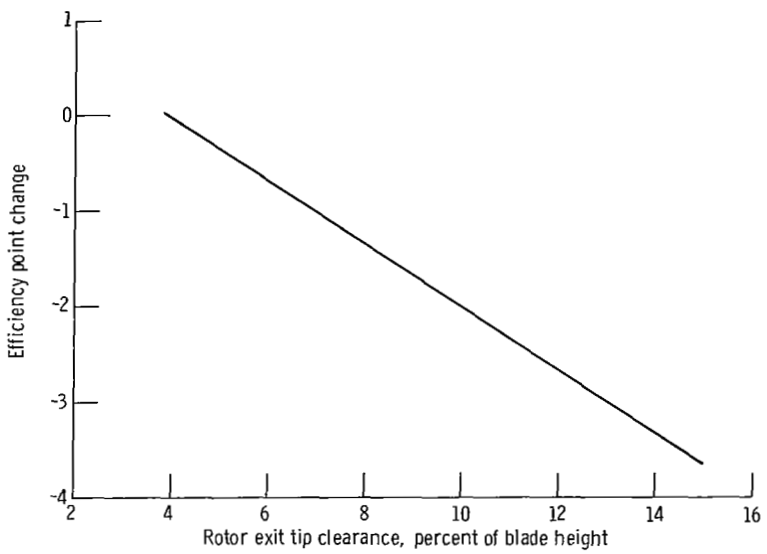

Figure 8. - Variation of compressor research package total efficiency with axial clearance. Total pressure ratio, 1.90; nominal Reynolds number, 251 000.

of equivalent weight flow and pressure ratio as function of equivalent weight flow for various clearances. The efficiency correction for a change from 4 to 7.5 percent clearance is 1.2 efficiency points. The efficiencies shown in figure 5 were corrected for 1.2 efficiency point loss to account for increased axial clearance in the BRU and 0.3 efficiency point for seal leakage effects and tabulated in table II.

Reynolds number corrections were obtained from unpublished CRP data. For these corrections, Reynolds number is defined as

$$Re = \frac{\rho_{in} UD}{\mu_{in}}$$

This form of Reynolds number was used in the original data. Figure 9 is a cross plot of curves of efficiency as function of percent design equivalent weight flow for various

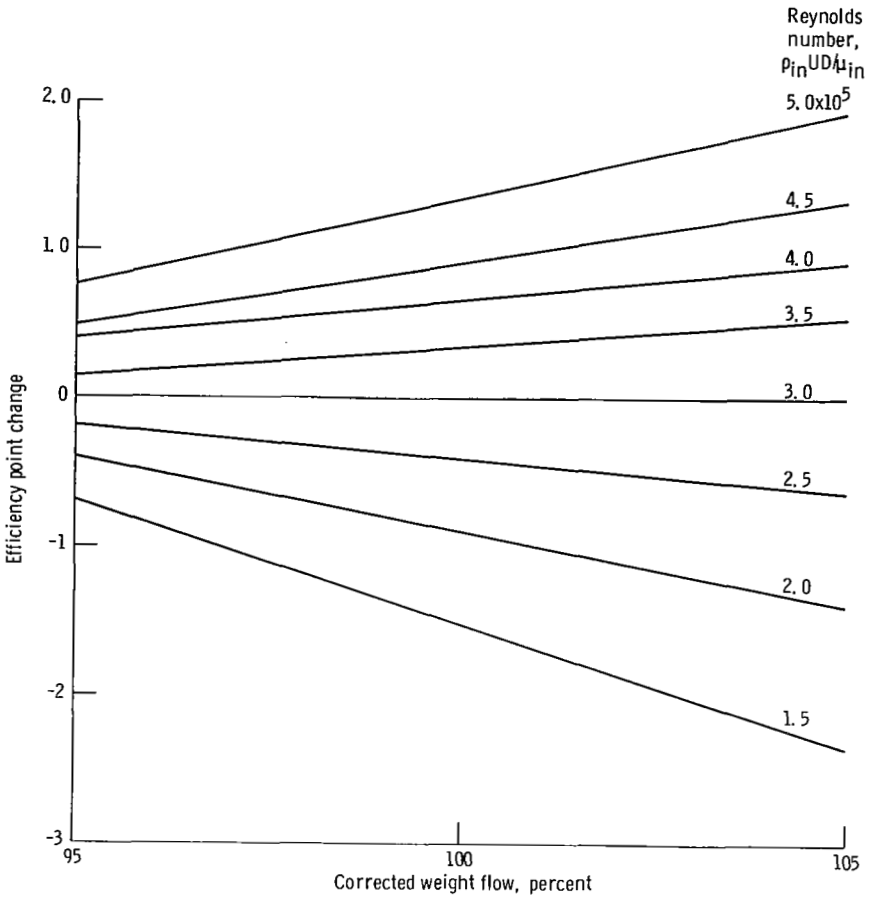

Figure 9. - Variation of compressor research package efficiency with Reynolds number over range of corrected weight flow.

values of Reynolds number. The Reynolds number data were obtained at 96 percent design equivalent speeds while the BRU compressor operated at 101 to 105 percent. In order to use the Reynolds number data, the BRU compressor equivalent weight flows were converted to the corresponding flows at 96 percent design equivalent speed. This was done by entering figure 5 with the BRU compressor equivalent speed and pressure ratio, then following a constant efficiency line to 96 percent speed and reading the equivalent weight flow.

Using the method described the Reynolds number correction from a negative 1.2 efficiency points to a positive 1.4 efficiency points are tabulated in table II. Estimated BRU compressor efficiency corrected for Reynolds number effects, seal leakage flow effects, and axial clearance effects are tabulated in table III.

The compressor input power was computed from the ideal specific work,

$$\Delta h_{id} = C_p T_{in} \left[\left(\frac{P_{out}}{P_{in}} \right)^{(\gamma-1)/\gamma} - 1 \right]$$

compressor weight flow, and the estimated compressor efficiency by the following equation:

$$\text{Power} = W_c \Delta h_{id} \eta_c$$

In order to check the computed BRU compressor efficiencies, the measured efficiencies were corrected for the calculated internal heat into the BRU compressor. This heat flow into the impeller causes an error in the measured efficiency. The amount of error depends on the heat flux distribution in the impeller, which is unknown. However, the effect of adding all of the heat flow at the impeller inlet or at the impeller exit can be computed. The compressor efficiency is the ideal specific work divided by the actual specific work $\Delta h_{id}/\Delta h$. The compressor efficiency formula is

$$\eta = \frac{C_p T_{in} \left[\left(\frac{P_{out}}{P_{in}} \right)^{(\gamma-1)/\gamma} - 1 \right]}{C_p (T_{out} - T_{in})}$$

At any point of heat addition, the gas temperature would be increased by ΔT, where $\Delta T = q/WC_p$. If all the heat were added at the impeller inlet, the temperature rise ΔT would not be detected by the thermocouples at the inlet flange. The true effective inlet temperature would be $T_{in} + \Delta T$ and the measured ideal specific work, Δh_{id}, must be multiplied by a correction factor of $(T_{in} + \Delta T)/T_{in}$. The measured temperature rise across the compressor would be too large by an amount ΔT. The actual specific work, Δh, must be multiplied by a correction factor of $[T_{out} - (T_{in} + \Delta T)]/(T_{out} - T_{in})$. If all the heat were added at the outlet, the measured Δh_{id} would be correct but the measured temperature rise would still be in error, and Δh must be multiplied by the factor $[T_{out} - (T_{in} + \Delta T)]/(T_{out} - T_{in})$.

In the BRU, heat flowing into the rotor is transferred to the gas over the entire surface of the rotor. Therefore, the true correction factor is in between these two factors. The correction factor used was the average for heat added at the rotor inlet and heat added at the rotor outlet. The measured efficiency is multiplied by the factor

$$0.5\left(\frac{2+\frac{\Delta T}{T_{in}}}{1-\frac{\Delta T}{T_{out}-T_{in}}}\right)$$

The temperature rise, ΔT, was computed from heat-transfer calculations in reference 2. This reference presents the heat flow into the compressor impeller for design conditions at power levels of 2.25, 6.0, and 10.5 kilowatts. Compressor operating conditions are also presented. From this information, weight flow, ΔT, and Reynolds number were computed for the three power levels. Reynolds number was then plotted against ΔT.

Bearing Losses

Thrust bearing. - Thrust bearing losses were obtained from curves computed by the contractor and presented in reference 2. These curves showed power loss as a function of clearance for 36 000 rpm and a gas viscosity of 3.52×10^{-5} kilogram per meter per second. Thrust clearances during operation were approximately 1.02×10^{-3} centimeter for the compressor side of the thrust runner and 5.32×10^{-3} centimeter for the turbine side. Power losses were 185 watts for the compressor side and 46 watts for the turbine side.

Journal bearing. - Journal bearing losses were obtained from curves computed by the contractor and presented in reference 2. Film thickness was obtained from curves of pad load as a function of film thickness for various bearing ambient pressures. Bearing losses were obtained from curves of loss as a function of film thickness for various ambient pressures. Total journal bearing loss was 110 watts for all test runs used in this report.

Windage losses. - Computed rotor windage losses were obtained from reference 2. Losses for power levels of 2.25, 6.0, and 10.5 kilowatts were 360, 470, and 650 watts, according to reference 2. Bearing ambient pressures were obtained for these three power levels and a curve of loss as a function of ambient pressure was drawn through these three points.

Alternator Power

The alternator efficiency was obtained from reference 12, which presents curves

of efficiency as a function of power output for various power factors. The BRU alternator operated at a power factor of 0.95. Alternator output power was measured except for the portion required to operate the voltage regulator/excitor (VRE). VRE power consumption was determined by alternator research package tests and was approximately constant at 50 watts. Alternator shaft power was computed by adding 50 watts to the measured output power and dividing the sum by the alternator efficiency.

REFERENCES

1. Klann, John L.; and Wintucky, William J.: Status of 2 to 15 kWe Brayton Power System and Potential Gains From Component Improvements. NASA TM X-67835, 1971.

2. Davis, J. E.: Design and Fabrication of the Brayton Rotating Unit (BRU). NASA CR-1870, 1971.

3. Nusbaum, William J.; and Kofskey, Milton G.: Cold Performance Evaluation of 4.97-Inch Radial-Inflow Turbine Designed for Single-Shaft Brayton Cycle Space-Power Systems. NASA TN D-5090, 1969.

4. Weigel, Carl, Jr.; Tysl, Edward, R.; and Ball, Calvin L.: Overall Performance in Argon of 4.25-Inch Sweptback-Bladed Centrifugal Compressor. NASA TM X-2129, 1970.

5. Wong, Robert Y.; Klassen, Hugh A.; Evans, Robert C.; and Winzig, Charles H.: Preliminary Investigation of a Single-Shaft Brayton Rotating Unit Designed for a 2- to 10-Kilowatt Space Power Generation System. NASA TM X-1869, 1969.

6. Evans, Robert C.; and Meyer, Sheldon J.: Electrical Performance of a 2- to 10-Kilowatt Brayton Rotating Unit. NASA TM X-2062, 1970.

7. Anon.: Design and Fabrication of the Brayton Cycle High Performance Turbine Research Package. Rep. APS-5281-R, AiResearch Mfg. Co. (NASA CR-72478), Feb. 14, 1968.

8. Anon.: Design and Fabrication of the Brayton Cycle High Performance Compressor Research Package. Rep. APS-5269-R, AiResearch Mfg. Co. (NASA CR-72533), Nov. 29, 1967.

9. Wong, Robert Y.; Klassen, Hugh A.; Evans, Robert C.; and Winzig, Charles H.: Effect of Operating Parameters on Net Power Output of a 2- to 10-Kilowatt Brayton Rotating Unit. NASA TN D-5815, 1970.

10. Kofskey, Milton G.; and Nusbaum, William J.: Effects of Specific Speed on the Experimental Performance of a Radial-Inflow Turbine. NASA TN D-6182, 1971.

11. Futral, Samuel M.; and Nusbaum, William J.: Effect of Axial Running Clearance on Performance of Two Brayton Cycle Radial Inflow Turbines. NASA TM X-52552, 1969.

12. Repas, David S.; and Edkin, Richard A.: Performance Characteristics of a 14.3-Kilovolt-Ampere Modified Lundell Alternator for 1200 Hertz Brayton-Cycle Space-Power System. NASA TN D-5405, 1969.

NASA-Langley, 1971 — 3 E-6343

NATIONAL AERONAUTICS AND SPACE ADMISTRATION
WASHINGTON, D.C. 20546

OFFICIAL BUSINESS
PENALTY FOR PRIVATE USE $300

FIRST CLASS MAIL

POSTAGE AND FEES PAID
NATIONAL AERONAUTICS AND
SPACE ADMINISTRATION

U.S.MAIL

011B 01 C2 UL 03 710910 S00903DS 720401
DEPT OF THE AIR FORCE
AF SYSTEMS COMMAND
AF WEAPONS LAB (WLOL)
ATTN: E LOU BOWMAN, CHIEF TECH LIBRARY
KIRTLAND AFB NM 87117

POSTMASTER: If Undeliverable (Section 158 Postal Manual) Do Not Return

"The aeronautical and space activities of the United States shall be conducted so as to contribute . . . to the expansion of human knowledge of phenomena in the atmosphere and space. The Administration shall provide for the widest practicable and appropriate dissemination of information concerning its activities and the results thereof."

—NATIONAL AERONAUTICS AND SPACE ACT OF 1958

NASA SCIENTIFIC AND TECHNICAL PUBLICATIONS

TECHNICAL REPORTS: Scientific and technical information considered important, complete, and a lasting contribution to existing knowledge.

TECHNICAL NOTES: Information less broad in scope but nevertheless of importance as a contribution to existing knowledge.

TECHNICAL MEMORANDUMS: Information receiving limited distribution because of preliminary data, security classification, or other reasons.

CONTRACTOR REPORTS: Scientific and technical information generated under a NASA contract or grant and considered an important contribution to existing knowledge.

TECHNICAL TRANSLATIONS: Information published in a foreign language considered to merit NASA distribution in English.

SPECIAL PUBLICATIONS: Information derived from or of value to NASA activities. Publications include conference proceedings, monographs, data compilations, handbooks, sourcebooks, and special bibliographies.

TECHNOLOGY UTILIZATION PUBLICATIONS: Information on technology used by NASA that may be of particular interest in commercial and other non-aerospace applications. Publications include Tech Briefs, Technology Utilization Reports and Technology Surveys.

Details on the availability of these publications may be obtained from:

SCIENTIFIC AND TECHNICAL INFORMATION OFFICE

NATIONAL AERONAUTICS AND SPACE ADMINISTRATION

Washington, D.C. 20546