View metadata, citation and similar papers at core.ac.uk
brought to you by CORE
provided by Archivio della Ricerca - Università di Pisa

XXII Congresso AIMETA, Genova, 14-17 settembre 2015

An elastic interface model of the mixed bending-tension (MBT) test

Stefano Bennati[1], Paolo Fisicaro[1], Luca Taglialegne[1], Paolo S. Valvo[1]

[1]*Department of Civil and Industrial Engineering, University of Pisa, Italy*

E-mail: *s.bennati@ing.unipi.it, paolo.fisicaro@ing.unipi.it, luca.taglialegne@ing.unipi.it, p.valvo@ing.unipi.it*

Keywords: Composite laminates, delamination, interface model, experimental testing.

SUMMARY. The *mixed bending-tension* (MBT) test has been introduced by Macedo *et al*. to assess the interlaminar fracture toughness of laminates with low bending stiffness and strength in the longitudinal direction. In the experimental setup, the delaminated specimen is adhesively bonded to two pin-loaded metal beams. We have developed a mechanical model of the test, where the specimen is modelled as an assemblage of two beams connected by an elastic interface, while the metal beams are modelled as rigid beams. An analytical solution has been obtained by applying classical beam theory. Furthermore, to better describe the experimental results, we have developed also a cohesive zone model based on a bilinear traction-separation law.

1 INTRODUCTION

Delamination is a major failure mode for fibre-reinforced composite laminates. Within the context of linear elastic fracture mechanics (LEFM), the propagation of delaminations is commonly predicted based on the energy release rate, G. Several experimental procedures and testing setups have been developed to assess delamination toughness under pure and mixed fracture modes [1]. However, while standard testing procedures exist for unidirectional (UD) laminated specimens with 0°-oriented fibres, the development of new testing procedures for multidirectional laminates is still an open issue [2, 3].

The *double cantilever beam* (DCB) test is the simplest and most commonly used testing method to determine the delamination toughness of laminated specimens under mode I. For UD laminates the DCB test has been standardised by ISO [4] and other standards development organisations. Nevertheless, its use turns out to be problematic – or impossible at all – when applied to materials with very low bending stiffness and strength, as the failure of the arms in bending may anticipate delamination growth [5]. To overcome this drawback – in particular, for specimens with 90°-oriented fibres – Macedo *et al.* [6] have proposed a *mixed bending-tension* (MBT) test, where the specimen is adhesively bonded to two pin-loaded metal beams (Fig. 1).

Following the same approach used for the *asymmetric double cantilever beam* (ADCB) [7] and *mixed mode bending* (MMB) tests [8], we have developed a mechanical model of the MBT test, where the specimen is modelled as an assemblage of two beams connected by an elastic interface. The metal beams that transfer the load to the specimen are instead modelled as rigid beams. An analytical solution has been obtained by applying classical beam theory. The elastic interface model is able to predict the initial linearly elastic response, but not delamination growth. To this aim, we have developed also a cohesive zone model based on a bilinear traction-separation law, which turns out to be effective in reproducing some experimental results of the literature.

2 LINEAR ELASTIC INTERFACE MODEL

2.1 *Mechanical model*

In the MBT test, a laminated specimen with a pre-implanted delamination of length a_0 is adhesively bonded to two equal metal beams, each of thickness t. The beams transfer the load, P, applied by the testing machine, to the specimen (Fig. 1). We denote with l, b, and $2h$ the specimen's length, width, and thickness, respectively. The loading pins are placed at a distance d from the left-hand end section of the specimen. A global reference system, $Oxyz$, is defined with its origin at the centre of the specimen's left-hand end section, and the x- and z-axes aligned with the specimen's longitudinal and transverse directions, respectively.

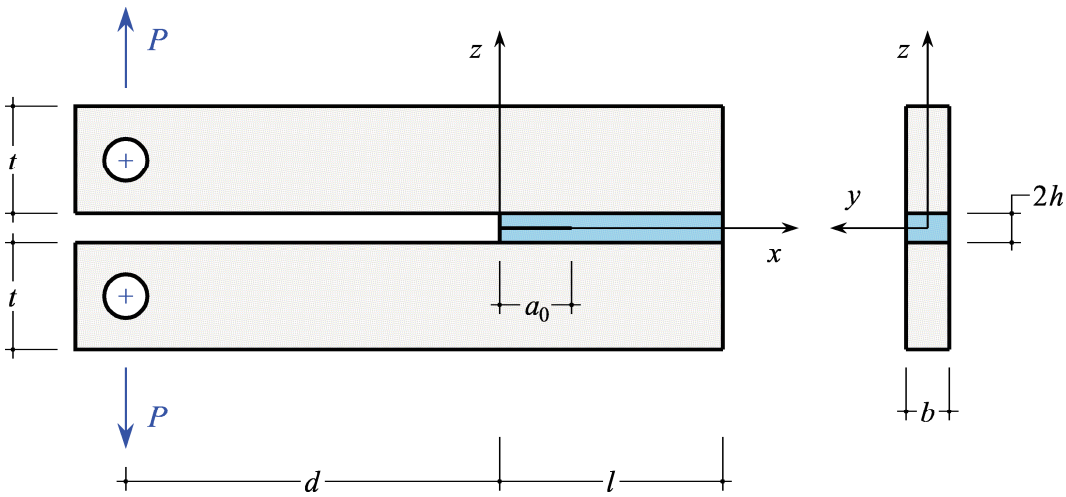

Figure 1: The MBT test specimen.

The delamination divides the specimen into two sublaminates of same thickness and mechanical properties. In our mechanical model, we assume that the sublaminates are connected by an interface of negligible thickness, regarded as a continuous distribution of linearly elastic springs. Given the symmetry of the system with respect to the specimen's mid-plane, no shear stresses are transmitted through the interface. Hence, we consider that the distributed springs act along the normal direction to the interface plane only. Accordingly, the normal interfacial stress is

$$\sigma(x) = k_z \Delta w(x), \quad x \in [a_0, l], \tag{1}$$

where k_z is the springs' elastic constant and Δw is the corresponding transverse relative displacement.

Thanks to the symmetry, analysis can be limited to the upper half of the system (Fig. 2). Hence,

$$\Delta w(x) = 2w_1(x), \tag{2}$$

where w_1 is the upper sublaminate's mid-plane displacement in the transverse direction.

We assume that the displacement of the specimen is led by that of the rigid beam, so that it can be expressed as follows:

$$w_1(x) = \frac{\delta}{2} - (d + x)\theta\,, \tag{3}$$

where θ and δ respectively represent the rigid rotation and translation of the beam. In particular, $\delta/2$ is the displacement of the load application point (at $x = -d$).

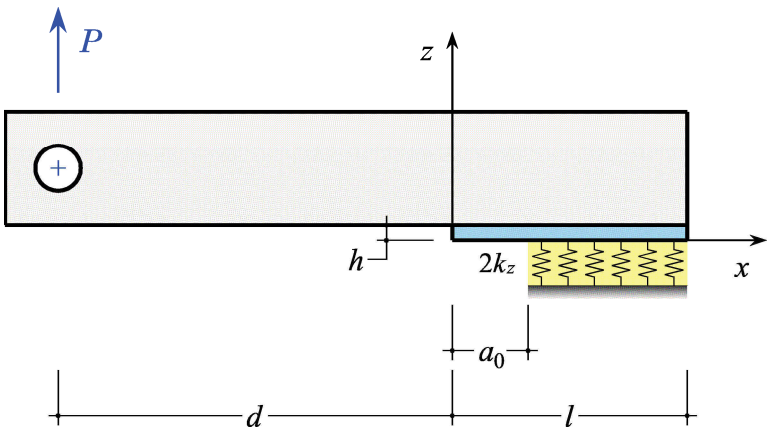

Figure 2: Schematics of the upper half of the system.

Static equilibrium of the system requires that

$$P = \int_a^l b\sigma(x)\,\mathrm{d}x \tag{4}$$

$$Pd = -\int_a^l b\sigma(x)\,x\,\mathrm{d}x\,. \tag{5}$$

By substituting Eq. (3) into (1) and (2), and the result into (4) and (5), a linear equation set is obtained, whose solution yields θ and δ. As a final result, we obtain the expressions of the transverse displacement,

$$w_1(x) = -\frac{3P}{bk_z}\frac{a+2d+l}{(l-a)^3}x + \frac{P}{bk_z}\frac{2a^2+(3d+2l)a+3dl+2l^2}{(l-a)^3} \tag{6}$$

and normal interfacial stress,

$$\sigma(x) = -6\frac{P}{b}\frac{a+2d+l}{(l-a)^3}x + 2\frac{P}{b}\frac{2a^2+(3d+2l)a+3dl+2l^2}{(l-a)^3}\,. \tag{7}$$

2.2 *Specimen's compliance and energy release rate*

Within the linearly elastic load-deflection response, the specimen's compliance is defined as $C = \delta / P$, where P is the applied load and δ is the displacement of the load application point [1]. For the MBT test, $\delta = 2w_1(-d)$ and the specimen's compliance results

$$C = \frac{4}{bk_z} \frac{a^2 + (3d + l)a + 3d^2 + 3dl + l^2}{(l - a)^3}. \tag{8}$$

Within LEFM, the energy release rate is defined as $G = -\mathrm{d}V / \mathrm{d}A$, where V is the total potential energy of the system and $\mathrm{d}A = b\,\mathrm{d}a$ is the area of the new surface created by crack advancement [1]. In this case, the well-known Irwin-Kies [9] relationship yields

$$G = \frac{P^2}{2b} \frac{\mathrm{d}C}{\mathrm{d}a}. \tag{9}$$

By substituting Eq. (8) into (9), the following expression is obtained

$$G_\mathrm{I} = \frac{2P^2}{b^2 k_z} \frac{(3d + 2l + a)^2}{(l - a)^4}, \tag{10}$$

where the subscript I highlights the fact that the fracture propagates in pure mode I during the test.

3 COHESIVE ZONE MODEL

The linear elastic interface model presented in the previous section can be used successfully to predict the experimental response in the initial linear elastic stage prior to the onset and propagation of the delamination crack. The latter phenomena involve material damage and fracture, which both can be taken into account by the assumption of a cohesive zone model [10].

Here, we assume that the dependence of the interfacial normal stress, σ, on the relative displacement, Δw, can be described by a bilinear cohesive law (Fig. 3).

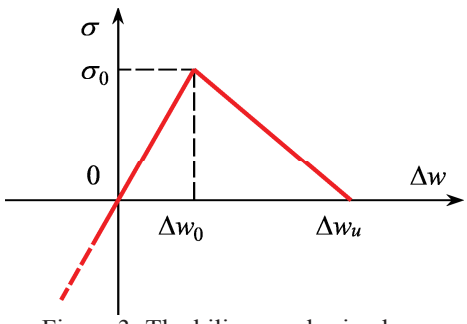

Figure 3: The bilinear cohesive law.

An unlimited linear elastic response is assumed in compression, while in tension the normal stress cannot exceed the value σ_0, corresponding to the relative displacement Δw_0. For relative

displacements included between Δw_0 and Δw_u, a softening behaviour is assumed, corresponding to progressive material damage. For a relative displacement greater than Δw_u, fracture occurs.

According to the above, Eq. (1) is modified as follows:

$$\sigma(x)=\begin{cases}\sigma_0\dfrac{\Delta w(x)}{\Delta w_0}, & \Delta w(x)\le\Delta w_0\\ \sigma_0\dfrac{\Delta w_u-\Delta w(x)}{\Delta w_u-\Delta w_0}, & \Delta w_0<\Delta w(x)\le\Delta w_u\,,\quad x\in[a_0,l]\,,\\ 0, & \Delta w_u<\Delta w(x)\end{cases}\tag{11}$$

Eqs. (2) through (5) still hold and can be used to determine the response of the specimen beyond the linearly elastic behaviour. For the sake of brevity, we omit here the details of the calculations that involve substitution of Eq. (11) into the static equilibrium Eqs. (4) and (5) to determine the values of δ and θ during the various stages of response. Actually, three stages can be individualised in the specimen's response:

- *Stage I – Linearly elastic behaviour.* As long as the opening displacement at the crack tip, $\Delta w(a)$, is less than Δw_0, the specimen's response is linearly elastic. Neither material damage, nor crack propagation occur during this stage;
- *Stage II – Progressive material damage.* When the opening displacement at the crack tip attains the value Δw_0, damage of the material begins. As the test proceeds further, a damaged zone of increasing length, c, develops ahead of the crack tip, while the delamination length is constantly equal to a_0 (Fig. 4). Correspondingly, the length of the zone where the material is still linearly elastic decreases;
- *Stage III – Crack propagation.* When the opening displacement at the crack tip equals Δw_u, fracture occurs. Then, the delamination length, a, increases and the damaged zone changes its length accordingly, until complete delamination of the specimen is reached.

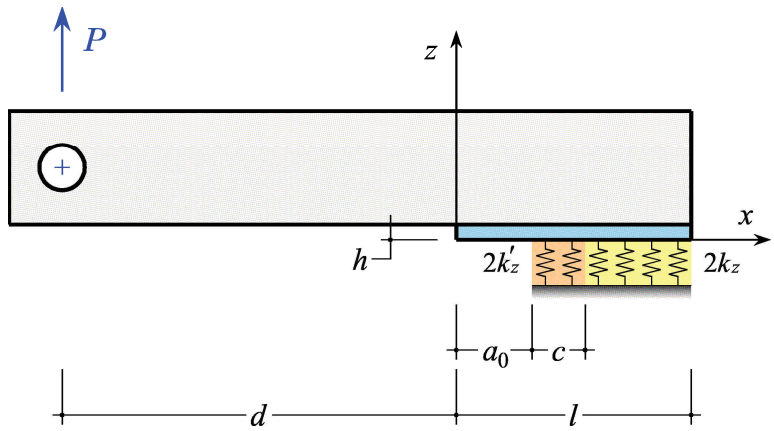

Figure 4: Stage II: the development of the damaged zone at the crack tip.

4 COMPARISON WITH EXPERIMENTAL RESULTS

By way of illustration, we consider an experimental study by Macedo *et al.* [6], who report on the results of MBT tests on carbon/epoxy unidirectional $[0]_{26}$ and $[90]_{26}$ laminated specimens. The considered specimen had span l = 40 mm, width b = 20 mm, and thickness $2h$ = 4 mm; the initial delamination length was a_0 = 25 mm, obtained by inserting a 13 μm PTFE film at laminate half-thickness during lamination. The metal beams were made of S235 structural steel and had thickness t = 19 mm. The loading pins were placed at a distance d = 100 mm from the left-hand end section of the specimen. The tests were conducted under imposed displacement conditions. The main objective of the study was to obtain fracture initiation values, G_{Ic}, so that the albeit small crack propagation length did not represent a problem.

The parameters characterising our mechanical model can all be determined from the experimental results presented in [6]. In what follows we limit to the 0° unidirectional laminated specimens, but the same procedure can be applied for the 90° laminated specimens. Firstly, the value of the interface elastic constant, $k_z = \sigma_0/\Delta w_0$ is obtained by applying a compliance calibration strategy [11]. By inverting Eq. (8), we obtain

$$k_z = \frac{4}{b}\frac{a^2 + (3d + l)a + 3d^2 + 3dl + l^2}{(l-a)^3}\frac{1}{C}. \tag{12}$$

By using in Eq. (12) the value of compliance, C_{exp}, measured during the experimental test (in particular, at the end of the apparent linear elastic response), we obtain k_z = 1275.8 N/mm^3. This value also corresponds to σ_0 = 32.3 MPa and Δw_0 = 0.025 mm. The ultimate relative displacement was determined as Δw_u = 0.045 mm by matching the theoretical and experimental values of displacement that correspond to the maximum applied load.

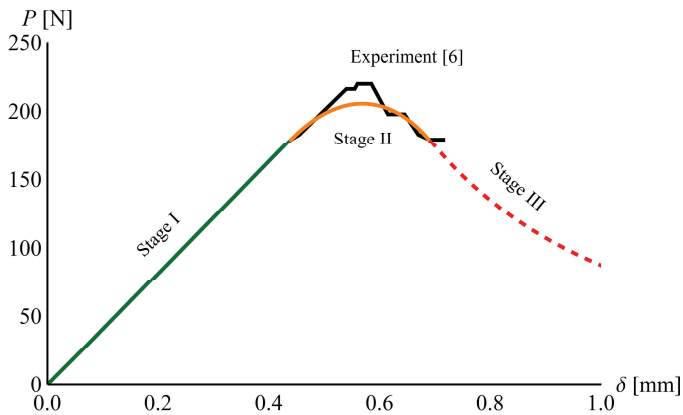

Figure 5: Load vs. applied displacement.

Figure 5 shows the load-displacement curve as predicted by the proposed model, superimposed to the experimental curve furnished by Macedo *et al.* [6]. The three stages of behaviour described in Section 3 are clearly individualised. In stage I, the agreement between the theoretical predictions and experimental results is excellent. This success can be ascribed to the effectiveness of the beam on elastic foundation model, but relies also on the compliance calibration strategy adopted to define the value of the elastic interface constant. In stage II, our model underestimates

somehow the maximum value of the load, although gathering the correct trend of the curve. Due to the shortness of the crack propagation length, the experimental tests did not reach stage III and we have no elements for comparison.

Figure 6 shows the relative displacement at the crack tip, $\Delta w(a_0)$, as a function of the relative displacement, δ, between the load application points.

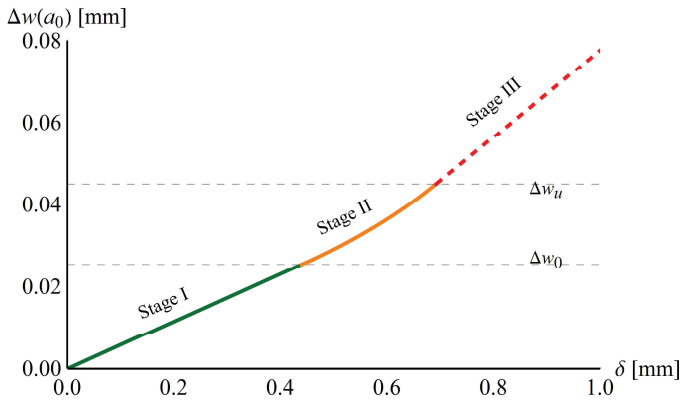

Figure 6: Crack-tip opening displacement vs. applied displacement.

Figure 7 shows the length of the cohesive zone, c, as a function of the delamination length, a, through the three stages of response. During stage I, the delamination length is a_0 and the cohesive zone has a null length. During stage II, the cohesive zone length increases, while the delamination length remains constant. Lastly, during stage III, the delamination length increases until the delamination involves the whole specimen, while the cohesive zone progressively reduces its length.

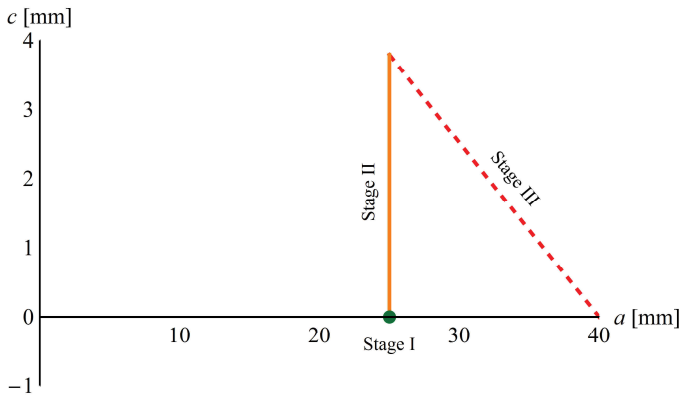

Figure 7: Cohesive zone length vs. delamination length.

Figure 8 shows the normal interfacial stress, σ, as a function of the abscissa, x, along the specimen for increasing values of applied displacement, δ. The green curve corresponds to stage I, the two orange curves to stage II, and the two red curves to stage III.

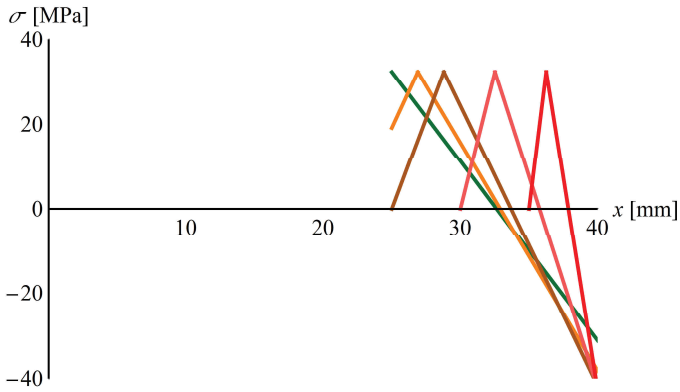

Figure 8: Normal interfacial stress vs. abscissa.

5 CONCLUSIONS

We have presented a mechanical model of the mixed bending-tension (MBT) test, where the specimen is modelled as an assemblage of two beams connected by an elastic interface. The metal beams that transfer the load to the specimen are instead modelled as rigid beams. An analytical solution has been obtained by applying classical beam theory.

To overcome the limits of the elastic interface model, we have developed also a cohesive zone model, which turns out to be effective in reproducing some experimental results of the literature, although it admits room for further improvements. For instance, a better agreement with experimental results could be obtained by adopting a bilinear cohesive law with a discontinuity in the value of the stress transmitted by the damaged interface [12]. Anyway, the proposed model can be used as a simple tool for the understanding of test results, skipping the need to resort to more or less complex numerical analyses.

References

[1] Carlsson, L.A., Adams, D.F. and Pipes, R.B., *Experimental characterization of advanced composite materials – 4th edition*, CRC Press, Boca Raton, FL (2014).

[2] Brunner, A.J., Blackman, B.R.K. and Davies, P., "A status report on delamination resistance testing of polymer–matrix composites", *Eng. Fract. Mech.*, **75**, 2779-2794 (2008).

[3] Andersons, J. and König, M., "Dependence of fracture toughness of composite laminates on interface ply orientations and delamination growth direction", *Compos. Sci. Technol.*, **64**, 2139-2152 (2004).

[4] *ISO 15024:2001, Determination of mode I interlaminar fracture toughness, GIc, for unidirectionally reinforced materials*, International Organization for Standardization, Geneva (2001).

[5] Reeder, J.R., Demarco, K. and Whitley, K.S., "The use of doubler reinforcement in delamination toughness testing", *Composites Part A*, **35**, 1337-1344 (2004).

[6] Macedo, F.S., Pereira, A.B. and de Morais, A.B., "Mixed Bending-Tension (MBT) test for mode I interlaminar and intralaminar fracture", *Compos. Sci. Technol.*, **72**, 1049-1055 (2012).

[7] Bennati, S., Colleluori, M., Corigliano, D. and Valvo, P.S., "An enhanced beam-theory model of the asymmetric double cantilever beam (ADCB) test for composite laminates", *Compos. Sci. Technol.*, **69**, 1735-1745 (2009).

[8] Bennati, S., Fisicaro, P. and Valvo, P.S., "An enhanced beam-theory model of the mixed-

mode bending (MMB) test – Part I: literature review and mechanical model", *Meccanica*, **48**, 443-462 (2013).

[9] Irwin, G.R. and Kies, J.A., "Critical energy release rate analysis of fracture strength", *Weld. J. Res. Suppl.*, **33**, 193-198 (1954).

[10] Yang, Q. and Cox, B., "Cohesive models for damage evolution in laminated composites", *Int. J. Fract.*, **133**, 107-137 (2005).

[11] Bennati, S. and Valvo, P.S., "An experimental compliance calibration strategy for mixed-mode bending tests", *Proc. Mater. Sci.*, **3**, 1988-1993 (2014).

[12] Valvo, P.S., Sørensen, B.F. and Toftegaard, H.L., "Modelling the double cantilever beam test with bending moments by using bilinear discontinuous cohesive laws", in *Proc. 20th International Conference on Composite Materials – ICCM 20*, Copenhagen, Denmark, July 19-24, 2015 (2015).