Annual Conference of Postgraduate Studies and Scientific Research (Basic and Engineering Studies Board)
17-20 February 2012, Friendship Hall, Khartoum

Modelling and Control Analysis of Dividing Wall Distillation Columns (DWC)

Isra Osman Mohammed Koko and Taj Alasfia Mubarak Barakat

Department of Chemical Engineering, Faculty of Engineering, University of Khartoum

Abstract: This work aims to study the behavior of fluid mixtures in the dividing wall column, particularly from a controllability point of view. It covers the aspects of design, modeling, and control. A ternary mixture of benzene, toluene, and o-xylene (BTX) is selected as a case study. A controllability analysis for determining and screening the candidate control combinations of the manipulated variables is carried out with the aid of a linearized model using the concept of relative gain array (RGA). The manipulated variables are the reflux (L), the distillate (D), the side stream (S), the bottom (B) and the boilup (V). Based on RGA criterion, two of the candidate combinations are selected to control the column due to the low interaction between control loops. These combinations are DV/SLB and LB/DVS. In each combination the manipulated variables are used to control the top level, the bottom level, the top composition, the middle composition and the bottom composition respectively. Finally the performance of these two combinations is examined and found to be successful in resisting the disturbances.

Keywords: *dividing wall column; modelling; non-linear model; linear model; control.*

1.INTRODUCTION

The dividing wall column is a new application of the concept of (process intensification) which implies integrating several unit operations into one common apparatus. This configuration decreases significantly the capital cost and the operating cost of the process due to equipment reduction and lower energy requirements compared to conventional distillation sequences. Consequently, it has the potential to be an alternative for the conventional columns sequences used to separate multi-components mixtures.

2. Dividing wall column (DWC)

The dividing wall column is a distillation column for multi-component separation that has a vertical partition wall in the central section (figure 1.ii). The feed side of two compartments acts as the prefractionator and the product side as the main column.

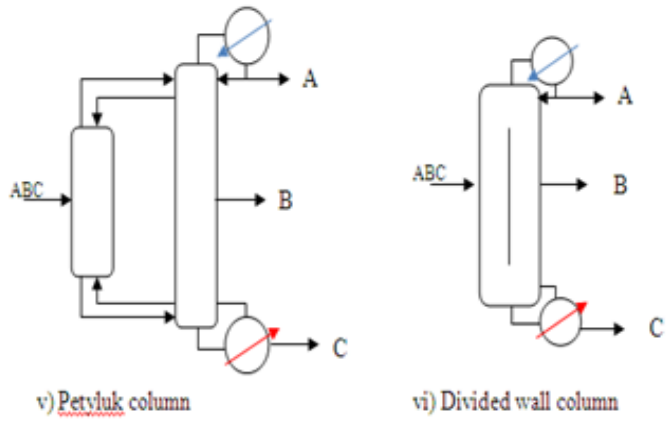

Figure (1). Distillation arrangement for multi component separation

The column may contain either trays or packing. The dividing wall column (DWC) allows substantial

energy savings up to 30-50% and reduction in capital cost up to up to 30%, while separating in a single body a multi-component mixture into pure products.
The DWC belongs to thermally coupled distillation columns which include the Petyluk column (figure 1.i) that was initially introduced by Brugma in 1942. The petyluk column was named after Petyluk who studied theoretically this configuration in 1965. What is called now the dividing wall column (DWC) is a similar structure to Petyluk proposed by Wright in 1945 and introduced to the industry world in 1987 by Kaibel. The DWC and Petyluk column are believed to be thermodynamically equivalent.
These two full thermally-coupled structures subjected to studies concerning different aspects such as design [4], Controllability and degrees of freedom [5] [6]

5. Separation in DWC

For a three component mixture (A the lightest, B the intermediate and C the heaviest), the prefractionator separates the lightest component (A) from the heaviest component (C), while the middle component (B) is distributed. The main column separates (A) from (B) in trays above the middle stream product, and (B) from (C) in trays below the middle stream product. The main column has the three product streams and supplies the reflux and vapor streams required by the prefractionator, resulting in a double thermal coupling between both parts.
The idea of the Petlyuk Column and the DWC can be extended to arrangements for the separation of multi-component mixtures with more than three components with only one condenser and one reboiler,

6. Case study

1- A ternary mixture of, toluene, and o-xylene (BTX) is to be separated in a DWC. All the behavior of the column is studied through carrying out the following: Short cut design
2- Non-linear and Linear models simulation
3- RGA analysis

Assessing selected control configurations through introducing disturbance

Table (1). Case study data

Feed properties			
Feed flow rate F = 1 kmol/min, Feed state, q_F = 1			
	Benzene	Toluene	Xylene
Normal boiling point, K	T_A = 353	T_B = 385	T_C = 419
Relative volatilities	α_{AC} = 7.1	α_{BC} = 2.2	α_{CC} = 1
Feed composition	z_A= 0.3	z_B = 0.3	z_C = 0.4
Products specifications			
specifications	Flow rate kmol/min	Purity	
Distillate	0.333	Benzene x_A = 98%	
Side stream	0.333	Toluene x_B = 98%	
Bottom	0.334	Xylene x_C = 98%	

7. The DWC design

In the literature [4], a model of three conventional columns in series was presented to study the design of the DWC as shown in figure 2.

Fenske-Underwood-Gilliland equations are used for the design of the series of the three columns

Table (2). Specification needed for designing the shortcut model.

The column	Specifications
Column 1	Recoveries of A and C (arbitrarily chosen, 0<recovery<1)
Column 2	Distillate and bottom purities
Column 3	Distillate and bottom purities

The estimated DWC parameters to achieve the desired separation of the BTX mixture are given in details in table 3

Table (3). DWC design parameters and internal flows

Structure parameters
Total number of trays = 38
The prefractionator
No. of trays in the Prefractionator = 13 Feed tray → tray 6
The main column
No. of trays in the main column = 25 Reboiler → tray1 First common try below wall → tray 10 Side stream tray → 16 First common try above wall → tray 22 Condenser → tray 25
Internal flowrates
Reflux L = 2.7799 kmol/min Boilup V = 3.1129 Liquide split = 0.33 Vapour split = 0.32

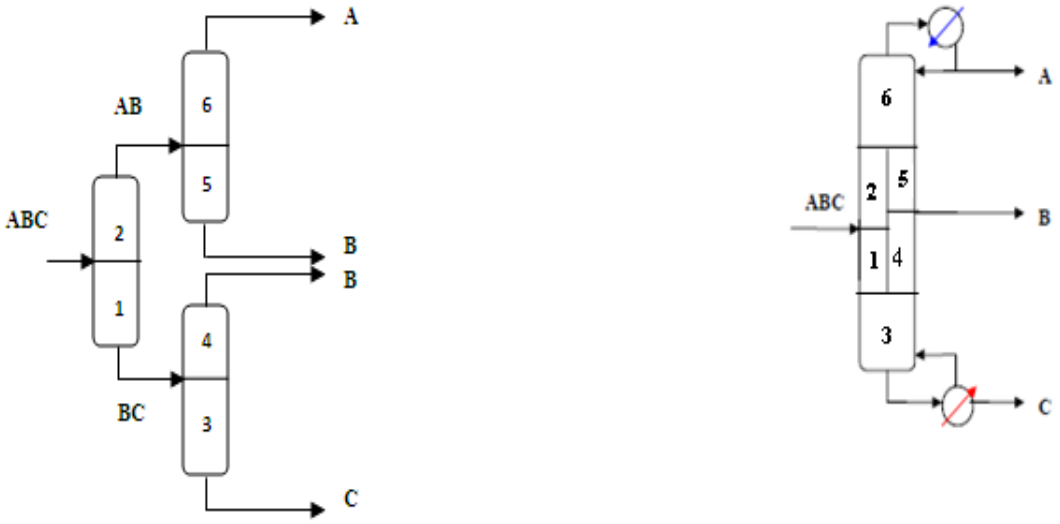

Figure (2). Equivalent shortcut model to DWC

8. Dynamic model for DWC

According to the process behavior, there are two types of dynamic models: linear and non-linear. Linear models allow the easy manipulation of transfer functions which are the principal tools in studying dynamic control. However, non-linear models can be linearized by means of several methods

.8.1 Non-linear dynamic model

Simplified stage-by-stage material and energy balances are applied to the column trays to create the non-linear.

The dynamic non-linear model can be represented by the following compressed formula of an ordinary differential equations system [8]:

$$\mathbf{x}' = f(\mathbf{x}, u, d, t) \ldots\ldots\ldots (1)$$

$$\mathbf{Y} = g(\mathbf{x}, u) \ldots\ldots\ldots\ldots (2)$$

Where

x = the states vector consisting of compositions and liquid holdups,

u=[L S V D B R_L R_V] is the input vector,

d = [F z q_F] is the disturbance vector,

$\mathbf{Y}$ = [x_A x_B x_C M_T M_R] is the output vector (selected states),

The Livermore Solver for Ordinary Differential Equations (lsode), a built-in-function in Octave, is used to solve the system assuming that all initial compositions inside the column are equal to those of the feed.

The results obtained through the non-linear simulation of the proposed structure are very close to the desired specifications (table 2). The calculated products compositions are: [x_A x_B x_C]=[0.987 0.975 0.989]. Figure 4 shows the profiles of temperature and compositions inside the prefractionator and the main column at steady state (time $\rightarrow \infty$).

8.2 Linear dynamic model

Using Taylor expansion and keeping only the first order terms, the equivalent linear representation for the DWC non-linear dynamic model described by equations (1) and (2) is[17]:

$$\mathbf{x}' - \mathbf{x}'_0 = A(\mathbf{x} - \mathbf{x}_0) + B(u - u_0) \ldots\ldots (3)$$
$$\mathbf{Y} - \mathbf{Y}_0 = C(\mathbf{x} - \mathbf{x}_0) + D(u - u_0) \ldots\ldots (4)$$

Where $(\mathbf{x}_o, u_0)$ is the steady state.

Laplace transformation of the linear model described by equations (3) and (4) gives the corresponding representation in s domain

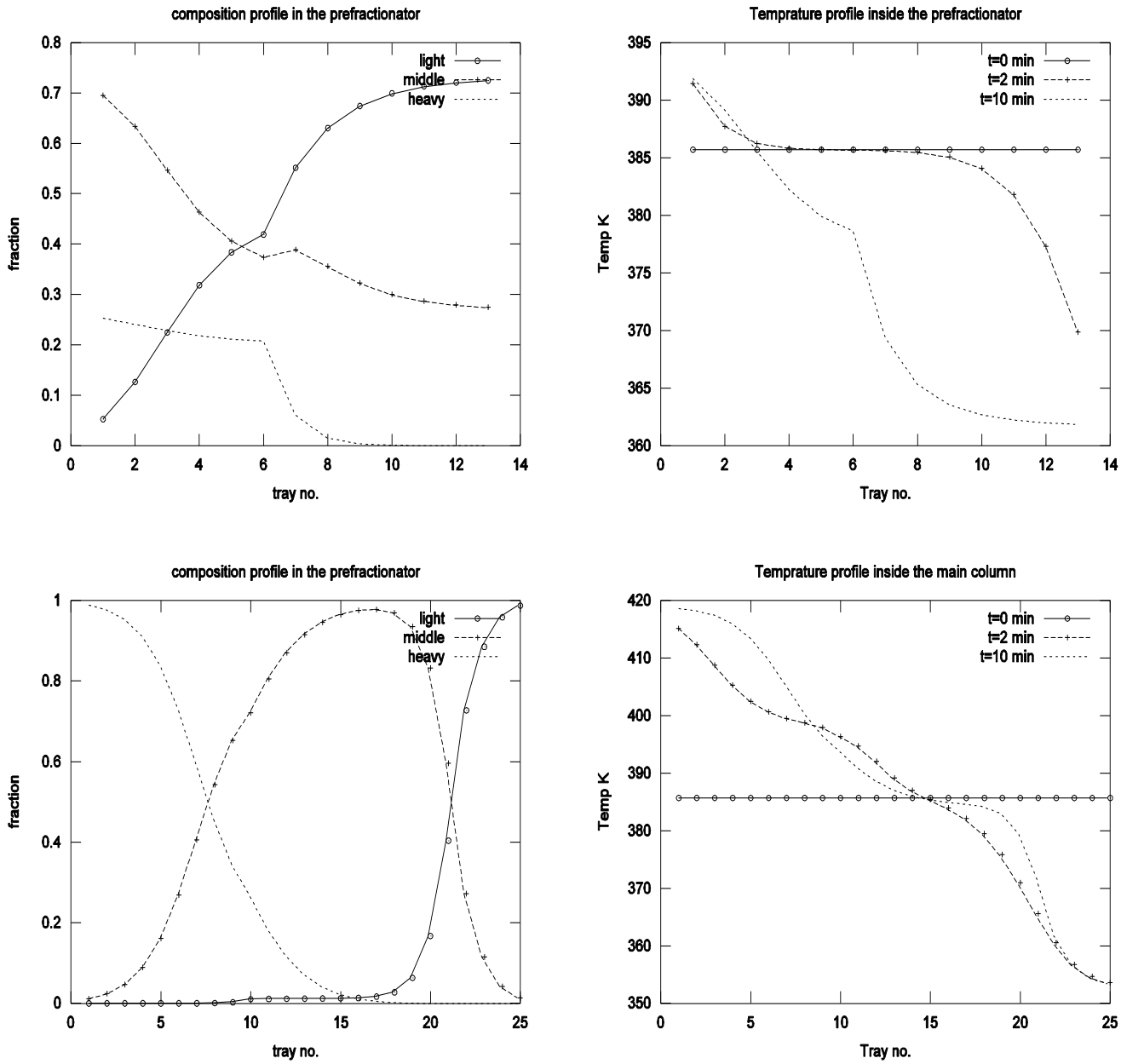

Figure (4). Steady state composition profile (left) and temperature profile (right) inside the prefractionator and the main column

$$X = G(s)\, U_{\bullet} \ldots\ldots\ldots\ldots (5)$$

$$Y = C(sI - A)^{-1} B_{\bullet} + D_{\bullet} U_{\bullet} \ldots\ldots\ldots (6)$$

Noting that[4]:

$$G(s) = (sI - A)^{-1} B_{\bullet} \ldots\ldots\ldots (7)$$

Where $G(s)$ is the transfer function matrix, I is the unity matrix, $A, B_{\bullet}, C$ and $D_{\bullet}$ are the coefficients matrices.

Figure 5 compares the results of the two models. At the beginning the profiles produced by the two models diverges but this deviation occurs within the first 5 minutes then starts to vanish and the profiles almost coincide at steady state, the state around which the model is linearized and will be further analyzed. Due to the short period of deviation the linear model can be considered as a reasonable approximation for the non-linear model.

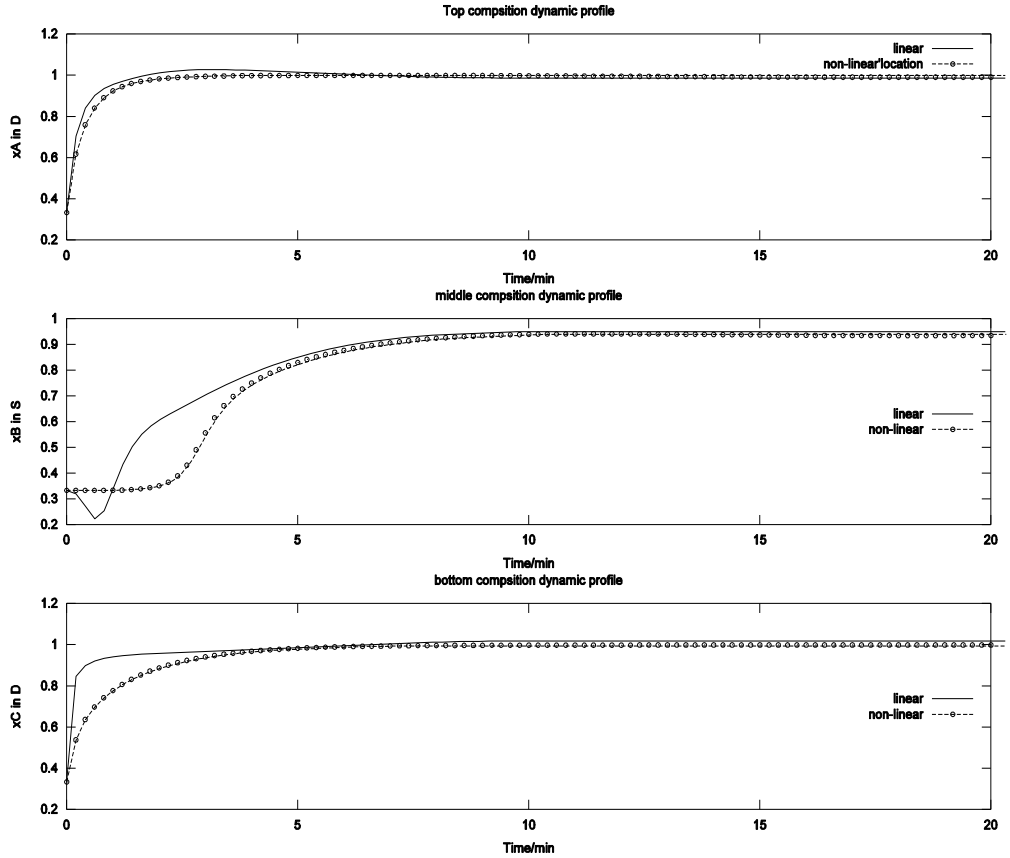

Figure (5). Composition dynamic profile

9. Controllability analysis of DWC column

The relative gain array (RGA) method is used to select the most feasible pairs of input output variables (i.e. manipulated/controlled variables) [19] [20].

RGA of a system with a transfer function matrix ***G(s)*** is calculated as follows:

$$RGA(G(s))|_{s\to 0} = (G(s).\times (G(s)^{-1})')|_{s\to 0} \ldots\ldots\ldots (8)$$

According to the model described, given the feed properties (flow rate, quality and composition), the DWC has seven operation DOF corresponding to seven candidate manipulated variables in the process [8].

These are: [L V S D B Rl Rv]
The variables to be controlled are: [x_A x_B x_C MT MR]

Accordingly only five manipulated variables will be selected. When investigating the variation of the two splits Rl and Rv they are excluded because of their weak effect on the nearby composition and to avoid their similar simultaneous effect on the middle composition that might lead the loops to interact significantly.

The proposed control configurations are DB/[L S V], DV/[D S V] , LB/[L S B] and LV/[D S B]. In each combination the manipulated variables are used to control the top level, the bottom level, the top composition x_A, the middle composition x_B and the bottom composition x_C respectively.

The values of the RGA are included to table 4 below. According to the RGA criterion that recommend to associate the controlled and the manipulated variables so that the corresponding relative gains are positive and close to one, the values in table 6 show that LB/DSV (scheme 2) and DV/LSB (scheme 3) can be considered as the best choices due to the lower interaction between the separate control loops. Whereas, it is obvious that DB/LSV configuration seems to be the worst.
Moreover, some sort of cross pairing between variables is suggested; that is to manipulate x_A with S and x_B with D in LB/DSV configuration and pairing x_B with B and x_C with S in DV/LSB configuration.

Table (4). RGA for different control schemes

No	scheme	Controlled variables	Manipulated variables		
			L	***S***	***V***
1	*DB/LSV*	x_A	58.75	−0.004	−57.74
		x_B	−21.32	0.341	21.97
		x_C	−36.43	0.663	36.76
			D	***S***	***V***
3	*LB/DSV*	x_A	0.650	−0.004	0.353
		x_B	0.132	0.341	0.526
		x_C	0.217	0.662	0.120
			L	***S***	***B***
2	*DV/LSB*	x_A	0.357	0.419	0.223
		x_B	0.523	0.534	−0.057
		x_C	0.119	0.046	0.834
			D	***S***	***B***
4	*LV/DSB*	x_A	−59442744.44	38963274.64	20479470.79
		x_B	48756414.73	−69245176.19	20488762.45
		x_C	10686330.70	30281902.54	−40968232.25

10.5 Control configurations assessment

The closed-loop response of the DWC for the two control configurations LB/DVS and DV/SLB, after cross pairing the variables, is analyzed through exerting disturbances of +10% in the feed flow rate (F) and -10% in the feed quality (q_F). The responses are plotted in figure 6 and figure 7 respectively.

Proportional (P) controllers are used to control liquid level in the reboiler and the condenser since they are capable to absorb fluctuations of liquid levels in the large tanks of the reboiler and the condenser [4]. Whereas, the tighter proportional-integral (PI) controllers are used to control compositions [21].
The reaction curve tuning method (Cohen-Coon method) is used to determine the first estimates of the controller parameters then these values will be refined and readjusted until the desired performance and stability is obtained [22].
Examining the responses it can be seen that both schemes succeed in resisting the disturbances introduced.

Table 5 includes settling time and maximum offset for both schemes. Settling time is determined to be the longest time at which max (||[xA xB xC]- [xA0 xB0 xC0]||)=10^-7.
When introducing a disturbance to the feed flow rate the LB/ DVS scheme shows better performance as it needs less time to restore the system to the original state, actually it is 1.3 times faster.

Table (5). Settling time and maximum offset for LB/DVS and DV/ LSB schemes

Scheme	10% feed disturbance				10%composition disturbance			
	Settling time, min	Max. offset %			Settling time, min	Max. offset %		
		x_A	x_B	x_C		x_A	x_B	x_C
LB/DVS	511	0.158	0.626	0.469	470	2.8e-3	8e-3	1.7e-3
DV/ LSB	661	0.425	0.476	0.219	602	2.5e-3	7.4e-3	6.5e-4

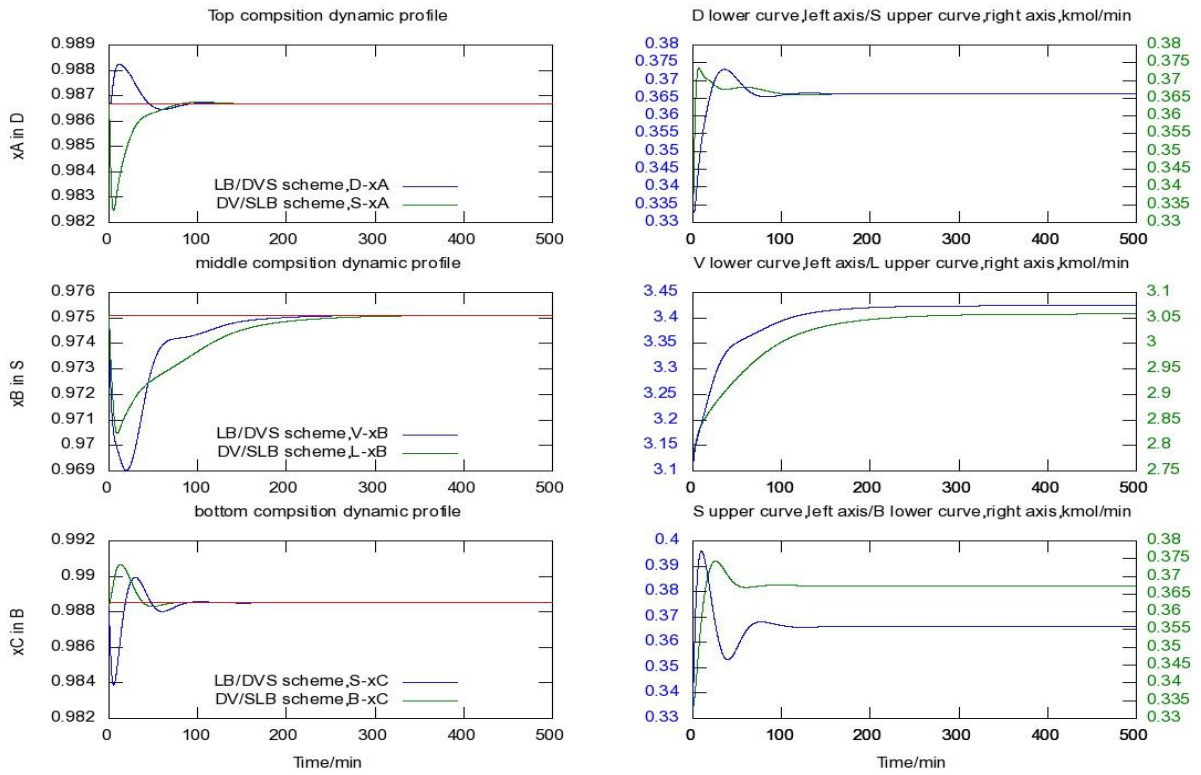

Figure (6). Dynamic response of the products composition (left) and the manipulating flows rate (right) to 10% feed flow rate disturbance.

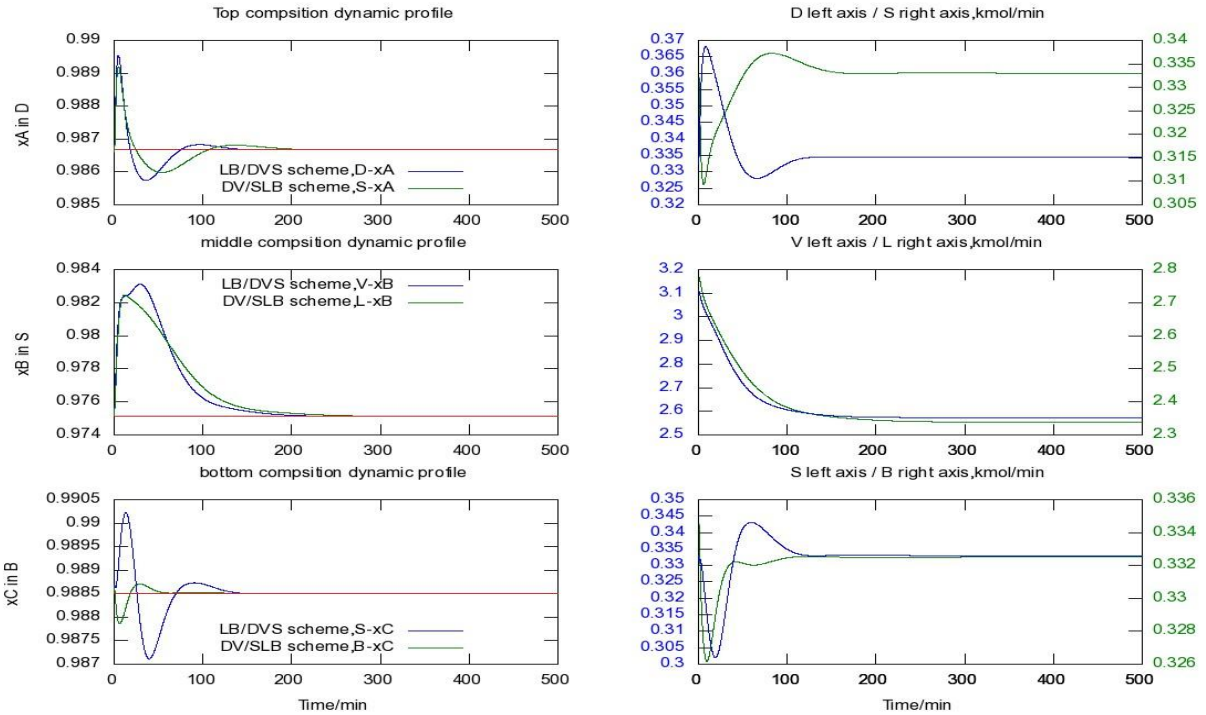

Figure (7). Dynamic response of the products composition (left) and the manipulating flows rate (right) to -10% feed quality q_F

11. Conclusions

The dividing wall column is a fruit of searching energy-efficient systems in distillation process.
Focusing on control, the DWC design and modeling are also studied in this work by means of the traditional methods used to study the conventional columns.
The well-known Fenske-Underwood-Gilliland equations applied to a series of three conventional columns representing the DWC give proper estimations of the DWC structure and internal flow rates.
A non-linear model simulating the DWC depending on simplified assumptions is created in Octave. However, this model gives a general comprehension of the DWC behavior. In addition, using conservation laws of mass and energy, a stage by stage model does not seem to converge. Alternatively, the DWC is divided into two linked columns that have been separately modeled.
The non-linear model undergoes a linearization process to produce the linear model which is an essential requirement for performing the controllability analysis. Comparing the data calculated through the linear model to those resulted from the non-linear one shows that linear model can be a reasonable approximation.
To analyze the DWC controllability and to determine the best control configuration the relative gain array RGA concept is used. According to this concept, the two configurations DV/ LSB and LB /DSV show signs of superior performance.
Cohen-Coon tuning method (reaction curve method) gives reasonable initial guesses for the parameters of the PI controllers controlling the top level, the bottom level, the top composition, the middle composition and the bottom composition.
Introducing 10 % disturbance in feed flow rate and feed quality both control schemes are capable to absorb the disturbances effect. However, DV/ LSB scheme shows better performance when introducing the feed flow rate disturbance, which has more significant effect compared to that of composition, as it is 1.3 times faster to return the system to the steady state.
The study confirms that the traditional methods used in the design and the control of conventional distillation columns work well and give reasonable results when applied to the DWC.

These conclusions, combined with the potential benefits of capital and operating costs reduction, make of the DWC a promising arrangement for multi-component separation.

Nomenclature

$\boldsymbol{A}$ coefficient matrix of linear model
B bottom stream
$\boldsymbol{B}$ coefficient matrix of linear model
$\boldsymbol{B}_{\bullet}$ modified coefficient matrix
C number of components
$\boldsymbol{C}$ coefficient matrix of linear model
D distillate of the dividing wall column
$\boldsymbol{D}$ coefficient matrix of linear model
$\boldsymbol{D}_{\bullet}$ modified coefficient matrix
d disturbances vector
F feed flow rate
$\boldsymbol{G}$ transfer function
$\boldsymbol{I}$ unit matrix
Im imaginary part of a complex number
i component *i*
j tray *j*
L reflux in the dividing wall column
l_j liquid flow rate leaving tray *j*
$\boldsymbol{M}$ holdup
M_R reboiler holdup
M_T condenser holdup
q_F feed quality
Re real part of a complex number
R_L liquid split ratio
R_V vapour split ratio
S side stream
s Laplace domain variable
T toluene
t time
$\boldsymbol{U}_{\bullet}$ modified input and disturbance vector
u input vector in time domain
$\mathcal{U}_{\bullet}$ input and disturbance vector in time domain
u_0 input vector at steady state
V boilup in the dividing wall column
v_j vapour flow rate leaving tray *j*
$\boldsymbol{X}$ the states vector in Laplace domain
X xylene
x the states vector in time domain
x_A benzene concentration in top product
x_B toluene concentration in top product
x_C xylene concentration in top product
x liquid fraction for a component
$\mathbf{x}_0$ steady-state value of states vector
$\mathbf{x}'$ vector containing the states time derivative

$\mathbf{x}'_0$ vector containing the steady-state value of the states time derivative
Y output vector in Laplace domain
$\mathbf{Y}$ output vector in time domain
y vapour fraction
z feed fraction

Greek letters
α_i relative volatility of component *i*
λ_{ij} relative gain between the *i*th manipulated variable and the *j*th controlled variable

REFERENCES

[1] Halvorsen, IJ, Skogestad, S 1999, 'Optimal operation of Petlyuk distillation: steady-state behavior', Journal of Process Control, vol. 9, pp. 407-424
[2] Abad-Zarate, EF, Segovia-Hernandez, JG, Hernandez, S, Uribe-Ramirez, AR 2006, 'A short note on steady state behaviour of a petlyuk distillation column by using a non-equilibrium stage model', The Canadian Journal of Chemical Engineering, vol. 84, pp. 381-385.
[3] Olujic, Z, Frey, G, Jansen, H, Kaibel, H, Rietfort, T, Zich, E n.d., Distillation column internals related process intensification developments, reviewed 29 April 2010, <http://kolmetz.com/pdf/olujic.pdf>.
[4] Serra, MP 2000, 'Energy optimisation and controllability in complex distillation columns',Universitat politécnica de Catalunya, Spain, < http://www.tdx.cat/TDX-0204108-094245>.
[5] Wolff, EA & Skogestad, S 1995, 'Operation of Integrated Three Product (Petlyuk) Distillation Columns', Ind. Eng. Chem. Res., vol. 34, pp 2094-2103.
[6] Abdul Mutalib, MI & Smith E 1998, 'Opration and control of dividing wall distillation Columns', Trans IChemE, Part A, vol.76, part A, pp. 308-318
[7] Hernandez, S, Sandoval-Vergara R, Barroso-Munoz, FO, Murrieta-Duenas, R , Hernandez Escoto, H, Segovia-Hernandez, JG, Rico-Ramirez, V 2009,' Reactive dividing wall distillationcolumns: Simulation and implementation in a pilot plant ',Chemical Engineering and Processing. vol. 48, pp 250-258.
[8] van Diggelen, RC, Kiss, AA, Heemink, AW 2010, 'Comparison Of Control Strategies for Dividing-Wall Column's, 'Ind. Eng. Chem. Res., vol. 49, pp 288-307.
[9] Ling, H, Lyuben, WL 2010, 'Temperature Control of the BTX Divided-Wall Column', Ind. Eng. Chem. Res., vol. 49, no. 1, pp. 189–203
[10] Emtir, M 2002, 'Economic and controllability analysis of Energy-integrated distillation column', Ph.D. thesis, Budapest University of technology and economics, Budapest.
[11] Christiansen, AC, Skogestad, S, Lien, K 1997, 'Complex Distillation Arrangements: Extending the Petlyuk Ideas', paper presented to PSE-ESCAPE-97, Trondheim, 26-29
[12] Penderfas, JG, Vickery, D, Au-Yeung, P & Anderson, J 2008, Consider dividing wall column, viewd 10 may 2010, http://www.chemicalprocessing.com/articles/ 2008/245/.html
[13] Rangaiah, GP, Ooi, EL & Premkumar, R 2009, 'A Simplified Procedure for Quick Design of Dividing-Wall Columns for Industrial Applications', Chemical Product and Process Modeling, vol. 4 , no. 1, Art. 7.
[14] Lee, S, Shamsuzzoha, M, Lee, M 2007, 'Structural Design and Separation Characteristic of Divided Wall Column by the Shortcut Method', paper presented to AIChE Annual meeting
[15] Skogestad, S 2010, Matlab distillation column model ("column A"), reviewed 10 may 2010, <http://www.nt.ntnu.no./users/skoge/book/matlab_m/cola/cola.html>.
[16] Kreyszig, E 1999, Advanced engineering mathematics, 8th edition, Jon Wiley &Sons, Singapore.
[17] Skogestad, S 1997, 'Dynamics and Control of Distillation Columns: A Tutorial Introduction', Trans IChemE, vol. 75, Part A, pp 539-562.
[18] Storkaas, E & Skogestad, S 2002,'Effect of Input Rate Limitation on Controllability', paper presented by Federico Zenith at AIChE Annual Meeting, Austin, 7th June.

[19] Stephanopolous, G 1984,Chemical process control, Prentice-Hall
[20] Perry, RH & Green, DW 1997,'process control',in Zoe Foundotos & Robert Esosito(eds), Perry's Chemical Engineers' Hand Book, 7th edition, McGraw Hill, Australia, pp. 8-22:8-24.
[21] Segovia-Hernandez, JG, Hernandez, S, Femat, R and Jimenize, A 2003, Dynamic control of a petyluk column via proportional- integral action with dynamic estimation of uncertisest, a paper represented in European symposium on computer aided process engineering-13, Elsevier.
[22] Abu-Goukh, ME 1994, Process dynamics and control, Khartoum House, Khartoum.
[23] Wankat, PC 1988, Separation in chemical engineering: equilibrium Staged Separation, Prentice-Hall, New Jersey.
[24] Hsu, T, Yu, C 1990, 'journal OF The Chin. I. Ch. E', Composition control of high-purity distillation columns, vol. 21, pp. 105-114.
[25] Skogestad, S, Morari, M 1988, 'Columns. Ind. Eng. Chem. Res', Understanding the Dynamic Behaviour of Distillation, vol. 27, no. 10, pp. 1848-1862.
[26] Skogestad, S 1992, 'Dynamics and Control of Distillation Columns – a critical survey', paper presented to IFAC-symposium DYCORD+' 92, Maryland, 27-29 April.
[27] Eaton, JW, Bateman, D, Hauberg, S 2007, GNU Octave, 3rd edition, Free software foundation, Boston.