The ‘pragmatics’ of material interaction

Published in the Journal of Consumer Culture, 2007, Vol. 8(1): 11-33. Please cite published version and contact the author for help with pagination.

Tim Dant

Department of Sociology

Bowland North

Lancaster University

Lancaster, LA1 4YT

t.dant@lancaster.ac.uk

01524 593184

The ‘pragmatics’ of material interaction

Abstract

Our everyday interactions with material objects are dependent on us making sense of what they mean and what actions will be effective in transforming them to suit our purposes. We perceive things by interpreting the information of our senses in the light of what we know of our material culture. We act on them through bodily gesture that changes them, both physically and their meaning as signs. Those who design and manufacture objects anticipate how they will be interacted with and how they will fit within the existing material culture. Their intentions are embedded or within the form of the objects they produce and are responded to or ‘read’ during interaction by consumers or users. Material interaction involves pragmatic relations that situate the meaning of objects in relation to other objects and the intentions of the designer and the user. This paper attempts to set out the pragmatic features of everyday interaction with objects to enhance sociological understanding of design and consumption and illustrates the processes of material interaction with the examples of making flat-pack furniture and professional work on cars. The concept of ‘pragmatics’ is derived from the writings of Pierce and Morris and their approach to the study of signs is developed with reference to Barthes. Meaningful material interaction involves the subject/object, person/thing relations of perception and gesture and these are developed from the theories of Merleau-Ponty and Leroi-Gourhan. The pragmatic dimensions of material interaction are proposed to be: intention, perception, orientation, manipulation and continuation.

Introduction

The process both of designing and consuming 'stuff' – material objects – presupposes material interaction. To design an object is to build into it characteristics of form and function that will be responded to by the consumer through material interaction. Designing involves a set of practices – imagining, drawing, discussing, mocking-up, prototyping, playing with – that prefigure material interaction with the final product. Design is directed towards the material interaction that the consumer will engage in, so we can imagine the consumer interacting with the object more or less as the designer intended while recognising that this does not always work out. Commodity design is of course a 'mass medium' because the communication is one-to-many by dint of the design being applied to standardised products from a production line, although the individual consumer's interaction with the object is particular and singular. This connection between designer and consumer could be construed as a one-to-one communication process between them as individuals in which the object acts as an intermediary or vehicle but in fact the process is cultural and shared.

On the floor were two cardboard boxes, three foot by two foot by three inches. The invoice said it was a chest of drawers… and indeed a chest of drawers had been ordered some weeks before from a picture in a catalogue. A chest of drawers is a box with other boxes slotted into it, handles for grasping and pulling, that you can put stuff in. But what was in the cardboard boxes just wasn't big enough for that. Although it didn't make sense as a 'chest of drawers' the cardboard boxes had obvious openings where flaps were held down by tape and cutting through the tape would allow Rachel to get at whatever was inside. And inside there were some familiar bits; what looked like drawer-fronts with holes for knobs. But then there were series of identical pieces with slots and holes and a couple of bags of bits. Some things were odd; long straight pieces, one curved spar and sheets of hardboard – were they part of the packing?

The building of flat-pack furniture will provide one running example for this paper that will explore what is involved in material interaction.[1] Many people have had a go at making up flat-pack furniture, but even those who haven't will be familiar with the 'construction kit' idea and will have had at least some of the experience of unwrapping a new object and finding out how to fit it into their ordinary lives… and perhaps even reading the instructions. The second running example is of a professional technician working on a car to replace a timing belt. Like the flat-pack furniture builder he is engaging in material interaction and the way he does it has many similarities.[2]

Roger has changed many timing belts on many different types of car… but not on this particular model. And he knows that because it has twin overhead cam shafts, when the old belt comes off, the valve springs will move the cam shafts out of alignment with each other. There is a special tool that could hold the sprockets on the end of the shafts in alignment. But his garage doesn't have one that will fit this car and when he asks the boss, he's told to go ahead without one. Uncertain of how he is going to complete it, he proceeds with the job carefully, step by step, removing components from the top of the engine and from underneath so that he can get at the belt. Before he can get access to the encased timing belt, one of the components he will remove is the water pump drivebelt on the outside of the casing.

In both these situations the 'consumer'[3] engages in material interaction with objects that have been designed to be interacted with in a particular way. The 'designer'[4] (of the chest of drawers, of the engine) has anticipated that this sort of interaction will be necessary and the objects are made to respond in predictable ways. There is then human intentionality embedded within the objects that is released as the user interacts with them. This paper will explore the parameters of the process of material interaction as it is undertaken by the consumer when they take up material objects for use. In expanding on the idea of material interaction – the lived relations between human beings and material objects – I will argue that the process is meaningful, that the meaning of objects is understood by consumers through 'reading' them as a set of signs that are understood through the culture and that the relation is pragmatic in that the meaningfulness of objects unfolds through interaction. I will shortly return to why the notion of 'pragmatics' might be useful to understand how material interaction proceeds and then begin to think through some of what is involved in building the chest of drawers and changing the timing belt.

Human interaction with things

There is a body of work that addresses human interaction with artefacts that primarily emerges from trying to understand and design electronic, informational systems. Much of this academic research is concerned with 'human-computer interaction' (HCI) or the related field of 'computer supported cooperative work' (CSCW) and language is often central to analysis, either because it accompanies interaction with objects or because it provides accounts of how things are used. Those such as Suchman and her colleagues (1983, 2000, 2002) and the Work, Interaction and Technology Research Group (WIT) at King's College London[5] (see e.g. Heath and Luff 2000; Hindmarsh and Heath 2000; Heath and Knoblauch and Luff 2000) have developed distinctive approaches to the analysis of the process of

working relationships between human beings and things such as photocopiers, prototypes, legal records, medical records, and the equipment found in news production, train control rooms, auction rooms and so on. The methodologies developed in this sort of research begin from traditions (symbolic interactionism, ethnomethodology, conversation analysis) that take the process of language very seriously and see meaning as an unfolding property of language in use rather than simply a semantic property of the words used or even their grammatical constructions. Some researchers, including a number of the studies reported in Luff, Hindmarsh and Heath (2000), also address interactional issues between humans and objects and emphasise the situated character of the way things are made sense of (see also Lave and Wenger, 1991; Chaiklin and Lave 1993). Many of these studies use video data to analyse how people use things and make sense of them and the researchers have begun to move beyond simply taking the accompanying talk as a guide to what is going on; increasingly, glances and movements in relation to things are recognised as important indicators of how things are interacted with (Goodwin, 1994; Hindmarsh and Heath 2003; vom Lehn, Heath and Hindmarsh 2001; Heath and vom Lehm 2004). Recently the power of phenomenology as a resource for understanding how embodied relationships with objects operates has begun to be explored by some HCI researchers (Dourish 2004, Robertson nd.). These developments have begun to explore how human beings interact meaningfully with objects directly, not just in the course of their interactions with other human beings. Larssen, Robertson and Edwards move this research approach on a stage further by recognising that there is a language-like 'dialogue' between the human being and the object that is part of what they call the 'feel dimension' of technology interactions: 'It is a dialogue where movement is the mode of communication' (2006: 330).

Within anthropology Michael Brian Schiffer (1999, 2001) argues that actions incorporating objects can be understood as language-like communicative actions. He argues that animals, including humans, use their life experiences and life history to make inferences about the meaning and significance of objects and materiality and do so by responding to 'traces' attached or associated with the object (1999: 54). Humans use 'correlons' or systems of association (Schiffer 1999: 56) to infer from objects and behaviour the meaning and significance of actions and artefacts (schemas, frames, patterns, classifications, codes, images and so on) that may not be expressible in linguistic form (smells for example have correlons that we react to but find difficult to put into words). Schiffer's theory of objects as 'interactors' that have communicative effect is fascinating and has many parallels with the position that is being developed in this paper; the impact of culture, the non-synchronous communication of meaning via objects, the importance of bodily action. As the philosopher Theodore Schatzki's argues, 'objects … acquire meaning within practices' and contribute to

the constitution of sayings and doings as social practices (1996: 113). From psychology, activity theory has for some time recognised the role of material things in the 'object orientation' (Leont'ev 1979: 48) of human action and this approach has begun to be applied in a variety of social contexts (e.g. Engeström 2007).

In this broad research literature[6] there is much that has informed the analysis of the process of material interaction being developed in this paper and much that deserves more detailed discussion. What is being carried forward is the need to find an analytical approach to the way human beings interact with objects within their culture that recognises that meaning is exchanged, even when there are no other humans being present to talk to and the object is not simply the vehicle for ordinary language. For the study of consumption and design this is important because people communicate with objects in their culture directly, not simply via advertisements, instruction manuals or labels inscribed on their surfaces (such as 'Volume' printed beneath a control on sound equipment). Consumers communicate through sight, touch – and sometimes other senses – using their whole body to both make sense of and to make use of the things around them. This is not achieved through instinctual behaviour or even simple learnt behaviour but through the complex cultural acquisition of the meanings of objects that is characteristic of a particular formation of material civilization (Dant 2006). The communication process between humans and objects is 'pragmatic' in the sense that meaning is contingent on the current situation that continually unfolds in the course of the interaction with the object. It is particularly difficult to get access to because it is so familiar in ordinary life that we seldom notice it unless things go wrong and because the meaning exchanged between a person and a thing is not directly available to an observer. We can often simply impute or conjecture what meanings are understood between person and thing but to do so is presume what is going on without any evidence or subtlety. So I will use my two illustrative examples that through the intermediary of special objects – diagrams – show occasions when what things mean has become a problem. As consumers read diagrams to help them make sense of an array of objects they show that they are also 'reading' the objects themselves and that the meaning they derive from that reading is contingent on the activity being undertaken.

Pragmatics

The term 'pragmatics' was coined by Charles Morris as one of the dimensions of semiosis, the system of exchanging meaning through signs, that he developed in the 1930s. Its meaning is simply put: 'By "pragmatics" is designated the science of the relation of signs to their interpreters' (Morris 1971 [1938]: 43). Morris chose the term to refer to the pragmatic

philosophy of Peirce, James, Dewey and Mead but he was careful to distinguish it from 'pragmatism' by saying that pragmatics dealt with the 'biotic aspects of semiosis, that is, with all the psychological, biological and sociological phenomena which occur in the functioning of signs' (ibid). This seems to leave an enormous field open for pragmatics but it is traditionally distinguished from syntax (the relations of signs to one another) and semantics (the relations of signs to the objects to which they are applicable) as the other dimensions of semiotics (Levinson 1983: 1). The study of pragmatics has become a substantive area within linguistics that overlaps and incorporates a range of other disciplines, including psychology and sociology and which focuses on how non-linguistic features of language use contribute to the communication of meaning. Perhaps the most famous and most striking pragmatic feature of language is the idea of indexical or deictic expressions that depend on the context of utterance for their meaning to be clear; these are occasions when an utterance derives its meaning from some one, some thing or some time or place that are not specified within the utterance but is apparent from the context.[7] Pragmatics has developed as a sub-field in linguistics that has drawn on philosophical ideas about speech act theory and implicature as well as the sociological study of conversation analysis (see e.g. Levinson, 1983; Mey 2001).

But how does pragmatics, which is about the relation of signs to their interpreters, apply to material interaction when there are apparently no signs involved because there is no linguistic exchange? Schiffer might say that the consumer 'infers' that a piece of wood from the flat-pack furniture is a drawer-front from her previous experience of chests of drawers and their drawer-fronts. The object is then a sign for what its cultural meaning is and this is necessary for interacting with it in any meaningful way. Of course young children or chimpanzees lacking the necessary cultural biography probably wouldn't be able to make such meaning out of the objects and would perhaps pick them up and throw them or at best build them into piles.[8] There is support for this way of thinking about signs in the writing of Peirce (1991), the philosopher who inspired Morris to articulate his theory of signs and who is the originator of the idea of indexicality and what he calls 'semiotic'. Peirce famously distinguishes between 'object', 'sign' and 'interpretant' but what is important if somewhat confusing is that 'objects' are not necessarily <u>material</u> objects, in the world, outside the interpreter. Ideas can also be objects that are symbolised as signs which is why his definition of the sign is so elliptical: '*anything which, being determined by an object, determines an interpretation to determination, through it, by the same object*' (Peirce 1991: 251 – italics in original). In contradistinction to the idea of a sign as an 'implement of communication', Peirce argues that in order for a sign to have meaning in communication it must first be recognised as having that meaning: 'if we regard it as an outward object, and as addressing itself to a

human mind, that mind must first apprehend it as an object in itself, and only after that consider it in its significance' (Peirce 1991: 255).

The determination of the object as a sign is tied up with its interpretation which is, at least in part, determined from what the interpreter already knows. Before the consumer can think "that's a drawer-front!" she must know what a 'drawer-front' is and recognise its significance and interpret *this* object as one. Only once the object is interpreted as a sign of a drawer-front is it possible to start searching for the sides and knobs to go with it – even if there is no linguistic utterance with its own signs and indexicality. This paper is concerned with the pragmatics of that initial and direct interpretive engagement with material artefacts that have meaning because designers invested them with it. They created an object that, in turn, makes reference to the material culture of chests of drawers.

The pragmatics of material interaction are concerned with those practices by which human beings derive cultural meaning and value from things. These practices are an expression of the culture and link the individual to their society. They may also be construed as a discontinuous dialogue between designer and consumer.

From semiotic to semiology

Despite Peirce, the way that semiosis is usually understood is as a sort of second order language that operates in codes with different levels of meaning that ultimately have ideological effect. This approach is most closely associated with Barthes's development of 'semiology' as a method of cultural analysis that has its origins in linguistics. He refers to the 'systems' (e.g. the garment, food, car and furniture systems) in which the meaning of different types of objects is derived from codes made up of the syntagmatic relations with other objects in the system (Barthes 1973: 25-9). This is a rather different and apparently restricted notion of the operation of signs compared to Peirce's semiotic and Barthes is careful to distinguish the meaning he wishes to address semiologically from the function of the object; what is important is how the object is read as an appearance. Here he makes this clear in relation to the telephone:

> **… the appearance of a telephone always has a meaning independent of its function: a white telephone always transmits a certain notion of luxury or of femininity; there are bureaucratic telephones, there are old-fashioned telephones which transmit the notion of a certain period (1925); in short, the telephone itself is susceptible of belonging to a system of objects-as-signs… (Barthes 1983: 182)**[9]

This familiar way of understanding semiology is however not all that Barthes had in mind. In the Elements of Semiology (1973), he refers to the car and fashion systems as having a number of sub-systems; the car system is on the one hand to do with the form and

specification of the car as purchased but another mode of its 'speech' is to do with the sociological features of *driving* and the variations in usage of the car (Barthes 1973: 29). The garment system has three modes of speech; clothes as written about, clothes as photographed and finally clothes as worn, in which there are rules about the association of types of clothes and the form that they take up (Barthes 1973: 27). However, when Barthes shortly afterwards turned to study the fashion system (1990) he focussed his attention on clothes as *written*, leaving clothes as photographed to a brief appendix and clothes as worn to be implied. He recognises the use of objects – cars as driven, clothes as worn – as being semiological systems of meaning but he never attempted to engage in any analyses of these modes of speech. If he had, he would have been analyzing what I have referred to as material interaction and his idea of the sign would have been extended to be much more nearly what Peirce had in mind.

Barthes comes closest to exploring the meaning of objects in action when he comments that an object which seems to be purely instrumental and 'effectively serves some purpose… also serves to communicate information; we might sum it up by saying that there is always a meaning which overflows the object's use' (1983: 182). The telephone on his desk functions as a sign of someone who needs to make telephone calls and his use of it is tied up with this meaning; the telephone is a device for making contact with others, it is a nuisance when it rings, it is an expense, it is something that gets dirty and needs cleaning – especially if it is white – and it requires culturally acquired bodily skills to make it function (pressing the right buttons, using menus, volume controls and so on). Children today may be adept at 'texting' with their thumbs but would they understand how to enter numbers on an 'old-fashioned' dial telephone? Although Barthes's own analyses were of the appearances of objects as pure signs that could be discussed outside of the context of use, he recognised that meaning and use were connected.

Perception and Gesture

The pragmatics of material interaction is about the relations of material objects as signs to their interpreters but how are they established? There are accidents with objects and there are unintended consequences of material interactions, but I want to argue in the remainder of this paper that there are two modes of any *intentional* material interaction, perception and gesture, and it is through them and only them that the meaningfulness of such an interaction can be realised.[10] It is of course characteristic of human behaviour with objects that accidents and mistakes are 'recovered' by trying to work out what happened; to give meaning to the situation after the event so that future or continuing interaction can be

organised. Instruction, whether through speech, text or demonstration, can also be used to bring the meanings of objects to someone's attention.

Meaningful material interaction is achieved by a blend of perception – reading the signs of the material world – and gesture – intentional action in and on that material world that changes it and its meaning. I am using the term 'perception' in the sense that Maurice Merleau-Ponty (1962) does and the term 'gesture' in the sense that André Leroi-Gourhan (1993) does.[11] These two authors were writing at about the same time but with very different disciplinary orientations and no systematic reference to each other's work. Merleau-Ponty was a phenomenological philosopher whose interest was in understanding human existence through its lived, embodied, experience. What is perhaps most distinctive about his writing is the idea that perception is linked on the one hand to memory and the operation of mind and on the other to the motor capacity and situation of the body; perception depends on a mix of previous perceptual and cultural experience together with current bodily engagement with its surroundings. As Merleau-Ponty puts it cultural knowledge is 'knowledge that remains latent' so that colours are not simply physical properties of the way light is reflected from certain surfaces but are associated with cultural experiences, 'lived as realities' (1983: 168). Contemporary perceptions are linked to the experiences, habits and routine practices of the body (Merleau-Ponty 1962: 238). Perception and gesture are then routinely blended together as everyday actions are repeated in familiar surroundings in which the 'reading' of the material environment and the 'gestures' to engage with it don't require consciously formed interpretations or intentions to act:

> **My flat is for me, not a set of closely associated images. It remains a familiar domain round about me only as long as I still have 'in my hands' or 'in my legs' the main distances and directions involved, and as long as from my body intentional threads run out towards it.**
>
> **(Merleau-Ponty 1962: 130)**

The relationship between action and knowledge then is not separable for actions that are familiar; perception is not a single act but a 'whole open series of possible experiences' (Merleau-Ponty 1962: 212). In a series of telling metaphors Merleau-Ponty shows how perception and action are tied together by what he calls 'intentional threads'; the body is 'anchored' in space, it has a 'grip' on the material environment and is 'geared' to the objects it works with (1962: 250, 251, 253). As he puts it, 'being is synonymous with being situated' (Merleau-Ponty 1962: 252) and being situated means interacting with a material environment.

In a different take on the relationship between perception and action, the anthropologist and archaeologist André Leroi-Gourhan (1993) in a series of works from the 1940s explored the

evolutionary relationship between human beings and technology from an ethnological perspective. He pointed out that the bodily features that we might recognise as human (opposable thumbs, brain size, bi-polar vision) are shared with other primates but what distinguishes the evolution of humans from apes is the capacity to use both hands simultaneously while standing or even moving on two legs. It is the evolutionary emergence of what he calls the 'anthropomorph' – hands completely free, erect posture, with brain skill freed from the vertebral column (Leroi-Gourhan 1993: 38) – that leads to the capacity of the modern human. In principle the dexterity and precision of gesture available to the human animal is available to the higher apes but the difference 'is one of nervous apparatus alone' (Leroi-Gourhan 1993: 239). It is the particular form of the early humans that enabled the development of brain capacity which then makes available to humans a gestural complexity not shared by any other animal. Leroi-Gourhan (1993) points out that the thing that makes humans a distinctive sort of animal is their non-adaptation. Other animals have bodies that evolved for particular environments, particular ways of feeding and so on but the human animal is 'a tortoise when we are beneath a roof, a crab when we hold out a pair of pliers, a horse when we bestride a mount' (Leroi-Gourhan 1993: 246). Human evolution is exterior to the body; it is in the way we have built tools, machines and information systems of increasing complexity that enable us to engage not only individually but collectively and socially with our material environment. This evolution of a material culture, of things that do things and things that remember things, outside of the human body is of course possible because human behaviour is predominantly cultural rather than instinctive.

Although they approach human being from two different directions, Merleau-Ponty from the phenomenology of perception, Leroi-Gourhan from the ethnology of human gestural capacity, they both see perception and gesture linked together in a way that is both embodied and cultural. When their insights are combined we can see that perception is tied to cultural knowledge and situated embodiedness and gesture flows from intentions that are realised through bodily actions that can be extended by tools. Tools are not only extensions of the body's gestural capacity but are also devices that link the individual to their culture and provide a resource with which to manage perception. Most of the time the two channels of relations with objects – perception and gesture – are contiguous, running seamlessly together often without the need for conscious thought that distinguishes them. Once familiar with the completed chest of drawers someone can approach it, open it, place folded clothes in the drawer, close the draw and turn away in a flow of material interaction with the object that apparently requires no interpretation of it as a set of signs, and no distinction between perception and gesture (which isn't to say that the process lacks intentionality or that the material objects are not read as signs). Similarly Roger will remove a nut in a steady

sequence of perception and gesture that requires no reflection – even though he may change his grip on the spanner as the nut becomes freer and he changes from spanner to fingers (as Ray does in another instance from this data set – see Dant 2005: 111-114).

Now the reason for picking as running examples the consumer struggling with assembling flat-pack furniture and Roger changing a cam-belt without the special tool, is that, unlike much routine and habitual material interaction, both situations required pause for thought so the perceptual and gestural components of the material interaction were separated – perception or 'reading' of objects goes on for a period of time before gestural 'acting on' objects goes ahead. This becomes explicit because in both situations tools are used, not only for gestures that work on the material objects, but also for assistance with reading the objects. A classic form of such perceptual tools are instruction manuals with linguistic information, but in both these examples the 'knowledge' devices used are diagrams – a form of what Peirce calls 'iconic signs'.[12]

After an inspection of various pieces and some exploratory putting together of pieces that looked as if they might fit, Rachel consulted the sequence of nine diagrams that showed how to assemble the chest of drawers. It initially identified all the different components – and some that at first glance had appeared to be the same, turned out, when counted and compared with the images, to be different – and showed in an exploded diagram what their orientation was in the final object. The diagrams showed sets of objects and related them with dotted lines and large arrows that indicated how they would connect. The sequence of diagrams showed a series of steps; 'reading' the diagram enabled 'reading' the various component objects in relation to each other and the gestures needed to make a chest of drawers – see Figure 1.

Prior to consulting the diagram, some objects worked as signs that could be related to each other (drawer-front, drawer knobs) but most were meaningless in terms of the chest of drawers (bits of wood, screws). But when Rachel read the diagram, the images helped her to read the array of objects on the floor which began to make sense as signs (particular screws; backs and sides, struts and beams) and their relationship to the completed object meaningful. The diagrams hinted at gestures that would transform the bits materially – this bit would go here, that fit there (although diagrams about how to turn an Allen key were not necessary).

As Roger disassembled engine parts he arranged them in a rough sequence around the car (not according to a system but according to situation; parts from underneath go in the sump tray, parts from on top go on the back of the engine compartment, parts from the wheel cavity go on the removed wheel or on the lift). But before

removing the water pump drivebelt he drew a diagram of its arrangement because he knew that its rubbery flexible properties meant that the way it fits around a set of wheels would disappear once it was separated from them. He trusted himself to be able to read the other objects he had removed in order to refit them onto the car but the water pump drivebelt would become unreadable in its relation to other parts – see Figure 2.

Whereas for Roger, most objects are immediately readable as signs of themselves (a bolt is recognisable as having a screw thread and not being a nut, its size is appropriate for some locations and not others), his diagram will mediate how the rubber belt relates to other objects, particularly the pulleys it goes around, even when the belt is removed and reverts to a featureless ellipse. Roger could never have read by sight what he drew because other things were in the way (see Figure 3) and much of Roger's reading of the objects on the car was through touch, a sort of 'haptic' reading of things, because of their inaccessibility.

In both instances, the use of the diagrams interrupts the normal flow of material interaction in which perception and gesture are simply part of a continuous process. Rachel stops working with the bits on the floor in order to read the diagram which then helps her to read the separate objects. Roger stops undoing car parts to draw a diagram that will help him to read the objects he has separated. Analytically these the interplay between perception and gesture in material interaction can themselves be set out diagrammatically as in Figure 4.

Towards the pragmatics of material interaction

In the absence of linguistic communication about or as part of material interaction it can be seen as a process in which the body of a person moves and makes contact with an object so that at least the object changes in accord with an intention that is recognisable within a cultural practice; we might call this process 'purposeful action' (Suchman 1987: 2). The material world is transformed in ways that are significant in terms of both the material relations of objects and their meaning. For example, a hand goes out and grasps an Allen key (the chest of drawers) or a Y-spanner (the pump drivebelt tensioner) and applies it to another object – a threaded bolt or nut. At the end of a sequence of material interaction, the side of the drawer is attached to the front or the pump drivebelt is released and separated from its pulleys. As well as the hand / eye coordination involved, the human has to know how Allen keys fit into the head of a bolt or how the spanner fits around the head of a nut. Both tool systems require an understanding of the operation of screw threads and how tight is tight in different circumstances. These are the sorts of material interactions that most of us take for granted as 'obvious' but that higher primates – including our own very young

children – have great difficulty with. How any given material interaction is to be achieved has to be learnt within a cultural context in much the same way as language, and indeed such practices are learnt alongside and with the support of language.

The relations between person and object(s) that produce pragmatic meaning in material interaction can be summarised in the following preliminary way:

1. **Intention:** Intentionality directs the engagement of perception and gesture with an object. Intentions may not be consciously thought or even recognised as such, but be simply part of the flow of action – as with routine practices and habits – but would in principle be recoverable after the event.
2. **Perception:** The object is perceived in relation to the body via the senses (in the examples used, of sight, touch and proprioception but may also include hearing, smell and taste). Perception involves the interpretation of sensory information through the knowledge and experience of material culture that enables objects and object arrays to be 'read' to identify objects, their form, qualities, properties, their current state, relation to other objects and how they would respond to gestures.
3. **Orientation:** The orientation of the body to the object is part of perception; range, direction, accessibility and amenability to gesture of the object or array of objects are read from a particular location of the body. The body may be moved to get a better view or prepare to act on an object as when the body is brought close enough so that objects are part of the 'manipulatory area' (see Dant 2005: 115-122).
4. **Manipulation:** A gesture begins as movement of the body brings about movement in the object that transforms it in some way, usually through the hands, often via the intermediary object of a tool. Touch here does 'work' in the sense of applying effort to bring about change in a way that doesn't happen with touch for simply reading the object.[13] Proprioception and the continued engagement of other senses means that perception continues and feeds back the effect of gesture – the tightness of a nut or bolt is felt through the tool and the gesture that works on it.
5. **Continuation:** A single gesture is seldom sufficient to realise an intention (pressing the 'on' button may be enough) so most gestures lead to repetitions or further gestures to achieve an accumulating effect in transforming the object. There is often a continuation of gesture that may not require a fresh intention or further interpretation of signs.

The presence of these pragmatic features produces the complexity of material interaction through which humans perceive and manipulate things in accord with their culture. It is very

difficult to pick up a spanner you haven't first seen and picking up a spanner without intending to would be meaningless and suggest an unusual mental state! Even when humans react 'intuitively' or 'habitually', apparently without conscious awareness, they are typically responding to perceptions with preformed sequences of gesture based on prior intention. There is always an asymmetry between humans and objects in material interaction (unlike the turn-taking reciprocity of conversation) because intentionality within the object is sometime in the past whereas intentionality of the human subject is focussed in the present. Despite the rapid increase in 'intelligent' objects with motors, memories, sensors, programmes and communicating systems, material interaction between humans and objects still follows the principle of perception and gesture. The intentionality designed into objects has always had the potential to shape the actions of humans that interact with them – handles 'invite' being handled, chairs 'invite' being sat on (Mead 1962: 186). Human perception 'reads' the state of the object and gesture at least initiates the work that changes the physical world – even if it is no more than touching a screen (Dant 2005: 132, Fig 6.18).

Conclusions

What this paper has argued is that material interaction involves an exchange of meaning between human beings and objects that is amenable to analysis independently of talk during or about the interaction. Human beings 'read' what objects mean by engaging with them through their senses – this sort of reading does not involve a formal language that can be separated from the objects, but involves perceptual engagement with objects in their current state and relations with each other. The consumer reads the intentions designed into objects and groups of objects and acts on them with appropriate gestures to bring about her or his purposes. Cultural knowledge of different types and workings of objects is brought into play but in order for material things to fit in with human purposes, the pragmatic meaning of objects must be read as contingent on their current situation and the changes they undergo under the force of human and other actions. Pragmatic analysis of material interaction involves attending to a number of subsidiary processes that I have suggested include; intentionality, perception, orientation, manipulation and continuation of an action. The cultural knowledge necessary for engaging in material interaction has to be learnt and is usually acquired through practices of demonstration, mimicry, instruction, advice and so on. As Merleau-Ponty says, 'it is clear that a child who had never seen an article of clothing would not know how to act with clothing' (1983: 170) – children learn, as do we all, what objects mean and what they are for through engaging with them in use within the culture.

Designed and made objects derive their meaning from how they fit in with human intentions which were anticipated when the object was formed: ‘To use a human object is always more or less to embrace and assume for one’s self the meaning of the work which produced it’ (Merleau-Ponty 1983: 170). Designers utter objects to be situated in semantic and syntactical relationships with other objects that already exist within the culture and the consumer realises the meaning intended in their design by taking them up in material interaction. The stuff of material culture then is amenable to being read by consumers – at least, by those humans experienced in the appropriate material culture – as having particular potentials for interaction and use and as being amenable to particular gestures, skills, habits and practices. The human capacity for interacting with objects – to both produce and consume them – is acquired over the life-course and held in the body in the same way as other knowledge such as the capacity to use language.[14]

Much like ordinary conversation, the pragmatics of material interaction with spanners and flat-pack furniture seems banal because we successfully achieve this sort of interaction all the time with little thought – this is what Barthes calls the ‘obstacle of the obvious’ (Barthes 1983: 184). However, the part that objects play in our lives helps to make our lives culturally what they are, partly through the symbolic associations they have, but also through the sorts gestures, actions and practices that they entail. These practices, which seem to us to be merely functional in terms of meeting needs, are sociologically significant as they locate us in particular cultures at particular times, and in relations with other people both near and far (Miller 1987, Dant 1999, Shove 2003).

Tim Dant, 20.08.07

References:

Barthes, Roland (1983) The Semiotic Challenge, Oxford: Basil Blackwell.

Barthes, Roland (1973) Elements of Semiology, New York: Hill and Wang.

Barthes, Roland (1990 [1967]) The Fashion System, Berkeley and Los Angeles: University of California Press.

Chaiklin, Seth & Lave, Jean (eds.) (1993) Understanding Practice: Perspectives on activity and context, Cambridge: Cambridge University Press.

Dant, Tim and Bowles, David (2002) Car Care: The Repair and Maintenance of the Private Car – Summary Final Report, mimeo, University of East Anglia.

Dant, Tim (1999) Material Culture in the Social World, Buckinghamshire: Open University Press.

Dant, Tim (2005) Materiality and Society, Maidenhead, Berkshire: Open University Press.

Dant, Tim (2006) 'Material Civilization', British Journal of Sociology, Vol. 57 (2) 289-308.

Dourish, Paul (2004) Where the Action Is: Foundations of Embodied Interaction, Massachusetts: MIT Press.

Engeström, Yrjö (2007) 'Collaborative Intentionality Capital: Object Oriented Interagency in Multiorganizational Fields', on-line Working paper, http://www.edu.helsinki.fi/activity/people/engestro/, accessed 15/08/07.

Goodwin, Charles (1994) 'Professional Vision', American Anthropologist, 96(3): 606-633.

Harper, Douglas (1987) Working Knowledge: Skill and Community in a Small Shop, Berkeley: University of California Press.

Heath, Christian and vom Lehn, Dirk (2004) 'Configuring Reception: (Dis-)Regarding the 'Spectator' in Museums and Galleries', Theory, Culture and Society, Vol. 21(6): 43-65.

Heath, Christian and Luff, Paul (2000) Technology in Action, Cambridge: Cambridge University Press.

Heath, Christian; Knoblauch, Hubert; Luff, Paul (2000) 'Technology and social interaction: the emergence of "workplace studies"', British Journal of Sociology, Vol. 51 (2) 299-320.

Hindmarsh, Jon and Heath, Christian (2000) 'Sharing the Tools of the Trade', Journal of Contemporary Ethnography, Vol. 29 (5): 523-563.

Hindmarsh, Jon and Heath, Christian (2003) 'Transcending the Object in Embodied Interaction' in J. Coupland and R. Gwyn (eds) Discourse, the Body and Identity, Houndmills, Basingstoke: Palgrave Macmillan.

Husserl, Edmund (1973) The Idea of Phenomenology, The Hague: Martinus Nijhoff.

Lave, Jean and Wenger, Etienne (1991) Situated Learning: Legitimate peripheral participation, Cambridge: Cambridge University Press.

vom Lehn, Dirk; Heath, Christian; Hindmarsh, Jon (2001) 'Exhibiting Interacton: Conduct and Collaboration in Museums and Galleries' Symbolic Interaction, 24 (2): 189-216.

Leroi-Gourhan, André (1993 [1964]) Gesture and Speech, Cambridge, Massachusetts: MIT Press.

Levinson, Stephen (1983) Pragmatics, Cambridge: Cambridge University Press.

Luff, Paul; Hindmarsh, Jon; Heath, Christian (2000) Workplace Studies: Recovering Work Practice and Informing System Design, Cambridge: Cambridge University Press.

McCracken, Grant (1990) Culture and Consumption: New Approaches to the Symbolic Character of Consumer Goods and Activities, Bloomington and Indianapolis: Indiana University Press.

Mead, George Herbert (1962) Mind, Self and Society, Chicago: University of Chicago Press.

Merleau-Ponty, Maurice (1962) Phenomenology of Perception, London: Routledge.

Merleau-Ponty, Maurice (1983) The Structure of Behaviour, Pittsburgh: Duquesne University Press.

Mey, Jacob (2001) Pragmatics: An Introduction, Oxford: Basil Blackwell.

Miller, Daniel (1987) Material Culture and Mass Consumption, Oxford: Basil Blackwell.
Morris, Charles (1971 [1938] 'Foundations of the Theory of Signs' in Writings on the General Theory of Signs, The Hague: Mouton.
Peirce, Charles Saunders (1991) Peirce on Signs: Writings on Semiotic By Charles Saunders Peirce, Chapel Hill: University of North Carolina Press.
Robertson, Toni (nd) 'The Stamp of Movement on Human Action', Working Paper, Interaction Design and Work Practice Laboratory, University of Technology, Sydney, *http://research.it.uts.edu.au/idwop/downloads/RobertsonMovement.pdf*, (accessed 15/08/07).
Larssen, Astrid Twenebowa; Robertson, Toni; Edwards, Jenny (2006) How if Feels, not Just How it Looks: When Bodies Interact with Technology, in Proceedings of Australian Computer Human Interaction Conference (OzCHI) 2006, Sydney, Australia, 20-24 November, 2006.
Leont'ev, A. N. (1979) 'The Problem of Activity in Psychology' in J. V. Wertsch (ed.) The Concept of Activity in Soviet Psychology, Armonk, New York: M. E. Sharpe, Inc.
Schatzki, Theodore (1996) Social Practices: A Wittgensteinian Approach to Human Activity and the Social, Cambridge: Cambridge University Press.
Schiffer, Michael Brian with Miller, Andrea (1999) The Material Life of Human Beings: Artifacts, behaviour, and communication, London: Routledge.
Schiffer, Michael Brian (ed.) (2001) Anthropological Perspectives on Technology, Alberquerque: University of New Mexico Press.
Shove, Elizabeth 2003 Comfort, Cleanliness and Convenience: The Social Organisation of Normality, Oxford: Berg.
Suchman, Lucy (1983) Plans and Situated Actions: the problem of human - machine communication, Cambridge: Cambridge University Press.
Suchman, Lucy (2000) 'Making a case: 'Knoweldge' and 'routine' work in document production', in P. Luff, J. Hindmarsh & C. Heath (eds.) Workplace Studies: Recovering Work Practice and Informing System Design, Cambridge: Cambridge University Press.
Suchman, Lucy, Trigg: Randall; Blomber, Jeanette (2002) 'Working artefacts: ethnomethods and the prototype', British Journal of Sociology, Vol. 53 (2): 163-179.
Verrips, Jojada & Meyer, Birgit (2001) "Kwaku's Car: The Struggles and Stories of a Ghanaian Long-Distance Taxi-Driver", in D. Miller (ed.) Car Cultures, Oxford: Berg.

Figure 1. Diagrams for assembling a chest of drawers

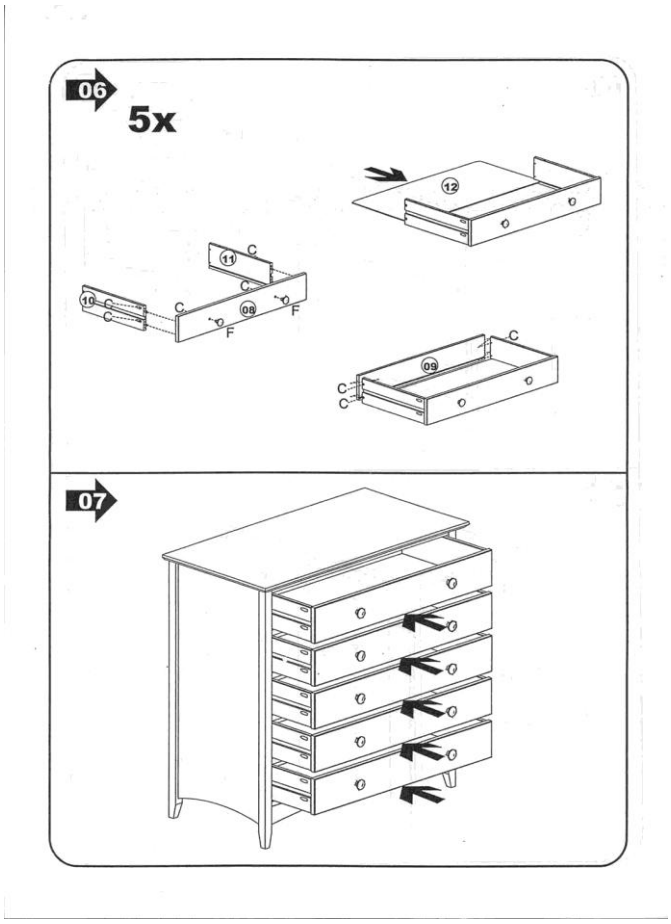

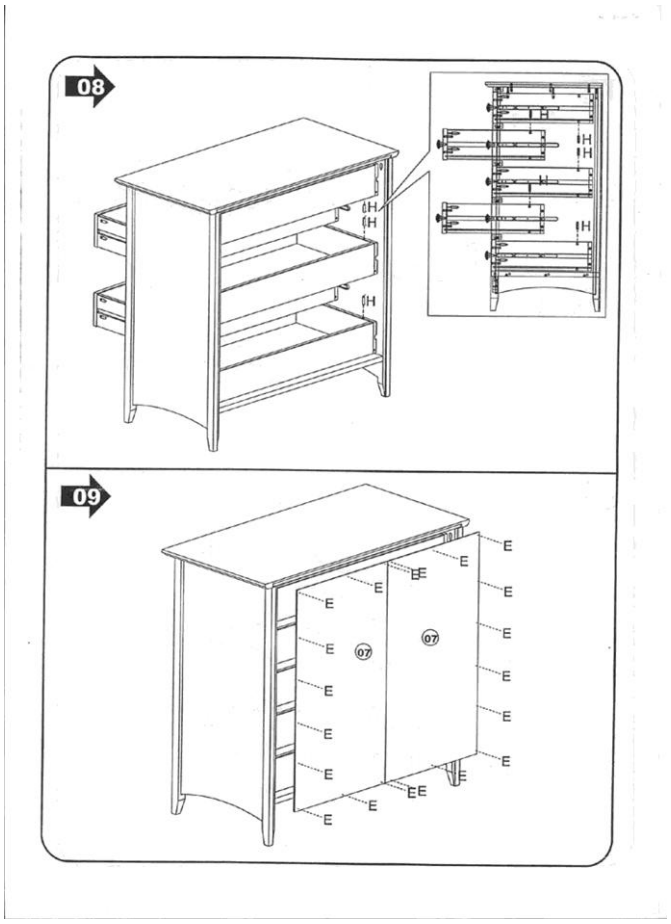

Figure 2: Water pump drivebelt diagram

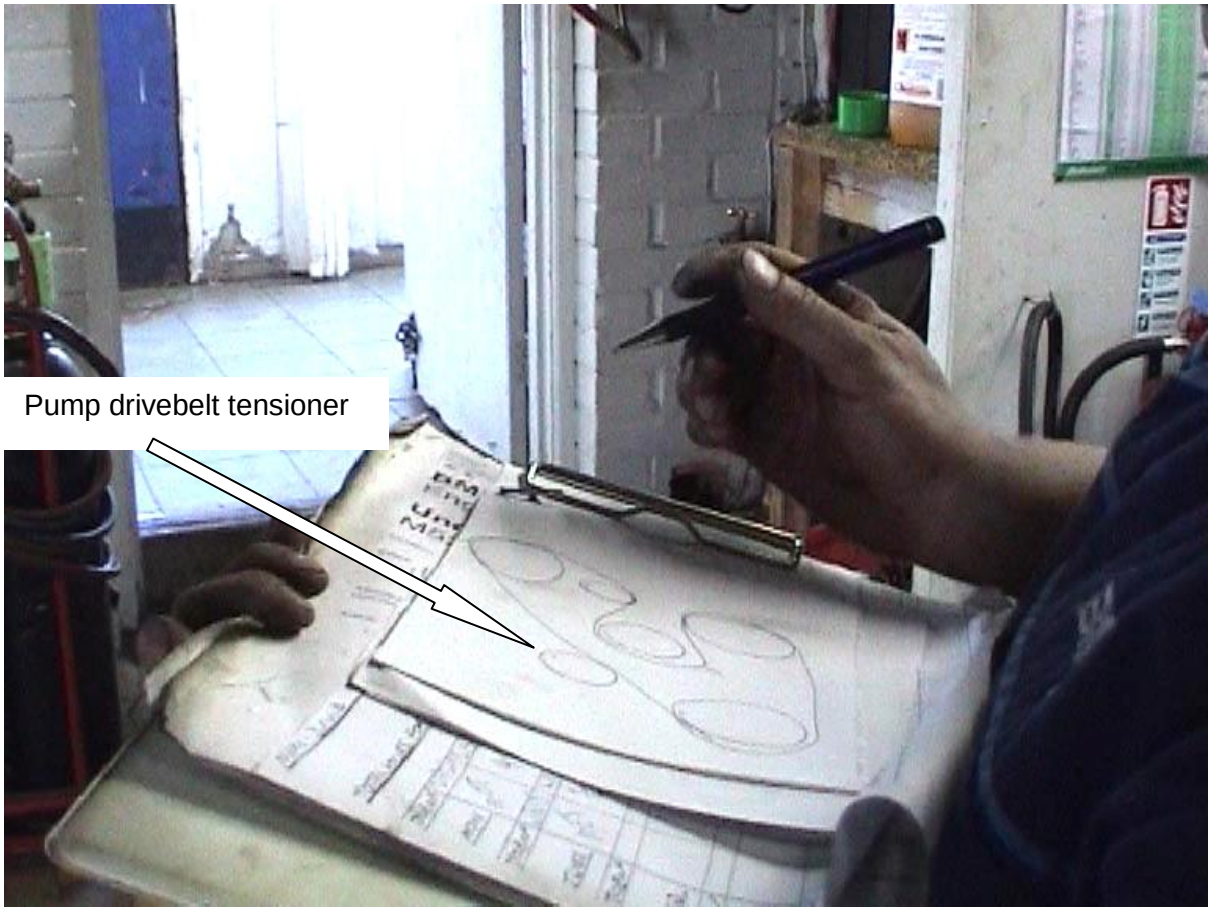

Figure 3: Removing the pump drivebelt

The view is looking up under the car over Roger's left shoulder; the wander light in the bottom foreground casts light on the spanner held between his two hands that is just about to engage with the pump drivebelt tensioner.

Figure 4: The pragmatic relations of material interaction

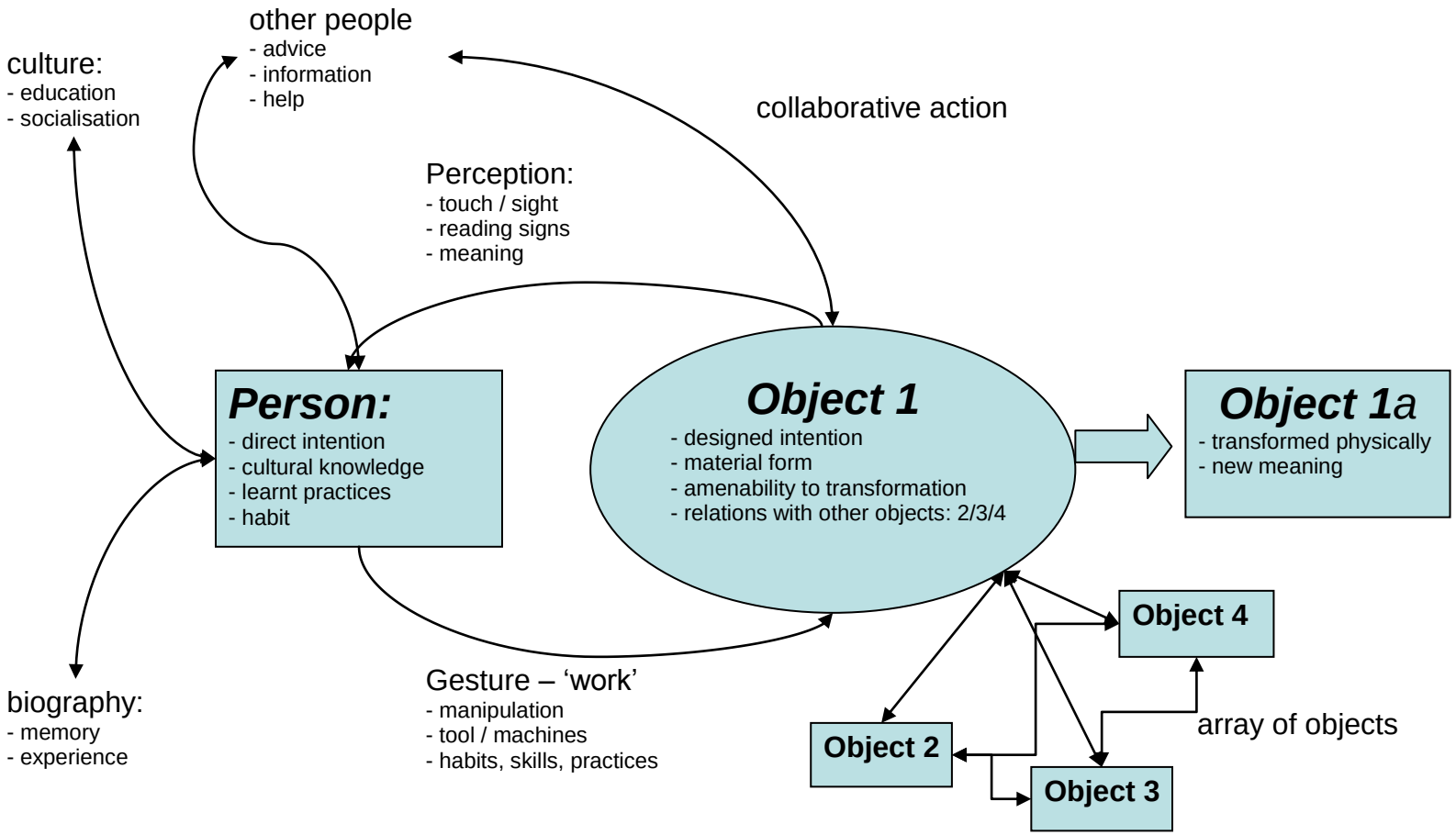

[1] This illustrative example is based on the author's experience offered here as 'autoethnography'.

[2] This case, documented with video data and fieldnotes, is taken from the study Car Care: The Professional Repair and Maintenance of the Private Car, funded ESRC Small Grant No: R 00023370 (Dant and Bowles 2002)

[3] Building flat-pack furniture and repairing a car are activities that 'produce' the good in a state fit for use. However they occur *after* formal production is complete and it is the consumer who takes responsibility for these activities as part of what is entailed in consumption. So the car technician is a service worker doing 'consumption' work on behalf of the owner (unless he is doing warranty work on behalf of the manufacturer). Consumption involves more than simply the purchase of goods – as McCracken (1990, 83-87) pointed out there are a range of 'ritual' activities that the consumer undertakes as part of using or using up a commodity.

[4] I will use 'the designer' here while recognising that almost all design is a team process such that it would be very difficult to ever identify *the* designer. The connection with manufacture means that production engineers are a part of the design process and design might more usefully be thought of as 'design and manufacture'. The aspect of design that is important here is the application of thought and planning to the process of material interaction in use.

[5] The group is led by Christian Heath and core members include Paul Luff, Jon Hindmarsh and Dirk vom Lehn.

[6] I am greatful to Jon Hindmarsh and to the three anonymous referees for the Journal of Consumer Culture for reading earlier drafts and reminding me of the breadth of this literature and the variety of its approaches.

[7] The utterance "Meet me here in a week from now with a stick about this big" is a sentence in which the meaning is very unclear even though it is syntactically and semantically coherent. As Levinson puts it: 'We don't know *who* to meet, *where* or *when* to meet him or her, or *how big* a stick to bring' (1983: 55). The utterance depends on pointing to its context of utterance to answering these questions of meaning and no amount of interrogation of the semantic basis of the words or their syntactical relations will provide answers. Both Suchman and the WIT group have demonstrated with empirical analyses how the material context of a situation is incorporated into linguistic exchange through indexicality; language use makes reference to material stuff that is necessary for it to make sense.

[8] Maurice Merleau-Ponty distinguishes the child's response – which is to attempt to understand the meaning of the object through its cultural milieu – from that of the monkey, which never goes beyond a functional relationship with the object (1983: 169-175).

[9] Of course these meanings have changed radically since Barthes was writing (originally in 1964) – coloured plastics, including creams and have become much cheaper to produce so the connotations of luxury and femininity have to be carried by other features of appearance and use.

[10] Husserl says 'Cognitive mental processes (and this belongs to their essence) have an *intentio*, they refer to something, they are related in this or that way to an object' (1973 :43). Merleau-Ponty takes intentionality further than being a cognitive process that is directed to something: 'What distinguishes intentionality from the Kantian relation to a possible object is that the unity of the world, before being posited by knowledge in a specific act of identification, is 'lived' as ready-made or already there' (1962: xvii). It is through language and cultural experience that intentionality is able to be directed to something and there are 'several sorts of intention' – desire, will, fear – that are not necessarily reducible to representation (Merleau-Ponty 1983: 172). The complexity of intentionality for Merleau-Ponty, is nicely put when he says 'consciousness is a network of significative intentions which are sometimes clear to themselves and sometimes, on the contrary, lived rather than known' (1983: 173).

[11] Leroi-Gourhan's use of the term gesture is not limited to bodily actions that have no purpose other than to communicate meaning directly between humans. He uses the term, sometimes as 'technical gesture', to point to the meaningfulness of actions in relation to things, especially tools, that are not instinctive but acquired through culture's shaping of what the body can do, e.g. 'The complex actions of grasping, handling and kneading which already existed at the primitive anthropological stage still account for a large share of our technical gestures today.' (Leroi-Gourhan 1993: 242).

[12] 'Now reasoning has to make its conclusions manifest. Therefore, it must be chiefly concerned with forms, which are the chief objects of rational insight. Accordingly, Icons are specially requisite for reasoning. A Diagram is mainly an Icon, and an Icon of intelligible relations.' (Peirce 252)

[13] 'It is by design that, instead of speaking of action as do most contemporary psychologists, we choose the Hegelian term "work", which designates the ensemble of activities by which man transforms physical and living nature' (Merleau-Ponty 1983: 162).

[14] For example, Doug Harper (1987) describes how Willie, a local jobbing engineer, reads the signs of heat in the colour of the metal he is welding, and is able to fine tune his gestural response of applying more or less heat, water or ice to temper and shape it for the purpose he intends. Harper calls this 'kinesthetic knowledge' that is learnt as a child and built on throughout life (Harper 1987: 133).