View metadata, citation and similar papers at core.ac.uk
brought to you by CORE
provided by Research Papers in Economics

A MODEL OF THE POLITICAL ENTERPRISE

Mario Ferrero

Department of Public Policy and Public Choice *"Polis"*
University of Eastern Piedmont "Amedeo Avogadro"
Corso Borsalino 50, 15100 Alessandria, Italy.
Fax +39 0131 263030.
Email <ferrerom@sp.al.unipmn.it>

ABSTRACT. Political organizations engaged in long-term operations are viewed as firms that sell promises: their output is the expectation of a reorganization of society. Because benefits will accrue to the organization's customers and rewards will be paid out to its workers only if and when the goal is achieved, the workers are volunteers in the sense that they engage in unpaid effort today in exchange for a probabilistic reward tomorrow. Because a market for promises is the ideal ground for reciprocal cheating, some mechanisms to ensure reciprocal trust must be devised if exchange is to take place at all. Three problems of reciprocal trust are discussed: the firm's credibility *vis-à-vis* its workers, workers' shirking, and the firm's credibility *vis-à-vis* its customers. It is shown that a viable solution to these problems in effect turns the political firm into a kind of producer cooperative. It is then shown that the intrinsic inefficiency of a market made up of producer cooperatives makes merger likely, until a single firm remains. Then it is argued that these trust problems are further lessened if the firm undertakes commercial production on the side, with important consequences for its behavior: this is analyzed with a formal model of a two-product cooperative. These features of the political enterprise and industry are finally shown to account for a variety of observed facts of political life.

1. Introduction.

Politics can be, and often is, an incredibly successful line of business. When politicians succeed in getting hold of power, the rewards of success can be truly enormous -- to the disappointment of those who had believed them to be unselfish devotees to the common good. Political organizations of any permanence, engaged in a long-lasting struggle to achieve their power objectives, often live through several generations and rival in longevity the most successful business firms. Yet these people and organizations typically behave and function in ways that are very different from the ways of business people and business firms in a market economy. First, although many investors may be presumed to be willing to acquire stakes in such successful ventures, there is no way in which outsiders can take control and no institutional mechanism, such as the stock exchange, through which ownership of these organizations can change hands. Second, political leaders and activists, at least before success, often display austere and frugal consumption habits and engage in menial tasks in a way that is not required, nor observed, of normal business entrepreneurs or managers. Third, markets for specific brands of political products often display unusually high concentration ratios or even monopoly supply, a feature that is not easily explained by entry barriers: after all, political action requires only ideas (which are free for all to use), generic labor and entrepreneurship, and little else. Fourth, political organizations usually engage in activities of a more short-run, commercial nature on the side, even though these activities often appear to be unprofitable and would better be left to competing producers at less cost. Fifth, competition in the commercial product market has ambiguous effects on the political organization's choice of input and output mix: it may increase or decrease, and even discontinue, its commercial production, and it may increase or decrease, and even discontinue, its political production, yielding a pattern of reactions that is not obvious to understand and is unlike that of ordinary business firms. Lastly, political organizations are prone to abruptly change the specifications and timing of their goals and platforms when they achieve success, in a way that would be unthinkable for other successful business firms: they would never change a car model that sells unexpectedly well.

To address these questions we need a model of the political organization. Amazingly, the existing literature on the economic approach to political behavior has apparently studied everything except the basic unit of policy supply: the political organization understood as a firm. Standard approaches to interest group politics, such as Olson (1965) and Becker (1983), simply collate the interest group with its representative organization in a way that is not useful to bring out issues of enterprise organization. This paper begins to fill the gap by building a simple model of the political enterprise. The basic approach is that in its pure form a political organization is a firm which sells promises to all concerned, and that selling promises raises problems of reciprocal opportunism in exchange so severe that their resolution sharply constrains the range of organizational forms and contracts that the firm may choose. The central proposition, which is developed in the next section, is that such a firm will typically take on the form of a producer cooperative, or labor-managed firm, which explains many perplexing traits of its behavior. Furthermore, the cooperative will usually have to engage in more tangible production alongside the promises, which yields a multi-product firm which is formally modelled in the following sections 3 and 4. Although this is mainly a theoretical paper, section 5 applies the model's comparative statics to a real-world case. Section 6 draws together the main conclusions.

2. The political enterprise as a producer cooperative.

Consider an organization which specializes in the business of selling promises, and restrict attention to promises of a better life on earth (leaving aside promises for the afterlife). Such promises involve a more or less extensive reorganization of society and are therefore political in nature: they may be a far-reaching social change, a redistribution of wealth, income or job security, better employment contracts for workers, national independence, ethnic or racial revival, world domination, a cleaner environment, protection of endangered species, minorities' rights, clearing impure strangers away, cleansing the body and mind of corrupting foods and habits, or whatever. "Selling" such promises involves exchanging current support from the target population for future, expected benefits, and the time horizon over which the promises will be delivered on is typically a very long one. If and when the goal is achieved, perhaps in a piecemeal fashion, then its benefits accrue to the organization's followers and perhaps to everybody (a public good from the organization's viewpoint), and the organization's members or workers get the reward for their effort in terms of power and the rents and privileges associated with it (a private good). Before that day comes, however, there is no monetary revenue from sales that the organization can use to pay its workers. Selling promises to customers thus entails selling promises to workers as well. Therefore, a first basic feature of a political enterprise is that it is a volunteer enterprise. Its members are "volunteers" not because they are unselfish or altruistic, on the contrary they are ordinary, self-interested people who make an investment in labor time, *i.e.* who engage in unpaid effort today in exchange for probabilistic reward tomorrow (Menchik and Weisbrod, 1987): their compensation is the present value of the reward the firm promises to pay them in the event of success weighted by the probability of success.

Given the firm's platform or program, increased effort by workers increases popular support and/or command on resources and thereby the expected payoff, *i.e.* the value of the rent from power and/or the probability of success, though presumably at a diminishing rate. There are thus decreasing returns to labor in political production. Also, there is a fixed factor that sets a limit to economies of scale, and this is the unique capabilities of management, or political leadership; thus the size of the firm is in principle well defined. On the other hand, the firm's "product" -- its platform, goal, or program -- is defined within an ideology or worldview, broadly understood, which structures political discourse and makes this firm's activities intelligible to both customers and fellow producers. Ideology here serves the role of a paradigm that makes competition feasible in the market for ideas (Breton and Wintrobe, 1992). But, much as with religions founded on a Book, the "true" interpretation of a given ideology is always debatable: since the ideology is there for everybody to use, *i.e.* it is a common-property asset for political production, someone can always come up and challenge an established firm's interpretation of ideological tenets, *i.e.* set up a competing firm. Since doing this requires only generic, unskilled labor and managerial talent (leadership), and since an unreliable leader's inability to deliver on his promises will show up only *ex post*, it follows that entry will be relatively easy, that is, the market for political promises will be very competitive, even if as often as not it will be a competition from quacks.

In order to survive in the harsh environment of the market for promises, our political enterprise must solve three problems. These all stem from the basic fact that promises are the ideal ground for reciprocal cheating, and cheating threatens the very possibility of effecting exchange, so some effective mechanisms to ensure reciprocal trust must be devised if trade is to take place at all. First, the firm may cheat on its workers, *i.e.* renege on its contractual obligations and pay them nothing, or less than promised, when the goal is achieved and the payoff materializes. Reputation cannot generally be counted upon to ensure firm credibility because its transactions need not be repeated in an even more distant future. A typical solution here involves structuring rewards as unequal prizes auctioned off in tournaments or contests, as is so often observed in real-world political organizations. Tournaments solve the firm's credibility problem in the absence

of reputations because they completely and explicitly predetermine total costs beforehand, so the firm has nothing to gain from cheating on contest outcomes (Carmichael, 1989)[1]. While this important subject deserves further analysis, however, we will not pursue it any further in this paper and simply assume that the firm's credibility problem *vis-à-vis* its workers is somehow solved.

Second, workers may cheat on the firm, *i.e.* shirk either on the quantity or, even more critically, the quality of effort put forward. Here I take it as self-evident that in political production both the potential for shirking and the damage from shirking are enormous, which together imply that monitoring is prohibitively costly and incentives are crucially important. Incentive problems in situations of low monitoring intensity are typically dealt with in the employment contract literature through an efficiency wage mechanism, whereby low probabilities of detection combine with heavy utility losses from dismissal effectively to deter shirking (Shapiro and Stiglitz, 1984; Calvo, 1985). However, the threat of dismissal is no longer a penalty if there is full employment because workers can at once find another job at the same wage (unless they can be made to bear a stigma for misconduct). As argued above, because labor is essentially the only production factor, barriers to entry in the political product market are very low, hence the market for political labor always clears as workers dismissed from a given firm can at once set up a competing firm. This leaves us with only one, albeit imperfect, incentive mechanism: full revenue sharing, whereby the workers' pay is wholly in the form of a share in expected revenues, not a fixed expected wage, and therefore they acquire an interest in the performance and fortunes of the firm. It is an imperfect solution because there is free riding in team production and horizontal monitoring is also costly, but it seems to be the only one available in the circumstances. In a sense, it seems to be inherent in political work, which of necessity is paid for out of uncertain future earnings, that one runs a risk and expects to receive a predetermined share of whatever payoff will be forthcoming, not a predetermined fixed payment come what may: in a political enterprise all sink or swim together.

In principle, and sometimes also in fact, even a 100 percent participatory or revenue-sharing firm can be a capitalist profit-maximizing firm whose ownership can be traded on the market. Political enterprises, however, are never bought and sold the way economic entreprises are -- in fact there is no equivalent to the stock exchange for them. The reason can be traced back to the third problem of mutual trust that a political firm has to solve, this time *vis-à-vis* its customers: these must have some assurance that the quality of the political product is worth their support -- the "lemons" problem. Because it is a one-time transaction, firm reputation here cannot work. Because it is a restructuring of (part of) society, risk insurance or, equivalently, buy-back warranties are not feasible either. We are dealing here with a truly extreme case of the kind of informational asymmetry or contract failure that is advanced in the literature (Hansmann, 1980; Easley and O'Hara, 1983) to explain the emergence of the nonprofit form of enterprise: when product quality cannot be ascertained even after purchase or, as in our case, the *ex-post* consumer loss from quality deterioration is truly enormous, a self-imposed constraint on the distribution of profits may to some extent protect the customer by reducing the firm's incentive to cheat on quality. But how can a nonprofit constraint credibly be enforced on a firm that sells future states of society? Or, conversely, how can such a firm credibly precommit not to take the customers' money and run? If it succeeds, it will by definition have the power to cash in its profits irrespective of its *ex-ante* commitments; if it fails, it will collapse and the followers' support will have been wasted away. The only device that appears to be available is to impose <u>today</u> a verifiable constraint on the owner/leader's future stream of consumption or utility. This means two related things: first, requiring that political leaders be ostensibly austere and frugal in their lifestyle and consumption habits -- from Robespierre's vaunted reputation as "the incorruptible" to Mao Zedong's and Fidel Castro's wearing shabby military uniforms all the time. Second, and more important for our purposes, requiring that the owner <u>work</u> in the firm, *i.e.* be its manager, as a condition for holding ownership and control rights in it -- much in the way that autocratic rulers and dictators have for centuries had their cook try their food first. If I do observe these two visible behavioral features -- so a rational customer of

[1] This goes some way toward explaining the firm's side of why revolutionary regimes, for example, reward their veteran or deserving

a political firm may be supposed to reason -- I have some reason to believe that the leader will at least think twice before embarking upon the wildest adventures or ill-conceived plans. Conspicuous frugality in consumption and direct exertion of effort by the leader are thus the two faces of a "nonprofit" constraint enforced by a rational consumer as a condition for trusting the political enterprise.

The first requirement implies that prospective political entrepreneurs will choose to engage in this line of business only if future rewards upon success are large enough to compensate for the forced underconsumption before success. The "greed" so obviously displayed by successful revolutionaries after the conquest of power is thus but a natural consequence of an intertemporal consumption plan which is constrained to be strongly skewed towards the future. The second requirement, on the other hand, has even more far-reaching consequences. It immediately implies that ownership cannot be divorced from management: the head of the political enterprise is like the single owner-manager-entrepreneur of the classical firm. Ownership rights are thus restricted on one important dimension. But furthermore, coupled with the revenue-sharing feature derived above, the work requirement implies that the political firm in effect becomes a <u>producer cooperative</u>: a firm in which all workers, <u>including the owner-manager</u>, share among themselves the whole expected revenue is in fact, if not in name, a worker-owned, worker-managed firm, although the shares may be, and usually are, very unequal (as suggested by the contest form of remuneration discussed above). "Ownership" of the firm is then further restricted: as a cooperative, the firm may not have owners that are not workers, so it cannot be sold to outside investors; ownership or, better, control can change hands only through takeovers from within, *i.e.* political infighting, or through mergers and splits. Only a political worker can become boss -- which is the way real-world political organizations function. In this approach, it is the cooperative nature of political firms that accounts for the nonexistence of a market for control rights in such firms.

If the reasoning so far is accepted, then the standard model of the labor-managed firm (LMF) can be readily put to use[2]. As a cooperative, the objective of the political firm is to maximize expected net income per capita (a convenient, harmless simplification) under the usual technology and demand constraints. Unlike in a profit-maximizing firm, labor income here is not a market parameter (a wage) but an endogenous variable that is determined in the firm simultaneously with the employment level. Per capita worker income is maximized at an employment (and therefore output) level at which this income equals the marginal revenue product of labor. This equilibrium condition has four well-known implications worth noting. First, given different levels of the fixed factor across firms (differences in leadership and organizational skill), worker income will be different across firms. Second, and consequently, marginal revenue product of labor (MRPL) will be different across firms, which implies that the overall allocation of labor among firms will be inefficient. These two features persist in equilibrium because there is no way that low-paid workers can bid entry into higher-paying coops and thereby equalize marginal products. Third, for the same reason, the level of employment in each firm and in all given firms together is independent of, and insensitive to, labor supply. In our case, however, the political labor market clears because the unemployed can easily employ themselves by setting up a new firm, that is, because of free entry. Fourth, the model's comparative statics shows that a parametric increase in marginal revenue product (such as an exogenous increase in output price) has the perverse effect of lowering labor demand and therefore output supply, which implies a backward-bending output supply curve. This poses a classic, intractable problem to the cooperative: when market conditions improve, it should optimally react by firing some of its members so that the remainder's income may further increase. Rigidities, risk aversion on the part of members, variable work hours, variable inputs other than labor,

---

members by allocating top-level jobs or political positions among them, not cash (Ferrero, 1999).

[2] For a good introduction to the labor-management model see the textbook-style survey by Bonin and Putterman (1987) and the literature cited therein. A fuller analytical treatment is Ireland and Law (1982). The multi-product case and the labor-supply constraint are analyzed by Domar (1966) while the degeneration theory via substitution with hired labor is developed in Ben-Ner (1984).

and multiple outputs can somewhat mitigate, but never eliminate, this perverse and inefficient result. It will be retained and exploited in the analysis that follows.

The next step is to characterize market equilibrium. The firm equilibrium described above implies that a competitive political market made up of cooperative firms will be very inefficient because in equilibrium marginal revenue products of labor are unequal across firms: aggregate output would increase if workers could move from low-MRPL to high-MRPL firms but this is precluded by internal income maximization in each firm. As the literature has made clear (Nuti, 1983, 1985a, 1985b; Cugno and Ferrero, 1984, 1985), the chief decentralized mechanism available to improve allocative efficiency in a system of LMFs is merger. If two coops merge at an unchanged level of total employment, their MRPL's are equalized by relocating workers from one firm to the other and total output, and therefore per capita income, increases (though this will normally imply side payments, or inegalitarian income shares, to make the merger profitable to all concerned). Moreover, under normal conditions (*i.e.* if there are nondecreasing returns to scale once management/leadership becomes a variable factor) total employment will also not decrease. Since this source of efficiency gains from merger is not exhausted as long as there remain productivity differences across firms, the merger process may be expected to go on until a single firm, or an all-embracing cartel, is reached. Because market entry is very easy, however, such a cooperative monopsony is not restrictive as it takes in all potential firms and therefore clears the labor market. This monopsony result corresponds closely to observation. Political markets specialized in a particular product of the long-term kind considered here usually exhibit very high concentration ratios and often a single dominant party or organization. This is not easily explained on the product market side if, as we have argued, there is no exclusive patent protecting the ownership of ideology and other nonlabor inputs are not important, that is, if the market is easily contestable. On our interpretation, monopoly supply is but the consequence of monopsony demand for political labor, which in turn is the final outcome of a merger drive that arises out of the specific kind of inefficiency in labor allocation that is unique to cooperative market equilibrium.

For the remainder of this paper, it will be assumed that the benefits from complete merger outweigh any transaction costs arising from committee decision making and conflicts within the cartelized leadership so that the monopsony-monopoly solution obtains. Even so, our picture of the working of a political firm still seems to miss a crucial ingredient. Normally, political organizations do not confine themselves to just selling promises. They also undertake a broad range of activities that yield cash revenues in the short term, here and now. As a consequence, they can afford to pay their members some cash, not just promises. For example, revolutionary parties engaged in a long-term struggle for a socialist or communist society (in Europe and Asia) or for national independence and the overthrow of colonial rule (in the Third World) soon learned to produce and deliver more tangible goods on a current basis (see Ferrero, 1995): from organizing labor unions, consumer cooperatives, professional schools, charities, mutual savings and insurance funds, cultural and recreational clubs, "liberated areas" in which literacy and basic sanitation were provided by the organization's volunteers, down to pressing short-term, specific demands on various levels of government through elections or lobbying. All these activities yield cash revenue in one way or other, which helps finance the organization's principal task, much in the way that nonprofit organizations cross-subsidize *e.g.* their environmental education campaigns by selling postcards and T-shirts for cash (see James, 1983; James and Neuberger, 1981). However, the scale of such side activities undertaken by political firms has often been very substantial, sometimes in fact overshadowing their purported main job. As we assumed that political production requires just labor and management and little more, and that labor and management are paid in promises, how are we to explain the enormous growth of "commercial" production by political firms?

One crucial factor, at least in the initial stage, is the need to build consumers' trust in the firm. We introduced above a kind of dual nonprofit constraint on the firm by which the customers try to protect themselves from outright cheating, or moral hazard on the part of the firm. But even this is likely to be insufficient at the inception of the market

relationship. Even granting that these people are honest and well-meaning, how do we know that they are not hopelessly incompetent or crazy? After all they are trying to take us along on a grand project of radical transformation. We will be wise first to put them to test on something tangible for close delivery and see what they can do. These commercial goods are not a monopoly preserve of the political firm: they can be, and often are, supplied also by competing producers uncommitted to this particular political product, or to any political product at all. But buying the goods from the political firm yields indirect but valuable additional information on the quality of the firm's political product and on the trustworthiness of its management. Therefore the larger the firm's commercial production, up to a point, the more extensive the customers' experience of the firm's dealings and the higher their willingness to patronize (or "pay for") its political product. Sooner or later, however, commercial production will reach a threshold size beyond which it begins to adversely affect the customers' willingness to pay for the political good: the commercial good turns out to be so beneficial and helpful in itself as to diminish the public's demand for the political good. So there will be an optimal size of commercial output from the credibility point of view.

Furthermore, if consumer trust were the only factor, only the firm's delivery of the commercial good would matter, not the way it is produced. It could and presumably would be produced by sorting out the coop's workforce into two separate groups, one engaged in political production and the other in commercial production, thereby reaping the benefits of specialization. Moreover, when cheaper labor is available on the market that can effectively substitute for the members' labor (as must be the case given that the good is being produced by other, noncooperative firms), it would be to the members' advantage to replace cooperative production of the commercial good with capitalist production by salaried employees. Neither of these developments is usually observed: the good is typically produced in-house by members' labor even when this is obviously not the least-cost solution, and every member must take a turn in commercial production at least for some period of his/her tenure with the cooperative. As these apparently inefficient production practices are routine, the reasons must lie deep in the exchange relationship between the firm and its workers.

For one thing, paying part of the members' dividend in cash on a current basis, in addition to promises for the indefinite future, lessens the firm's credibility problem *vis-à-vis* its workers which was mentioned in passing above. More crucially, work on commercial production and cash wages are a probably indispensable supplement to the incentive of revenue sharing, discussed above, if the firm is to overcome a potentially devastating problem of shirking and poor work performance in political production. This can be seen in two ways. First, offering to pay some monetary compensation, and thus recruiting workers who are only part-volunteer, may be crucial in securing a better self-selection of candidates for membership and therefore a workforce better suited to the political work. For example, this has been a very real problem in the life of European working-class movements: due to an obvious liquidity constraint, if the rewards had been only promises they would have recruited only millionaires and well-to-do intellectuals, hardly an appealing prospect for an organization that purported to represent the working class. Second, and at least as important, effort expended on commercial production is more easily monitored and shirking more easily detected than on political production: therefore putting everyone to do a little bit of everything is a device for the firm to gain information on each worker's behavior and to lessen the all-important difficulty of monitoring effort in political production. For these two reasons, working in the commercial production up to a point enhances productivity in political production at all stages of the organization's life. Beyond some critical level, however, further growth of the commercial sector begins to adversely affect political productivity: workers become so involved with, and competent at, commercial production as to feel less and less committed to the political perspective and to treat political work as a corvée, or an entry fee, that earns access to the wages of the commercial sector. On the alternative interpretation, adverse self-selection now takes place whic attracts more money-minded, less "idealistic" types. Therefore as with the trust factor, there is bound to be an optimal size of commercial

employment from the incentive point of view, though it need not coincide with the optimal size from the credibility point of view.

The above reasoning suggests that commercial production and the employment of coop members' labor in it will likely be carried beyond the level that would be justified on strictly commercial grounds alone. On the other hand, the existence of a commercial sector raises problems of its own for the firm. For one thing, there will often be frictions and tensions between political leaders concerned with the main political job and commercially-minded officials who would strive for more efficient management of the commercial sector. Then, the fact that commercial production is subject to market competition is likely to raise new dilemmas. If this production is very profitable, the temptation may grow very strong to discontinue political production altogether. On the other hand, if sales revenues fall, should the coop increase commercial production to make good for the shortfall in its cash intake and continue to support indirect monitoring? Or should it curtail production or even terminate it to specialize on political production alone? We have seen above that the one-good coop typically reacts to changes in market parameters in ways different from a profit-maximizing firm. Extension of the analysis to the multi-product cooperative is somewhat more complicated and requires formal modelling, which is the subject of the next section.

3. A model of a two-product political cooperative.

Consider a producer cooperative which uses only its members' labor, M_1 and M_2, to produce two normal goods, a "political good" q_1 and a "commercial good" q_2. There is no capital and no fixed costs. As explained above, use of members labor in q_2 production does more than just increasing q_2 output: within a range, it enhances productivity in the production of q_1 because it permits indirect monitoring and reduces shirking, and also because it allows recruitment of better workers by paying them cash instead of just promises. Beyond that range, however, increasing M_2 begins to decrease productivity in the q_1 sector for just the opposite reasons: so there must exist a positive level of M_2 at which q_1 reaches a maximum for any given level of M_1, or $\frac{\partial q_1}{\partial M_2}=0$. Thus, while q_1 production requires direct labor M_1, M_2 enters its production function as a productivity-augmenting or -reducing factor. Production functions exhibit diminishing returns as usual:

$q_1 = q_1(M_1, M_2)$ with $\frac{\partial q_1}{\partial M_1}>0$, $\frac{\partial q_1}{\partial M_2}$ first >0 then <0 ; $\frac{\partial^2 q_1}{\partial M_1^2}$, $\frac{\partial^2 q_1}{\partial M_2^2}<0$;

$\frac{\partial^2 q_1}{\partial M_1 \partial M_2}$ first >0 then <0 ; and $q_1(0, M_2)=0$ (1)

$q_2 = q_2(M_2)$ with $\frac{\partial q_2}{\partial M_2}>0$; $\frac{\partial^2 q_2}{\partial M_2^2}<0$ (2)

To simplify matters and focus on essentials, demands for the two goods are assumed to be independent of one another. Good 2 is produced competitively and sells for a market price P_2, which depends only on aggregate output Q. Good 1 is a monopoly output whose price depends on the coop's own output, q_1, and on its production of q_2. As explained above, this captures a "trust" factor by which, within an initial range, increased production of q_2 <u>inside</u> the firm, irrespective of aggregate output, enhances the customers' trust in the coop and therefore their willingness to pay for good 1: it is a customers' device for evaluating the quality of q_1 output via the firm's performance in q_2 production. Beyond a certain level, however, further increase in q_2 begins to substitute for q_1 in customers' demand and therefore decreases their willingness to pay for good 1. So there must exist a positive level of q_2 at which P_1 reaches a maximum for any given level of q_1, or $\frac{\partial P_1}{\partial q_2}=0$. Inverse demand functions are thus:

$P_1 = P_1(q_1, q_2)$ with $\frac{\partial P_1}{\partial q_1}<0$; $\frac{\partial P_1}{\partial q_2}$ first >0 then <0 (3)

$P_2 = P_2(Q)$ with $\frac{\partial P_2}{\partial Q}<0$ (4)

A nonzero sign of $\frac{\partial P_1}{\partial q_2}$ then is not meant to capture demand interdependence between the two goods in the usual sense but a (positive or negative) trust relationship that holds only within the firm, not on the market. As in the standard LMF model, the cooperative seeks to maximize net income per worker, or dividend, y, which under our assumptions is total revenue from both outputs divided by total labor input:

$$y = \frac{P_1 q_1 + P_2 q_2}{M_1 + M_2} \qquad (5)$$

It should be noted that only part of this dividend is in monetary form: $P_1q_1/(M_1+M_2)$ is the expected value of per capita promises, not cash. Assuming away the members' work/leisure choice and positing fixed work hours per member, increasing M_2 (M_1) and therefore total labor input M_1+M_2, given M_1 (M_2), implies in effect hiring new members and at the same time devoting more of each member's hours to q_2 (q_1) production.

The cooperative's problem is to maximize (5) in M_1 and M_2, subject to (1) through (4). The first-order conditions for this problem yield:

$$\left(\frac{\P P_1}{\P q_1} q_1 + P_1\right)\frac{\P q_1}{\P M_1} = y \qquad (6)$$

$$\left(\frac{\P P_1}{\P q_1} q_1 + P_1\right)\frac{\P q_1}{\P M_2} + \left(\frac{\P P_1}{\P q_2} q_1 + P_2\right)\frac{\P q_2}{\P M_2} = y \qquad (7)$$

The economic interpretation of these conditions is straightforward. In each sector, the cooperative increases employment as long as doing this increases the dividend, that is, as long as the revenue from an additional unit of labor is higher than the dividend; therefore, the dividend reaches a maximum where it equals the marginal revenue product of labor in each sector. Thus the optimal employment pair (M_1^*, M_2^*) will be such as to equalize MRP's in the two sectors. The MRP's are measured by the LHS of equations (6) and (7). The interpretation of the LHS of (6) is obvious, though care must be taken that the positions of both the marginal product and the marginal revenue schedules depend on M_2 and q_2 via the trust and incentive effects. The MRP of M_2 labor in equation (7) is not just M_2's own marginal value product, $P_2 \frac{\P q_2}{\P M_2}$, but the latter augmented (or reduced) by M_2's influence on sector 1 revenue via q_1 output, $\left(\frac{\P P_1}{\P q_1} q_1 + P_1\right)\frac{\P q_1}{\P M_2}$ (the incentive factor), and via P_1 price, $\frac{\P P_1}{\P q_2} q_1 \frac{\P q_2}{\P M_2}$ (the trust factor). The algebraic sum of these augmenting factors may be positive, zero, or negative in equilibrium, that is, the MRP_2 curve may lie above, on, or below the $P_2 \frac{\P q_2}{\P M_2}$ curve, as follows from the fact that each of the effects can take on any sign at the equilibrium. Whatever the case, the equilibrium is depicted in Figure 1.

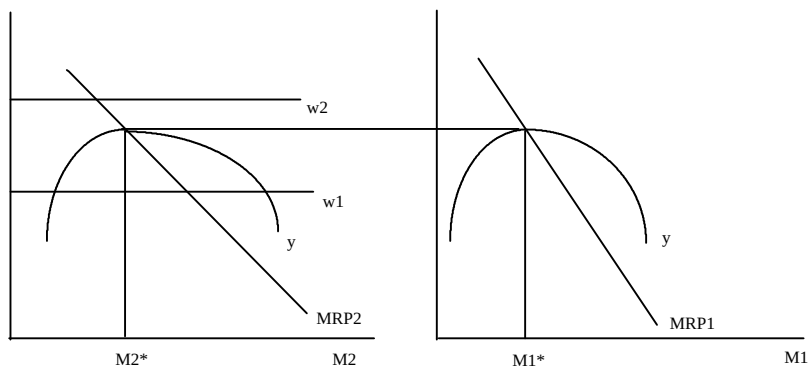

Figure 1. Cooperative equilibrium.

As we will see in the next section, the ambiguity of effects signs at the equilibrium is the root cause of the ambiguity of the coop's reactions to a change in market parameters. Obviously there is no reason why the trust and incentive effects should both be zero in equilibrium, since the level of M_2 that maximizes q_1, given M_1, will in general be different from the level of M_2 whose associated q_2 is just the one that maximizes P_1, given q_1. Thus the two effects may well have opposite signs at the equilibrium: if the trust factor is stronger the coop may find it optimal to set M_2^* such that the trust effect is still positive while the incentive effect is already in the negative range, *i.e.* $\frac{\P P_1}{\P q_2}$ >0 and $\frac{\P q_1}{\P M_2}$ <0, and viceversa if the incentive effect is stronger. But the effects may also be both positive or negative: the reason is that commercial production is formally undertaken not only because of its indirect effects on revenue from q_1 but also for its own sake, as commercial revenue enters the firm's maximand (equation (5)) on a par with political revenue. So the coop will stop at a level of M_2^* at which the positive effects of both factors are not yet exhausted if the marginal gains in the q_1 sector from a further increase in M_2 are outweighed by the marginal losses in q_2 revenue; symmetrically, both effects will be carried into their negative range if the marginal losses in q_1 revenue are outweighed by the incremental gains in the q_2 sector. In short, this means that the two effects will be positive (negative) in equilibrium if the profitability of q_2 production is relatively low (high).

As we argued in the previous section, production of good 2 per se does not require a cooperative organization as it can be undertaken by competing, nonpolitical producers employing wage labor at market rate w. Thus if for the sake of illustration, the trust and incentive effects cancel out at the optimum so that the MRP_2 curve coincides with $P_2 \frac{\P q_2}{\P M_2}$, and if the market wage is w_1 in Figure 1, then the shadow profit at M_2^* is positive, though not maximized, and a capitalist producer of q_2 could expand production until $w_1 = MRP_2$ and maximize profits. Now if the incentive problem were nonexistent and assuming that the organizational form of commercial production does not matter for consumer trust, as we argued in the previous section, then it would obviously be advantageous for the political cooperative to turn its commercial branch into a "capitalist extension" which hires wage labor and maximizes profit: coop members would specialize in political production at an unchanged dividend and share the profit from commercial production as property income. But if worker incentives are indeed a factor, as we are assuming, then a capitalist transformation of the commercial branch would entail a fall in MRP_1 and the maximum attainable y: for the organizational change still to be advantageous the <u>additional</u> profit from the switch to the profit-maximizing level of q_2 would have to be greater than the total loss of dividend for the existing M_1^* membership. In other words, although to an outsider observing only the cash portion of the members' dividend, members' labor may seem inexpensive, from the cooperative's point of view it would often be cheaper to employ hired labor at cash wage w instead of expensive members' labor at shadow price y (including also the promises portion); the cooperative, however, will be observed to produce the commercial good in-house because of the technological interdependencies with the political good. If these interdependencies are strong enough, capitalist production of q_2 will be observed only if w is very low or if q_2 production faces very weak competition (P_2 high). Oddly, but significantly, an increase in competitive market production of q_2, which lowers P_2, makes it more appealing for the coop to resort to in-house production by members' labor, further enhancing its difference from its capitalist competitors. At the opposite extreme, if the market wage is as high as w_2 (or, P_2 correspondingly low) in Figure 1, then shadow profits at M_2^* are negative, q_2 production would be loss-making at any level so that the capitalist form is not viable, yet the cooperative will

continue to support this unprofitable operation in-house because its termination would collapse revenues and dividend from political production. In this case, clearly, interdependencies in technology and demand push q_2 production beyond the levels that would be observed in a perfect-information world and without proportion to its intrinsic revenue-yielding capacity.

4. The effects of competition in the commercial sector.

It is interesting to ask how the cooperative will react to an increase in market competition for output q_2, brought about by the entry of new producers which increases aggregate output Q and lowers price P_2. Is it possible that increased competition might drive the coop into a corner in which production of one good is closed down and the coop specializes in the other output? These questions can be addressed by performing a comparative statics analysis of equilibrium conditions (6) and (7) and inquiring about the signs of the total derivatives dM_1/dQ and dM_2/dQ. Since the algebra is involved we will only report the main results of interest to the reader.

We first state some simplifying assumptions and definitions concerning the signs and magnitudes of the relevant effects at the equilibrium.

Assumptions.

(1) $\dfrac{\partial^2 q_1}{\partial M_1 \partial M_2}$ has the same sign as $\dfrac{\partial q_1}{\partial M_2}$.

(2) All demand functions are locally linear.

Definitions.

Case 0 : $\dfrac{\partial P_1}{\partial q_2} = \dfrac{\partial q_1}{\partial M_2} = \dfrac{\partial^2 q_1}{\partial M_1 \partial M_2} = 0.$

Case 1 : (a) $\dfrac{\partial P_1}{\partial q_2} > 0$; (b) $\dfrac{\partial q_1}{\partial M_2}$ 0; (c) $\dfrac{\partial q_2}{\partial M_2} - \dfrac{q_2}{M_1 + M_2}$ 0; (d) $\left|\dfrac{\partial^2 q_1}{\partial M_1 \partial M_2}\right|$ small.

Case 1' : (a), (b), and (d) as in Case 1 ; $\dfrac{\partial q_2}{\partial M_2} - \dfrac{q_2}{M_1 + M_2} > 0$ but small.

Case 2 : (a) $\dfrac{\partial P_1}{\partial q_2}$ 0; (b) $\dfrac{\partial q_1}{\partial M_2}$ 0; (c) $\dfrac{\partial q_2}{\partial M_2} - \dfrac{q_2}{M_1 + M_2}$ 0; (d) $\dfrac{\partial^2 q_1}{\partial M_1 \partial M_2}$ small.

Case P1 : (a) $\dfrac{\partial P_1}{\partial q_2} > 0$; (b) $\dfrac{\partial q_1}{\partial M_2}$ 0; (c) $\dfrac{\partial q_2}{\partial M_2} - \dfrac{q_2}{M_1 + M_2}$ 0; (d) $\dfrac{\partial q_1}{\partial M_2}$ and $\left|\dfrac{\partial P_1}{\partial q_1}\right|$ both small; (e) $\dfrac{\partial P_1}{\partial q_2}$ large.

Case P2 : (a) $\dfrac{\partial P_1}{\partial q_2}$ 0; (b) $\dfrac{\partial q_1}{\partial M_2} > 0$; (c) $\dfrac{\partial q_2}{\partial M_2} - \dfrac{q_2}{M_1 + M_2}$ 0; (d) $\dfrac{\partial q_1}{\partial M_2}$ and $\left|\dfrac{\partial P_1}{\partial q_1}\right|$ both large; (e) $\dfrac{\partial P_1}{\partial q_2}$ small; (f) $\dfrac{\partial^2 q_1}{\partial M_1 \partial M_2}$ small.

Case P3 : (a) $\dfrac{\partial P_1}{\partial q_2} > 0$; (b) $\dfrac{\partial q_1}{\partial M_2}$ 0; (c) $\dfrac{\partial q_2}{\partial M_2} - \dfrac{q_2}{M_1 + M_2} > 0$; (d) $\dfrac{\partial q_1}{\partial M_2}$ and $\left|\dfrac{\partial P_1}{\partial q_1}\right|$ both small; (e) $\dfrac{\partial P_1}{\partial q_2}$ large; (f) $\left|\dfrac{\partial^2 q_1}{\partial M_1^2}\right|$, $\left|\dfrac{\partial^2 q_1}{\partial M_2^2}\right|$, $\left|\dfrac{\partial^2 q_2}{\partial M_2^2}\right|$ all small.

Case N : (a) $\frac{\P P_1}{\P q_2} < 0$; (b) $\frac{\P q_1}{\P M_2}$ 0; (c) $\frac{\P q_2}{\P M_2} - \frac{q_2}{M_1 + M_2}$ 0; (d) $\left|\frac{\P q_1}{\P M_2}\right|$ and $\left|\frac{\P P_1}{\P q_1}\right|$ both small; (e) $\left|\frac{\P P_1}{\P q_2}\right|$ large.

Assumption 1 says that the total effect of factor M_2 on output q_1 turns from positive to negative at the same level of M_2 at which its effect on marginal product $\frac{\P q_1}{\P M_1}$ turns from positive to negative; it is a natural extension of the usual technological assumption of "cooperating" inputs to the case of an input that turns from a "good" to a "bad". Assumption 2 insures analytical tractability and is justified by the fact that there is no a priori way of imputing economically meaningful signs to the second-order partials of demand functions.

Critical for the definition of all cases are conditions (a), (b), and (c). The additional conditions that enter many of the definitions are further restrictions which help to reach definite results, as will be seen below. Conditions (a) and (b) in all cases concern the signs of the trust and incentive effects at the equilibrium: in Cases 1, 1', and 2 these effects have opposite signs (if different from zero), in all other cases they have the same signs (P as positive and N as negative). Case 0 is easily seen, using Assumption 1, to be the borderline between Cases 1 and 2. Condition (c) concerns the size of the q_2 sector in equilibrium, in the following specific sense. Given a strictly convex technology, marginal product $\frac{\P q_2}{\P M_2}$ is always lower than average product q_2/M_2 and both are decreasing in M_2, so for a given $M_1>0$, $\frac{\P q_2}{\P M_2}$ will initially be larger and then at some point become smaller than $\frac{q_2}{M_1 + M_2}$ as M_2 increases. It is in fact easy to show that $\frac{\P q_2}{\P M_2}$ = $\frac{q_2}{M_1 + M_2}$ would be the condition for an optimal level of M_2 if the coop were separately maximizing per capita income in the q_2 and q_1 sectors, $\frac{P_2 q_2}{M_1 + M_2}$ and $\frac{P_1 q_1}{M_1 + M_2}$ respectively, without taking account of the externalities between the two sectors; and this level of M_2 is invariant to changes in P_2 (due to this technology with no fixed costs). Under joint income maximization, however, the optimal M_2 will in general be different from that ensuring the above equality. Writing y = $\frac{P_1 q_1}{M_1 + M_2}$ + $\frac{P_2 q_2}{M_1 + M_2}$, equation (7) yields:

$$P_2\left(\frac{\P q_2}{\P M_2} - \frac{q_2}{M_1 + M_2}\right) = \frac{P_1 q_1}{M_1 + M_2} - \left[\left(\frac{\P P_1}{\P q_1} q_1 + P_1\right)\frac{\P q_1}{\P M_2} + \frac{\P P_1}{\P q_2} q_1 \frac{\P q_2}{\P M_2}\right] \quad (8)$$

This shows that the firm will most often set M_2 below the level that would yield separate q_2 income maximization: the LHS of (8) will be greater than zero unless the expression in square brackets on the RHS is positive and sufficiently large. This expression measures the algebraic sum of the incentive and trust effects at the equilibrium: depending on whether this sum is positive, zero, or negative, the MRP_2 curve (the LHS of (7)) will be above, equal, or below the curve $P_2 \frac{\P q_2}{\P M_2}$. Looking at Figure 2, point A is where $\frac{\P q_2}{\P M_2}$ = $\frac{q_2}{M_1 + M_2}$. Equilibrium will be to the left of A if [.] in (8) is zero (point B), negative (point C), or positive but not too large (point D). Only with curve MRP_2^3, embodying very strong

positive effects, equilibrium will be to the right of A (point E). An equilibrium to the left of A, implying $\frac{\P q_2}{\P M_2}$ > $\frac{q_2}{M_1 + M_2}$, will then certainly obtain if both $\frac{\P P_1}{\P q_2}$ and $\frac{\P q_1}{\P M_2}$ are less than or equal to zero, and may well obtain also if either or both of these effects are positive but not inordinately strong. For a point like E to be the equilibrium the monetary value of the combined effects must be larger than the per capita revenue from the q_1 sector: the q_2 sector must be very large relative to q_1.

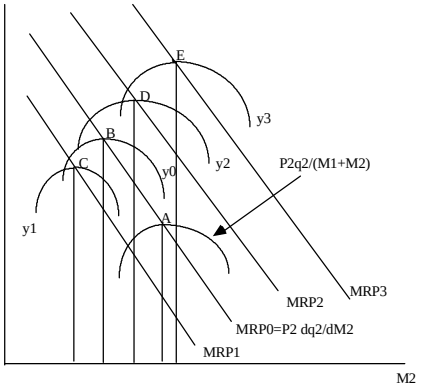

Figure 2. Equilibrium size of sector 2.

The definitions above fall short of covering the full range of possibilities: they include only the cases for which well-defined comparative statics results can be established. The boundaries between cases are set by the combination of signs of the trust and incentive effects (conditions (a) and (b)) and size of the commercial sector above or below the critical level just discussed (condition (c)). Not all such combinations yield unambiguous results: Cases 0, 1, and 2 are a benchmark in that they embody clean but specific combinations of signs; changing these combinations in the other cases requires adding in additional restrictions. As will be seen below, however, the combinations comprising the benchmark cases are likely to be the economically meaningful ones, so that our results are in effect more general than it would at first appear. With this caveat in mind we may now turn to our main results summarized in Proposition 1.

Proposition 1.

$\frac{dM_1}{dQ}$ > 0 in Cases 0, 1, 1', 2, P1, P2, N ; < 0 in Case P3.

$\frac{dM_2}{dQ}$ > 0 in Cases 1, 1', P1, P3 ; < 0 in Cases 0, 2, P2, N.

The proof is in the Appendix. Leaving aside the special case P3 for the moment, we see that $\frac{dM_1}{dQ}$ is positive in all other cases, whereas $\frac{dM_2}{dQ}$ has a negative sign in the cases in which $\frac{\P q_2}{\P M_2} - \frac{q_2}{M_1 + M_2}$ 0 and viceversa. The intuition behind our results can most easily be grasped starting from Case 0, where all trust and incentive effects happen to be just zero in equilibrium. Here it is in effect as if the coop was maximizing joint per capita revenue from two independent

outputs, so increased competition and a fall in P_2, like an exogenous tax, drives members to increase employment and output of q_1 to share the burden more widely. The outcome for the q_2 sector is driven by its size: since its trust and incentive effects are both exactly exhausted when the sector is small and contributes little to total revenue ($\frac{\P q_2}{\P M_2} - \frac{q_2}{M_1 + M_2}$ >0, see equation (8)), it is not worth the while to continue support of a less profitable production, the reaction on q_1 proves sufficient, and q_2 is scaled down.

These results carry over to certain configurations of nonzero, opposite effect signs. If the q_2 sector is so large that $\frac{\P q_2}{\P M_2} < \frac{q_2}{M_1 + M_2}$, with $\frac{\P P_1}{\P q_2}$ >0 and $\frac{\P q_1}{\P M_2}$ <0 (Case 1), <u>increasing</u> M_2 now increases P_1 in two ways: first, via q_2, through the positive trust effect which shifts the demand curve for q_1 outward, and second, via reduction in q_1, through a movement along the demand curve for q_1. Symmetrically in Case 2, when the q_2 sector is small, <u>reducing</u> M_2 as in Case 0 increases P_1 first via q_2 and the negative trust effect ($\frac{\P P_1}{\P q_2}$ <0), and second via reduction in the positive incentive effect ($\frac{\P q_1}{\P M_2}$ >0) which decreases q_1 and raises its demand price. Thus in both these cases the coop is faced with a higher MR schedule for q_1 and responds by increasing its output and employment (equation (6)): the trust and incentive effects work in the same direction and reinforce the typical cooperative response on q_1 of Case 0. In both cases the cross-productivity effect $\frac{\P^2 q_1}{\P M_1 \P M_2}$ works against the main effects just described because it implies that M_1's marginal product falls, dampening the incentive to expand M_1: hence the requirement (d) that this effect be sufficiently small in absolute value. But why does the coop react to the fall in P_2 by increasing q_2 and M_2 in the first place in Case 1, unlike Cases 0 and 2? Recall from equation (8) that for $\frac{\P q_2}{\P M_2} < \frac{q_2}{M_1 + M_2}$ to obtain the combined effects must not only be positive and large but larger than sector 1's own per capita revenue $\frac{P_1 q_1}{M_1 + M_2}$: thus shifting one unit of labor from M_1 to M_2, holding the latter denominator constant, actually increases revenue from q_1 indirectly more than it decreases it directly. In other words, here sector 2 is so large and sector 1 comparatively so small that the negative income effect from the price fall becomes so strong as to require increased employment and output in q_2 as well as q_1 to counteract it, as a coop producing mainly good 2 would do in a standard one-good model.

The combinations of signs described by Cases 1 and 2 may seem special and almost coincidental, lending little cogency to our results, but on reflection this is not the case. Why should we expect signs $\frac{\P P_1}{\P q_2}$ >0 and $\frac{\P q_1}{\P M_2}$ <0 to be associated just with a very large q_2 sector in equilibrium, as in Case 1, and the converse signs to be associated just with a small q_2 sector as in Case 2? While these combinations yield crisp comparative statics results, there is an economic logic behind them. The key to the problem is that whereas a positive trust effect directly increases the public's willingness to pay for good 1 at all levels of q_1 output, a positive incentive effect is good for q_1 production but indirectly decreases its price, the more so the less elastic is q_1's own price elasticity of demand. This basic difference makes it logical that when the expansion of q_2 is driven by a strong incentive effect, still positive beyond the point at which the trust effect turns negative, equilibrium will be reached with a small size of sector 2, as in Case 2: the unfavorable impact on P_1 from both sides puts

an early brake on the sector's expansion. As this small-scale equilibrium was reached with a price P_2 relatively high, then logically when P_2 falls the sector will be further scaled down, with the favorable effects on P_1 described above to confirm the initial move. Conversely, when the expansion of q_2 is driven by an overwhelming trust effect even if the incentive effect turns negative as in Case 1, equilibrium may only be reached at a very large size of sector 2: recall from equation (8) that for its RHS to be negative if $\frac{\P q_1}{\P M_2}$ <0, $\frac{\P P_1}{\P q_2}$ must be very large indeed; so expansion of q_2 is pulled very far by a very strong trust effect which generates a strong favorable feedback on P_1 that reinforces it. Then it becomes understandable that the income effect from a P_2 fall outweighs the substitution effect and leads to further, self-reinforcing expansion.

A better understanding of the process at work can be gained by contrasting the comparative statics of our coop with the comparative statics of a twin capitalist firm facing the same technology and market conditions (see again the comparison in Domar, 1966). If the firm maximized profit, as one would expect, $\frac{dM_2}{dQ}$ <0 in all cases, whereas $\frac{dM_1}{dQ}$ has a definite sign only in the counterpart of our Cases 0, 1, and 2 (conditions (a), (b), and (d)). In case 0 the two goods are independent at the optimum and therefore $\frac{dM_1}{dQ}$ =0; in Case 1 they behave as complements, when the various effects all work in such a way that the fall in M_2 driven by a fall in P_2 drives down P_1 and hence q_1 and M_1 ($\frac{dM_1}{dQ}$ <0); in Case 2 the goods behave as substitutes so that the fall in M_2 pushes up P_1 and hence q_1 and M_1 ($\frac{dM_1}{dQ}$ >0). In all other cases the sign of $\frac{dM_1}{dQ}$ is uncertain because the trust and incentive effects have the same sign and therefore work against one another: the fall in M_2 will entail a fall in M_1 whenever the balance of these effects drives down P_1 (*i.e.* complementarity prevails) and viceversa. Thus in Case 2 the comparative statics of the two firms is virtually identical: because the q_2 sector is small in the coop $\frac{dM_2}{dQ}$ <0 as in the profit-maximizing firm and substitutability implies that $\frac{dM_1}{dQ}$ >0 in both firms. In Case 1 however, because of complementarity, M_1 and M_2 change in the same direction in each firm, but because the q_2 sector is so large in the coop they both increase, whereas in the capitalist twin they both fall: it is the "wrong" first-order reaction on M_2 in the coop that drives the outcome.

If we depart from the neat configurations of signs of Cases 0, 1, and 2, by either assigning to both the trust and incentive effects the same nonzero sign or by reversing the sign of the difference $\frac{\P q_2}{\P M_2} - \frac{q_2}{M_1 + M_2}$, things become more messy and to get definite results we have to add in more qualifications and restrictions. The reason is that if our effects are both positive or negative in equilibrium, this helps to insure a definite sign to the above difference (see equation (8)), but then a change in M_2 in any direction as a reaction to price change will have conflicting effects on P_1. On the other hand, if with the same opposite effects signs this difference has the "wrong" sign, then the primary reaction of M_2 to the change in P_2 will have a "wrong" impact on P_1. However, reasonable restrictions on parameter values ensure that the same logic of the benchmark cases carries over to these more ambiguous cases, confirming the general pattern outlined above.

First, the positive sign of both total derivatives survive if the equilibrium effects have the same sign of Case 1 but sector 2 is only moderately large so that $\frac{\P q_2}{\P M_2} - \frac{q_2}{M_1 + M_2}$ >0 but small (*i.e.* not far from zero): this is a very real

possibility as, it will be recalled, Case 1 with $\frac{\P q_2}{\P M_2} - \frac{q_2}{M_1 + M_2}$ <0 requires a $\frac{\P P_1}{\P q_2}$ very large. Thus we get Case 1', where sector 2 is still large enough to take the lead of the typical cooperative reaction to price change, with the same results as in Case 1. Analogously, the results of Case 1 (both $\frac{dM_1}{dQ}$ and $\frac{dM_2}{dQ}$ >0) carry over to Case P1, where again sector 2 is very large so that the coop reacts to a fall in P_2 by expanding M_2, but this has conflicting effects on P_1 because the trust and incentive effects are both positive in equilibrium: the increase in M_2 directly increases P_1 via q_2 but indirectly decreases it as it increases q_1. However, since in this case the incentive effect is small ($\frac{\P q_1}{\P M_2}$ and $\left|\frac{\P P_1}{\P q_1}\right|$ are both small) relative to the trust effect $\frac{\P P_1}{\P q_2}$ (which is just what has driven the coop to a large equilibrium size of sector 2), the favorable effect on P_1 dominates and leads to expansion of sector 1 as well.

Second, the opposite signs of the total derivatives of Cases 0 and 2 ($\frac{dM_1}{dQ}$ >0, $\frac{dM_2}{dQ}$ <0) survive a positive sign of $\frac{\P P_1}{\P q_2}$ provided its size is small compared to the size of the incentive effect ($\left|\frac{\P P_1}{\P q_1}\right| \frac{\P q_1}{\P M_2}$ large). This is Case P2, where following the fall in P_2 sector 2 contracts because its initial size was small (as it was brought into being by a dominant incentive problem, as argued above), and this contraction on balance swells P_1 and hence sector 1 because the favorable incentive effect outweighs the unfavorable trust effect. Symmetrically, the same results on total derivatives carry over to the only case of negative trust and incentive effects for which we have been able to establish sufficient conditions. In Case N again sector 2 initially contracts because $\frac{\P q_2}{\P M_2} - \frac{q_2}{M_1 + M_2}$ 0 (as must be the case with both $\frac{\P P_1}{\P q_2}$ and $\frac{\P q_1}{\P M_2}$ 0, from equation (8)) and this contraction on balance pushes up P_1 because the favorable trust effect (a large $\left|\frac{\P P_1}{\P q_2}\right|$) outweighs the unfavorable incentive effect (a small $\frac{\P P_1}{\P q_1} \frac{\P q_1}{\P M_2}$).

Lastly, consider Case P3. In all cases examined so far, while M_2 may expand or contract when P_2 falls, M_1 always expands: good 1 is the "important" sector that typically bears the burden of the coop's "perverse" reaction to price change. While this reaction would necessarily obtain in a standard one-product coop, it need not obtain in a two-product coop; however, for the "atypical" result $\frac{dM_1}{dQ}$ <0 to obtain, one needs to posit a rather special set of circumstances. Essentially, in Case P3 both sectors must be "small" in the sense that own marginal labor products in each sector must be high; in addition, the technology must be such that own marginal products are concave functions (*i.e.* both $\frac{\P q_1}{\P M_1}$ and $\frac{\P q_2}{\P M_2}$ are high and fall slowly as M_1 and M_2 are increased respectively) whereas the marginal product of M_2 in q_1 production is a convex function (*i.e.* $\frac{\P q_1}{\P M_2}$ is low and falls slowly as M_2 is increased). Otherwise, like in Case P1, both trust and incentive effects are positive in equilibrium but the trust factor is large whereas the incentive factor is small. Now under

these assumptions, the first-round reaction of sector 2 to a fall in P_2 is to contract as usual since $\frac{\partial q_2}{\partial M_2} - \frac{q_2}{M_1 + M_2} > 0$. Because $\frac{\partial q_2}{\partial M_2}$ is high (which implies $\left|\frac{\partial^2 q_2}{\partial M_2^2}\right|$ small if $\frac{\partial q_2}{\partial M_2}$ is concave in M_2) a small contraction in M_2 is sufficient to produce a large fall in q_2, and since $\frac{\partial P_1}{\partial q_2}$ is also high, this entails an even larger fall in P_1. On the other hand the incentive effect works in the opposite direction, but since the fall in M_2 is small to begin with, $\frac{\partial q_1}{\partial M_2}$ is small (which implies $\left|\frac{\partial^2 q_1}{\partial M_2^2}\right|$ small if $\frac{\partial q_1}{\partial M_2}$ is convex in M_2) and $\left|\frac{\partial P_1}{\partial q_1}\right|$ is also small, the resulting positive effect on P_1 will be far too small to compensate for the downward pressure via the trust effect, so q_1 must fall. But because $\frac{\partial q_1}{\partial M_1}$ is high (which implies $\left|\frac{\partial^2 q_1}{\partial M_1^2}\right|$ small if $\frac{\partial q_1}{\partial M_1}$ is concave in M_1) this reduction in q_1 will be accomplished by a small reduction in M_1. This implies that per capita revenue from sector 1 ($\frac{P_1 q_1}{M_1 + M_2}$) falls, which reverses the calculus on sector 2: here it becomes now advantageous to react to the income fall by increasing M_2, which (given that $\frac{\partial q_2}{\partial M_2} - \frac{q_2}{M_1 + M_2} > 0$) raises per capita revenue from this sector given the new price. Hence $\frac{dM_2}{dQ} > 0$, and by implication, employment changes in both sectors will be small in absolute value. In other words, it is impossible to figure out a case in which the coop behaves "capitalistically" in both sectors, *i.e.* decreases output and employment across the board as one price falls, as this would go against the grain of per capita income maximization. In our model the "hard-core" cooperative behavior is generally entrenched in sector 1, the political good. In this particular case however, the two sectors switch roles and the coop finds it advantageous to let the already small sector 1 further contract while entrusting sector 2 with the task of expanding to better spread the burden of the price fall: here the commercial good becomes the important sector.

We are now in a position to summarize across cases and draw out the economic meaning of our findings. Basically we have three distinct scenarios. In a first scenario the political firm is faced with a big trust problem with its customers and a relatively milder incentive problem with its workers, as testified by the relative magnitude of these effects in equilibrium (whether of the same or opposite signs): this drives the coop to build up a large commercial sector. In a second scenario the political firm is faced with the opposite situation: a big incentive problem and a milder trust problem, again as testified by relative magnitudes of effects (keeping in mind that in Case N, where both effects are negative in equilibrium, this implies a larger absolute value for $\frac{\partial P_1}{\partial q_2}$): this restrains the coop from expanding the commercial sector because of its adverse effects on marginal revenue from the political sector. Of course, as mentioned in the previous section, if the coop stops short of fully exhausting the benefits of both implications of commercial production for political production (*i.e.* both effects are still positive at the equilibrium), this is because commercial production is not very profitable per se; otherwise the latter would be further expanded until at least one of the effects turns negative. Conversely, if commercial production is carried to the point of turning negative both effects on political production, this must be because it is very profitable -- although the adverse effects on the other sector will restrain the commercial sector to a small

size. Finally in a third, somewhat special scenario, the trust factor is large relative to the incentive factor but technological and market parameters are such that the coop finds its equilibrium at a small size of both sectors, so that own marginal labor products are high and slowly decreasing in both productions. Then Proposition 1 yields the following Corollary.

Corollary.

Scenario 1. Big trust problem, small incentive problem, large commercial sector (Cases 1, 1', P1): $\frac{dM_1}{dQ}>0$; $\frac{dM_2}{dQ}>0$. Increased competition increases both political and commercial production.

Scenario 2. Big incentive problem, small trust problem, small commercial sector (Cases 0, 2, P2, N): $\frac{dM_1}{dQ}>0$; $\frac{dM_2}{dQ}<0$. Increased competition increases political production and decreases commercial production.

Scenario 3. Big trust problem, small incentive problem, small size of both sectors (Case P3): $\frac{dM_1}{dQ}<0$; $\frac{dM_2}{dQ}>0$. Increased competition decreases political production and increases commercial production.

As suggested above, in no scenario is increased competition likely to decrease production in both sectors (as would be the case with complementary products in a profit-maximizing firm); of course falling incomes may drive the coop out of business because of a dwindling supply of volunteers, a possibility which lies outside the purview of our model. Scenario 1 has the firm behave as a typical coop in both sectors, because the revenue from commercial production is too important to be neglected. Under Scenarios 2 and 3 the role of reacting "cooperatively" to the price fall by increasing output and employment is left to one sector alone: usually to the political sector if the commercial sector is small and relatively unimportant, but in a particular case when also the political sector is small enough the burden of expanding under adverse market circumstances is thrown upon the commercial sector which then takes on the leading role. An interesting implication of these findings is that only under Scenario 3 could increased competition, in the limit, drive political production to extinction, leaving the coop to specialize in commercial production alone. Under Scenario 2 increased competition could eventually terminate commercial production altogether, leaving the coop to specialize in pure political production. Under Scenario 1, oddly, competition drives the coop to increase both outputs: only a reduction in competition, such as collusion or barriers to entry in the commercial good market, might here shrink both outputs and perhaps terminate political production first because it was relatively smaller to begin with. Under Scenario 2, on the other hand, a sustained reduction in competition could in the longer run reverse the relative weights of the two sectors until political production shrinks to insignificance compared to an ever-expanding commercial output. Naturally, under whatever scenario, an eventual extinction of political production would eliminate the rationale for having commercial production organized as a cooperative, and this production could, if profitable enough, be finally organized as capitalist production hiring wage labor, thus terminating the life of the cooperative as such. The following section offers a real-world illustration of these alternative outcomes.

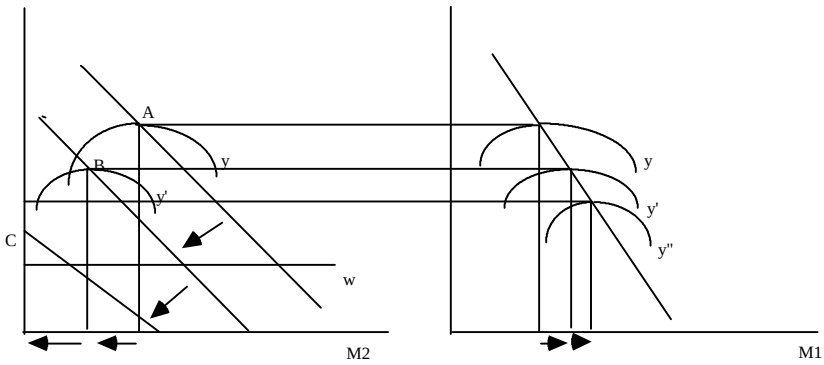

Figure 3. Effect of competition: small commercial sector.

An example of Scenario 2 is given in Figure 3, which is drawn for Case 0 for simplicity. In this case the MRP_1 curve remains fixed as M_2 changes, so starting from A, the fall in P_2 drives M_2 through B toward a corner solution C where, however, capitalist production of q_2 would still be profitable per se. Here, however, the revenue from the first unit of M_2 labor is lower than the dividend on M_1, so the cooperative discontinues commercial production and specializes in political production. If we read the diagram backwards, a sustained increase in P_2 price may expand commercial production and contract political production to the point where the latter is closed down. In any case other than Case 0 and in the other scenarios the same general pattern obtains, with the MRP_1 curve shifting in the ways described above as M_2 is changed.

5. A historical illustration: socialist revolution versus reform.

The dilemma between political and commercial production highlighted by the foregoing model is likely to confront any labor-managed organization which pursues a long-term goal promising its members a distant and uncertain, even if substantial, payoff but which here and now is pressed, in different measures, by the twofold need of providing incentives to its workers and earning the trust of its potential beneficiaries or customers. So in principle the model could be applied to a variety of organizations based on social class, property class, ethnicity, race, nationalism, gender, social reform, and even religion. We single out as an illustration the history of working-class organizations and movements, which under the flag of socialism or communism shaped so important a part of European and world history over the last couple of centuries.

As is well known, these movements were torn from the beginning by a real dilemma between revolution and reform -- as we will henceforth call the political and commercial goods respectively. "Revolution" was the attainment of the remote, hazardous, somewhat misty goal of thoroughly replacing capitalist property relations with a socialist order based on collective ownership of the means of production. "Reform" was anything that paid tangible rewards for effort and benefits for the followers here and now, including, in different degrees under different circumstances, trade union action, consumer and producer cooperatives, workers' self-help clubs, savings and loans mutuals, winning power in local governments, providing workers with basic literacy and professional training, and finally and crucially, fighting for universal franchise and then running in national elections with a view to wresting concessions from the class enemy in parliament.

There is no doubt that initially reform action enhanced the credibility of these hitherto unknown revolutionaries in the eyes of their prospective constituencies, showing the workers that these socialists were good at something and therefore their revolutionary crusade was worth following; but beyond a certain point the reforms would prove so helpful in and of themselves that they began to substitute for revolution in the workers' demand (*i.e.* the workers' "willingness to pay for revolution" would begin to decrease). At the same time, since revolutionary effort by individual party activists could easily be misdirected or undisciplined, putting them to work on more readily monitored reform tasks for some of their time would ease monitoring and therefore improve productivity on revolutionary work as well, while the pecuniary revenue from reform activities could both improve the quality of recruitment from the party's point of view (professional revolutionaries have to eat every day even if propertyless workers) and give the activists something to lose (represent a penalty) in the event of shirking or malfeasance, thus again enhancing productivity in revolutionary work. But beyond a certain point reform work would begin to prove so rewarding per se that its further expansion would now distract party members from their revolutionary commitment and lower revolutionary productivity. So both $\frac{\P P_1}{\P q_2}$ and $\frac{\P q_1}{\P M_2}$ would initially be positive and then turn negative. Finally, while revolution was a monopoly output in each country (each party had its own unique version of the total restructuring of society it was fighting for), there was at least potential competition in the market for reform: much the same kind of short-run, tangible benefits could be and often were supplied by alternative, non-revolutionary, even non-political, and even money-minded competitors. Thus the historical setting of the problem seems to fit well with the basic assumptions of our model.

By the end of the nineteenth century, after a first round of bitter infighting which marginalized various brands of utopian socialism and brushed the anarchists aside, the Marxist socialist parties across Europe were more or less agreed on a broad platform and practice that, somewhat precariously, mixed revolution and reform. Then as the new century unfolded they parted company, often dramatically. One group, led by the Russian Bolsheviks and later followed by the Chinese and Vietnamese communists, clang to revolution first and achieved it. A second group of parties, broadly

spanning Northern Europe (Britain, the Scandinavian countries, Germany, and Austria) gradually postponed and downsized revolutionary action, eventually discarded it altogether, and turned into modern social-democracy bent on reform and electoral politics, without losing any substantial constituency to their left. In a third group of countries of Southern Europe, such as Italy, France, Portugal and Spain, the original workers' party split into a reformist (socialist) and a revolutionary (communist) wing, and the communist wing kept on for the next half-century furthering both reform action and revolutionary ideology, which made for strange bedfellows after a while. A fourth, more heterogeneous group includes the anarchists, anarco-syndicalists, and communist utopians of Europe and America, plus the sundry Marxist guerrilla movements of Latin America, which went their own radical, revolutionary way alone, sometimes fading out of the scene, sometimes holding on in a corner, sometimes yielding to reform action somehow or other. Standard histories of socialism (see for example Landauer, 1959) appeal to different ideological evolution and the hard test of reality in different political environments to account for these divergent developments. By contrast, we will now try to show in a nutshell that the broad pattern of events can be explained by the different impact of market competition under different sets of technological and demand parameters, provided only that the starting hypothesis of a two-product, income-maximizing cooperative is accepted as a fair description of the working of a socialist or communist party in a capitalist society.

The key to our explanation turns around the relative weight of the trust versus the incentive factors as well as the degree of competition in the reform market in the relevant period. The importance of the monitoring or incentive problem depends on how different the tasks of revolutionary work are from the tasks of reform work, and thus partly on the nature of the revolution that is being pursued. The importance of the trust problem grows directly with the width of scope and heterogeneity of the public targeted as revolutionary constituency, and is further enhanced by competition on the reform market because the beneficiaries are faced with competing demands for trust by alternative providers: so other things equal, the stronger the competition the more acute the credibility problem for the revolutionary party. The degree of competition for reforms is partly exogenous and partly a product of the splits that may beset the original party under pressure. Finally, it must be emphasized that the focus here is exclusively on the organization's production decisions in the revolution and reform fields; whether a revolutionary effort actually succeeds or fails depends on a host of circumstances that lie beyond the model's reach.

Successful revolutionaries fall into two categories. One has the Russian Bolsheviks as a prototype. An urban, working-class party, they were selling their revolution to a proximate, relatively homogeneous industrial constituency, so customers' trust was a relatively minor problem. Worker incentives, however, were a big problem due to the demanding nature of revolutionary Marxist action in a backward, authoritarian country like Russia; as a consequence, the Bolsheviks built up a reform sector but kept it on a small scale: Lenin was always keen to insist that reform should not be allowed to hinder or corrupt the ultimate purpose of the party. We are thus fully in the setting of Scenario 2. As World War I drew closer, competition on the reform market escalated on the part of the more moderate socialists or populists, typically based on middle-class or agrarian constituencies, until they took over the government in February 1917, and as our model would predict, the Bolsheviks reacted by further distancing themselves from the competition, curtailing their own reform activity to negligible proportions, radicalizing their stance and almost exclusively specializing in revolution. When they conquered power in October 1917, they were then solidly rooted in the small urban working class but completely estranged from the peasantry, a fact whose long-lasting consequences are on the historical record.

By contrast, the Chinese and Vietnamese communists, after some disastrous beginnings with the minuscule urban proletariat, soon turned to the countryside and targeted the overwhelming majority of the population, the peasantry, as their customers. This constituency, being very heterogeneous in itself, politically conservative, and as remote as anything from urban, educated, middle-class revolutionaries, posed a very substantial credibility problem to the communists, one that overshadowed the incentive problem which was somewhat eased by the single, all-important priority of fighting

occupation by a foreign imperial power. So they built up a very large "reform" sector, providing *quid-pro-quo* benefits to the peasantry in exchange for support in the revolutionary struggle: the liberated areas. This is clearly a Scenario 1 setting. Mutual aid, literacy, sanitation, easy credit, and other tangible benefits were also offered to the peasants by a very active competition: the Kuomingtang in China where it held control, and a variety of non-communist, populist, anti-imperialist organizations in Vietnam (see Johnson, 1962, and Popkin, 1979). So the communists predictably responded by further expanding both revolution and reform, finally achieving power with a relatively broad base of consensus among the peasantry, in sharp contrast with the Russians.

In a different national and international environment, our Scenario 1 provides the setting also for the peculiar development of South European communism. Here too retarded industrialization implied that a broad, heterogeneous constituency had to be targeted for revolutionary propaganda and mobilization, ranging from factory workers to farm laborers. On the other hand, competition for social reform was stiff from the beginning: the survivors of pre-Marxian socalism, especially anarchists and anarco-syndicalists continued to be active and influential; the so-called "bourgeois radicalism" played a role in some places; and above all, the Roman Catholic social movements and organizations were well entrenched and difficult to displace. For both these reasons, the credibility problem for the socialists was overwhelming and led them to build up a very large reform sector, including for example a sector of consumer and producer cooperatives on a scale unknown to Northern Europe. The strains produced by this doubling of roles resulted in a schism between a revolutionary wing (communists) and a reformist wing (socialists), which itself further increased competitive pressure on the revolutionaries. Then soon after the schism, a new formidable competitor appeared: fascism, which starting from a completely opposite ideology offered much the same provisions to the working people and attracted some significant following from the socialist ranks (Mussolini began his career as a revolutionary socialist). So as our model suggests, the French and Italian communist parties emerged from World War II (and the Spanish and Portuguese parties emerged from the later collapse of the fascist regimes) with a large and expanding reform sector. However, in contrast to the successful revolutions of China and Vietnam, here the international balance of powers dictated that no communist party could be allowed to take over a government in Western Europe. Therefore, competition from all quarters drove the communists to keep expanding reform activity while at the same time upholding and fostering revolutionary propaganda with no apparent purpose -- two products whose mutual incompatibility became increasingly obvious, witness the progressive watering of the revolutionary ideology and the steady fall in the productivity of revolutionary work. By this time, however, the revolutionary label was essential to differentiate their own reforms from the competition's and so to ensure a continuing market share for their political firm.

The comparative statics of our model then offers a clue to the paradox of a nominally revolutionary organization which spends most of its time in reform activities over several decades. While the other South European communists still seem to be struggling with the paradox, the Italian communists in the early Nineties have finally laid the revolution to rest by conspicuously changing name and platform to their party (leaving, however, a nonnegligible number of hard-liners to form an ostensibly communist splinter party to the left, which promises to repeat the same story all over again in the small). Scenario 1 of our model can accommodate this outcome as well if only we press the "rewind" button on the competition parameter. Elsewhere (Ferrero and Brosio, 1997) we offered a formal model of the post-war Italian political system in which the exclusion of the communists from access to national government drove the other parties to offer them, and the communists to accept, a share in power (and the rents thereof) at all levels except the national government, making them from the 1960's on into a *de facto* junior partner of the ruling coalition: from labor unions to occupational and professional associations, from local governments to the judiciary, from pension funds to interregional income transfers, everything was divided up *pro quota* among the parties, communists included, thereby replacing rivalry and conflict with collusion and bargaining. At the end of the line, this process made revolution dispensable as a brand name and the

erstwhile communists turned wholesale to reform, or "commercial" political action. In the language of our model, under Scenario 1 a steady fall in competition drives down both revolution and reform outputs, but starting from a very extensive reform sector and a tiny, low-tuned revolution sector, the latter will shrink more drastically and sooner or later be discontinued.

We have seen above that Scenario 2 can accommodate the Bolshevik case; in a different environment, the same scenario yields the social-democratic outcome. In the industrialized countries of Northern Europe, socialist propaganda was from the beginning concentrated on the sizable industrial working class, as in Russia, posing no insurmountable credibility problems. In addition, the socialists here did not have to face anything like the competition confronting their counterparts in Southern Europe: the anarchists were a negligible influence and no substantial challenge was posed by a Christian social reform movement. For both these reasons, the trust factor was not as important as it was in Southern Europe or East Asia. On the other hand, for much the same reasons as in Russia, the incentive problem was initially a major factor for the German and Scandinavian socialists, whose long-term revolutionary perspective was so far apart from the everyday concerns of the working people. It might seem that the British situation was different on account of the intimate relationship between the Labour Party and the trade unions, reducing the distance of reform work from revolutionary activity, but on reflection this intimacy had the opposite effect. The British Labour Party was until recently "owned" by the Trade Union Congress almost as literally as any political organization can be owned by third parties, and the better defined ownership rights are, the more salient the agency relationship between owners and managers and therefore the more acute the monitoring and incentive problems of the principal (the unions) *vis-à-vis* the agent (the party). As a consequence, in these countries the reform sector was built mainly on incentive needs and therefore was initially kept relatively small, essentially comprising the unions and related mutual-aid agencies but not a worker cooperatives' sector. The following decades saw no new competitors entering the British and Scandinavian reform stages: the parties held together and the communist schisms were ininfluential, while fascism never rose to more than negligible proportions; on the contrary, the socialist parties were able to establish a near-monopoly of reform action on behalf of the working class. The German and Austrian socialists, on the other hand, did confront internecine splits and the dramatic challenge of Nazism in the interwar period, but this competition sank with the catastrophe of World War II: the German communists took over East Germany on the wake of the Soviet Red Army and Nazism disqualified itself as a social reformer as South European fascism never did, bequeathing to the social-democrats of West Germany and Austria an effective monopoly of working-class reform politics. Therefore as our model predicts, a sustained long-run decrease in competition in these conditions led to a steady expansion of the reform sector and a contraction of revolution to the point where first the Swedes, then all the others in succession disavowed it altogether. The original revolutionary cooperative was liquidated and the reformist party took on a life of its own: playing the periodic electoral game with its attendant, tangible costs and rewards for both customers and workers, it had no reason further to stick to the old cooperative form and could evolve towards an ordinary Western-style, more short-sighted, "capitalist" (or rent-seeking) political firm.

Lastly, somewhere between the limit Case 0 of Scenario 2 and Scenario 3 lie the homes of the revolutionary failures, ranging from the utopianists trough the anarchists to the Marxist guerrillas of the Third World. What all these characters have in common from the standpoint of our model is that the monitoring-incentive problem is practically nonexistent: for the utopian socialists because of their self-selection into voluntary communities, for the anarchists and anarco-syndicalists because collective action is almost totally unorganized and whatever spontaneous act of revolt an individual or a worker group undertakes is good for revolution by their ideology's definition, and for the guerrillas because of the loose, uncoordinated nature of their warfare operations. Then a difference arises according to whether they sell their revolution to themselves, so to speak, or try to target a wider audience. In the former case the trust problem also will be next to nonexistent, a reform sector will consequentlly be very small at any time if it exists at all, and we are in a trivial variant of

Case 0, Scenario 2: both factors are close to zero not just in equilibrium but by assumption, and outside competition kills any potential reform activity in its cradle and leaves the revolutionaries alone to cultivate their exclusive revolution, almost unconcerned with political developments around them. This scenario seems to capture the extraordinary endurance of utopians, anarchists, and some guerrilla groups in the face of a totally hopeless political environment and their unwillingness or inability to yield to reality, opting rather for survival in a corner, and making more or less of a nuisance to the rest of society depending on whether they were relatively numerous and concentrated (as the Spanish anarchists in the 1930s or some guerrilla groups today) or few and scattered (as for example the utopian communities in the Americas). If, on the other hand, an infant revolutionary movement, still very small in both sectors, purports to target a broader, heterogeneous constituency, then it will at once have to face a big customer trust problem before having equipped itself with an organization large enough to adequately deal with it. This case falls into the setting of Scenario 3: here an increase in competition for reform from nonrevolutionary suppliers will tend to drive the revolution out of business and leave the erstwhile revolutionaries to specialize in reform production, which will, however, be a commercial failure because it is driven by worsening, not improving, market prospects and falling price. This scenario captures the only case in our model in which active reform action by democratic suppliers, starting early on before the communists have taken roots, may have a chance of nipping a Marxist revolution in the bud. Otherwise, as we have seen, increased competition for reform always fosters revolution, which is the paradox that our cooperative model of a political firm was designed to explain.

6. Empirical implications and conclusions.

This section concludes our analysis by summarizing a number of implications that are derived from the foregoing model and that appear to be supported by empirical observation. We have argued that a political organization engaged in the long-term operation of selling promises is driven to take the form of a producer cooperative of sorts, which supports its production of a political good with the production of a commercial good and maximizes joint per capita revenue from both outputs. The logic of a two-product cooperative firm and its reaction to market competition for the commercial good yield a bird-eye explanation for the behavioral puzzles we set forth in the Introduction to motivate this research, as follows.

(1) The observed high degree of concentration in the political industry is explained by the tendency to merger that arises out of the inefficiency of a cooperative market equilibrium.

(2) The fact that ownership rights in political firms may not be traded in the market is explained by the need to preserve worker ownership in the cooperative.

(3) The enormous rewards that access to state power bestows on political organizations (think of successful revolutions!) are simply the premium that compensates for the politicians' abstention from current consumption enforced by the rational follower-customer as a protection against deception. The lifelong revolutionary posts a bond whose capitalized expected value will be recouped only in the event of success, which rules out "flying by night" and cheating the customers.

(4) The political organization's undertaking of commercial production on the side, often carried beyond a profitable level, is explained by the twin needs of monitoring workers in a type of production in which effort is easily observable and the reward is in cash form and of giving customers something tangible and building trust well before the day when the ultimate delivery on the political promise will come. The puzzling practice of organizations in which everybody does a little bit of everything at least for some time, which seems to run counter to the wisdom of specialization and division of labor, is likewise explained by the observation that everyone, not just someone, has to be monitored and rewarded for effort and that this must be visible to the customers. If only joint customers' demand, and not the potential for worker shirking, were the problem, we would observe a division of labor that assigns and specializes some of the firm's personnel to each production department.

(5) The effects of competition in the commercial good market are complex and were the subject of the comparative statics analysis of section 4. It turned out that only if early, strong competition hits a political cooperative which is still small in both sectors can it be driven to discontinue political production altogether and specialize in the commercial production. Otherwise, increased competition will always drive the firm to increase political production, while its commercial production will or will not follow suit depending on whether the commercial sector is large or small in equilibrium; this in turn depends on whether the consumer trust factor did or did not take priority over the worker incentive factor in bringing the commercial sector into being in the first place. In the latter case, in the limit, commercial production may even be terminated, leaving the coop to specialize exclusively in political production. On the other hand, political production will shrink and may eventually be closed down as a consequence of a sustained reduction in competition and increase in price for the commercial good, in which case the original rationale for the cooperative form of organization disappears and we are likely to observe a mutation of the former coop into a more nearly normal business firm. This diversified pattern of market behavior could never be observed if the political firm were a profit-maximizing concern but is entirely due to the logic of a producer cooperative. These results were applied in section 5 to the case of the revolution versus reform dilemma in the evolution of socialist movements and proved capable of accounting for the broad features of observed historical developments.

(6) Lastly, the political firm's propensity to redefine its promises and dramatically change its policy package when it conquers state power (especially if unconstrained by periodic elections), as illustrated by the well-documented radicalization of successful revolutions, may be explained as a device by which the firm drives some of its members to quit "voluntarily", leaving the remaining members with a higher income. This is a consequence of a cooperative's tendency to curtail its membership in response to an increase in revenue, which gives rise to an internal conflict that is solved by turning to more extreme policies, in contrast to the behavior that one would expect of a capitalist firm. This implication is developed at length, and tested against a broad range of historical evidence, in a separate paper (Ferrero 1998).

Needless to say, adequate empirical testing of these implications of our model is the demanding task of future research.

Appendix.

By totally differentiating equations (6) and (7) in the text with respect to M_1, M_2, and Q one obtains the following total derivatives:

$$\frac{dM_1}{dQ} = \frac{\frac{\partial P_2}{\partial Q}\left[\frac{\partial^2 y}{\partial M_1 \partial M_2}\left(\frac{\partial q_2}{\partial M_2} - \frac{q_2}{M_1 + M_2}\right) + \frac{q_2}{M_1 + M_2}\frac{\partial^2 y}{\partial M_2^2}\right]}{\frac{\partial^2 y}{\partial M_1^2}\frac{\partial^2 y}{\partial M_2^2} - \left(\frac{\partial^2 y}{\partial M_1 \partial M_2}\right)^2} \qquad \text{(A1)}$$

$$\frac{dM_2}{dQ} = \frac{-\frac{\partial P_2}{\partial Q}\left[\frac{\partial^2 y}{\partial M_1^2}\left(\frac{\partial q_2}{\partial M_2} - \frac{q_2}{M_1 + M_2}\right) + \frac{q_2}{M_1 + M_2}\frac{\partial^2 y}{\partial M_1 \partial M_2}\right]}{\frac{\partial^2 y}{\partial M_1^2}\frac{\partial^2 y}{\partial M_2^2} - \left(\frac{\partial^2 y}{\partial M_1 \partial M_2}\right)^2} \qquad \text{(A2)}$$

The denominators of these expressions are the same and are the Hessian determinant of the second-order conditions for a maximum, so they must be greater than zero. In both numerators $\frac{\partial P_2}{\partial Q}$ <0 by assumption, so the sign of the total derivatives depends on the sign of the expressions in square brackets in the numerators. These contain the second-order partial derivatives of the objective function (5), which are as follows:

$$\frac{\partial^2 y}{\partial M_1^2} = 2\frac{\partial P_1}{\partial q_1}\left(\frac{\partial q_1}{\partial M_1}\right)^2 + \left(\frac{\partial P_1}{\partial q_1}q_1 + P_1\right)\frac{\partial^2 q_1}{\partial M_1^2} \qquad \text{(A3)}$$

$$\frac{\partial^2 y}{\partial M_2^2} = 2\frac{\partial q_1}{\partial M_2}\left(\frac{\partial P_1}{\partial q_1}\frac{\partial q_1}{\partial M_2} + \frac{\partial P_1}{\partial q_2}\frac{\partial q_2}{\partial M_2}\right) + \left(\frac{\partial P_1}{\partial q_1}q_1 + P_1\right)\frac{\partial^2 q_1}{\partial M_2^2} + \left(\frac{\partial P_1}{\partial q_2}q_1 + P_2\right)\frac{\partial^2 q_2}{\partial M_2^2} \qquad \text{(A4)}$$

$$\frac{\partial^2 y}{\partial M_1 \partial M_2} = \left(2\frac{\partial P_1}{\partial q_1}\frac{\partial q_1}{\partial M_2} + \frac{\partial P_1}{\partial q_2}\frac{\partial q_2}{\partial M_2}\right)\frac{\partial q_1}{\partial M_1} + \left(\frac{\partial P_1}{\partial q_1}q_1 + P_1\right)\frac{\partial^2 q_1}{\partial M_1 \partial M_2} \qquad \text{(A5)}$$

By the second-order conditions, (A3) and (A4) must be negative to insure a maximum, while the sign of (A5) is ambiguous. To prove Proposition 1, one has to apply to (A1) and (A2) the specific combination of signs that defines each case. It turns out that sufficient conditions for $\frac{dM_1}{dQ}$ >0 and $\frac{dM_2}{dQ}$ <0 are $\frac{\partial q_2}{\partial M_2} - \frac{q_2}{M_1 + M_2}$ 0 and $\frac{\partial^2 y}{\partial M_1 \partial M_2}$ 0, and that these conditions are satisfied by the specific signs and magnitudes assumed in Cases 0, 2, P2, and N. Analogously, a sufficient condition for $\frac{dM_1}{dQ}$ >0 and $\frac{dM_2}{dQ}$ >0 is $\frac{\partial^2 y}{\partial M_1 \partial M_2}$ >0 with $\frac{\partial q_2}{\partial M_2} - \frac{q_2}{M_1 + M_2}$ 0 or >0 but small, and these conditions are satisfied by the signs and magnitudes assumed in Cases 1, 1', and P1. Finally, to get Case P3 simple inspection of (A1) and (A2) does not suffice and one has to explicitly develop the square-bracketed expressions in the numerators using (A3), (A4), and (A5).

References

- BECKER, G. (1983), “A theory of competition among pressure groups for political influence”, Quarterly Journal of Economics, 98, 371-399.
- BEN-NER, A. (1984), “On the stability of the cooperative type of organization”, Journal of Comparative Economics, 8, 247-260.
- BONIN, J. and L. PUTTERMAN (1987), Economics of cooperation and the labor-managed economy, New York.
- BRETON, A. and R. WINTROBE (1992), “Freedom of speech vs. efficient regulation in markets for ideas”, Journal of Economic Behavior and Organization, 17, 217-239.
- CALVO, G. (1985), “The inefficiency of unemployment: The supervision perspective”, Quarterly Journal of Economics, 100, 373-387.
- CARMICHAEL, L. (1989), “Self-enforcing contracts, shirking, and life cycle incentives”, Journal of Economic Perspectives, 3, 65-83.
- CUGNO, F. and M. FERRERO (1984), “Fusioni di imprese ed efficienza nei modelli di economie autogestite: un commento a Nuti”, Rivista Internazionale di Scienze Sociali, 92, 261-274.
- CUGNO, F. and M. FERRERO (1985), “Fusioni di imprese autogestite: ancora una replica a Nuti”, Rivista Internazionale di Scienze Sociali, 93, 114-121.
- DOMAR, E. (1966), “The Soviet collective farm as a producer cooperative”, American Economic Review, 56, 734-757.
- EASLEY, D. and M. O'HARA (1983), “The economic role of nonprofit firms”, Bell Journal of Economics, 14, 531-538.
- FERRERO, M. (1995), “The economics of socialist nationalism: Evidence and theory”, in A. Breton et al., eds., Nationalism and rationality, Cambridge University Press, Cambridge.
- FERRERO, M. (1998), “The political enterprise and the choice of extremist policies”, mimeo, Department of Economics, University of Turin.
- FERRERO, M. (1999), “Political exchange in one-party states and the transition from socialism”, mimeo, POLIS, University of Eastern Piedmont.
- FERRERO, M. and G. BROSIO (1997), “Nomenklatura rule under democracy: Solving the Italian political puzzle”, Journal of Theoretical Politics, 9, 445-475.
- HANSMANN, H. (1980), “The role of nonprofit enterprise”, Yale Law Journal, 89, 835-898.
- IRELAND, N. and P. LAW (1982), The economics of labor-managed enterprises, St. Martin Press, New York.
- JAMES, E. (1983), “How nonprofits grow: a model”, Journal of Policy Analysis and Management, 2, 350-365.
- JAMES, E. and E. NEUBERGER (1981), “The University department as a nonprofit labor cooperative”, Public Choice, 36, 585-612.
- JOHNSON, C. A. (1962), Peasant nationalism and communist power: The emergence of revolutionary China, 1937-1945, Stanford University Press, Stanford.
- LANDAUER, C. (1959), European socialism. A history of ideas and movements, University of California Press, Berkeley.
- MENCHIK, P. and B. WEISBROD (1987), “Volunteer labor supply”, Journal of Public Economics, 32, 159-183.
- NUTI, D. M. (1983), “Fusioni di imprese ed efficienza nei modelli di economie autogestite”, Rivista Internazionale di Scienze Sociali, 91, no. 4.

- NUTI, D. M. (1985a), “Fusioni di imprese autogestite: una risposta”, Rivista Internazionale di Scienze Sociali, 93, 107-113.
- NUTI, D. M. (1985b), “Mergers and disequilibrium in labour-managed economies”, Jahrbuch der Wirtschaft Osteuropas, 11, 73-90.
- OLSON, M. (1965), The logic of collective action, Harvard University Press, Cambridge (Mass.).
- POPKIN, S. L. (1979), The rational peasant: The political economy of rural society in Vietnam, University of California Press, Berkeley.
- SHAPIRO, C. and J. STIGLITZ (1984), “Equilibrium unemployment as a worker discipline device”, American Economic Review, 74, 433-444.