View metadata, citation and similar papers at core.ac.uk
brought to you by CORE
provided by NASA Technical Reports Server

(NASA-TM-X-71592) EFFECTS OF EQUIVALENCE RATIO AND DWELL TIME ON EXHAUST EMISSIONS FROM AN EXPERIMENTAL PREMIXING PREVAPORIZING BURNER (NASA) 23 p HC $3.00 CSCL 21E G3/33
N74-32369
Unclas
46455

NASA TECHNICAL MEMORANDUM

NASA TM X-71592

NASA TM X-71592

EFFECTS OF EQUIVALENCE RATIO AND DWELL TIME ON EXHAUST EMISSIONS FROM AN EXPERIMENTAL PREMIXING PREVAPORIZING BURNER

by David Anderson
Lewis Research Center
Cleveland, Ohio 44135

TECHNICAL PAPER proposed for presentation at
Twentieth Annual International Gas Turbine
Conference sponsored by the American Society
of Mechanical Engineers
Houston, Texas, March 2-6, 1975

ABSTRACT

A flame-tube study was performed to determine the effects of equivalence ratio and residence time on exhaust emissions with premixed, prevaporized propane fuel.

Nitrogen oxides emissions as low as .3 g NO_2/kg fuel were measured with greater than 99% combustion efficiency at 800 K inlet temperature and an equivalence ratio of .4.

For a constant combustion efficiency, lower nitrogen oxides emissions were obtained by burning very lean with relatively long residence times than by using somewhat higher equivalence ratios with shorter times.

EFFECTS OF EQUIVALENCE RATIO AND DWELL TIME ON EXHAUST EMISSIONS FROM AN EXPERIMENTAL PREMIXING, PREVAPORIZING BURNER

by David Anderson
NASA - Lewis Research Center
Cleveland, Ohio

SUMMARY

Emissions from a 10-cm diameter flame tube burning premixed, prevaporized propane fuel were measured to determine the lower limits of nitrogen oxides (NO_x) formation and the effects of residence time and equivalence ratio on pollutant emissions. Inlet conditions included temperatures of 600 and 800 K, a pressure of 5.5 atm, and reference velocities of 25 and 30 m/s. Residence times were varied from 1 to 3 msec. Concentrations of nitric oxide (NO), total nitrogen oxides ($NO + NO_2$), carbon monoxide, carbon dioxide and unburned hydrocarbons were measured for a range of equivalence ratios from lean blowout to slightly richer than stoichiometric.

NO_x emissions as low as .3 g NO_2/kg fuel were measured with an inlet temperature of 800 K at an equivalence ratio of .4. Blowout occurred for leaner equivalence ratios. With 600 K inlet temperature it was necessary to burn with equivalence ratios richer than .54 to maintain stable burning. At this temperature, the NO_x emission index was about 1 g NO_2/kg fuel at an equivalence ratio of .54.

Comparison of measured NO_x emissions at 2 msec dwell time with those predicted by a well-stirred-reactor computer model showed excellent agreement for equivalence ratios lower than .75. For higher equivalence ratios the model predicted higher NO_x than was measured.

For the same combustion efficiency lower NO_x was obtained by burning very lean with relatively long residence times than by using somewhat higher equivalence ratios with shorter times.

INTRODUCTION

A flame tube burning premixed, prevaporized propane was used to determine the effects of residence time and equivalence ratio on pollutant emissions and to establish what minimum levels of nitrogen oxides (NO_x) emissions could be expected with a completely uniform fuel-air mixture.

The rate of NO_x formation increases exponentially with local flame temperature; thus, the high temperatures and long residence times which are favorable to good combustion efficiency in a gas turbine combustor also tend to produce high NO_x emissions. Several experimental studies have looked at methods of reducing the local flame temperature without sacrificing combustion efficiency.

One approach is to prevaporize the fuel. In conventional combustors liquid fuel is sprayed into the primary zone to burn near the stoichiometric fuel-air ratio. Even if the mean primary zone equivalence ratio is reduced, non-uniformities in fuel-air ratio and droplet burning can produce local temperatures in excess of the mean.

Droplet burning can be eliminated by the use of a prevaporized fuel. Norgren and Ingebo (refs. 1 and 2) have conducted tests with an experimental combustor in which a vapor fuel was substituted for liquid fuel without attempting to improve fuel-air mixing. Compared with liquid fuel, the vapor fuel gave a 20% reduction in NO_x emissions at an inlet temperature of 700 K and pressure of 10 atm.

Another way to reduce local flame temperature is to improve the fuel-air mixing while using lean mixtures. Heywood and associates (refs. 3, 4, and 5) have demonstrated the significance of fuel-air uniformity on nitric oxide production. Figure 1 (taken from ref. 5) shows their analytical prediction of the effect of burning-zone uniformity. It is apparent from this prediction that improved mixing might result in orders-of-magnitude reduction in NO formation rates for equivalence ratios on the order of .6 or less.

This potential for low NO_x from a uniform mixture has resulted in several experimental studies in which the fuel-air mixing was improved to produce a more nearly uniform combustion zone. Appleton and Heywood (ref. 5) increased fuel atomizing pressure to improve fuel-air mixing and were able to show an order-of-magnitude reduction in NO_x emissions at an equivalence ratio of .62. Ingebo and Norgren (ref. 6) measured about 30% less NO_x when fuel atomization was improved by increasing the nozzle atomizing pressure from 10 to 20 atm. Both studies used liquid fuels.

By prevaporizing the fuel and premixing fuel and air it should be possible to obtain a completely uniform mixture. Pompei and Gerstmann (ref. 7) and Ferri and Roffe (ref. 8) have been measuring emissions in premixed, prevaporized burners. Pompei and Gerstmann tested their burner both with propane, to avoid vaporization problems, and with prevaporized liquid fuel. Their results showed the strong effect of air/fuel ratio on NO_x emissions that would be expected from burning a uniform mixture. They found a slightly non-linear effect of residence time on NO_x emissions.

Roffe's program (unpublished data obtained under NASA Contract NAS-317865) has used a pre-burner upstream of the test section to produce a temperature of about 900 K for liquid fuel (JP5) vaporization at 4 atm pres-

sure. Again, the very strong effect of equivalence ratio on NO_x emissions was demonstrated. Values on the order of 1 g NO_2/kg fuel at equivalence ratios of about .5 were obtained for residence times of about 4 msec.

In preliminary experiments at the Lewis Research Center the effect of premixing and prevaporizing was studied in a flame-tube apparatus (ref. 9). Inlet temperature was 590 K, pressure was 5.5 atm and residence time about 5 msec. Propane, used to simulate a prevaporized jet fuel, was injected far enough upstream of the burner to insure thorough mixing of fuel and air. Nitric oxide emissions as low as .8 g NO_2/kg fuel were measured with combustion efficiency greater than 99% at an equivalence ratio of .54. However, for leaner equivalence ratios the flame became unstable and lean blowout occured at an equivalence ratio of .5.

The experiments reported here used basically the same apparatus as the program of reference 9. The purpose was to extend the operating conditions of reference 9 to a higher inlet temperature as well as to study the effect of residence time on NO_x emissions and combustion efficiency. Inlet conditions covered were fuel-air mixture temperatures of 600 and 800 K, a pressure of 5.5 atm, and reference velocities of 25 and 30 m/s. The gas sampling probe was traversed axially to positions of 5, 10, 20, and 30 cm from the flameholder. Concentrations of nitric oxide (NO), total NO_x ($NO + NO_2$), carbon monoxide, carbon dioxide, and unburned hydrocarbons were measured for a range of equivalence ratios from lean blowout to slightly richer than stoichiometric

A well-stirred-reactor computer model was used to predict NO_x emissions for a dwell time of 2 msec at the experimental test conditions.

APPARATUS AND PROCEDURE

Details of the apparatus are given in figure 2. Air entering the test section was indirectly preheated for all tests. Gaseous propane fuel was introduced through a fuel tube located 2.6 m upstream of the flameholder to allow sufficient time for thorough mixing of fuel and air. A small swirler was located on the end of the fuel tube to give some initial mixing.

The flameholder was made by welding 61 tubes of .6 cm inside diameter between two .6 cm thick stainless steel plates as shown in figure 3. This arrangement resulted in an open area of 25 percent of the inlet duct cross-sectional area. The total pressure drop across the burner ranged from 2 to 6 percent of the upstream total pressure, depending on inlet conditions.

It was necessary to water-cool this flameholder to prevent burnout at 800 K inlet mixture temperature when running with equivalence ratios near unity.

The water-cooled burner was 10.25 cm in diameter, the same as the inlet duct, and 31 cm long (see fig. 2). At the downstream end quench water was sprayed into the gas stream to cool the exhaust to about 370 K. This mixture of combustion products and water passed through a remotely operated back-pressure valve for control of rig pressure.

Rakes for inlet instrumentation were avoided to eliminate any possible flameholders in the inlet duct. Instead, static pressure was measured at the wall 8.9 cm upstream of the flameholder and a single Chromel-Alumel thermocouple was inserted to a depth of about 2 cm into the flow at a location 12.7 cm upstream of the flameholder. Downstream static pressure was measured at a tap 43 cm downstream of the flameholder. ASME standard orifices were used to measure air and fuel flows.

Details of the water-cooled stainless-steel gas-sampling probe are also shown in figure 2. The single-point probe was .635 cm outside diameter with a center sampling tube of .159 cm diameter. The probe could be traversed axially along the burner center line.

Stainless steel tubing of .95 cm diameter connected the gas sample probe with the exhaust gas analyzers. To prevent condensation of unburned hydrocarbons this sample line tubing was electrically heated to maintain the sample gas temperature between 410 K and 450 K. The sample line was approximately 18 m long.

Gas analysis equipment included a Model 402 Beckman Flame Ionization Detector for measuring unburned hydrocarbons, Model 315B Beckman nondispersive infrared analyzers for measuring concentrations of carbon monoxide and carbon dioxide, and a Model 10A Thermo-Electron Chemiluminescent instrument for nitric oxide and total NO_x concentration.

Calibration of the instruments with standard calibration gases was performed at the beginning of each day's testing and whenever a range change was made.

Inlet air humidity was measured with an EG & G Model 137 Vapor Mate II humidity meter with a Model S3 sensor. Although measurements of CO, CO_2, NO and NO_x were made after water vapor was removed from the sample, the values reported for all constituents are on a wet basis. Inlet air humidity was essentially zero for all tests.

Commercial grade (92% pure) gaseous propane was used for all tests (see table I). Propane has a heating value near that of jet fuels so that combustion characteristics, especially NO_x production, are similar. By using a gaseous fuel, problems associated with vaporization were avoided and it

was possible to simulate a prevaporized as well as a premixed system.

DATA ACCURACY

Combustor Heat Losses

Because the combustor was water cooled, quenching of the combustion could have occurred at the walls. Heat loss through cooling was measured to be consistently about 10 percent. However, by sampling gases only at the combustor centerline it should be possible to assume that the sample is the same as would result from an adiabatic burner.

The flameholder was also water-cooled. To determine the effect of heat losses on the emissions measurements, especially the NO_x emissions, preliminary tests were made at 600 K inlet temperature with and without water cooling over the full range of equivalence ratios tested. It was found that there was little difference in the results and that within the experimental scatter, the effect was insignificant. All the data presented were measured with the water-cooled flameholder.

Sample Validity

It should not be necessary to sample the exhaust gases of a uniform mixture at more than one location in the combustor to get a representative measurement, assuming no wall effects. To determine if this single-point sample was adequate an equivalence ratio based on the measured carbon concentrations was compared with that from fuel and air flow measurements. The agreement should be within ± 15 percent to insure good sample validity (ref. 10). The comparison is shown in figure 4 for the test data reported here.

The carbon-balance equivalence ratio averages about .9 of the equivalence ratio based on flow measurements. The differential pressure trans-

ducers on the propane flow orifice had a tendency to drift, displaying higher-than-actual orifice pressure drops. For this reason, it was assumed that the equivalence ratio based on carbon balance was more accurate. It was used to compute the emission indexes and it is also the equivalence ratio which appears as the abscissa and as a parameter in the data plots.

RESULTS AND DISCUSSION

Nitrogen Oxides Emissions

The total nitrogen oxides ($NO + NO_2$) emissions reported are for dry inlet air conditions. They show the strong effect of equivalence ratio typical of a uniform mixture (figs. 5(a) and 5(b)).

With an inlet mixture temperature of 600 K (fig. 5(a)), instability prevented operating with equivalence ratios less than .54. Lean blowout occurred at .5 equivalence ratio. Therefore, the lowest attainable NO_x emission index was about 1 g NO_2/kg fuel at this inlet temperature.

The curve of the nitric oxide measurements from reference 9 at an inlet mixture temperature of 590 K and a probe position of 46 cm from the flameholder is also shown in figure 5(a) for comparison. The present NO_x levels measured at the lowest equivalence ratios are about twice (about 15 ppm higher than) those obtained in the study of reference 9. Although only nitric oxide was measured in that study, measurements of NO in the present program showed that total NO_x is about 90% NO for all conditions tested (see fig. 6). The difference in results between the two programs may be typical of the measurement inaccuracies to be expected when operating with very low NO_x levels.

At 900 K inlet mixture temperature (fig. 5(b)), stability was improved at the lean conditions and it was possible to burn with equivalence ratios as low

as .42. Lean blowout occurred at an equivalence ratio just under .4. No_x emissions of .3 g NO_2/kg fuel were measured. For reference, emissions from conventional gas turbine engines at similar operating conditions are of the order of 20 g NO_2/kg fuel.

For constant probe positions the hot gas residence time varies with equivalence ratio (flame temperature). Data of figure 5 which fell in the range of 1.8 to 2.2 msec residence time have been replotted in figure 7 along with similar data taken at 30 m/s reference velocity. Also shown for comparison is the nitric oxide levels predicted by a well-stirred-reactor computer model (refs. 11 and 12) for a residence time of 2 msec. The data agree with the prediction for equivalence ratios up to .75. For richer mixtures, the model predicts higher values than are measured experimentally.

The experimental results may be in error due to catalytic probe effects for equivalence ratios near unity. Carbon monoxide is known to reduce nitric oxide to nitrogen. Halstead and Munro (ref. 13) found no catalytic effect in oxidizing atmospheres, but measured as much as two orders of magnitude decrease in nitric oxide concentration in reducing atmospheres. England, et al (ref. 14) reported the difference in NO measured with several probes, including a stainless steel probe and a water-cooled quartz probe, for a range of equivalence ratios from .4 to 1.5. For equivalence ratios less than .65 they found no difference in measured NO between the various probes. As equivalence ratio was increased, the stainless-steel probe showed an increasing error compared with the quartz. At an equivalence ratio of 1.0 the NO from the stainless-steel probe was 25% below that for the quartz.

For the present experiments it is impossible to determine how much of an error might result due to catalytic effects. Both probe residence time

and sample gas temperature affect the reduction of NO to N_2. The probe used was designed for rapid cooling to temperatures on the order of 600 K while sample line temperatures were maintained at 410-450 K.

Carbon Monoxide Emissions

The measured CO emissions are presented in figure 8. For comparison, the equilibrium levels at 600 and 800 K inlet mixture temperatures are also shown. Within experimental accuracy, CO has reached equilibrium, suggesting complete combustion, for nearly all the conditions shown. As equivalence ratio was decreased for 600 K inlet temperature the CO measured 10 cm from the flameholder began to rise above equilibrium indicating a lengthened reaction zone. Moving the probe to 20 cm from the flameholder caused the measured CO to drop back down to equilibrium. At the 800 K inlet temperature, near equilibrium CO was measured for all probe positions, even at equivalence ratios near lean blowout.

In the measurement of carbon monoxide it is necessary to cool the hot sampled gases quickly to quench the reactions. If this is not done the CO concentration will adjust to the shifting equilibrium of the cooling sample, giving measurements which are below the actual levels in the combustor. Evidence of not-rapid-enough quench is present in some of the experimental data as the CO was measured at a level below equilibrium. However, because the CO does not decrease with distance from the flameholder, it may be concluded that near-equilibrium levels were actually present in the burner.

Unburned Hydrocarbons Emissions

Unburned hydrocarbon emission indexes were less than 1 g C_3H_8/kg fuel for all but one test point. The one exception was at an equivalence ratio of .54 with 600 K inlet mixture temperature and a probe position of 10 cm from

the flameholder. Because the hydrocarbon oxidation is not yet complete at this point 4.2 g C_3H_8/kg fuel were measured. For the range of equivalence ratios tested, the equilibrium hydrocarbon levels are virtually zero.

Combustion Efficiency

As no thermocouple rakes were used downstream of the burner, it was only possible to determine combustion efficiency from gas analysis. Combustion inefficiency is due to incomplete burning of CO and hydrocarbons. In these experiments the levels of both CO and unburned hydrocarbons were measured to be near equilibrium. For this reason, the calculated combustion efficiencies for all test points shown in figures 5-8 were greater than 99%.

Residence Time Effects

In determining the minimum possible residence time for limiting NO_x formation, consideration must be given to adequate combustion efficiency. Therefore, it was of interest to determine what sacrifices in efficiency might result when residence time is reduced for NO_x control. Figure 9 is a cross-plot made using the data of figures 5-8 along with additional measurements made with probe positions of 10-30 cm at 30 m/s reference velocity and a 5-cm probe position at 25 m/s. This additional data not only extended the range of residence times but also provided confirmation of the trends indicated by the rest of the data. In this figure, total nitrogen oxides emission index is a function of residence time with combustion efficiency and equivalence ratio as parameters. The residence time for each test point was calculated from the probe position using the measured weight flowrates of air and fuel, the measured pressure in the combustor, and the ideal flame temperature, assuming that temperature and pressure were constant downstream

of the flameholder.

Figure 9 shows that residence time reduction is an effective way to decrease NO_x emissions if the equivalence ratio is high enough. At .6 equivalence ratio, for example, the NO_x level at 1 msec is 43% that at 3 msec. For richer equivalence ratios there is an even stronger effect of time on NO_x emissions, as indicated by the rates of formation shown in figure 1. However, for leaner mixtures the rate of formation can be so low that NO_x is fairly insensitive to time. At an equivalence ratio of .4, for example, NO_x drops only about 15% for the same 3-msec-to-1-msec change in residence time.

These measurements suggest that for low equivalence ratios NO_x is formed more rapidly near the flameholder than it is farther away, in agreement with the observations in reference 7. This non-linearity is apparent only at low equivalence ratios, while for equivalence ratios near unity there appears to be a nearly linear effect of probe position. This result is probably due to super-equilibrium levels of oxygen atom concentration; this overshoot has been found to be greatest for lean mixtures (ref. 15).

Figure 9 also shows that as equivalence ratio is decreased larger residence times are required to maintain combustion efficiency at a particular level. Thus, 99.7% combustion efficiency is achieved at .6 equivalence ratio after only .75 msec, while it takes about 1.7 msec to burn to the same efficiency at an equivalence ratio of .4.

The figure suggests that the way to achieve the lowest possible NO_x emissions while maintaining high combustion efficiency is to burn as lean as possible but to allow long residence times.

CONCLUDING REMARKS

These studies showed that very low NO_x emissions can be achieved by premixing and prevaporizing at lean equivalence ratios. At 800 K inlet mixture temperature and 5.5 atm pressure, emissions on the order of .3 to .5 g NO_2/kg fuel were measured at an equivalence ratio of .42. At 600 K inlet mixture temperature, emissions were between 1 and 1.5 g NO_2/kg fuel at .55 equivalence ratio. Leaner burning was prevented by lean blowout at just under .4 equivalence ratio with 800 K inlet mixture temperature and poor stability with 600 K inlet mixture temperature at equivalence ratios less than .54.

There was excellent agreement between measured NO_x and that predicted by a well-stirred-reactor computer model for equivalence ratios less than .75.

Carbon monoxide and unburned hydrocarbon emissions were essentially at the equilibrium level for the entire range of equivalence ratios for residence times greater than 1.5 msec. Combustion efficiency was thus computed to be greater than 99% for all test points taken with a residence time greater than 1.5 msec.

Although premixing and prevaporizing shows potential for low NO_x formation, it also presents practical problems. One is the possibility of flame propagation upstream of the flameholder to the fuel nozzle. Besides causing damage to combustor components, upstream burning defeats the objective of burning a uniform mixture. Some combination of a high pressure drop across the flameholder or high velocity upstream of the flameholder will be necessary to avoid upstream burning. To insure uniformity of mixture a liquid-fuel vaporizer will be required.

Unlike a conventional combustor, a premixing, prevaporizing combustor has no locally rich zones to maintain combustion in very lean mixtures. Thus, lean blowout occurs at a higher reaction zone equivalence ratio than for a conventional combustor. The necessity of maintaining the reaction zone equivalence ratio high enough to prevent blowout yet low enough to avoid appreciable NO_x formation leaves a relatively narrow span of permissable values. Variable geometry will probably be necessary to allow a wide range of combustor equivalence ratio while maintaining reaction zone equivalence ratio within the required limits.

REFERENCES

1. Norgren, C. T., and Ingebo, R. D., "Effects of Prevaporized Fuel on Exhaust Emissions of an Experimental Gas Turbine Combustor," NASA TM X-68194, 1973.

2. Norgren, C. T., and Ingebo, R. D., "Effect of Fuel Vapor Concentrations on Combustor Emissions and Performance," NASA TM X-2800, 1973.

3. Fletcher, R. S., and Heywood, J. B., "A Model for Nitric Oxide Emissions from Aircraft Gas Turbine Engines," AIAA Paper 71-123.

4. Pompei, F., and Heywood, J. B., "The Role of Mixing in Burner-Generated Carbon Monoxide and Nitric Oxide," Comb. and Flame, Vol. 19, 1972, pp. 407-418.

5. Appleton, J. P., and Heywood, J. B., "The Effects of Imperfect Fuel-Air Mixing in a Burner on NO Formation from Nitrogen in the Air and the Fuel," 14th Symposium (International) on Combustion, University Park, Pa., Aug. 20-25, 1972, pp. 777-786.

6. Ingebo, R. D., and Norgren, C. T., "High-Pressure Combustor Exhaust Emissions with Improved Air-Atomizing and Conventional Pressure-Atomizing Fuel Nozzles," NASA TN D-7154, 1973.

7. Pompei, F., and Gerstmann, J., "NO_x Production and Control in a Premixed Gasoline Fired Combustion System," Paper presented at the 75th National Meeting of AIChE, Detroit, Michigan, June 3-6, 1973.

8. Ferri, A., and Roffe, G., "Low NO_x Combustion Processes," Paper presented at the 75th National Meeting of AIChE, Detroit, Michigan, June 3-6, 1973.

9. Anderson, D. N., "Effect of Premixing on Nitric Oxide Formation," NASA TM X-68220, 1973.

10. "Procedure for the Continuous Sampling and Measurement of Gaseous Emissions from Aircraft Turbine Engines," SAE ARP 1256, 1971.

11. Edelman, R., and Economos, C., "A Mathematical Model for Jet Engine Combustor Pollutant Emissions," AIAA Paper 71-714.

12. Boccio, J. L., Weilerstein, A., and Edelman, R. B., "A Mathematical Model for Jet Engine Combustor Pollutant Emissions," NASA CR-121208, 1973.

13. Halstead, C. J., and Munro, A. J. E., "The Sampling, Analysis, and Study of the Nitrogen Oxides Formed in Natural Gas/Air Flames," Proceedings, Conference on Natural Gas Research and Technology, Chicago, Ill., February 28-March 3, 1971.

14. England, C., Hauseman, J., and Teixeira, D. P., "Sampling Nitric Oxide from Combustion Gases," Comb. and Flame, Vol. 20, 1973, pp. 439-442.

15. Homer, J. B., and Sutton, M. M., "Nitric Oxide Formation and Radical Overshoot in Premixed Hydrogen Flames," Comb. and Flame, Vol. 20, 1973, pp. 71-76.

TABLE I. - PROPERTIES OF COMMERCIAL GRADE

PROPANE USED IN THIS STUDY

Analysis:	C_3H_8	92 percent
	C_2H_4	1-2
	C_3H_6	4-6
	C_4H_{10}	1-2
	Volatile S	4-6 grains/100 ft^3
Dew point:	244 K (-20° F)	
Heat content:	11 900 cal/g (21 400 Btu/lbm)	
Vapor pressure:	11.9 atm. at 310 K (175 psi at 100° F)	
Specific gravity:	0.508	

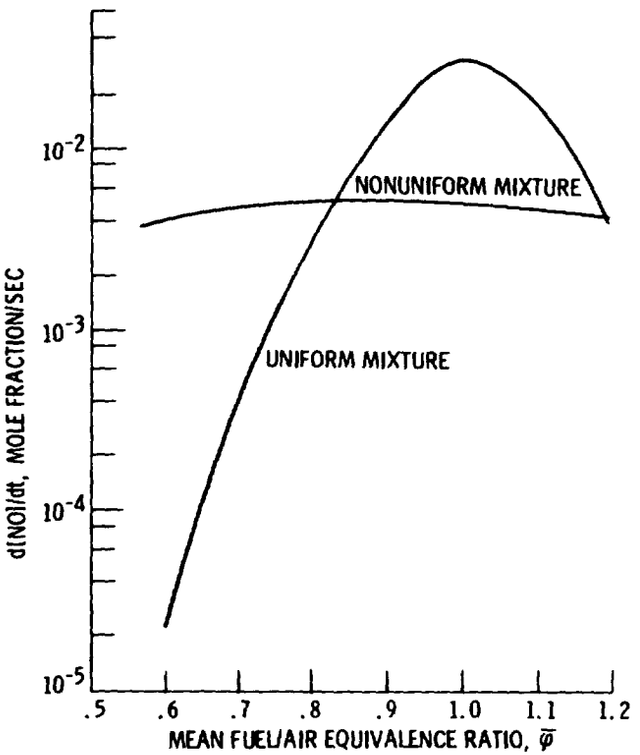

Figure 1. - Rate of formation of nitric oxide (from ref. 5).

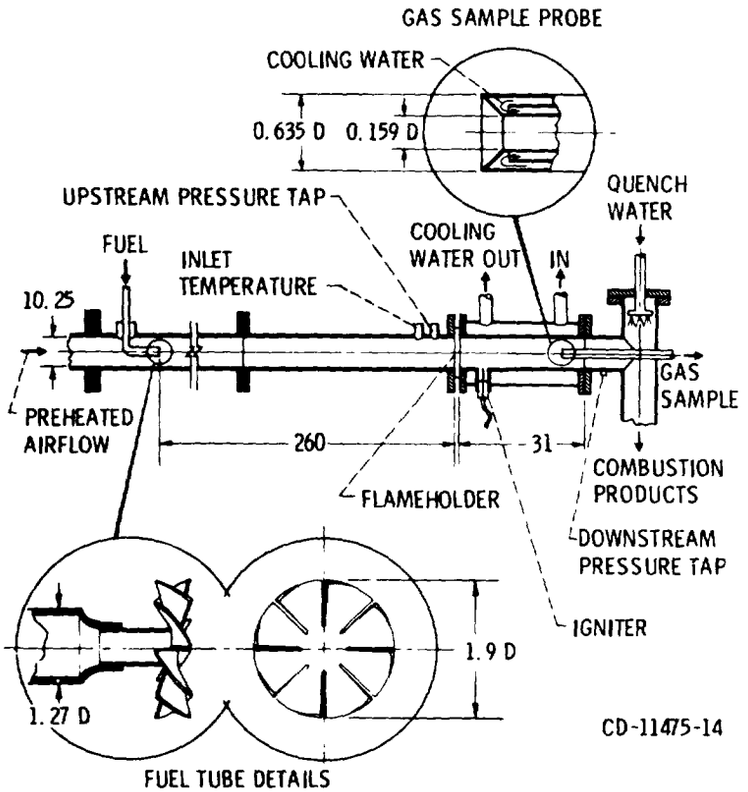

Figure 2. - Rig schematic. (Dimensions are in cm.)

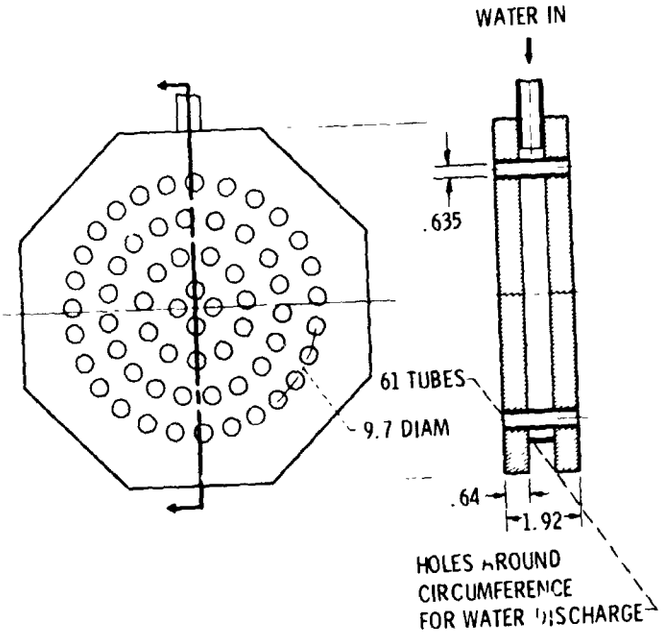

Figure 3. - Flameholder (dimensions in cm). Open area = 25 percent.

E-8047

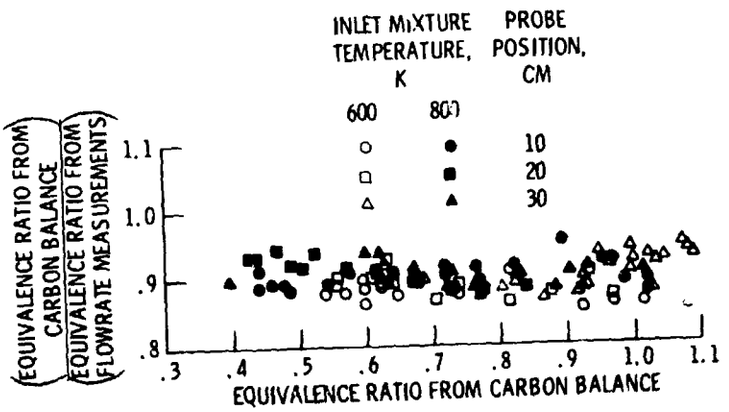

Figure 4. - Gas sample validity. Inlet pressure, 5.5 atm; reference velocity, 25 m/s.

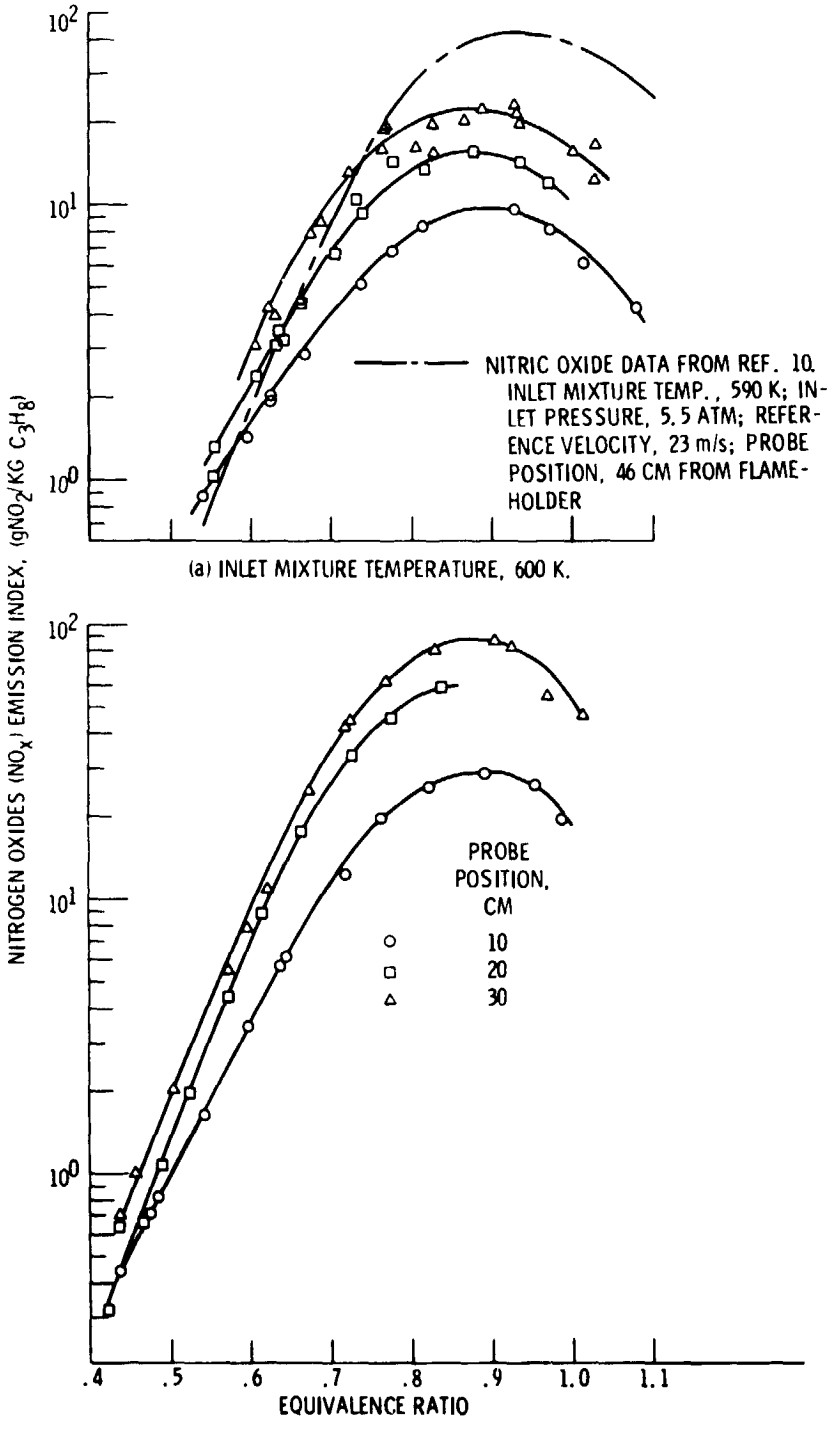

Figure 5. - Nitrogen oxides emissions. Inlet pressure, 5.5 atm; reference velocity, 25 m/s.

E-8047

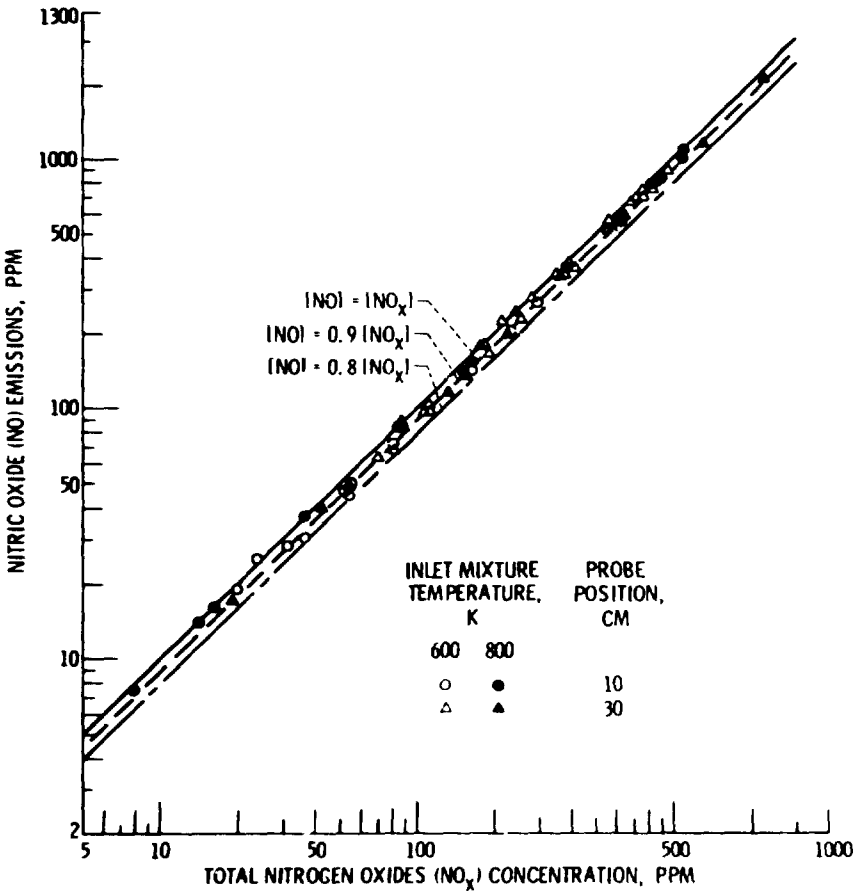

Figure 6. - Relationship between nitric oxide emissions and total NO_x. Inlet pressure, 5.5 atm; reference velocity, 25 m/s; equivalence ratio, 0.40 - 1.0.

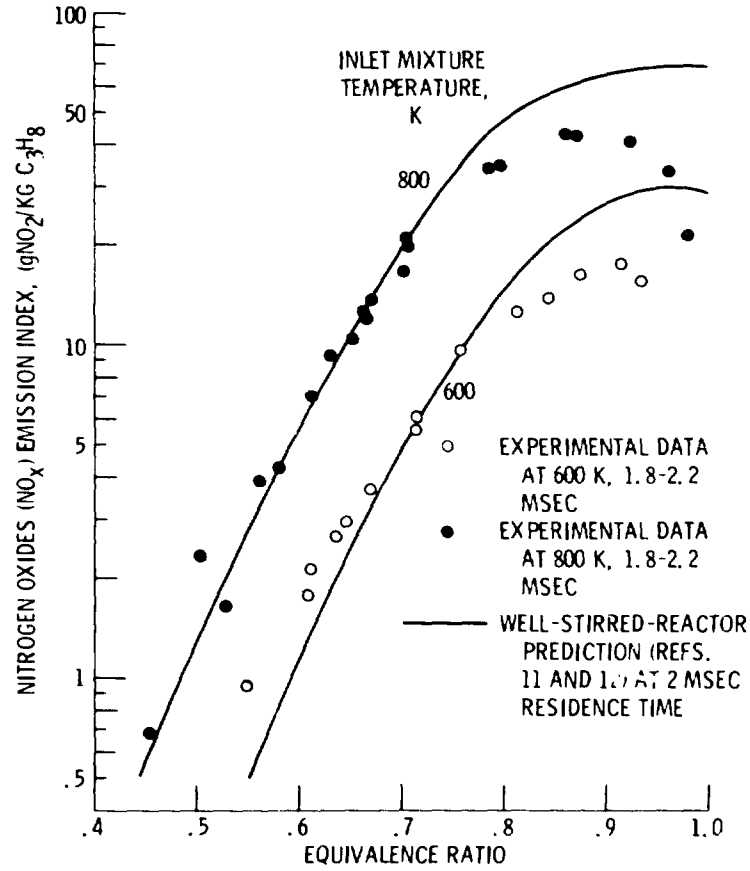

Figure 7. - Nitrogen oxides emissions after 2 msec. Inlet pressure, 5.5 atm; reference velocity, 25 and 30 m/s.

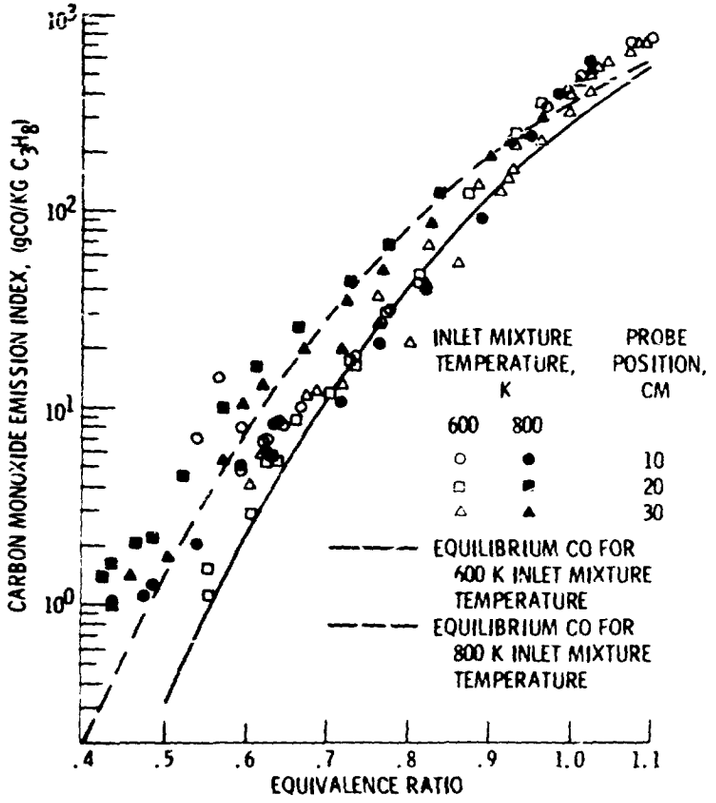

Figure 8. - Carbon monoxide emissions. Pressure, 5.5 atm; reference velocity, 25 m/s.

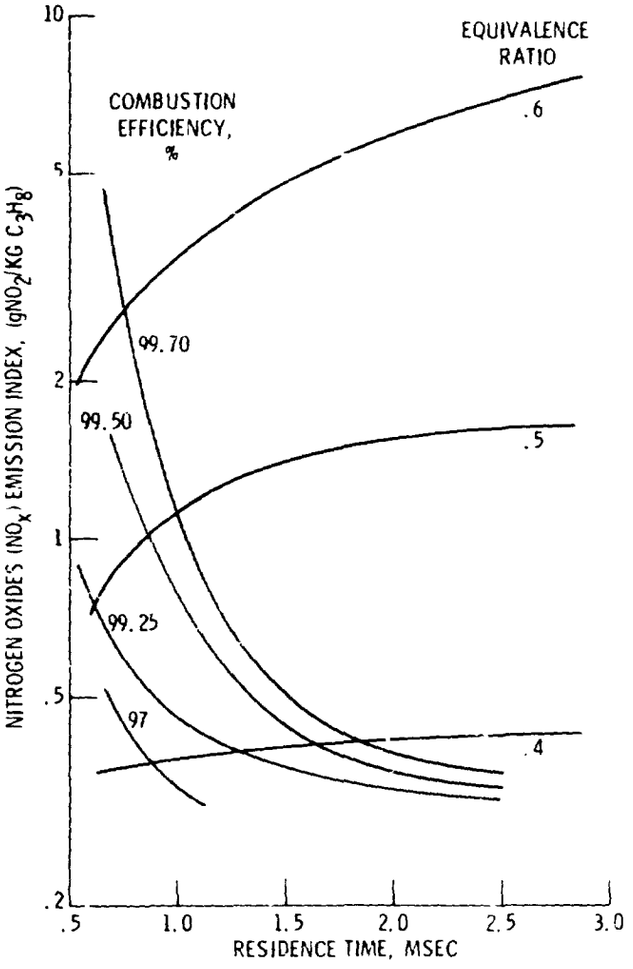

Figure 9. - Effect of residence time on nitrogen oxides emissions. Inlet mixture temperature, 800 K; inlet pressure, 5.5 atm; reference velocity, 25 and 30 m/s.