View metadata, citation and similar papers at core.ac.uk
brought to you by CORE
provided by NASA Technical Reports Server

X-691-74-249
PREPRINT

NASA TM X-70749

ABSOLUTE RATE PARAMETERS FOR THE REACTION OF GROUND STATE ATOMIC OXYGEN WITH CARBONYL SULFIDE

R. BRUCE KLEMM
LOUIS J. STIEF

(NASA-TM-X-70749) ABSOLUTE RATE PARAMETERS FOR THE REACTION OF GROUND STATE ATOMIC OXYGEN WITH CARBONYL SULFIDE (NASA) 27 p HC $4.50 CSCL 07D
N74-32574
Unclas
G3/06 48003

SEP 1974
RECEIVED
NASA STI FACILITY
INPUT BRANCH

AUGUST 1974

GSFC
GODDARD SPACE FLIGHT CENTER
GREENBELT, MARYLAND

Absolute Rate Parameters for the Reaction of Ground State Atomic Oxygen with Carbonyl Sulfide

by

R. Bruce Klemm[a] and Louis J. Stief
Astrochemistry Branch
NASA/Goddard Space Flight Center
Greenbelt, MD 20771

Abstract

The rate parameters for the reaction of $O(^3P)$ with carbonyl sulfide,

$$O(^3P) + OCS \rightarrow CO + SO \qquad (1)$$

have been determined directly by monitoring $O(^3P)$ using the flash photolysis-resonance fluorescence technique. The value for k_1 was measured over a temperature range of 263° - 502° K and the data were fitted to an Arrhenuis expression with good linearity,

$$k_1 = (1.65 \pm .13) \times 10^{-11} \exp(-4305 \pm 55/RT) \text{ cm}^3 \text{ molec}^{-1} \text{ s}^{-1}.$$

A comparison of the present results with those from previous studies of reaction (1) is also presented.

---

a - NASA/NRC Resident Research Associate.

INTRODUCTION

During the past several years, a number of investigators have reported values for the absolute rate constant and the Arrhenius parameters for the reaction of ground state atomic oxygen with carbonyl sulfide,[1-7]

$$O(^3P) + OCS \rightarrow CO + SO. \qquad (1)$$

This reaction has also been employed in studies involving the $SO(^3\Sigma)$ species as a means of producing sulfur monoxide cleanly in its ground electronic state.[5,8] Only two techniques have been used, however, in the previous kinetic studies; (1) discharge flow combined with either mass spectrometry or ESR;[1-5] and (2) steady state photolysis with product analysis.[6] An examination of the previous studies of reaction (1) shows primarily two values for k_1 with a rather large discrepancy between them.[9] The values are $(1\text{-}2)\times10^{-10}\ \exp(-5800/RT)\,cm^3\ molec^{-1}\,sec^{-1}$ reported by Wagner[2,3] and $(1.6\text{-}3.2)\times10^{-11}\ \exp(-4500/RT)\,cm^3\ molec^{-1}\,sec^{-1}$ reported by Heicklen[6] and Westenberg.[4] The most obvious disagreement lies in the factor of ~6 in the A-factor. Also, a difference of 1300 cal./mole in $E_{act}(O+OCS)$ is outside reasonable experimental error. A kinetic study of reaction (1) is reported here in which the flash photoylsis-resonance fluorescence technique[10-13] has been utilized with the aim of clarifying the value for k_1.

EXPERIMENTAL

In the technique used for this kinetic study of reaction (1), atomic oxygen was produced by the flash photolysis of O_2. The atom decay was monitored, following the flash, via resonance fluorescence and pulse counting techniques. At the low atom concentrations employed in this method, $\sim 10^{11}$ cm^{-3}, the fluorescence signal was directly proportional to the O-atom concentration; thus it was possible to determine bimolecular rate constants directly from the experimental decay curves.[10] The experimental apparatus used in the present study is shown schematically in Figure 1. Essentially, it consisted of a variable temperature cell centered in a vacuum chamber with a spark discharge flash lamp attached at the base of the cell; a microwave discharge "resonance lamp" perpendicular to one face; and a photomultiplier tube perpendicular to another face of the cell. The variable temperature cell is similar to the one described by Kurylo et al.[12] Optically flat LiF windows were sealed to ports on all six faces of the reaction cell using silicone rubber O-rings which were held under compression by screw-down retainer rings. In this cell cooling was accomplished by flowing chilled N_2 through channels within the brass body of the cell. High temperatures were attained by means of nichrome heating wire. The stainless steel tubing used to flow the cooling N_2 and to introduce the gas mixture also served as the mechanical support for the cell and isolated the cell thermally. The temperature was determined using a DORIC thermocouple indicator equipped with a copper-constantan thermocouple attached mechanically to the cell. The temperature measured by this means was found to be accurate to

within $\pm$ .2°C at three temperatures (-97.8, 0.0 and 100.°C) using methanol slush, ice water and boiling water. Control of the temperature at a fixed value was readily achieved and fluctuations were normally held to within $\pm$ .5°C.

The spark discharge flash lamp was of conventional design.[13,14] The lamp body was fabricated from a block of polytetrafluoroethylene and solid tungsten tipped electrodes formed the spark gap. The vacuum UV spectral distribution of a flash lamp of similar design has been characterized as continuous with broad emission maxima superimposed.[15] In the present system a filter chamber was situated between the lamp body and the reaction cell. This served to facilitate the insertion of various window materials in front of the flash lamp and to protect the LiF window in the base of the vacuum chamber from radiation damage and sputtering of the electrodes. A sapphire window was used on the photoflash throughout this study to preclude the formation of atomic oxygen in the (^{1}S) electronic state.[16] High purity N_2 was used as the discharge medium so that high standoff voltages could be achieved. Breakdown in the gas was accomplished either free running at reduced pressure (spontaneous discharge) or by means of a 30 kV trigger pulse. In either case, the duration of the discharge was about 1 μsec and control of the discharge voltage was good to $\pm$ 10% over the range of 2 to 15 kV. With a 4.5 μF capacitor, this corresponded to discharge energies ($E = 1/2\ CV^2$) of 9-506 joules. However, the discharge is not efficient in the production of short wavelength light and window transmission losses coupled with a geometrical factor of $\sim 2\times10^{-3}$ further reduced the amount of

useful vacuum UV radiation generated by the flash. Using the formation of acetylene from the photolysis of ethylene as an actinometer ($\Phi_{C_2H_2}=1$)[17], the photon flux incident on the reaction cell from the flash lamp was estimated to be $\sim 2\times10^{12}$ photons/cm^2/flash (140nm < λ < 180nm) at a discharge energy of 56 J.

The microwave discharge "resonance lamp" used in this study was a flow type,[18] operating at a pressure of about 1 Torr and using an Evenson-Broida microwave cavity[19] powered by a 2450 MHz low ripple microwave generator. High purity helium was used in the discharge to generate weakly reversed atomic oxygen resonance radiation (130.2, 130.5, 130.6nm) along with several lines due to atomic hydrogen, nitrogen, and carbon. This additional emission did not alter the signal due to $O(^3P)$ since it was not resonantly scattered, but it did contribute to the overall (wall) scattered light signal. Thus, the O-atom signal-to-noise ratio was improved slightly by using a CaF_2 filter in front of the resonance lamp to exclude radiation below about 122nm.

A "solar blind" photomultiplier tube (CsI semi-transparent photocathode, EMR model 542-G-08-18) was used to detect the scattered O-atom resonance radiation at right angles to both the resonance lamp and the flash lamp. The current pulses resulting from single photon events were extracted by capacitively coupling the photomultiplier (PM) anode to a fast (FET) impedance matching circuit. The signal pulses were then amplified (x200 gain) and passed through a voltage discriminator to eliminate any low voltage noise and finally stored in a multichannel

analyzer. In this configuration it was possible to operate the PM anode at positive high potential (typically 3600 V) and maintain the photocathode at ground. This was desirable since the PM could be gated by switching a low bias voltage (+200 V) on the cathode. Gating the PM in this way, it was possible to eliminate saturation of the PM dynode train that sometimes resulted from the scattered light of the photoflash.

The multichannel analyzer (MCA-Northern Scientific NS636/458/421) used in this study to store the resonance fluorescence signal had an internal crystal clock and a choice of preset channel widths of 5 μsec to .9 sec. Set at 100 μsec/channel, the error in the time base (or channel dwell time) of the MCA was determined to be < .1% measured against a calibrated Hewlett-Packard counter/timer (model 5590A).

In the experiments performed in this study, atomic oxygen was generated in the central portion of the reaction cell in an excess of both added reactant, OCS, and the source compound, O_2. In addition to reaction with OCS, therefore, O-atoms were lost by reaction with O_2,

$$O + O_2 + M \rightarrow O_3 + M, \qquad (2)$$

as well as by diffusion out of the reaction sampling zone (defined by the intersection of the beams from the flash lamp and the resonance lamp subtended on the photomultiplier). Since both the O_2 pressure and the inert gas pressure (M) were large compared to that of atomic oxygen, the decay of O-atoms due to reaction (2) is given by

$$\ln([O_o]/[O]) = k_2 \; [O_2][M] \; t. \qquad \text{I}$$

The rate of diffusion also follows a first order law[20], and for this process,

$$\ln([O_o]/[O]) = K_d\ t, \qquad \text{II}$$

where the "rate constant", K_d, depends on the total pressure, the temperature, and the type of inert gas. Combining equations I and II with the loss rate for reaction (1),

$$\ln([O_o])/([O]) = k_1[OCS]\ t, \qquad \text{III}$$

yields an expension for the observed atom decay,

$$\ln([O_o]/[O]) = (k_1[OCS] + k_2[O_2][M] + K_d)\ t. \qquad \text{IV}$$

The term $(k_2[O_2][M] + K_d)$ was determined experimentally by measuring the decay rate in gas mixtures that did not contain the reactant, OCS.

Linear and semi-logarithmic plots of typical atom decays for "diffusion" and reaction are shown in Figures 2 and 3. The semi-logarithmic plots clearly illustrate that the decays are first order over at least two decay times, τ. In general, analysis of the data was accomplished using a linearized least squares computation run on an IBM 1800 computer. This procedure yielded psendo-first order rate constants, K,

$$K = k_1[OCS] + K^*, \qquad \text{V}$$

where K* was the diffusion + O_2 decay rate, $(k_2[O_2][M] + K_d)$. The bimolecular rate constant, k_1, was thus derived using equation VI,

$$k_1 = (K-K^*)/(P_{OCS} x 3.21 x 10^{16} \text{molec cm}^{-3} \text{torr}^{-1} x 298^\circ K/T^\circ K). \qquad \text{VI}$$

The linear variation of the fluorescence signal with atom concentration is demonstrated in Figure 4 where the initial fluorescence count rate (count rate extrapolated to zero time) is plotted as a function of the flash energy.

Gas reaction mixtures were prepared in a glass gas handling system which could be pumped to less than 10^{-6} Torr. Low pressures (.01-10.0 Torr) were determined using a calibrated capacitance manometer (MKS-Baratron) while high pressures (10-800 Torr) were read off a two turn Wallace and Tiernan gauge. The accuracy of these measurements was within $\pm$ .1% in the low pressure region and $\sim \pm$ 2% at high pressures. Gas mixtures were made up in 22 liter bulbs and allowed to stand 2-3 hours prior to performing experiments to become completely mixed. In flow experiments, a high pressure MKS manometer head was used in conjunction with a servo-value to accurately control the pressure of the gas mixture in the reaction cell. Flow rates were controlled using a micrometer valve as a throttle. Volume flow rates were estimated by displacement and converted to linear flow velocity for the cross section of the reaction cell. All gases used in the preparation of reaction mixtures for this study were either ultra-high-purity (Ar, He, Matheson) or research grade (OCS, Matheson; O_2, Air Products). The OCS was degassed under high vacuum at liquid N_2 temperature while the argon, helium and oxygen were used without further purification.

Results and Discussion

The rate data obtained in the present study of reaction (1) are given in Tables 1 and 2. The experimental conditions, e.g. total

pressure, flash intensity, and OCS pressure, were varied over a wide range at two temperatures, 298° and 417°K, to test for possible kinetic problems due to secondary reactions. Also, to demonstrate that possible product build-up was not important, the number of flashes per gas filling was varied in static experiments and several experiments were performed with the gas mixture flowing slowly through the reaction cell. The uncertainties (2 x std. dev.) in the data at 298° and 417°K were about ± 10%; and thus, there is no evidence of serious complications in the kinetics. The bimolecular rate constant, k_1, is plotted in Figure 5 vs. 1/T over the temperature range 263° to 502°K to obtain the following Arrhenius expression:

$$k_1 = (1.65 \pm .13) \times 10^{-11} \exp(-4305 \pm 55/RT)\ cm^3\ molec^{-1} s^{-1}.$$

The uncertainties in A and E_{act} for reaction (1) given above are the standard errors[21] which were calculated from a weighted least squares treatment of the data.

In the present study of reaction(1), carbonyl sulfide as well as O_2 was photolyzed by the photoflash. At wavelengths above ~ 1420Å, the sapphire cut-off, only $O(^1D)$ and $O(^3P)$ can result from the photolysis of O_2.[16] The primary products of the OCS photolysis are CO and atomic sulfur,[22,23] with the S-atoms being formed in the ground state, (^3P) and two low lying excited states, (^1D) and (^1S).[23] Using recent rate data for the deactivation and reaction of the metastable S- and O-atoms formed in the flash, it is possible to determine the probable fates of these species in the present system. These data and the

results of lifetime calculations are summarized in Table 3. The reaction and/or deactivation of $S(^1D)$ with O_2 was omitted since no data on this system appears to exist. It is evident that under conditions of these experiments both $O(^1D)$ and $S(^1D)$ are preferentially deactivated to the ground state as opposed to reacting to form products. In the case of $S(^1S)$, however, deactivation and reaction may be of comparable probability depending on the relative modes involved in collisions with OCS and O_2. Yet, it is doubtful that the reaction of $S(^1S)$ with OCS is of significant importance in the present study since reaction (5)

$$S(^1S) + OCS \rightarrow S_2 + CO \tag{5}$$

would probably have been followed by reaction (10),

$$O(^3P) + S_2 \rightarrow SO + S. \tag{10}$$

This sequence, reaction (5) followed by (10), would probably have resulted in a flash intensity dependence on k_1, but no kinetic complication of this type was observed. Finally, the rapid reaction of $S(^3P)$ with O_2 is found to lead to a very short lifetime for atomic sulfur in the present system. From a consideration of the above discussion, it may be concluded that when kinetic observations of $O(^3P)$ were delayed for 200-300 μsec after the flash, the only species of kinetic importance was ground state atomic oxygen.

The available rate parameters for the reaction, $O(^3P)$ + OCS, are summarized in Table 4, to facilitate a comparison between the different

studies. In addition, two discharge flow studies performed at 298°K by Sullivan and Warneck[1] ($.91 \times 10^{-14} cm^3 molec^{-1} s^{-1}$) and Breckenridge and Miller[5] ($1.2 \times 10^{-14} cm^3 molec^{-1} s^{-1}$) are in good agreement with the present room temperature result for k_1. The data for k_1 in Table 4 are seen to fall essentially into two groups. Despite minor differences, the value of k_1 determined in the present study appears to agree well with the values obtained by Westenberg[4] and Heicklen[6] and Timmons.[37] This agreement in the value of k_1 obtained using three widely different experimental techniques further suggests that the results of Wagner et al.[2,3] are in error. Although the cause for this error is not readily apparent, it has been pointed out previously [4,6] that the systems employed by Wagner et al.[2,3] might have been subject to systematic error because: (1) the high temperature data (ref. 3) were obtained indirectly; while (2) in the low temperature experiments (ref. 2) the use of a sampling probe might have effected the measured O-atom concentration.

As pointed out above, the present value for k_1 is in good agreement with that from three other studies, except for a subtle difference in the preexponential factor. This minor discrepancy lies in the value reported by Westenberg and deHaas[4] for A(O+OCS) which is approximately a factor of two larger than that determined by Heicklen[6] and now this study and Timmons.[37] An explanation for this discrepancy is not evident, especially since Westenberg and deHaas performed a careful examination of the stoichcoimetry factor (n) for reaction (1) in their system and concluded that n = 1.0 over a wide temperature range. Yet, these

authors did note that curvature of the O-atom decay rate was observed occasionally at long decay times. This might indicate that some minor complicating secondary reaction(s) occurred in their system.

In conclusion, the results of the present study using the flash photolysis-resonance fluorescence technique confirm the value of 4300 $\pm$ 200 cal/mole for the activation energy of reaction (1). A small discrepancy in the preexponential factor for the $O(^3P)$ + OCS reaction has not been resolved conclusively but the evidence would seem to support the value reported here ($1.65 \times 10^{-11} cm^3 molec^{-1} s^{-1}$).

TABLE 1

Rate Data for the Reaction of $O(^3P)$ with OCS at 298°K.[a]

P_{ocs} (Torr)	P_{O_2} (Torr)	P_{total} (Torr)	Flash Energy (J)	First-Order Rate Constant (sec^{-1})	Bimolecular Rate Constant ($cm^3 molec^{-1} s^{-1} x 10^{14}$)
		Ar			
.40	1.50	100	81	195.8	1.06
.40	1.00	200	81	221.7	1.19
.50	1.00	40	81	213.8[b]	1.14
.80	1.50	100	81	357.4	1.16
1.00	1.50	100	81	433.4	1.17
—	1.00	40	81	30.1[b]	—
—	1.50	100	81	59.4[b]	—
—	1.00	200	81	68.7[b]	—
		He			
.30	1.00	50	81	167.3	1.07
1.00	1.00	50	36	457.2	1.23
1.00	1.00	50	81	451.1[c]	1.21
1.00	1.00	50	81	417.7[d]	1.10
1.00	1.00	50	81	480.2[e]	1.30
1.00	1.00	50	182	417.7	1.10
1.00	1.00	50	182	440.2[e]	1.17
1.60	1.00	50	110	685.8	1.21
—	1.00	50	81	63.8[b]	—

a - Mean value for k_1 is $1.16 \times 10^{-14} cm^3 molec^{-1} s^{-1}$ with standard deviation of $\pm .07 \times 10^{-14}$.

b - Average of duplicate experiments.

c - Twenty flashes per filling of reaction mixture.

d - Forty flashes per filling of reaction mixture.

e - Gas mixture flowing through reaction cell at ~ 1.0 cm/s.

TABLE 2

Temperature Dependence of Rate Constant for the Reaction of $O(^3P)$ with OCS.

Temp (°K)	P_{ocs} (Torr)	P_{O_2} (Torr)	P_{total} (Torr, Ar)	Flash Energy (J)	First-Order Rate Constant (sec^{-1})	Bimolecular Rate Constant[a] ($cm^3 molec^{-1} s^{-1} x10^{14}$)
263	1.00	1.50	100	81	247.1	.39
263	—	1.50	100	81	102.6[b]	—
298	—	—	—	—	—	(1.16±.14)[c]
334	.40	1.50	100	81	317.1	2.40
334	—	1.50	100	81	41.6	—
341	.50	1.00	100	144	434.8	2.79
341	—	1.00	100	81	42.8	—
382	.50	1.00	100	225	665.0	5.06
382	1.00	2.00	200	144	1470.0	5.70(5.38)
382	—	1.00	100	81	31.3	—
382	—	2.00	200	81	43.0	—
417	.15	1.00	100	81	317.7	8.38
417	—	1.00	100	81	29.5	—
417	.40	1.50	40	81	911.1	9.31
417	—	1.50	40	81	56.9[b]	—
417	.40	1.50	100	81	868.5[d]	9.09
417	.40	1.50	100	81	854.5[e]	8.94
417	.40	1.50	100	81	943.3[f]	9.90
417	.40	1.50	100	36	892.9	9.35
417	.40	1.50	100	110	873.4	9.14
417	.40	1.50	100	182	885.0	9.27
417	.80	1.50	100	110	1793.0	9.58
417	—	1.50	100	81	34.6[b]	—
417	.40	1.50	200	81	863.8	9.10(9.21
417	—	1.50	200	81	28.5	— ±.80)
502	.40	1.50	100	110	1640.0[f]	20.6
502	.40	1.50	100	182	1920.0[f]	24.2(22.4)
503	—	1.50	100	110	72.1[f]	—

a - Mean values at each temperature are given in parentheses; uncertainties quoted are 2σ.
b - Average of duplicate experiments.
c - Average of data from Table I.
d - Five flashes per filling of reaction mixture.
e - Twenty flashes per filling of reaction mixture.
f - Gas mixture flowing through reaction cell at ~ 0.5 cm/s.

TABLE 3

Calculated Lifetimes of Electronically Excited

O- and S- atoms in the Present Study

Atom	Molecule	Mode	k^a	τ^b
$O(^1D)$	O_2	deact.	$\sim 6 \times 10^{-11}$ c	~ .5
$O(^1D)$	OCS	deact. + react.	$\sim 7 \times 10^{-11}$ d	~ .5
$O(^1D)$	Ar	deact.	$\sim 1 \times 10^{-12}$ e	~ .3
$S(^1S)$	OCS	deact. + react.	1×10^{-11} f	30
—	—	—	$\sim 4 \times 10^{-13}$ g	~ 800
$S(^1S)$	O_2	deact. + react.	6×10^{-13} g	52
$S(^1S)$	Ar	deact.	$<5 \times 10^{-17}$ h	>6000
$S(^1D)$	OCS	react.	$\sim 7 \times 10^{-11}$ i	~ .5
$S(^1D)$	OCS	deact.	$\sim 1 \times 10^{-11}$ i	~3.5
$S(^1D)$	Ar	deact.	$\sim 3 \times 10^{-12}$ i	~ .1
$S(^3P)$	O_2	react.	2.2×10^{-12} j	14

---

a - Bimolecular rate constant, units are cm^3 $molec^{-1}s^{-1}$.

b - Calculated lifetime in μsec for 100mTorr OCS, 1 Torr O_2 and 200 Torr Ar.

c - Heidner, Husain, and Wiesenfeld;[24] Gilpin, Schiff and Welge;[25] Noxon;[26] Clark and Noxon.[27]

d - Assuming a rate similar to that for deactivation and reaction of $S(^1D)$ with OCS (see reference 32).

e - Heidner and Husain;[28] Stief, Payne, and Klemm.[29]

f - Donovan.[23]

g - Dunn, Filseth, and Young.[30]

h - Atkinson and Welge.[31]

i - Donovan and Husain.[32]

j - Fair and Thrush;[33] Fair, VanRoodselaar and Strausz;[34] Davis, Klemm, and Pilling;[35] Donovan and Little.[36]

TABLE 4

Experimental Rate Parameters for the

Reaction of $O(^3P)$ with OCS

A ($cm^3 molec^{-1} s^{-1}$)	E_{act} (cal/mole)	Temperature Range (°K)	Technique[a]
2.0×10^{-10}	5800	290-465	DF-ESR+MS/Hoyermann, Wagner and Wolfrum[2]
1.1×10^{-10}	5500	300-1150	DF-ESR/Homann, Krome, and Wagner[3]
$(3.2 \pm 1.1) \times 10^{-11}$	4530 ± 250	273-808	DF-ESR/Westenberg and deHaas[4]
1.62×10^{-11}	4500	298-523	SP-PA/Krezenski, Simonaitis and Heicklen[6]
$(2.0 \pm 0.3) \times 10^{-11}$	4270 ± 70	239-404	DF-ESR/Timmons and Wie[37]
$(1.65 \pm .13) \times 10^{-11}$	4305 ± 55	263-502	FP-RF/This study

a- DF: discharge flow; ESR: electron spin paramagnetic resonance; MS: mass spectrometry; SP-PA: steady state photolysis - product analysis; FP-RF: flash photolysis - resonance fluorescence.

Acknowledgements

The authors wish to express their appreciation to the following individuals who have contributed measurably to establishing the experimental apparatus utilized in this study: Dr. Mario Acuna, for designing the electronics which control the photomultiplier gate; Mr. Rich Bonanno for writing the computer program that reduces our experimental data and for designing and constructing the computer interface that permits the return of the reduced data to the lab; and Mr. E. Peter Gentieu for designing and debugging the multiplexer interface used to communicate with the computer. We also wish to thank Dr. Richard Timmons for making his results available prior to publication.

References

1. J. O. Sullivan and P. Warneck, Ber. Bunsenges. Physik. Chem. 69, 7 (1965).
2. K. H. Hoyermann, H. Gg. Wagner, and J. Wolfrum, Ber. Bunsenges. Physik. Chem. 71, 603 (1967).
3. K. H. Homann, G. Krome, and H. Gg. Wagner, Ber. Bunsenges. Physik. Chem. 72, 998 (1968).
4. A. A. Westenberg and N. deHaas, J. Chem. Phys. 50, 707 (1969).
5. W. H. Breckenridge and T. A. Miller, J. Chem. Phys. 56, 465 (1972).
6. D. C. Krezenski, R. Simonaitis and J. Heicklen, Int. J. Chem. Kinet. 3, 467 (1971).
7. For a thorough review of kinetic studies on the O + OCS reaction see: K. Schofield, J. Phys. and Chem. Ref. Data 2, 25 (1973).
8. W. H. Breckenridge and T. A. Miller, J. Chem.Phys. 56, 475 (1972); W. Braun, M. J. Kurylo, A. Kaldor and R. P. Wayne, J. Chem.Phys., In Press.
9. This observation differs from the conclusion of Schofield (reference 7). Moreover, the value for k_1 recommended by Schofield is 6.8×10^{-11} exp (-5080/RT) $cm^3 molec^{-1} s^{-1}$ which leads to rates for reaction (1) that agree with the present result only near 298°K.
10. W. Braun and M. Lenzi, Disc. Faraday Soc. 44, 252 (1967).
11. M. J. Kurylo, N. C. Peterson and W. Braun, J. Chem. Phys. 53, 2776 (1970).
12. M. J. Kurylo, N. C. Peterson and W. Braun, J. Chem. Phys. 54, 943 (1971).
13. B. A. Ridley, J. A. Davenport, L. J. Stief and K. H. Welge, J. Chem. Phys. 57, 520 (1972).

14. J. R. McNesby, W. Braun, and J. Ball, in "Creation and Detection of The Excited State," vol. 1 Part B, ed., A. A. Lamola, Marcel Dekker, Inc., New York, NY, 1971, pp. 503-586.

15. I. Koyano and K. H. Welge, private communication.

16. J. R. McNesby and H. Okabe, Adv. Photochem. 3, 157 (1964); G. M. Lawrence and M. J. McEwan, J. Geophys. Res. 78, 8314 (1973); B. A. Ridley, R. Atkinson and K. H. Welge, J. Chem. Phys. 58, 3878 (1973).

17. R. A. Back and D. W. L. Griffiths, J. Chem. Phys. 46, 4839 (1967).

18. D. Davis and W. Braun, Appl. Opt. 7, 2071 (1968).

19. F. C. Fehsenfeld, K. M. Evenson and H. P. Broida, Rev. Sci. Inst. 36, 294 (1965).

20. G. L. Pratt, "Gas Kinetics," Wiley, London, 1969, p. 210.

21. T. L. Isenhour and P. C. Jurs, "Introduction to Computer Programming for Chemists," Allyn and Bacon, Boston Mass., 1972, pp. 178-181; W. A. Wallis and H. V. Roberts, "Statistics: A New Approach," The Free Press, New York, NY, 1956, Chapter 17.

22. L. J. Stief, S. Glicker, and R. B. Klemm, manuscript in preparation.

23. R. J. Donovan, Trans. Faraday Soc. 65, 1419 (1969); R. J. Donovan, L. J. Kirsch and D. Husain, Nature 222, 1164 (1969).

24. R. F. Heidner, D.Husain, and J. R. Wiesenfeld, J.C.S. Faraday II 69, 927 (1973).

25. R. Gilpin, H. I. Schiff and K. H. Welge, J. Chem. Phys. 57, 1033 (1972).

26. J. F. Noxon, J. Chem. Phys. 52, 1852 (1970).

27. I. D. Clark and J. F. Noxon, J. Chem. Phys. 57, 1033 (1972).

28. R. F. Heidner and D. Husain, Int. J. Chem. Kinet. 6, 77 (1974).

29. L. J. Stief, W. A. Payne, and R. B. Klemm, manuscript in preparation.

30. O. J. Dunn, S. V. Filseth and R. A. Young, J. Chem. Phys. 59, 2892 (1973).

31. R. Atkinson and K. H. Welge, J. Chem. Phys. 57, 3689 (1972).

32. R. J. Donovan and D. Husain, Chem. Rev. 70, 489 (1970).

33. R. W. Fair and B. A. Thrush, Trans. Faraday Soc. 65, 1557 (1969).

34. R. W. Fair, A. VanRoodselaar and O. P. Strausz, Can. J. Chem. 49, 1659 (1971).

35. O. D. Davis, R. B. Klemm, and M. Pilling, Int. J. Chem. Kinet. 4, 367 (1972).

36. R. J. Donovan and D. J. Little. Chem. Phys. Lett. 13, 488 (1972).

37. R. B. Timmons and C.-N. Wie, unpublished results.

Figure Captions

Figure 1: Schematic of the Flash Photolysis-Resonance Fluorescence Apparatus: RC, reaction cell; VH, vacuum housing; FL, flash lamp; HVC, high voltage capacitor; HVPS, high voltage power supply; RL, resonance lamp; MG, microwave power generator; PM, photomultiplier tube; PD, photodiode trigger; LVD, low voltage discriminator; PA, pulse amplifier; MCA, multichannel analyzer; TTY, teletype; OLC, on-line computer.

Figure 2: Real-Time $O(^3P)$ Fluorescence Decay Signal: time base was 200 μsec per channel, 56 J flash energy, 298°K; "Diffusion" was 1.50 torr O_2/100 torr Ar mixture, 20 flashes, every 5th channel plotted; "Reaction" was .80 torr OCS/1.50 torr O_2/ 100 torr Ar mixture, 120 flashes, every channel plotted.

Figure 3: First-Order Decay of $O(^3P)$ Fluorescence Signal: data from Figure 2 with constant background subtracted and plotted semi-logarithmically, τ- "Diffusion is 19.6 msec and τ - "Reaction" is 2.56 msec, in each case the solid line is the least-squares fit of the data.

Figure 4: Variation of $O(^3P)$ Fluorescence Signal Level with Flash Energy (Atom Concentration): circles are 1.50 torr O_2/100 torr Ar mixture; squares are 1.00 torr OCS/1.00 torr O_2/50 torr He; 298°K.

Figure 5: Arrhenius Plot of Rate Data for the Reaction, $O(^3P)$ + OCS.

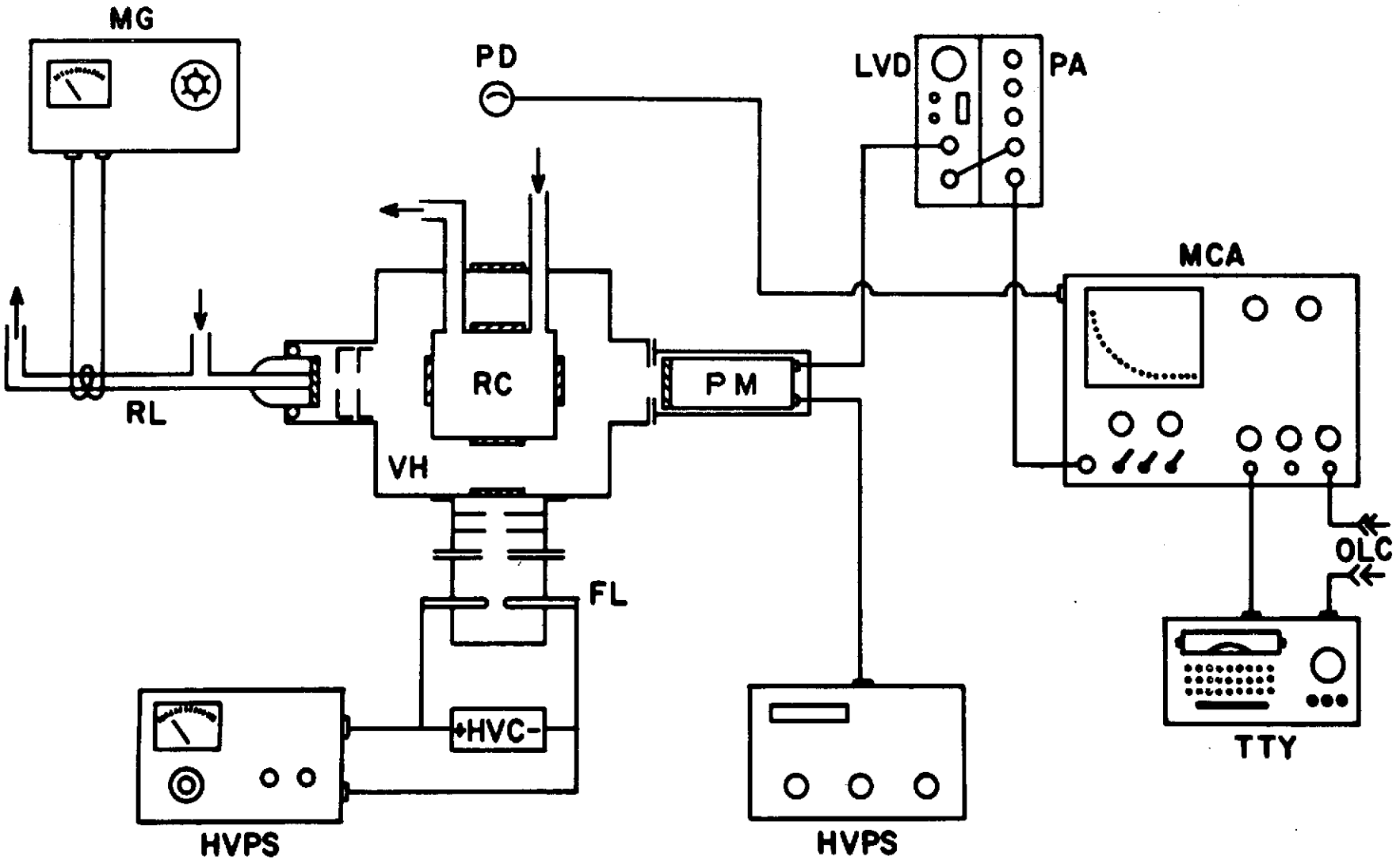

SCHEMATIC OF THE FLASH PHOTOLYSIS-RESONANCE FLUORESCENCE APPARATUS

FIGURE 1.

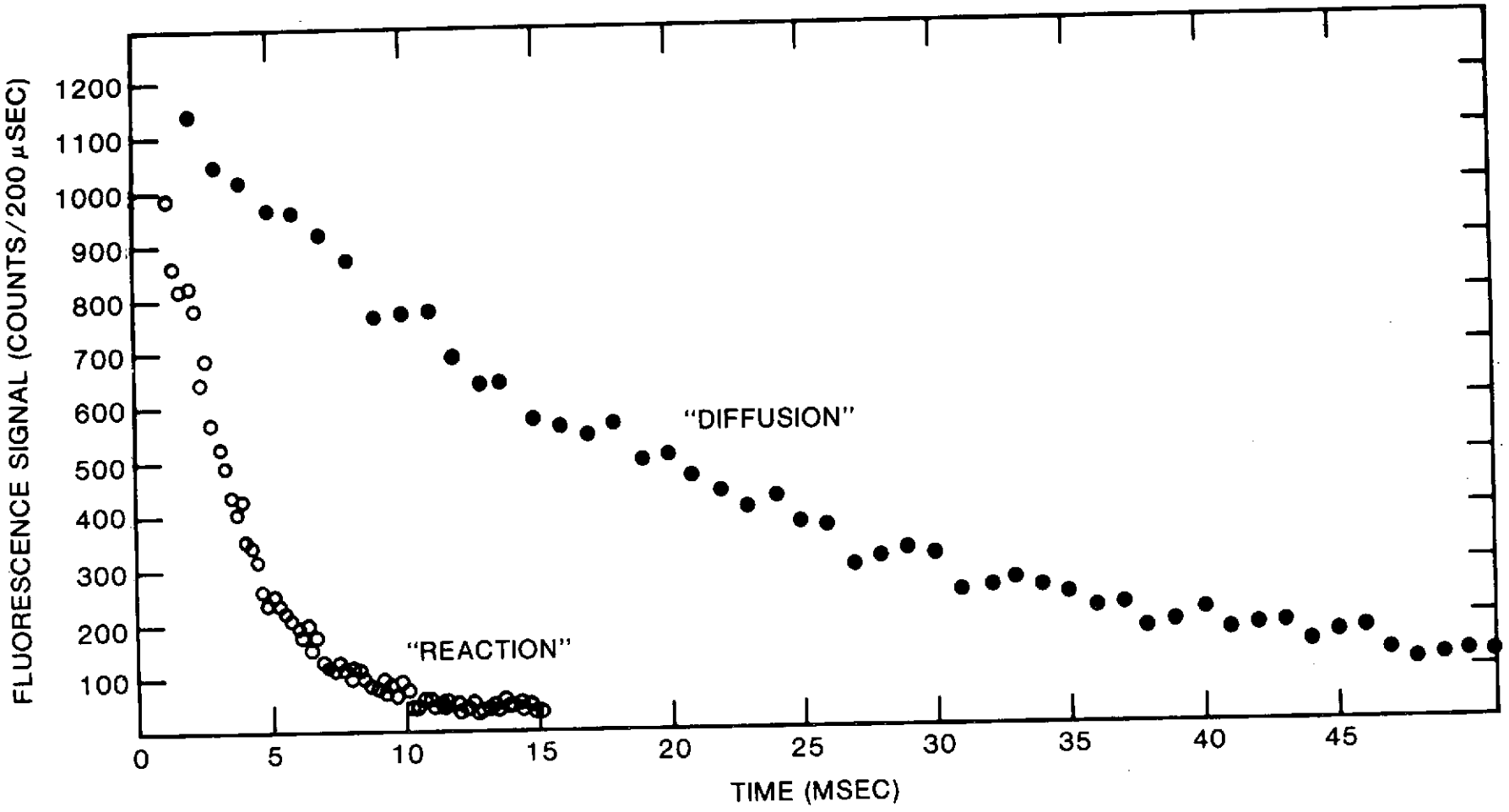
FLUORESCENCE SIGNAL (COUNTS/200 μSEC)
1200
1100
1000
900
800
700
600
500
400
300
200
100
0
5
10
15
20
25
30
35
40
45
TIME (MSEC)
"DIFFUSION"
"REACTION"

FIGURE 2.

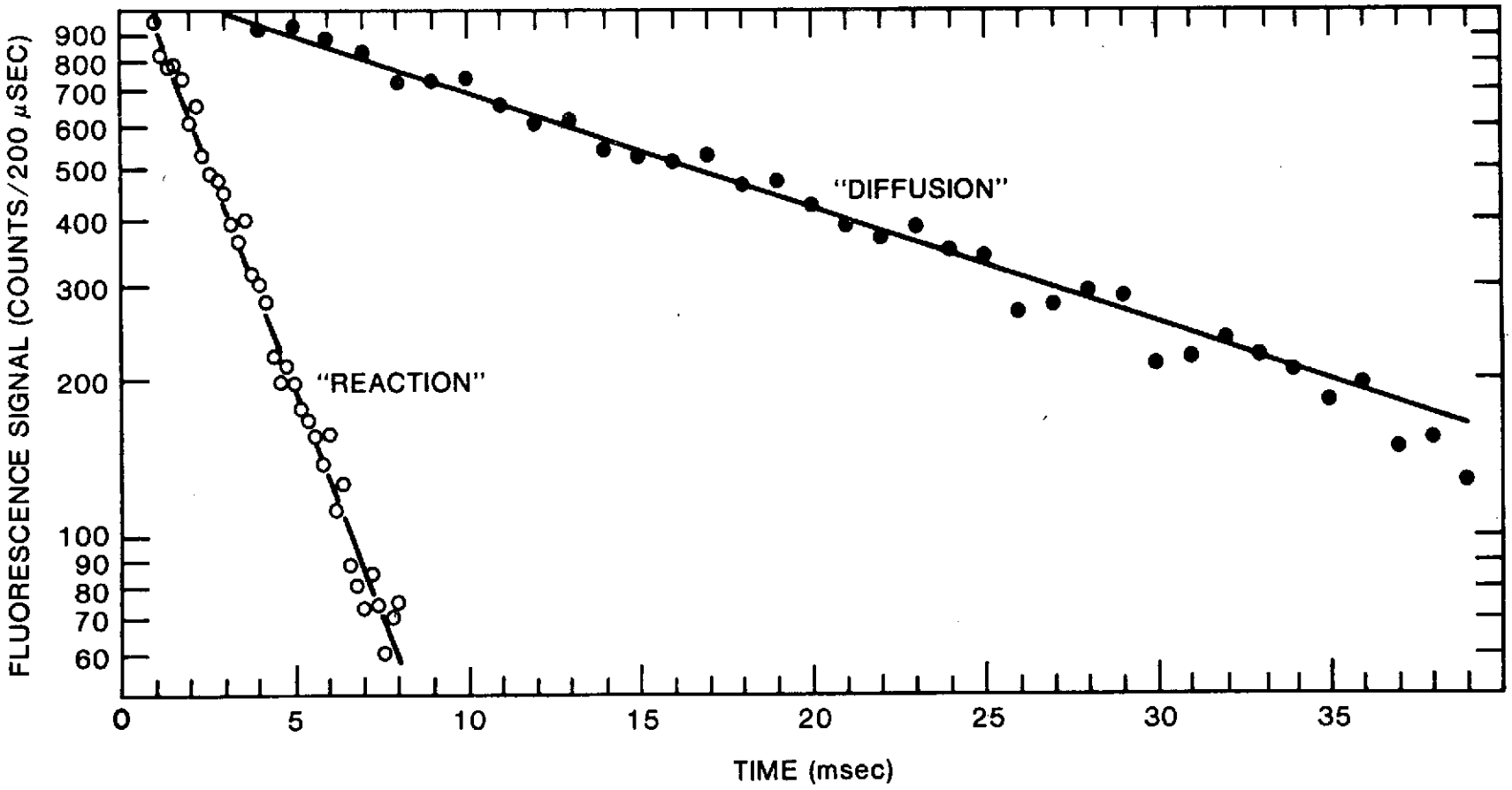
FLUORESCENCE SIGNAL (COUNTS/200 μSEC)
900
800
700
600
500
400
300
200
100
90
80
70
60
"DIFFUSION"
"REACTION"
0
5
10
15
20
25
30
35
TIME (msec)

FIGURE 3.

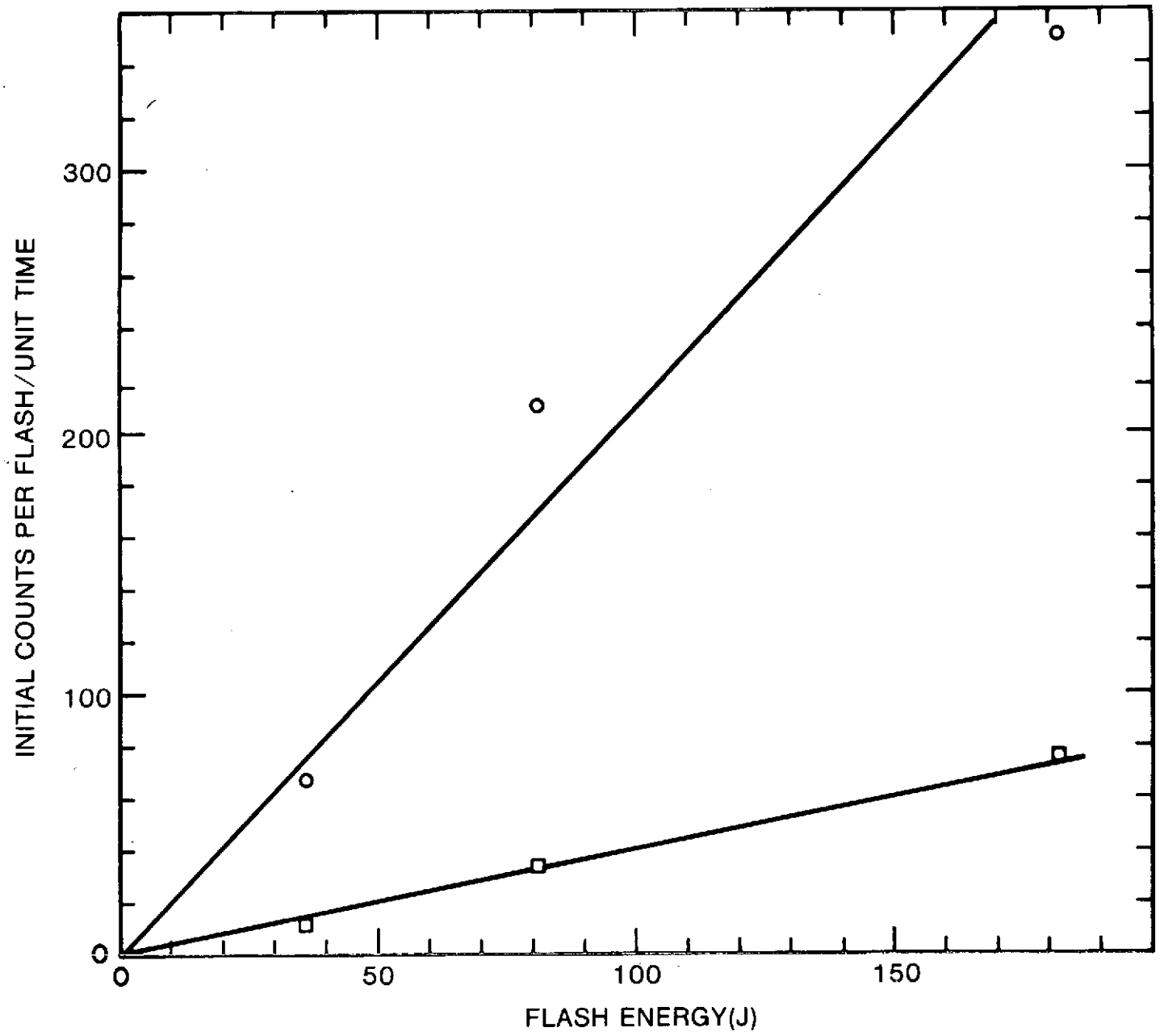
INITIAL COUNTS PER FLASH/UNIT TIME
300
200
100
0
0
50
100
150
FLASH ENERGY(J)

FIGURE 4.

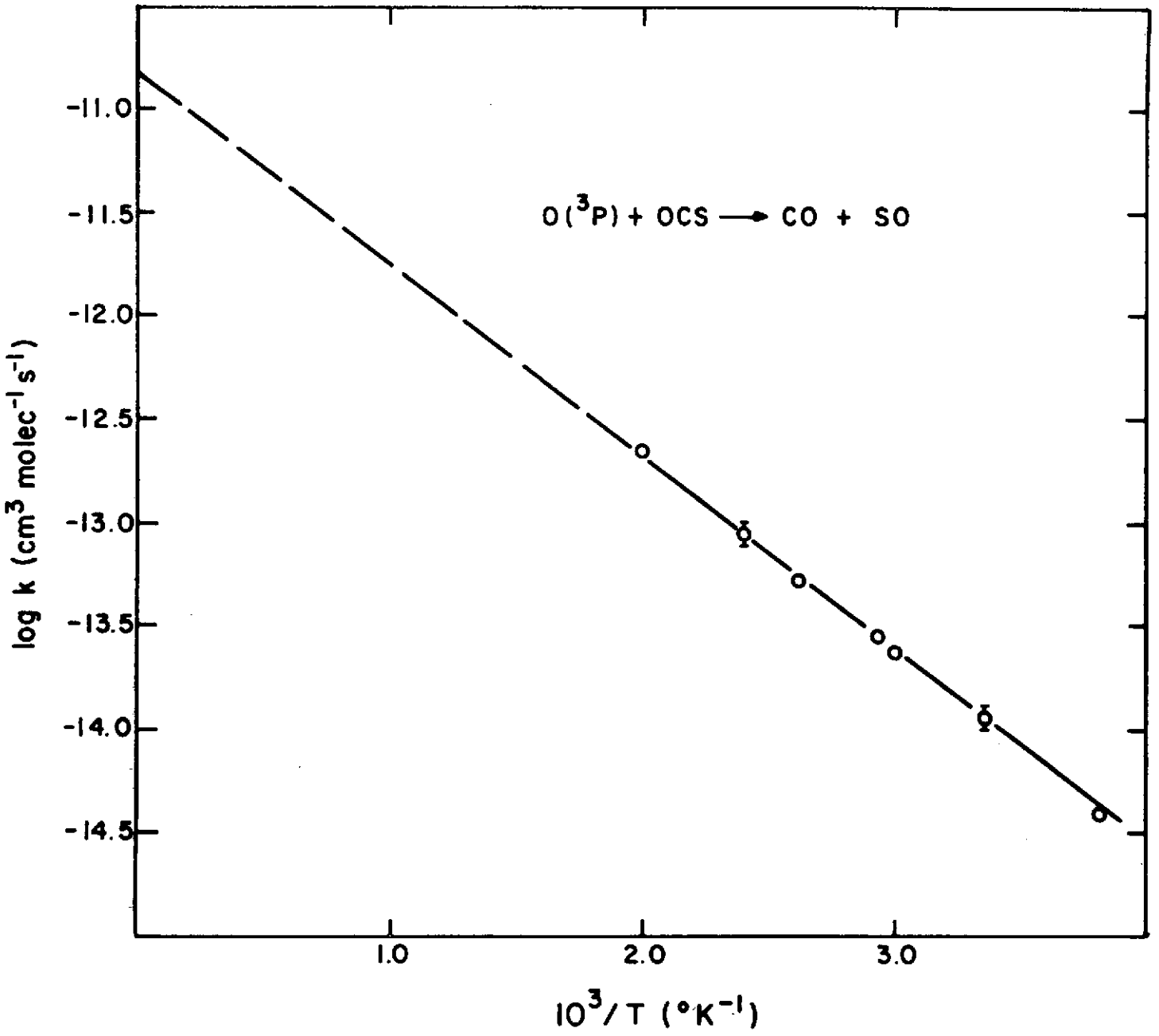

FIGURE 5.

NASA-GSFC