NASA CR-143652

Document No. 74SD4249
16 September 1974

SPACE DIVISION

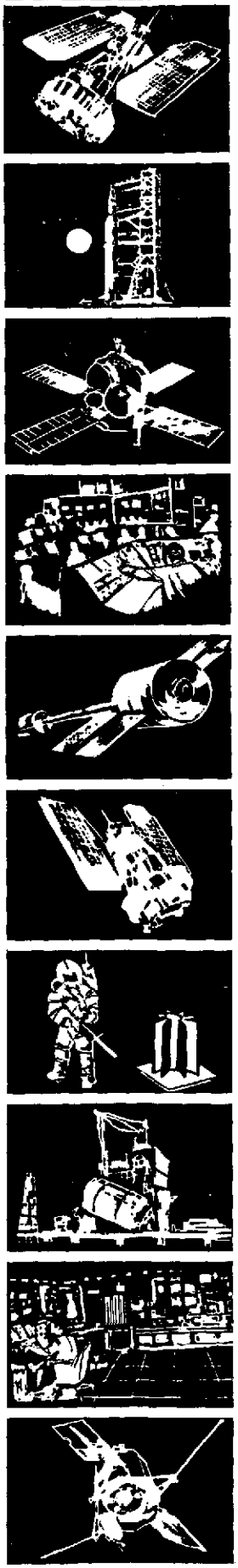

EARTH OBSERVATORY SATELLITE SYSTEM DEFINITION STUDY

Report No. 5
SYSTEM DESIGN AND SPECIFICATIONS

Volume 1
BASELINE SYSTEM DESCRIPTION

(NASA-CR-143652) EARTH OBSERVATORY SATELLITE SYSTEM DEFINITION STUDY. REPORT 5: SYSTEM DESIGN AND SPECIFICATIONS. VOLUME 1: BASELINE SYSTEM DESCRIPTION (General Electric Co.) 447 p HC $11.25 CSCL 22B

N75-15698

Unclas
G3/18 09235

Prepared for:
GODDARD SPACE FLIGHT CENTER
Greenbelt, Maryland 20771

Under
Contract No. NAS 5-20518

GENERAL ELECTRIC
SPACE DIVISION
Valley Forge Space Center
P. O. Box 8555 • Philadelphia, Penna. 19101

GENERAL ELECTRIC

PREFACE

This report, "Baseline System Design & Specifications," has been prepared for NASA/GSFC under contract NAS 5-20518, EOS System Definition Study. It describes the system design that has evolved through a series of design/cost tradeoffs to satisfy a spectrum of mission/system requirements. The basic spacecraft design is compatible with many missions. The EOS-A mission, the potential first mission, is used to define the mission peculiar elements of the system.

For convenience this report is bound in separate volumes as follows:

Volume 1	Baseline System Description
Volume 2	EOS-A System Specifications
Volume 3	General Purpose Spacecraft Segment and Module Specifications
Volume 4	Mission Peculiar Spacecraft Segment Specification
Volume 5	Operations Control Center Specification
Volume 6	Central Data Processing Facility Specification
Volume 7	Low Cost Ground Station Specification

Volume 1 "Baseline System Description" presents the overall EOS-A system design, a description of each subsystem for the spacecraft, and the major ground system elements. Volumes 2 through 7 present the specifications for the various elements of the EOS system and are organized according to the specification tree shown below:

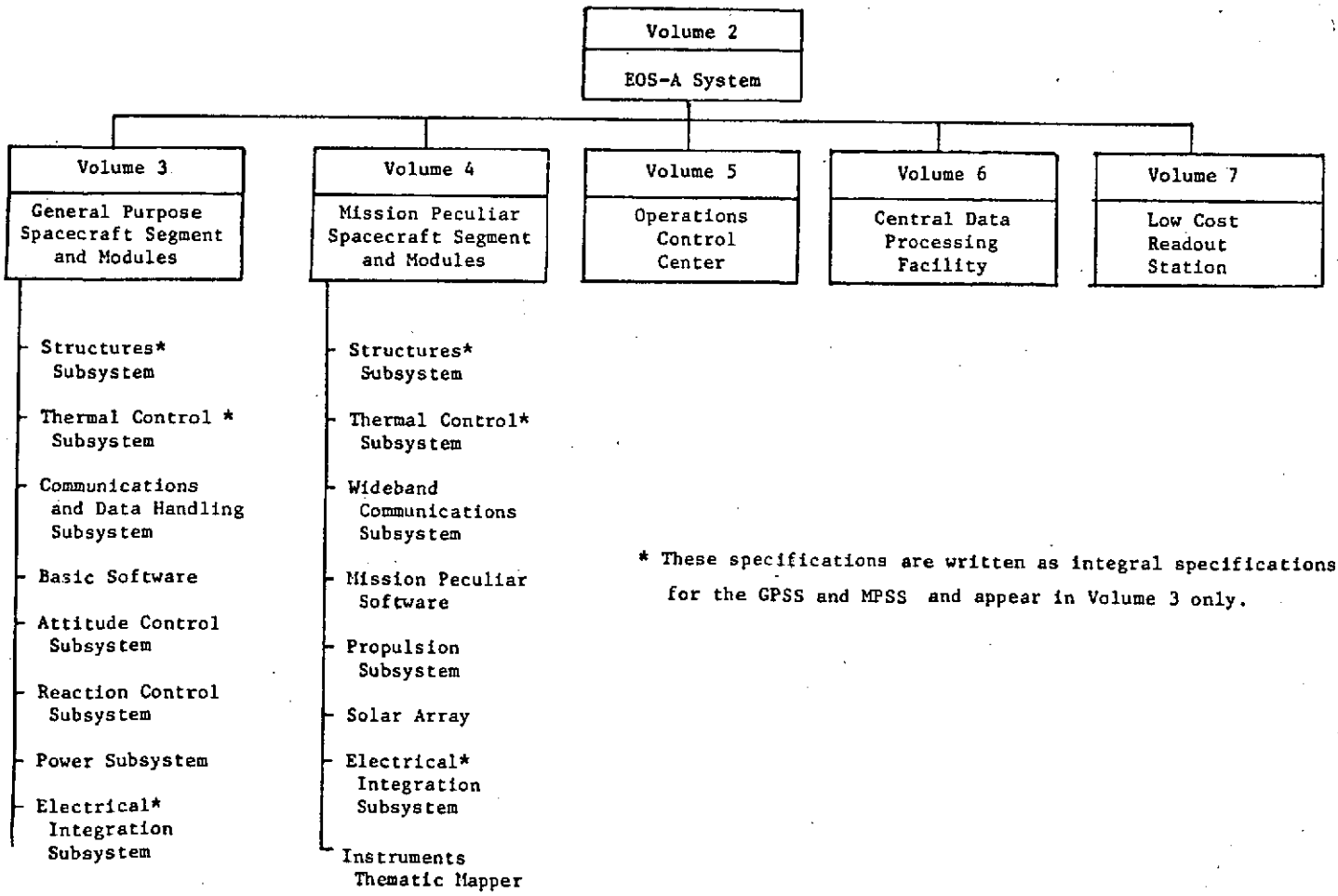

* These specifications are written as integral specifications for the GPSS and MPSS and appear in Volume 3 only.

TABLE OF CONTENTS

SECTION 1.0
INTRODUCTION

This volume defines and describes a system baseline design oriented to the requirements of the next generation of Earth Observatory Satellite missions. The first mission (EOS-A) is envisioned as a two-fold mission which (1) provides a continuum of data of the type being supplied by ERTS for the emerging operational applications and also (2) expands the research and development activities for future instrumentation and analysis techniques. The baseline system specifically satisfies the requirements of this first mission. However, EOS-A is expected to be the first of a series of earth observation missions. Thus the baseline design has been developed so as to accommodate these latter missions effectively as the transition is made from conventional, expendable launch vehicles and spacecraft to the Shuttle Space Transportation System era. Further, a subset of alternative missions requirements including Seasat, SEOS, SMM and MSS-5 have been analyzed to verify that the spacecraft design to serve a multi-mission role is economically sound.

A key feature of the baseline system design is the concept of a modular observatory system (Figure 1-1) whose elements are compatible with varying levels of launch vehicle capability. The design configuration can be used with either the Delta or Titan launch vehicles and will adapt readily to the Space Shuttle when that system becomes available in the early 1980's. The ability to match various launch vehicles to the required spacecraft weight and altitude for a given mission using a common multi-purpose spacecraft greatly improves mission economy and flexibility.

Commonality of the basic spacecraft modules for multiple mission use has been adopted to achieve low total costs. This concept utilizes a set of basic service subsystems whose design and performance support a variety of missions without redesign. By standardizing the mechanical configurations and electrical interfaces of the subsystem modules, and by designing each of them to be structurally and thermally independent entities, they have been configured to support mission-unique instruments and other payloads without redesign.

The modularity concept has been extended to provide for eventual on-orbit replacement of elements using the Space Shuttle in the 1980's. On-orbit service can be used either for

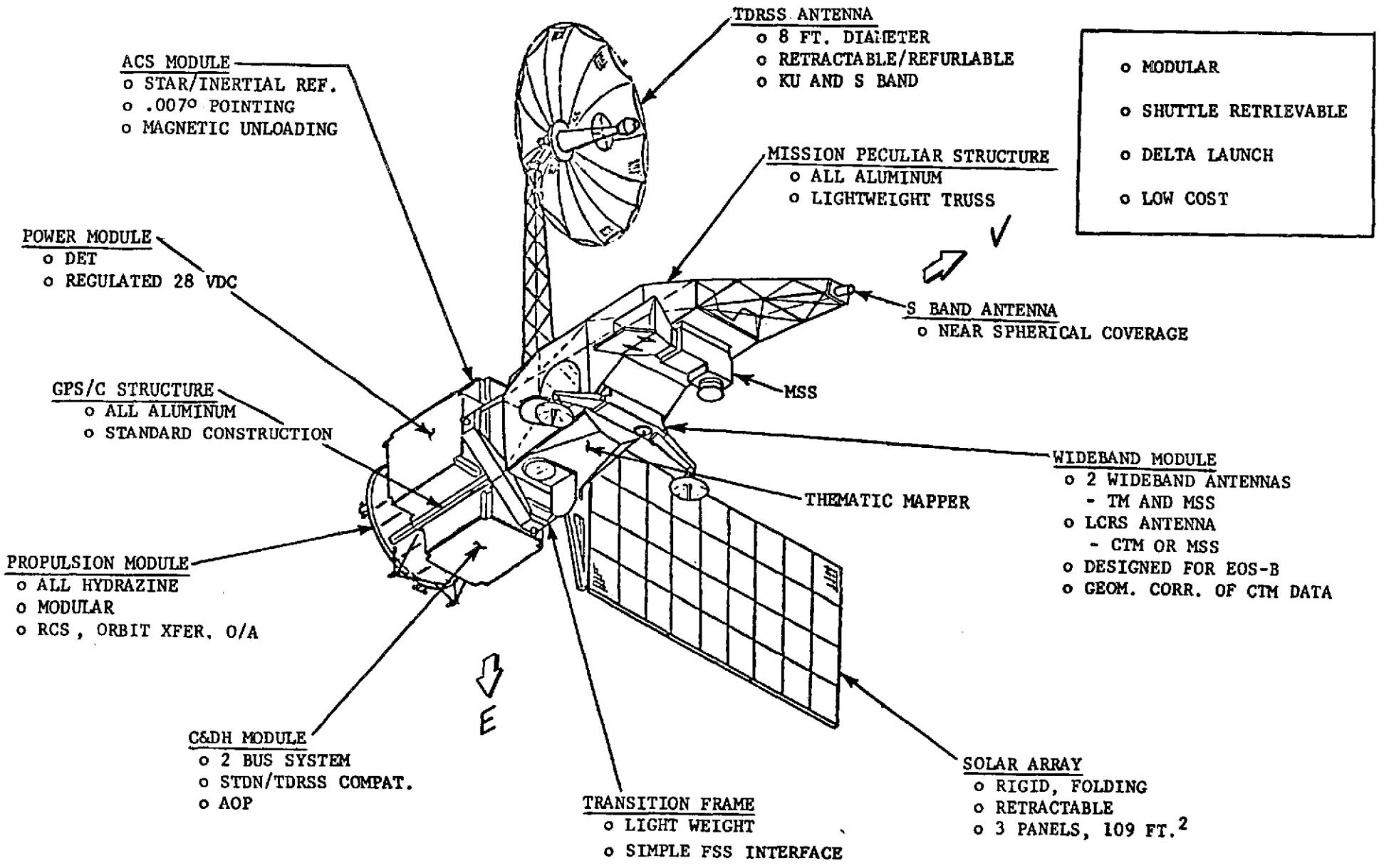

Figure 1-1 EOS-A Spacecraft

periodic maintenance or for replacement in case of failures. In addition, the spacecraft is retrievable by the shuttle for refurbishment on the ground. This further extends the economic benefits of the system design in the shuttle era.

The description of the baseline system design is organized into three major sections as follows:

Section 2.0 Mission Description develops the mission requirements for EOS-A, EOS follow-on and selected alternative missions as they relate to the capability and performance requirements of a multi-mission spacecraft. The more detailed system requirements and assumptions for the EOS-A mission are defined including those for the ground data processing system. The system design concept and overall configuration are summarized and the salient characteristics of the EOS-A and "driver" instruments for follow-on mission are included.

Section 3.0 Spacecraft Description details the recommended baseline designs for a flexible, modular, multimission spacecraft. The adaptability of this basic design to accommodate alternative missions is addressed in each subsystem area. The overall EOS-A configuration, including a description of the mission peculiar spacecraft elements, is discussed. Finally, a variety of follow-on mission configurations are presented to demonstrate the multimission flexibility.

Section 4.0 EOS Ground System Description defines the necessary data acquisition and other support elements required for the series of EOS missions. Baseline designs are described for the Operations Control Center, the Central Data Processing Facility and a low cost Ground Station. The Central Data Processing Facility Design is configured to ultimately support the processing of data for the EOS-B mission.

SECTION 2.0

MISSION REQUIREMENTS AND SYSTEM DESCRIPTION

The baseline system design was evolved after a series of design/cost trade-offs against a set of mission/system requirements and guidelines provided by GSFC. This section summarizes the principle or driving requirements and the salient system characteristics which have evolved.

2.1 MULTIPLE MISSION REQUIREMENTS AND OBJECTIVES

The Earth Observatory Satellite (EOS) Program concept includes an economical, multipurpose, modular spacecraft and ground processing system to support observation missions throughout the next decade. These observation missions will support: 1) the Application System Verification Tests (ASVT'S) identified by the Office of Applications and the Interagency Coordinating Committee Earth Resources Survey Program; 2) research and development activities within the technical disciplines; and 3) operational information generation requirements. The basic spacecraft design is also compatible with other mission requirements. Typical missions that could utilize the EOS spacecraft are SMM, Seasat, ERS and SEOS.

The mission matrix (Table 2-1) summarizes the missions considered and identifies the salient requirements that each impose on the multipurpose spacecraft design. The relative design influence of the mission matrix on the spacecraft design and performance is most sensitive for the EOS series of missions. This results largely from the type of instruments required for these missions. The commonality of requirements across each row of the matrix are evident and have been used to set subsystem functional and performance requirements to cost effectively satisfy the entire mission matrix.

Initial EOS missions include the 5 Band MSS instrument program to provide a continuum of standard data to the neo-operational resource management programs. A higher resolution multichannel radiometer (Thematic Mapper) will provide the experimental transition into the next generation of remote sensing applications. After the Thematic Mapper has been phased-in and established as the contiguous, synoptic coverage workhorse, a High Resolution Pointable Imager (HRPI) will be introduced to provide higher resolution, increased access-time data. All-weather instruments (radars and microwave

Table 2-1. EOS Multiple Mission Data

SYSTEM		EOS A & A'	EOS FOLLOW-ON: OCEANOGRAPHY METEROLOGY MISSION	EOS FOLLOW-ON: ALL WEATHER OBSERVATORY	SHUTTLE RESUPPLY DEMONSTRATION TEST FLIGHT	SEOS	SOLAR MAX	SEASAT-A	SEASAT-B
MISSION		PROVIDE CONTINUED OPERATION GATHERING OF EARTH RESOURCES DATA USING THE MSS INSTRUMENT. DEVELOP ON ADVANCED INSTRUMENT WHICH CAN PROVIDE MULTIPSECTRAL IMAGERY OF THE LAND SURFACE AT SIGNIFICANTLY IMPROVED SPATIAL AND SPECTRAL RESOLUTIONS OVER ERTS. STUDY DIRECTION IN WHICH OPERATIONAL LAND USE INVENTORY AND EARTH RESOURCE MANAGEMENT PROGRAMS SHOULD PROCEED.	PERFORM RESEARCH IN THE PRIORITY PROBLEMS OF OCEANOGRAPHY AND METEOROLOGY, ESPECIALLY THOSE ASSOCAITED WITH AN IMPROVED DATA BASE FOR LONG RANGE WEATHER FORECASTING AND FOR OCEAN RESOURCE MODELING.	DEVELOP ALL WEATHER CAPABILITY FOR BOTH ATMOSPHERIC STRUCTURE DETERMINATION AND SURFACE OBSERVATION.	VERIFY EOS COMPATIBILITY WITH THE SHUTTLE CAPABILITY FOR LAUNCH RESUPPLY AND RETRIEVAL. FINAL "SHAKE-DOWN" OF COMBINED SHUTTLE, THE RESUPPLIABLE OBSERVATORY AND THE FLIGHT SUPPORT SYSTEM.	DEVELOP REMOTE SENSING TECHNOLOGY FOR MEASUREMENT OF EARTH'S TRANSIENT ENVIRONMENT FROM SYNCHRONOUS ALTITUDE.	INVESTIGATE FLARES AND RELATED PHENOMENA AND THEIR EFFECTS ON THE SOLAR-TERRESTRIAL SYSTEM THROUGH A WELL COORDINATED SET OF UNIQUE INSTRUMENTATION FOR OBSERVING TRANSIENT ULTRAVIOLET, HIGH-ENERGY AND VISIBLE RADIATION.	GLOBAL SCALE MONITORING OF WIDE RANGE OF PHYSICAL OCEAN PHENOMENA; SEA STATE CURRENTS, CIRCULATION, TIDES, WIND STRESS AND GEOID UNDULATIONS. DEMONSTRATE KEY FEATURES OF OPERATIONAL SYSTEM.	GLOBAL SCALE MONITORING OF WIDE RANGE OF PHYSICAL OCEAN PHENOMENA; SEA STATE CURRENTS, CIRCULATION, TIDES, WIND STRESS AND GEOID UNDULATIONS.
PAYLOAD		MULTISPECTRAL SCANNER (SCANNER: 1.77 x 1.95 x 1.42; 127) (MULTIPLEXER: 0.33 x 0.5 x 0.54; 7.5) THEMATIC MAPPER (x x ; 320) DATA COLLECTION SYSTEM (1 x 1 x 2; 77)	PASSIVE MULTICHANNEL MICROWAVE RADIOMETER (*79 FT^3; 200) ADVANCED ATMOSPHERIC SOUNDER (1.5 x 2.3; 100) RADIOMETRIC SCATTEROMETER (ELECTRONICS: 1 x 1 x 1 ANTENNA: 3.28 dia x 1.64; Total wts = 115) LIMB ATMOSPHERIC COMPOSITION PROFILIER (1.33 dia x 5 1/4; 168) ADVANCED MAPS (1.2 x 0.75 x 0.67; 80) OCEAN SCANNING SPECTROPHOTOMETER (2.16 x 1.46 x 0.75; 60)	SYNTHETIC APERTURE RADAR (ANTENNA: 27 x 2.5 x 1; ELECTRONICS: 5.1 FT^3; TOTAL WEIGHT = 387 LBS) THEMATIC MAPPER (3 x 3 x 7, ≤ 600)	* ENGINEERING MODEL HARDWARE OR BACKUP PAYLOADS FOR EOS-A.	4.9 FT DIAMETER (CASSAGRAIN) TELESCOPE ASSY. WITH VISIBLE, NEAR IR & THERMAL IR DETECTORS. RESOLUTION BETTER THAN 100 m VISIBLE AND NEAR IR, APPROX. 1000 m IN THERMAL IR. (TELESCOPE: 6.55 dia. x 13.1; 1144) (SENSOR ASSY: 6.73 dia x 3.3; 320) DATA COLLECTION SYSTEM (ANTENNA: 1.24 x 1.24 x 1; 31) (ELECTRONICS VOL: 1.32 FT^3; 44)	MINIMUM PAYLOAD: UV MAGNETOGRAPH (0.58x0.84x6; 100) EUV SPECTROMETER (0.84x0.84x6; 100) HIGH RESOLUTION X-RAY SPECTROMETER (0.54 x 0.84 x 6.5; 100) HARD X-RAY IMAGING (0.5x0.42x6.5; 100) LOW/MEDIUM X-RAY POLARIMETER (0.67 x 0.67 x 3; 16) GAMMA RAY DETECTOR (1.5x1.5x3; 200) H-ALPHA PHOTOMETER (0.33x0.33x3; 20) FLARE FINDER (0.33 x 0.33 x 6; 30) ADDITIONAL SENSORS: IN ORDER OF IMPORTANCE ARE: HARD X-RAY SPECTRO. (1 x 1 x 3; 70) SOLID STATE X-RAY DETEC. (1x1x1; 20) CORONOGRAPH (0.42 x 1 x 6; 100) UV SPECTROMETER (0.67 x 1 x 6; 110) NEUTRON DETECTOR (0.83x1.67x3; 205)	RADAR ALTIMETER (3.28 DIA; 99)* 5-CHANNEL MICROWAVE SCANNING RADIOMET. (4.1 DIA; 110)* DUAL FREQUENCY SCATTEROMETER (5 at 8.8 LENGTH; 385)* VISIBLE & SCANNING RADIOMETER (2 x 3 x 2; 22)* ** SAR	ALTIMETER - K-BAND (0.66 x 0.66 x 1.64; 100) SCATTEROMETER - K-BAND (3.6 x 4.92 x 3.28; 200) IR SCANNER (3.28 x 3.28 x 3.96; 95) SATELLITE TO GROUND TRANSPONDER (0.82 x 0.66 x 0.66; 17.6) SATEL.-TO-SATEL. TRANSPONDER (1 x 2 x 2; 88) RETRO REFLECTORS (2 x 0.1 x 1.5; 44) COHERENT RADAR ALTIMETER (1 x 3.28 x 3.28; 161) *SAR
ORBIT	ALTITUDE	418* nm	450 nm	418 nm	300 nm	19,323 nm	285 nm	430 nm	324 nm
	INCLINATION	98.5° Sun Synchronous	98.76° SUN SYNCHRONOUS	98.5° SUN SYNCHRONOUS	28.5°	2° GEOSYNCHROSOUS	30°	108 DEG	90°
	ACS MODE TIME	2330	1200	2330	NOT CRITICAL	N/A - POSITIONED AT 96° W. LONGITUDE	N/A	N/A	N/A
POWER	TYPE	ONE SINGLE AXIS ORIENTED SOLAR ARRAY	ONE SINGLE AXIS ORIENTED SOLAR ARRAY	ONE SINGLE AXIS ORIENTED SOLAR ARRAY	ONE SINGLE AXIS ORIENTED SOLAR ARRAY OR BATTERY POWER	DUAL SINGLE AXIS ORIENTED SOLAR ARRAY	DUAL FIXED ARRAY	ORIENTED SOLAR ARRAY (TWO AXIS)	FIXED BODY MOUNTED SOLAR CELLS, OR SINGLE AXIS ARRAY + FIXED ARRAY, OR 2 AXIS ORIENTED ARRAY
	POWER LEVEL	500 w AVERAGE	550 w AVERAGE	** 450 w AVERAGE	500 w AVERAGE	400 w AVERAGE	235 w AVERAGE	465 w	375 w AVERAGE
ACS	REFERENCE	STELLAR	STELLAR	STELLAR	STELLAR	STELLAR	SOLAR/STELLAR	EARTH	EARTH
	TYPE	3 AXIS, ZERO MOMENTUM	3 AXIS, ZERO MOMENTUM	3 AXIS, ZERO MOMENTUM	3 AXIS, ZERO MOMENTUM	3 AXIS, ZERO MOMENTUM	* 3 AXIS, ZERO MOMENTUM	3 AXIS, ZERO MOMENTUM	3 AXIS GRA GRAD. WITH MOMENTUM WHEEL SUN & HORIZON SENSORS
	ACCUR. POINT	0.007 DEG	0.05 DEG	0.05 DEG	0.007 DEG	0.017 DEG	1.2 SEC WITH FLARE FINDER; 1 MIN W/OUT	0.5 DEG	2 DEG
	ACCUR. RATE	5×10^{-5} DEG/SEC	6.7×10^{-4} DEG/SEC	3.6×10^{-4} DEG/SEC	5×10^{-5} DEG/SEC	$* 10^{-5}$ DEG/SEC	1 SEC OVER 5 MIN WITH FLARE FINDER	--	0.002 DEG/SEC
	ACCUR. KNOW.	0.007 DEG	0.05 DEG	0.05 DEG	0.007 DEG	0.0017 DEG	< 5 SEC FROM FLARE FINDER	0.2 DEG	0.1 DEG
WIDE-BAND DATA	RATE	135 Mbps MAX	2.5 MBPS	TWO 120 MBPS CHANNELS	NO	10 MBPS	128 KBPS	**1.6 MBPS	90 MBPS
	ON-BOARD STORAGE	OPTION TO TDRS	OPTIONS TO TDRS	OPTIONS TO TDRS	TELEMETRY ONLY	NO	YES (OR TDRS)	YES	YES
LAUNCH VEHICLE		DELTA 2910		* DELTA / TITAN	SHUTTLE-DIRECT	SHUTTLE	DELTA	DELTA	SHUTTLE-DIRECT
TUG	TYPE	INTEGRAL	INTEGRAL	INTEGRAL / INTEGRAL	NOT REQUIRED	NON INTEGRAL SPACE TUG	NOT REQUIRED	NOT REQUIRED	NOT REQUIRED
	PROP. TYPE	HYDRAZINE	HYDRAZINE	HYDRAZINE / HYDRAZ/SOLIDS	—	HYDRAZINE	—	—	—
	NEED FOR ORBIT ADJU.	YES	NO	YES / YES	NO	YES	NO	YES	NO
SPACECRAFT CHARACTERISTICS	WEIGHT ON ORBIT	2350	2400 LBS	2500 LBS / 4000 LBS	6500 LBS	2716 LBS	*** 2534 LBS	2050	2230 LBS
	LENGTH	16 FT	18 FT	18 FT / 21 FT	27 FT	22.7 FT	** 14 FT	13 FT	15 FT
	DIAMETER	7 FT	7 FT	7 FT / 9 FT	9 FT	10.7 FT	** 7 FT	7 FT	13 FT
LAUNCH DATES		EOS-A - 1979 EOS-B - 1980	1980	1981	1980	1981	1978	1977	1982
LIFETIME	LIFETIME	2 YEARS	2 YEARS	2 YEARS	7 DAYS	2 YEARS	2 YEAR	1 YEAR	5 YEARS
	RETRIEVE	RETRIEVE 1983	RETRIEVE 1983 / RETRIEVE/REFURBISH 1983	RETRIEVE 1983 / RETRIEVE/RESUPPLY 1983	RETRIEVE IS PART OF MISSION	RESUPPLY EVERY TWO YEARS	RETRIEVE EVERY TWO YEARS	NO RETRIEVE	NO RETRIEVE
NOTES		* EOS-A PROVIDES 17 DAY REPEAT CYCLE EOS-A' TO BE PHASED WITH EOS-A TO PROVIDE 8/9 DAY REPEAT	*INCLUDES TWO 3.6 FT DIAMETER SCANNING ANTENNAS. **DELTA CONFIGURATION WILL CARRY THE PMMR, AS MANY OTHER INSTRUMENTS AS POSSIBLE BUT NOT THE RADIOMETER SCATTEROMETER.	* DELTA 2910 CONFIGURATION WILL CARRY ONLY THE SAR; DELTA 3910 REQUIRED FOR SAR PLUS TM. **1250 WATTS PEAK POWER FOR 10 MIN REQUIRED FOR THE SAR.	*ASSUME PAYLOADS TO BE TURNED ON AND IMAGERY ACQUIRED TO SUPPORT FULL UP SHUTTLE AND SPACECRAFT COMPATIBILITY TEST MISSION. MORE LIKELY MISSION WILL HAVE MINIMUM S/C CAPABILITY (NO OPERATING PAYLOADS, NO SOLAR ARRAY)	SYSTEM MUST BE CAPABLE OF PROVIDING TEN 70 MILIRADIOM (4°) SCANS PER HOUR TO SCAN THE EARTH AT CONSTANT SUN ELEVATION.	*10 MIN SLEW IN ONE AXIS FOLLOWED BY 10 MIN SLEW IN SECOND AXIS IN 30 SECONDS TOTAL IS REQUIRED. SLEW BASED ON ERROR SIGNALS FROM FLARE FINDER SENSOR. **END VIEWING CONFIGURATION. ***WEIGHT CORRESPONDS TO MINIMUM PAYLOAD.	* SIZES OF ANTENNAS ONLY, WEIGHTS ARE ENTIRE SUBSYSTEMS ** POTENTIAL ADDITION OF SAR COULD HAVE MAJOR IMPACT ON SENSOR COMPLIMENT AND SPACECRAFT CONFIGURATION. *** DOES NOT INCLUDE PROVISIONS FOR SAR	*POTENTIAL ADDITION OF SAR COULD HAVE MAJOR IMPACT ON SENSOR COMPLIMENT AND SPACECRAFT CONFIGURATION.
REFERENCES		EOS SYSTEM DEFINITION STUDY RESULTS	INTERNAL GE CONCEPTUAL EOS-B PAYLOAD	INTERNAL GE CONCEPTUAL EOS-C PAYLOAD	"EOS REQUIREMENTS FOR EARLY SHUTTLE FLIGHTS", GSFC MAY 1973	"SSPD DATA SHEETS, EO-09-A" 10/9/73	"SOLAR MAXIMUM MISSION CONCEPTUAL STUDY REPORT X-073-74-42" GSFC, JAN 1974	"SEASAT TASK TEAM REPORT" "SEASAT SOURCE VERIFICATION STUDY," GE FINAL REPORT, 4/8/74	"SSPD DATA SHEETS OP-07-A" REV. 10/15/73

radiometers) will be flown on later missions.

2.1.1 EOS-A MISSION REQUIREMENTS

The initial mission in the EOS series is a combined operational/R&D mission. The operational mission uses the developed 5 band MSS as the principle instrument to provide data continuity following ERTS-C to support the emerging operational applications. The R&D mission is oriented to Land Resource Management development. This mission will develop advanced instruments and processing systems which can provide multispectral imagery of the land surface of the earth at significantly improved spatial and spectral resolutions than the operational portion of the system.

The principle EOS-A mission requirements and assumptions are outlined in Table 2-2. Although many are not quantitive, they reflect the current general mission requirements against which the EOS-A baseline system has been developed.

2.2 EOS-A SYSTEM REQUIREMENTS AND CONSTRAINTS

The baseline system design has evolved from a series of design/cost trade-offs to satisfy performance requirements derived from the EOS-A and other follow-on and alternative missions. It is also configured to be compatible with the set of baseline system constraints/guidelines given in Table 2-3. These constraints and guidelines have been developed through a combination of system studies and consultations with the GSFC EOS Project. Discussion of several aspects of these follow:

Configuration Two identical spacecraft, EOS-A and A′, provide the capability to decrease the time between repeated coverage of the same scene by operating the two spacecraft in properly phased orbits. A catastrophic failure of one spacecraft still allows data continuity, although not as frequently as desired. Alternative possibilities are to alter the instrument and orbit characteristics to provide more frequent coverage from a single spacecraft, use a pointable instrument for cloud avoidance or to equip a single spacecraft with multiple instruments.

Payload The existing MSS can be modified reasonably easily to operate at a lower orbit compatible with R&D and future operational instrument requirements.

Table 2-2. EOS-A Mission Requirements/Assumptions

CHARACTERISTIC	OPERATIONAL MISSION REQUIREMENT	R&D MISSION REQUIREMENT
Instruments	Maintain current 5-band MSS instrument & data characteristics	TM is first R&D instrument launched on same spacecraft as MSS. When TM becomes operational, HRPI becomes next R&D instrument. SAR, PMMR future R&D instruments.
Orbit	Constant observation conditions with relatively high solar zenith angle	Same
Coverage:		
Swath	Nominally 185 km	Same
Frequency	≤18 day repetitive observations, 7 to 9 day observation interval highly desirable	Same
Area	Global capability; direct transmission to NASA STDN or to international ground stations; via TDRS outside the range of the STDN stations	Same
Local User	Not required	Reduced bandwidth (~15 Mbps) TM data direct to low cost local user ground stations. Bandwidth reduction by selected spectral bands, lower resolution and/or reduced swath width.
Frequency Allocation	Within those for R&D mission	225 MHz bandwidth to TDRS at Ku-Band 375 MHz bandwidth to STDN (and local users) at X-Band
Data Processing	At GSFC using same facility as for ERTS-C; no overlap between ERTS-C and EOS-A Data Processing	At GSFC using new/modified facility initially (EOS-A) for TM only, ultimately for both TM and HRPI (EOS-B); thruput of ~175 scenes (observations) per day each for TM & HRPI data; master digital products to Souix Falls (DOI) and other agencies, data products to ~30 principal investigators
Timeliness of Data	Consistent with DOMSAT relay of raw data (at reduced rate) from STDN acquisition stations to GSFC & processed data from GSFC to Souix Falls	Same
Mission Duration	Spacecraft/instrument life of 2 years	Same
Launch Date	EOS-A in first quarter of 1979 EOS-A' in first quarter of 1980 EOS-B in first quarter of 1981 EOS-B' in first quarter of 1982	Same

Table 2-3. Baseline System Constraints/Guidelines

Characteristic	Constraint/Guideline
Configuration	Two identical spacecraft to perform EOS-A and A′ missions.
Payload	One 5-Band MSS modified for lower altitude; One 6-Band TM with 30 m IFOV, 40 m system resolution; Both instruments nadir looking with 185 KM swath.
Spacecraft	Capability for shuttle retrieve, no resupply; TDRSS capability as baseline, WBVTR's as alternate; Conventional aft adapter; Modularity at subsystem level; Propulsion for retrieve at 330 nmi, back-up retrieval at mission altitude
Launch Vehicle	Delta 2910
Ground Stations STDN TDRSS	 NTTF, Goldstone and Alaska White Sands
Control Center	At GSFC using Modified facility
Orbit Altitude	Compatable with both EOS-A and B missions; Direct shuttle access
Inclination	Sun synchronous
Node Time	1100 (descending) nominal
Launch Window	30 minute (1100 to 1130)

These modifications will maintain its current spectral characteristics, approximately the same swath (185 KM), IFOV and data rate and improved SNR. The TM will provide additional and revised spectral bands and significantly improved spatial resolution for R&D purposes. Identical coverage of the same nadir swath will aid in simplifying data screening, processing and cataloging. One alternative considered is to cant the MSS and TM to view adjacent subsatellite swaths and select an orbit altitude to increase coverage by alternatively observing the same scene first with the MSS, then TM, etc. The advantage of more frequent temporal coverage is countered by the additional complexity to the user in relative change detection by introducing many additional variables

caused by using two types of instrument data.

Launch Vehicle The Delta 2910 provides adequate weight margin for the defined EOS A payload and spacecraft design as well as many of the follow-on mission possibilities. Alternative spacecraft configurations with combined instruments and more ambitious payloads require alternative launch vehicles.

Orbit Altitude The orbit altitude selected for EOS-A must consider follow-on instruments (i.e. HRPI) and shuttle performance capability for polar orbit so as to preclude redevelopment of R&D instruments for future operational use.

The major EOS-A system performance requirements influence the design of the basic spacecraft and govern the design of the mission peculiar spacecraft and ground data processing facility design. These requirements are definitized in the "EOS-A System Specification" (Volume II of this Report).

2.3 EOS SYSTEM CONFIGURATION

The overall system configuration applicable to the EOS-A and follow-on missions is illustrated in Figure 2-1. The observatory uses the standard modular spacecraft bus to accommodate the MSS and TM instruments and related mission peculiar equipment. Two pointable X-band antennae transmit TM and MSS data direct to STDN or International ground stations. The two identical links facilitate station handovers and provide the capability to transmit full data to more than one station simultaneously as might be required, for example, over North America when transmitting to both the Alaska (STDN) and Prince Albert (Canadian) Stations. Combined TM and MSS data may also be transmitted at Ku Band through an unfurlable 8 foot oriented dish and relayed via TDRS when the spacecraft is beyond the view of one of the STDN stations. Selected, reduced bandwidth TM data (compacted data) is transmitted via a fixed, earth-oriented, shaped beam antenna to any of the low cost local user stations. After recording at the ground station, payload data may be played back at reduced rate and relayed to GSFC for processing via DOMSAT. Physical delivery of tapes is available as a back-up.

Spacecraft telemetry, tracking and command data are transmitted and received at S-Band. Full two-way capability exists either through the spacecraft omni antenna and

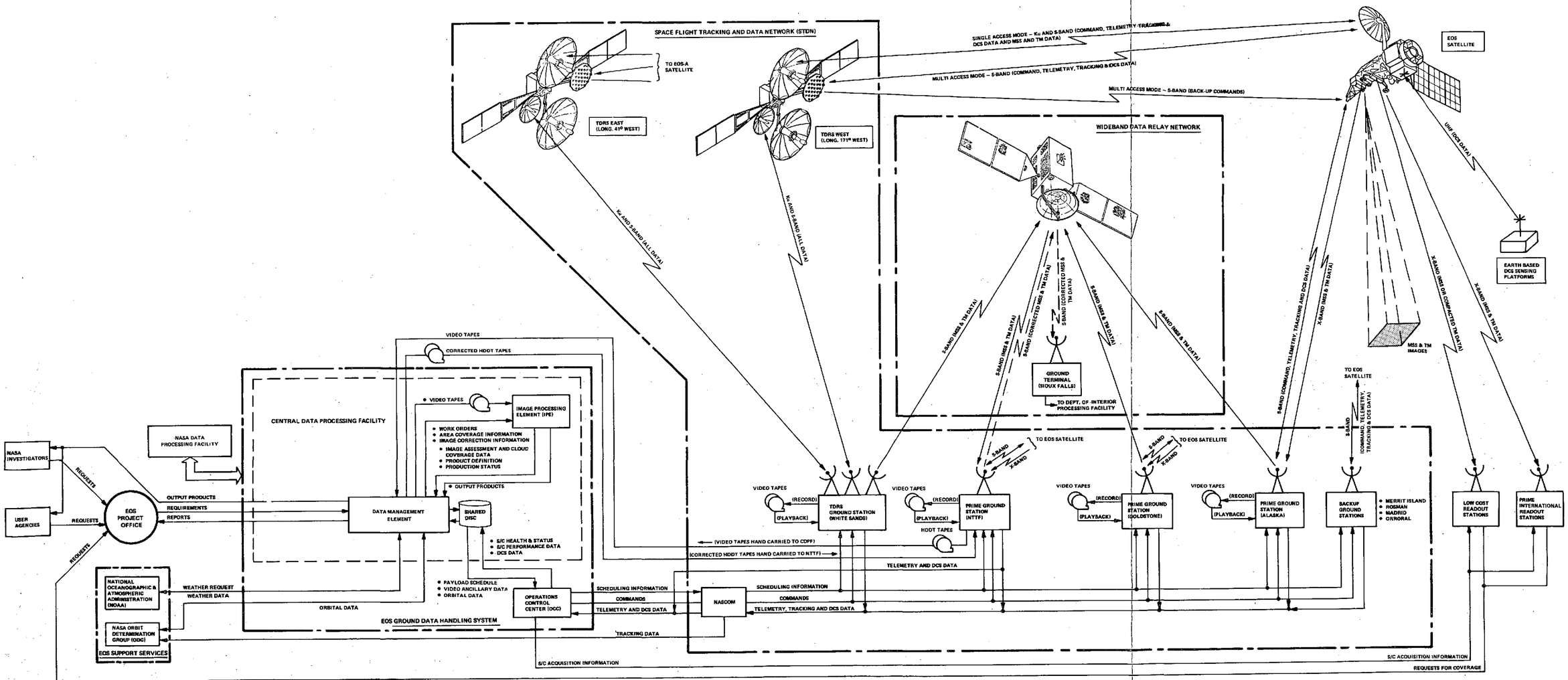

Figure 2-1. EOS System

FOLDOUT FRAME 1

ORIGINAL PAGE IS OF POOR QUALITY

FOLDOUT FRAME 2

FOLDOUT FRAME 3

the STDN stations or through the spacecraft 8 foot dish to TDRSS. Limited commanding, at reduced data rate, is possible from TDRS through the spacecraft omni antenna.

The Operations Control Center (OCC) is the focal point of all mission orbital operations. Here the overall system is scheduled, spacecraft commands are originated and orbital operations are monitored and evaluated. Telemetry and command data transfer between the OCC and remote ground sites is accomplished by NASA Communications (NASCOM).

The Central Data Processing Facility (CDPF) accepts payload data in the form of magnetic tapes recorded from direct transmission to the NTTF station or by DOMSAT relay. The CDPF then performs the required correction and annotation of the data and prepares master high density digital tapes of all data processed. Output products for users in the form of computer compatible tapes and color and black-and-white imagery may be prepared off-line using these master tapes. The CDPF includes a storage and retrieval system for all data and provides for the delivery of data products and services to investigators and other data users.

2.3.1 ORBIT AND COVERAGE

Systematic, repeating earth coverage under nearly constant observation conditions is provided for maximum utility of the multispectral data collected by EOS-A. The Observatory operates in a circular, sun synchronous, near-polar orbit at an altitude of 418 nautical miles. The local solar time at the north to south equatorial crossing is nominally 1100 hours. The observatory completes about 14 orbits per day and views the entire earth every 17 days. The orbit has been selected and will be maintained so that the satellite ground trace repeats its earth coverage at the same local time every 17-day period. This will require maintenance corrections approximate every two 17 day coverage cycles. A typical one-day ground coverage trace is shown in Figure 2-2 for the daylight portion of each orbital revolution.

This orbit selection is based on the EOS-B instrument complement which includes a High Resolution Pointable Imager (HRPI) with $\pm 32^{\circ}$ offset pointing for 3 day access sampled coverage. By using the same altitude for EOS-A, there is no required redesign of the TM between EOS-A and EOS-B flights.

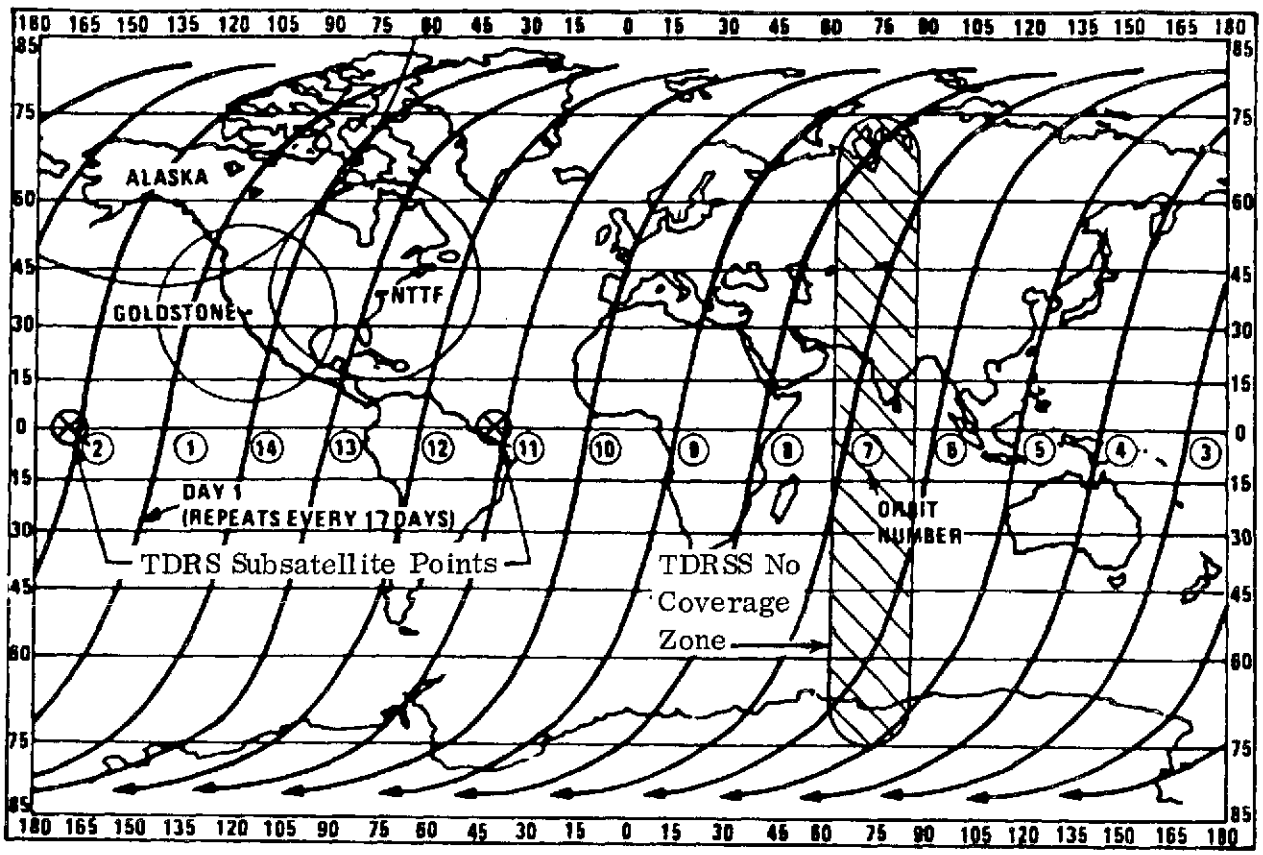

Figure 2-2. Typical EOS-A Daily Ground Trace
(Daylight Passes Only)

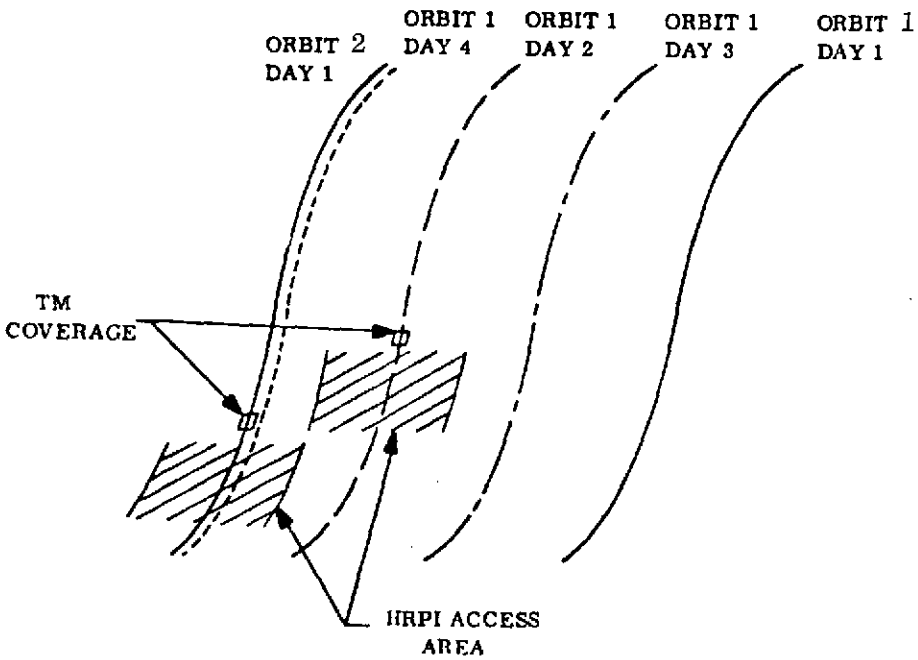

Figure 2-3. EOS-A Orbit 3-Day HRPI Access

The day-to-day orbit pattern is shown in Figure 2-3. The two outer orbits (Orbit 1 Day, Orbit 2 Day 1) represents the ground traces of adjacent orbits on a single day. On the second day a ground trace (Orbit 1 day 2) falls approximately one-third the way between the two. On the third day, a ground trace (Orbit 1 Day 3) falls two-thirds of the way between the first two. The HRPI off-nadir pointing capability is equal to one-third the distance between the two swaths on the first day; hence potential access anywhere on the earth is provided every three days without requiring more than a 32° offset view from nadir.

2.4 INSTRUMENT CHARACTERISTICS

The baseline instrument characteristics for EOS-A are given in Sections 2.4.1 and 2.4.2. Section 2.4.3 briefly describes the EOS-B HRPI and the SAR potentially applicable to follow-on missions.

2.4.1 MULTISPECTRAL SCANNER SUBSYSTEM (MSS)

The Multispectral Scanner Subsystem (MSS) Figure 2-4 gathers data by imaging the surface of the earth in several spectral bands simultaneously through the same optical system. The MSS for EOS A is a 5-band scanner operating in the solar-reflective and thermal IR regions of the spectrum from 0.5 to 1.1 and 10.4 to 12.6 micrometer wavelengths. It scans crosstrack swaths of 185.3 kilometers (100 nm) width imaging six scan lines in each of the first four spectral bands simultaneously, and two scan lines of the thermal band. The object plane is scanned by means of an oscillating flat mirror between the scene and the double-reflector Ritchey Chretien telescope optical chain. Table 2-4 indicates the 5-band MSS performance parameters for a 775 Km orbit.

2.4.2 THEMATIC MAPPER (TM)

The Thematic Mapper (Figure 2-5) gathers data by imaging the surface of the earth in several spectral bands simultaneously through the same optical system. The TM for EOS-A is a 6-band scanner operating in the visible and infrared portions of the electromagnetic energy spectrum. It scans cross-track swaths, imaging 16 scan lines across in each of the first 5 spectral bands and 4 scan lines of the thermal band simultaneously. The TM is an object plane scanner which uses an optical flat oscillating scan mirror to direct radiant energy through a Ritchey Chretien telescope and relay optics to a series

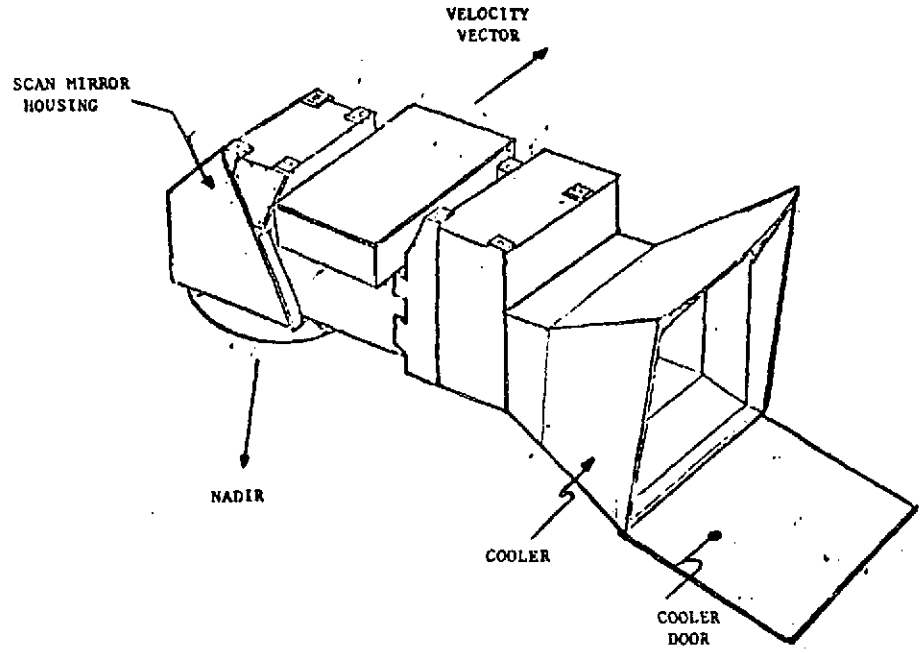

Envelope: 121 x 46 x 55 cm^3 (Cooler Closed)
Weight: 142 lbs. including Separate Electronics

Figure 2-4. 5-Band MSS

Table 2-4. 5-Band MSS Performance Matrix for 775 Km Orbit

Band	Spectral Range Microns	Ground Resolution Meters	Min Rad MW/cm^2-ster	Max Rad MW/cm^2-ster	Sin at Min Rad
1	.5-.6	79	.22	3.20	27
2	.6-.7	79	.16	2.92	17
3	.7-.8	79	.09	2.30	8
4	.8-1.1	79	.14	3.58	4
5	10.4-12.6	237	5.7(223°K)	36.0(330°K)	

15.06 Mbps	-	OUTPUT DATA RATE
0.46	-	SCAN EFFICIENCY
14.03 Scans/Sec.	-	MIRROR FREQUENCY
13.45°	-	FIELD OF VIEW
185 KM	-	SWATH WIDTH
13%	-	SIDEFLAP AT EQUATOR
1.4	-	SAMPLES PER PCITURE ELEMENT (CROSSTRACK)
6	-	BITS PER SAMPLE
142 lbs	-	WEIGHT OF SCANNER & MUX
65 Watts	-	AVERAGE POWER
73	-	COMMANDS REQUIRED

of detectors located in the focal plane. Spectral definition is obtained by spatially separating the available energy and then placing multilayer interference filters in the optical path to the detector arrays in the focal plane. The scanning arrangement is similar to the MSS. Data is taken on both half-cycles of the scan mirror oscillation by use of an image motion compensation dual mirror arrangement within the optical system that produces co-linear stripes of data as shown in Figure 2-6.

Table 2-5 indicates typical 6 band TM performance parameters for a 775 Km orbit. Both sun calibration and internal calibration of the TM is by command.

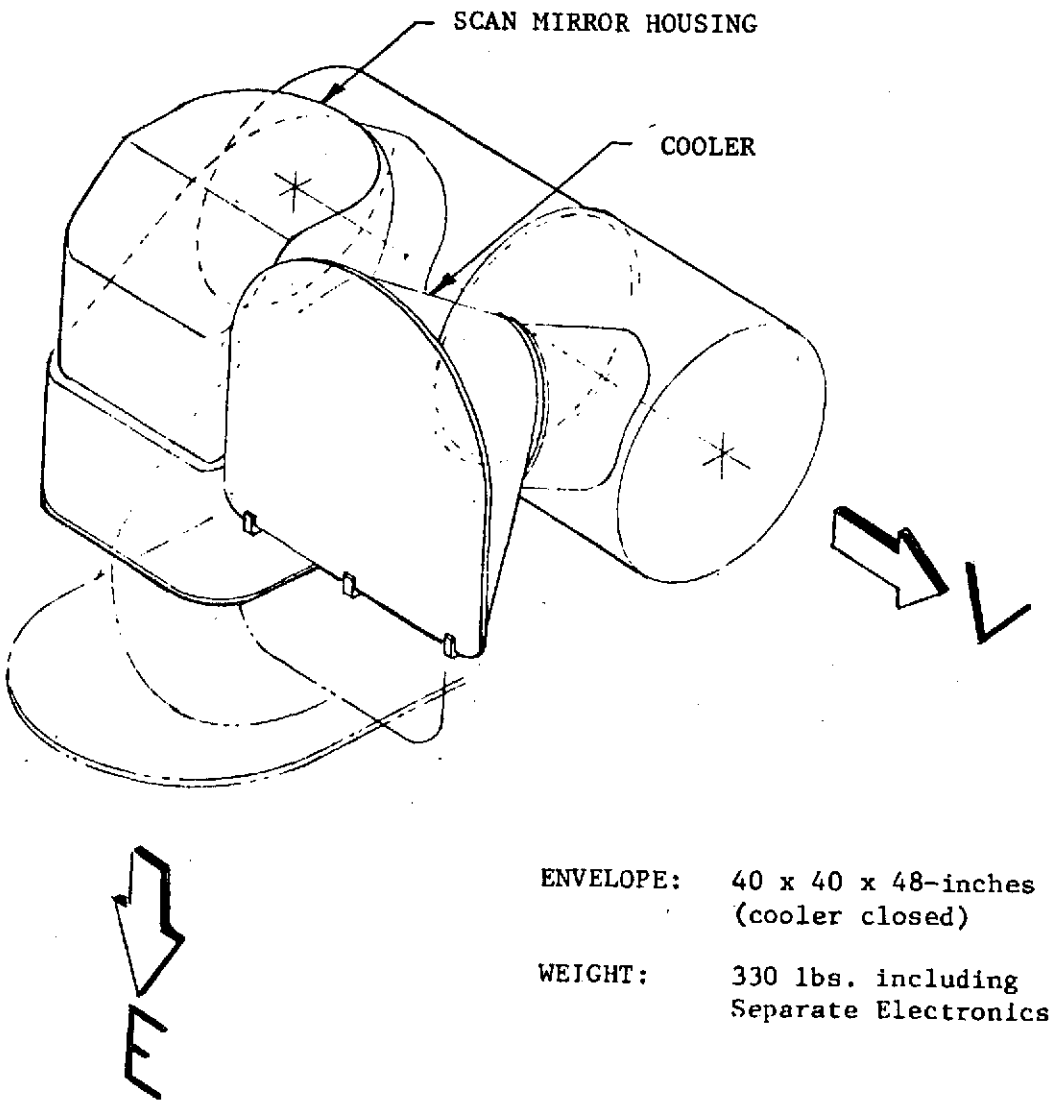

ENVELOPE: 40 x 40 x 48-inches (cooler closed)

WEIGHT: 330 lbs. including Separate Electronics

Figure 2-5. Thematic Mapper

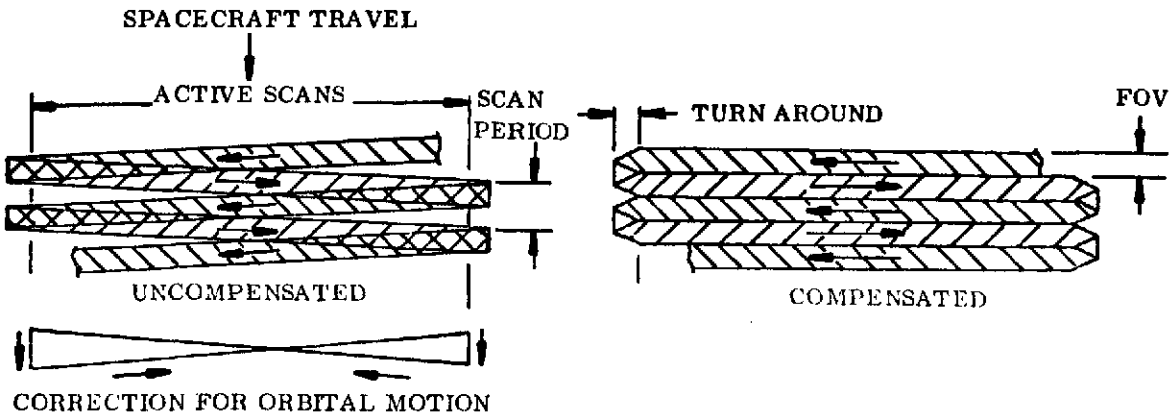

Figure 2-6. Uncompensated and Compensated Ground Patterns

Table 2-5. 6-Band TM Performance Matrix for 775 Km Orbit

Band	Spectral Range (Microns)	Nominal Ground Resolution (Meters)	Min. Radiance* (mw/cm^2ster)	Max. Radiance** (mw/cm^2ster)	S/N at Min Rad.***
1	.45-.52	30	.22	2.24	TBD
2	.52-.60	↓	.20	2.34	↓
3	.63-.69	↓	.09	1.38	↓
4	.8-.95	↓	.12	1.79	↓
5	1.55-1.75	↓	.12	1.00	↓
6	10.4-12.6	120	.77 (243°K)	2.62(320°K)	NEΔT=.5°K at 300°K

* based on bare soil at 47°N in December with ground visibility of 10Km

** scaled from ERTS-1 values

*** required additional user definition

63.7Mbps	- Output data rate
.80	- Scan efficiency
17.06 sweeps/sec	- Scan frequency
13.45°	- Field of view
185 Km	- Swath width
13%	- Sidelap at equator
1.0	- Samples per picture element (crosstrack)
7	- Bits per sample
330 lbs	- Weight of scanner & electronics
55 watts	- Power
~100	- Commands required

2.4.3 FUTURE EOS INSTRUMENTS

2.4.3.1 High Resolution Pointable Imager (HRPI)

The HRPI is a spectral imaging radiometer operating in four spectral bands within the 500 to 1100 nm wavelength region. Each of the four bands consist of self-scanned solid state silicon photodiode arrays comprised of 4800 elements. Either a staggered element array (Figure 2-7) or a linear array could be selected. The radiometer operates in the "pushbroom" mode with cross-track resolution determined by the element size and spacing and along track imaging provided by the spacecraft motion and time sampling of the elements. The center-to-center element spacing in the array is equivalent to 10 meters on the ground and the swath width covered is 48 km. at nadir. A pushbroom instrument offers solid-state reliability since there are no moving mechanical parts, high signal to noise due to the long dwell times available, and simplicity of design concept. The penalty paid for these benefits are greatly increased calibration complexity, the state-of-the-art development in producing long linear arrays, and a high expectation of detector dropouts at detector chip interfaces.

For the EOS missions, the HRPI will be used as a high access sampler to provide the possibility of imaging a specified ground area every 3 days. To accomplish this, the 3.5° FOV can be pointed (cross-track) in 1° steps through a total of $\pm 32^{\circ}$ to provide 3 day access from a 775 Km orbit.

Typical HRPI operating time is about 15 minutes per orbit with about 75% being useful imaging time and 25% slew time. Data would be sent nominally during slew, but not processed at the receiving station. An auxiliary signal inserted into the composite video would indicate beginning and end of slew. The slew rate is approximately 1°/sec. to meet operational time-lines without excessive uncompensated momentum into the spacecraft.

Typical performance parameters are shown in Table 2-6. The HRPI will utilize prismatic spectral separation so that the 4 spectral bands will be spatially registered. In-flight calibration will consist of both a sun and internal lamp calibration. DC restoration of each detector for each sample and precise thermal control should minimize radiometric errors between calibration updates.

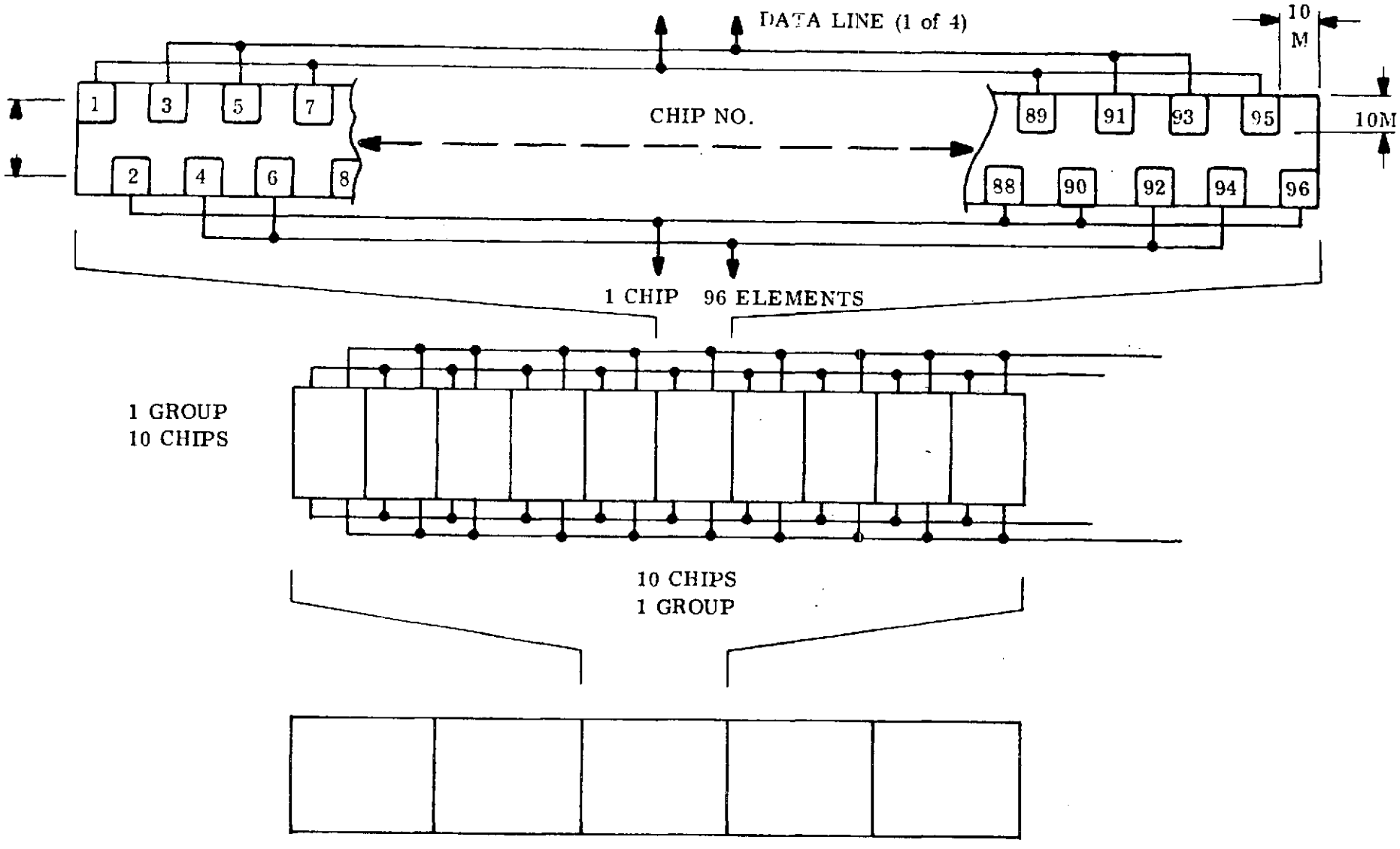

Figure 2-7. Typical Array Configuration

Table 2-6. HRPI Performance Matrix for a 775 Km Orbit

Band	Spectral Range (Microns)	Nominal Ground Resolution* (meters)	Min Radiance* (mw/cm^2ster)	Max Radiance* (mw/cm^2ster)	S/N at Min Rad
1	.45-.52	10	.22	TBD	TBD
2	.52-.60		.20		
3	.63-.69		.09		
4	.8-.95		.12		

* At NADIR ± 50 N miles (off-axis performance is function of pointing angle)

99.4 Mbps	- Output Data Rate
.90	- Scan efficiency
3.54°	- Field of view
4800 Km	- Swath width
±32°	- Offset pointing required for 30 day access
1.0	- Samples per picture element
7	- Bits per sample
350 Lbs	- Weight
110 watts	- Average power
40 commands required	

2.4.3.2 Synthetic Aperture Radar (SAR)

The all weather capability and controlled illumination for photometric purposes afforded by a synthetic aperture radar makes such an instrument an attractive experiment on a future mission. There are still basic questions to be resolved such as optimum frequencies and polarizations, spatial resolution requirements, and data handling methods.

A dual channel (X and L band) radar provides complementary data which is useful for multispectral analysis applications. The major problems of accommodating a dual band radar are indicated in Table 2-7.

User requirements suggest that coverage at 0100, 0500 and 1300± 1 hours are optimum descending node times for thermal inertia geologic investigations. Table 2-8 indicates the most salient performance parameters of a point design dual channel radar.

Table 2-7. Synthetic Aperture Radar Interface Problems

Problem Area	Nature of Problem and Effect on Performance	Possible Solutions
1. Data Processing	• Earth rotation distorts doppler pattern of antenna system, giving an apparent displacement of the target. Terrain slopes also produce the same effect at the large depression angles proposed • Smear due to earth rotation.	• Ground processing with a knowledge of satellite location, relative velocity and the general nature of the terrain covered, can eliminate the undesirable effects in a digital processing operation • Calculate earth rotation rates on-board to slip range gate.
2. Mechanical Integration	• Large antenna size. • Restriction on antenna/feed motion to about 0.2 mm per 0.1 second (integration time) to minimize loss of coherency effects.	• Deployable antenna. • Determine vehicle vibration and shock potential to SAR, add dampers and shock mounts as required.
3. Electrical Integration	• Highly sensitive receiver circuitry susceptible to noise and electrical interferences.	• Design for minimum interference.
4. Electrical Breakdown	• Vacuum causes different electrical breakdown conditions for both R.F. and D.C. circuits. Especially susceptible are the TWT output channel through the feed, and the high voltages required for the TWT.	• Vacuum effect eliminated by pressurizing, but this is susceptible to leaking and subsequent negating of entire radar operation. Potting and open construction may be preferred alternates.
5. Cooling	• Cooling is required for the TWT which generate 150 to 175 watts	• Heat pipes to radiator or heat storage system.

Table 2-8. Synthetic Aperture Radar Performance Parameters

Band	Frequency	Phase	Polarization
X (TWT)	9.3-9.5GHz	I&Q	H&V
L (array)	1.7 GHz	I&Q	H

30m	- nominal ground resolutions
62.4 Mbps	- Output data rate per band
50 Km	- Swath width
4 + sign	- Bits per sample
75°	- Depression angle
300:1	- Pulse compression
25%	- Oversampling
3 to 10	- S/N after integration
27' x 2.5' x 1'	- antenna envelope (deployed)
5' x 2.5' x 1'	- electronics envelope
174 Lbs	- antenna weight
213 Lbs	- electronics weight
1250 watts	- average on power (10% duty cycle)
175 watts	- transmitted power
10 watts	- standby power (90% duty cycle)

2.4.3.3 Passive Multichannel Microwave Radiometer (PMMR)

The PMMR measures self-emitted thermal energy and reflected solar energy at several discreet frequencies in the microwave portion of the spectrum. This provides all-weather capability and day-night operation, but at the costs of complex data processing, low resolution and mechanical complexity. Table 2-9 indicates the major problems of the PMMR development.

Table 2-9. Passive Multichannel Microwave Radiometer Interface Problems

Problem Area	Nature of Problem and Effect on Performance	Possible Solutions
1. Antenna Performance	• Five single reflector antenna systems considered - None meet beam efficiency and sidelobe requirements Offset reflector - array feed Offset reflector - multiple horn feed Telescope - multiple horn feed Parabolic focus Mechanically scanned antenna	• Use a two reflector system thus allowing optimization of feed design
2. Mechanical Integration	• All antenna systems physically large and some designs (multiple horns and telescope) result in complicated feeds requiring close tolerances and large momentums.	• Use a two reflector system which is deployed. • Restrict PMMR to Titan launch thus obtaining improved performance.
3. Data Processing	• Time sharing receiver electronics requires data processing to unscramble polarization information.	• Use of receiver for each polarization resulting in simpler processing but increased flight electronics.
4. Data Interface	• Dynamic Range (320°K), resolution (0.3°K at 4.99 GHz) and signal to noise ratio require special data system interface.	• Use multi-work format and data compression. • Utilize gain switching in instrument.

SECTION 3.0

SPACECRAFT DESCRIPTION

The description of the baseline spacecraft design is organized into three parts. Section 3.1 describes the basic or general purpose portions of the spacecraft which apply to a variety of mission applications. Section 3.2 describes the configuration of the EOS-A spacecraft using this basic spacecraft and then describes the mission unique equipment required to support the mission. Section 3.3 shows configurational adaptations using the basic spacecraft for a variety of missions and payload alternatives. Mission peculiar equipment is not detailed for these configurations.

3.1 BASIC SPACECRAFT

The description to follow is organized into the following sections:

Section	Topic
3.1.1	Structure and Mechanical
3.1.2	Thermal Control
3.1.3	Propulsion Reaction Control Subsystem
3.1.4	ACS Module
3.1.5	Power Module
3.1.6	C&DH Module
3.1.7	Basic Software
3.1.8	Electrical Integration

Each section discusses its major requirements, describes the baseline design approach, discusses performance capabilities and addresses commonality in terms of its ability to accommodate a variety of missions. The equipments considered part of the basic or general purpose spacecraft are shown in Figure 3.1-1. Accommodations unique to the EOS-A mission are discussed in Section 3.2.

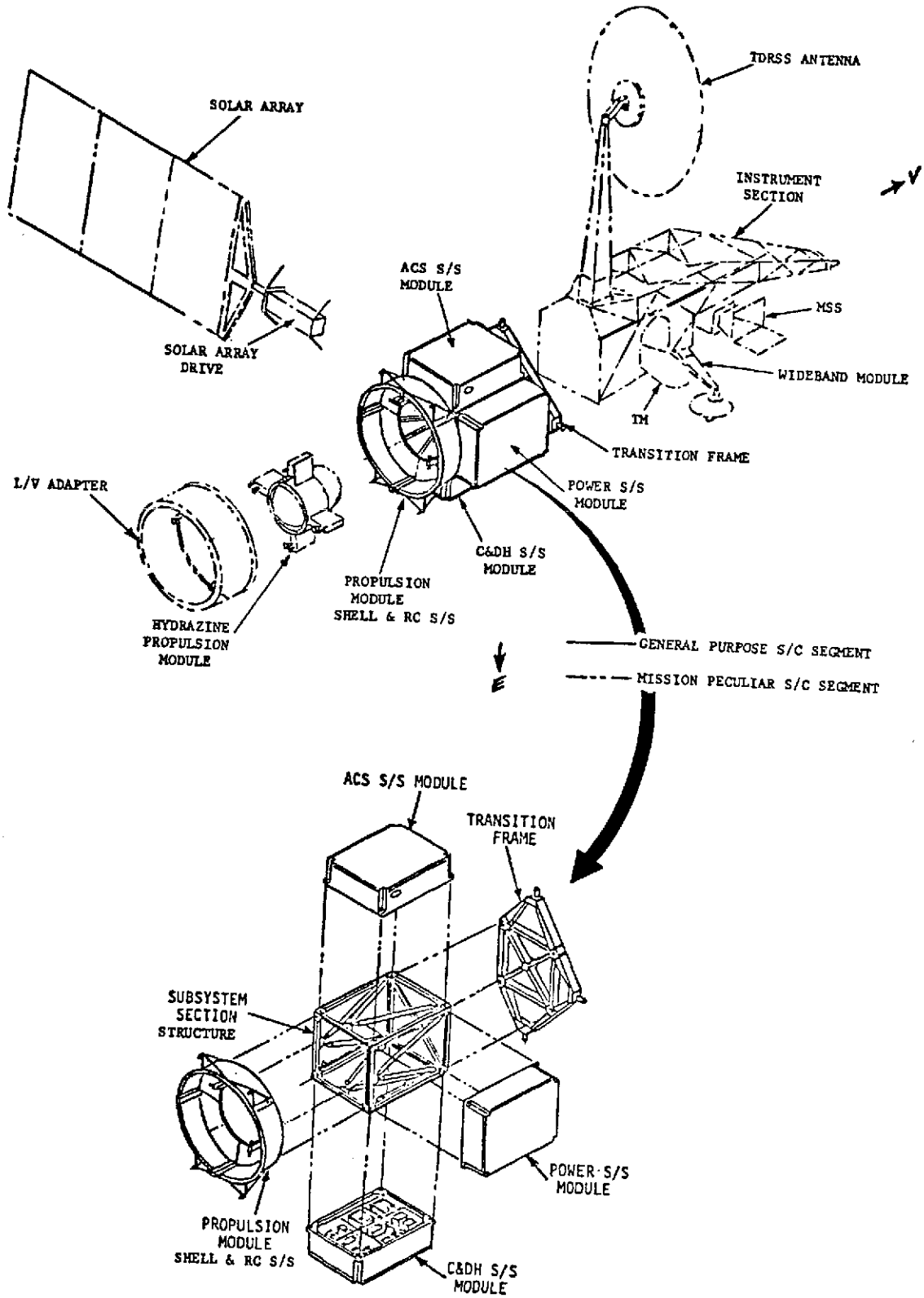

Figure 3.1-1. General Purpose Spacecraft Segment

3.1.1 STRUCTURE/MECHANICAL

The EOS spacecraft structural design, critical loads and environments are discussed in this section. In addition, this section covers the overall structural arrangement and design criteria which are also applicable to the Mission Peculiar Segment. The design approach for separation, actuation and latching mechanisms, the solar array and instrument structure is discussed in section 3.2.2.

The key factor in the structure and mechanism design is low cost, reflected basically in the selection of standard readily available materials and state of the art construction techniques for the structure, and use of developed and proven mechanisms. In addition, higher design factors of safety will be specified to minimize structural testing particularly on the fully assembled spacecraft, and to reduce the need for complex structural analyses to verify the structural integrity.

A completely modular spacecraft assembly has been adopted to permit parallel development of subsystems. The spacecraft structural arrangement has been designed for either Delta, Titan or Shuttle launch with particular emphasis on ultimately providing shuttle retrieval and refurbishing of subsystems and instruments.

3.1.1.1 Structural Arrangement and Requirements

The EOS structural arrangement shown on Figure 3.1-2, uses a conventional conical adapter rigidly attached to the booster interface and attached to the spacecraft by a circumferential vee-band separation joint. The subsystem support structure is an aluminum truss attached to the forward face of the built-up cylindrical propulsion module at eight points. The propulsion section redistributes loads from these eight hard points to the vee-band joint. A Transition Frame attached at the forward corners of the box truss and separating the subsystem and Instrument Sections, provides a three point retention interface for Shuttle launch or retrieval.

Subsystem modules are mounted to the upper, lower, and anti-sun sides of the box truss and the solar array drive is attached internally in the forward area aft of the Transition Frame. This Subsystem Section composed of box truss, subsystem and propulsion

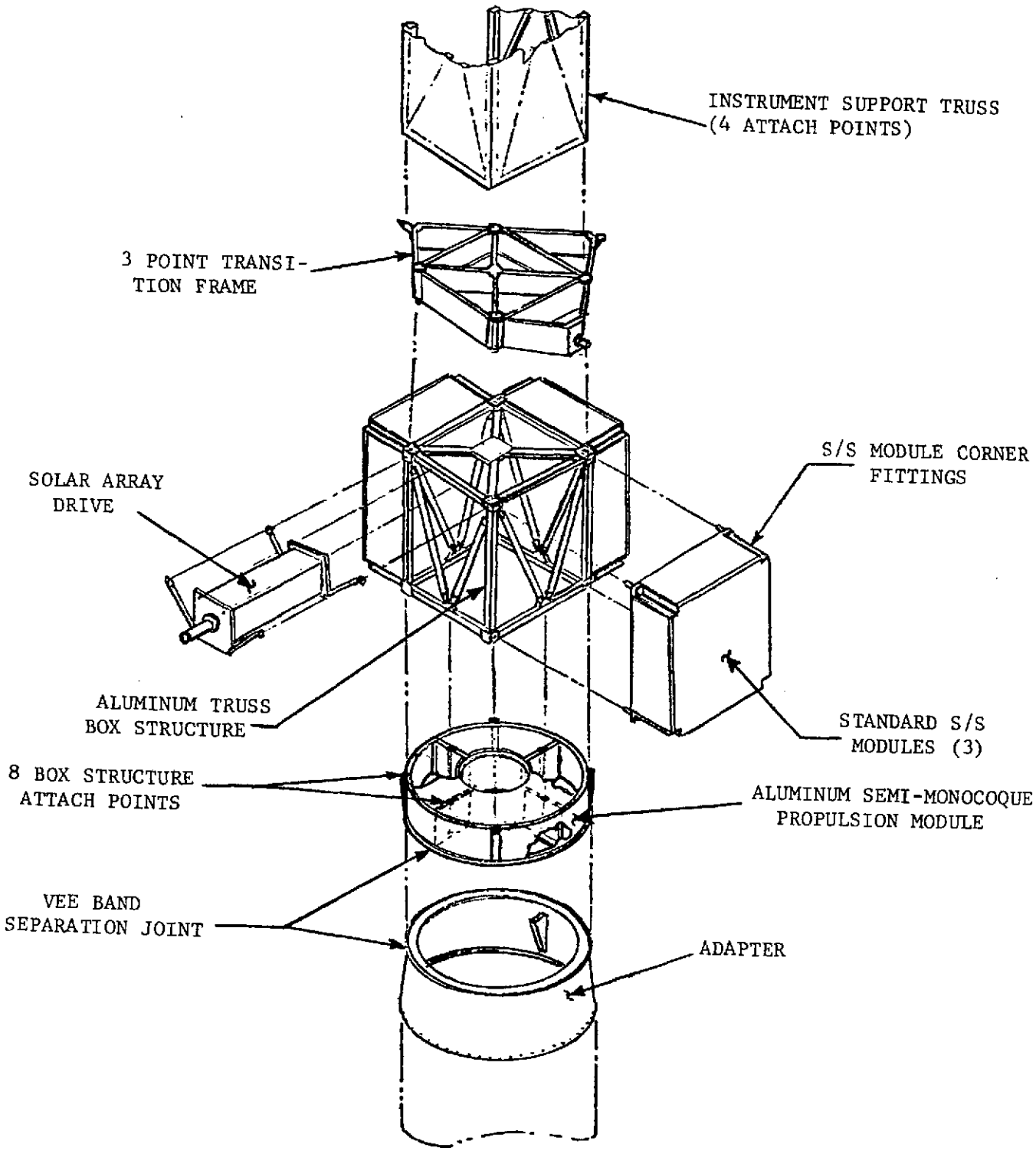

Figure 3.1-2. EOS Structural Arrangement

module shell forms the basic Bus common to all EOS configurations.

The forward Mission Peculiar instrument support structure is attached to four corner fittings on the Transition Frame, and all loads are carried through the subsystem box truss and propulsion module shell structure to the adapter and booster interface for a Delta or Titan launch. For a Shuttle launch or retrieval, the spacecraft is retained at the central transition frame.

This conventional arrangement has been selected for EOS for its significantly lower weight, providing maximum payload weight capability and margin, and for its simplified vee-band separation system.

The EOS primary and secondary structure will be designed to the following loads criteria:

Limit Loads: Actual applied loads as specified for launch, orbital and ground conditions.

Qualification Loads: 1.5 x Limit Loads

Design Loads: 2.0 x Qualification Loads (or 3.0 x Limit Loads)

These criteria result in a structural design having significantly higher strength than normally exhibited by weight limited aircraft and spacecraft structures and will pay for this added capability with additional structural weight. The additional weight will be predominately concentrated in the spacecraft primary structural members and will not as significantly affect the more lightly loaded secondary structure.

Use of the high design factors will give an inherently strong structure and will greatly reduce the need for an extensive and costly structural test program. Proof loading of flight structures to Qualification levels (1.5 x limit) would be completely acceptable and ultimate load tests would be limited to those critical elements and mechanisms where knowing the ultimate margin is mandatory for spacecraft survival, to justify life performance, or to verify the design by tests rather than a more expensive analysis. The structural analysis program can be reduced significantly since many elements will need little or simplified detailed analysis to verify adequate margins.

The EOS structure for all spacecraft configurations will be designed to be compatible with the Delta, Titan and Shuttle launch vehicles environments summarized in Table 3.1-1.

Table 3.1-1. Structural Design Criteria

LAUNCH SYSTEM	SPACECRAFT QUALIFICATION TEST LEVELS (1.5 X EXPECTED LEVEL)							S/C LOAD FACTOR	S/C ULTIMATE DESIGN LOADS(G'S)	
	ACCELERATION(G'S)		RANDOM VIB. (G RMS)	MAX. SINE VIB. (G'S)		ACOUSTICS db	SHOCK RESP. (G'S MAX)			
	THRUST	LATERAL		THRUST	LATERAL				THRUST	LATERAL
Delta	-18.0	±3.0	14.1	6.0	2.0	144	1700	2.0	-36.0	6.0
Titan III B	-13.5	±2.5	16.9	3.0	2.0	145	3900	2.0	-27.0	5.0
Shuttle L/O	-3.45	1.28	7.9 to	TBD	TBD	143 to	TBD	2.0	-6.9	2.56
B/O	-4.95	.81	24.3			149		(1.2	-9.9	1.61
Entry	± .38	4.56						crash)	± .76	9.12
Ldg	±2.25	3.8							±4.5	7.6
Crash	±9.0	4.5							+10.8	5.4

Shuttle induced loads on the spacecraft are reacted by the Flight Support System (FSS) cradle at the transition frame between the spacecraft subsystem and instrument sections, while spacecraft body loads from the instrument section are carried through the subsystem section structure to the conventional adapter on Delta or Titan. This central body support reduces loads in the subsystem section for Shuttle retention and the Delta and Titan acceleration levels will produce higher loadings in this subsystem section. The Instrument Section lateral acceleration loads are slightly higher for the Shuttle landing conditions; however, combined axial and lateral conditions for the conventional booster will produce higher overall loads in this section. The most potentially severe structural loadings from Shuttle appear to be the random vibration and acoustic noise levels which may produce the highest dynamic response in the Instrument Section and govern instrument mounting and equipment design.

Detailed design requirements for the structure and mechanisms are included in the Structure/Mechanism Specification covering both General Purpose and Mission Peculiar Spacecraft Segments.

3.1.1.2 Subsystem Section and Propulsion Support Structures

The Subsystem Section structure shown on Figure 3.1-3 is a tubular truss box structure and the semi-monocoque propulsion module shell. The box truss has eight machined aluminum corner fittings with attachment provisions for the square aluminum tube edge and closing members and for the subsystem module mounting studs. Diagonals are round

aluminum tubes with clevis end fittings for attachment to the forward corner fittings and the aft strut support fittings.

The propulsion module structure consists of an outer cylindrical shell terminating in the forward half of the Vee-band joint, and an inner mission peculiar cylindrical tank support assembly which is added as required. Intermediate keels between the cylinders and a stiffened sheet forward cover complete the module structure.

Four external fittings on the outer cylinder interface with the four corner box longerons and four inboard fittings mate with the box diagonal terminal fittings. Axial loads are beamed to the outer shell through the intermediate keels and shear loads are redistributed to the outer shell through the forward cover skin. This eight point box-shell interface permits efficient transfer of concentrated loads from the box truss to the circumferential separation band attachment to the adapter.

Construction is primarily of 2024 aluminum alloy sheet, tubing, and formed sections, with riveted and bolted connections.

The Propulsion Module is designed as a separate sub-assembly to be shipped to the propulsion vendor for installation and check out of all propulsion equipment and plumbing prior to assembly to the spacecraft.

The design approach for the subsystem support structure is to use the same basic structural design for use with Delta, Titan or Shuttle launch vehicles, but to initially size the structural members for loads comparable to spacecraft weights within the Delta launch capability. This approach assumes an aft adapter for both Delta and Titan launches. Shuttle launch is not critical since loads from the Instrument Section and Subsystem Section are reacted at the central Transition Frame. The effect of multiple booster usage on the design is shown on Figure 3.1-4, a plot a subsystem support structure weight versus spacecraft gross launch weight. The core structure designed to the full Delta 2910 weight capability weighs about 130 pounds and for the Titan IIIB maximum capability

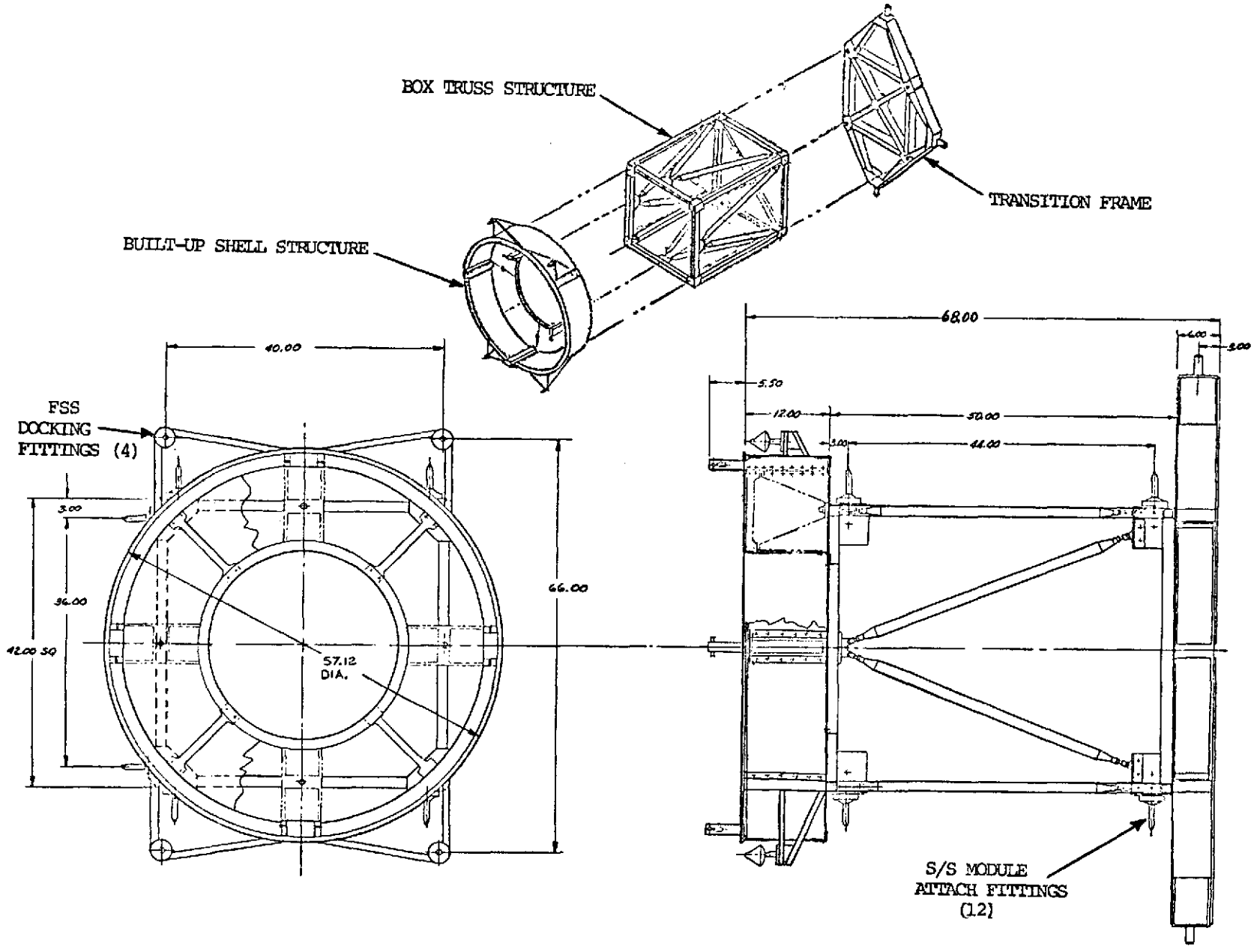

Figure 3.1-3. EOS Subsystem Section Structure

is 205 pounds. This weight differential can be spent on the initial structure at a penalty to the Delta payload capability, or the structure can be designed to incorporate simple modifications during fabrication to provide the higher strength. This latter approach is preferred since payload weight for the early Delta missions is most critical and the changes to the structure, predominately tube thickness increases, is not overly costly if considered during the initial design stages. The alternative of designing a different adapter to mate at the transition section for Titan launches was examined and eliminated as significantly less cost effective.

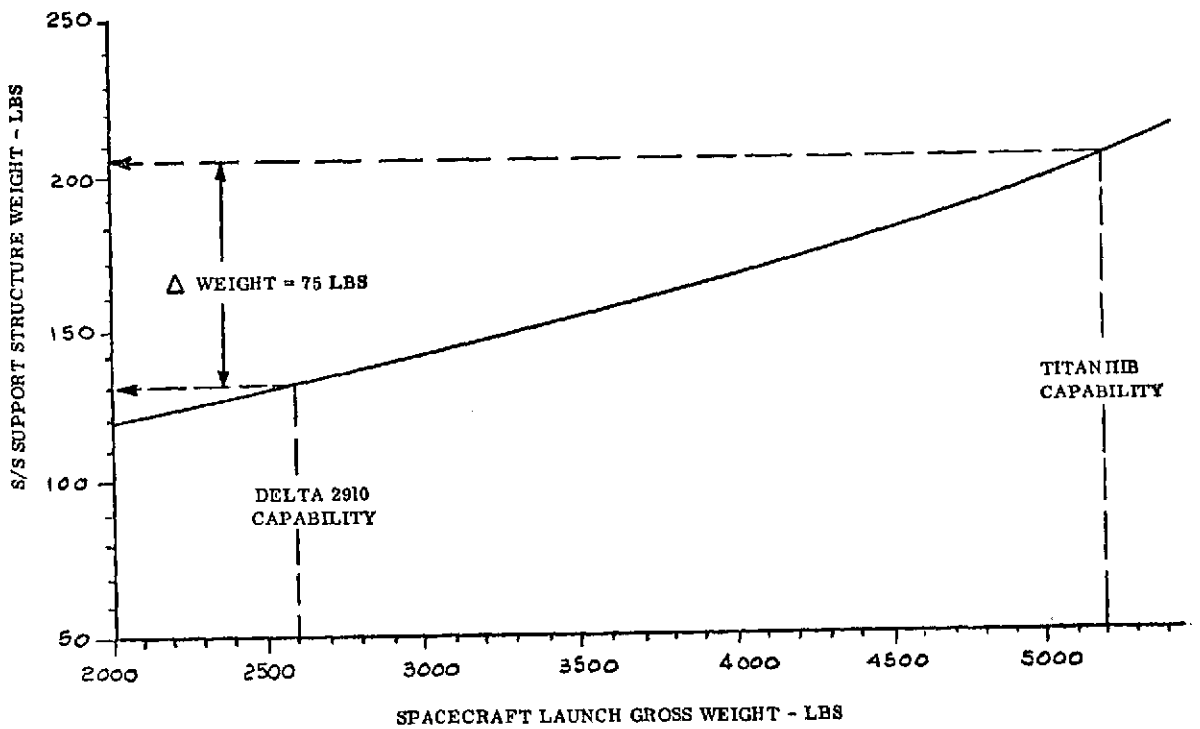

Figure 3.1-4. Subsystem Support Structure Weight vs. S/C LGW

3.1.1.3 Subsystem Module Structure and Assembly

Arrangement and construction of the ACS, Power and C&DH modules is illustrated on Figure 3.1-5 for a typical subsystem module. These modules are designed to reject all waste heat outboard with all side and inboard surfaces covered with multi-layer insulation blankets. Components are mounted directly to the inner face of the one inch thick aluminum honeycomb sandwich outer panel. The outer panel is integrally stiffened

by keels tailored to the individual component arrangements. A subsystem harness interconnecting the components and interface test connectors is designed for fabrication and installation as a unit. Once the harness is installed and clamped to the keel the module may be bench tested prior to installation of the frame structure and insulation covers. This "breadboard" subsystem assembly on the outer panel provides maximum ease of installation and replacement of components during the assembly cycle.

When panel and harness assembly and test are completed, the panel is bolted to the open box frame structure and the interface and test connectors attached to the frame brackets. Installation of the insulation blankets completes module assembly.

The module frame and panel structure is shown on Figure 3.1-6. Aluminum sandwich was selected for the outer panel to provide a inherently rigid mounting base for components and, based on GSFC dynamic testing, provides high structural damping during vibration. Honeycomb sandwich also permits the use of fewer edge attachments by using the full panel depth and suitable structural inserts at the panel edges. The panels are of hexagonal cell core bonded to 2024 aluminum faces construction.

The outer frame is fabricated from 2024 aluminum sheet, extrusions and formed members. The stiffened sheet construction was selected since side openings for connector panels and sensors could be most readily accommodated with this type construction.

Modules are attached to the subsystem support structure at the four corners and all module loads are reacted at the inboard corner socket fittings. Simple bath-tub type fittings are used for the non-resupply case and are replaced with corner latch mechanisms for Shuttle resupply.

The assembled modules are 16 inches in height, 48 inches long and 40 inches wide, and provide adequate volume for subsystem growth to satisfy all alternate EOS missions and payloads.

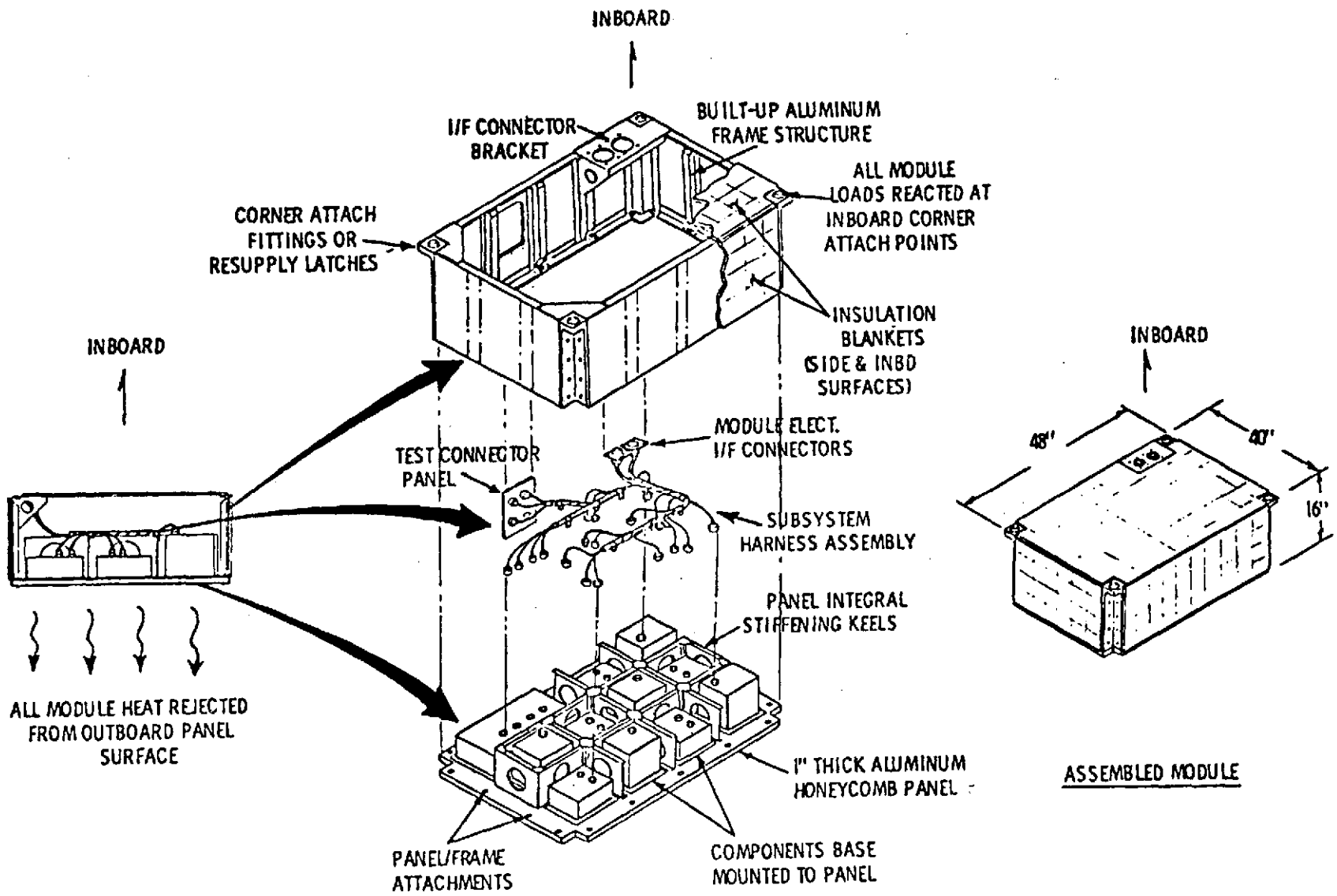

Figure 3.1-5. Subsystem Module Arrangement

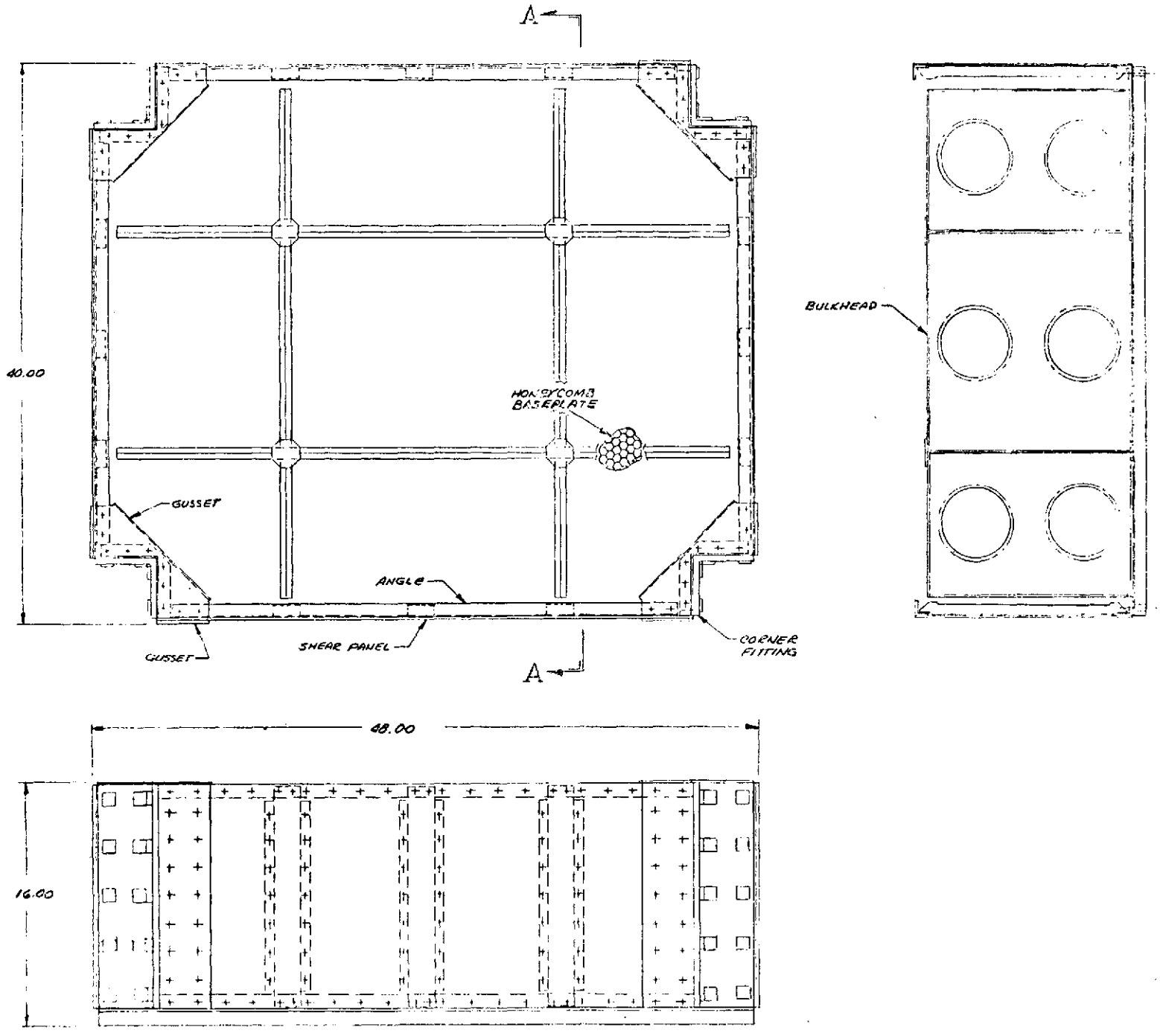

Figure 3.1-6. Subsystem Module Structure (Sheet Aluminum)

3.1.1.4 Transition Frame

The spacecraft three-point Transition Frame located between the Subsystem and instrument sections provides support to the forward and aft spacecraft sections during Shuttle retention and reacts loads into the Shuttle support cradle as shown on Figure 3.1-7. For a Delta or Titan launch the Transition Frame is not used as a load path and body loads are carried through the subsystem section to a conventional aft adapter. The Frame reaction system is identical to the three-point system used for FSS to Shuttle attachment and this design results in significantly lighter cradle and Transition structure designs. The spacecraft sections each attach to the frame at four corner fittings and special attachments are provided for SAMS handling during deployment and retrieval and for attachment of mechanical aerospace ground equipment (MAGE) fixtures for ground handling and mating of the spacecraft. Frame construction is of formed and machined 2024 aluminum members bolted and riveted to form the assembly. Transition Frame geometry and dimensions have been dictated by the 86.0 inch diameter Delta shroud dynamic envelope and the subsystem section general arrangement.

3.1.2 THERMAL CONTROL

The thermal control subsystem maintains all vehicle temperatures and temperature gradients within specified limits for all mission phases, including launch, orbit and ultimately during periods when docked to the Space Shuttle for maintenance, repair or replacement of vehicle modules, or in the shuttle bay during retrieval. Thermal requirements are achieved using a simple, reliable, flight proven thermal control concept with thermal insulation and coatings supplemented by electronic thermostat and command activated electrical heaters.

3.1.2.1 Requirements

The mission parameters and requirements affecting thermal control are presented in Table 3.1-2. The subsystem module temperature ranges result from the design tradeoff results presented in Report #3.

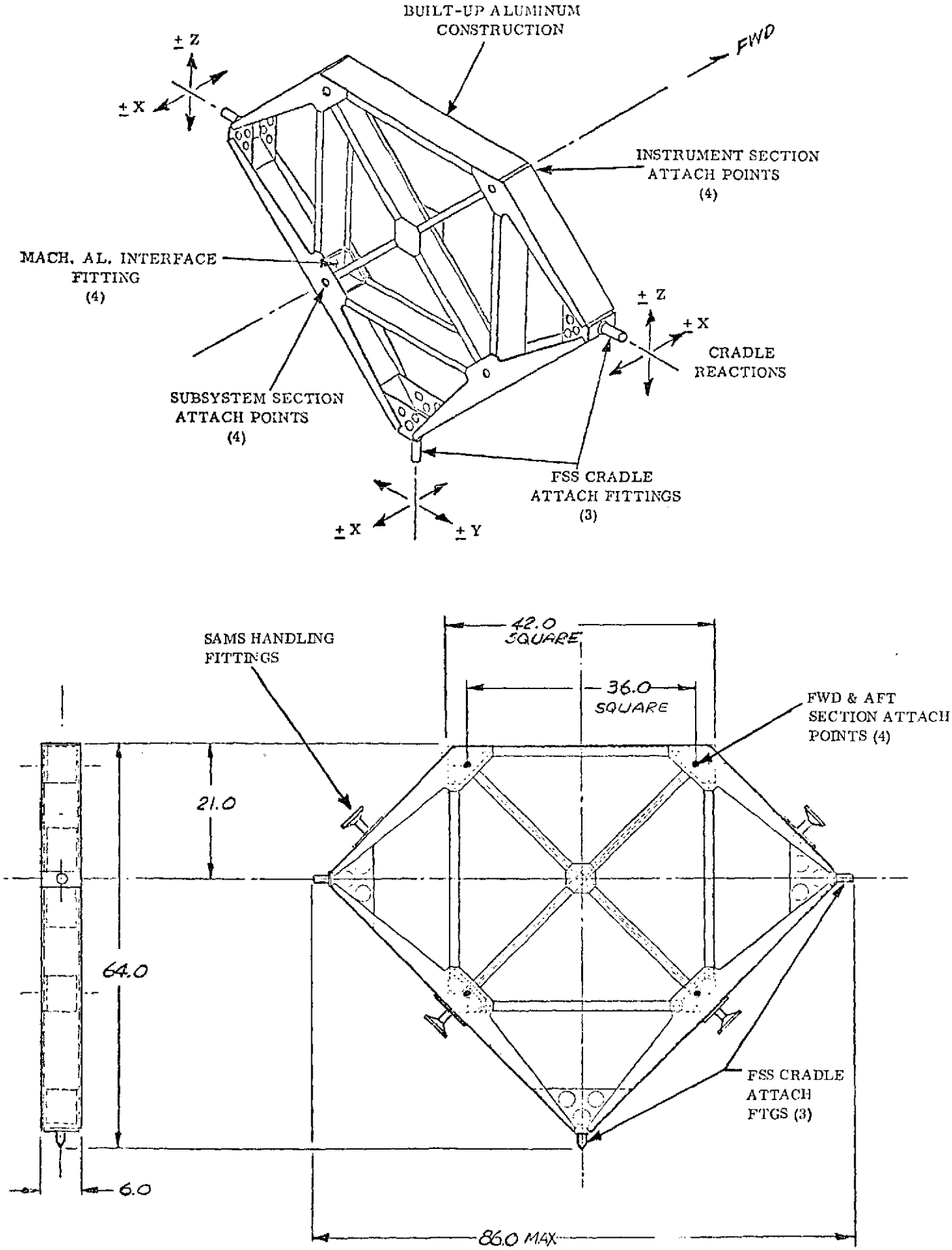

Figure 3.1-7. EOS Transition Frame

Table 3.1-2. Thermal Control Requirements

PARAMETER	REQUIREMENT
Launch Vehicle	Delta, Titan, or Space Shuttle Capability
Orbit	
Altitude	300 to 900 n.m.
Attitude	3 axis control
Inclination	Sun Synchronous
Beta Angle	0 to 45 degrees
Orientation	Earth (Vertically Stabilized)
Life Time	2 Years
Radiation Parameter	
Solar Constant	429.0 ± 4.3 BTU/hr ft^2 with +3.43%, - 3.26% seasonal variation
Albedo	+0.30, -0.15
Earth IR	$75.1 {}^{+8.9}_{-30.8}$ BTU/hr ft^2
Temperature	
ACS Module	$70 \pm 5^{\circ}$F
C&DH Module	$70 \pm 5^{\circ}$F
Power Module	$50 \pm 5^{\circ}$F
RCS Module	40 to 120°F
Rocket Engine Catalyst Bed (prior to firing)	250°F Min.

Table 3.1-3. Component Power Dissipation Requirements

MODULE/COMPONENT	ORBIT AVERAGE DISSIPATION - WATTS		
	Maximum	Nominal	Minimum
ACS Module	105.6	96.0	86.4
C&DH Module	153.7	139.7	125.7
Power Module	113.5	103.2	92.9

The subsystem module dissipation requirements are presented in Table 3.1-3. Additional thermal control subsystem requirements are presented in detail in the Thermal Control Subsystem Specification, Volume 3 of Report #5.

3.1.2.2 Baseline Description

3.1.2.2.1 Functional

The thermal control subsystem passive elements include multi-layer insulation blankets, thermal coatings, conduction spacers and thermal grease. Active elements include command or electronic thermostat activated electrical heaters. The design approach for the subsystem modules utilizes the thermal coating optical properties to control the amount of energy which is absorbed from external vehicle fluxes and rejected from external vehicle radiation surfaces. The radiation area is sized to reject the absorbed external heat fluxes and maximum orbit average internal heat dissipations while maintaining the maximum average temperature specified. The 5 mil teflon over silver thermal control coating has a beginning of life solar absorptivity of 0.08, a 2 year degraded value of 0.18, and a hemispherical emissivity of 0.83. Using this thermal control coating, the maximum average temperature and maximum average orbit heat fluxes for a 400 nm, 7.5° Beta nominal orbit, the internal heat dissipations from Table 3.1-3, and the vehicle module locations shown on Figure 3.1-8, the required heat rejection areas for the system modules are 3.6 ft^2, 8.6 ft^2, and 4.6 ft^2 for the ACS, C&DH, and Power Modules respectively. With this area defined and the minimum average temperature and orbit heat fluxes, the minimum average internal power dissipation required is 101.0 watts, 135.7 watts, and 104.0 watts for the ACS, C&DH, and Power Modules respectively. Since the minimum average module power dissipations specified in Table 3.1-3 are below these values, 13.6 watts, 10.0 watts, and 11.1 watts of electronic thermostat activated compensation heater power (34.7 watts total) is required for the ACS, C&DH and Power Modules respectively. This power dissipation requirement does not affect array area since the required dissipation is below the maximum average power dissipation for each module (which the array already provides). These areas and heaters powers are typical of those required for the range of nominal orbits defined in Table 3.1-2. For periods of time when these modules are being replaced or serviced by the Shuttle, electrical heaters located on the structure adjacent to the modules will be powered using

Shuttle power to simulate the module presence and prevent alignment errors caused by structural temperature gradients resulting from heat leaks at the missing module locations.

The thermal control subsystem functional schematic which illustrates the interface between subsystem components as described above is presented on Figure 3.1-9.

The RCS module thermal sink is defined by the orbit average vehicle circumferential average temperature and the orbit average vehicle end sink (i.e., perpendicular to vehicle velocity vector). These sink temperatures as a function of α/ϵ ratio are presented on Figure 3.1-10. The minimum temperature for the hydrazine tank, lines latching valve assembly and engine valves, is 40°F. From Figure 3.1-10, the average circumferential sink temperature can be maintained above 40°F with an α/ϵ greater than 1.4 and the average end sink can be maintained above 40° with an x/ϵ greater than 0.9. Therefore, the RCS module thermal concept is passive with thermal insulation and coatings. Local electronic thermostat activated heaters will be required at the eight Low Thrust Engine (LTE) valves since the engines will locally protrude the insulation. Each LTE valve will require 0.5 watts orbit average, a total heater requirement of 4.0 watts. In addition,

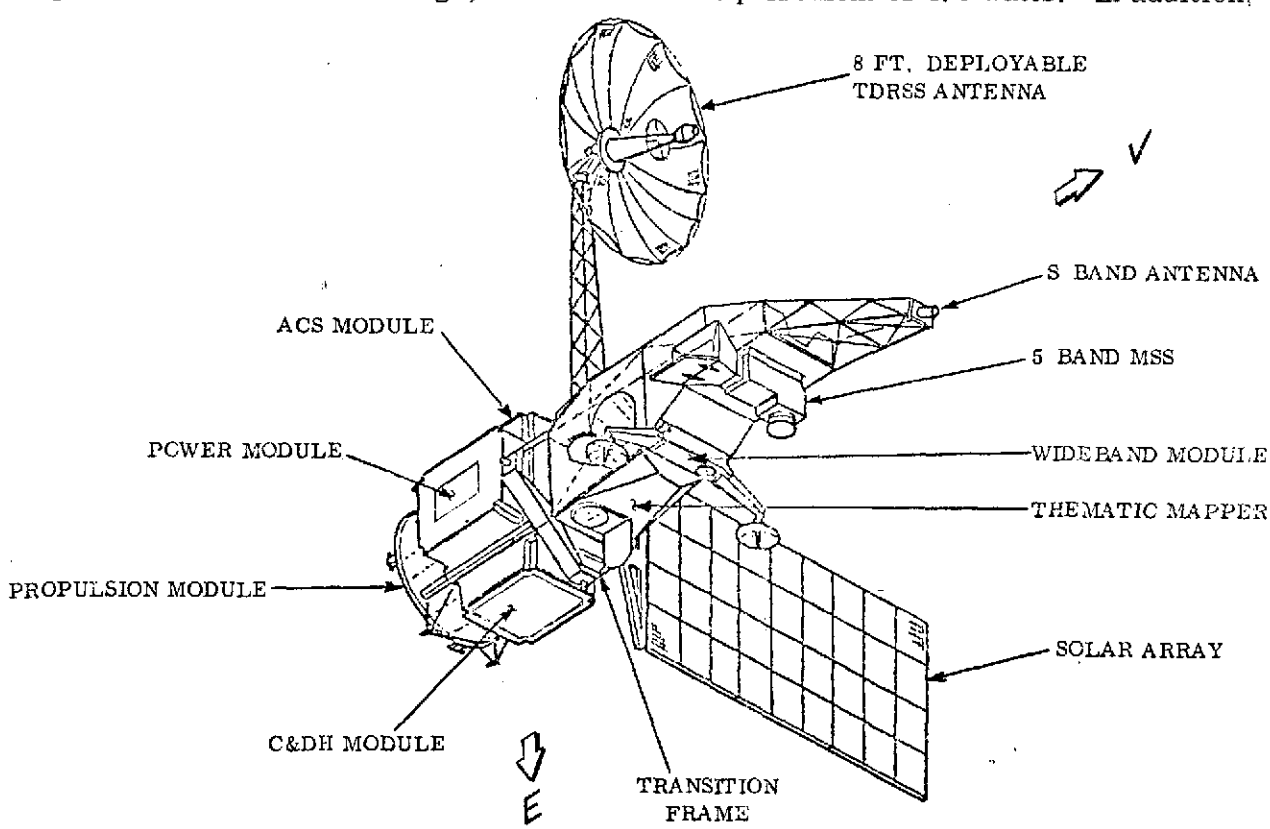

Figure 3.1-8. Orbital Configuration

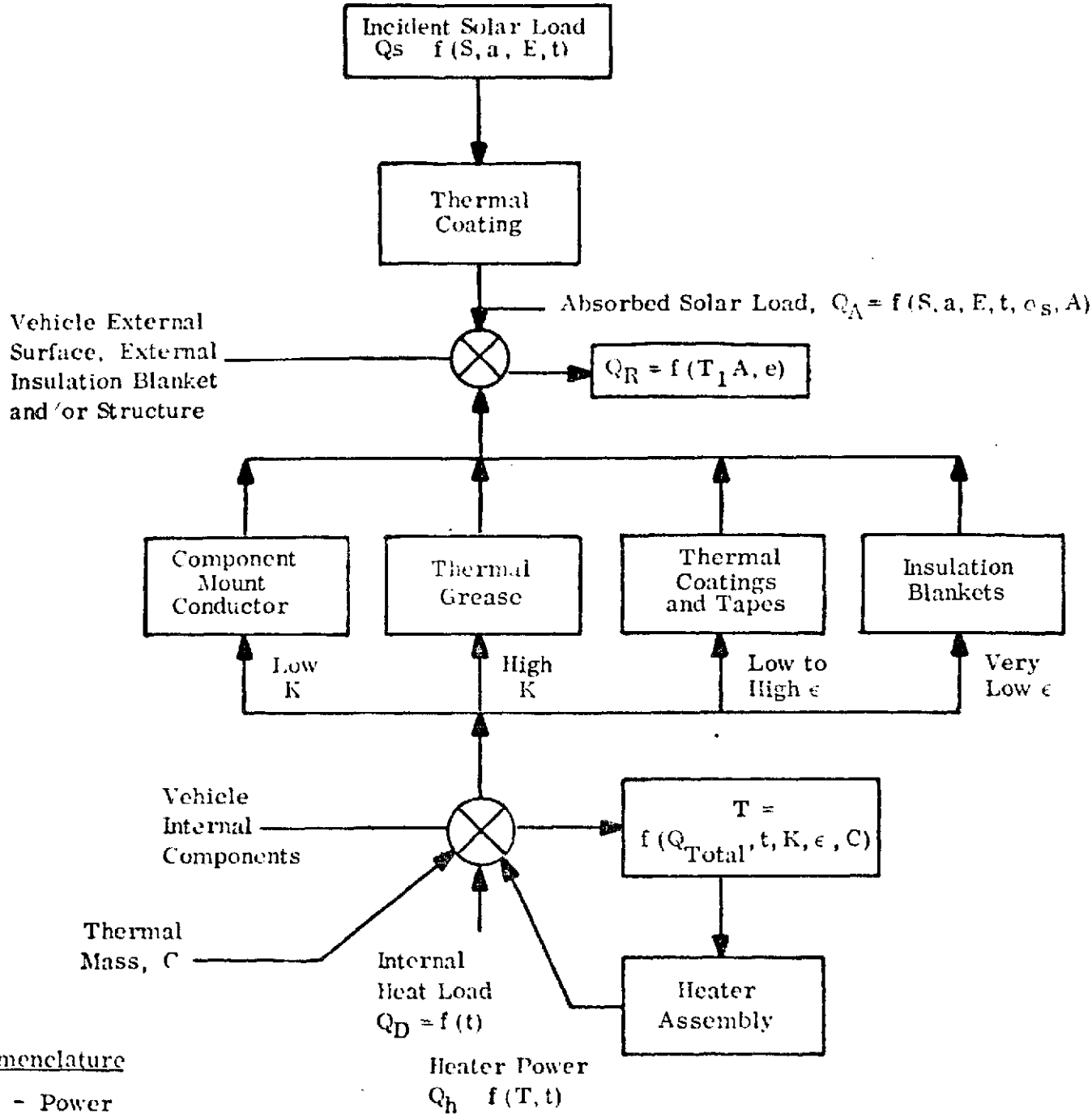

Nomenclature

Q - Power
T - Temperature
S - Solar Const.
t - Time
A - Area
α_s - Solar Absorptivity
ϵ - Hemispherical Emissivity
K - Thermal Conductivity
C - Thermal Capacitance
A - Area
a - Albedo Flux
E - Earth Flux

Figure 3.1-9. Thermal Control Subsystem Functional Schematic

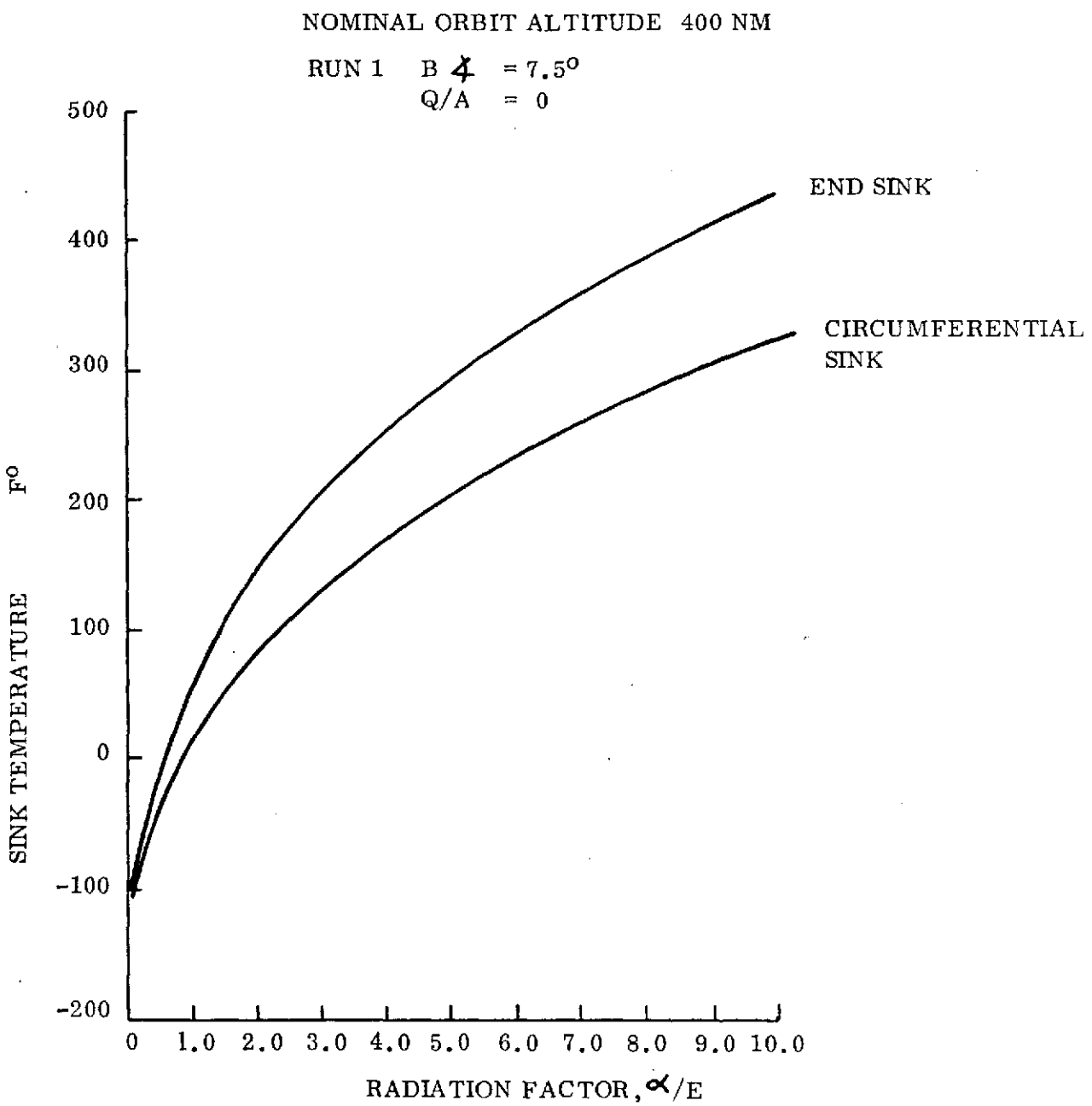

Figure 3.1-10. Sink Temperature as a Function of α/E Ratio

catalyst bed heaters will be required which are activated by command 100 minutes prior to firing. Each LTE catalyst bed heater will require 1.5 watts, an additional 12.0 watts. A total 16.0 watts of array power is required for the RCS module.

The structure is completely insulated and the average temperature controlled by the α/ϵ ratio of the external insulation blanket layer. The internal structure areas will be black anodized aluminum with maximum radiation interchange. Therefore, structure local and average temperatures will be maintained passively by maximizing internal radiation exchange, and insulating from the space environment. Average temperature levels are maintained by a balance between the average sink temperature and local heat leaks (minimized) between the subsystem modules and the structure.

3.1.2.2.2 Hardware

The basic spacecraft TCS size, weight and quantity for the thermal control subsystem components is presented in Table 3.1-4.

Table 3.1-4. TCS Size, Weight and Quantity

COMPONENT	SIZE	WEIGHT (LBS)	QUANTITY
INSULATION BLANKET	.5" x area	25.7	1 set
THERMAL COATINGS	.01" x area	2.1	1 set
THERMAL GREASE	.01" x area	0.3	A/R
STYCAST CONDUCTORS	5 in^3	0.3	A/R
THERMAL TAPES	.01" x area	0.9	A/R
THERMAL FASTENERS	.1" x area	5.1	1 set
HEATER ASSEMBLY			
HEATER	.02" x area	1.3	46
THERMOSTAT	3" x 2" x 1"	2.3	5
TOTAL		38.0	

The heater elements will be contained in a Kapton foil with each heater having a primary and back-up circuit element. The electronic thermostats will be redundant at each heater location. The multilayer insulation will consist of a 2 mil aluminized Kapton outside layer (Kapton facing out), 20 layers of 1/4 mil mylar (aluminized on both sides, vented and preshrunk), and a dacron net spacer between each layer of 1/4 mil mylar. All thermal components are flight proven.

3.1.2.2.3 Interface

The thermal control subsystem with each subsystem module component including flatness, finish, grease, bolt torque and surface emissivity requirements is specified in Table 3-1 of the Thermal Subsystem Specification (Volume 3 of Report #5). The basic spacecraft TCS requires 36 flight temperature sensors and 15 commands as defined in Tables 3-3 and 3-4 of the thermal subsystem specification.

3.1.2.3 Performance

The defined thermal control subsystem and components meet the temperature limits specified for all components for all mission phases.

3.1.2.4 Follow-on Mission Accommodations

In order to evaluate the effect of alternate missions on the baseline design, the orbit heat fluxes were established for the missions defined in Table 3.1-5. The one mission for which an orbital heat flux run was not made was the SEOS geosynchronous orbit mission which is evaluated separately. A comparison of effects on the baseline thermal design is as follows:

a) EOS Follow-on Missions

The EOS follow-on missions may vary in altitude over a range of 300 nm to 500 nm, with all other parameters similar to the baseline. The results indicate no change in the RCS or ACS module designs and only slight heat rejection/compensation heater requirement changes for the Power and C&DH modules. Thus the EOS follow-on missions provide no baseline impact.

b) Shuttle Resupply

The Shuttle Resupply varies in orbit inclination, altitude, and duration from the baseline. There is no change in the RCS or ACS module designs and only slight heat rejection/compensation heater requirement changes for the Power and C&DH Modules. The Shuttle Resupply mission provides no baseline impact.

c) Solar Maximum

The Solar Maximum mission is Sun oriented and the module surfaces receive no solar and minimal albedo flux. The results indicate that baseline coatings would result in too low temperatures for the RCS module, and costly subsystem module designs caused by the need to utilize array power (due to the variation in the heat rejection coating optical properties). Using an RCS module coating with a high α/ϵ such as Aluminized Kapton (with $\alpha/\epsilon = .16/.04 = 4.0$) on the end and gold coated ($\alpha/\epsilon = .30/.03 = 10$) on the circumference results in adequate RCS module temperature control. For the subsystem modules, changing the heat rejection coating from 5 mil Teflon over Silver to Chemglaze Z306 black paint (which does not significantly degrade) results in a satisfactory design.

d) 5-Band MSS

The 5-band MSS mission differs slightly in attitude with a range of anticipated sunsynchronous orbits. The results indicate no changes from the baseline are required.

e) Seasat B

Seasat B differs significantly from the baseline in that the sun angle will vary throughout the mission $0^{\circ} \pm 90^{\circ}$, resulting in a wide range of sinks for all equipments. The RCS module requirements can be met using a properly balanced coating which maintains an adequate average orbit temperature for all Beta angles. The subsystem module control requirements required further evaluation. The baseline coating system resulted in a comparable design for the C&DH module with heater power requirements increased to require 6.3 watts of array power for the ACS Module and 143. watts of array power for the Power Module. The wide sink variations resulted in a requirement for array power. Using an OSR thermal coating (optical solar reflector) no array power is

required for the ACS module and 72.5 watts is required for the power module. This is more cost effective than alternate active thermal control concepts. Therefore, the baseline thermal coating is changed to OSR for both the ACS and power modules.

f) SEOS

The SEOS mission is significantly different from the baseline in that the geosynchronous orbit with a 24-hour period results in long periods of solar illumination followed by long periods with no external heat inputs on each vehicle surface. Solar illumination varies both with time of day and season. In addition, the orbital thermal control concept must be augmented, if required, to protect vehicle equipments during the long transfer orbit. The baseline coatings will require 69.9 watts, 99.5 watts, and 18.4 watts respectively for the ACS, C&DH, and power modules. Although these power increases are not as costly as for the Seasat mission (since array power is cheaper at synchronous orbit), costs can be reduced by using OSR as the baseline thermal coating.

Table 3.1-5. Follow-On and Alternate Mission Environment Parameters

MISSION	EOS A	EOS FOLLOW-ON MISSIONS		SHUTTLE RESUPPLY	SEOS	SOLAR MAX.	SEASAT B	5 BAND MSS
ALTITUDE, N.M.	418	300 to 500	300 to 500	300	19,323	285	324	500
ATTITUDE	← 3 axis control →							
ORIENTATION	Earth	Earth	Earth	Earth	Earth	Sun	Earth	Earth
INCLINATION	99° Sun Syn.	103° Sun Syn.	99° Sun Syn.	28.5°	Geo Syn.	30°	90°	99° Sun Syn.
ASC. NODE TIME	2330	1200	2330	----	-----	1200	----	2330/ 0930
LIFE TIME	2 yrs.	2 yrs.	2 yrs.	7 days	2 yrs.	1 yr.	5 yr.	1 yr.
BETA ANGLE VARIATION, DEGREES	7.5 ± 5.	0 ± 5	7.5 ± 5.		0 ± 23.5	N/A	0 ± 90	7.5 ± 5 37.5 ± 8

3.1.2.5 Alternatives

Alternate thermal control concepts considered included using the intermediate radiator, louvers, and heat pipes. These alternatives were all found to be more costly than the passive concept defined as long as adequate solar array area is available. These cost tradeoffs are discussed in detail in Report #3.

3.1.3 BASIC SPACECRAFT PROPULSION (REACTION CONTROL) SUBSYSTEM

The propulsion subsystem for the basic spacecraft provides the primary reaction control capability for initial attitude acquisition or reacquisition and provides backup capability for momentum wheel unloading and limit-cycle attitude control. The propulsion for orbit transfer and orbit adjust are mission peculiar and are discussed in Section 3.2.4.

The Reaction Control Subsystem (RCS) selected (Reference Report #3) as the most cost effective and flexible propulsion type for either Delta or Titan launched spacecraft was a mass expulsion,monopropellant,hydrazine fueled propulsion system. The propellant supply system consists of a single tank for the storage of both the propellant and pressurants. The supply system operates in a blow-down mode during which the engine thrust decays over a range of approximately 3 to 1 as propellant is consumed from the storage tank. This type of system affords the advantages of low cost and simplicity of design when compared to other available propellant type designs.

Operation of the RCS requires electrical power to open the desired engine propellant control valve. Opening of this valve permits the flow of hydrazine propellant through an injector into a combustion chamber containing a catalyst. Within the chamber the catalyst spontaneously decomposes the hydrazine into ammonia, hydrogen and nitrogen gases at a reactive temperature of approximately 1800°F. These gases are then expanded through a conical nozzle to produce the desired thrust.

3.1.3.1 Subsystem Requirements

The RCS provides the reactive torques to the spacecraft which are required for accomplishing initial spacecraft stabilization and restabilization and for maintaining spacecraft attitude control during periods of momentum dumping. Table 3.1-6 presents a listing of the specified primary and backup RCS requirements and the total impulse necessary to accomplish each of these functions. Three worst case restabilizations and backup momemtum for one year has been assumed. Using these values, the requirements presented in Table 3.1-7 can be derived for the hydrazine type RCS based upon typical attainable performance values. As shown in Table 3.1-7, the RCS functions for the EOS mission will require the expenditure of 18.8 pounds of hydrazine propellant.

Table 3.1-6. Reaction Control Subsystem Specified Requirements

o MISSION ORBIT	775 Km (418 nm) Circular
o MISSION LIFETIME	2 Years
o SPACECRAFT WEIGHT	2200 Lbs plus propulsion
o SPACECRAFT M OF I	500 to 2500 Slug Ft^2
o RCS THRUSTER TORQUE ARM	5 Ft.
o SHUTTLE COMPATIBLE	
o ENERGY REQUIREMENTS (SEE BELOW)	

FUNCTIONS	TOTAL IMPULSE (LB_f-SEC)
o PRIMARY	
INITIAL STABILIZATION	100
THREE RESTABILIZATIONS	300
o BACKUP	
ONE YEAR MOMENTUM UNLOADING	2000
30 DAY LIMIT CYCLE CONTROL	275

Table 3.1-7. Reaction Control Subsystem Derived Requirements

MANEUVER	TOTAL IMPULSE (LB_f-SEC)	ENGINE ON-TIME (SEC)	SPECIFIC IMPULSE (SEC)	PROPELLANT REQ'D (LB_m)	THRUST LEVEL (LB_f)
INITIAL STABILIZATION					
1. RATE REMOVAL	50	1.0	150	0.33	0.28
2. REORIENTATION	20	1.0	150	0.14	Decaying To
3. REFERENCE SEARCH	20	1.0	150	0.14	
4. LIMIT CYCLE	10	0.007	105	0.10	
RESTABILIZATION	300	1.0 & 0.007	140	2.14	
MOMENTUM UNLOADING	2000	1.0	150	13.33	
30 DAY LIMIT CYCLE	275	0.007	105	2.62	0.10
	2675			18.8	

3.1.3.2 Subsystem Baseline Description

3.1.3.2.1 Functional Block Diagram

The RCS functional block diagram is shown in Figure 3.1-11. The propellant and pressurant for the RCS is stored within a spherical pressure vessel. The tank may contain either an elastomeric positive expulsion diaphram for separation of the pressurant from the propellant or a surface tension type propellant management device which retains the propellant at the tank outlet port for full time availability to the engines under all on-orbit operating conditions. The tank has a manually operated fill and vent valve on the pressurant side and a fill and drain valve on the propellant side. These are provided for propellant and pressurant loading and unloading. A pressure transducer is located in the outlet line from the propellant tank the output of which can be monitored periodically via telemetry as a "health check" of the system and to determine the quantity of propellant available.

Propellant flowing from the tank is filtered through a high capacity, low micron rating etched disc filter. The RCS filter is located upstream of the isolation valve and the engines in order to provide adequate contamination protection for these principal RCS components. A propellant isolation valve of the latching type is located in the propellant feed line. The basic function of the latching valve is to isolate the propellant tank from the engine thruster group during long periods of RCS non-usage. Downstream of the latching valve, distribution piping is used to feed propellant to each of the eight Rocket Engine Assemblies (REA). Each REA consists of a solenoid operated propellant control valve and a thrust chamber. The thrust chamber consists of a propellant injector, a spontaneous catalyst (SHELL 405) and a converging-diverging conical nozzle. Operation of the solenoid valves by an electrical command permits the flow of propellant into the chamber where the catalyst decomposes the hydrazine into hot gases which are expanded through the nozzle to produce the desired thrust. Each REA includes a catalyst bed heater located on the external wall of the thrust chamber. The catalyst bed heaters are controlled by ground commands and are used to enhance engine start life. Each REA includes platinum wire resistance type temperature sensors on the thrust chamber. The function of these temperature sensors is to monitor heater operation and preclude the flow of propellant into a cold ($35^{o}F$) catalyst bed thereby preventing failure of the thruster during REA start-up. The entire

system upstream of the REA propellant control valve seats will be of all-welded construction to assure leak tight integrity and propellant compatibility.

The subsystem electrical interface consists of a connector panel through which power and command signals are supplied to the REA propellant control valves, REA heaters and latching valves and through which temperature, pressure and latch valve position monitoring signals are received. The RCS REA propellant control valves are supplied power through valve driver circuits located in the Driver Electronics Box in the Attitude Control Module. All other component power is supplied by, and signals are received by, the Signal Conditioning and Control Module.

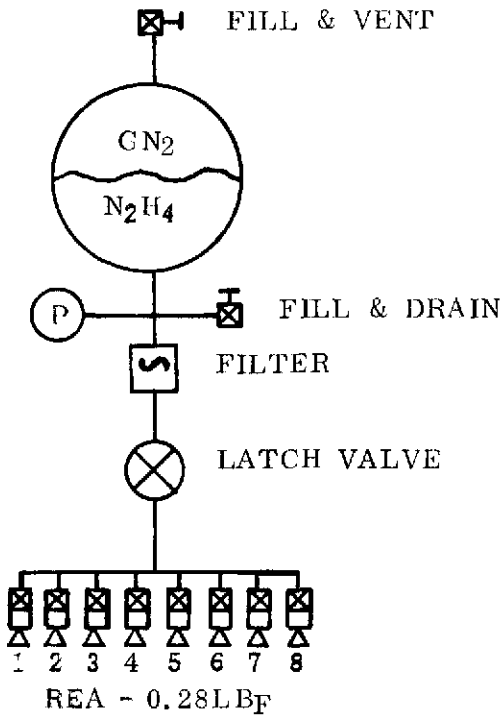

Figure 3.1-11.
Reaction Control Subsystem

3.1.3.2.2 Subsystem Characteristics

The weight summary for the hydrazine RCS is shown in Table 3.1-8. Component weights are based on actual flight qualified hardware. When loaded with propellant and pressurant, the RCS would weigh approximately 40 pounds (Dependent upon final tank selection).

The RCS thrusters are positioned in bow-tie configuration at four locations near the aft end of the spacecraft as depicted in Figure 3.1-12. This configuration provides three axis motion of the spacecraft using a minimum number (eight) of REA's.

The modular packaging design of the RCS is shown in Figure 3.1-13 and described in more detail in the Structure/Mechanical section of this report.

SPACECRAFT AFT END

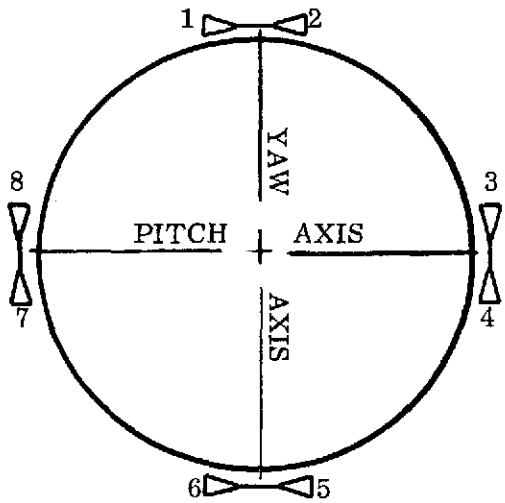

Function	Engine Usage
+ Roll	1 and 5 or 3 and 7
- Roll	2 and 6 or 4 and 8
+ Pitch	3 and 8
- Pitch	4 and 7
+ Yaw	2 and 5
- Yaw	1 and 6

Figure 3.1-12. Reaction Control Subsystem Thruster Orientation

3.1.3.2.3 Subsystem Components

The RCS propellant tank is used for long term propellant storage and must provide for orientation and positive expulsion of hydrazine propellant under the adverse environmental conditions of spacecraft induced accelerations and of low gravity forces. This function can be accomplished either by use of a rubber expulsion diaphragm or a surface tension type propellant management device. Both types of expulsion devices are available in off-the-shelf qualified tanks in the size range of interest for the spacecraft. A summary of these tanks, presented in Table 3.1-9, shows an availability of four tanks, two of which contain rubber bladders and two containing surface tension devices. Final selection of the optimum tank size and the type of expulsion device will be made during a later program phase. As a baseline, the 13.4" tank with a surface tension device has been selected.

All RCS components, excepting the propellant tank, are summarized in Table 3.1-10. Presented in the table is the qualification status and the flight history of each component. As can be seen from the table, all components are qualified and are currently being procurred for the General Electric designed Broadcast Satellite, Experimental (BSE).

Table 3.1-8. Reaction Control Subsystem Weight Summary

COMPONENT	UNIT WEIGHT (LBS)	NO. REQ'D	TOTAL WEIGHT (LBS)
ROCKET ENGINE ASSEMBLY (0.28LBF)	0.36	8	2.88
PROPELLANT TANK	4.00	1	4.00
FILL AND VENT VALVE	0.11	1	0.11
FILL AND DRAIN VALVE	0.11	1	0.11
PRESSURE TRANSDUCER	0.16	1	0.16
FILTER	0.22	1	0.22
LATCHING VALVE	0.52	1	0.52
WIRE HARNESS		A/R	2.00
MISC.		A/R	10.00

DRY WEIGHT	20.00
MISSION PROPELLANT	18.80
LOADING ERRORS, ETC.	0.28
PRESSURANT	0.57
RCS LOADING WEIGHT	39.65

Table 3.1-9. Reaction Control Subsystem Propellant Tank Candidates

TANK DIA. (in.)	PROGRAM USAGE	TYPE OF EXPULSION DEVICE	VOLUME (in^3)	PROPELLANT CAPACITY (LBm)	TANK WEIGHT (LBm)	TANK MFR.
12.9	CTS (Canada)	EPT-10 Bladder	1080	27	5.5	P.S.I.
13.4	Classified (LMSC)	Surface Tension	1166	30	4.0	P.S.I.
16.5	BSE (GE)	EPT-10 Bladder	2300	55	8.5	P.S.I.
16.5	Sat Comm (RCA)	Surface Tension	2350	55	5.3	Fansteel

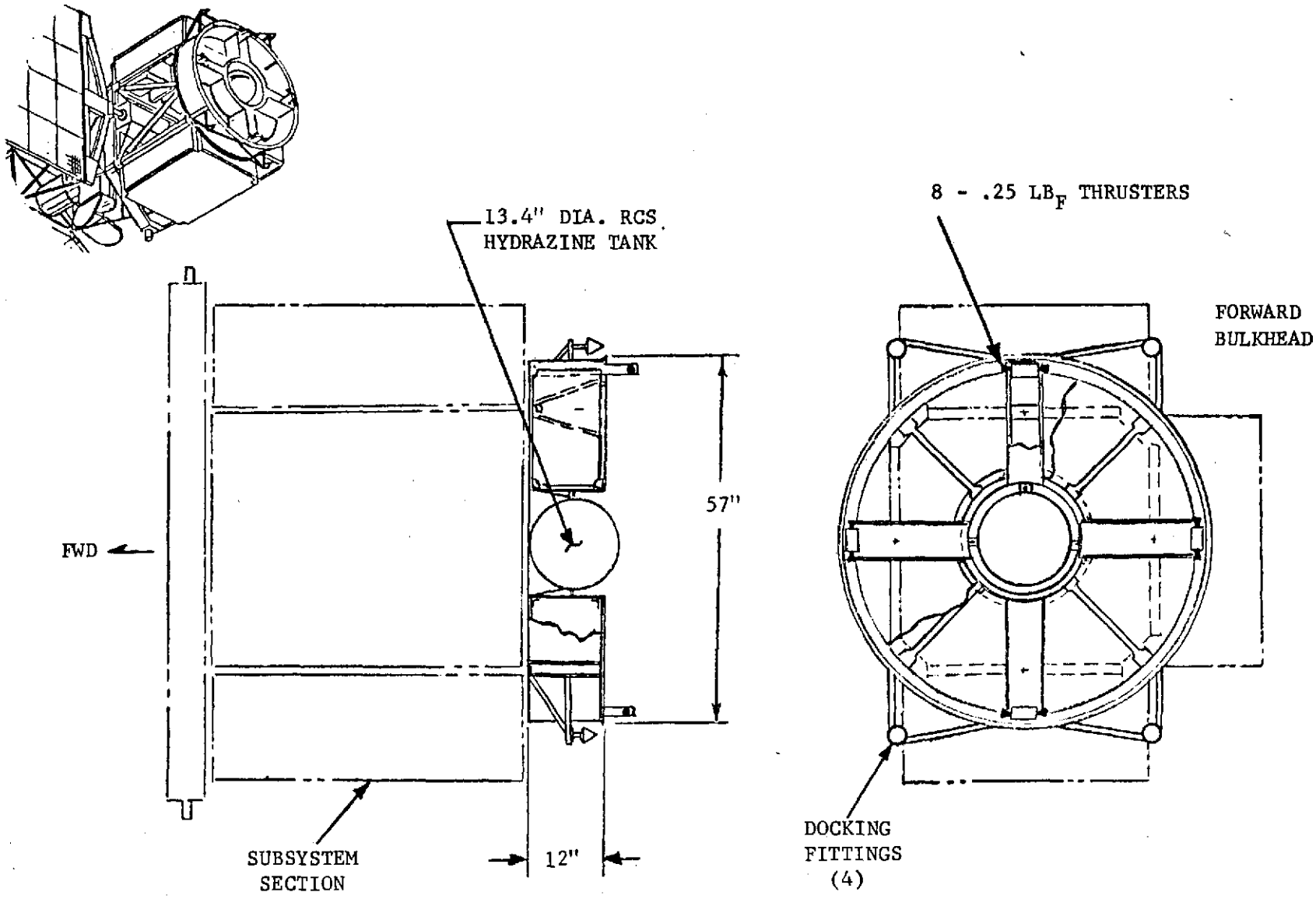

Figure 3.1-13. RCS Module

Table 3.1-10. Reaction Control Subsystem Component Program History

RCS COMPONENT	COMPONENT SUBASSEMBLY	SUPPLIER	FLIGHT HISTORY	QUALIFIED APPLICATIONS
FILL & DRAIN/VENT VALVES	-	Pyronetic	None	BSE, CTS
PRESSURE TRANSDUCER	-	Bourns	Saturn	BSE, CTS
LATCHING VALVE	-	Hydraulic Research & Manufacturing Company	RAE-B	BSE SMS CTS FSC
FILTER	-	Vacco Industries	Intelsat IV RAE-B	BSE, CTS
REACTION CONTROL LOW THRUST ENGINE ($0.28\ LB_F$ THRUST)	Thrust Chamber Assembly	Hamilton Standard	SOLRAD X	BSE NRL-MSD CTS
	Thrust Chamber Valve	Wright Components	SOLRAD X	BSE NRL-MSD CTS
THRUST CHAMBER HEATER (LTE)	-	Thermal Systems, Inc	None	BSE, CTS
ENGINE TEMPERATURE SENSOR	-	TSI	None	BSE CTS: P-50
TANK TEMPERATURE SENSOR		Gulton	Apollo	BSE, CTS

3.1.3.3 Subsystem Performance

The RCS Low Thrust Engines (LTE) operate in a varying thrust mode as propellant is consumed from the propellant tank. Thrust performance varies as a function of tank pressure throughout a typical blowdown range of 340 psia to 115 psia as presented in Figure 3.1-14. The engine steady state specific impulse throughout this range of pressure is shown in Figure 3.1-15.

Reaction control functions for the spacecraft require that the LTE operate basically in a pulse mode. Stabilization functions are accomplished through the use of long pulse durations approximating 1.0 second in length while momentum dumping utilizes a shorter pulse width of 0.1 second duration. The limit cycle function will use pulse duration no shorter than 7 milliseconds which represents the lower limit of electrical pulse width to which the LTE engine was qualification tested. Figure 3.1-16 provides a plot of specific impulse performance as a function of decaying tank pressure for the LTE operating for a 1.0 second pulse duration followed by a very long off time. Figure 3.1-17 presents plots of minimum, nominal and maximum impulse bits (the area under the thrust versus time curve) as a function of LTE electrical pulse widths ranging from 7 milliseconds to 1.0 seconds in duration. The performance level for the LTE operating in the 7 millisecond pulse width for the limit cycle mode yields a specific impulse in excess of 105 seconds.

3.1.3.4 Follow-On Mission Accommodation

Except for the SEOS mission, the proposed RCS design accommodates all missions subsequent to EOS-A with no configuration changes. The SEOS mission, because of its long duration, would require the addition of low thrust engines to provide redundancy in the pitch and yaw axis attitude control. This redundancy could be provided by the addition of four thrusters.

3.1.3.5 Alternatives

An alternate design to the hydrazine RCS system is a high pressure pneumatic subsystem utilizing gaseous nitrogen as the energy source. When compared to a liquid hydrazine system, the pneumatic system has the following shortcomings:

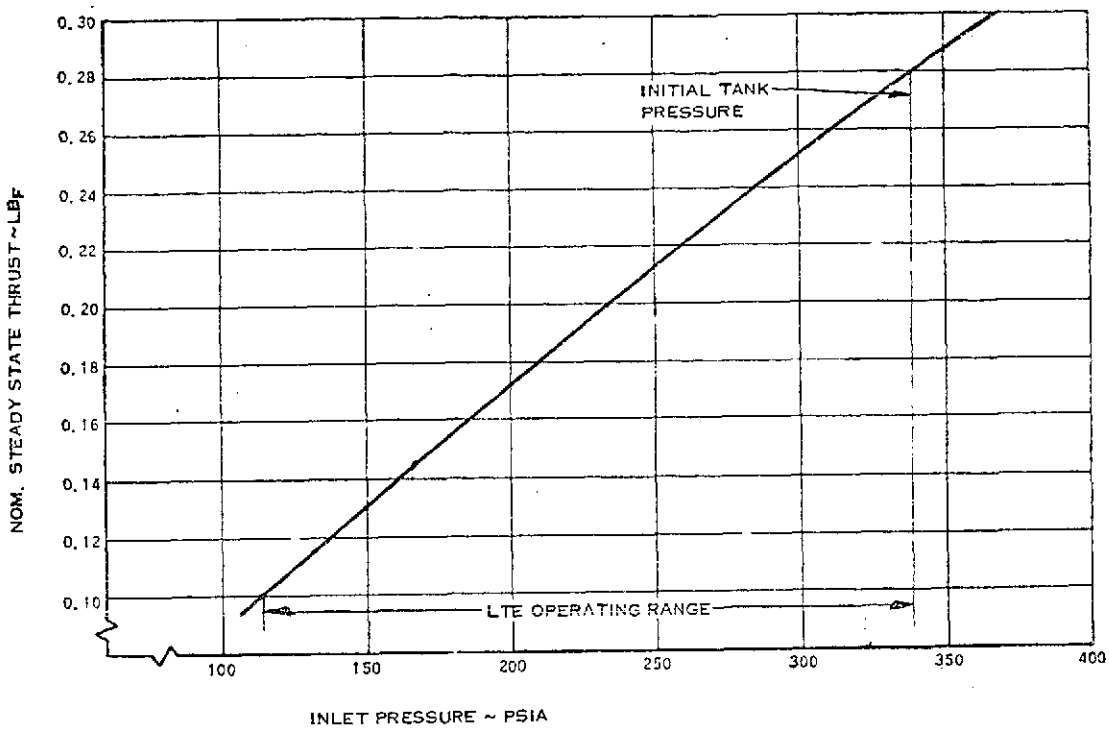

Figure 3.1-14. RCS Low Thrust Engine Thrust vs. Inlet Pressure

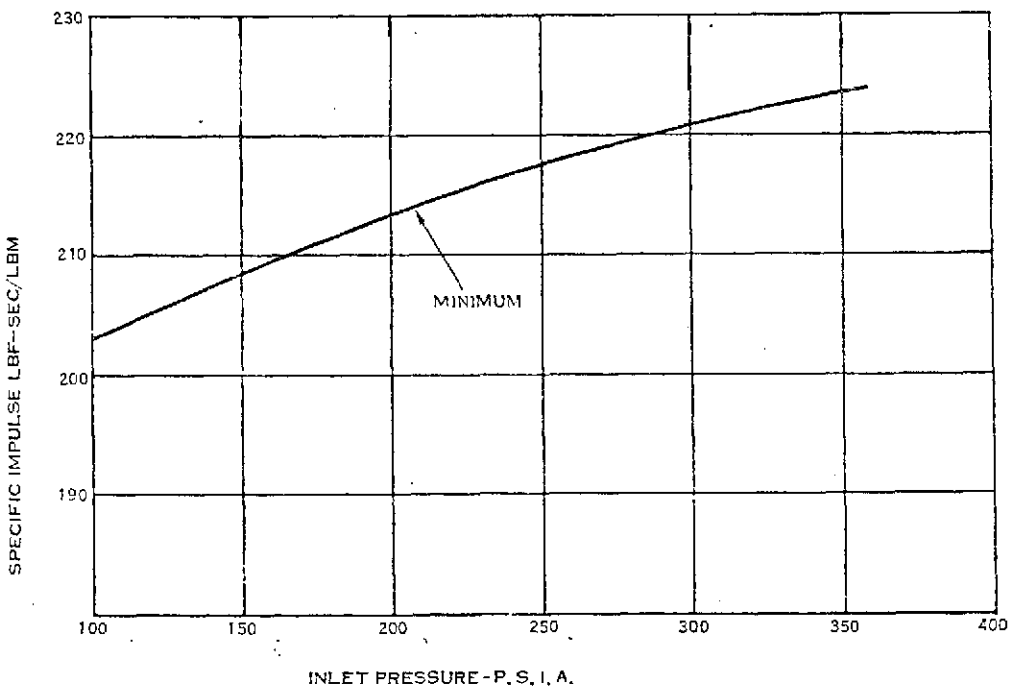

Figure 3.1-15. RCS Low Thrust Engine Steady State Specific Impulse vs. Inlet Pressure

a. Higher system cost

b. Limited flexibility for integration with the mission peculiar propulsion systems.

c. Higher system weight

The detailed trade is presented in Report #3.

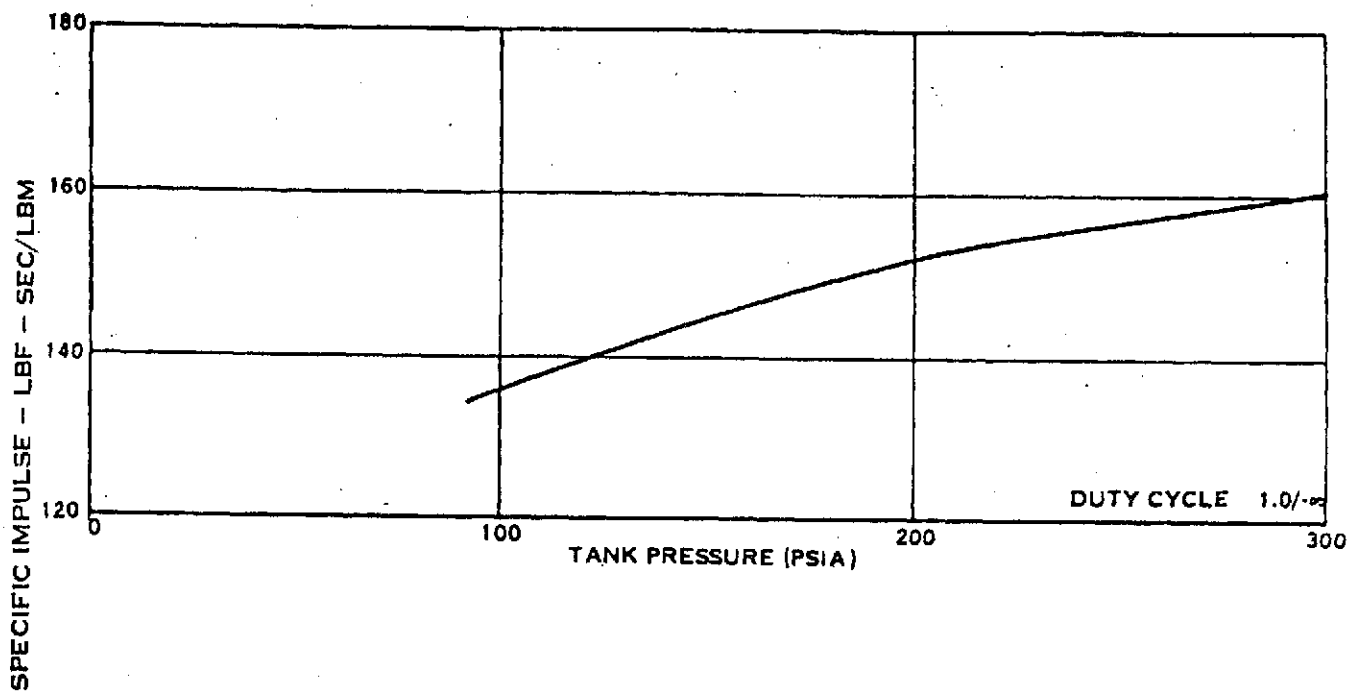

Figure 3.1-16. RCS Low Thrust Engine Average Specific Impulse vs. Tank Pressure

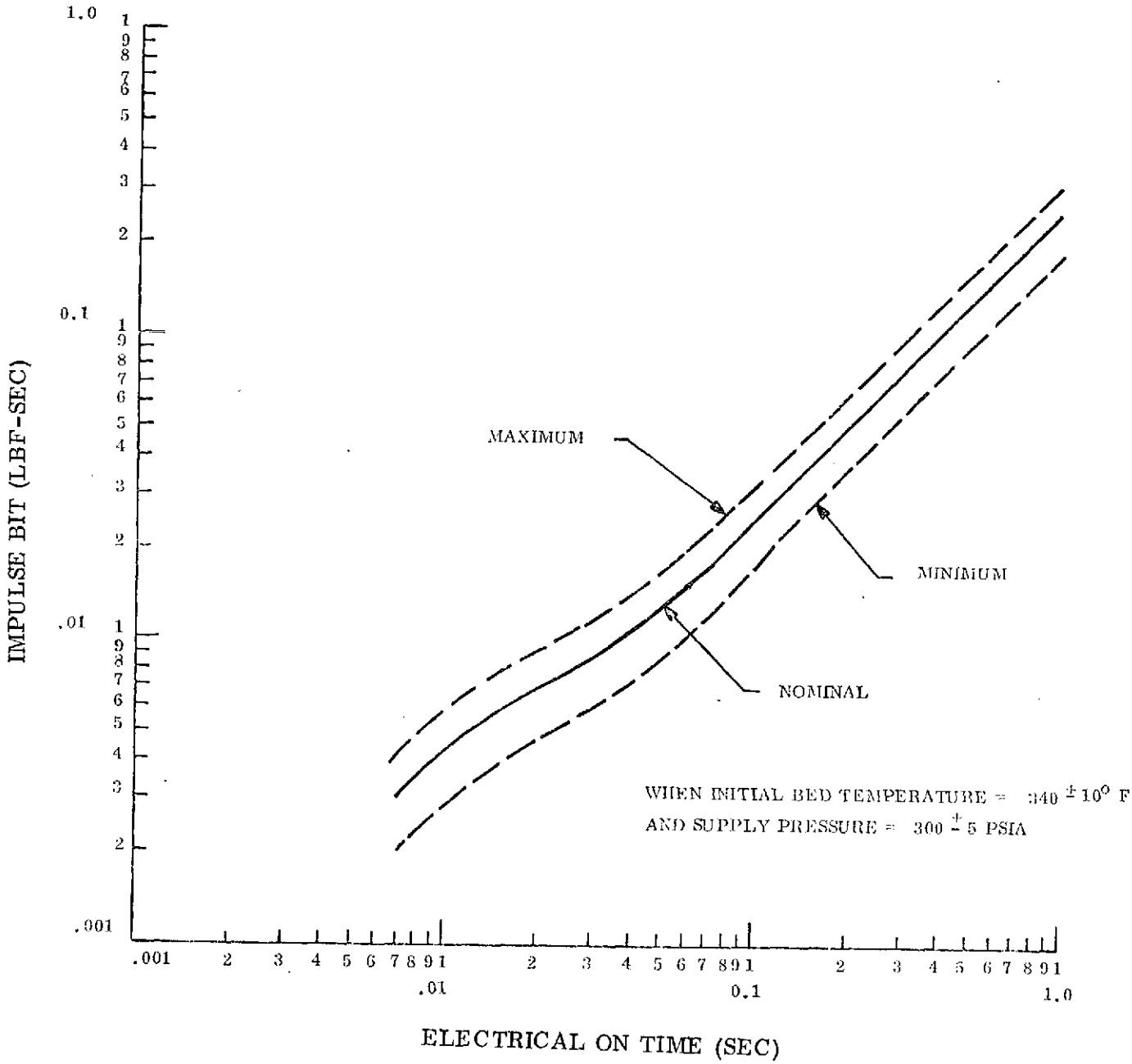

Figure 3.1-17. RCS Low Thrust Engine Single Pulse Impulse Bit vs. On Time

3.1.4 ATTITUDE CONTROL SUBSYSTEM MODULE

The Attitude Control Subsystem (ACS) provides the normal functions of attitude acquisition or reacquisition and precision attitude control. It also provides a backup attitude hold mode and control during orbit adjust or orbit transfer on mission requiring these functions. These functions are physically implemented in the ACS Module, but require the data transfer and processing capabilities provided by the C&DH Module. The interface with, and the (software) functions implemented within, the C&DH module in support of the ACS functions are discussed in this section.

3.1.4.1 Requirements

The attitude control pointing requirements , as defined by the GSFC specification are shown in Table 3.1-11. The presence of position, rate, and time information allows formulation of the requirements into a sine wave amplitude versus frequency chart (Figure 3.1-18). The attitude requirement of 0.01 degrees is a "static" requirement which dominates (at low frequencies) until the rate term overrides.

The rate requirement is specified as a rate (10^{-6} deg/sec) for a specific time (1800 seconds). The interpretation given to the requirement is that the spacecraft must not change attitude by more than .0018 degrees (1800 seconds x 10^{-6} deg/sec) in 1800 seconds. This is converted to an amplitude versus frequency curve by the equation

$$.0009^{o} \leq \theta_{o} \text{ Sin } (900 \text{ W}). \quad \text{W = Sine Wave Frequency}$$

The half amplitude and half time period are used in this equation because the rate requirement is a peak to peak requirement, not a zero to peak (i.e. jitter type) requirement. The equation produces a linear amplitude/frequency curve at low frequencies, but reaches a constant amplitude curve at a frequency of $1.74 \cdot 10^{-3}$ rad/sec (π/1800). At this frequency, the amplitude cannot exceed $.0009^{o}$ or the requirement will not be met.

The jitter requirements are amplitudes of .0006 degrees and .0003 degrees at frequencies of $5.23 \cdot 10^{-3}$ rad/sec (2 π/1200 sec) and .21 rad/sec (2 π/30 sec) respectively.

The requirements presented in Figure 3.1-18 apply to local vertical pointing (pitch and roll errors), and yaw pointing (orientation about the local vertical) for earth oriented missions.

Table 3.1-11. ACS Requirements of Goddard Specification

MISSION TYPES	ATTITUDE (All Axes)	RATE/TIME (All Axes)	JITTER/TIME (All Axes)	COMMENTS
EARTH ORIENTED	$\pm .01^{o}$	$\pm 10^{-6^{o}}$/sec/30 min.	$\pm .0003^{o}$/30 sec $\pm .0006^{o}$/20 min	
INERTIAL	$\pm .01^{o}$	$\pm 10^{-6^{o}}$/sec/30 min.	$\pm .0006^{o}$	Jitter is relative to average rate.
STELLAR PAYLOAD	$\pm 3 * 10^{-6^{o}}$		$\pm 10^{-7}$	Jitter is relative to average rate. Attitude excludes sensor error
OPERATING MODES				
ACQUISITION	$\pm 2^{o}$	$\pm .03^{o}$/sec		Requirements are from initial values of 1°/sec and random initial attitude.
INERTIAL HOLD		$\pm .003^{o}$/hr		$.03^{o}$/hr prior to in-orbit calibration
COARSE HOLD	$\pm 7^{o}$	$\pm .05^{o}$/sec		Attitude is total attitude error to sun. 30 day life requirement.
SLEW	$\pm .03^{o}$	2°/min		Rate is a slew capability. Accuracy is after a 90 degree slew.

* With the Payload as the Sensor

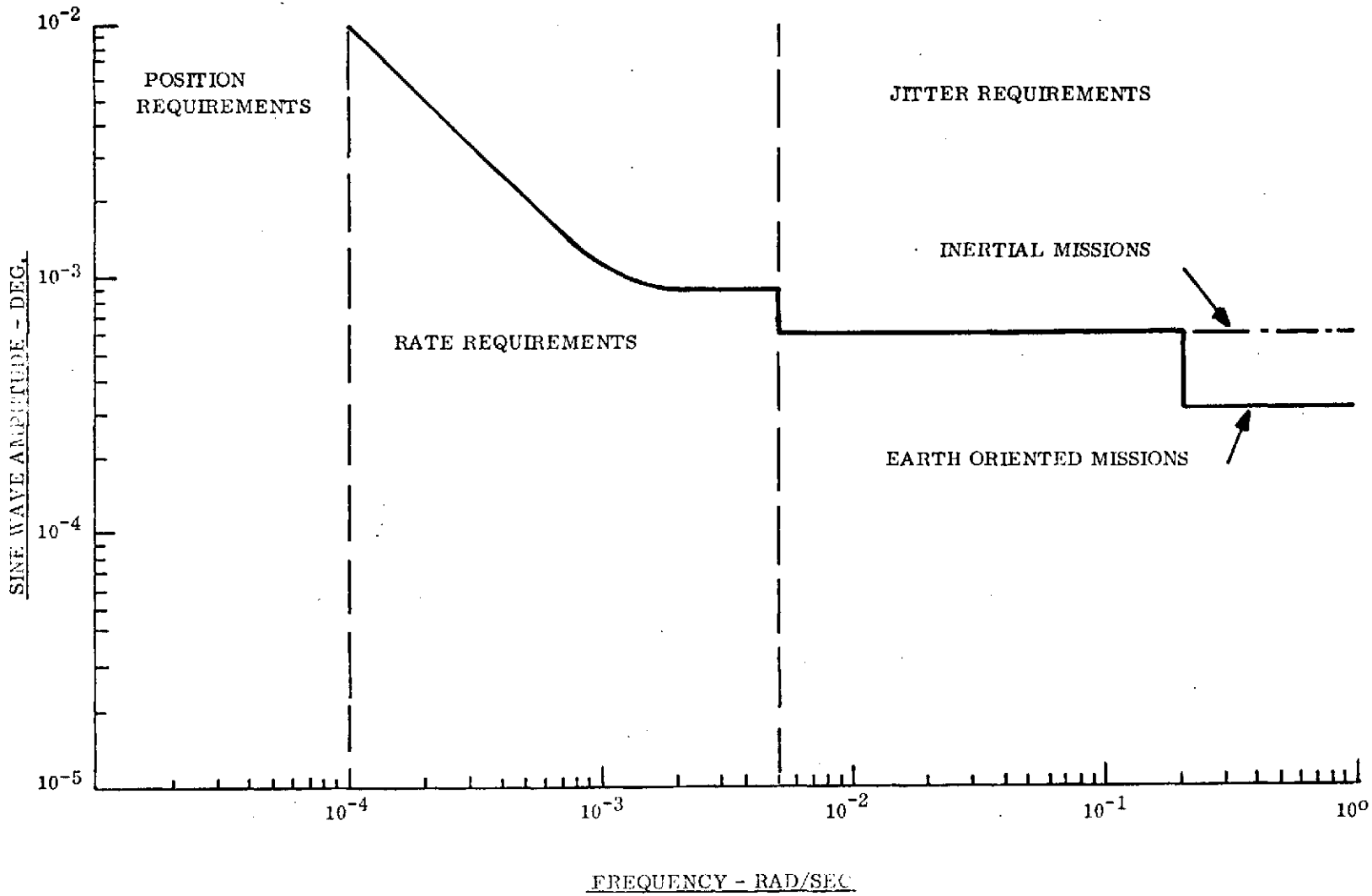

Figure 3.1-18. Spacecraft Attitude Requirements

For inertial missions, they apply to pointing with respect to an inertial reference frame on a per axis basis.

The requirements for the stellar payload are considerably tighter than the earth oriented mode, as indicated in Table 3.1-11. A direct evaluation of the severity of the requirements cannot be made until the nature of the payload sensor, which is the primary attitude sensor, is defined. Based upon OAO operations, however, it is felt that the accuracy can be met. The jitter requirement must be evaluated along the lines of the earth observatory missions since the primary source of jitter is internal to the spacecraft.

The requirements on the other operating modes are also shown in Table 3.1-11. These modes, and their requirements are self-explanitory with the exception of the coarse mode. It is assumed that the coarse mode serves to backup the on-board computer only, and that in the coarse mode, the Inertial Reference Unit (IRU), the Propulsion Reaction Control Subsystem (PRCS) and the sun sensor are operating. For a malfunction of the IRU, the redundant gyro would be used.

3.1.4.2 Description

3.1.4.2.1 Functional Description

The ACS has four distinct modes of operation - normal, acquisition, backup, and orbit adjust/transfer. Each of these modes is independent of the other, and would normally be entered only by ground command from the Operations Control Center.

3.1.4.2.1.1 Normal Operating Mode

The block diagram of the normal mode section of the ACS, including the relevant software routines for the on-board computer (OBC) is shown in Figure 3.1-19. Primary attitude control is accomplished by the Inertial Reference Unit and the twelve software routines shown on the Figure. The IRU consists of three double degree of freedom gyros which redundantly sense the spacecraft angular rates in three axes. The gyros operate in a pulse rebalance mode, with a .06 sec pulse weight. The pulse weights are summed up in an output counter of sixteen bits, which is interrogated and zeroed every 500 milli-seconds. The output of the IRU represents the integral of the rate over that time period.

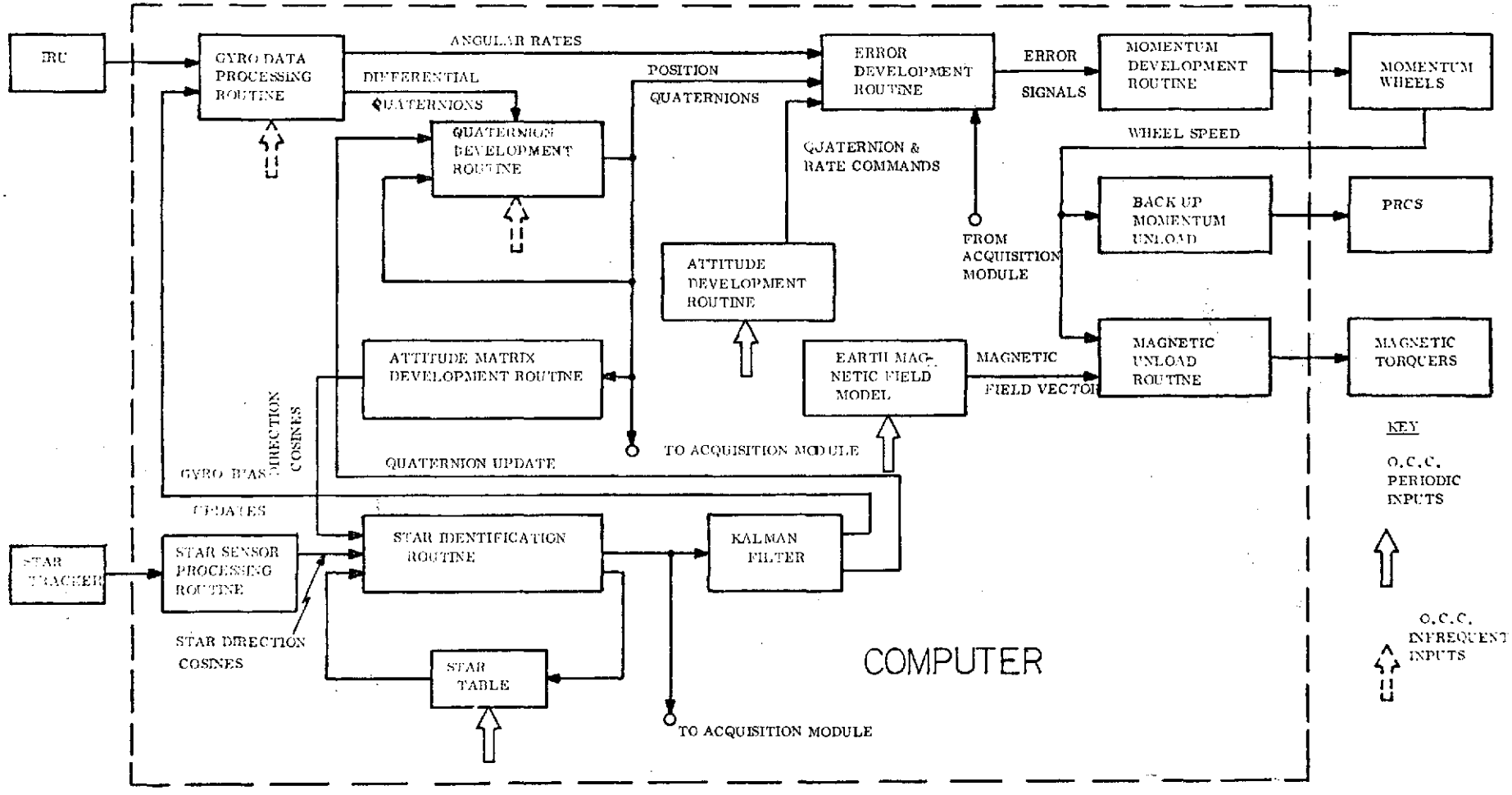

Figure 3.1-19. Attitude Control Subsystem Normal Operating Section

To accommodate both the low rates (.06 deg/sec maximum) and rates of 1 deg/sec, the gyros have two scales; zero to .2 deg/sec and zero to 3 deg/sec.

The outputs of the IRU counters are processed by the OBC in the Gyro Data Processing Routine which corrects the output for gyro "bias," misalignment (including non-orthogonality) and scale factor. Payload misalignments are also corrected within this subroutine, but by ground update. The spacecraft rate is calculated in the Data Processing Routine by dividing the corrected angular position change by the integration interval. This is performed every interrogation interval (500 milliseconds). The corrected angular changes are further summed within the On-Board Computer for a period of one second, converted to differential quaternions and used to update the estimate of the spacecraft attitude (Quaternion Development Routine). With this approach, the angular rates calculated by the gyros and OBC are not integrated by the computer to obtain the new spacecraft position. Integration is performed by the gyros (which are excellent integrators) with the computer correcting for collocation. This approach reduces the computer load, and for the EOS type mission produces a negligible calculation error (less than 1 arc second over 1000 seconds).

The attitude profile is calculated within the Attitude Development Routine, which outputs the required quaternions and angular rates. The coefficients for the routine are uplinked in advance based upon ground computation of projected spacecraft ephemeris. The attitude error is calculated in the Error Development Routine which calculates the error quaternions. The first three of these quaternions are combined with the rate error calculation to provide error signals for the Momentum Development Routine.

The Momentum Development Routine multiplies the error signals by the moments and products of inertia of the spacecraft to obtain momentum wheel commands, and applies whatever control loop compensation is necessary. The moment of inertia correction permits the spacecraft to provide high accuracy stabilization in the presence of products of inertia, and "equalizes" the gain of the three control loops. The output of the Momentum Development Routine is sent to the momentum wheels and the propellant reaction control subsystem. The propellant reaction control subsystem (PRCS) is used only in the early stages of the normal operation to ensure that the momentum wheel level is low enough to permit normal control.

The momentum wheels are controlled by the OBC through the drive electronics at a command rate of two commands per second. The momentum wheels are of the "constant torque" type with a torque output which is essentially independent of speed. An advantage of this type of wheel is that high angular momentums can be obtained with small signals. This results in a small "standoff" error compared to linear torque speed wheels. The error is further reduced by using a position integrator in the forward loop.

To provide the high accuracy required of the ACS, the IRU must be updated periodically to correct for drift and/or slow changes in gyro characteristics (scale factors, etc.). The update is provided by the star sensors in conjunction with a star table. The star sensor outputs the star magnitude, and the x and y offsets of the star within the sensor field of view. The x and y offsets from the star tracker are converted to line of sight by correcting for optical and electronic distortion. This conversion is done within the Star Sensor Processing Routine. The sub-routine is primarily a table with an interpolation scheme. The table is obtained from the Star Tracker contractor prior to flight.

After the line of sight has been determined, the OBC executes a search of the star table and performs a line of sight (LOS) check (dot product). When the LOS check is passed, the star is considered identified. The remaining software package is the Kalman Filter. The purpose of the Kalman Filter is to calibrate the gyros based upon the star transit information, and enable the computer to provide a better estimate of the spacecraft attitude between transits. After the filter is initialized, and has calibrated the gyros, it can weight the star transit information, and attenuate the effect of Star Tracker noise. It then provides an update of the spacecraft attitude at the time of the star transit which corrects for uncalibrated gyro drift and noise.

To precisely calibrate a gyro, four parameters must be determined; drift, scale factor (assuming a linear scale factor) and two alignment terms. For the IRU, therefore, there are twelve parameters which must be determined. However, the repetitive nature of the spacecraft attitude motion prevents all of these parameters from being determined (or required). For example, a scale factor cannot be isolated from bias since the spacecraft rotates at a nearly constant orbital rate about pitch, and errors can be explained by scale factor or a bias. An evaluation of the filter indicates that for normal

operation, all of the parameters can be "lumped" into three bias terms. These terms are not physical gyro terms, but combine drift, misalignment and scale factor effects, and represent a correction which must be added to the IRU's output to minimize attitude error between star transits.

The bias terms calculated by the Kalman Filter are valid for normal operation, but will be in error if the spacecraft departs from its normal attitude profile. For a mission such as OAO, which requires spacecraft manuevers, the twelve parameters must be found separately, preferable by ground processing of maneuver data. However, for earth oriented missions of the EOS type, the bias terms provide the required accuracy.

The remaining software subroutines shown in the block diagram of Fig. 3.1-19 provide the magnetic unloading capability. The Earth Magnetic Field Model calculates, as a function of spacecraft orbital position, the magnetic field at the spacecraft. The field is calculated from a simple dipole magnet model which has been shown to be adequate (Reference Report III). The OCC updates the spacecraft ascending node time to prevent the model from "drifting". The Magnetic Unloading Sub-routine combines the momentum wheel speeds with the magnetic field vector according to a cross product law and outputs commands to the magnetic torquers. The torque is always in opposition to the existing wheel momentum vector.

In the event that the magnetic torquers fail, or that the spacecraft orientation is totally unknown, momentum unloading is accomplished through the PRCS. Additional logic is added for this type of unloading, however, to prevent a large spacecraft disturbance caused by the large jet thruster torque, and to approximately select the jets to avoid conflict.

3.1.4.2.1.2 Acquisition

The block diagram of the acquisition section of the ACS is shown in Figure 3.1-20. The acquisition approach was developed with the pessimistic assumption that the spacecraft had no initial knowledge of its attitude.

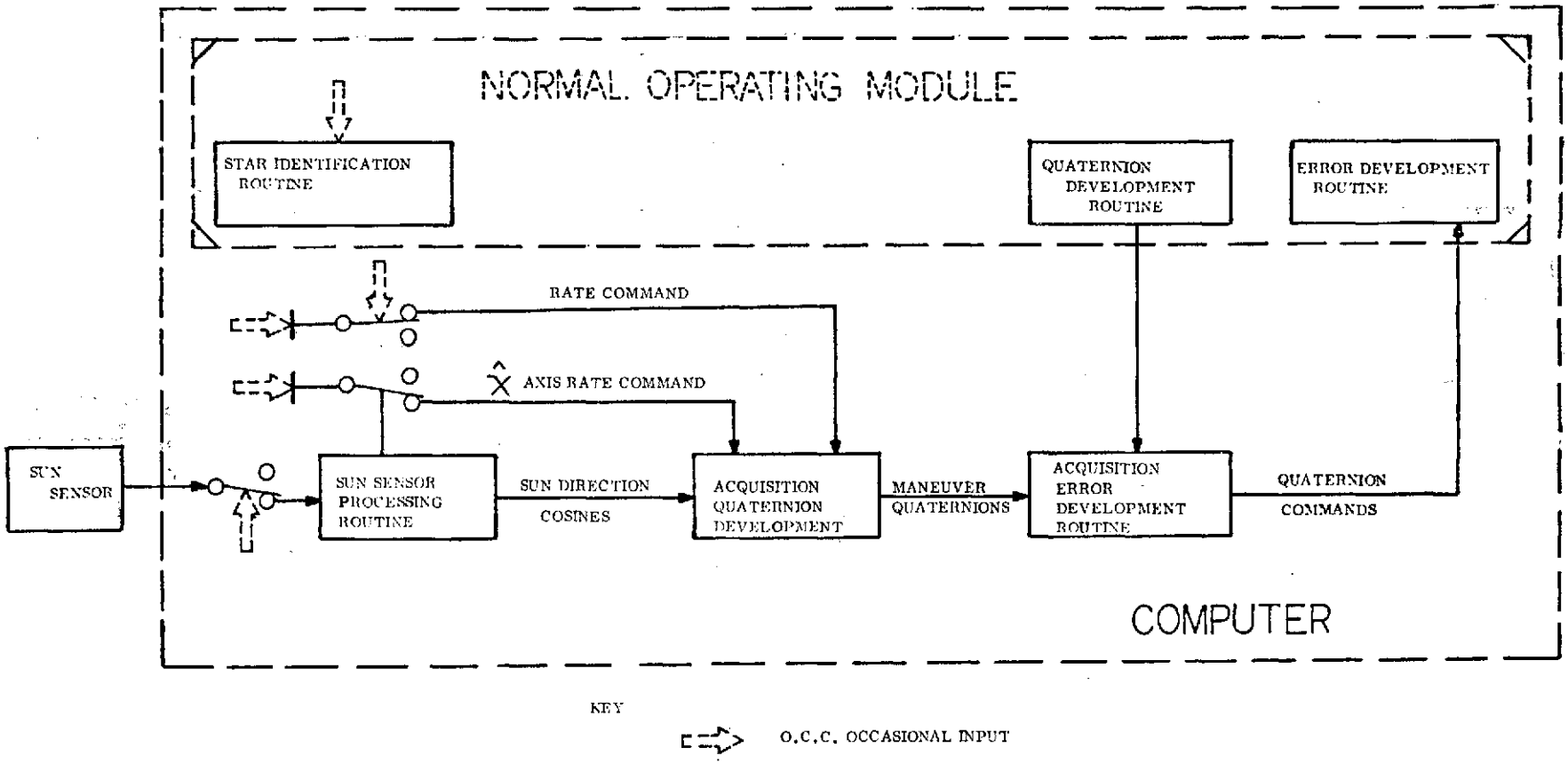

Figure 3.1-20. Attitude Control Subsystem Acquisition Module

The acquisition section of the ACS is comprised primarily of the normal ACS, with the addition of a sun sensor. All three heads of the sun sensor are used, each of which provides a 128 x 128 degree field of view.

At the start of acquisition, the spacecraft will null large rates and manuever itself to place the sun at null point of the sun sensor field of view. If the sun is initially within the field of view, the Sun Sensor Processing Routine calculates (in the spacecraft frame of reference) the direction cosines of the line of sight to the sun. These are output to the Acquisition Quaternion Development Routine which through a cross product, calculates the vector about which the spacecraft must rotate to point the center of the sun sensor to the sun, and the angle (approximate) through which it must rotate. The angle and the vector are converted to quaternions (Acquisition Quaternion Development Routine) and multiplied times the position quaternions (Acquisition Error Development Routine) to obtain the commanded quaternions. The commanded quaternions are then output to the Error Development Routine within the normal mode section. The spacecraft will then slew to the proper orientation, updating the commanded quaternions approximately every second. The update corrects for large angle approximations in the equations, and for irregularities in the manuever caused by the jets. The procedure has been developed to orient the $-\hat{z}$ axis to the sun, but the orientation about the sun line is unknown, and will drift since it is only rate limited. The $-\hat{z}$ axis was selected as the "sunline" axis since the star sensor is approximately 80 degrees from the $-\hat{z}$ axis, and will not encounter sun interference or earth interference (except near sunrise and sunset). Also, relinquishing control to the normal mode is easily accomplished around noon.

If the sun is not initially in the field of view, a one degree per second rotation about the $\hat{x}$ axis is initiated by the OCC. With the large field of view of the sun sensor, the entire celestial sphere will be covered in a 360° $\hat{x}$ axis rotation. When the sun is within the field of view, the rotation is terminated and the spacecraft manuevers as described above.

The second step in the procedure is to update the position quaternions, except for the rotation about the sun, and to rotate at a low rate (approximately .2 deg/sec) about the spacecraft $\hat{z}$ axis to execute a star search. The spacecraft will continue rotating until a bright star (such as Canopus), which has been identified, is transitted. With a star tracker, the identification will be made based upon magnitude, either directly, through the star sensor magnitude threshold, or indirectly through the star table identification. The identification of a second or third star will provide the spacecraft with sufficient data to estimate its attitude within a few arc minutes. After the spacecraft has established its attitude, the normal mode is commanded, allowing the spacecraft to slew its proper attitude, and start normal operations.

The acquisition procedure can be performed autonomously, rather than by OCC command, but OCC command appears preferable since the ground would be in continuous contact with the spacecraft and can monitor its performance. Once normal control has been established, the PRCS can be disabled, and the magnetic unloading initiated.

3.1.4.2.1.3 Orbit Adjust/Transfer Mode

Orbit Adjust

The ACS is capable of controlling the spacecraft during periods of orbit adjust while operating in the normal mode. The peak disturbance torque caused by the orbit adjust thruster is 1.9 lb-ft., however, which exceeds the momentum wheel torque (.14 lb-ft) and requires the PRCS to be enabled. The PRCS capability using the large five pound thrusters is 13.0 lb-ft and will be used for short orbit adjust manuevers. The use of these thrusters permits a low thruster duty cycle and avoids the necessity of phasing the firings to avoid conflicting use of the thrusters (i.e. the same thruster is required by two axis) such as exists with the low thrust jets.

The orbit adjust section operates the PRCS in a limit cycle mode of operation with a total deadband of six degrees ($\pm$ 3). To assist the PRCS in the event the disturbance torques are lower than anticipated, the momentum wheels will continue to be commanded normally throughout the orbit adjust. At the completion of the orbit adjust, the backup momentum unloading will be commanded until the attitudes and rates are close to normal, at which point the PRCS will be disabled.

Orbit Transfer

The orbit transfer mode is similar to the orbit adjust mode except that the period of thrusting is longer. In addition, to protect the gyros, the high rate (3°/sec) mode is utilized. Again the momentum wheels are commanded normally, with a gain change adjustment to correct for higher gyro gain.

3.1.4.2.1.4 Coarse Mode

The coarse mode is a backup mode commanded whenever a major ACS malfunction is detected by the ground. Since the malfunction may go undetected for several orbits, precautions are taken in the normal mode to prevent a malfunction which could cause a catastrophic condition. In particular, the PRCS is disabled to prevent spin-up or a high rate condition. With this precaution, the angular rate after a malfunction cannot exceed that caused by the momentum wheel spinning up or down; approximately .13 deg/sec

The block diagram of the coarse mode using the backup controller is shown in Figure 3.1-21. The backup controller utilizes the output of the sun sensor and the IRU to

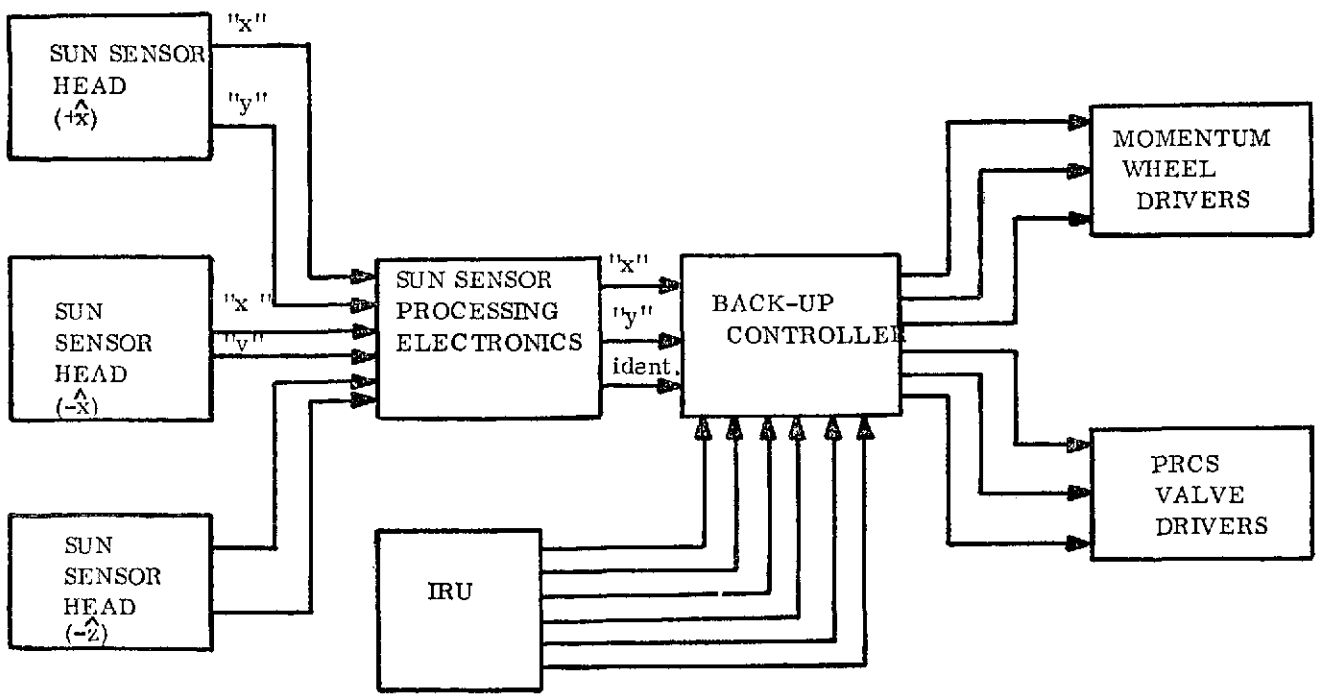

Figure 3.1-21. Back-up Attitude Control Subsystem

maintain stabilization and control. Therefore, the IRU must be operating properly prior to activation of the backup controller. The sun sensor and the PRCS (small thrusters) must be enabled however, since they are disabled for normal operation. When the coarse mode is activated, initial rates are reduced by the IRU down to approximately .01 deg/sec. If the sun is within the field of view of any of the three sun sensor heads at the start of the coarse mode, the backup controller will orient the spacecraft to the null position of that particular sensor head. Hence either the $+\hat{x}$, $-\hat{x}$, or $-\hat{z}$ side of the spacecraft will face the sun. This arrangement was chosen to avoid large angle slews, and because the analog output of the sun sensor is reasonably linear over a single sensor head field of view. The gain change required by the control loop as a result of different moments of inertia is corrected for by monitoring the identification bits from the sun sensor, and selecting the loop gain based upon the bits which are illuminated. If the sun is not within the sun sensor's field of view initially, the IRU will be commanded to execute a .2 deg/sec rotation about the $\hat{x}$ axis until the sun is detected.

During the sunlit portion of the orbit, the controller uses both attitude and rate information and operates in a limit cycle mode of operation with a 6° total deadband. During eclipse, the position reference is lost, and the backup controller rate limits (with an integrator) the spacecraft. Eclipse lasts approximately 2000 seconds and a drift rate of .0015 deg/sec (3°/2000 sec) was selected as a limit. This value is well within the capabilities of the PRCS and the IRU. The minimum angular impulse bits for the thrusters are .030 lb-ft-sec (or .006 lb-sec linear impulse), representing drift rates of approximately .0003 deg/sec. The IRU uncalibrated drift rates are approximately the same.

Since the spacecraft is inertially stabilized, the inertial disturbance torques, particularly gravity gradient, are large enough to significantly impact the drift rate, and in general dominate the limit cycle mode of operation. Although gravity gradient (and magnetics) have a sinusoidal characteristic, the PRCS cannot average the momentum over an orbit. In preserving the low angular rate, the PRCS would consume approximately 790 lb-sec/month with approximately 7,000 firings per engine. This consumption can be reduced to 87 lb-sec/month by including the momentum wheels within the control loop. The wheels,

using a tighter control loop than the PRCS, average the gravity gradient momentum over an orbit, and preserve the pointing accuracy during eclipse. The wheels are introduced by ground command. The controller is capable of operating for 30 days without the momentum wheels, however.

3.1.4.2.1.5 Specialized Modes

Inertial Hold

The inertial hold requirement of $.003^{\circ}$ deg/hour is achieved by commanding the spacecraft to remain fixed (through the Attitude Development Routine). The capability of meeting the requirement exists in the IRU, which currently has a drift rate of 0.0015 deg/hour after calibration. The capability prior to calibration, however, is closer to 0.5 deg/hour than to 0.03 deg/hour required by specification. The specified value can be met only with special ground calibration and processing prior to launch.

Slew Mode

The ACS is capable of slewing the spacecraft about any spacecraft axis at any rate up to .2 deg/sec in the normal mode and 3 deg/sec in the high rate mode. The maneuver can be commanded either by a rate command (Acquisition Quaternion Development Routine) or by a quaternion profile (Attitude Development Routine). The accuracy requirement of ± .03 degrees after a 90 degree slew requires an IRU scale factor accuracy of 333 parts/million (after bias calibration) which compares favorably with the 50 parts/million capability of the IRU, after calibration.

Stellar Payload Mode

The Stellar Payload Mode uses the acquisition mode software, but replaces the Sun Sensor Processing Routine with a Stellar Payload Processing Routine, and incorporates the Kalman Filter into the mode. The accuracy requirement can be met with a suitable payload sensor, but the jitter requirement can be met only with derived rate logic, or with a major change to the IRU and its data processing (Third Generation Gyros).

3.1.4.2.2 Physical Description

3.1.4.2.2.1 Module Description

The ACS module is the standard rectangular structure measuring 48 inches by 40 inches by 16 inches. The ACS components are mounted to a one inch thick aluminum honeycomb which comprises the upper surface of the module. The components are defined in Table 3.1-12, and their arrangement within the module is shown in Figure 3.1-22.

The star sensor is mounted close to the starboard side of the module with its centerline 65 degrees to the pitch (y) axis, and approximately 11 degrees up from the horizontal plane. The 65 degrees was determined from an analysis of the star crossings for the EOS-A spacecraft, but provides good performance for most other low altitude orbits. The 11 degrees elevation provides a 35 degrees angle between the star sensor line of sight and the horizon, representing a five degree margin.

Since the side of the ACS module containing the star sensor exit port is not illuminated by the sun, the sun shield normally associated with star sensors is not required. For missions which are not sun synchronous, a twelve inch external shield will be added to the module.

Table 3.1-12. ACS Components

COMPONENT	POWER (ea)	NO.	WEIGHT (ea)	ENVELOPE
MOMENTUM WHEEL	120 peak 3 avg.	3	12.2 lb	13 dia x 9 in.
STAR SENSOR UNIT	5	1	11 lb	5-1/4 x 6 x 12 in.
MAGNETIC TORQUERS	1	3	3.3 lb	1.7 dia x 15 in.
INERTIAL REFERENCE UNIT	47 max 22 avg.	1	12.0	13.5 x 7 x 3.5
SUN SENSOR	.5	1 assy	3.7	3.5 x 4.5 x 1.2 +3 of 3.2 x 3.2 x .8
DRIVE ELECTRONICS	5 avg	1	10	6 x 6 x 8
BACKUP CONTROLLER	5	1	5	6 x 6 x 4
HARNESS	-	1	-	
MUX/DECODER	1.2	1	1.5	40 in^3

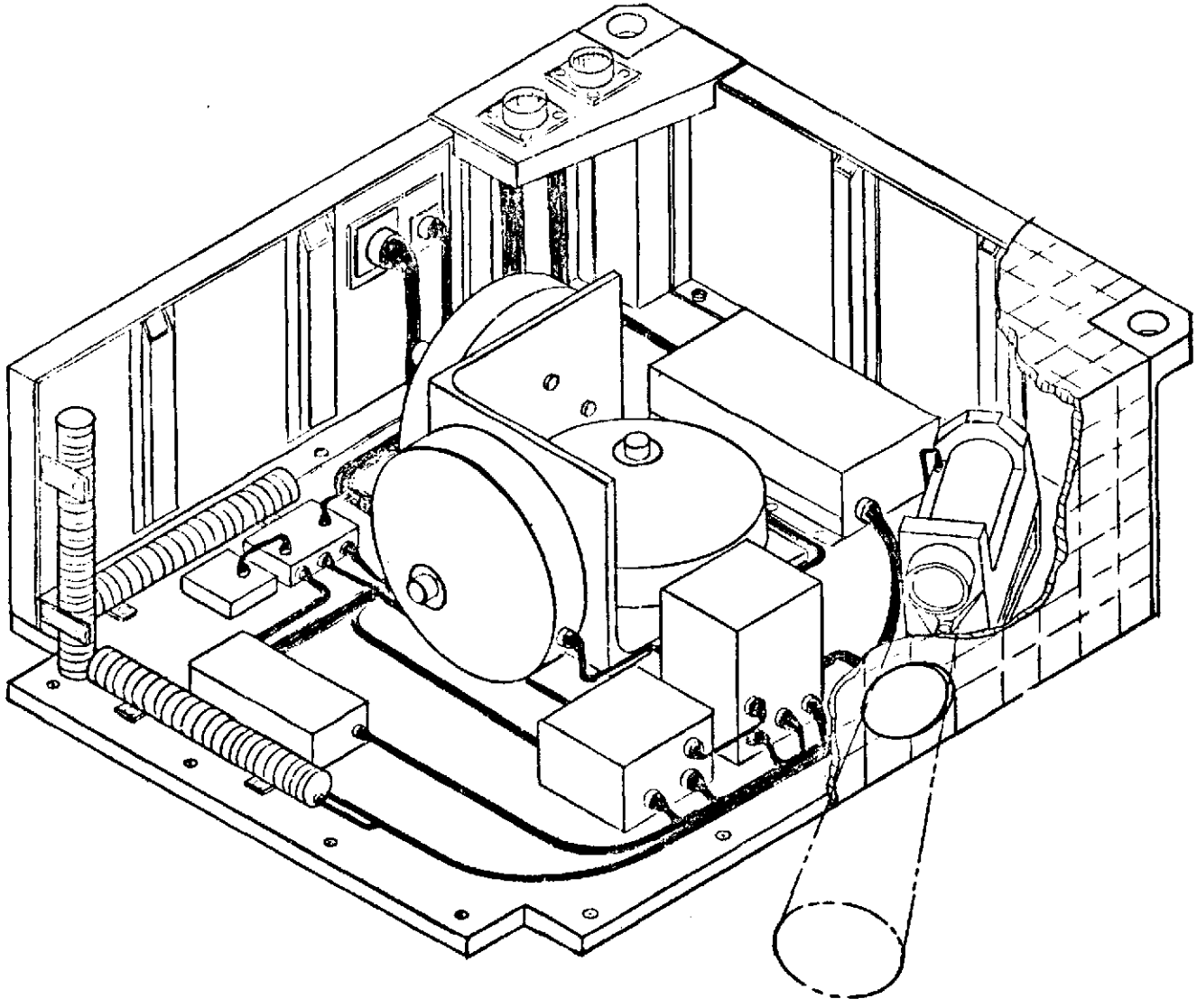

Figure 3.1-22a. ACS Subsystem Module

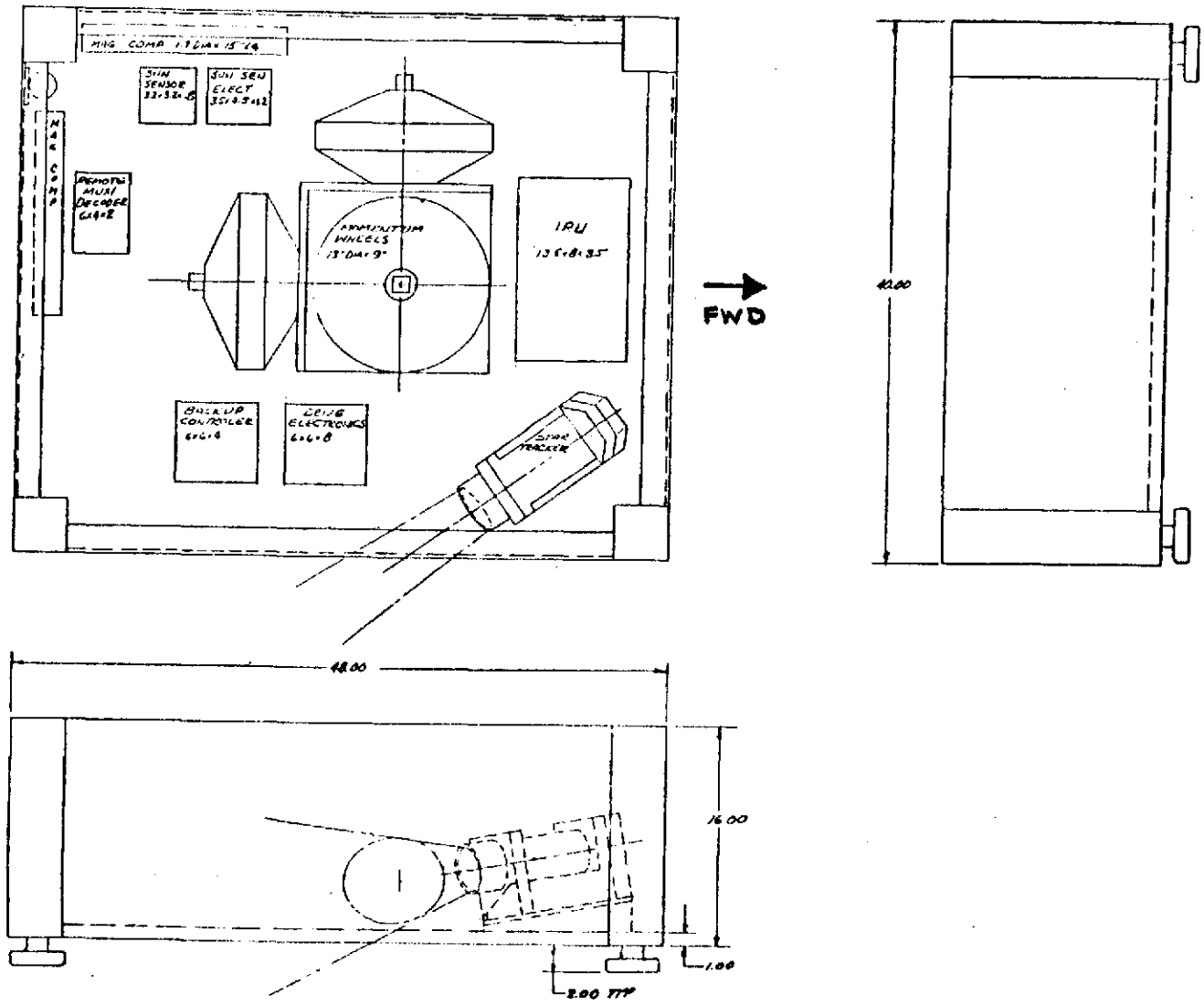

Figure 3.1-22b. ACS Module Layout

The star sensor is mounted close to the Inertial Reference Unit in order to preserve alignment. Static misalignments are automatically removed by the software Kalman Filter, but thermal alignment variations will reduce the ACS accuracy. With close packaging, thermal alignment variations are not expected to exceed 4 arc seconds.

The IRU is mounted close to the star sensor and with its axis nominally aligned to the attitude control axes. Close alignment between the IRU axis and the spacecraft axis is not required since ground data processing will remove fixed misalignments between those coordinate systems.

The momentum wheels are mounted in a cluster with their wheel axis nominally aligned to the ACS reference axis. Close alignment ($<$.1 degree) again is not required.

The magnetic torquers are mounted in the corner of the module, as far as possible from the star sensor and the IRU, since both of these components are susceptible to strong magnetic fields. The torquers are nominally aligned to the ACS reference axes.

The sun sensor has three sensor heads, only one of which is located within the ACS module. It is located on the upper surface of the module, with its line of sight perpendicular to the plate. The other heads are removed from the module in order to obtain clear fields of view along the positive and negative roll ($\hat{x}$) axis. The sun sensor processing electronics are mounted in the ACS module.

The star sensor, momentum wheels and sun sensor have preferred locations in the module. The remaining components are electrical components which have no preferred location. In order to minimize harness and noise, however, they are mounted as close as possible to the components they serve.

3.1.4.2.2.2 Component Description

3.1.4.2.2.2.1 Inertial Reference Unit

The Inertial Reference Unit (IRU) supplies short term attitude reference information to the computer in the form of three orthogonal position changes over fixed sample time intervals. The gyros are mounted orthogonally and are caged using a pulse rebalance (Δ position) technique. In this mode the data processing consists of storing the asynchronous rebalance pulse information within respective gyro channels until

simultaneous transmission of position data to the on board computer can be accomplished. Figure 3.1-23 shows a block diagram of a single IRU channel for developing rate and incremental position data. In the normal mode a computer pulse interrogates the accumulator following the up-down counter. When this occurs, the transfer of data from counter to accumulator is inhibited to prevent loss of position information. Accordingly, the up-down counter is sized to store incremental position data, in addition to up-down counting, inside the saw-tooth generators until the computer interrogate pulse releases the 16 bit accumulator.

The gyro caging loop contains two control current levels representing high and low rate sensing modes. The high rate level (3 deg/sec. maximum) is commanded by the computer during initial acquisition and orbit transfer modes. The low rate mode (.2 deg/sec. maximum) is used for normal on-orbit reference maintenance and provides a minimum position increment of .06 arc-sec. At both gain levels, the gyro caging loop dynamics approximate a second order lag at 3 Hz with 0.6 damping.

A secondary function of the IRU is to supply analog rate information to a back-up processor for purposes of controlling to the sun line in the event of a system malfunction. The conversion from digital to analog data is controlled by the gyro caging loop saw-tooth generator.

Physically, the baseline IRU design contains three, two axis non-floated gyros, requiring six of the caging and data processing circuits defined in Figure 3.1-23. The saw-tooth generator, clock and power conditioning functions are common to each channel. Gyros will be oriented such that position changes and analog rates will be detected redundantly about 3 orthogonal axes. Figure 3.1-24 describes data flow from the IRU to the computer and backup controller. To avoid data skewing, a single software interrogate transfers data from all six accumulators to buffer storage, such that incremental position data accumulated through the use of the IRU clock is removed to a register to be unloaded according to the computer/mux clock. Each channel will consist of 16 bits, making the buffer storage register 64 bits long. The word is serially transferred through the standard telemetry mux system in 8, eight-bit interrogate sequences and will

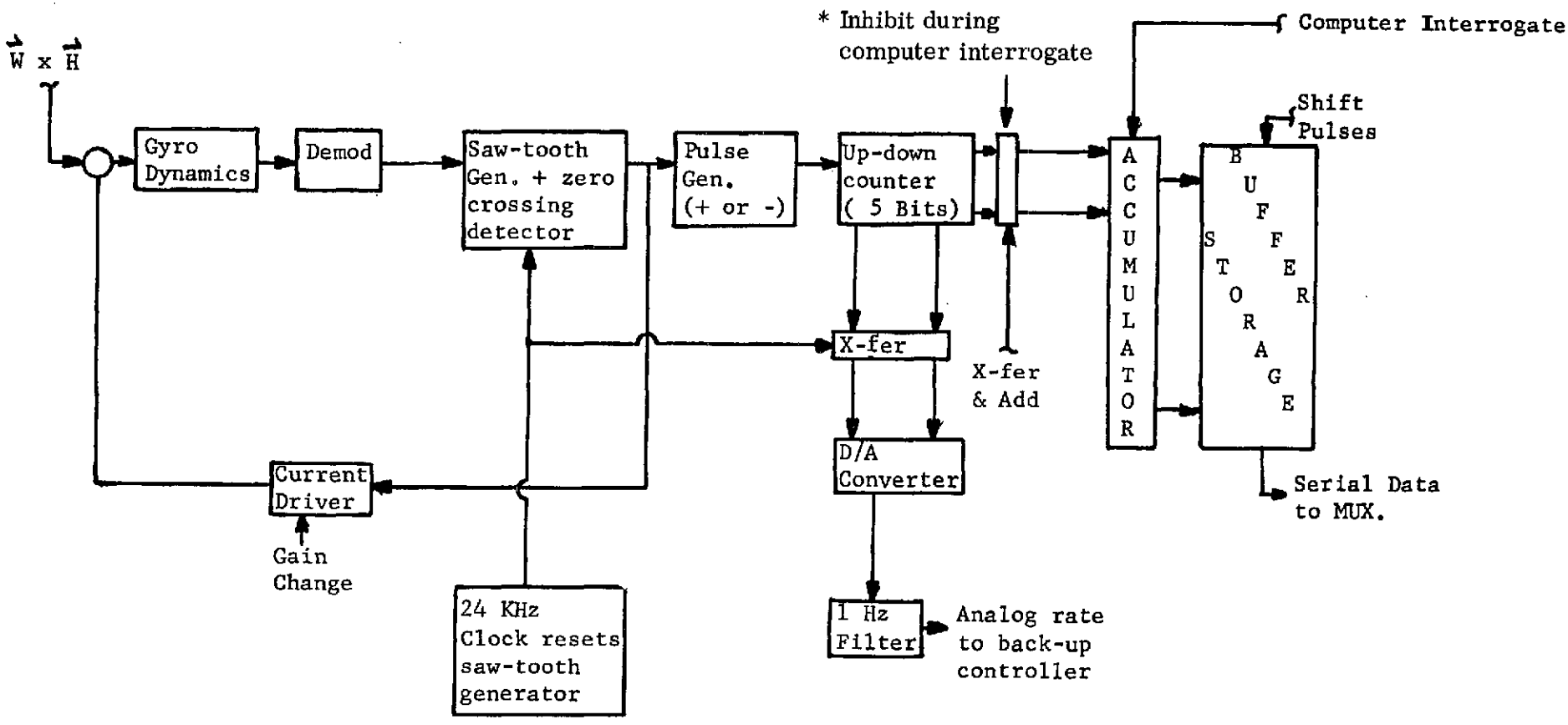

* Computer interrogate inhibit function is erased when back-up mode is commanded.

Figure 3.1-23. Single Axis IRU Channel

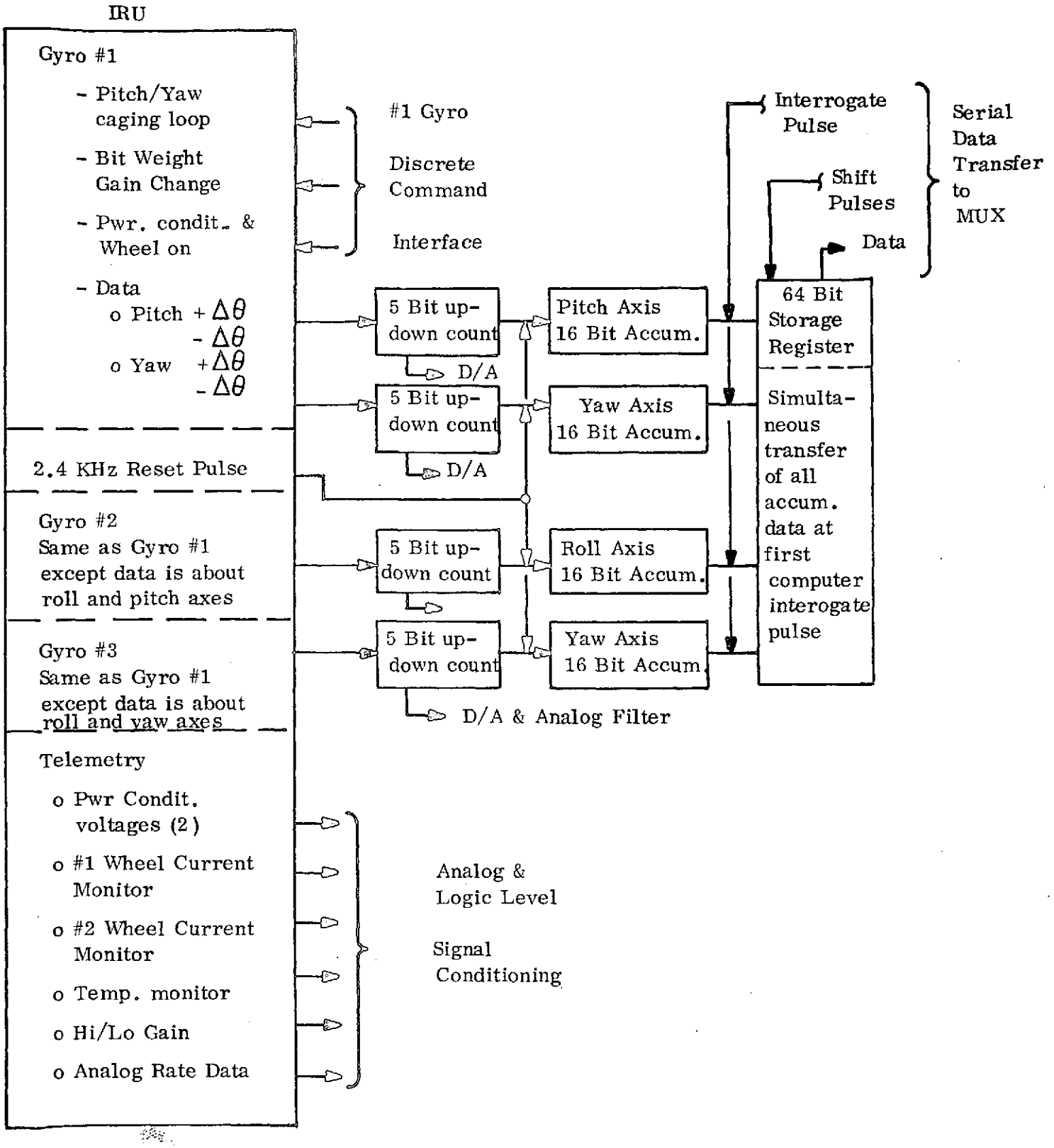

Figure 3.1-24. Inertial Reference Unit Functional Schematic

be processed as valid incremental position data at the time of the first channel interrogate pulse.

The 5 bit up-down counter is a short term measure of incremental position at the end of each gyro saw-tooth interval only, and, if reset every time the saw-tooth generator is recycled (417 micro-seconds) can be used to develop an analog rate signal for use in the backup controller. Therefore, to avoid not resetting this counter due to a computer interrogate pulse, the digital data flow is inhibited when the backup mode is commanded. A minimum bit which in low gain mode is equivalent to .06 arc-sec., is equivalent to approximately .04 degrees per second if transferred to the D/A every reset interval. Since backup mode rate resolution is expected to be below .001 deg/sec, there will be a number of gyro reset intervals when the transferred word will be zero, leading to a requirement for filtering the data presented to the backup controller. The maximum rate read from the counter is .3 degrees/ sec., well above the rate capabilities of the gyro in low gain mode and above the rate saturation level of the backup controller. Since this analog rate channel runs without the use of the primary computer/IRU interface, the telemetry data could prove useful in the failure isolation process.

Figure 3.1-24 identifies the command and telemetry interface for the IRU. Functionally, two of the three two-axis gyro wheels are activated and their caging loops closed from launch until end of life.

Should a single gyro wheel or caging loop electronics fail, protection of the remaining digital and analog data processing circuitry is provided to allow operation of the remaining gyro. Gain change commands at the gyro torquer driver provide for 3 deg/sec rate capability during acquisition and orbit maintenance modes (hi-gain) with a .2 deg/sec maximum in low gain or normal mode.

3.1.4.2.2.2.2 Star Tracker

The Star Tracker selected for the baseline ACS design is the Ball Brothers CT-401 Star Tracker. The characteristics of the tracker are described in the following sections.

The BBRC CT-401 Star Tracker is a strapped down scanning and tracking sensor using an image dissector tube as the sensing element. The tracker can search and acquire

stars from +6 magnitude to +2 magnitude within an 8-degree square field of view. The tracker is capable of operating with vehicle rates as high as one degree per second. Star position data is taken from anywhere in the tracker field of view, but optical and camera tube deflection system distortions represent significant errors when operating at the edges of the field of view. As a consequence, a calibration procedure is applied. The distortion errors, as well as errors resulting from temperature, magnetic and other effects are measured in the tracker manufacturing process. These measurements are converted to corrections which are applied to the output signals of the tracker. The overall RMS errors with this approach are approximately 10 arc seconds. Currently, the calibration procedure consists of an 8th order two dimensional interpolation around 81 points of position data obtained by manufacturing calibration. As mentioned earlier, the major distortion occurs at the outer edge of the field of view, and by reducing the operating range to 40 square degrees, the size and order of the interpolation scheme can be reduced. The accuracy can also be improved (3-4 arc seconds) with this reduction. Additional simplifications are realized with tight ($\pm$ 5 degrees) temperature control.

Operationally, the tracker searches and acquires stars within its 8 degree square field of view, by magnetic deflection controls. Commandable thresholds determine the minimum signal to be acquired and tracked, and the sensor will search until a video pulse exceeding the commanded threshold level is obtained. When this occurs, the track mode is engaged and the track pattern begins scanning over the star location found in the search mode. The track pattern is generated by gating the ascending ramp of a triangle waveform to the X axis and the descending ramp to the Y axis. As the instantaneous aperture is scanned over the star image, a signal pulse (video pulse) is obtained from the tube. Tube deflection is sampled when the leading edge of the video pulse exceeds a half-amplitude threshold and when the trailing edge of the pulse falls below the threshold. The average of the two samples of deflection signal is the centroid of the pulse and, therefore, the position of the star image in the field of view. This sampled star position is fed back to the deflection amplifier as the DC bias for the track pattern signal and effectively centers the pattern on the star image. The sampled

star position is filtered and provided at the tracker output as an analog signal representing star position in the field of view. If the star moves in the field of view in response to vehicle attitude changes, the track pattern follows and remains centered on the star image.

The star is tracked until it leaves the 8 by 8 degree field of view, or until an "initiate search" control is received from the ACS. At this point the search mode resumes. When returning to the search mode, the Y coordinate for the beginning of the new search line will be the Y coordinate of the last tracked star, plus a small increment to avoid tracking the same star again. The search begins on a new line on the X axis. Whenever search is restarted, the video sampling circuits are reset to allow acquisition of any star brighter than the commanded threshold level.

The image dissector used is the ITT 4012 RP Tube. It is a one-inch tube with S-20 cathode response and magnetic focus and deflection coils manufactured by Ball Brothers Research Corporation.

The lens design used in the tracker is the 76 mm F 0.87 Super-Farron by Farrand. The lens elements are mounted in a Titanium housing of BBRC design.

The tracker mechanical design provides accurate maintenance of the alignment between the ID tube and the lens, between the tube and the focus field, magnetic shielding of the ID tube, and low weight. The ID tube along with focus and deflection coils is suspended inside a fabricated magnetic shield which is both shield and structure. This assembly is accurately referenced to the lens assembly and to the mounting feet. The electronics boards are suspended beneath the tube assembly with the high voltage supply is to the rear. An outline drawing is shown in Figure 3.1-25.

A bright object sensor mounted separately from the tracker, provides a signal to close the shutter in the event that the sun, moon, earth limb, or other object, bright enough to endanger the phototube approaches the field of view.

The analog output of the star sensor is converted to digital format by buffer electronics.

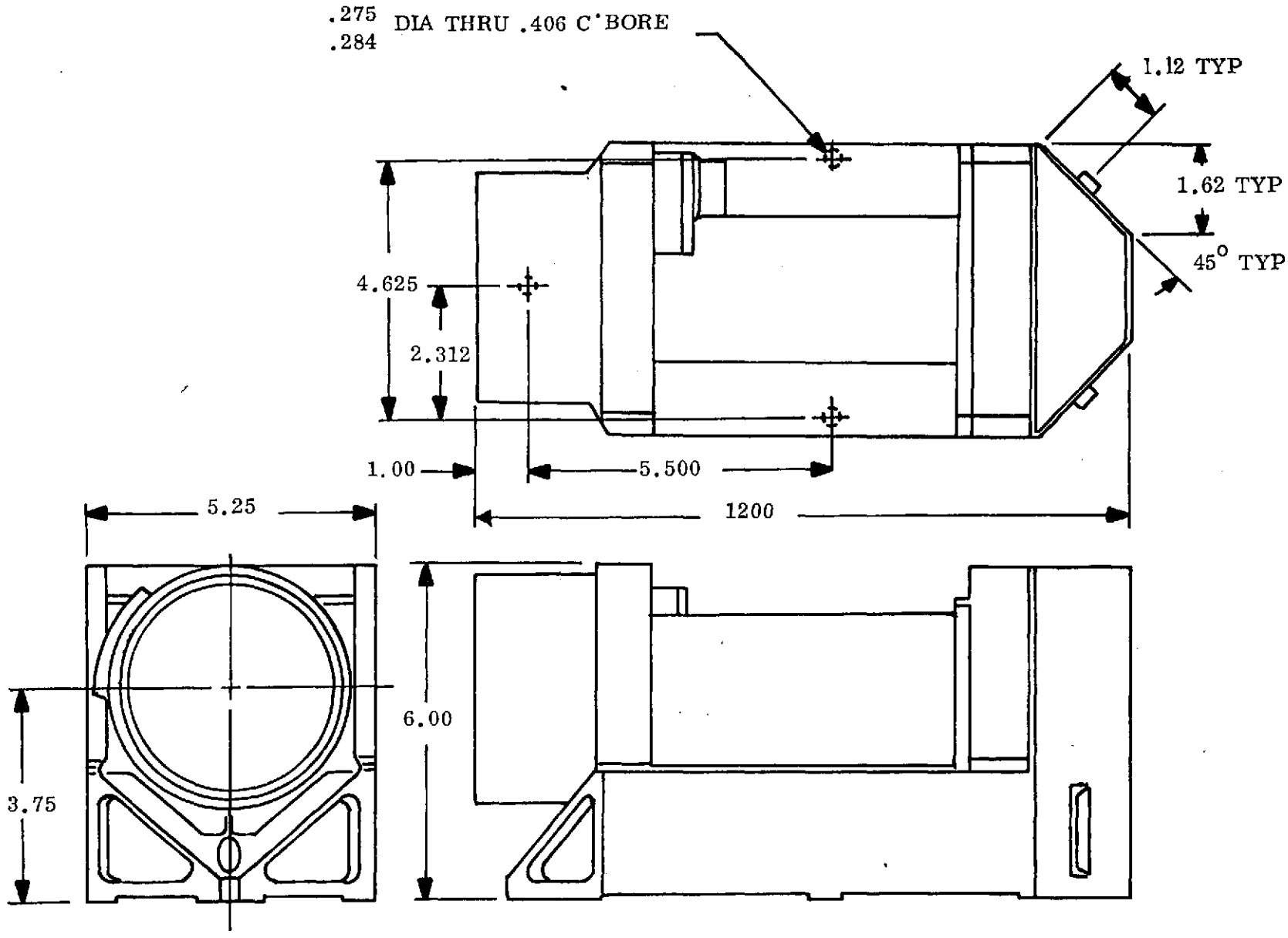

Figure 3.1-25. CT-401 Tracker

3.1.4.2.2.2.3 Sun Sensor

The Sun Sensor selected for the baseline ACS design is the Adcole Solar Aspect Model 16763 with associated electronics. Solar Aspect Sensors are flight proven, and have been flown on TIROS, OGO, Nimbus, OAO, ATS and many other spacecraft.

The Solar Aspect Sensor consists of three digital gray coded sensor heads, and one electronics unit. Each sensor head has a $128^{\circ} \times 128^{\circ}$ field of view, with a sun angle resolution capability of 0.5 degrees. Each head has an accuracy of $\pm$ .25 degree at the transition points (measured in the plane perpendicular to the entrance slit) when the sun is within 64 degrees of the center of field of view. Figure 3.1-26 shows the definition of the coordinate system and angles with respect to one of the sensor heads. The output of the sensor head is two eight bit gray code digital words which are produced when the sunlight passes through reticles A and B. These words are converted to binary words within the electronic processing unit and output in analog format. The analog outputs are converted to decimal words (x & y) within the computer and are used to calculate the approximate sun angles α and β shown in Figure 3.1-26.

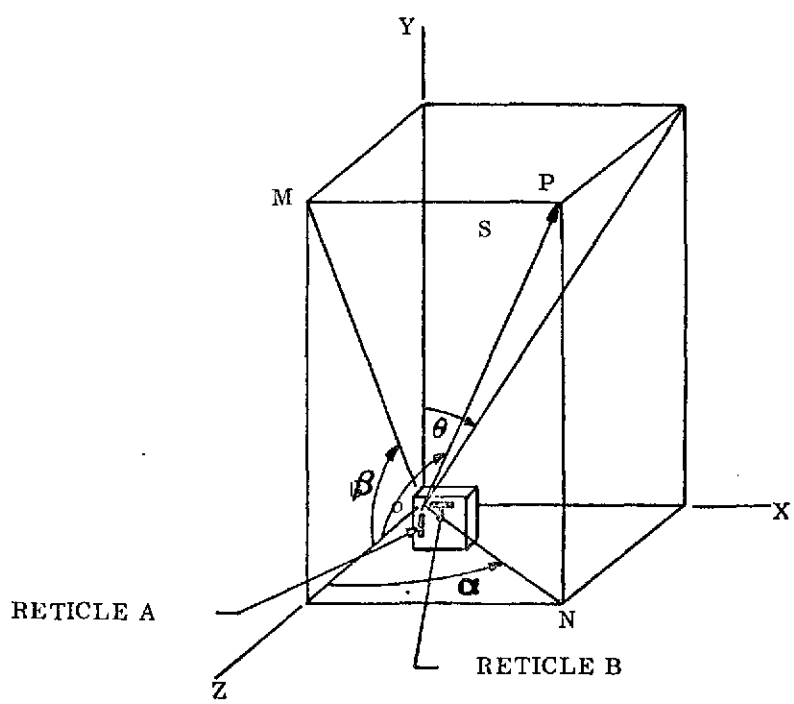

Figure 3.1-26. Coordinate Reference System

The analog output was selected in order to operate the backup controller and avoid double outputs (digital and analog). This output is used directly with no geometric correction. The deviation between the analog output (α) and the geometric angle it represents is small as shown in Figure 3.1-27. The relationship is nearly linear, but with a slope dependent upon the angle. Below approximately 30 degrees, the error is less than ten percent of reading for all positions.

Operationally, a solar cell assembly consists of nine P on N solar cells mounted side by side in a rectangular ceramic base. A reticle consists of a rectangular quartz block coated optically black except for a slit area on one side and a gray-coded pattern on the other side.

When light is incident on the face of a detector unit, it passes through the windows and cover glasses in the housing and is then incident on the slit side of the reticles. Only the illumination in the slit passes through the fused silica block to the gray-coded reticle pattern, and only the illumination which is passed by the reticle side of the block is incident on the solar cells. The slit, reticle, solar cell interface produces two parallel eight-bit gray-coded outputs of information which are processed by the electronics.

Physically the three detector heads of the solar aspect sensor measure 3.175" x 3.175" x 0.8" and weigh approximately 0.6 lbs. The electronics unit measures 3.5" x 4.5" x 1.2" and weighs 0.65 lb. The detector heads are typically mounted remote from the electronics.

3.1.4.2.2.2.4 Momentum Wheels

The momentum wheel selected for the ACS is the Model 15MWA reaction wheel built by the Sperry Flight Systems and is being flight qualified on Fleet Sat. Com. These momentum wheels have been selected after an evaluation of all the requirements for the multiple missions. The wheels meet these requirements with reasonable power and weight. Smaller or larger wheels can also be utilized if required for future missions since the wheel drivers are compatible with any AC momentum wheel of power less than 120 watts.

The Sperry momentum wheel is an AC powered reaction wheel of the "constant torque" type (i.e. torque largely independent of wheel speed). The momentum wheel provides a

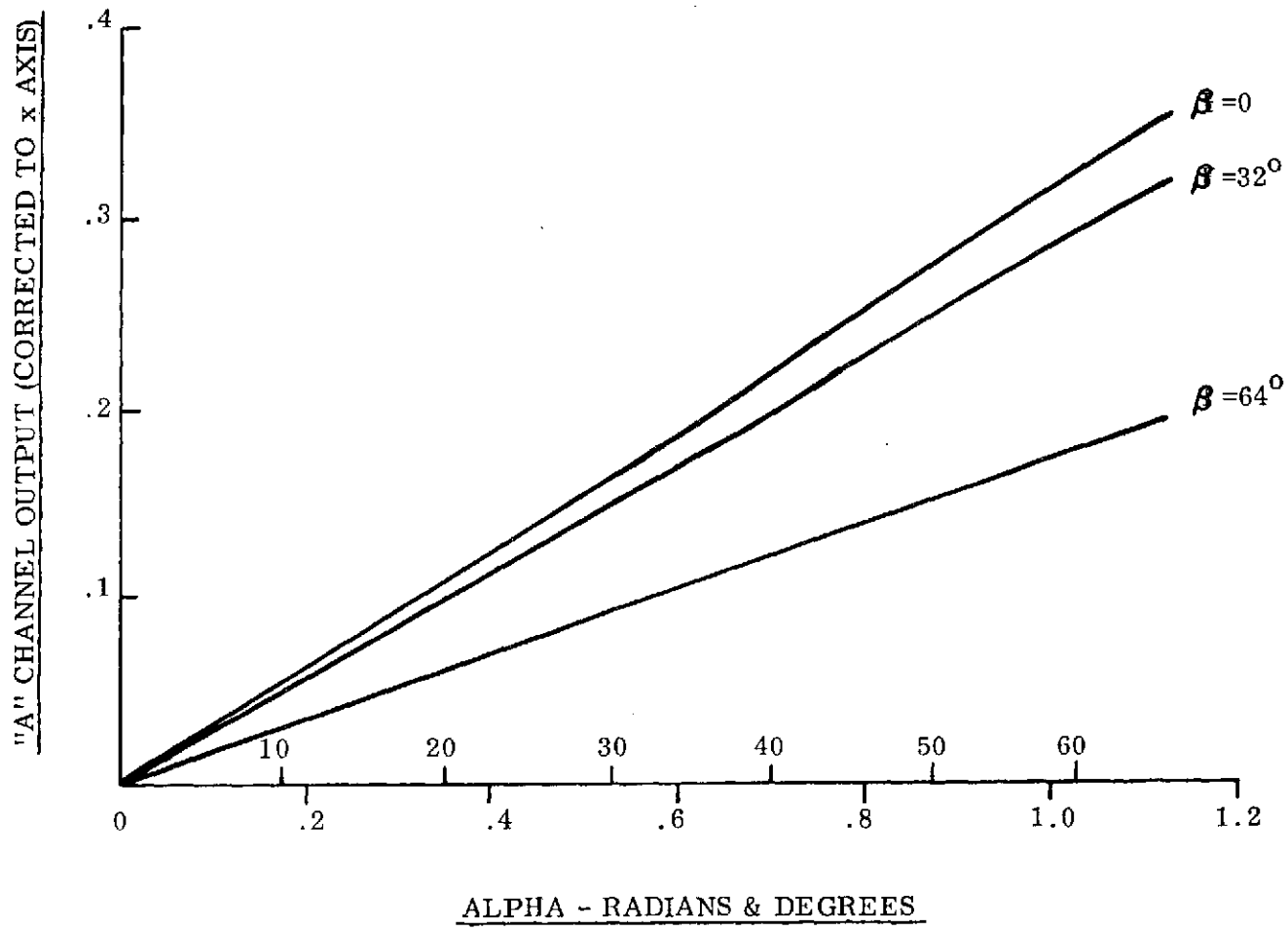

Figure 3.1-27. Output/Sun Angle for Solar Aspect Sensor

momentum storage capability of 7 lb. ft. sec. at a speed of 3100 rpm. The reaction torque capability is approximately 23 oz.-in. with a power input of 120 watts. The nominal power at 3100 rpm is 7 watts and the orbital average power is 3 watts. A tachometer in the momentum wheel provides one or more pulses per revolution as required.

A cutaway drawing of the momentum wheel is shown in Figure 3.1-28. The rotor and web are machined from a single piece of Titanium and are thermally fitted to a steel shaft. The spin motor is attached directly to the rotor web structure. The rotor is suspended in two pre-loaded duplex DF pairs of bearings. The bearings are packed in grease and replenished from oil-impregnated nylasint reservoirs. Labyrinth seals retard lubricant loss. The bearing consists of two sections of high-strength aluminum alloy, bolted together at a flanged joint and sealed with an O-ring. Perpendicularity between mounting surfaces and the spin axis is maintained to within 0.01 degree.

3.1.4.2.2.2.5 Magnetic Torquers

Magnetic torquers are long slender bars of ferromagnetic material wound with copper wire. Proper selection of high permeability/high saturation flux material provides a magnetic dipole which is a linear function of the current within the wire. No existing component with capability of 30,000 pole-cm/axis was found, and no vendor selected. Estimates of the size, weight, and power of the torquer were obtained from data on existing components.

3.1.4.2.2.2.6 Back-Up Controller

The Back-Up Controller maintains the stability of the spacecraft in the event the OBC malfunctions. The Controller orients the spacecraft to the sun line from large angular offsets using jets and the IRU, and maintains sun lock after acquisition using wheels if operable, with jet unloading. Position control during sun occultation will be through accumulation of gyro rate information. A functional block diagram is shown in Figure 3.1-29.

When back-up control is enabled, wheel and jet driver control via the command decoder will be inhibited in the electronics; pnuematics will be enabled; and the IRU will be switched to the high rate mode. Since all six IRU rate channels are available to the controller, the OCC selects which input channels are to be used. Any of the three

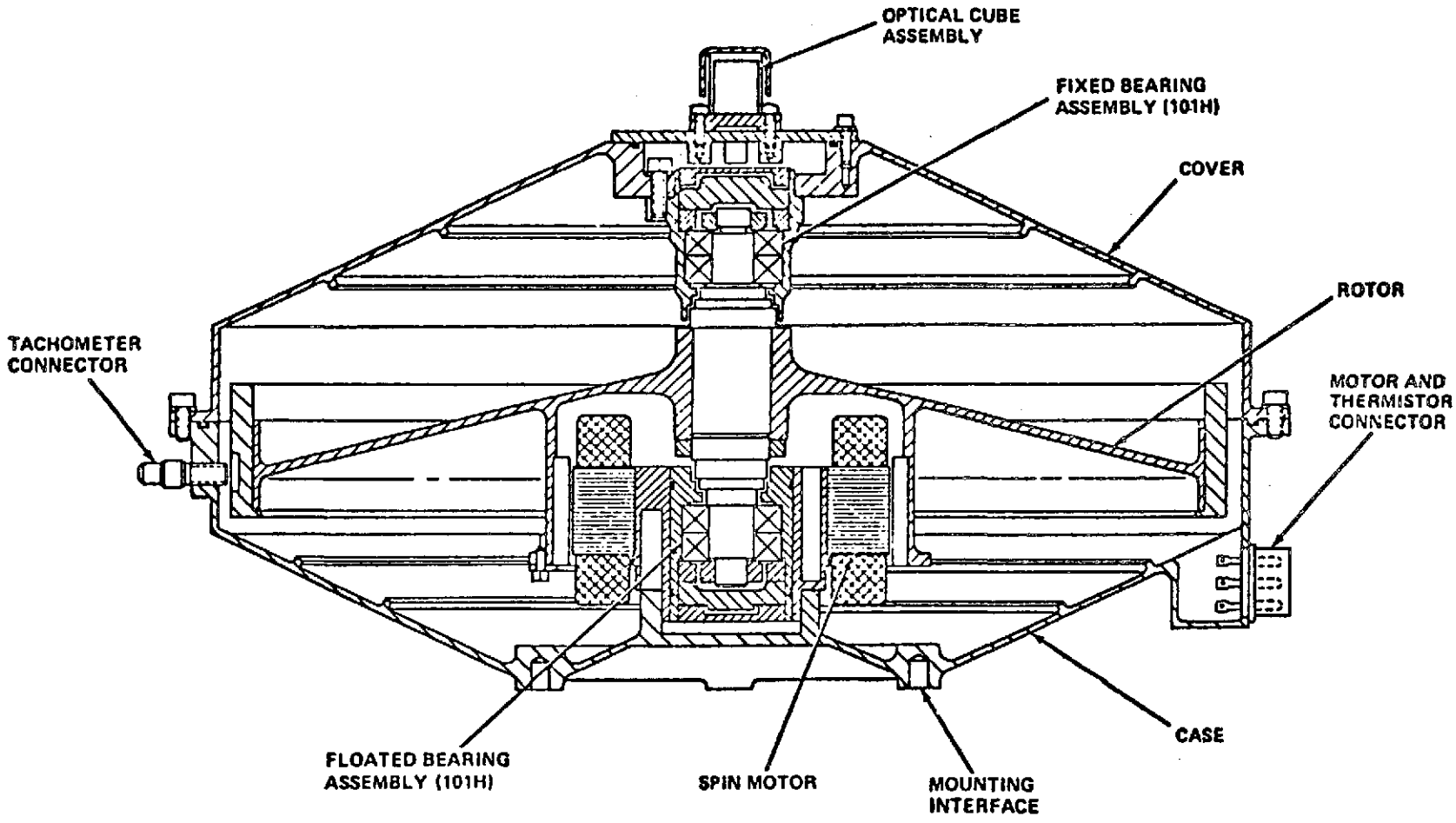

Figure 3.1-28. Momentum Wheel Configuration

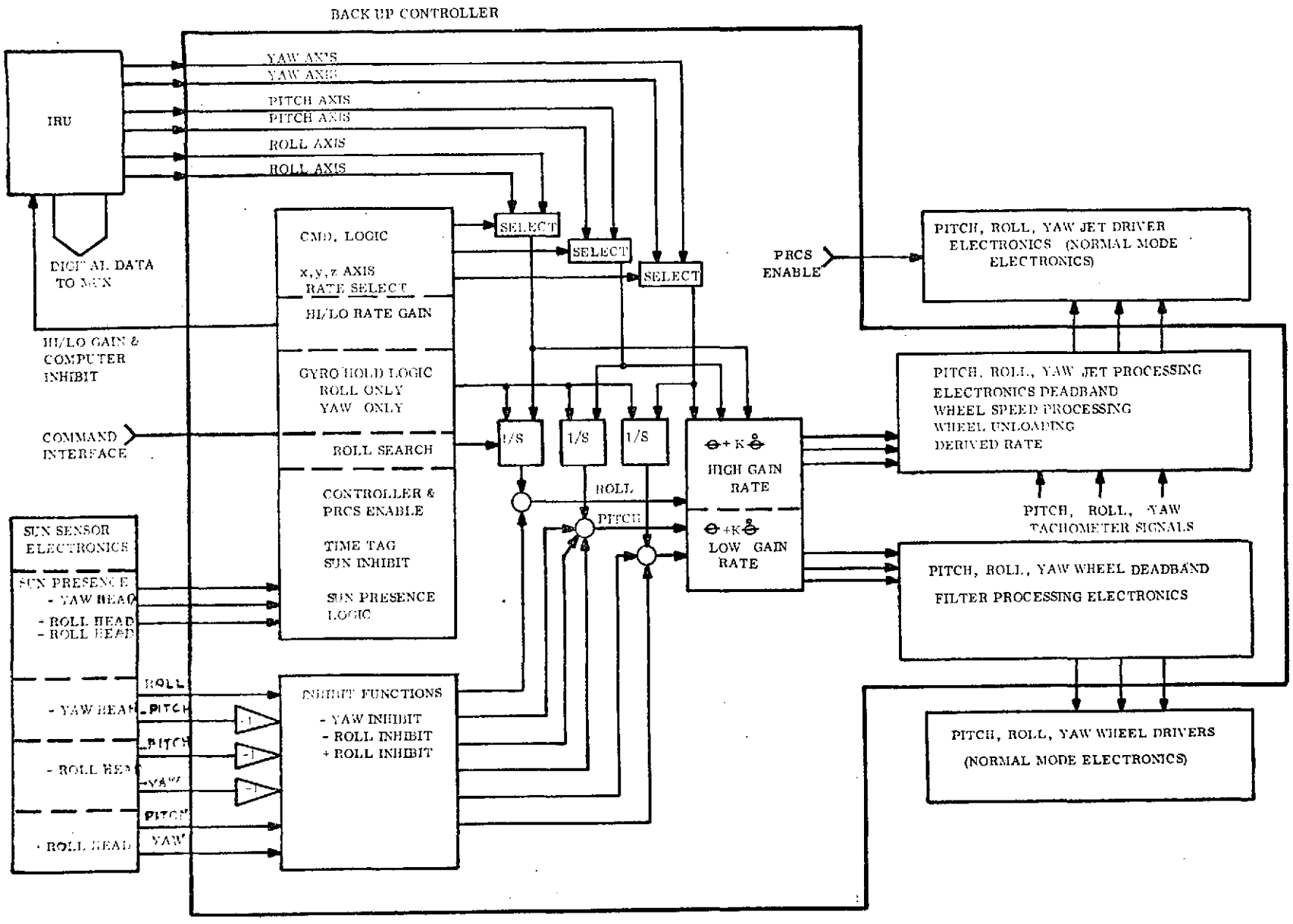

Figure 3.1-29. Back-up Controller Functional Schematic

sensor heads will orient the spacecraft to the sun by supplying a position reference for pitch/roll (y/x) control, or pitch yaw (y/z) control. Logic levels within the sun sensor electronics select the strongest signal and outputs the signal to the back-up controller. Sun sensor data is essentially linear over $\pm$ 20 degrees in two axes, and will be limited in the sensor electronics at a voltage equivalent to 20 degrees. This positive/negative level will be held for offset angles from 20 to 64 degrees to indicate the direction toward null. The acquisition control law for a single axis is shown in Figure 3.1-30 with rate to position gain set at 30 to 1. Sun acquisition (or near acquisition) from a worst case attitude orientation could take 2.5 minutes and use as much as 40 ft. #-sec. (assuming a 2000 sl-ft^2 vehicle inertia).

The control laws are designed such that the position input can be either from sun sensor channels or the gyro integrator, allowing arbitrary selection of the vehicle axis to be rate limited about the sun line. Since there is no difference in the control law, the only additional source of error is due to differences in the sensor characteristics, which is a rate drift on the order of 0.5 deg/hr. The third axis will, therefore, be rate controlled to approximately 0.5 deg/hr.

In the event that no sensor detects sun presence and the vehicle is on the daylight side of earth, a roll search rate of 0.6 degrees/sec is initiated by ground command until the sun is encountered. The roll search mode is initiated by introducing a fixed voltage at the input of the roll rate integrator equivalent to 0.6 deg/sec. This bias level will cause the spacecraft rates to increase until the rate gyro output is equal and opposite to the command voltage level. A similar approach to rate commanding in gyro hold is used on the Mariner class vehicles. The bias level is removed when sun presence signal becomes available and normal acquisition to the sun line will occur automatically. Note that during roll search, the other two axes are position limited by the gyro integrators since all three integrators were initialized at the beginning of the roll search sequence.

If the backup controller is activated on the dark side of earth, a gyro hold command is used to supply pseudo position data to the controller until the sun re-appears. Rates

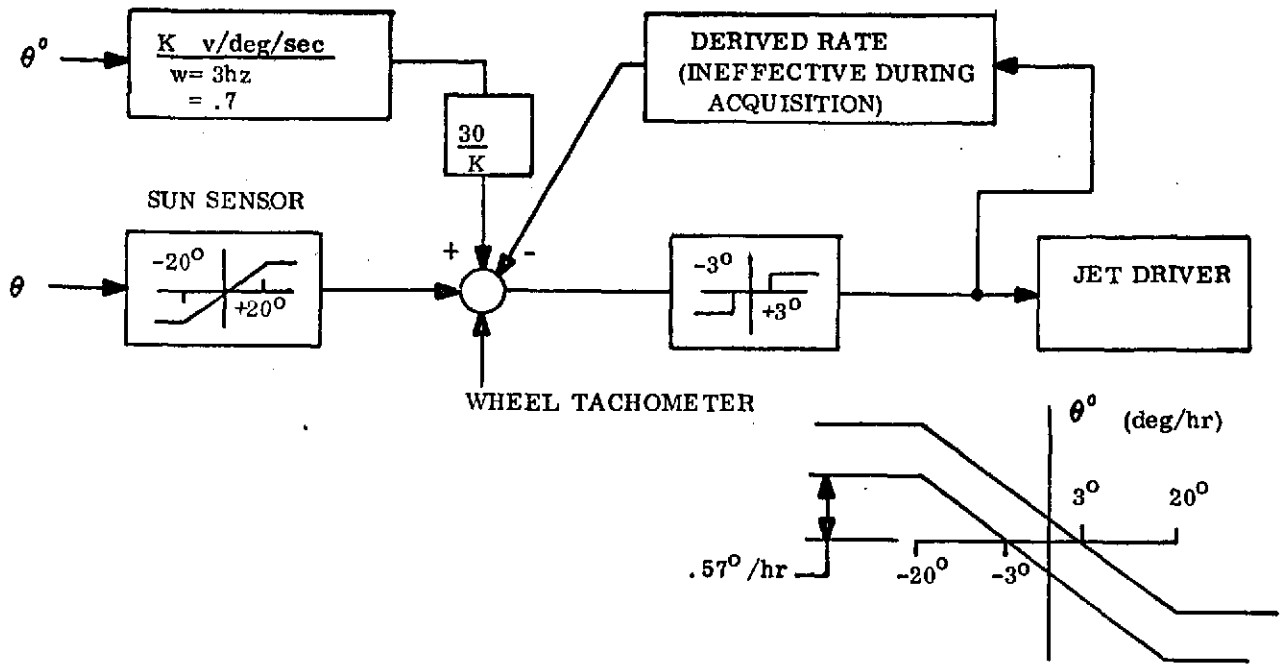

Figure 3.1-30. Single Axis Acquisition Control

will be controlled during this time and sun acquisition can be initiated as soon as the spacecraft comes out of eclipse.

When eclipse is entered normally, logic operating on the loss of sun presence will set the sun sensor input data to zero and unlatch the electronic integrators used to convert analog rate from the gyros to position data. Spacecraft control in this mode will continue until the spacecraft comes out of eclipse and sun presence returns again. Since the integrators are set to zero at the beginning of each gyro hold sequence, position errors will accumulate from the attitude offset existing at that time or .6 deg. plus 1 deg/hr. times the eclipse time. The eclipse period will be completed with position drift less than the jet threshold deadbands, and re-acquisition of the sun will be accomplished on wheels (if operating).

If the wheels are operational, a second control law using the wheels can be enabled. This law is designed to capture and hold position error within the $\pm$ 3 deg. jet deadband set. This reaction wheel control loop is shown in Figure 3.1-31 with a programmed attitude deadband set at $\pm$ 0.5 deg. Note in Figure 3.1-31 that a true representation of

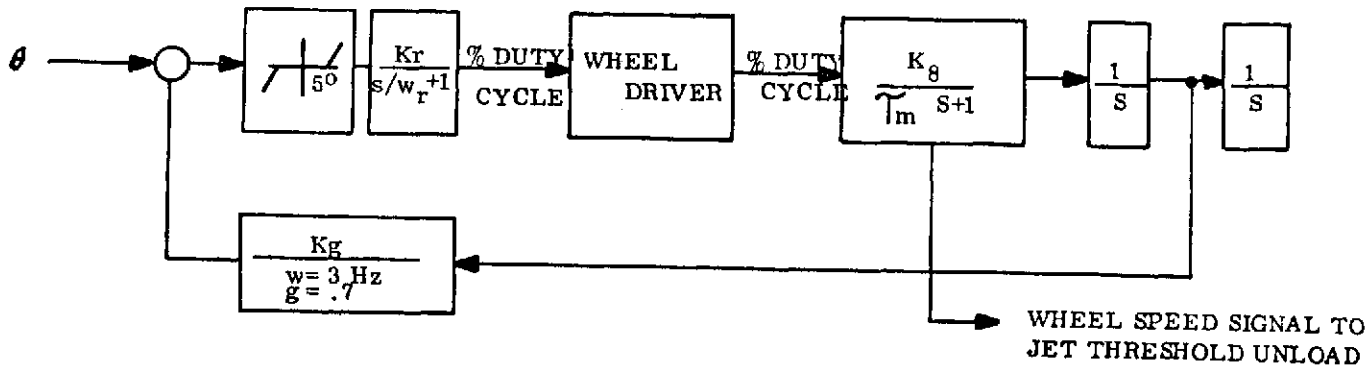

Figure 3.1-31. Single Axis Reaction Wheel Control

the reaction wheel shows that a constant (DC) input command produces no output. This is due to the demand for a fixed input to offset internal losses resulting from wheel speed. This fixed wheel input requirement is no worse than 15% of maximum torque and is used to set the filter gain "K_R", i.e., set K_R such that a $\theta_e = 0.1$ deg. is equivalent to 15% duty cycle and position offset due to controller deadband and wheel loading will not exceed 0.6 deg. which is well within the jet threshold detector deadband of 3 deg. Setting K_R to this value also guarantees a 100% wheel duty cycle command for zero rate error and a position error in excess of $\pm$ 1.3 degrees, which is within the 3 degree threshold deadband. The total wheel deadband is:

Deadband	.5 deg.
Wheel Offset	.1 deg.
Dynamic Offset	.7 deg.

This leaves 4.7 degrees of jet threshold deadband left for the wheel to capture or absorb vehicle residual momentum during the acquisition sequence. Expected vehicle momentum is on the order of 1.5 ft.-lb-sec. due to delay in response to vehicle rates because of

the gyro bandpass. Assuming a 20 in-oz wheel and 2000 sl-ft^2 vehicle inertia, the angle traveled during capture is:

$$\text{Vehicle Deceleration} = \frac{-20}{192 * 2000} = 52.1 \ \frac{\mu \text{ rad}}{\text{sec.}^2}$$

$$\text{Initial Rate} = \frac{1.5}{2000} = 750 \ \mu \text{ d/sec}$$

$$\text{Displacement} = \frac{(\text{Initial Rate})^2}{2 * \text{Accel.}} = 5.4 \text{ m rad}$$

Displacement = .3 degrees during wheel capture

Rate loop gain K_g can now be set to provide critical damping based on the largest expected vehicle inertia axis. Once set for this axis, rate gain for the remaining axes are set to provide the same rate loop bandpass. The value of W_R is set three times higher than the rate loop bandpass and filters analog gyro noise.

3.1.4.2.2.2.7 Electronics

The drive electronics processes data from the on-board processor to control reaction wheels, magnetic torquers and reaction control jets as part of the normal operating functions of the attitude control sub-system. In addition, analog wheel and jet signals will be supplied from the back-up controller in the event that a processor malfunction forces use of the back-up control mode. Signal data processing within the electronics includes conversion of reaction wheel tachometer pulses to analog votages proportional to wheel speed and the buffer stages necessary to convert actuator drive signals into useful telemetry data.

Figure 3.1-32 describes the reaction wheel drive electronics, with a digital to analog converter designed to accept two eight bit data words. The ladders convert the eleven most significant bits of each word into an analog signal representing percent of maximum wheel torque per axis. To reduce power consumption within the driver stages, a simple pulse width modulated circuit is applied using a saw-tooth generator similar to the pulse rebalance gyro caging-loop. Each threshold detector output gates the control phase of its respective reaction wheel signal, presenting wheel torques to the vehicle that are proportional to the input digital word.

C - 2

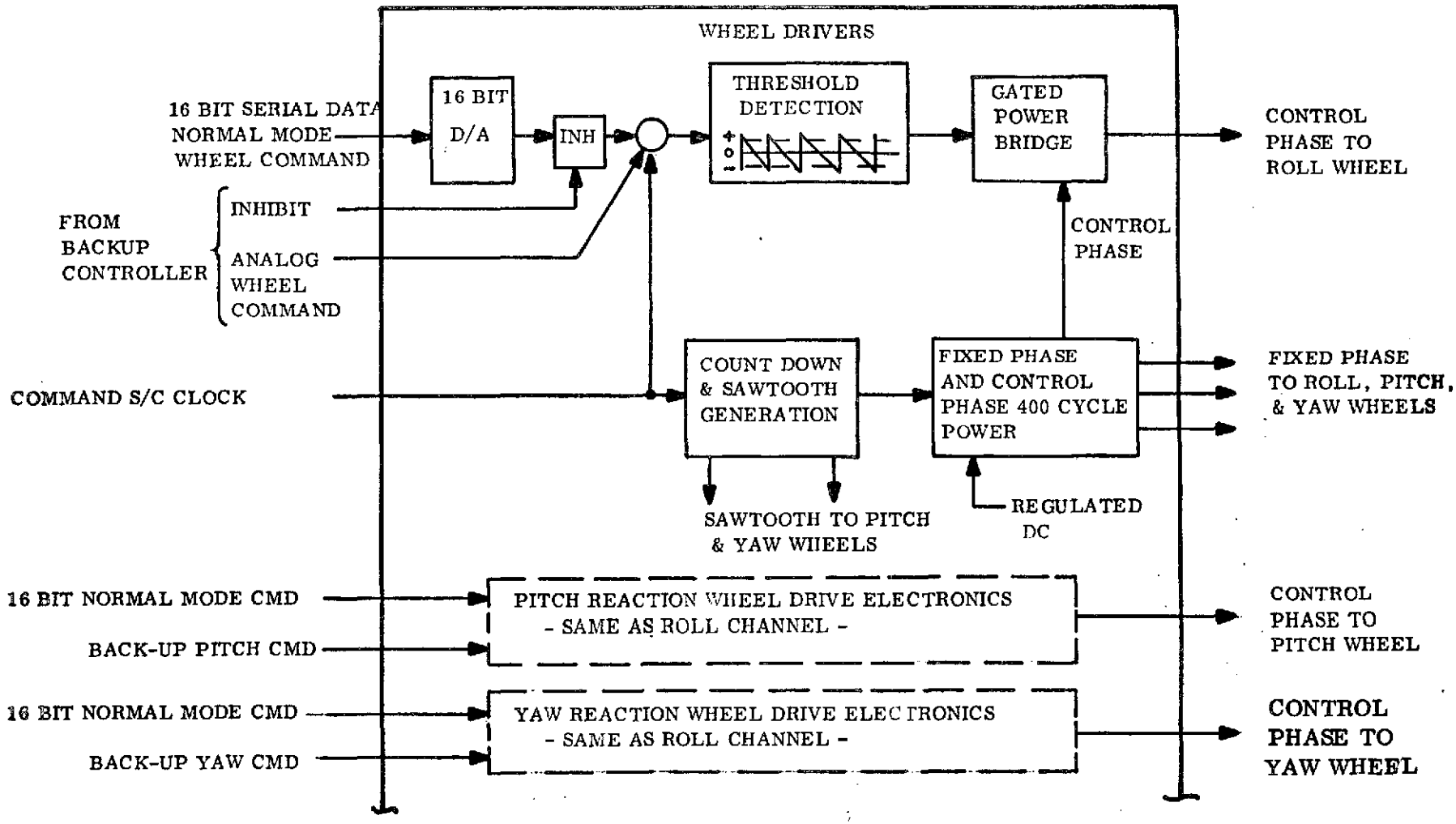

Figure 3.1-32. Electronics

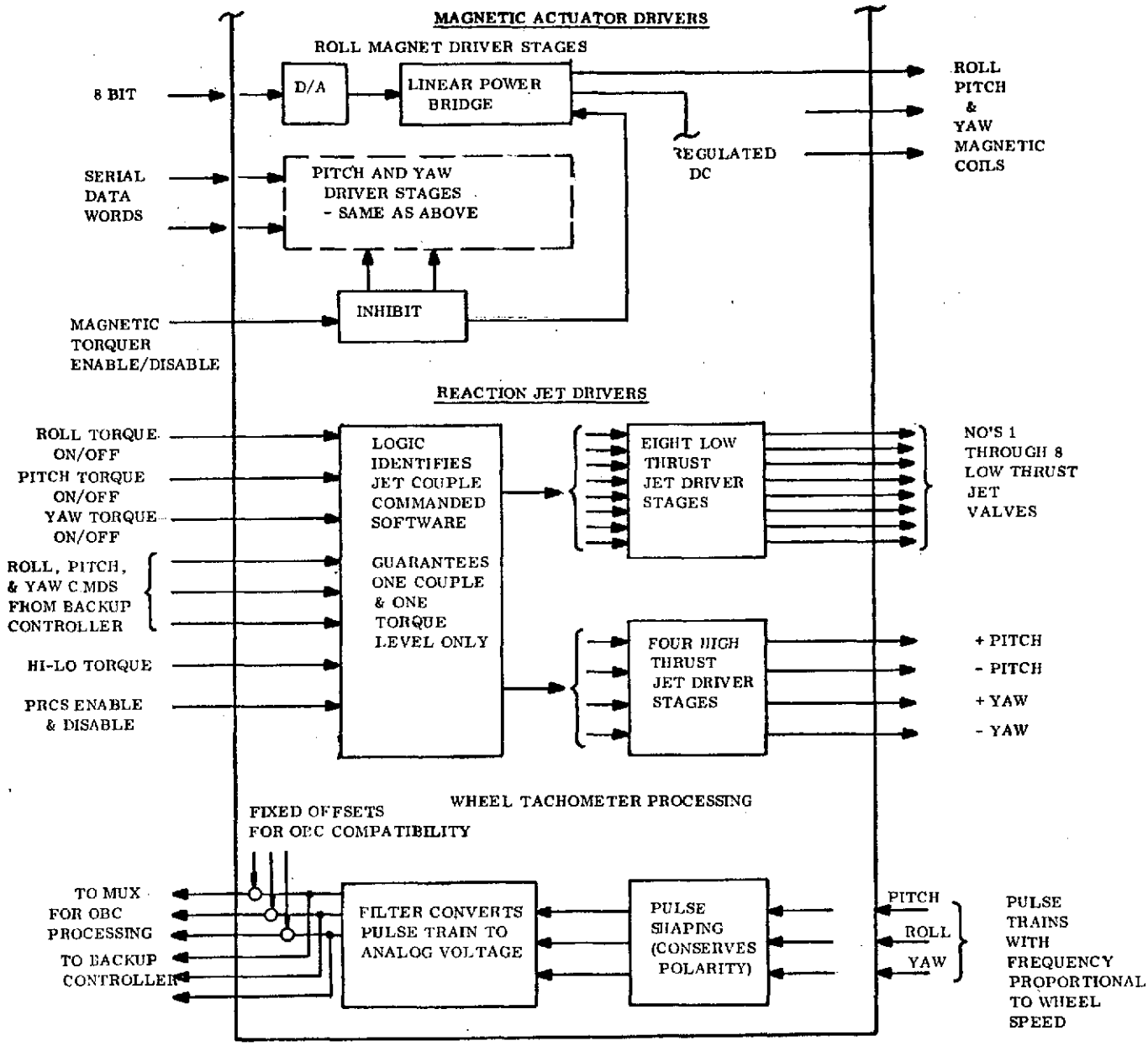

Figure 3.1-33. Electronics

The selected reaction wheels respond to two phase 400 Hz square waves developed by switching unregulated DC power according to an externally supplied command clock.

A second analog input, scaled to the primary D/A input is presented to this control circuit. When this occurs, the D/A will be inhibited and all wheel drivers will be controlled by the back-up controller.

To unload stored momentum resulting from sources of secular disturbance torques, a set of three eight bit words for controlling the currents in orthogonal magnetic torques are shown at the top of figure 3.1-33. The drivers deliver continuous current, proportional to the digital word received by controlling the unregulated DC supply in a power bridge.

Low torque thruster electronics shown in the center of Figure 3.1-33, drive jets used to back up the magnet torquers and also to supply the higher control capability required during orbit maintenance modes. The low thrust jet electronics consist of eight driver states, providing independent on-off control of eight jets. A pitch, roll or yaw couple is obtained by logical combination of two jet drive signals when commanded by software. Note that logic is also employed in the computer to avoid the simultaneous commanding of orthogonal axis couples. These jets can also be driven by the back-up controller in a fashion similar to the reaction wheels, and ambiguities related to the firing of opposing jets are considered acceptable. A second set of thrusters with higher torque capability are located about the pitch and yaw axis to support longer orbit adjust manuever burns. The jet torque command interface will be implemented such that a specified jet couple will be held until commanded off or until inhibited by the pnuematics enable/disable command. A minimum pulse increment is then established by the minimum command interface interval. Note that in normal mode, the PRCS will be disabled since secular external disturbance torques are unloaded by the magnetic torquers.

The only signal processing function performed by the electronics is to convert frequency dependent wheel tachometer pulses to analog voltages equivalent to wheel momentum, shown at the bottom of Figure 3.1-33. The pulses will be bi-directional such that the back-up controller can use the signal directly, but transfer to the computer forces the introduction of a 2.5 volt bias to present the necessary positive level. Similar bias

circuits are used to allow monitoring of magnetic torquer currents and reaction wheel duty cycles through telemetry (not shown).

3.1.4.2.2.3 Interface

The primary interfaces are among the ACS components, and between the ACS components and the on-board processor whose software comprises a considerable portion of the ACS. All the ACS components except two sun sensor heads are mounted within the ACS module and require no other interfaces except power. The component interfaces with the computer are analog, digital, and pulse and all interfaces conform to the requirements of the processor (i.e. 0-5 volts digital, 0-5 volts analog, and 5 volt pulse). The component outputs which are used in the normal mode and which typically require the greatest accuracy (such as IRU output, star sensor output, etc.) are digital as shown in Figure 3.1-34. The momentum wheel and magnetic torquer drivers accept digital words from the computer. The digital interface permits the driver to retain the word until the next word arrives. The "Hold" results in smoother performance from these wheels and torquers. All mode switching commands such as IRU rate change, star sensor threshold change, etc. are performed by discreet commands. Parameters to be telemetered such as temperatures or that do not require high accuracy such as wheel tachometer signals are kept as analog signals.

The backup controller contains the only "non-computer" interface with the ACS components, and this interface is entirely analog.

The interfaces not shown in Figure 3.1-34 are the interfaces between the drive electronics and the PRCS. There are twelve driver outputs consisting of regulated DC ($28 \pm .3$ VDC).

3.1.4.3 Performance

The performance capabilities of the ACS have been derived from analyses, single axis simulations and three axis simulations.

3.1.4.3.1 Error Analysis

The results of the analysis have been combined in Table 3.1-13. The budget contains all the identified error sources. The final performance estimate is based upon an RSS.

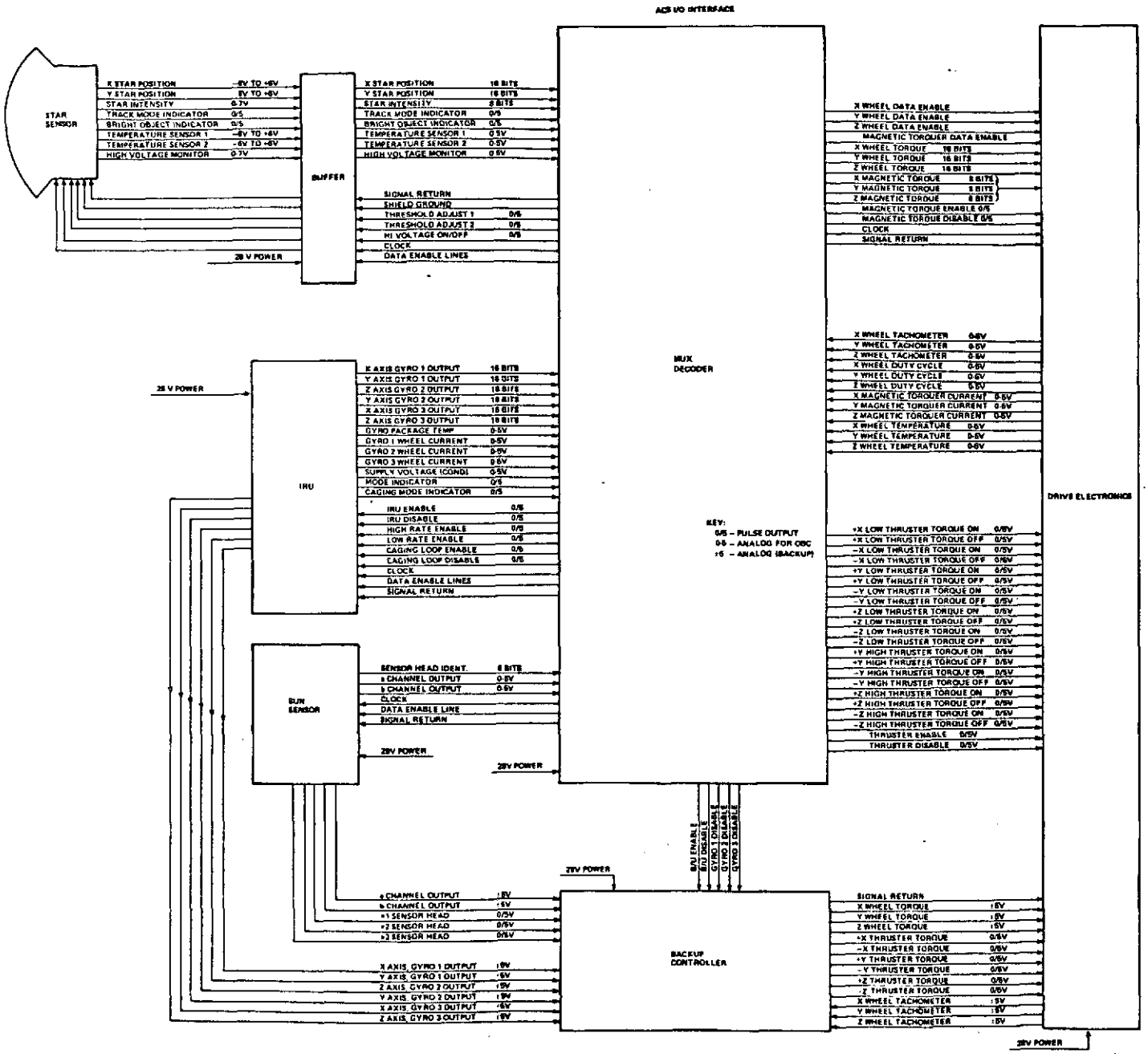

Figure 3.1-34. ACS Input-Output Interface

Table 3.1-13. ACS Performance

Source	ACS Error (arc seconds)		
	Pitch	Roll	Yaw
Star Tracker			
Null Uncertainty Scale Factory Uncertainty Noise Error Kalman Filter	15.0	20.0	5.0
Inertial Reference Unit			
Random Drift	1.3	1.3	1.3
Scale Factor Stability	1.8	0.5	0.5
Alignment Stability	4.1	4.1	4.1
Attitude Computation	1.0	1.0	1.0
Star Position	1.9	1.0	3.3
Control Loop			
Gyro Noise	1.3	1.3	1.3
Sample Data Noise	<.1	<.1	<.1
Dynamic Errors	.2	.2	.2
Solar Array	.1	---	---
Antenna	.5	.5	---
Deadband	.1	.1	.1
SUBTOTAL (RSS)	16.0 (.0044°)	20.6 (.0057°)	7.6 (.0021°)
Spacecraft Ephemeris	11.5	11.5	
TOTAL (RSS)	19.7 (.0055°)	23.6 (.0066°)	7.6 (.0021°)

Star Tracker Error Sources

It is evident from the Table that the largest source of attitude error is the Star Tracker/ Kalman Filter error. Typically, a star tracker would have an error estimate for null uncertainty, scale factor uncertainty, and noise. However, with the existing calibration process, these terms have been "lumped" into a single error of 10 arc seconds. The accuracy of the star sensor is not, however, the accuracy of the ACS at star update because of the Kalman Filter. The filter is a software routine which statistically calibrates the gyros (for bias) and attenuates the noise of the star sensor. Figure 3.1-35 shows the covariance results (smoothed) for the Kalman Filter for the nominal spacecraft with the initial conditions shown. For this analysis, the star update interval was 600 seconds, with two updates taken on each star. The 600 seconds is long compared to the on-orbit average of 150 seconds for the low altitude orbits, and should provide pessimistic results. The results indicate pitch, roll, and yaw capabilities of 15, 20 and 5 arc seconds respectively, at the end of 21,000 seconds. The attitude estimate improves rapidly from initial values, dropping to less than one arc minute in one orbit on all axes.

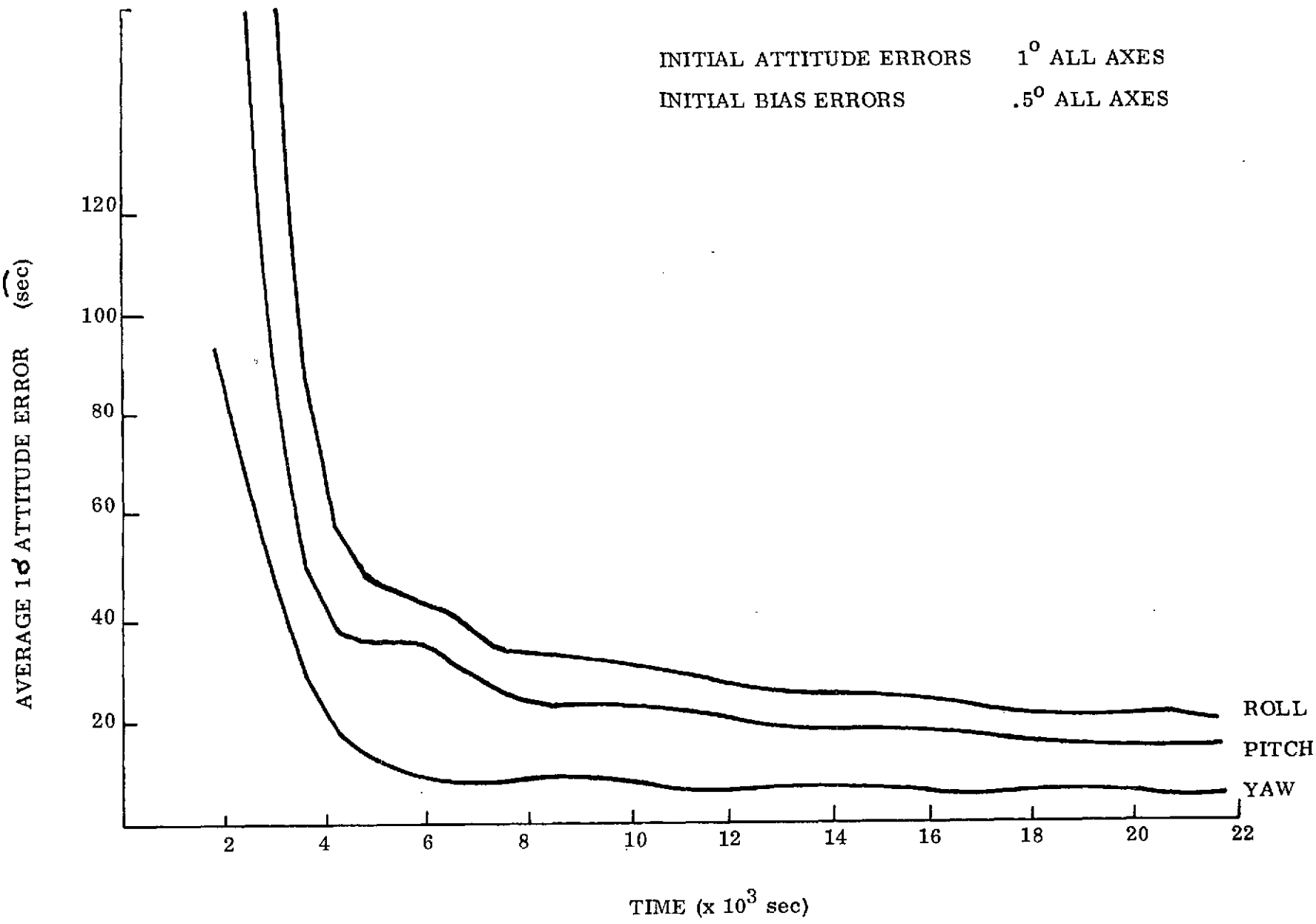

Figure 3.1-35. Covariance Results - Attitude Error

The yaw attitude is the most accurate, as would be expected from the mounting arrangement of the sensors, which favors yaw. The unresolvable axis of the star sensor (about the line of sight) affects pitch and roll accuracies, and causes the large uncertainty. The roll error is the largest because it is 35 degrees (approximately) to the star sensor line of sight (LOS) as compared to the 55 degrees angle between the LOS and the pitch axis.

As mentioned earlier, the Kalman Filter attempts to calibrate the Inertial Reference Unit, and the accuracy of the results is dependent upon the IRU characteristics. The filter is not strongly affected by gyro bias, which is determined as shown in Figure 3.1-36. The filter accuracy does, however, depend upon the noise content of the gyro as indicated in Figure 3.1-37. However, the influence is small unless the IRU random error is on the order of .1 deg/hr. The current IRU specification is .003 (3σ) deg/hr. which produces a negligible impact on the performance.

Other factors which affect the accuracy of the ACS are the field-of-view of the sensor and the RMS error. The field-of-view of the selected star sensor is $8^{o} \times 8^{o}$, with an RMS error of 10 arc seconds as mentioned earlier. With a $6^{o} \times 6^{o}$ field-of-view (obtained by ignoring the outer edge of the sensor) the RMS error reduces to approximately 5 arc seconds. The overall pointing error decreases linearly with sensor accuracy (Figure 3.1-38), but increases with decreasing fields of view (Figure 3.1-39). The approach taken of updating twice on each star combines the advantages of using a wide field of view, and an inaccurate measurement noise matrix, with a narrow field of view and an accurate measurement. The resulting performance will show an improvement over that presented in Figure 3.1-35. The exact improvement, however, must be evaluated by computer simulation, and, therefore, has not been quoted in the error budget.

IRU Error Sources

a) Random Drift: Vendor data on random drift is presented as a variation in detected rate over fixed sample intervals, similar to that shown in Figure 3.1-40. The sample interval will be variable on EOS due to the expected spread in star up-date, but will be limited to the 100 to 1000 second intervals in normal mode. The Kalman Filter will smooth the influence of curves like Figure 3.1-40 and a random drift value associated

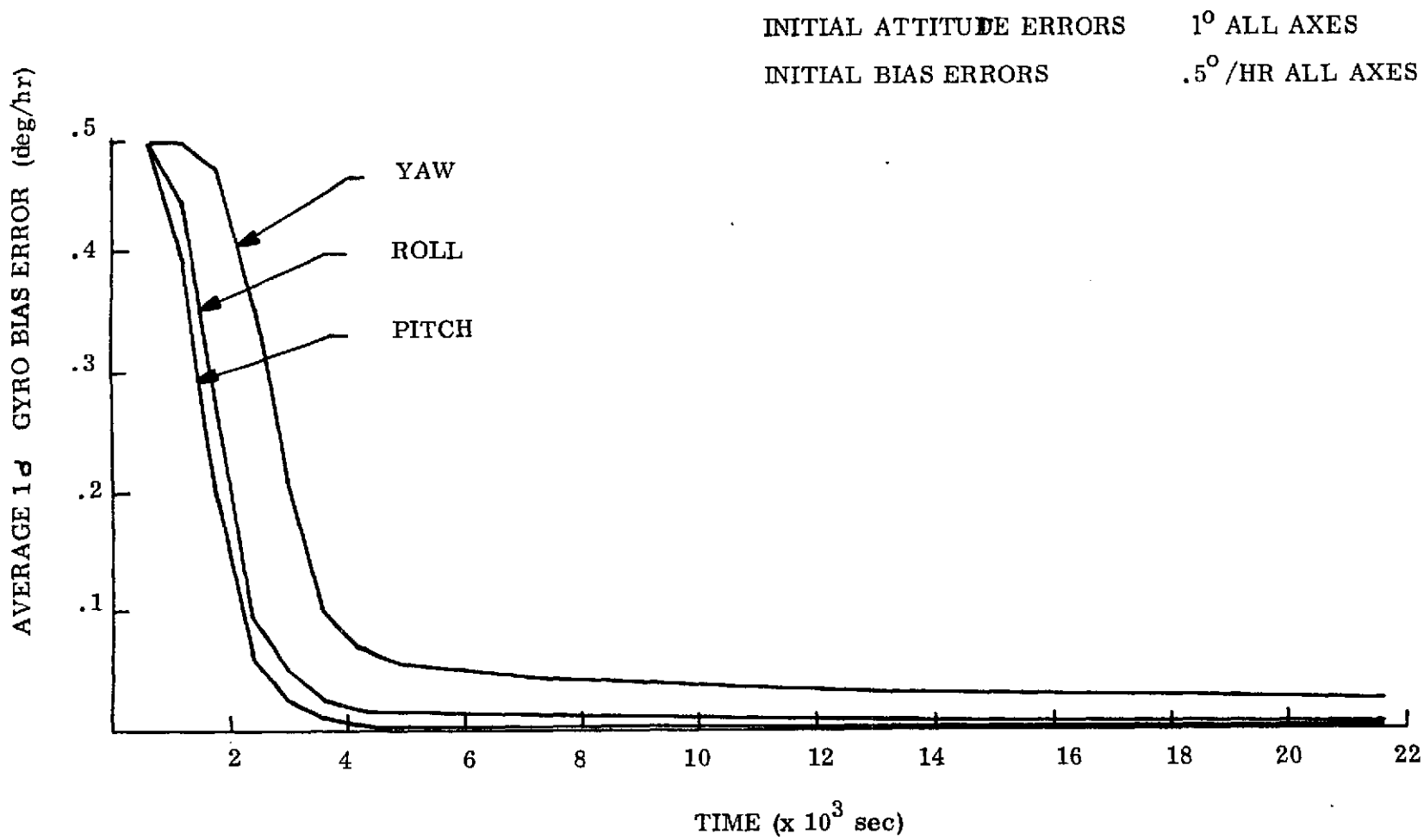

Figure 3.1-36. Covariance Results - Gyro Bias

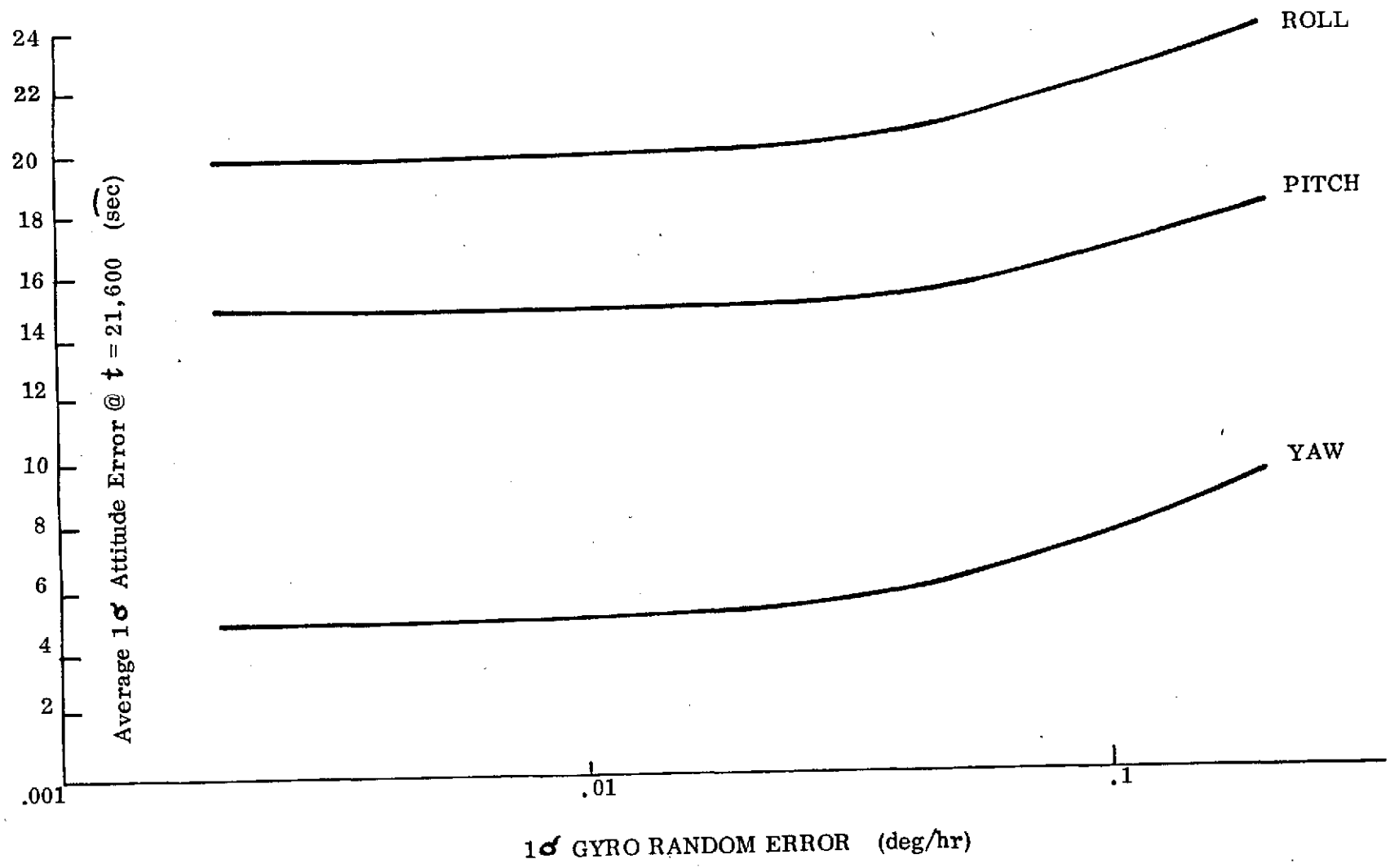

Figure 3.1-37. Covariance Results - Gyro Random Error Effect on Attitude Error

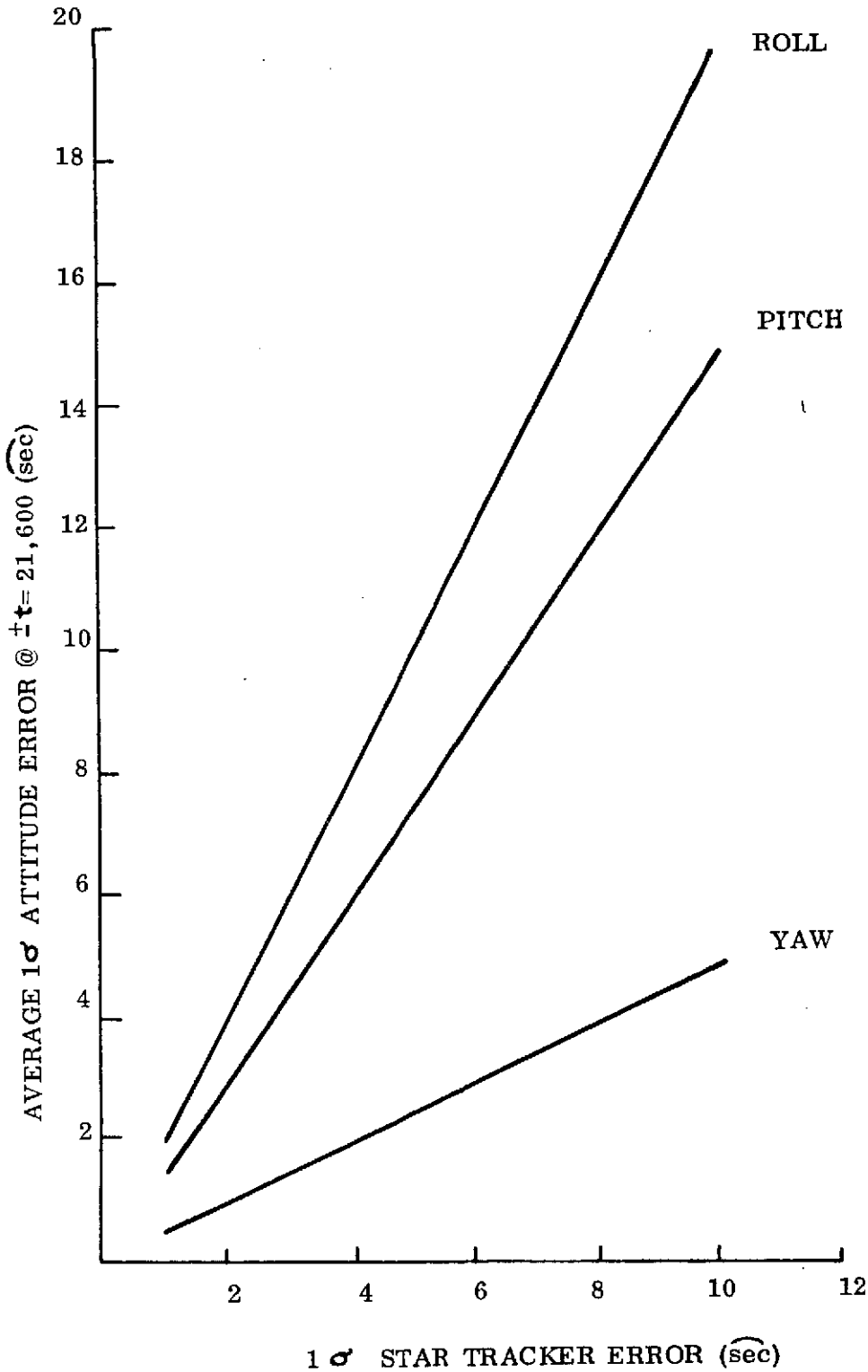

Figure 3.1-38
Covariance Results - Effect of Star Sensor Accuracy on Attitude Error

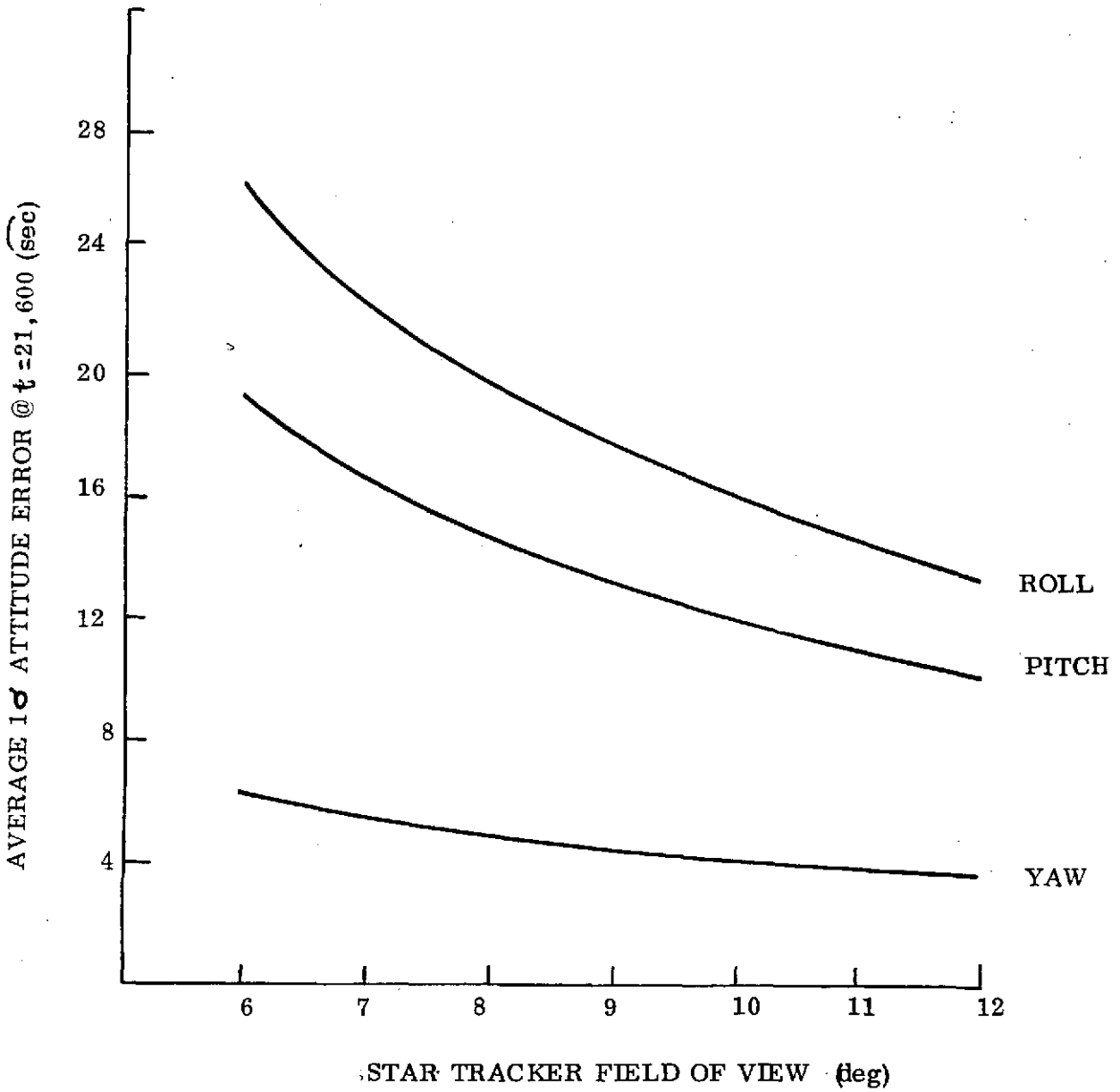

Figure 3.1-39
Covariance Results - Effect of Field of View on Attitude Accuracy

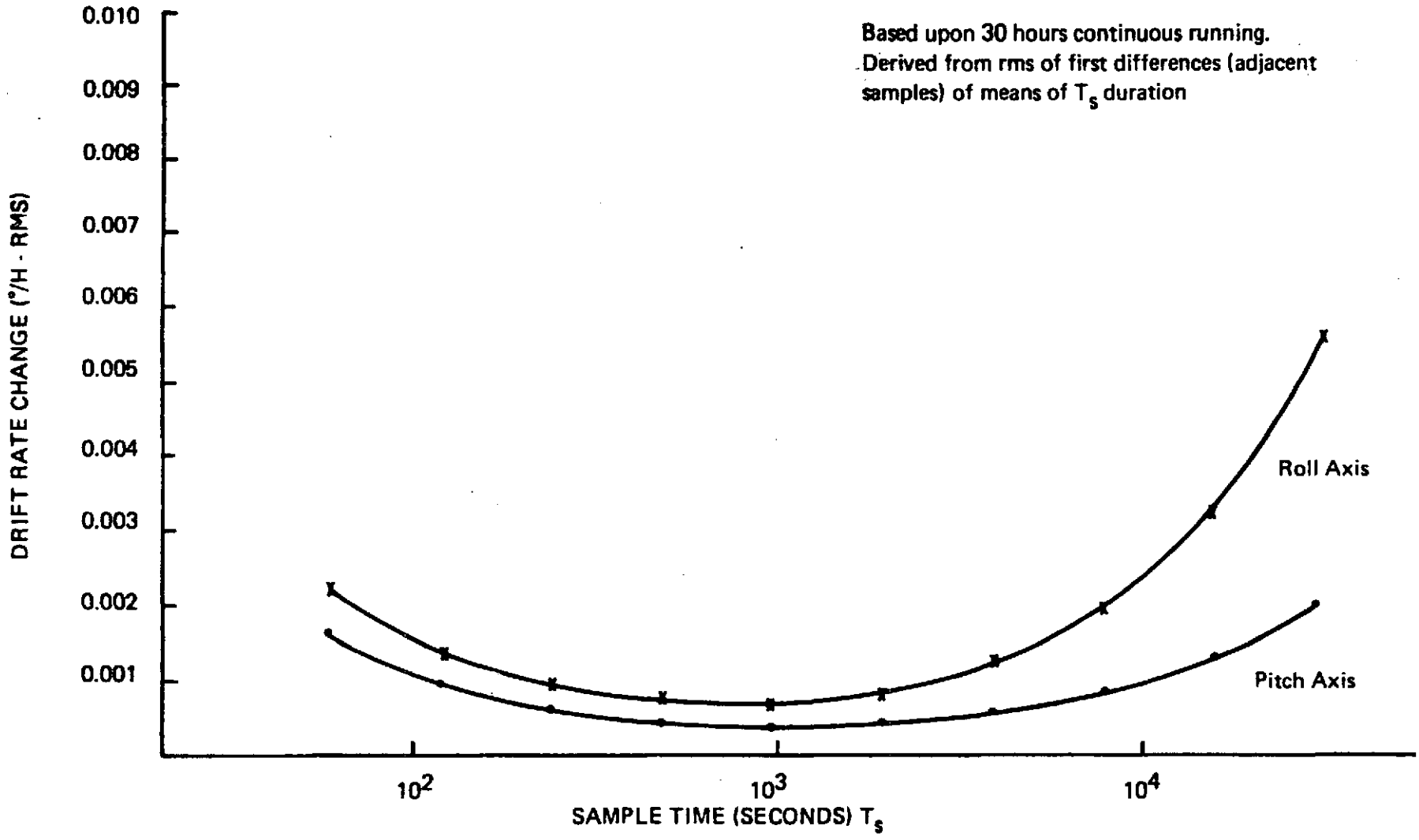

Figure 3.1-40. Evaluation of Random Drift

with average star up-date interval can be chosen. This average interval is expected to be no shorter than 150 seconds, leading to a random drift rate of .0013 arc sec per second. A 1000 second interval between star up-dates yields a value for position accuracy of 1.3 arc sec.

b) Scale Factor Stability: All the IRU's considered in this study are operated in a binary pulse width modulated rebalance loop with two levels of caging loop torque capability. Normal mode consists of maintaining zero rate about two axes and a low rate about the third axis, such that only the low torque scale factor requires accurate stability. Position errors assigned to scale factor will vary due to time dependent sources such as temperature and second order variations in orbit rate. Assuming a .02% short term variation in scale factor and a 3% variation in average orbit rate and position, the uncertainty will be 1.3 arc sec. Two axis non-floated gyros are used to sense rate in the IRU and will be relatively insensitive to temperature variations. Heaters will be provided to hold temperature above ambient in a 5 degree deadband. The variance over 1000 seconds in this temperature controller is approximately 10% and gyro drift sensitivity is .001 deg/hr/F^0. The total variation over 1000 seconds will be 0.5 arc sec, and the pitch error is 1.8 arc sec.

c) Alignment Stability: Fixed or long term variations in the IRU reference with respect to the star sensor reference will appear as biases to be taken out in the recursive filter process or ground processing of payload data. The major source of time variance in alignment is due to thermal deformation of the mounting plate. To minimize the effects of this distortion, the IRU will be located close to the star sensor and both will be thermally controlled such that variations in temperature gradient will be reduced to 1 deg. When held to these constraints, deformation will produce no more than the 4 arc sec variation indicated in the error budget.

Attitude Computation

Attitude computation is the error associated with computer processing of the IRU data between star updates. It is primarily the truncation error which is integrated over the span between updates. Simulations have indicated the error to be less than one arc second.

Star Position

Star position errors combine the errors in the star catalogs (1 arc sec.) with the velocity abberation errors associated with the earth moving in its orbit (approximately 21 arc seconds) and the spacecraft moving in its orbit (approximately 4 arc seconds). The error has been calculated assuming the on-board star table is updated once per week. The error is primarily in yaw because of the orientation of the star sensor with respect to the spacecraft.

Control Loop Error Sources

The control systems for all the spacecraft considered in the EOS study were designed to digitally process position and rate data from inertial quality gyros to control on-axis reaction wheels. The best estimate of vehicle performance in the presence of gyro noise, digital processor noise, control system mechanical noise and other subsystem mechanical disturbances is obtained through modeling these noise sources and the control subsystem in three axes. However, an excellent approximation to vehicle response to these types of sources can be obtained from a simplified, linear, single axis simulation. Constraints on the control system and noise sources that make this approximation valid are:

- The amplitudes of the noise sources considered are low enough to insure linear operation of all sensors and actuators.
- There is no correlation between occurrences of the separate noise sources.
- Inertia coupling terms on the vehicle are low ($<$ 1%) due to the cancelling of inertia cross product terms in the software.

One of the major sources of noise lies within the gyro itself, which is primary "short term" rate and position reference. Results from analyses of its noise content carry the additional penalty of being undetectable, as well as uncontrollable.

The simplified control loop configuration is identified in Figure 3.1-41.

The reaction wheel time constant and its compensator in the computer have been eliminated, implying a perfect setting of the digital compensator characteristics. Noise in the reaction wheels is very low and will not contribute to vehicle rate errors, but time constants must be matched to avoid an additional delay in settling from position steps. Perfect cancellation of

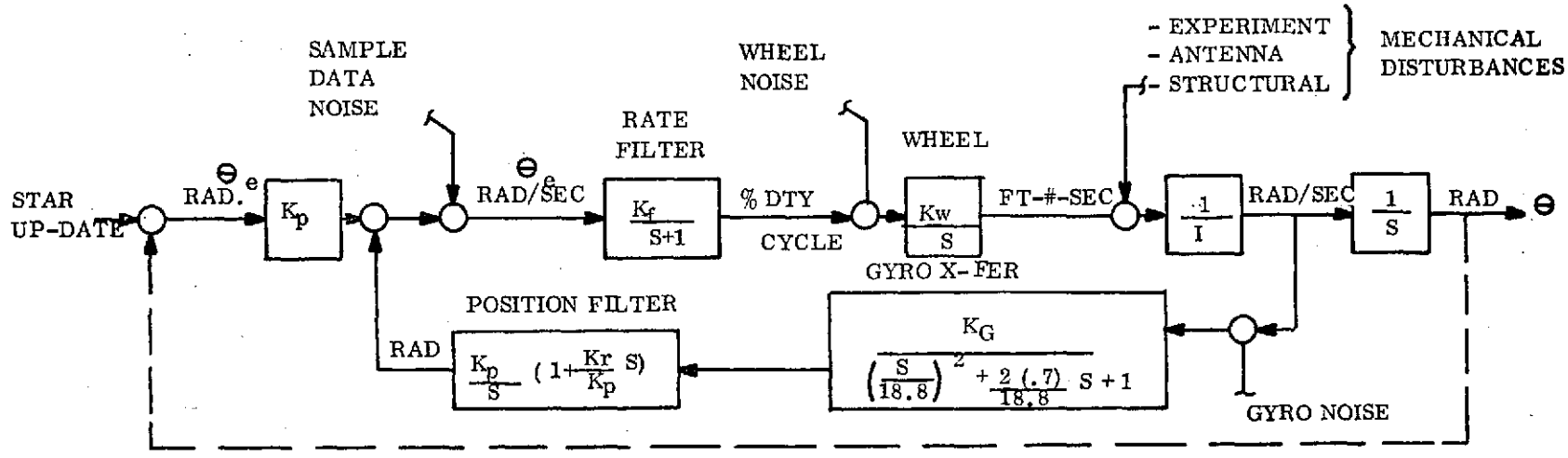

Figure 3.1-41. Simplified Single Axis Model of EOS Control

this time constant is approached by adjusting compensator parameters in orbit.

a) Gyro Noise: Gyro noise is represented as a magnitude over some frequency range. Experience with inertial quality gyros indicate that this noise is white, magnitude equal to:

$$40 \times 10^{12} \quad \frac{(\text{deg/sec})^2}{\text{Hz}}$$

To evaluate vehicle rate response to this noise, the integral:

$$(\text{RMS Rate})^2 = \frac{1}{2\pi} \int_{-\infty}^{\infty} F(S) \cdot F(-S) \, ds$$

was evaluated.

F(S) is the rejection characteristic obtained by finding the closed loop transfer function of Figure 3.1-41 (shown in Figure 3.1-42).

$$\frac{\dot{\theta}}{\text{gyro noise}} = \frac{(1 + S/.275)}{(S/.479 + 1) \cdot \begin{bmatrix} w = .757 \\ \zeta = .558 \end{bmatrix} \cdot \begin{bmatrix} w = 18.9 \\ \zeta = .7 \end{bmatrix}} = F(S)$$

A time-sharing digital computer program that forma a digital approximation to this integral over a user specified frequency interval and to a user specified accuracy level was used for solution. The solution obtained over the frequency range .0001 through 100 rad/sec was

$$\dot{\theta}g \text{ RMS} = 5.2 \times 10^{-6} \text{ deg/sec} = .02 \text{ deg/hr}$$

Vehicle position response to the same noise source is obtained by introducing a free "S", i.e.:

$$(\text{RMS Position})^2 = \frac{1}{2\pi} \int_{-\infty}^{\infty} \frac{F(S)}{S} \cdot \frac{F(-S)}{S} \, ds$$

$$\theta g \text{ RMS} = 3.6 \times 10^{-4} \text{ deg} = 1.3 \widehat{\text{sec}}$$

When compared to vendor data, the postion jitter is conservative by a factor of 2 to 3 which may be the result of filtering techniques used when recovering position excursions from gyro information. A comparison of rate noise results to vendor data shows the chosen PSD to be optimistic by a factor of 2, indicating that results obtained in this study can be used as representative of the expected

performance of existing inertial quality, single degree of freedom, floated, gas bearing gyros. An improvement in vehicle short-term performance can only be achieved through use of the recently developed third-generation gyro.

The gyro noise is the largest source of noise within the ACS, as mentioned earlier and RMS noise error, reflected as spacecraft jitter, was calculated for the noise frequency range of 10^{-4} rad/sec to 100 rad/sec. The analysis indicated that at frequencies above 0.2 rad/sec, the noise error was 10^{-5} degrees. Similarly, the noise error above 5×10^{-3} rad/sec was 5.1×10^{-5} degrees and above 10^{-4} rad/sec; the noise error was 3.6×10^{-4} deg. All these errors are well within the specification .

b) Sample Data Noise: A worst-case model of sample data noise assumes a sine wave with frequency content in the worst part of the rejection curve to this noise source, with amplitude equal to the computer output word least significant bit. Rejection of the vehicle control system to sample data noise is obtained

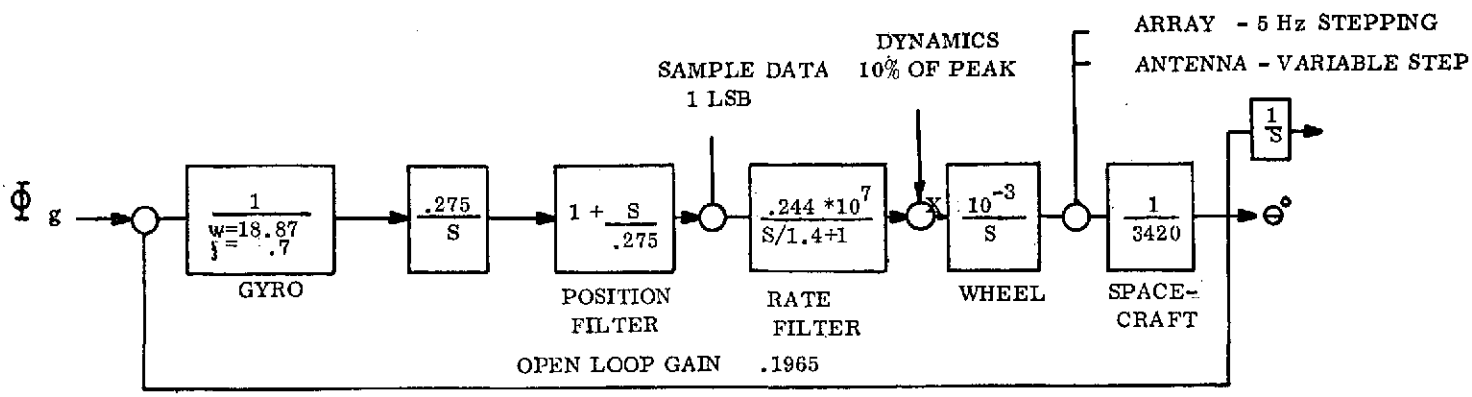

$$\frac{\Theta^\circ}{\Phi_g} = \frac{(1 + S/.275)}{\begin{bmatrix} w = .757 \\ \xi = .558 \end{bmatrix} * \begin{bmatrix} w = 18.9 \\ \xi = .7 \end{bmatrix} * \left(\frac{S}{.479} + 1\right)}$$

Figure 3.1-42. Evaluation of Noise Response for Specific Loop Parameters

by combining the following (See Figure 3.1-42):

$$\frac{\dot{\theta}}{\text{sample data}} = \frac{\dot{\theta}}{\text{gyro}} \times \frac{\begin{matrix} w = 18.87 \\ \zeta = .7 \end{matrix}}{\frac{.275}{S}\left[1 + \frac{S}{.275}\right]} = \frac{S}{.275\,(S/.479+1)} \quad \begin{bmatrix} w = .757 \\ \zeta = .558 \end{bmatrix}$$

Minimum rejection will occur over frequencies from:

$.5 < w < .7$ and at $w = .6$ the gain is:

$$\left.\frac{\dot{\theta}}{\text{sample data}}\right|_{w = .6} = 1.36 \quad \frac{\text{rad/sec}}{\text{rad/sec}}$$

The expected word length transmitted from the computer is 10 bits, to be spread linearly over a wheel duty cycle from 0 to 100%. The granularity is equivalent to .2%. Converting through the filter gain "K_F" this represents an LSB weight of:

$$\dot{\theta}_{LSB} = 4.7 \times 10^{-6} \text{ deg/sec}$$

The worst case influence of LSB weight is calculated as:

$$\dot{\theta} \text{ sample data} = 4.7 \times 10^{-6} \times 1.36 = 6.38 \times 10^{-6} \ ^{\circ}/_{SEC}$$

Vehicle position response to LSB weight is negligible, as seen when the rejection curve is multiplied by "1/S". Worst case response occurs below .5 rad/sec:

$$\theta \text{ Sample Data} = \frac{4.7 \times 10^{-6}}{.275} = 17 \times 10^{-6} \text{ deg} = \text{Negligible}$$

c) Dynamic Errors: It has already been shown that error due to momentum wheel speed is compensated by a free integration in the computer as shown in Figure 3.1-42. Low frequency dynamic torques on the vehicle due to external disturbances are expected to be very small, and high frequency troques due to solar array and antenna drives are treated separately. As a worst case, assuming residual torque demands on the wheels will not exceed 10% of maximum, the dynamic error (calculated from Figure 3.1-42) is about 0.2 arc sec.

d) Solar Array: The solar array is driven by a fixed frequency stepper motor of 5 steps per second. Worst case position disturbance due to the stepper will be about the vehicle pitch axis only, and the angle will be attenuated by the solar array to vehicle inertia ratio. The resulting error is 0.1 arc sec.

e) Antenna: The antenna is also driven by a stepper motor but as stepping rates that vary with tracking rate. An analysis of the antenna dynamics in conjunction with a control diagram similar to Figure 3.1-42 for the antenna drive, shows a minimum rejection frequency to torque pulses at .8 rad/sec and a drive train resonance frequency close to 10 rad/sec. Worst case position jitter will occur at the resonance frequency beyond the controller bandwidth. For a drive train damping coefficient of 0.1, position LOS jitter at 10 rad/sec is 125 arc-seconds which will couple to the vehicle by the inertia ratios, resulting in 0.5 arc sec error.

f) Deadband: A controller deadband is included to avoid the dissipation of power at the wheel driver due to the presence of sensor noise. The most significant source of sensor noise is at the gyro, and enters the control loop in the form of rate noise. A noise rejection characteristic was developed to determine RMS percent wheel torque as a function of gyro rate noise by introducing the transfer function for the wheel time constant compensation network. The computer program was used to obtain 2.1% RMS, and the controller deadband should then be set 3 times this value, since torques will actually be developed as the result of noise peaks from the gyro. A 6% wheel deadband will introduce position offsets (from Figure 3.1-42) of 0.1 arc-sec.

Spacecraft Ephemeris

Spacecraft ephemeris errors are based upon a 400 meter (one sigma) ephemeris position error. This value has been selected by GE as representing the estimated accuracy capability of predicting the spacecraft orbital position (in advance). The angular error shown on the chart is with respect to the geocenter as required by the specification. It should be recognized that although the error is included as an ACS error, the ACS can do nothing to improve it. The error is basically an error of ACS command, not ACS execution. For this reason it is shown separately on the table.

3.1.4.3.2 Disturbance Torque Analyses

Spacecraft are acted upon by external disturbance torques. These torques integrate to cause a momentum buildup which is accumulated by the momentum wheels. Torques with components which are constant in inertial space (secular torques) integrate without bound, and the momentum wheels must be unloaded to maintain spacecraft control. Hence both the momentum wheels and the momentum unloading systems are affected.

At low altitudes, four torques are of major significance, solar torque, aerodynamic torque, gravity gradient torque and magnetic torque.

Solar torque is caused by the pressure of sunlight (approximately 10^{-7} lb/ft^2) creating a force on the spacecraft which does not pass through its center of mass. Solar torque is totally configuration dependent and varies with spacecraft area, sun angle, reflectivity characteristics, etc. The EOS configuration simulated is shown in Figure 3.1-43. This configuration is the largest configuration considered in the study, and represents a worst case for momentum accumulation.

The major cause of solar torque on the configuration is the solar array. The solar array is physically located on the pitch ($\hat{y}$) axis, with its center of pressure approximately fifteen feet from the spacecraft center of mass, along the $-\hat{y}$ axis. The array is controlled to point to the sun, and the solar force is, therefore, constant, independent of orbital position (excluding eclipse). Since the center of pressure - center of mass relationship remains constant in inertial space, solar torque is secular (i.e., constant in inertial space). The solar torque momentum, therefore, increases linearly with time, and for all practical purposes, without bound. The solar torque momentum accumulated by EOS is in the orbit plane, and is approximately in the north-south direction.

Aerodynamic torque is caused by the aerodynamic pressure associated with the spacecraft's passage through the atmosphere. The torque results from the aerodynamic force (drag force) not passing through the spacecraft center of mass. Like solar torque, aerodynamic torque is totally configuration dependent. For EOS, the major source of aerodynamic torque is also the solar array. The torque caused by the array is primarily about the yaw ($\hat{z}$) axis of the spacecraft and is in the same direction (on the $\hat{z}$ axis) at all points in the orbit. Consequently, the torque is not fixed in inertial space but rotates at orbital

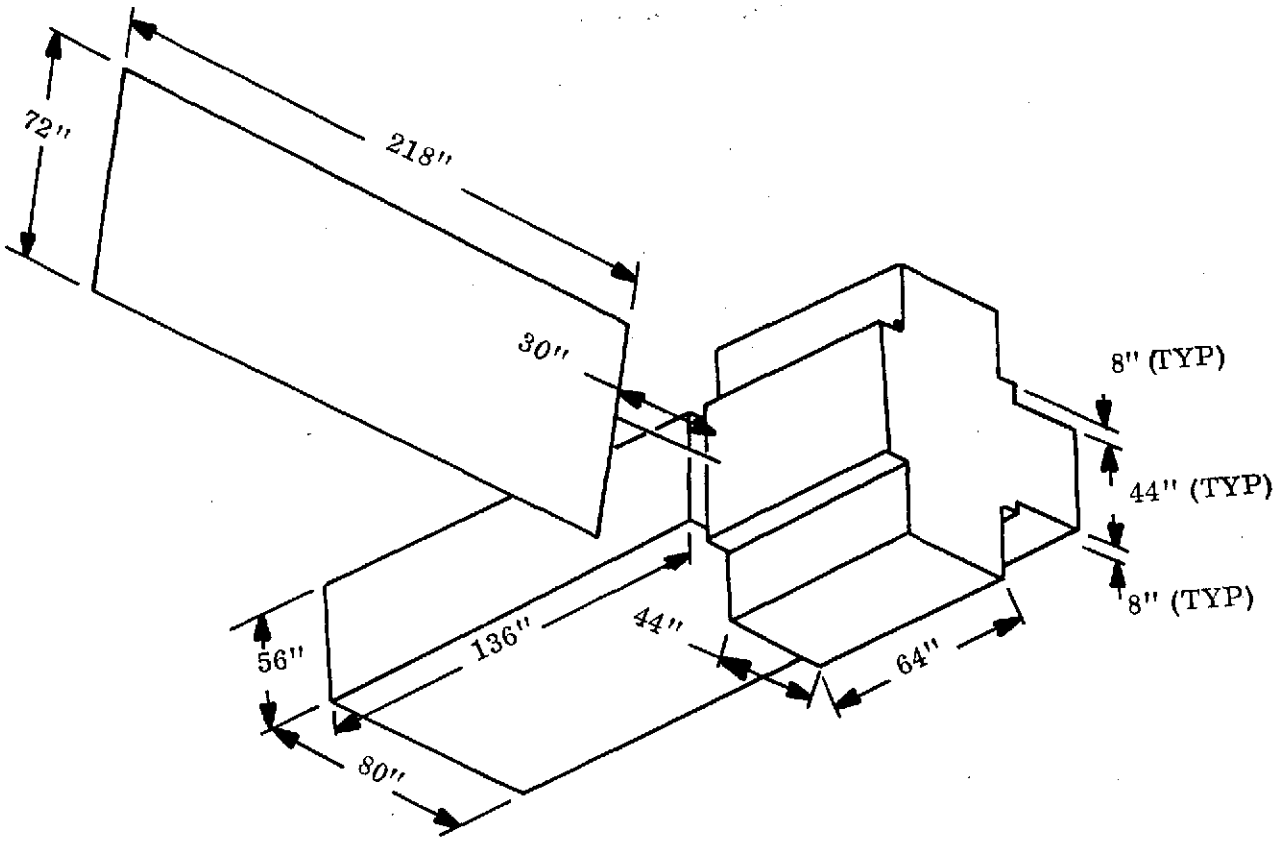

Spacecraft Moments/Products of Inertia

I_{xx} = 3423 slug-ft^2

I_{yy} = 8331 slug-ft^2

I_{zz} = 5763 slug-ft^2

I_{xy} = 150 slug-ft^2

I_{xz} = 25 slug-ft^2

I_{yz} = 10 slug-ft^2

Spacecraft Magnetic Moment (Fixed)

M_{sx} = 10000 pole-cm

M_{sy} = 10000 pole-cm

M_{sz} = 10000 pole-cm

Figure 3.1-43. Simulation Configuration

rate, and therefore, produces a sinusoidal momentum.

Gravity gradient torques are caused by the gradient in the earth's gravitational field acting on the spacecraft moments and products of inertia. For an earth oriented spacecraft, only two gravity gradient torques appear, one in the spacecraft pitch ($\hat{y}$) axis, and one in the spacecraft roll ($\hat{x}$) axis. There is never a torque about the local vertical, and, hence, no torque about the spacecraft yaw ($\hat{z}$) axis.

The pitch gravity gradient torque is proportional to the spacecraft xz product of inertia, and since the pitch axis changes direction only slowly (in inertial space), the resulting pitch momentum increases linearly with time.

The roll gravity gradient torque is a constant on the roll axis, and since the spacecraft is rotating at orbital rate, the roll torque vector rotates in inertial space. A steady state dynamical condition is reached when the yaw momentum wheel reaches a constant momentum value. This value is proportional to the roll gravity gradient torque divided by orbital rate.

Magnetic torques are caused by a spacecraft magnetic dipole interacting with the earth's magnetic field. In general, magnetic torques occur about all three spacecraft axis, and for an earth oriented spacecraft with a permanent magnetic dipole, all but one of the torques are sinusoidal. The secular torque is caused by the pitch axis dipole, and produces an angular momentum vector in the orbit plane and roughly in the equatorial plane.

Figure 3.1-44 shows the momentum wheel profiles for the spacecraft in a 418 nm orbit with no momentum unloading. The large secular torques are obvious from the growing amplitudes on all the axes. To eliminate the effect of the large secular torques, momentum unloading is required.

Momentum unloading is accomplished by magnetic torquers which are controlled by the OBC. To size the torquers, two parameters must be determined; a constant of proportionality (gain) and the peak dipole encountered. A series of computer simulations were made using a cross product law with different values of dipole gain. The effect of the unloading is to eliminate the secular momentum growth, and replace it with either a bias momentum position, or with a sinusoidal momentum profile, or both. The sinusoidal

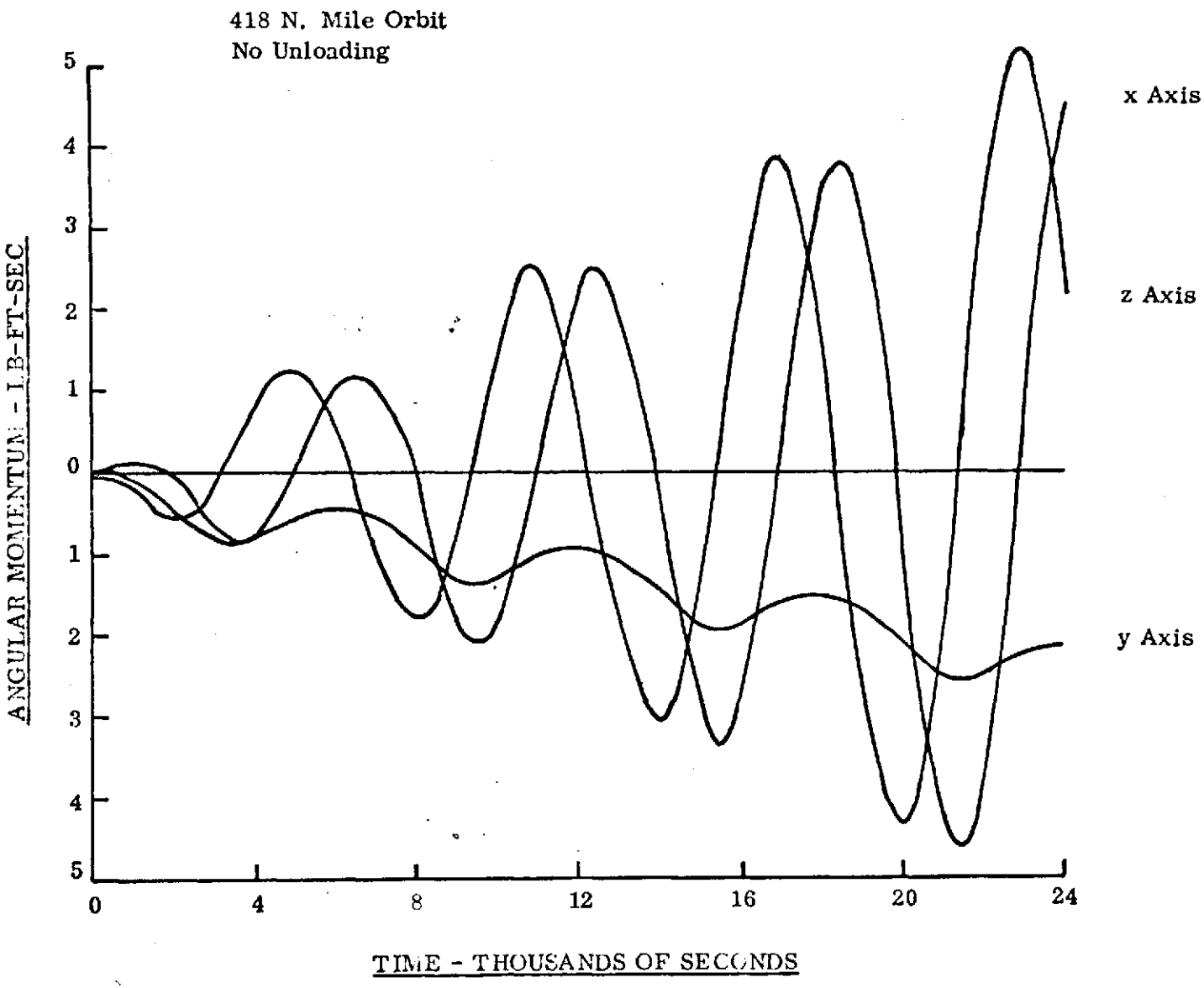

Figure 3.1-44. Momentum Accumulation - Spacecraft Coordinates

characteristic results from the dependency of the unloading capability on location in orbit. The results of the simulations are summarized in Table 3.1-14 (which considers only the peak momentum).

Table 3.1-14. Results from Torquer Proportionality Studies

Gain pole-cm/ (lb-ft-sec-oersted)	Maximum Dipole (Single Axis) (pole-cm)	Maximum Wheel Momentum (lb-ft-sec)
20,000	15,500	2.36
30,000	18,200	1.98
40,000	19,600	1.43
50,000	20,600	1.19
60,000	21,800	1.03
70,000	22,600	.903

As indicated in Table 3.1-14, increasing the gain reduces the peak value of the accumulated momentum. Hence, a possible tradeoff between momentum wheel size and magnetic torquer size is indicated. However, the peak value of torquer dipole does not change as significantly with gain as the wheel momentum. The main effect is to reduce the wheel momentum content required to reach the peak dipole. The high gain has the advantage in that the low wheel speed can be achieved with a low attitude error (proportional control effect).

The momentum profile for the gain of 70,000 is shown in Figure 3.1-45 for all three spacecraft axes. The steady increase in momentum observed in Figure 3.1-44 has been eliminated and has been replaced by a sinusoidal variation. The peak momentums are .76 lb-ft-sec in $\hat{x}$, .5 lb-ft-sec in $\hat{y}$, and .90 lb-ft-sec in $\hat{z}$. Based upon these results, a gain of 70,000 pole-cm was selected, with a peak dipole capability of 30,000 pole-cm/axis.

The momentum wheel sizing was performed based upon these results, and the effect of internal momentum sources. Table 3.1-15 shows the momentum values, and the momentum requirement for the wheel of 2.8 lb-ft-sec. An evaluation of the size, weight, and power requirement of existing wheels led to the selection of the 7 lb-ft-sec momentum wheel manufactured by Sperry (Section 3.1.4.2.2.2.4). The large momentum storage and torque capability provides the ACS with the flexibility of accommodating a large number of missions.

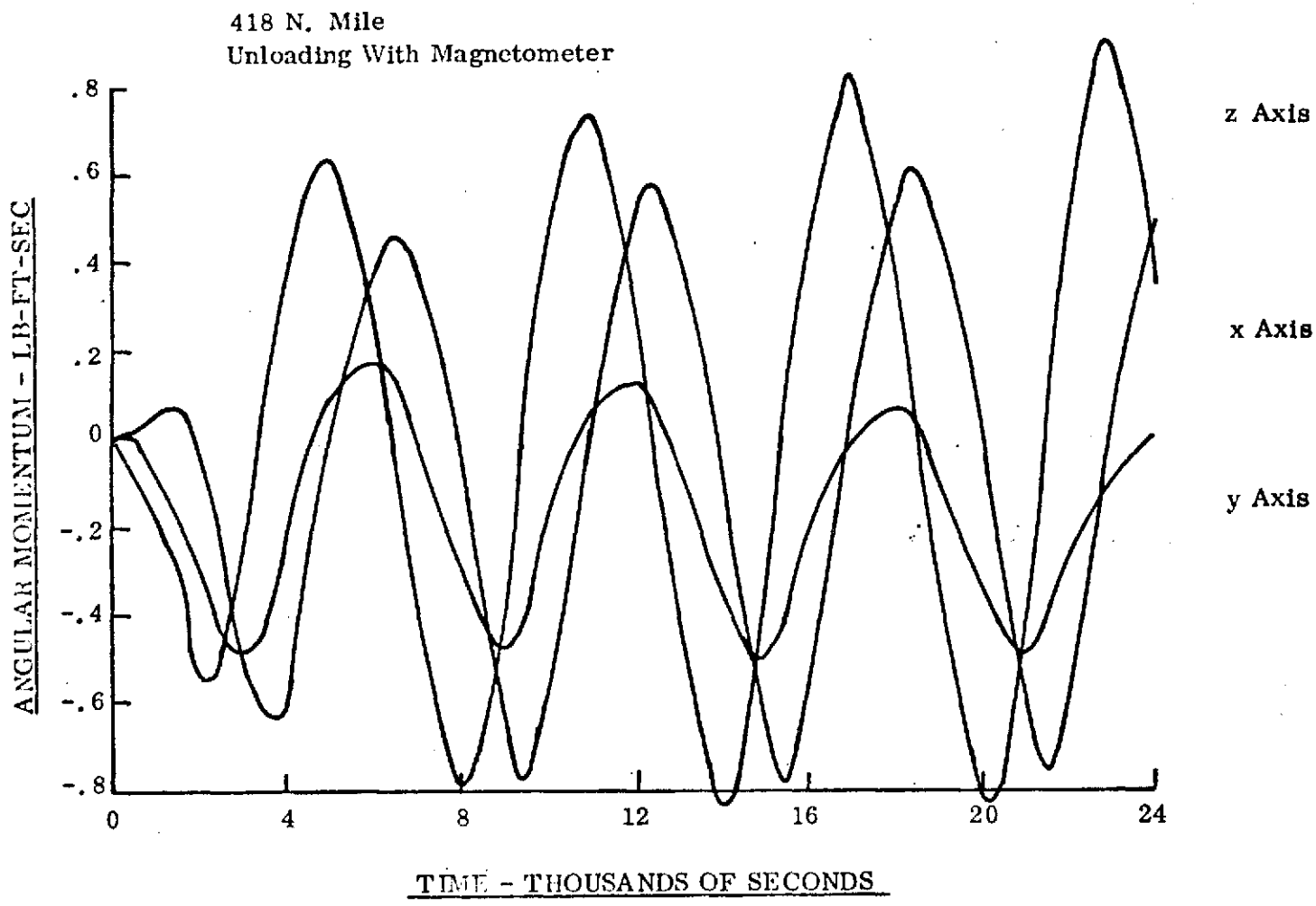

Figure 3.1-45. Momentum Accumulation - Spacecraft Coordinates

Table 3.1-15. Momentum Wheel Sizing

Source	Momentum (lb-ft-sec)
External Torques	0.9
Internal Torques	
Payload	0.2
Antenna	0.3
Summation	1.4
Margin	1.4
TOTAL	2.8

3.1.4.3.3 Star Sensor Orientation Analyses

In evaluating the star sensors for the missions under consideration, operating field of view, sensitivity, and accuracy were considered simultaneously. One of the significant differences is the detector type. Two types of sensors are in use, a silicon photovoltaic detector and an S-20 photomultiplier. Silicon detectors have a broad spectral response, peaking in the near infra-red. S-20 also has a broad spectrum range, but it peaks in the blue-violet end of the visible spectrum. Consequently, the two detector types will not detect the same stars with the same sensitivities. The effect of the difference is particularly evident when the time between star updates is calculated. Figure 3.1-46 is a plot of the update time interval as a function of star sensor orientation and orbit right ascension. The points are obtained using the performance characteristics of a silicon star crossing detector with a ± 4 degree of field of view and a sensitivity of 3.65. The points are quite close, and they indicate angular travel between updates is typically better than 60 degrees (approximately 1000 seconds in the nominal 418 nm orbit) for star sensors oriented close to the orbit plane. The star sensor orientation of 35 degrees was selected as the optimum since it is not only a good orientation from the star sighting standpoint, but avoids the sun entering the field of view of the star sensor for the EOS-A orbit and configuration. Figure 3.1-47 shows the maximum angle between updates for the star sensor inclined 35 degrees and indicates that most of the star updates are less than 60 degrees as estimated from Figure 3.1-46.

An analysis identical to the one above was performed using an S-20 detector with the star magnitude limit also set at 3.65. The result is shown in Figure 3.1-48 and is considerably

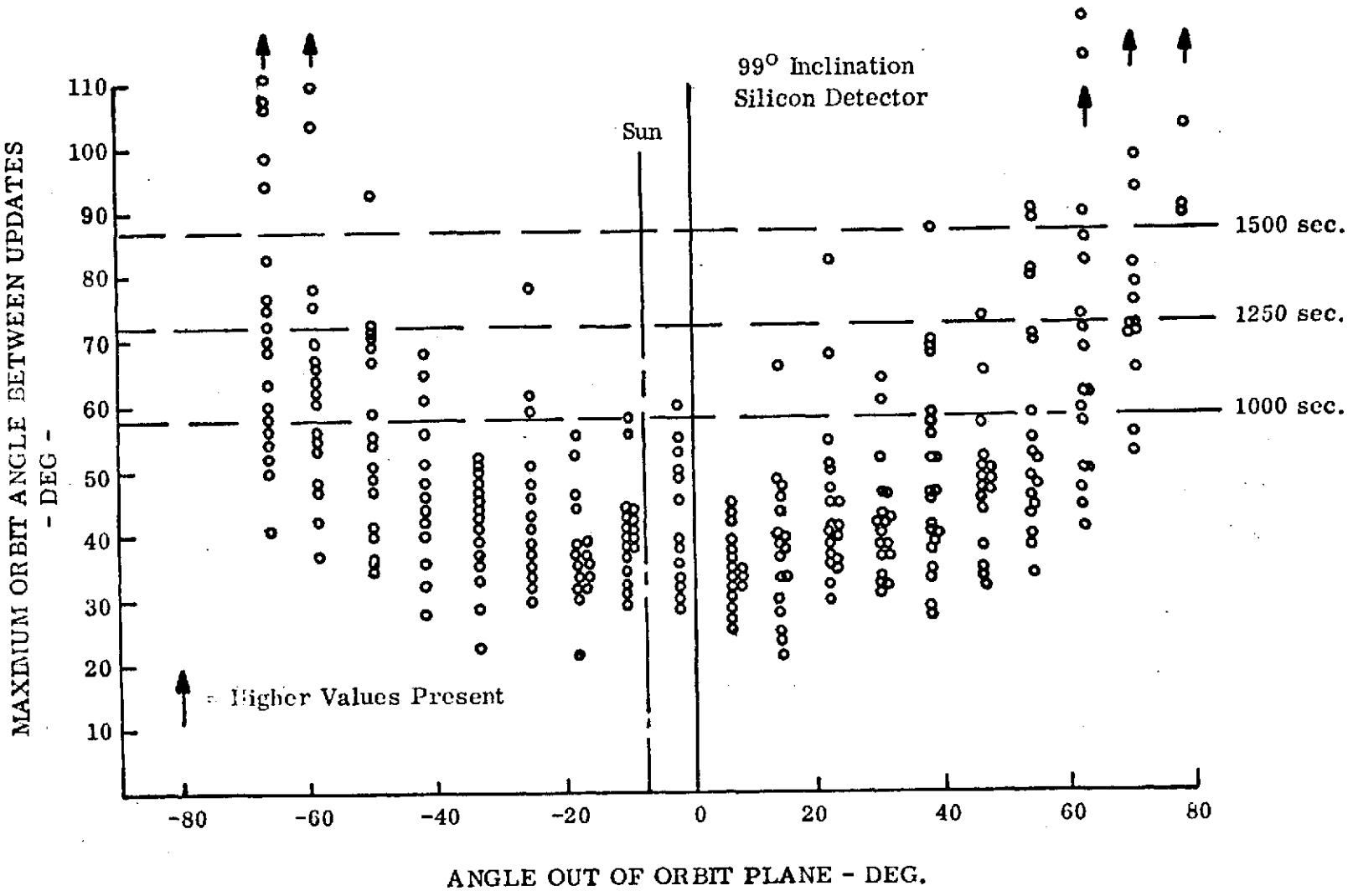

Figure 3.1-46. Effect of Star Sensor Orientation on Star Update Frequency

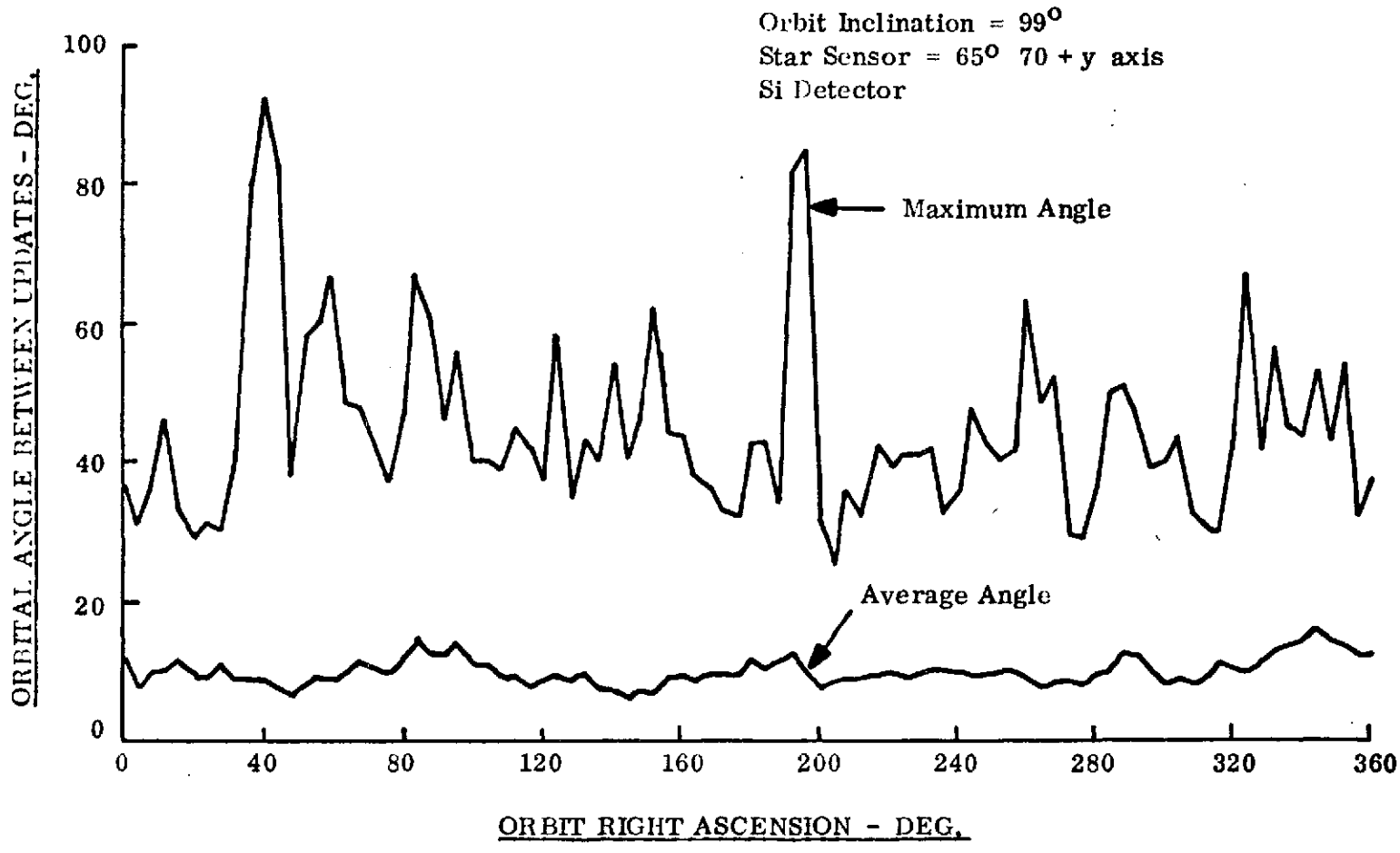

Figure 3.1-47. Star Crossing (Update) History

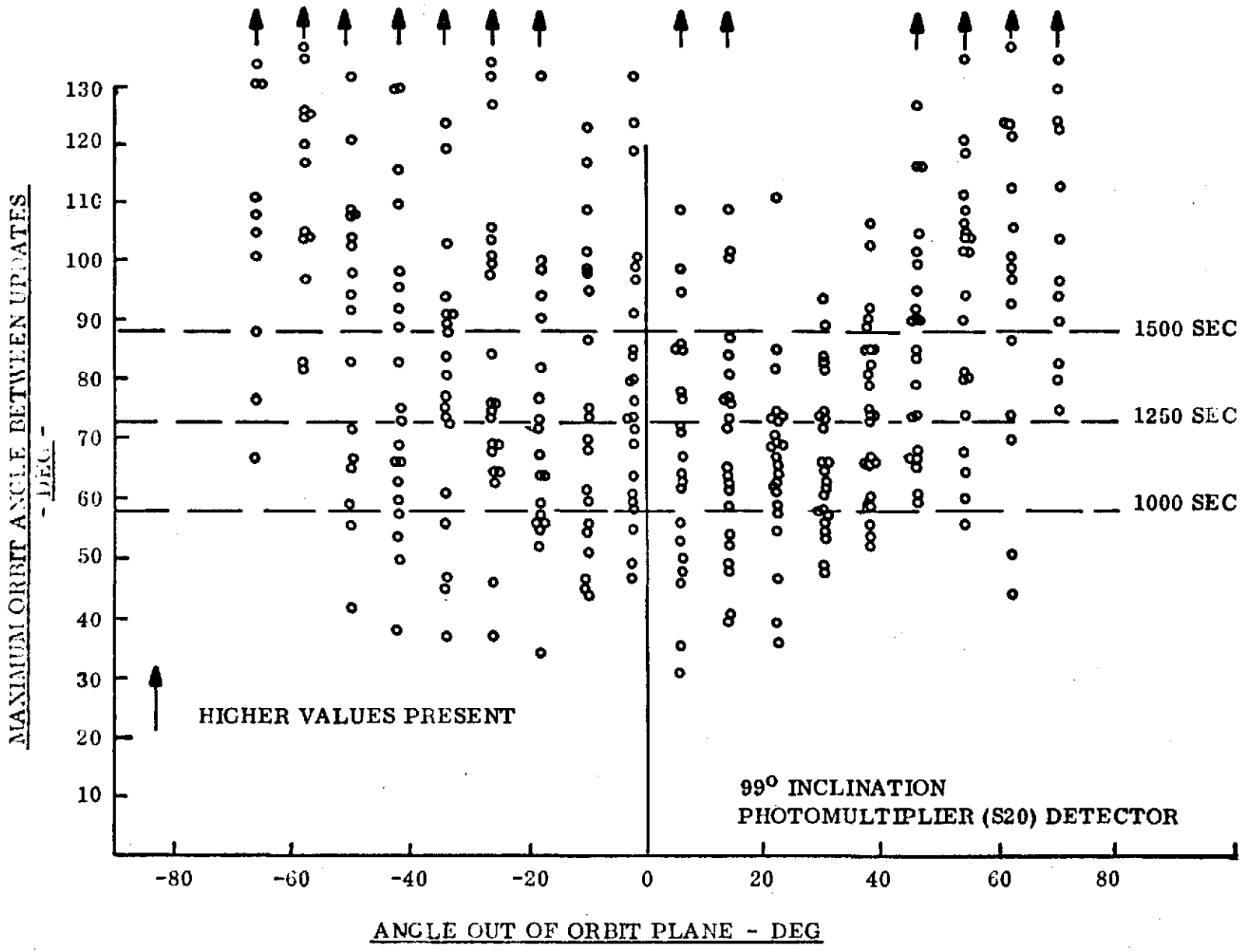

Figure 3.1-48. Effect of Star Sensor Orientation on Star Update Frequency

different from Figure 3.1-46. The average interval between star updates is greater than 60 degrees, and exhibits a wide scatter. The scatter, as well as the large angles between updates, results from the limited number of blue stars in the sky brighter than 3.65 magnitude. Figure 3.1-49, derived from the star catalog, indicates that there are more than twice as many bright "Silicon" stars as "S-20" stars. An "optimum" star sensor orientation is not readily apparent from Figure 3.1-48, so 35 degrees was selected for comparison, and the angle between star update determined as a function of orbit right ascension (Figure 3.1-50). The large values are apparent from the figure.

Based upon the silicon detector results, and the advantage with respect to sun interference, the angle of 35 degrees to the orbit plane (55 degrees to the pitch axis) was selected for both sensor types.

It is apparent from this study that a star tracker using S-20 must have a higher sensitivity (approximately one magnitude more) than one using a silicon detector. The final selction of the star tracker is discussed in Report III.

3.1.4.3.4 Simulation

Three axis digital analysis programs and simulations are the primary design and analytical tools which led to the selection of the existing design. All of these programs were executed on the Honeywell 635 computer which is a general purpose floating point computer. Since the OBC is a fixed point computer, the EOS simulations were not exact representations, and the question of the effect of fixed point arithmetic on the ACS performance arose. Fortunately, it was possible to obtain results using fixed point arithmetic from a simulation developed under an IR&D effort. The IR&D project was initiated early in the year, and was aimed at determining the interaction of an on-board computer with an Attitude Control Subsystem. The effect was directed primarily towards developing a fixed point simulation of an on-board computer which would be used to determine the effect of computer tradeoff truncation, word size, etc. on the ACS. The on-board conputer selected for modeling was the Advanced On-Board Processor developed by GSFC. This computer was chosen because of the ready availability of computer information, and because its compatibility with the SDS 930 on which the simulation was programmed.

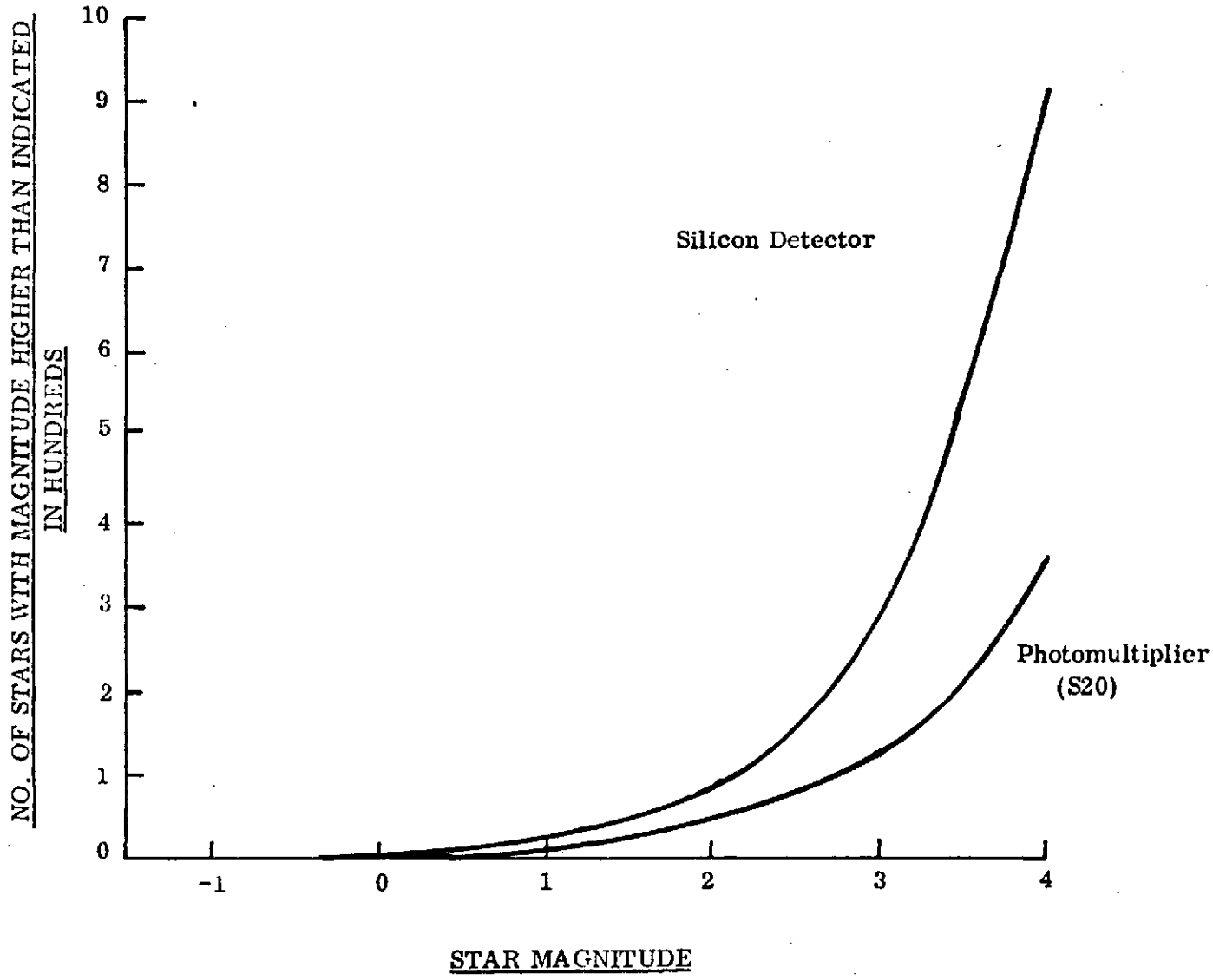

Figure 3.1-49. Number of Observable Stars for Two Detectors

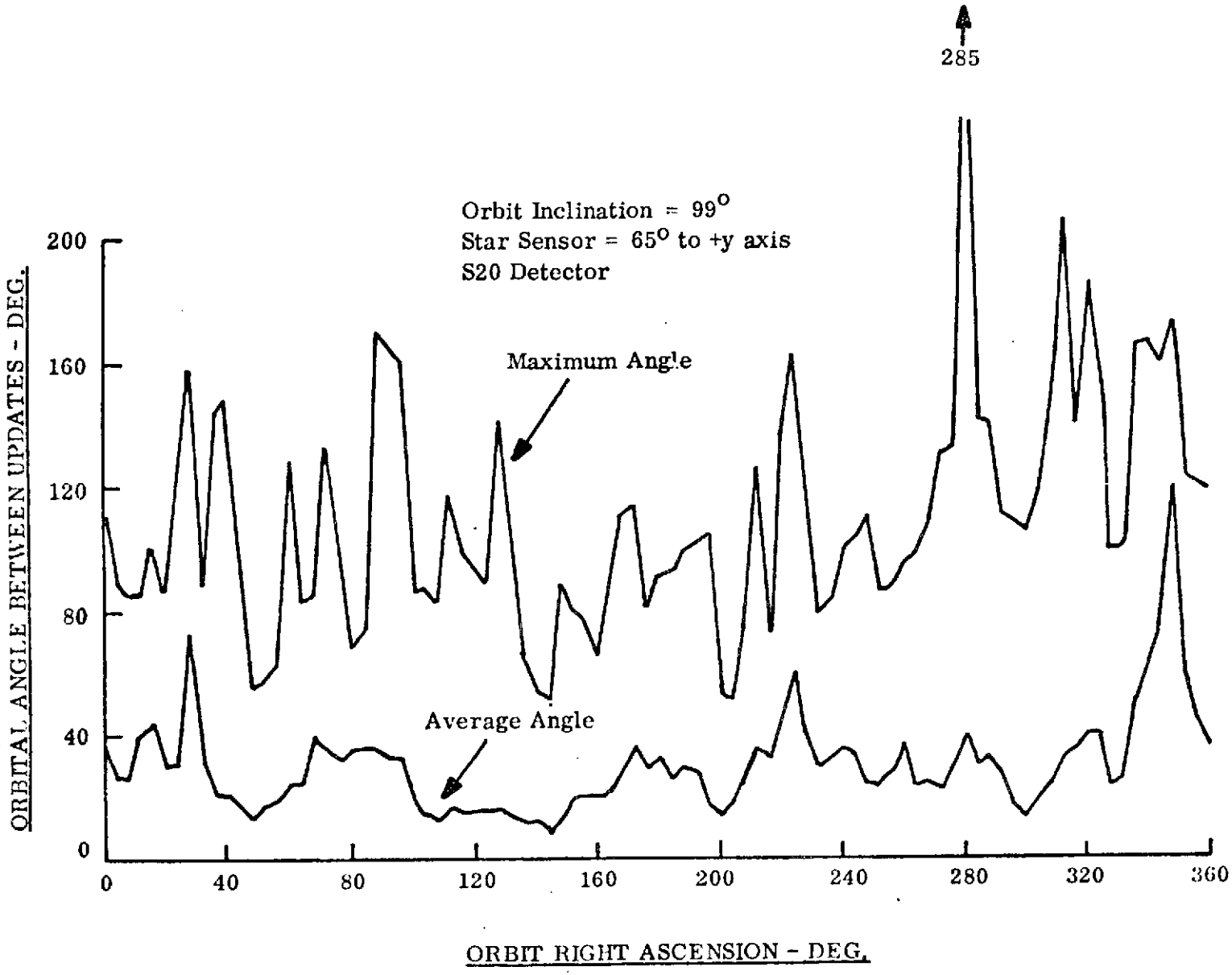

Figure 3.1-50. Star Crossing (Update) History

Figure 3.1-51 shows one axis of a three axis AOP simulation of the EOS Attitude Control Subsystem. The simulation indicates the system is overdamped and settles to steady state in approximately 20 seconds. This is in good agreement with the EOS simulation which indicated a settling time of 25 seconds. The slight difference is due to the presence of an integrator and the use of constant torque momentum wheels in the EOS-ACS, which were not modeled in the AOP simulation. The AOP simulation assumed linear troque speed wheels, which explains the presence of the 0.00160 degree offset at the end of the simulation. A significant point about the AOP simulation is the close agreement between it and the analog simulation used as a basis of comparison (Figure 3.1-52). The agreement confirmed that a digital controller is capable of providing the smooth performance normally associated with analog electronics.

3.1.4.4 Follow-On Mission Accommodations

3.1.4.4.1 Later EOS Missions

The ACS as configured is capable of accommodating any of the later EOS Missions (as currently defined) without modification. The star sensor, IRU, sun sensor, and computer provide the attitude sensing, and their performance is largely independent of spacecraft design (except for field of view). The addition of a sun shield to the star sensor (as discussed in Section 3.1.4.2.2.1) may be required depending upon the orbit characteristics (ascending node time, etc.).

The momentum wheels selected for the nominal ACS have more than adequate momentum storage capability for EOS-A, and can accommodate larger spacecraft with larger disturbances (twice as large comfortably). The capabilities of the magnetic torquers are adequate for most EOS Missions, and can be increased in strength by additional torquers of the same design, acting in parallel with the original torquers, if required.

3.1.4.4.2 Synchronous Earth Observatory Satellite

The basic ACS is directly applicable to SEOS, but the star sensor should be reoriented to form a 36 degree cone angle with the spacecraft positive pitch axis (compared to the EOS +55 degrees). Star sensor orientation studies indicate that the maximum angle between updates in this orientation is 39 degrees, representing a "drift" period of approximately 2.6 hours. The random walk characteristics of the gyro (Figure 3.1-40) indicate that an

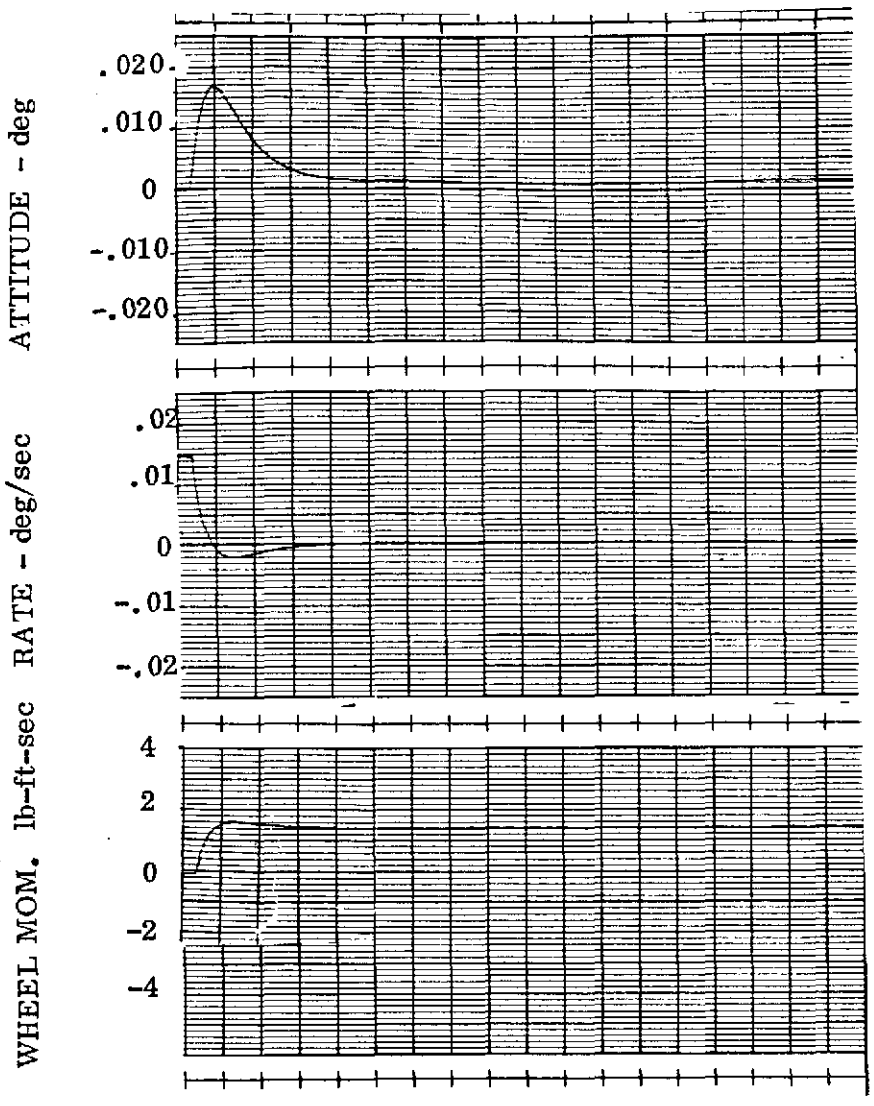

Figure 3.1-51. AOP Simulation Results

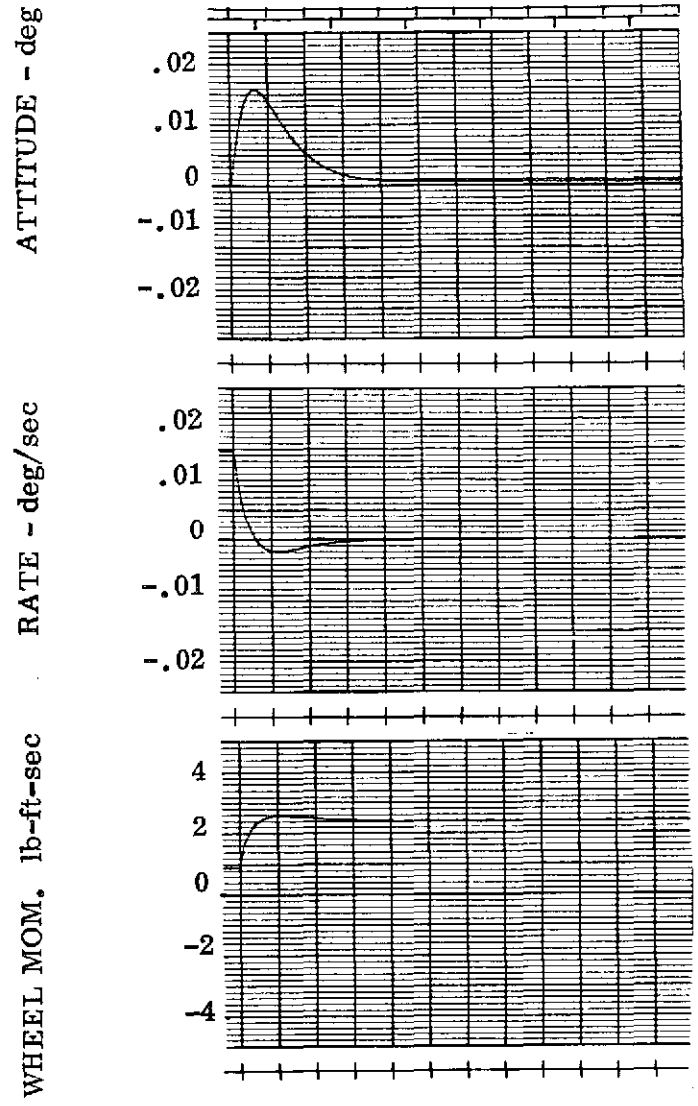

Figure 3.1-52. Analog Simulation Results

additional position uncertainty (pessimistic calculation) of 18.8 arc seconds would develop over this time span if only bright stars were used. The error can be reduced by using dimmer stars (the star sensor can detect sixth magnitude stars) to "bridge" the gaps. At the orientation selected, the star sensor will have one dim star in the field of view at all times, significantly reducing the effect of the random walk. However, the OBC software will have to be modified to permit the star sensor magnitude threshold to be stepped as a function of time orbit. This stepping is necessary to avoid star identification problems at points of high star densities where a large number of dim stars exist. Since the SEOS on-board star table is always the same, and the sun sensor will not be disabled by the sun in its selected orientation, the procedure will not change significantly with time. Covariance results have shown that the attitude performance of SEOS is comparable to that of EOS.

An additional modification for SEOS is the elimination of the magnetic torquers. The torquers are virtually useless because of the low magnetic field. Momentum unloading is accomplished by the PRCS. This can be done with the coarse PRCS and a small ACS error (14 arc seconds) or if the payload requires, a fine PRCS with no error.

3.1.4.4.3 Solar Maximum Mission

The basic ACS is directly applicable to SMM with the addition of payload sensors (precision sun sensor and flare finder) and minor modifications to the ACS software. The primary factors which affect the ACS are:

(1) Continuous solar attitude update (except in eclipse)

(2) Near inertial stabilization

(3) High slew requirement

(4) No reaction control system planned

The continuous attitude update and near inertial stabilization simplifies much of the normal ACS software, and modifies other sections. The approach taken is to update the quaternions. Acquisition would be similar to EOS acquisition, but in the normal mode the quaternions would be updated using both precision sun data and star sensor data. The star sensor would be mounted perpendicular to the sun line, and oriented perpendicular to the ecliptic (several stars are acceptable reference stars). This keeps a star in the field of view at

all times, and reduces both the size of the on-board star table and the star recognition functions. The IRU would be retained as the primary "stabilizer" and would provide the attitude reference during eclipse periods. During these periods, the on-board computer would track the sun by updating the quaternions based upon a sun position routine, or by a rate bias (1 deg/day). The continuous update is required to prevent a large error (approximately 100 arc seconds) from building up, since the spacecraft is not truly inertially stabilized, but must track the sun. The Kalman filter would be retained, but would operate from sun sensor data as well as star sensor data.

The high slew requirement poses special problems from the actuator standpoint. The slew requirements, are shown in Table 3.1-16. The torque and momentum requirements for all three requirements are shown in Table 3.1-17. The nominal ACS can perform the minimum requirement with a spacecraft of 2000 slug/ft^2 moment of inertia with no difficulty, and can perform the required maneuver (with limited margin) without modification. Growth capability can be provided by using additional AC wheels or changing to DC wheels which are capable of providing a higher torque for the same power and weight as the AC momentum wheels.

The goal slew requirements cannot be met with a practical momentum wheel design. Alternatives are a propulsion reaction subsystem (PRCS), gimballed inertias, or control moment gyros. The PRCS is a simple component, but does not lend itself to the precision control required. Gimballed inertias would require development both analytically and from the component standpoint. CMG's are capable of performing the task if the weight and power (and cost) can be tolerated. A double degree of freedom CMG is an excellent choice since only two axis maneuvering is required, and CMG's are completely compatible with quaternion maneuvers. The use of all CMG or CMG's in conjunction with momentum wheels would have to be investigated.

Irrespective of actuator type, the slew maneuver would be performed open loop to prevent excessive bandwidth requirements. The computer would calculate the new position for the spacecraft, and execute a programmed maneuver to traverse the majority of the position change. The normal ACS would correct any small error at the end of the slew. For the goal requirements, the slew will almost certainly cause structural vibrations which will

cause the payload to oscillate about the new position until the vibrations damp out by natural means. The use of jerk and jounce filters on the manuever will assist in preventing the slew from inducing large spacecraft oscillations. These filters are not required for the minimum slew, and probably not for the required slew, depending on spacecraft structural characteristics.

The elimination of the PRCS system affects only initial acquisition. Initial acquisition can be performed with wheels and magnetic torquers (or magnetic torquers alone) if the initial separation rate is low, the magnetic torque capability is high, and an allowable (several orbits minimum) tumble time can be tolerated. The use of this system would depend on the final spacecraft characteristics.

3.1.4.4.4 Seasat

The ACS is capable of performing the Seasat Mission without modification.

Table 3.1-16. Solar Maximum Mission Slew Requirements

Goal (GSFC Report)	5 arc min in 1 sec
Required	5 arc min in 10 sec
Minimum	10 arc min in 30 sec

Table 3.1-17. Slew Torque and Momentum Requirements - Solar Maximum Mission

	Torque*	Momentum*
Goal	2220 oz-in	5.8 lb-ft-sec
Required	22 oz-in	.5 lb-ft-sec
Minimum	5 oz-in	.4 lb-ft-sec

* For a 2000 slug-ft^2 spacecraft

3.1.5 POWER MODULE

The power subsystem consists of the equipment housed in the Power Module plus the mission peculiar solar array and associated shunt dissipator panel. The Power Module contains all the circuitry required to control, store, monitor, and distribute power derived from a solar array. The baseline subsystem design implementation described herein is based on the cost/performance analyses presented in Report No. 3. These analyses show that the selected regulated Direct Energy Transfer (DET) approach will result in lower total subsystem cost, when compared to the original NASA baseline, if more than two or three subsystems are procured with the same basic design.

For the reader's convenience, the performance of the entire subsystem (both the Power Module and the mission peculiar equipment) is discussed in this section. Section 3.2.7 includes only the unique requirements for the solar array and a description of the array and its associated shunt dissipator.

3.1.5.1 Requirements

The requirements for the baseline power subsystem design have been formulated in the NASA Power Module Performance Specification. These requirements have been made more restrictive, where it is appropriate, to reflect the realizable performance of the selected baseline implementation approach. For example, the original bus voltage regulation of $+28 \pm 7$ vdc has been changed to $+28 \pm 0.3$ vdc because it is readily achievable with the selected approach and results in savings in the user subsystems and experiments. Table 3.1-18 lists the requirements on the distributed bus voltage. The source impedance requirement has also been made more restrictive than specified by the NASA document.

The load power demand for the EOS-A mission is given in Table 3.1-19. The total daily experiment operating time was averaged over the number of orbits per day to yield a typical operational orbit with the operating times as given in this table. This typical operational orbit is divided into five phases to accurately account for the peak load periods which may result in load share battery discharge during the daylight portion of the orbit. The power consumption for each subsystem has been tabulated for each of

Table 3.1-18. Power Subsystem Bus Voltage Characteristics

Parameter	Value
Voltage (nominal)	+28 vdc
Regulation	±0.3 vdc (1 ampere to full load) including operating temperature and life
Ripple	≤ 100 mv peak-to-peak
Line Drop	Round trip from Power Module to using subsystem shall be ≤ 280 mv, except loads over 100 w shall be ≤500 mv.
Source Impedance	≤0.1 ohms, DC to 10 KHz
Normal Load Switching Transient	≤ ± 2 vdc with total energy ≤ 100 μ volt-sec
Power Regulator Failure Transient	All subsystems shall be capable of surviving a bus voltage transient ≤+5 vdc with a total energy ≤ 100 μ volt-sec or ≤ -10 vdc with a total energy ≤ 250 μ volt-sec
Fault Correction	All subsystems shall be capable of surviving a transient voltage drop down to 15 vdc for ≤ 100 m sec

Table 3.1-19. Load Power Demand for EOS-A Mission

	Load Power Demand (watts)					
Subsystem \ Operational Mode	Launch	Operational Average Baseload	Readout to TDRSS & LCU (6 min)	Readout to Ground Stations & LCU (3 min)	Sensor Warm-up (15 min)	Readout to LCU (3 min)
Attitude Control	91.	104.	104.	104.	104.	104.
C&DH	125.	125.	125.	125.	125.	125.
SCCM	--	84.	84.	84.	84.	84.
Reaction Control	--	20.	20.	20.	20.	20.
W/B Communications	--	--	421.	268.	--	282.
Experiments						
Data Collection Sys.	--	40.	40.	40.	40.	40.
MSS	--	--	65.	65.	--	--
Thematic Mapper	--	10.	110.	110.	110.	110.
SUBTOTAL	216.	383.	969.	816.	483.	765.
Distribution Losses	4.	8.	19.	16.	10.	15.
Power Model	15.	15.	15.	15.	15.	15.
TOTAL	235.	406.	1003.	847.	508.	795.

these five operational orbit phases in terms of the demand at the regulated 28 volt level as measured at the user subsystem terminals. The total for all using modules is given in the row labeled "Subtotal". The power consumed by the Power Module as well as the distribution losses between the Power Module and the other modules and experiments is added to this subtotal to give the total load demand on the regulated bus at the Power Module which is shown in the "Total" row of the table. This load demand along with the specified average operational duty cycle results in an orbital average load demand of 482 watts. A graphical representation of this load profile is given in Figure 3.1-53.

Orbit altitude influences the power subsystem design in two areas. First, the orbit altitude selection determines the orbit period and associated eclipse duration as shown in Figure 3.1-54. For the selected EOS-A altitude of 775km (418 nm), the orbit period is 100.2 minutes and the maximum eclipse duration is 35.3 minutes. The second area of orbit altitude dependence is related to the particle radiation environment which has a major impact on the solar array design. This is discussed in Section 3.2.7.

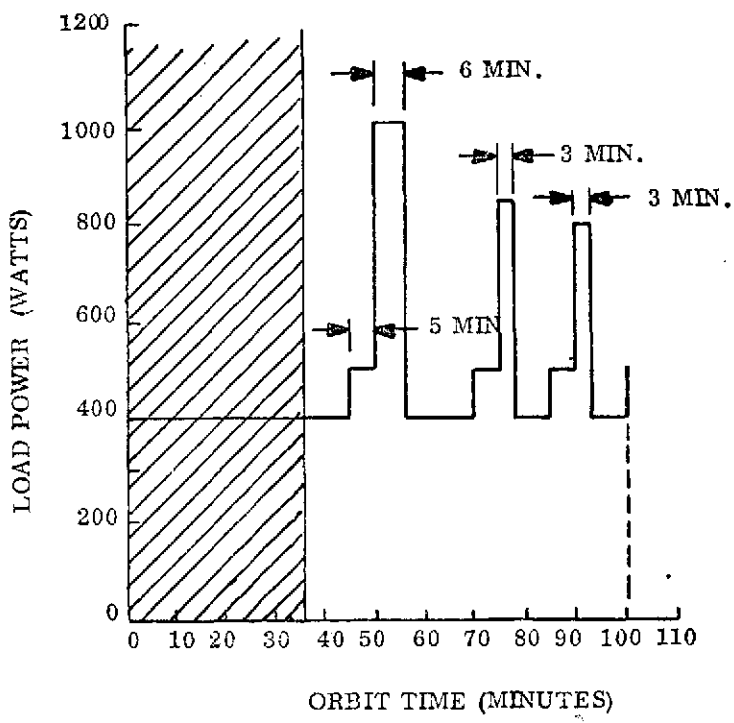

Figure 3.1-53. Load Power Profile for EOS-A

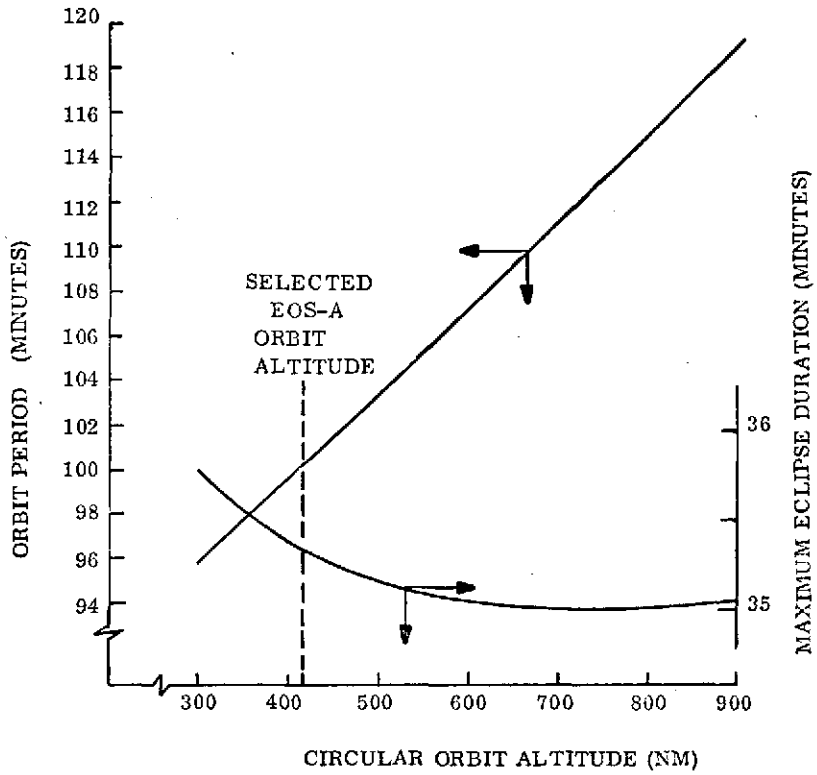

Figure 3.1-54. Orbit Period and Maximum Eclipse Duration vs. Circular Orbit Altitude

3.1.5.2 Baseline Description

3.1.5.2.1 Functional

The selected baseline power subsystem approach is a Direct Energy Transfer (DET) implementation which provides a regulated bus (+28±0.3 vdc) for distribution to the user subsystems and experiments. This approach is based on the subsystem presently being developed by GE for the Japanese Broadcast Satellite-Experimental (BSE) Program. A modular approach for the battery charge/discharge electronics is used to meet the requirement for mission flexibility. A simplified functional block diagram of the selected baseline subsystem is shown in Figure 3.1-55. The Central Control Unit senses the bus voltage level and generates a control voltage based on the detected error. This control voltage is used to control the operation of the battery discharge boost converters, battery charge controllers, and sequenced partial shunt regulator. The operations of these components is such that the load bus is automatically provided with first priority to the solar array power at all times. Battery charging has second priority, as modified by the other control inputs to the battery charge controllers, with excess solar array power automatically dissipated in the sequenced partial shunt regulator.

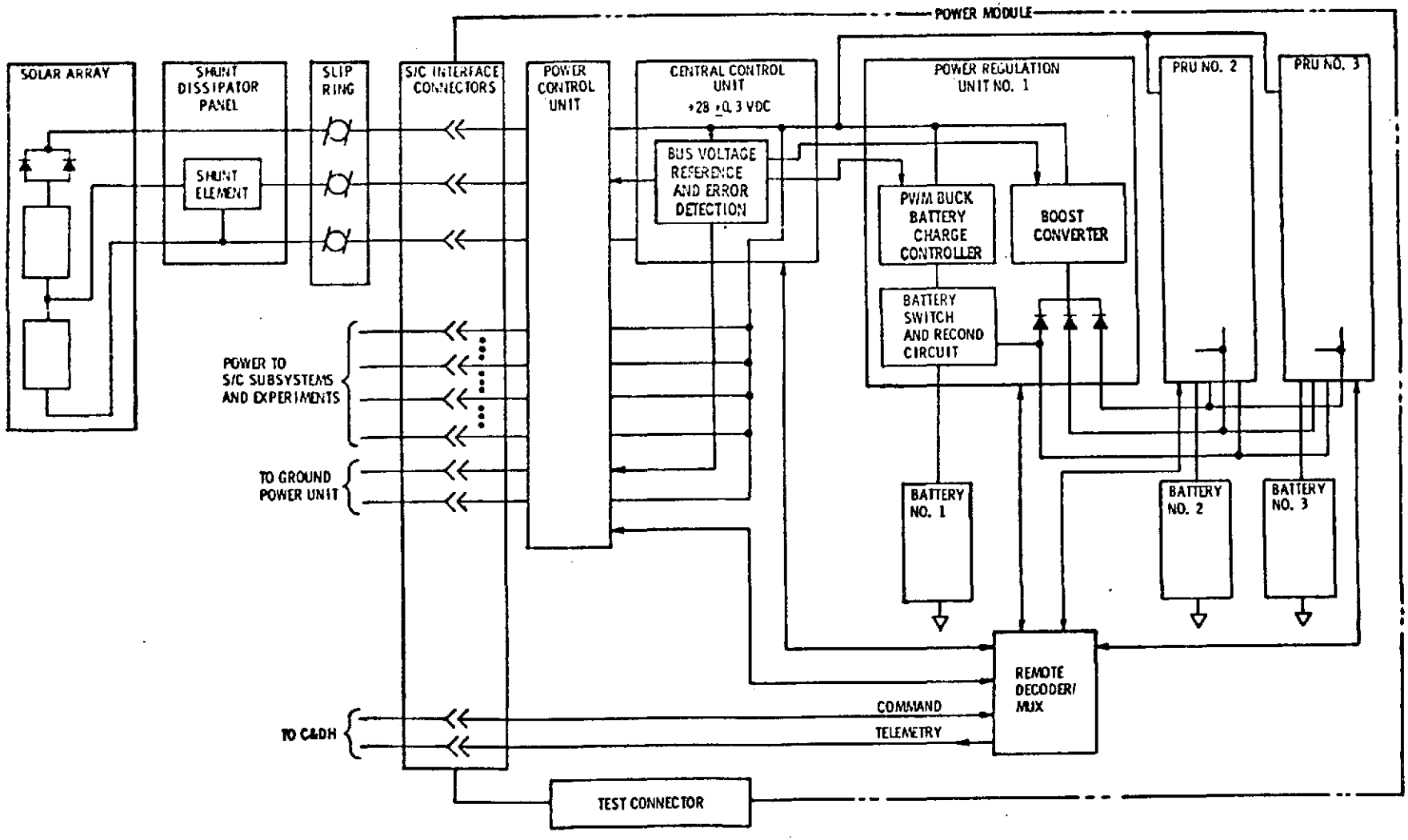

Figure 3.1-55. Simplified Functional Block Diagram of Baseline Power Subsystem

The Power Regulation Unit (PRU) contains the charge/discharge electronics which are associated with each battery. The basic spacecraft Power Module contains three PRU's, one associated with each battery. Each PRU contains a PWM buck battery charge controller, which is dedicated to one battery, and a PWM boost converter which receives discharge current from all batteries in the subsystem. An individual boost converter output rating of 450 watts has been selected for the EOS type mission. The PRU also contains the battery discharge isolation diodes, charge disable relay and battery reconditioning circuitry (if required). The PWM buck battery charge controllers provide charge current limiting and voltage limiting at one of eight ground commandable, temperature compensated levels.

The power subsystem has been designed with adequate internal redundancy to provide a high probability of achieving the two year mission design life time. Majority voting, quad redundant logic is used in the Central Control Unit to provide the necessary reliability associated with the generation of the regulation control voltage. The energy storage has been sized to enable nearly full EOS-A experiment operation with one battery failure. The failure of one boost converter will not limit the full operation of the EOS-A payload.

3.1.5.2.2 Hardware

Module Arrangement

The arrangement of components within the Power Module is shown in Figure 3.1-56. As shown in Figure 3.1-57, the basic spacecraft Power Module contains three Power Regulation Units and three batteries but the module structure has been designed to accommodate a total of five PRU's and five batteries. This allows all follow-on missions to be accommodated with the same basic module structure.

The module is designed to reject all waste heat outboard with all side and inboard surfaces covered with multi-layer insulation blankets. High power dissipation components are mounted directly to the inner face of the one inch thick aluminum honeycomb sandwich outer panel. The outer panel is integrally stiffened by keels tailored to the individual component arrangements. A subsystem harness interconnecting the components and

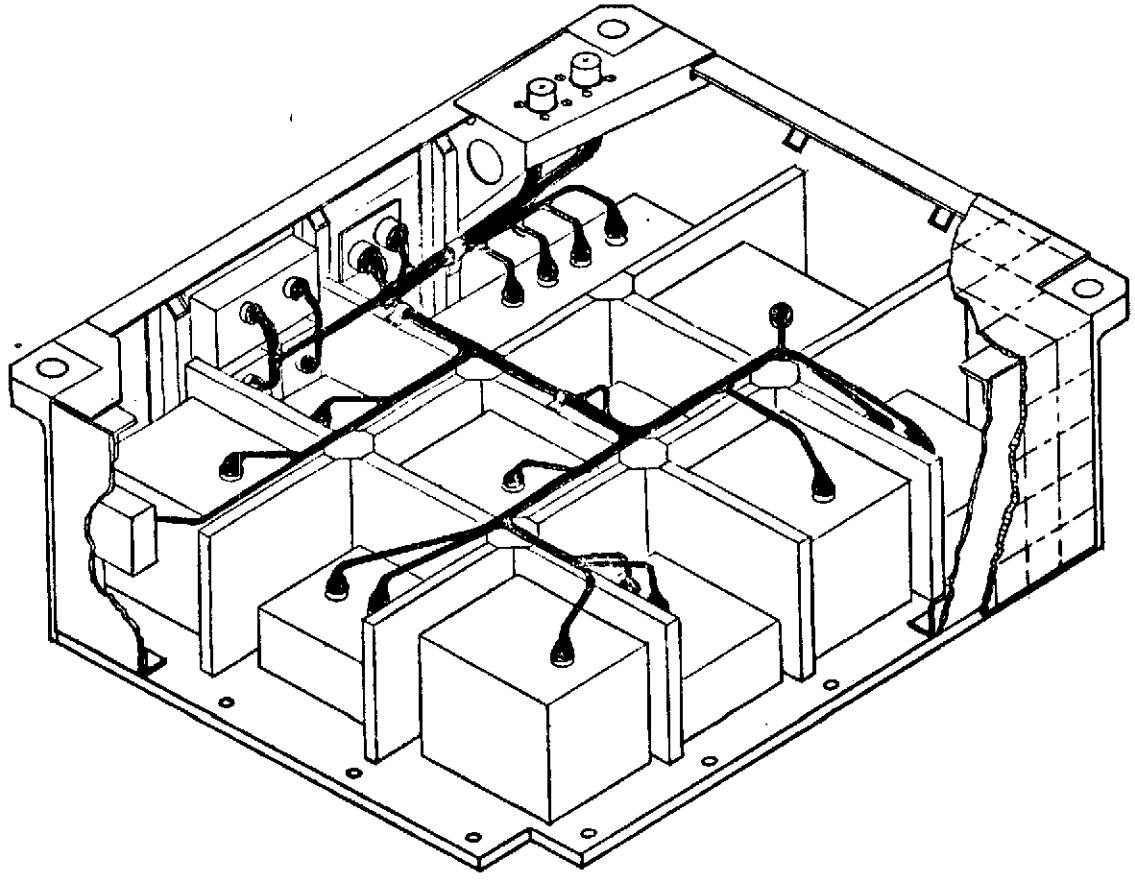

Figure 3.1-56. Power Subsystem Module

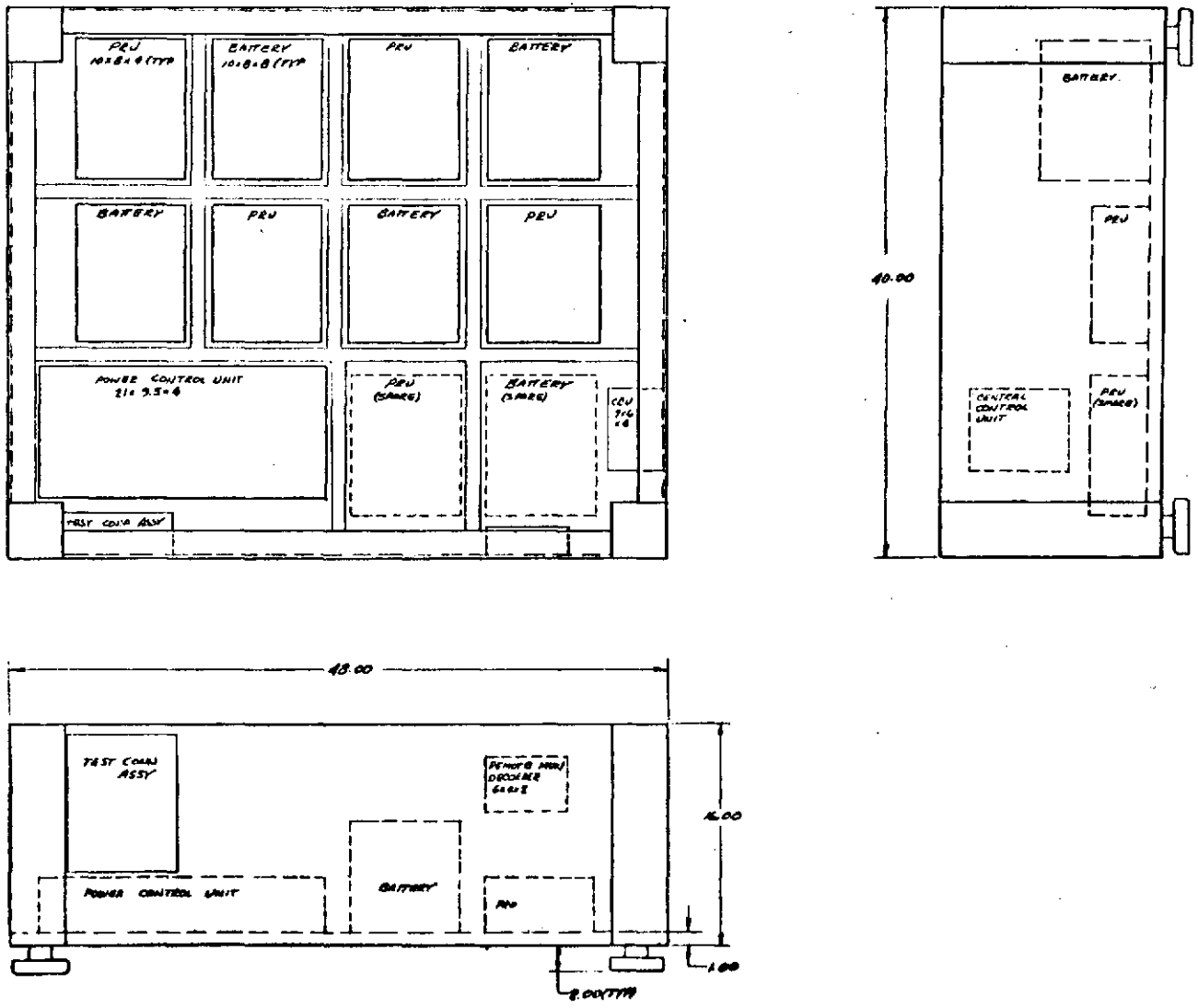

Figure 3.1-57. Power Subsystem Module Layout

interface and test connectors is designed for fabrication and installation as a unit. Once the harness is installed and clamped to the keel the module may be bench tested prior to installation of the frame structure and insulation covers. This "breadboard" subsystem assembly on the outer panel provides maximum ease of installation and replacement of components during the assembly cycle.

Once panel and harness assembly and test is completed the panel is bolted to the open box frame structure and the interface and test connectors attached to the frame brackets. Installation of the insulation blankets completes the module assembly.

Table 3.1-20 gives the size and weight breakdown for the basic spacecraft power subsystem. With the exception of the solar array assembly and shunt dissipator panel, all components are mounted within the Power Module. The shunt dissipator panel is mounted on the yoke structure of the solar array.

Table 3.1-20
Basic Spacecraft Power Subsystem Component Size and Weight Summary

Component	Quantity per Spacecraft	Unit Size L x W x H	Total Weight (lbs)
Solar Array Assembly	1	109 ft^2	83.
Shunt Dissipator Panel*	1	---	6.
Central Control Unit**	1	4 x 5 x 4 in	4.
Power Regulation Unit**	3	11 x 6 x 6 in	45.
Battery **	3	8 x 10 x 7.8 in	141.
Power Control Unit **	1	21 x 10 x 4 in	30.
Remote Decoder/Mux**	1	3 x 4 x 3 in	2.
Power Module Harness**	1 set	---	30.
Power Module Structure**	1 set	---	40.
TOTAL			381 lbs. (172.8 kg)

* Mounted on yoke of solar array assembly
** Contained within Power Module

Battery

The seventeen cell, twenty ampere hour, nickel cadmium battery design shown in Figure 3.1-58 has been selected for energy storage in the basic spacecraft Power Module. This design is similar to the battery which is currently being qualified for application on Nimbus G and ERTS C. Figure 3.1-59 is a photograph of the twenty three cell, fifteen ampere-hour development battery. This battery has been subjected to a thermal vacuum test to verify heat transfer from the cells to the thermal wall and to qualification level Nimbus G vibration.

In this battery design each nickel cadmium cell is enclosed in an aluminum retainer using Stycast 2850 as the bonding material. This material is a good electrical insulator and a good thermal conductor. The cell-retainer subassembly is designed to be an interchangeable unit which can be used in any position in this battery assembly or can be used in a similar battery design having a different number of cells. The retainers on the broad cell faces prevent bulging of these faces with a pressure differential of 50 psi between cells, and transfer heat from the broad cell faces to the edges where it is removed by conduction to the chassis.

To assure a good thermal interface between the cells and the chassis the cells are wedged against the chassis base plate and one side well. (The chassis base plate and side walls are one piece.) This provides heat transfer from two edges of the cells rather than a single edge as is common, and provides a very uniform cell temperature and a low temperature gradient between the cells and the base plate. On continuous overcharge in vacuum the Nimbus G battery maintained a maximum gradient of 2.5^{o}C between the highest cell temperature and the radiating wall. For EOS by using the chassis base plate as the heat transfer wall rather than a side wall as required on Nimbus the maximum gradient between the highest cell temperature and the heat transfer surface is expected to be 1.5^{o}C.

During battery assembly the two cell stacks are preloaded at 80 psi by adjusting the shim thickness at the end of each stack. This preload and the wedges assure that there is no

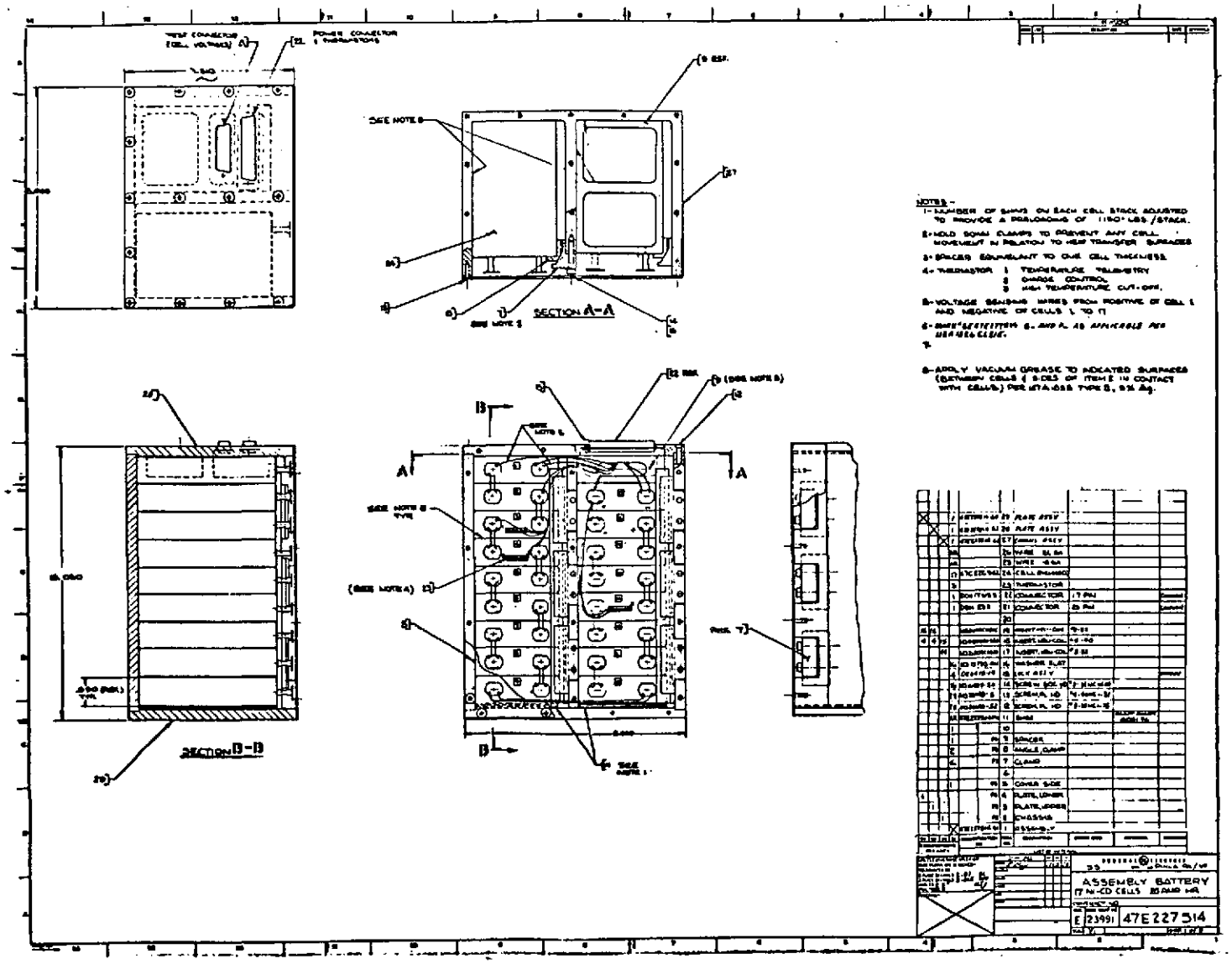

Figure 3.1-58. Nickel-Cadmium Battery Assembly for EOS (17 cell, 20 ampere-hours)

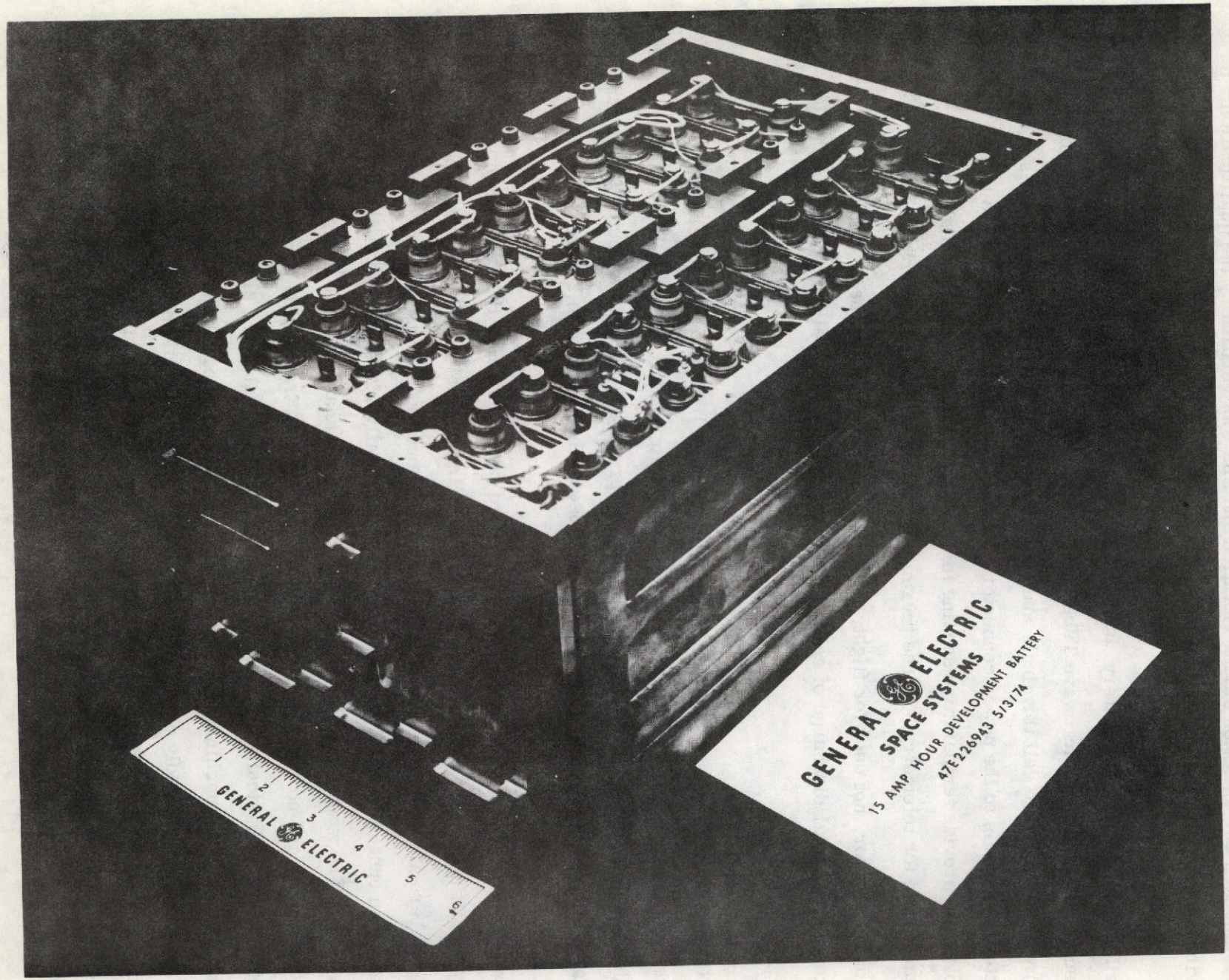

Figure 3.1-59. Nimbus-G Development Battery

cell movement in any direction during vibration and this was verified by the qualification level vibration of the development battery.

The cells to be used are GE Battery Business Dept. 42B020AB cells, with two ceramic seals supplied by the GE Microwave Tube Dept. Nickel terminals (not on development model) will be brazed to cell terminals and redundant wiring will interconnect cells and the battery terminals to the power connector. Three thermistors are bonded to three cell covers to provide temperature sensing for battery charge control, for high temperature cutoff, and for telemetry. These thermistors are wired to the power connector. A second connector, not used for flight, is provided for monitoring the individual cell voltages and for total discharge of cells through thermistors for cell reconditioning prior to launch.

The EOS battery will be charged with a maximum current limit and with a selectable voltage-temperature limit. The exact voltage-temperature limit curves will not be set until the nickel cadmium cells for the batteries are procured, but it is expected the eight selectable voltage-temperature curves will be close to those shown in Figure 3.1-60.

Work with the Nimbus development battery provided some insight to the relationship of battery weight and cost. Figure 3.1-61 is an approximate relationship, although the dollar numbers are changing rapidly in our present economy. It was concluded that a reasonable amount of weight control is justified, especially since more than one battery will be used. The weight reductions considered here are changes in the design of the battery assembly and no changes in the cell design. In the straight line portion of the curve the weight is basically a matter of machining away metal in the aluminum chassis and end plates. This machining can, however, become complicated and expensive. Costs increase more rapidly when magnesium is substituted for aluminum, when beryllium is substituted for aluminum in cell retainers, and when titanium hardware is substituted for stainless steel. The sophisticated machining and the use of magnesium, beryllium and titanium are not contemplated in the EOS battery design.

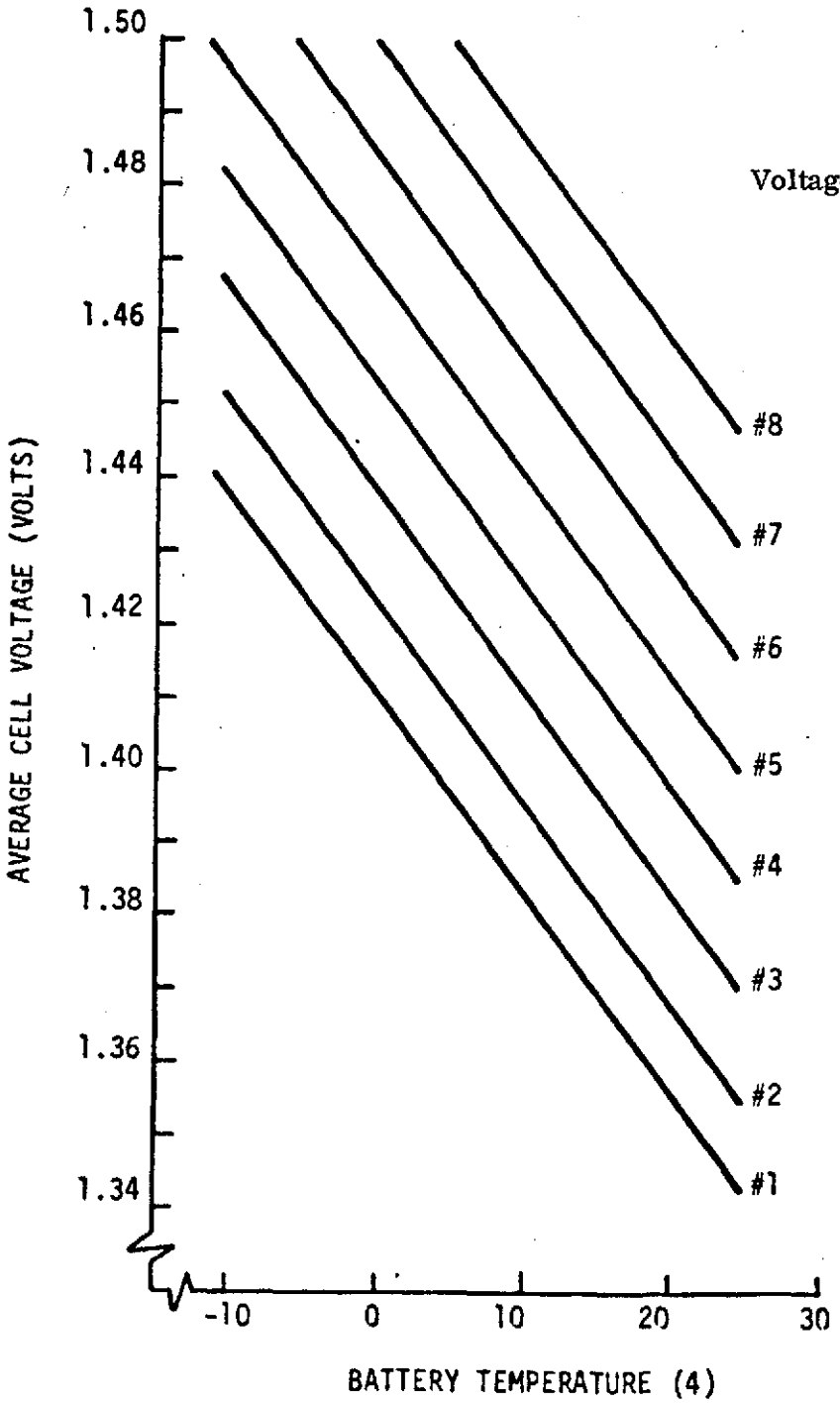

Figure 3.1-60. Power Subsystem Battery Design

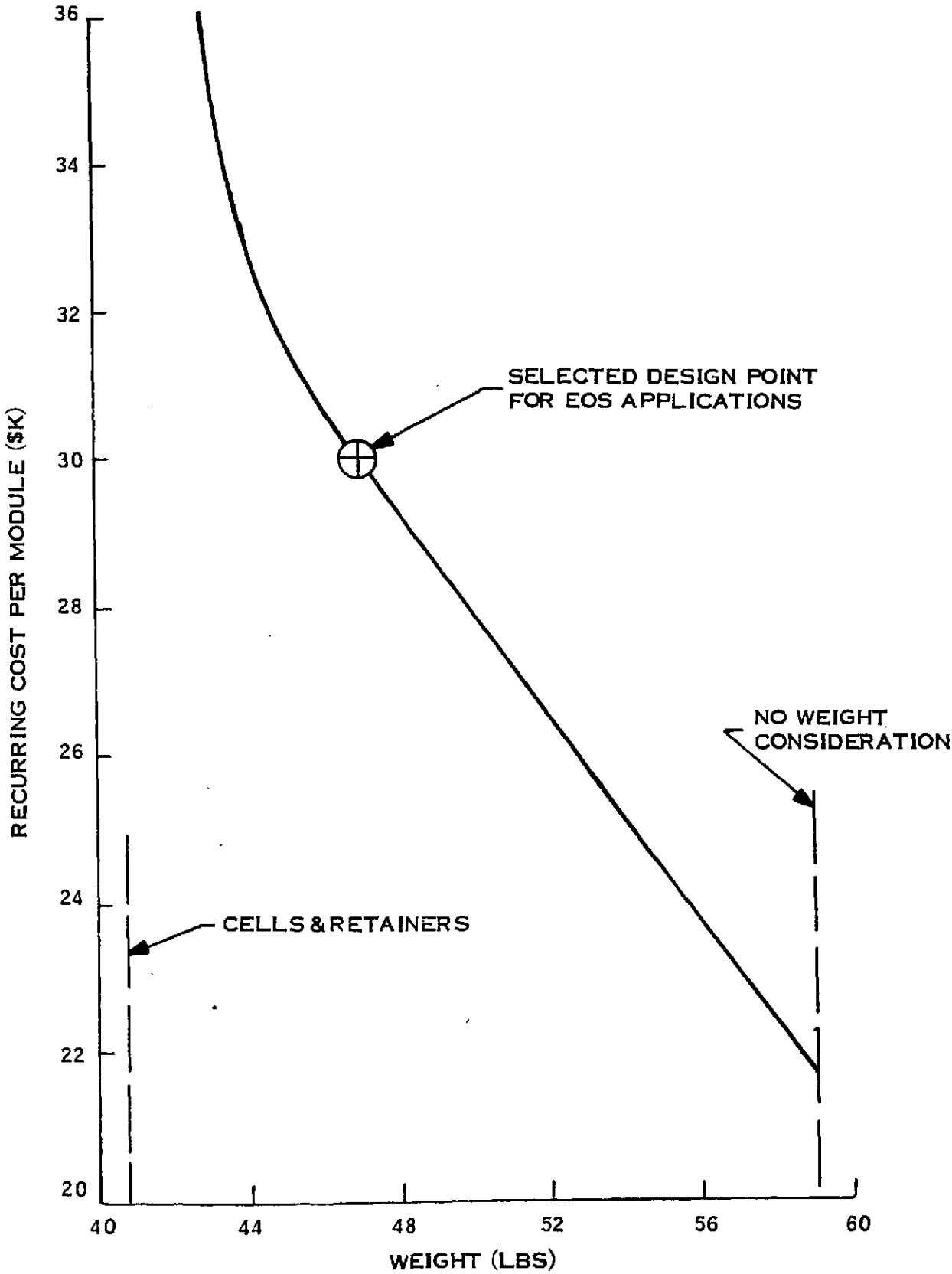

Figure 3.1-61. Cost vs. Weight for a 17 Cell, 20 A-H Nickel Cadmium Battery

The baseline battery design makes use of a nickel cadmium cell that is being considered as a standard building block in the NASA Low Cost Battery and Standardization Program. Also, the 17 cell battery assembly is one of the battery sizes that is being considered as a standard. It appears that the EOS battery design can be a candidate for the standard 17 cell 20 ampere hour battery.

Power Regulation Unit

Each Power Regulation Unit (PRU) provides the following functions:

a. A PWM boost converter discharge control which regulates the main bus voltage during periods of battery discharge.

b. Circuit protection such that an overcurrent fault within any boost converter will be cleared automatically.

c. Isolation such that any battery low voltage condition will not affect the capability of the remaining battery or batteries to deliver their full capacity to the boost converters.

d. A PWM buck battery charge controller (BCC) which supplies and controls the charging of the associated battery as a function of battery temperature, battery charge current, battery voltage, and a signal from the Central Control Unit.

e. Battery reconditioning and switching.

A functional schematic of the PRU is shown in Figure 3.1-62.

The PRU is sized to match the requirements of its associated battery. An individual boost converter steady-state output power rating of 450 watts has been selected based on the present knowledge of the peak load requirements for EOS-A and for the SAR mission which is potentially the most demanding in terms of peak load. The selected boost converter power rating will permit full EOS-A experiment operation in the event of the failure of any one boost converter. For the SAR mission, such a single boost converter failure will cause the restriction of SAR operation to the daylight portion of the orbit. The boost converter will be designed to have its peak efficiency at about 159 watts of output power. Under this load condition the efficiency goal is 92 percent with a decrease to about 88 percent as the output power is increased to the maximum rating of 450 watts.

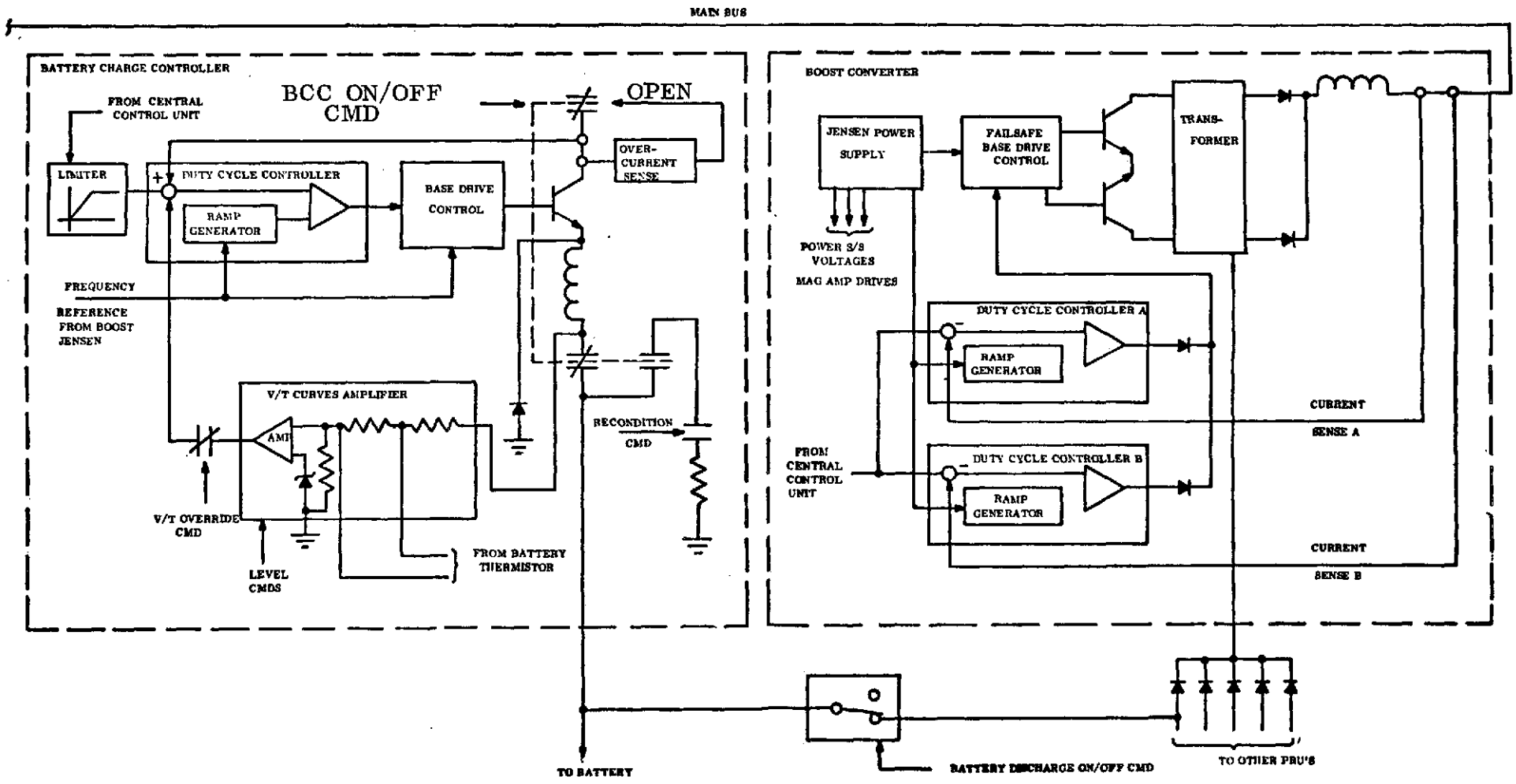

Figure 3.1-62. Functional Schematic of Power Regulation Unit

The PWM buck Battery Charge Controller (BCC) will provide a current limited charge rate of 7 amperes. Temperature compensated voltage limit control is also maintained on one of eight built-in relationships which are selectable by ground command. The BCC reduces the charge current to limit the battery voltage in accordance with the selected curve. Charge current will also be reduced linearly in response to an inhibit driver signal from the Central Control Unit. Charge current will be completely interrupted if the battery temperature exceeds 35°C.

Central Control Unit

The Central Control Unit (CCU) provides driver signals proportional to the bus voltage deviation from a 28 volt reference level for operating the solar array sequenced partial shunt regulator, the battery charge controllers, the battery discharge boost converters, and the ground power supply. Figure 3.1-63 shows a simplified functional schematic of the CCU. The driver circuitry is designed to operate from two to five sets of charge/discharge electronics, up to 70 amperes of total solar array short-circuit current, varying the output of a 70 ampere, 28 volt ground power supply. Majority voting quad redundant control circuitry is provided to assure that no single piece part failure will result in loss of function.

Power Control Unit

The Power Control Unit (PCU) contains the power control switches, circuit protection devices and other miscellaneous circuitry which perform the following functions within the power subsystem:

a. Receive power from the solar array; transfer power to and receive power from each PRU/battery set; distribute power through ten separate circuits to the user loads; and receive power from ground or shuttle power sources.
b. Provide fault protection for the ten separate load distribution circuits. This protection will be implemented using command resettable circuit breakers with selectable trip ratings up to 15 amperes.
c. Provide power control switches for eight of the ten power distribution circuits. These switches are the latching type with remote command ON/OFF inputs.

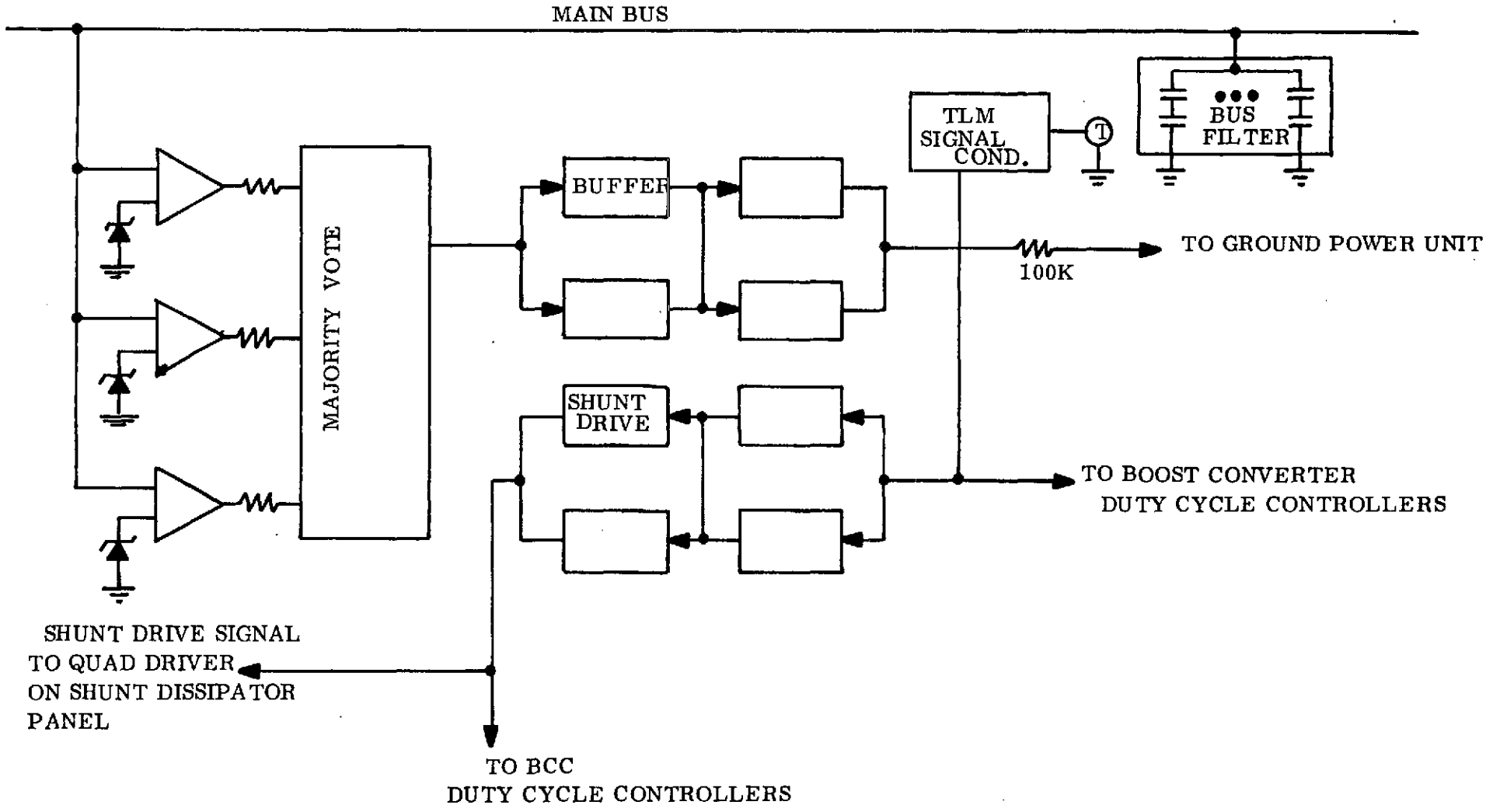

Figure 3.1-63. Functional Schematic of Central Control Unit

d. Provide a solar array power isolation switch and a main bus power isolation switch, which is ahead of the ten distribution circuits. These two switches are hardwire actuated from the ground or shuttle through the spacecraft umbilical. Switch actuation power will be supplied from the +28 volt ground or shuttle power source.

3.1.5.2.3 Interfaces

Command

Command Inputs from the C&DH subsystem are received by the Remote Decoder/Mux (RDM) which is housed within the Power Module. The decoded commands will be routed to their proper destinations within the Power Module as indicated for each function listed in Table 3.1-21. Two contact pin pairs are provided in a S/C interface connector for receiving command inputs from the "partyline" data bus.

Telemetry

Telemetry outputs from the power subsystem are routed to the RDM. Table 3.1-22 lists the telemetry data requirements for the power subsystem. Two contact pin pairs are provided in a S/C interface connector for connection to the "partyline" data bus system.

Ground/Shuttle Power

Provisions have been made in the S/C interface connector for receiving power and signal through the spacecraft umbilical connector during ground operations or shuttle retrieval operations. The ground power supplied through the umbilical will be regulated to 28 volts $\pm$ 1 percent by the feedback of the Central Control voltage to the ground power unit. Assuming the use of a constant current shunt regulated ground power supply rated at 20 amperes, the shunt regulator will vary linearly from full-off to full-on operation corresponding to a Central Control feedback signal which varies from 15 to 25 volts. This feedback will have a source impedance of 100 K ohms.

Table 3.1-21. Command List for the Baseline Power Subsystem

Command Function	Destination
BCC No. 1 ON/OFF	PRU No. 1
BCC No. 2 ON/OFF	PRU No. 2
BCC No. 3 ON/OFF	PRU No. 3
Battery No. 1 Discharge ON/OFF	PRU No. 1
Battery No. 2 Discharge ON/OFF	PRU No. 2
Battery No. 3 Discharge ON/OFF	PRU No. 3
Battery No. 1 Reconditioning ON/OFF	PRU No. 1
Battery No. 2 Reconditioning ON/OFF	PRU No. 2
Battery No. 3 Reconditioning ON/OFF	PRU No. 3
BCC No. 1 V/T Curve Bit 1	PRU No. 1
BCC No. 1 V/T Curve Bit 2	PRU No. 1
BCC No. 1 V/T Curve Bit 3	PRU No. 1
BCC No. 1 V/T Curve Bit Reset	PRU No. 1
BCC No. 2 V/T Curve Bit 1	PRU No. 2
BCC No. 2 V/T Curve Bit 2	PRU No. 2
BCC No. 2 V/T Curve Bit 3	PRU No. 2
BCC No. 2 V/T Curve Bit Reset	PRU No. 2
BCC No. 3 V/T Curve Bit 1	PRU No. 3
BCC No. 3 V/T Curve Bit 2	PRU No. 3
BCC No. 3 V/T Curve Bit 3	PRU No. 3
BCC No. 3 V/T Curve Bit Reset	PRU No. 3
BCC No. 1 V/T Override ON/OFF	PRU No. 1
BCC No. 2 V/T Override ON/OFF	PRU No. 2
BCC No. 3 V/T Override ON/OFF	PRU No. 3
Load No. 1 ON/OFF	PCU
Load No. 2 ON/OFF	PCU
Load No. 3 ON/OFF	PCU
Load No. 4 ON/OFF	PCU
Load No. 5 ON/OFF	PCU
Load No. 6 ON/OFF	PCU
Load No. 7 ON/OFF	PCU
Load No. 8 ON/OFF	PCU

Test Interface

A test connector is mounted on an accessible external surface of the module and provides the interface point for electrical ground support equipment to verify all redundancy features through 15 inhibit lines as specified in Table 3.1-23.

Table 3.1-22. Telemetry List for Baseline Power Subsystem

FUNCTION NAME	Analog or Digital	Sample Rate (S/sec)	Origin of Signal
Battery No. 1 Charge Current	A	1/16	PRU No. 1
Battery No. 1 Discharge Current	A		PRU No. 1
Battery No. 2 Charge Current	A		PRU No. 2
Battery No. 2 Discharge Current	A		PRU No. 2
Battery No. 3 Charge Current	A		PRU No. 3
Battery No. 3 Discharge Current	A		PRU No. 3
Solar Array Current	A	1/16	PCU
Total Load Current	A	1/1	PCU
Main Bus Voltage	A	1/1	PCU
Battery No. 1 Voltage	A	1/16	PRU No. 1
Battery No. 2 Voltage	A		PRU No. 2
Battery No. 3 Voltage	A		PRU No. 3
Central Control Voltage	A		CCU
Solar Array Temperature	A		PCU
Battery No. 1 Temperature	A		PRU No. 1
Battery No. 2 Temperature	A		PRU No. 2
Battery No. 3 Temperature	A		PRU No. 3
BCC No. 1 On/Off Status	D		PRU No. 1
BCC No. 2 On/Off Status	D		PRU No. 2
BCC No. 3 On/Off Status	D		PRU No. 3
BCC No. 1 Bit 1 Status	D		PRU No. 1
BCC No. 1 Bit 2 Status	D		PRU No. 1
BCC No. 1 Bit 3 Status	D		PRU No. 1
BBC No. 2 Bit 1 Status	D		PRU No. 2
BCC No. 2 Bit 2 Status	D		PRU No. 2
BCC No. 2 Bit 3 Status	D		PRU No. 2
BCC No. 3 Bit 1 Status	D		PRU No. 3
BCC No. 3 Bit 2 Status	D		PRU No. 3
BCC No. 3 Bit 3 Status	D		PRU No. 3
Battery No. 1 Reconditioning Status	D		PRU No. 1
Battery No. 2 Reconditioning Status	D		PRU No. 2
Battery No. 3 Reconditioning Status	D		PRU No. 3
Solar Array Shunt Current	A		PCU
Battery No. 1 Discharge On/Off Status	D		PRU No. 1
Battery No. 2 Discharge On/Off Status	D		PRU No. 2
Battery No. 3 Discharge On/Off Status	D		PRU No. 3
BCC No. 1 V/T Override Status	D		PRU No. 1
BCC No. 2 V/T Override Status	D		PRU No. 2
BCC No. 3 V/T Override Status	D		PRU No. 3
All Hinge Latches Locked Status	D		PCU
Deploy/Retract Actuator Temp.	A		PCU
Solar Array Stowed Status	D		PCU
Load No. 1 On/Off Status	D		PCU
Load No. 2 On/Off Status	D		PCU
Load No. 3 On/Off Status	D		PCU
Load No. 4 On/Off Status	D		PCU
Load No. 5 On/Off Status	D		PCU
Load No. 6 On/Off Status	D		PCU
Load No. 7 On/Off Status	D		PCU
Load No. 8 On/Off Status	D	1/16	PCU

Table 3.1-23. Circuit Inhibits for Redundancy Verification

Central Control Unit Circuit Name	Type of Redundancy	Number of Inhibits Required
Shunt Driver	Quad	4
Reference Error & Compensation	Majority Vote	3
BCC Driver	Quad	4
Boost Converter Driver	Quad	4
TOTAL		15

3.1.5.3 Subsystem Performance with EOS-A Load Demand

A digital simulation of the baseline subsystem was used to analyze its performance for the EOS-A load power demand profile given in Table 3.1-19. This program permits a relatively accurate simulation of the actual operation of the power subsystem under a given set of load conditions. The program calculates, on an incremental time basis, the instantaneous subsystem operating point with associated subsystem voltages and currents. The determination of the subsystem is based on the interaction of component I-V curves including the solar array, battery and power control and regulation equipment. A running accumulation of battery charge and discharge ampere-minutes is maintained and the battery instantaneous state-of-charge (SOC) is adjusted accordingly. During charge, a model for instantaneous charge efficiency which is a function of a charge rate, SOC and battery temperature is used to modify the SOC. Battery charge voltage is treated as a function of charge rate, SOC, temperature, and SOC at the start of charging. Discharge voltage is a function of discharge rate, SOC and temperature. Power regulation and control equipment is modeled based on established relationships which describe input/output parameters.

The simulation program output is given in Table 3.1-24 for the predicted end-of-mission (EOM) conditions at the aphelion solar intensity. This tabulation includes a print-out of the subsystem status for every 2 minutes of orbit time except when there is a load change or night-to-day transition. At these events the calculation interval automatically changes to accurately account for these step changes in load. The column headings in the table are self explanatory except possibly for "A-M CHG", which is the accumulative

Table 3.1-24. Orbital Simulation of Basic Spacecraft Power Subsystem for EOS-A Mission

Conditions

- o EOM (2 years), Aphelion
- o 3 Batteries on-line
- o 15°C Battery temperature
- o BVLS Curve No. 6
- o EOS-A Load Profile (see Table 3.1-19)

TIME	I ARRAY	LOAD PWR	V BATT	A-M CHG	A-M DISCHG	SOC	I BATT	EXCESS PWR	BOOST LOSS	TOTAL LOSS
0.	0.	406.	23.16	0.	0.	0.980	-20.13	-0.0	45.6	59.6
2.0	0.	406.	23.16	0.	40.2	0.968	-20.11	-0.0	45.6	59.6
4.0	0.	406.	22.91	0.	80.6	0.955	-20.33	-0.1	45.7	59.9
6.0	0.	406.	22.75	0.	121.5	0.943	-20.48	-0.0	45.8	60.0
8.0	0.	406.	22.60	0.	162.6	0.930	-20.62	-0.0	45.8	60.1
10.0	0.	406.	22.47	0.	203.9	0.917	-20.75	-0.1	45.9	60.3
12.0	0.	406.	22.34	0.	245.6	0.904	-20.88	-0.1	46.0	60.4
14.0	0.	406.	22.20	0.	287.4	0.891	-21.01	-0.1	46.0	60.5
16.0	0.	406.	22.11	0.	329.6	0.878	-21.10	-0.0	46.1	60.6
18.0	0.	406.	22.03	0.	371.8	0.865	-21.18	-0.0	46.1	60.7
20.0	0.	406.	21.96	0.	414.3	0.852	-21.26	-0.0	46.2	60.8
22.0	0.	406.	21.88	0.	456.9	0.839	-21.34	-0.0	46.2	60.9
24.0	0.	406.	21.80	0.	499.6	0.826	-21.42	-0.0	46.3	60.9
26.0	0.	406.	21.72	0.	542.5	0.813	-21.50	-0.0	46.3	61.0
28.0	0.	406.	21.65	0.	585.6	0.799	-21.58	-0.0	46.3	61.1
30.0	0.	406.	21.57	0.	628.9	0.786	-21.66	-0.1	46.4	61.2
32.0	0.	406.	21.52	0.	672.2	0.773	-21.71	-0.0	46.4	61.2
34.0	0.	406.	21.46	0.	715.7	0.759	-21.77	-0.0	46.5	61.3
35.3	0.	406.	21.41	0.	744.0	0.750	-21.83	-0.0	46.5	61.4
35.3	30.43	406.	22.26	0.0	744.0	0.750	16.94	0.0	19.3	69.0
36.0	30.63	406.	22.26	11.9	744.0	0.754	17.15	0.0	19.3	69.8
38.0	31.13	406.	22.31	46.7	744.0	0.765	17.66	0.0	19.3	71.9
40.0	31.58	406.	22.46	82.4	744.0	0.775	18.03	0.0	19.3	73.4
42.0	31.98	406.	22.61	118.6	744.0	0.787	18.35	0.0	19.3	74.8
44.0	32.32	406.	22.76	155.7	744.0	0.798	18.59	0.0	19.3	75.8
45.0	32.43	406.	22.91	174.3	744.0	0.803	18.60	0.0	19.3	75.9
45.0	32.43	508.	22.96	174.3	744.0	0.803	14.77	0.0	19.3	61.0
46.0	32.55	508.	22.97	189.2	744.0	0.808	14.89	0.0	19.3	61.4
48.0	32.76	508.	23.03	219.1	744.0	0.817	15.08	0.0	19.3	62.1
50.0	32.96	508.	23.15	249.4	744.0	0.826	15.21	0.0	19.3	62.6
50.0	32.96	1003.	22.05	249.4	744.0	0.826	-5.20	-0.0	28.2	34.4
52.0	33.09	1003.	22.05	249.4	754.3	0.823	-5.02	-0.0	28.0	34.2
54.0	33.14	1003.	22.04	249.4	764.2	0.820	-4.95	-0.1	28.0	34.1
56.0	33.16	1003.	22.02	249.4	774.1	0.817	-4.94	-0.0	28.0	34.1
56.0	33.16	406.	22.56	249.4	774.1	0.817	19.60	0.0	19.3	80.1
58.0	33.11	406.	22.56	288.6	774.1	0.829	19.55	0.0	19.3	79.9
60.0	32.99	406.	22.77	327.4	774.1	0.841	19.28	0.0	19.3	78.8
62.0	32.88	406.	22.98	365.7	774.1	0.852	19.01	0.0	19.3	77.7
64.0	32.71	406.	23.18	403.4	774.1	0.864	18.70	0.0	19.3	76.4
66.0	32.50	406.	23.38	440.5	774.1	0.875	18.35	0.0	19.3	75.0
68.0	32.26	406.	23.58	476.8	774.1	0.886	17.97	0.0	19.3	73.4
70.0	32.11	406.	23.77	512.5	774.1	0.897	17.71	0.0	19.3	72.4
70.0	32.11	508.	23.90	512.5	774.1	0.897	13.93	0.0	19.3	58.3
72.0	31.96	508.	23.89	540.2	774.1	0.905	13.77	0.0	19.3	57.7
74.0	31.79	508.	24.03	567.5	774.1	0.913	13.53	0.0	19.3	56.9
75.0	31.70	508.	24.16	580.9	774.1	0.918	13.37	0.0	19.3	56.4
75.0	31.70	847.	23.73	580.9	774.1	0.918	0.56	0.0	19.3	27.2
76.0	31.62	847.	23.73	581.4	774.1	0.918	0.47	0.0	19.3	27.1
78.0	31.63	847.	23.73	582.4	774.1	0.918	0.49	0.0	19.3	27.1
78.0	31.63	406.	24.30	582.4	774.1	0.918	16.89	0.0	19.3	69.8
80.0	31.65	406.	24.30	616.2	774.1	0.928	16.91	0.0	19.3	69.3
82.0	31.67	406.	24.48	649.9	774.1	0.938	16.82	0.0	19.3	69.0
84.0	31.69	406.	24.65	683.5	774.1	0.948	16.74	0.0	19.3	68.7
85.0	31.75	406.	24.83	700.2	774.1	0.953	16.69	0.0	19.3	68.6
85.0	31.75	508.	24.81	700.2	774.1	0.953	13.11	0.0	19.3	55.7
86.0	31.80	508.	24.81	713.4	774.1	0.957	13.16	0.0	19.3	55.9
88.0	31.91	508.	24.88	739.8	774.1	0.965	13.23	0.0	19.3	56.1
90.0	32.00	508.	24.95	764.7	774.1	0.972	11.72	44.4	19.3	51.3
90.0	32.00	795.	24.39	764.7	774.1	0.972	2.89	0.0	19.3	30.6
92.0	32.10	795.	24.41	770.6	774.1	0.972	2.99	0.0	19.3	30.8
93.0	32.15	795.	24.42	773.6	774.1	0.972	3.04	0.0	19.3	30.9
93.0	32.15	406.	24.95	773.6	774.1	0.972	9.10	223.1	19.3	43.9
94.0	32.20	406.	24.95	782.7	774.1	0.974	9.10	224.5	19.3	43.9
96.0	32.29	406.	24.95	800.3	774.1	0.979	8.46	244.9	19.3	42.2
98.0	32.38	406.	24.95	815.5	774.1	0.982	6.81	292.5	19.3	38.3
100.0	32.46	406.	24.95	828.2	774.1	0.984	5.81	322.0	19.3	36.1
100.2	32.47	406.	24.95	829.3	774.1	0.985	5.20	338.5	19.3	34.9

CHARGE-TO-DISCHARGE RATIO = 1.07
TOTAL WATT-MIN DISCHARGED= 17096.0
TOTAL WATT-MIN CHARGED= 19535.7
ORBITAL AVERAGE LOAD POWER (WATTS)= 481.9
TOTAL LOSS WATT-MIN = 5951.8
TOTAL ARRAY AMP-MIN = 2090.8

ampere-minutes charged into the batteries; "A-M DISCHG", which is the accumulative ampere-minutes discharged from the batteries; "SOC", which is the instantaneous battery state-of-charge; "I BATT", which is the total battery charge or discharge current; "BOOST LOSS", which is the instantaneous power poss in the boost converters; and the "TOTAL LOSS", which represents the total internal subsystem power loss including the boost converters but excluding those demands listed in the load demand table under Power Module. The results of this analysis show that the basic spacecraft power subsystem is capable of supporting the anticipated EOS-A load power demands under worst case EOM design conditions.

3.1.5.4 Follow-on Mission Accommodation

Table 3.1-25 gives the estimated load demand for the SAR mission. This mission was selected because it represents the maximum load demand of any of the EOS class missions, both in terms of peak load and orbital average load demand. The instrument compliment for this mission is assumed to be the Synthetic Aperture Radar (SAR) and the Thematic Mapper. The table gives the estimated load demand by subsystem. Note that the analysis assumed that WBVTR's were used to record a portion of the data for subsequent playback to a ground station and therefore is a conservative evaluation when compared to the use of TDRSS. This total load requirement along with the specified average operational duty cycle results in an orbital average load demand of 694 watts. A graphical representation of this load profile is given in Figure 3.1-64.

To meet the requirements for this mission the basic spacecraft power subsystem must be augmented as specified below to meet these load demands.

a. The addition of two PRU's and two batteries
b. The addition of six solar array subpanels (18 circuits)
c. The addition of 10 shunt elements to shunt dissipator panel.

With this power subsystem configuration and under simulated EOM conditions, Table 3.1-26 gives the output of the energy balance program.

Table 3.1-25. Load Power Demand for SAR Mission

Subsystem \ Operational Mode	Load Power Demand (watts)								
	Operational Average Baseload	SAR Night Operation (3 min)	WBVTR Playback (6 min)	WBVTR Rewind (12 min)	Record plus Real Time to LCU (6 min)	Realtime Readout to Ground Stations and to LCU (3 min)	Sensor Warmup (15 min)	SAR Warmup (5 min)	Realtime Readout to LCU (3 min)
Attitude Control	104.	104.	104.	104.	104.	104.	104.	104.	104.
C&DH	105.	105.	105.	105.	105.	105.	105.	105.	105.
SCCM	84.	84.	84.	84.	84.	84.	84.	84.	84.
Reaction Control	20.	20.	20.	20.	20.	20.	20.	20.	20.
W/B Communications	--	330.	473.	80.	464.	330.	--	--	255.
Experiments									
Data Collection Sys.	40.	40.	40.	40.	40.	40.	40.	40.	40.
Thematic Mapper	10.	10.	10.	10.	110.	110.	110.	10.	110.
Synthetic Aperture Radar	10.	1400.	10.	10.	1400.	1400.	40.	40.	10.
SUBTOTAL	373.	2093.	846.	453.	2327.	2193.	503.	403.	728.
Distribution Losses	7.	42.	17.	9.	47.	44.	10.	8.	15.
Power Model	15.	15.	15.	15.	15.	15.	15.	15.	15.
TOTAL	395.	2150.	878.	477.	2389.	2252.	528.	426.	758.

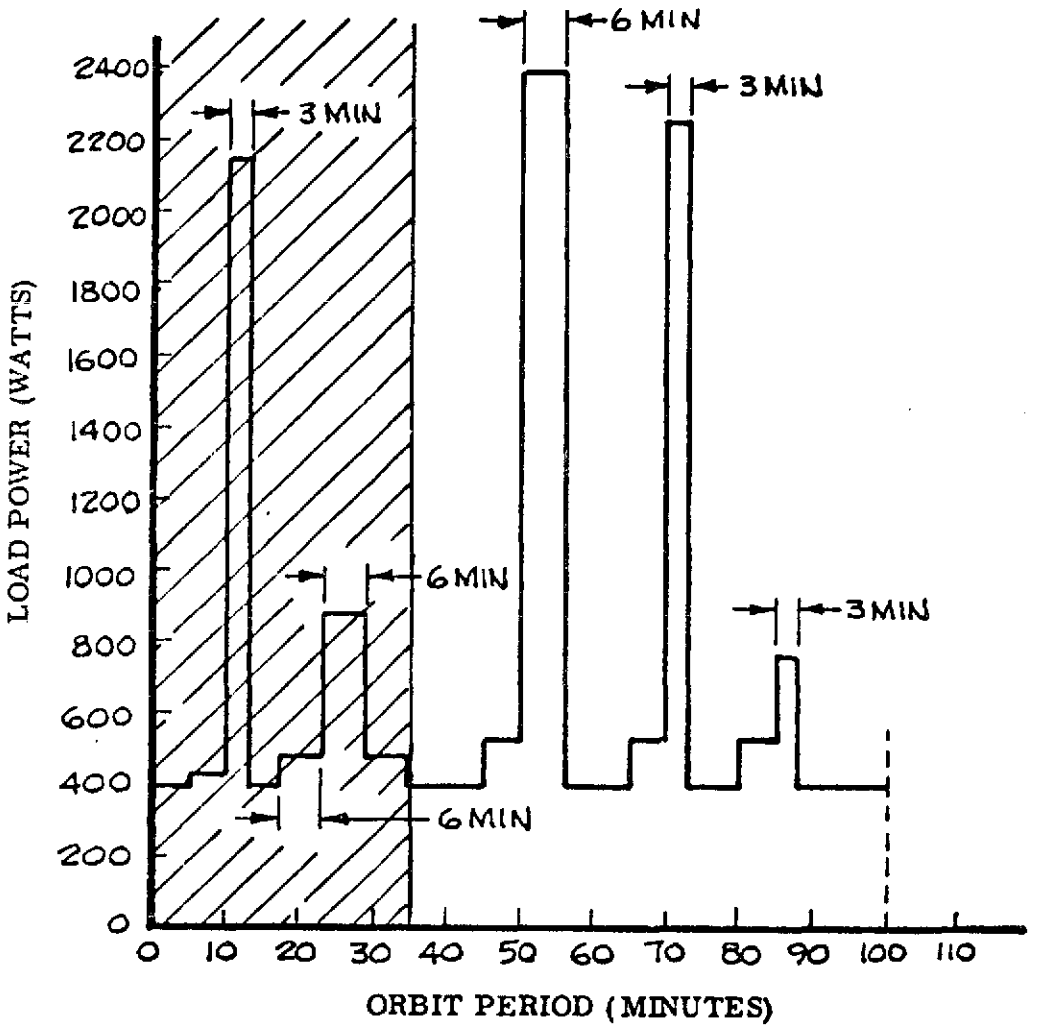

Figure 3.1-64. Load Power Profile for SAR-C Mission

Table 3.1-26. Orbital Simulation of Power Subsystem for SAR Mission

Conditions:

- EOM (2 Years), Aphelion
- 5 Batteries on-line
- 15°C Battery Temperature
- BVLS Curve No. 6
- EOS-C Load Profile (See Table 8)

TIME	I ARRAY	LOAD PWR	V BATT	A-M CHG	A-M DISCHG	SOC	I BATT	EXCESS PWR	BOOST LOSS	TOTAL LOSS
0.	0.	395.	23.29	0.	0.	0.980	-20.19	-0.0	59.1	75.3
2.0	0.	395.	23.29	0.	40.4	0.973	-20.19	-0.0	59.1	75.3
4.0	0.	395.	23.12	0.	80.9	0.965	-20.35	-0.0	59.2	75.4
5.0	0.	395.	23.02	0.	101.3	0.961	-20.44	-0.1	59.2	75.5
5.0	0.	426.	22.95	0.	101.3	0.961	-21.95	-0.1	60.9	78.0
6.0	0.	426.	22.95	0.	123.3	0.957	-21.95	-0.1	60.9	78.0
8.0	0.	426.	22.90	0.	167.2	0.949	-22.01	-0.1	60.9	78.0
10.0	0.	426.	22.80	0.	211.4	0.941	-22.11	-0.0	61.0	78.1
10.0	0.	2150.	21.77	0.	211.4	0.941	-112.63	-0.1	228.8	302.9
12.0	0.	2150.	21.77	0.	436.6	0.899	-112.63	-0.0	228.8	302.9
13.0	0.	2150.	21.32	0.	550.5	0.878	-115.19	-0.0	231.2	306.1
13.0	0.	395.	22.18	0.	550.5	0.878	-21.24	-0.0	59.6	76.1
14.0	0.	395.	22.18	0.	571.8	0.874	-21.24	-0.0	59.6	76.1
16.0	0.	395.	22.16	0.	614.3	0.866	-21.26	-0.1	59.6	76.1
17.0	0.	395.	22.12	0.	635.5	0.862	-21.30	-0.0	59.6	76.2
17.0	0.	477.	22.05	0.	635.5	0.862	-25.39	-0.1	64.3	83.0
18.0	0.	477.	22.05	0.	660.9	0.858	-25.39	-0.1	64.3	83.0
20.0	0.	477.	22.02	0.	711.8	0.849	-25.43	-0.0	64.3	83.0
22.0	0.	477.	21.97	0.	762.7	0.839	-25.49	-0.0	64.3	83.1
23.0	0.	477.	21.92	0.	788.2	0.834	-25.56	-0.0	64.3	83.2
23.0	0.	878.	21.65	0.	788.2	0.834	-46.21	-0.0	92.0	122.6
24.0	0.	878.	21.65	0.	834.4	0.825	-46.21	-0.0	92.0	122.6
26.0	0.	878.	21.60	0.	927.0	0.808	-46.33	-0.0	92.1	122.7
28.0	0.	878.	21.49	0.	1019.9	0.791	-46.57	-0.1	92.2	123.0
29.0	0.	878.	21.41	0.	1066.5	0.782	-46.77	-0.0	92.4	123.2
29.0	0.	477.	21.63	0.	1066.5	0.782	-25.91	-0.0	64.5	83.5
30.0	0.	477.	21.63	0.	1092.4	0.778	-25.91	-0.0	64.5	83.5
32.0	0.	477.	21.61	0.	1144.3	0.768	-25.94	-0.0	64.5	83.5
34.0	0.	477.	21.57	0.	1196.2	0.758	-25.99	-0.0	64.5	83.5
35.0	0.	477.	21.53	0.	1222.2	0.754	-26.04	-0.0	64.6	83.6
35.0	0.	395.	21.56	0.	1222.2	0.754	-21.88	-0.0	59.9	76.7
35.3	0.	395.	21.56	0.	1228.8	0.752	-21.88	-0.0	59.9	76.7
35.3	45.91	395.	22.27	0.0	1228.8	0.752	33.78	0.0	32.2	138.3
36.0	46.20	395.	22.27	23.8	1228.8	0.757	34.08	0.0	32.2	139.7
38.0	46.97	395.	22.33	92.6	1228.8	0.769	34.80	0.0	32.2	143.0
40.0	47.64	395.	22.51	162.4	1228.8	0.782	35.00	7.1	32.2	144.0
42.0	48.24	395.	22.69	232.4	1228.8	0.795	35.00	17.5	32.2	144.1
44.0	48.74	395.	22.87	302.4	1228.8	0.808	35.00	25.1	32.2	144.1
45.0	48.91	395.	23.05	337.4	1228.8	0.814	35.00	23.6	32.2	144.2
45.0	48.91	528.	23.12	337.4	1228.8	0.814	30.93	0.0	32.2	126.3
46.0	49.08	528.	23.12	368.4	1228.8	0.820	31.11	0.0	32.2	127.0
48.0	49.41	528.	23.20	430.9	1228.8	0.831	31.35	0.0	32.2	128.1
50.0	49.70	528.	23.36	493.7	1228.8	0.843	31.46	0.0	32.2	128.6
50.0	49.70	2389.	21.63	493.7	1228.8	0.843	-52.40	-0.0	101.7	136.1
52.0	49.90	2389.	21.63	493.7	1333.3	0.823	-52.10	-0.0	101.3	135.4
54.0	49.98	2389.	21.51	493.7	1437.7	0.804	-52.29	-0.0	101.3	135.5
56.0	50.00	2389.	21.39	493.7	1542.6	0.785	-52.58	-0.1	101.4	135.8
56.0	50.00	395.	22.40	493.7	1542.6	0.785	35.00	76.8	32.2	144.0
58.0	49.93	395.	22.40	563.7	1542.6	0.797	35.00	74.8	32.2	144.0
60.0	49.76	395.	22.61	633.7	1542.6	0.810	35.00	62.9	32.2	144.0
62.0	49.58	395.	22.81	703.7	1542.6	0.823	35.00	50.8	32.2	144.1
64.0	49.34	395.	23.01	773.7	1542.6	0.836	35.00	36.9	32.2	144.2
65.0	49.19	395.	23.21	808.7	1542.6	0.842	35.00	25.6	32.2	144.2
65.0	49.19	528.	23.29	808.7	1542.6	0.842	31.02	0.0	32.2	126.7
66.0	49.02	528.	23.29	839.6	1542.6	0.848	30.85	0.0	32.2	126.0
68.0	48.65	528.	23.38	900.9	1542.6	0.859	30.37	0.0	32.2	124.0
70.0	48.44	528.	23.35	961.2	1542.6	0.870	29.97	0.0	32.2	122.4
70.0	48.44	2252.	21.86	961.2	1542.6	0.870	-44.65	-0.0	93.1	124.0
72.0	48.20	2252.	21.86	961.2	1636.2	0.853	-46.99	-0.0	93.7	126.7
73.0	48.08	2252.	21.75	961.2	1683.4	0.844	-47.42	-0.0	94.1	128.2
73.0	48.08	395.	22.70	961.2	1683.4	0.844	35.00	12.7	32.2	144.1
74.0	47.95	395.	22.70	996.2	1683.4	0.850	35.00	9.0	32.2	144.1
76.0	47.69	395.	22.83	1066.1	1683.4	0.863	34.90	0.0	32.2	143.6
78.0	47.72	395.	23.09	1135.6	1683.4	0.876	34.59	0.0	32.2	142.3
80.0	47.75	395.	23.35	1204.5	1683.4	0.888	34.29	0.0	32.2	141.1
80.0	47.75	528.	23.58	1204.5	1683.4	0.888	29.23	0.0	32.2	119.5
82.0	47.77	528.	23.58	1263.0	1683.4	0.899	29.26	0.0	32.2	119.6
84.0	47.80	528.	23.79	1321.3	1683.4	0.909	29.07	0.0	32.2	118.8
85.0	47.89	528.	24.00	1350.3	1683.4	0.915	28.93	0.0	32.2	118.2
85.0	47.89	758.	24.02	1350.3	1683.4	0.915	20.58	0.0	32.2	88.5
86.0	47.97	758.	24.02	1370.9	1683.4	0.918	20.67	0.0	32.2	88.9
88.0	48.12	758.	24.09	1412.4	1683.4	0.926	20.77	0.0	32.2	89.1
88.0	48.12	395.	24.37	1412.4	1683.4	0.926	33.43	0.0	32.2	137.4
90.0	48.27	395.	24.37	1479.4	1683.4	0.938	33.58	0.0	32.2	138.2
92.0	48.41	395.	24.68	1546.4	1683.4	0.950	33.49	0.0	32.2	137.8
94.0	48.56	395.	24.87	1613.1	1683.4	0.962	33.28	0.0	32.2	137.1
96.0	48.70	395.	24.95	1669.5	1683.4	0.972	23.13	294.3	32.2	97.2
98.0	48.84	395.	24.95	1708.1	1683.4	0.978	15.52	511.1	32.2	74.8
100.0	48.96	395.	24.95	1735.5	1683.4	0.981	11.89	614.2	32.2	65.0
100.2	48.97	395.	24.95	1737.7	1683.4	0.982	9.93	667.7	32.2	60.2

CHARGE-TO-DISCHARGE RATIO = 1.03
TOTAL WATT-MIN DISCHARGED= 36758.8
TOTAL WATT-MIN CHARGED= 40622.9
ORBITAL AVERAGE LOAD POWER (WATTS)= 693.6
TOTAL LOSS WATT-MIN = 19191.8
TOTAL ARRAY AMP-MIN = 3153.4

3.1.6 COMMUNICATIONS AND DATA HANDLING (C&DH) MODULE

The C&DH module is one of three standard modules comprising the spacecraft bus. It contains a complement of equipment which provides spacecraft tracking, ground and on board control of all spacecraft and payload sensor functions, and retrieval of narrowband and mediumband ($<$ 650 kHz) observatory data. It is designed with enough flexibility to support a variety of missions without modification. The baseline design contains a transponder which provides TDRSS compatibility. This may be deleted for non-TDRSS missions. Interfaces between the C&DH module and other spacecraft systems are minimized to provide easy ground checkout and eventual on orbit servicing.

3.1.6.1 Requirements

The major C&DH module requirements are:

- An S-Band transponder shall be provided which is capable of GRARR, receiving command data, and transmitting narrowband and mediumband data. Modulation shall be compatible with GSFC Aerospace Data System Standards X-560-63-2. Uplink frequency shall be between 2200 and 2300 MHz. Downlink frequency shall be between 2050 and 2150 MHz. The exact uplink and downlink frequencies will be assigned for each mission and shall not impact the design of the transponder.
- The GRARR function shall be capable of supporting a maximum sidetone frequency of 500 kHz and have a turnaround ratio of 221/240.
- The transponder shall simultaneously transmit the realtime narrowband data with the mediumband data, which may consist of ranging, computer dump, tape recorder, <u>or</u> instrument data not exceeding 650 kHz.
- Transmission of narrowband data only shall be at a low power mode. Simultaneous transmission of narrowband and mediumband data shall be at a high power mode.
- The receiver dynamic range shall be -40 to -105 dBm.
- Uplink command modulation shall be demodulated, decoded, and distributed to spacecraft subsystems for execution. Command format shall be compatible with the GSFC PCM S-Band Command Standard.

- The command decoder shall have a variable seven bit spacecraft address which will be assigned for each mission.
- Provision shall be made for delayed execution of commands.
- Command data shall be distributed as either pulse or serial magnitude data.
- Analog, bi-level digital, and serial digital data shall be acquired from the spacecraft subsystems and formatted for use by an on-board computer (OBC) or ground data systems.
- Command and telemetry data shall be distributed and collected using party lines to minimize the electrical interfaces between subsystems and the spacecraft. These party lines shall be redundant and tolerant of failures.
- A standard clock frequency shall be generated and distributed to spacecraft subsystems for use in providing coherent timing among spacecraft functions.
- A timecode shall be generated and distributed for use in annotation of subsystem data.
- A general purpose digital on-board computer (OBC) shall be provided for performing computations required for on orbit operation of the spacecraft.
- The OBC shall have a basic capacity of 16K words of non-volatile memory and shall be capable of accommodating memory expansion.
- All OBC memory shall be capable of being loaded via the command uplinks and dumped via the medium band telemetry downlink.
- An omni-directional antenna which has at least a -6dBI gain over 95% of the sphere shall be provided.
- Capability shall be provided for a forward and return TDRSS link at S-Band.

3.1.6.2 Baseline Description

3.1.6.2.1 Functional

Figure 3.1-65 shows a block diagram of the C&DH module.

The omni-directional antenna serves both the STDN transponder and the TDRSS transponder for receipt and transmission of narrowband and medium data. Both transponders are tied to the antenna through a directional coupler and both links are normally powered

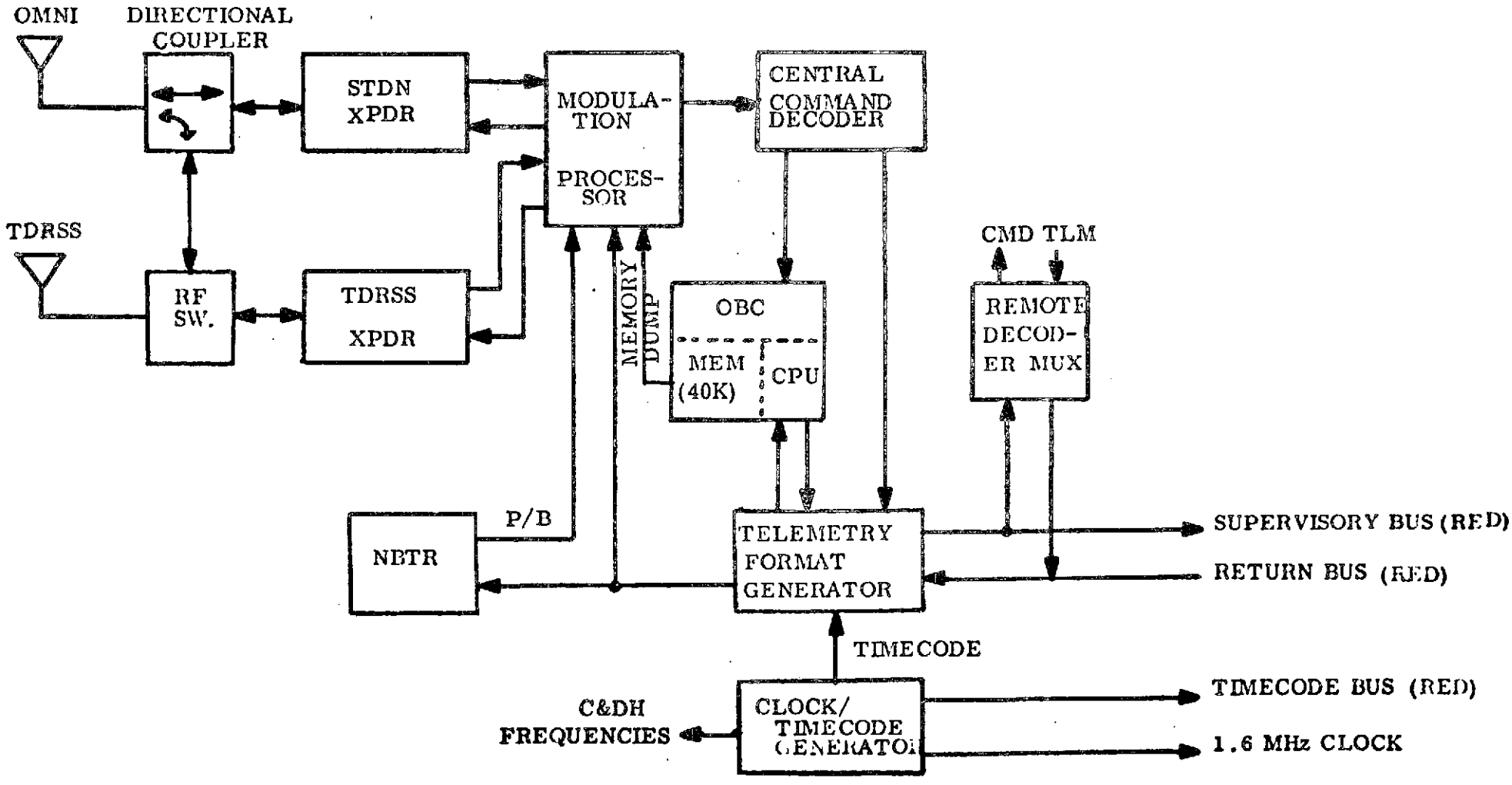

Figure 3.1-65. C&DH Subsystem

and ready to receive data from either STDN or TDRSS.

STDN operation uses the Goddard Range and Range Rate (GRARR) system for ranging. Ranging and/or command data are received by the STDN transponder. The RF signal enters the transponder at the preselector and is routed to a phase-locked loop (PLL) through a mixer and IF amplifier. The PLL acquires and tracks the carrier and demodulates the ranging and command signals which PM the carrier. (The ranging data directly modulate the carrier; the command data are on a 70 kHz subcarrier). The ranging and command data are routed to the modulation processor and a coherent downlink carrier is formed which is 221/240 of the uplink frequency. In the absence of an uplink, the downlink carrier is developed from a non-coherent oscillator (PLL VCO or auxiliary oscillator). Switchover from non-coherent to coherent operation occurs automatically when an uplink signal is detected.

The modulation processor accepts the composite ranging/command signal from the STDN transponder and applies it to a linear summer for combining with other downlink data (described later). The 70 kHz subcarrier, which is PSK'd by the command data, is discriminated and the command data are detected within a Costas-loop demodulator. The output of the demodulator is used to generate a bit sync and enable signal and the three signals (NRZ data, sync, enable) are routed to the central command decoder at 2000 bps.

The central command decoder (CCD) processes uplink commands for the spacecraft. Incoming command data are formatted in 40 bit words. The first word of a transmission is a sync pattern (39 "0's" followed by a "1"). Command word format is given in Figure 3.1-66. The first seven bits identify the spacecraft address. This address will change for each spacecraft and the CCD will only decode data addressed to it. The next two bits are an operations code which identifies the type of command data to be processed (00 = realtime, 01 = computer data, 10 = delayed command data, 11 = delayed command time tag). The next twenty four bits contain the command data. The last seven bits are a polynomial check code on the entire command word. Invalid commands are flagged in telemetry and, if realtime, rejected.

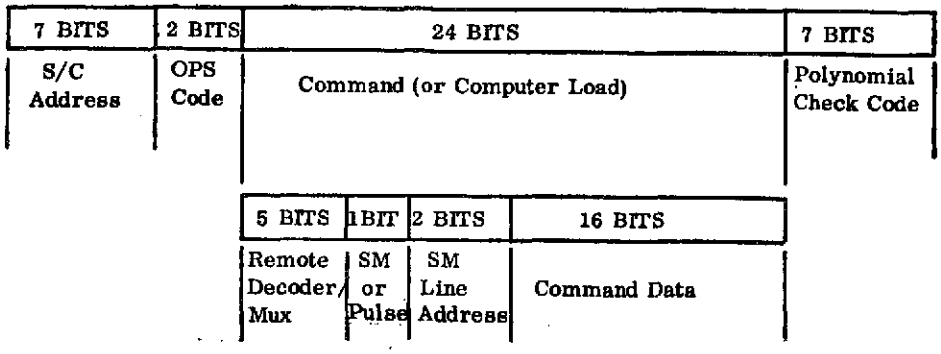

Figure 3.1-66. Command Word Format

An operations code of 00 or 10 identifies data to be eventually applied to the supervisory data bus and, hence, requires further breakdown of the 24 bit command data (shown in Figure 3.1-66). The first five bits identify one of 32 remote decoder/muxes tied to the supervisory data bus. The next bit identifies the data as a pulse command or a serial magnitude command. The next two bits identify which of four serial magnitude outputs of a given remote decoder/mux output is to be activated. The final 16 bits contain the serial magnitude command data or identify (last 6 bits) one of 64 remote decoder/mux outputs for execution of a pulse command. Realtime commands (00) are loaded into an output register and made available to the telemetry format generator for application to the supervisory data bus. Stored command data (10) are loaded into the OBC along with corresponding time tag (11) for later application to the supervisory data bus. The time tag represents the time to execution in seconds. OBC load data (01) is transferred directly to the OBC and is formatted to meet the load requirements.

The telemetry format generator (TFG) acts as a time division multiplexer of data applied to two data busses (supervisory and return). Data for the supervisory bus are received from any of three sources: (1) a RAM (or ROM) within the TFG which controls the generation of a telemetry matrix by specifying the remote decoder/mux address and gate ID to obtain data for transmission on the downlink; (2) the OBC which requests data from the remote decoder/muxes for computational purposes or issues commands to the remote decoder/mux as a result of computation, spacecraft status, or delayed command timetag; (3) the CCD which formats realtime commands from the ground. The TFG reformats

these inputs into 32-bit words for transmission to the remote decoder/muxes on the supervisory bus. The formatting is shown in Figure 3.1-67. The sync bits are illegal Manchester bits to identify the beginning of a word. The address bits identify the remote decoder/mux (one of 32) and the command type bits identify which logic to energize. The power strobe bits are unused bit times (~3 μ sec) to permit power switching transients in the selected remote to dissipate. (In the case of a telemetry address word these bits are also used to identify the first word of each major and minor frame and matrix word rate.) The remainder of the word is used to identify the output/input for performance of the selected function and for a parity check of the word.

Data to be transmitted on the supervisory data bus is Manchester encoded by the TFG and allocated to pre-determined time slots. These time slots are 31.25 usec. wide, permitting 32,000 32-bit words per second to be transmitted at the 1.024 Mbps bus rate. Every 640th slot is allocated for use by the CCD for executing realtime commands, which may be received at a maximum rate of one each 20 msec. At a downlink telemetry rate of 16

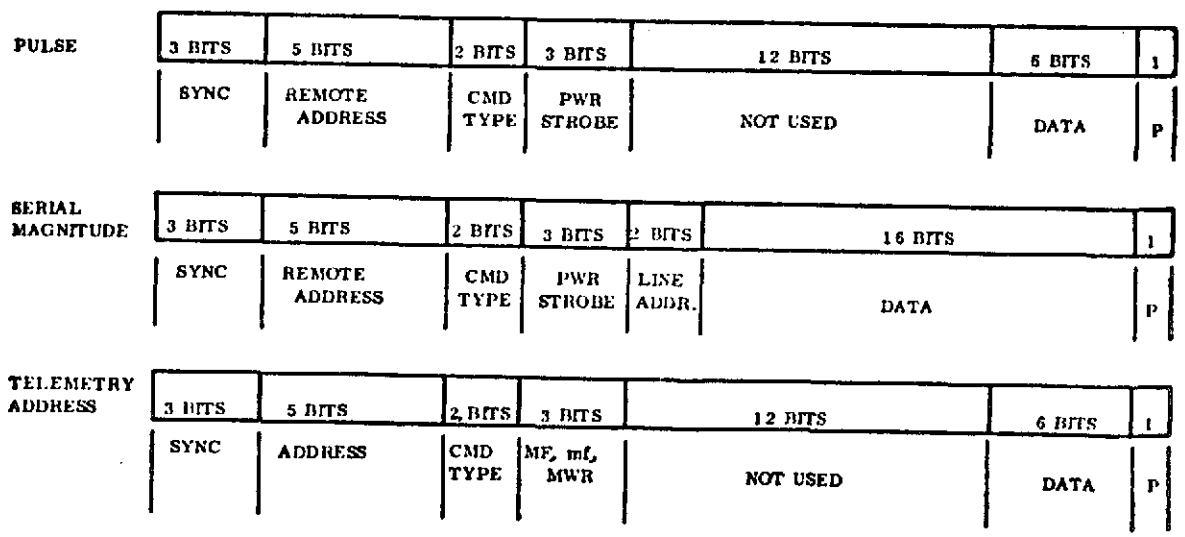

Figure 3.1-67. Supervisory Data Bus Word Format

kbps, every sixteenth slot will be allocated to the RAM (or ROM) addresses. (This allocation will be proportional to the downlink telemetry rates of 16, 8, 4, 2, or 1 kbps.) All other slots on the data bus are allocated for use by the OBC as necessary.

Up to 32 remote decoder/muxes may be tied to the supervisory data busses. These remotes are located within each of the spacecraft subsystems. Each remote contains sentry logic which checks each word on the supervisory bus for its address. If its address is recognized, it turns on power to the remainder of the logic in the remote needed to perform the function. The supervisory word can request one of five functions: (1) pulse command execution; (2) serial magnitude data transfer; (3) analog data recovery; (4) bilevel digital data recovery; (5) serial digital data recovery. A pulse command energizes one of 64 logic level outputs which remains energized for 20 msec. The remote in turn generates a status word for return to the TFG on the response data bus. This word indicates the result of a parity check on the supervisory word and the status of the remote response. A serial magnitude data transfer word activates one of four outputs which enables a user to accept data and clock for sixteen bits of information contained in the data word. Again, the remote sends a word back to the TFG on the response data bus to indicate parity check and status. An analog word activates one of 64 user inputs to the remote. This input will contain an analog signal which is digitized to eight bits and then transferred to the TFG on the response data bus along with parity and status information. A bilevel digital word activates eight (of the 64) sequential user inputs which contain bilevel digital signals. These inputs are formatted into an eight bit word and returned to the TFG along with parity and status information. A serial digital data word activates one of sixteen outputs and a clock which enables a user to supply eight bits of serial data to one of the 64 available remote inputs for transfer back to the TFG.

The TFG receives the Manchester encoded command status and telemetry data on the response data bus at 1.024 Mbps and routes it to the OBC for processing. If it is in response to a RAM (or ROM) address, the data are also formatted into a 128 x 128 word frame consisting of 124 columns of sampled data (including 4 subcommutated). (NOTE: Format may be varied to contain a lesser binary number of rows.) The TFG inserts synchronization,

minor frame ID, and time code data into the frame. The remainder of the frame format is determined by the contents of the RAM (or ROM). The RAM is reprogrammable by the OBC. The ROM contains a fixed format determined before launch. Either is selectable by command and generates remote gate addresses and identifies the type of data (analog, bilevel digital, serial digital) on the requested gate. The TFG time buffers the 1.024 Mbps data received from the response data bus in order to provide a continuous data stream to the modulation processor (or narrowband tape recorder) for transmission on the downlink at the selected data rate (1, 2, 4, 8, or 16 kbps).

The modulation processor accepts data for STDN processing from four sources: (1) GRARR data from the STDN transponder receiver; (2) realtime telemetry data from the TFG (1, 2, 4, 8, or 16 kbps); (3) mediumband digital data (up to 650 kHz from the OBC memory dump, NBTR, or mediumband instrument); (4) special instrument analog data (500 kHz bandwidth). The realtime telemetry data is PSK'd onto a 1250 kHz subcarrier and is linearly summed with either the GRARR or mediumband data (biphase) which directly modulate the carrier. The special instrument analog data may also be transmitted simultaneously (if desired) and is frequency translated to a $\pm$ 250 kHz band about 2.25 MHz. The composite signal out of the modulation processor is applied to the transmitted section of the STDN transponder, which has a modulation bandwidth of 2.5 MHz and an RF output of two watts.

The OBC within the C&DH module consists of a central processor unit (CPU), five 8K core memory modules, and a power switch to provide control of power to memory sections accessed by the CPU. The CPU provides DMA control via an I/0 buffer which interfaces with the CCD (memory load or delayed command inputs), TFG (access to supervisory and response data busses and RAM control), and the modulation processor (memory dump at 128 kbps). This digital computer performs a number of spacecraft data analysis and control functions which are discussed in detail in Section 3.1.7.

The C&DH module contains a frequency and timecode generator for providing a standard clock reference and timecode annotation for use by all the spacecraft subsystems. The

frequency generator will use a 3.2 MHz oscillator as a stable reference and derive all frequencies needed by components within the C&DH module. It will also provide separately buffered 1.6 MHz balanced output drivers for use as a standard clock by other S/C subsystems. The timecode generator will provide a 32 bit timecode representing milliseconds of a month. This timecode will be inserted into the four subcommutated columns in the first minor frame of each major frame. It will also be avaiable on a 35 kbps data bus to other S/C subsystems.

The C&DH module also provides capability for processing of data via TDRSS. The TDRSS transponder is switched between either of two antennas: the omni-directional antenna, which is shared with the STDN transponder as discussed above; an eight foot dish which must be pointed (open loop) at the TDRSS. Communication links may use either the TDRSS multiple access (MA) or single access (SA) system. MA is preferred since it can receive data from several spacecraft simultaneously.

Command rate from TDRSS MA to the omni-directional antenna is only about 1 00 bps; 1000 bps can be received by the omni antenna from the TDRSS SA antenna or by the 8 foot dish from either TDRSS antenna. Ranging data can be received through any of the links.

The forward link signal to the TDRSS transponder contains data PSK modulated onto an RF carrier. The data includes command data modulo-2 added to identification detection (ID) code, and modulo-2 added to a pseudo-random noise (PN) code. The PN provides a spread spectrum needed to meet IRAC power density requirements. It is also used for ranging. After the signal passes through the RF amplifier, the mixer, and the IF amplifier, the PN code is removed by molulo-2 addition to a locally generated PN code in the second mixer. The local PM code is generated in the "code tracking loop" by continuously advancing the state of a shift-register-with-feedback until it has a high correlation, i.e., is in step, with the incoming code. It is necessary to remove the uplink PN code from the carrier to establish the presence of the ID, and to demodulate the command data. The second mixer output is a frequency translated version of command data PSK modulating a carrier and hence suppressing it. The new frequency is f_2-f_1. This signal is routed

to a Costas loop which is used to acquire and track the suppressed-translated carrier, and to demodulate the command data. The command data are then routed to the modulation processor which generates bit sync and enable signals. Data, bit sync, and enable signals are then routed to the central command decoder for processing.

Ranging is performed using the PN code, which has been bit detected on-board in the code-tracking loop. A unique return code is generated in phase with the received code. (The return links to TDRSS are code-division multiplexed so that each user transmits on a unique code for the ground station to be able to separate up to 20 users transmitting at the same time and frequency. Thus a unique code is required whether the user transmits coherently or non-coherently.) The unique PN code is half-added to convolutionally encoded telemetry data from the modulation processor to form a single digital wavetrain, which then PSK modulates the return link carrier. This permits simultaneous ranging and narrowband telemetry. The return carrier may be coherent or non-coherent, depending on whether or not a forward link carrier is present and is being tracked in the PLL.

The return link from the TDRSS transponder will operate through the eight foot dish only, since the omni-directional antenna would limit data rates to 100 bps. Transmission through the eight foot dish will permit data rates up to 560 kbps with a 2 watt output. This gives an optional mode for transmission of medium rate data in lieu of ranging and narrowband telemetry.

Redundancy within the C&DH module is limited to those components necessary to track and command the S/C in order to permit retrieval by shuttle. These include the S-band transponder, command demodulator and modulator linear summer in the modulation processor, the CCD, the data bus drivers in the TFG, the data busses and remote decoder/muxes, and the frequency and timecode generator. The CPU and power switching networks of the OBC will also be redundant to provide increased reliability in the performance of critical spacecraft functions.

3.1.6.2.2 Hardware

The components which make up the C&DH module are listed in Table 3.1-27 along with their size, weight, and power.

Antenna. The antenna is an omni-directional slotted cylinder used for both transmit and receive at S-Band. This antenna has a -3dBI free space gain, but suffers a 15% blockage due to the spacecraft and its appendages. It is located on a 40 inch boom at the forward end of the spacecraft. This antenna is a new design.

STDN Transponder

A block diagram of the STDN transponder is given in Figure 3.1-68. This unit is a phase lock loop, S-Band Transponder whose downlink carrier frequency is determined by a choerent sample of the received uplink carrier (when present). Received data are demodulated from the PM'd carrier and provided as an output. Input data PM the downlink carrier with a modulation bandwidth of ±2.5MHz. This transponder is a slight design modification of the Motorola USB transponder used on ERTS.

Table 3.1-27. C&DH Module Components

Component (quantity)	Size (in)	Weight (lbs)	Power (watts)
STDN Transponder (1)	13 x 6 x 8	25.0	19.5
Modulation Processor (1)	6.5 x 6 x 8	10.0	3.0
Central Command Decoder (1)	6 x 4 x 1.5	6.0	5.0
On Board Computer			
CPU (2)	9 x 7 x 1.5	4.0	5.0
Memory & Power Switch (5)	9 x 7 x 6	11.0	70(on)/ 1.4(stdby)= 12.4(avg.)
Power Conv. (1)	9 x 7 x 1.5	5.0	5.0
Telemetry Format Gen. (1)	6 x 4 x 6	7.0	8.3
Remote Decoder/Mux (2)	6 x 4 x 2	1.5	1.2
Clock and Timecode Gen. (1)	6 x 4 x 4	2.0	7.0
NBTR			
Transport (1)	13 x 13 x 5.5	18.0	40.0
Electronics (1)	13 x 6 x 4	10.0	
TDRSS Transponder (1)	12 x 6 x 4	25.0	25.0
Antenna (1)	8 x 8 x 6	7.8	--
Directional Coupler (1)	3 x 2 x 1	1.0	--
RF Switch (1)	2 x 2 x 1	1.0	--
Interconnecting Harness	- - - -	14.0	--

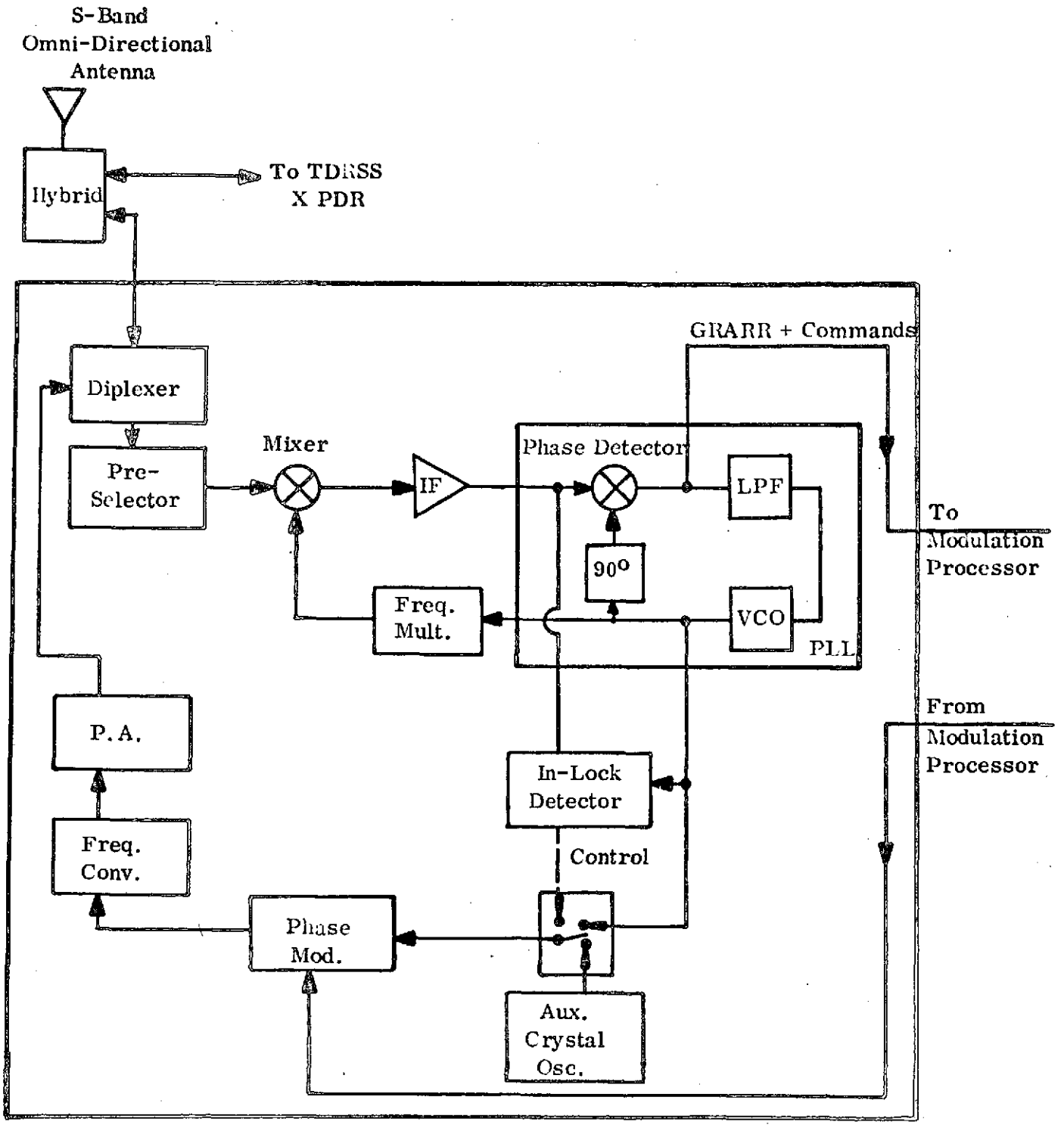

Figure 3.1-68. STDN Transponder

Modulation Processor

The modulation processor is shown in Figure 3.1-69. This processor uses a Costas loop demodulator to obtain command data from the STDN 70 kHz subcarrier or from the TDRSS transponder. These command data are used to develop corresponding bit sync and enable signals and all three signals are output to the command decoder. The modulation processor also selects, conditions, and convolutionally encodes (TDRSS only) the narrowband and mediumband data and provides composite output signals as modulation inputs to the STDN and TDRSS transponders. The modulation processor is a new design, but is similar to the premodulation processor used on ERTS.

Central Command Decoder

Figure 3.1-70 shows the central command decoder. This unit is used to decode the uplink command data and determine its destination (OBC for stored command or memory load; TFG for application to the supervisory data bus). It loads the output data into a register and provides a ready signal to the OBC or TFG for subsequent readout. This unit is a new design.

Telemetry Format Generator

The telemetry format generator (TFG) is shown in Figure 3.1-71. It controls operation of the supervisory and return busses which provide access to the remote decoder/muxes. It controls the sequencing of data on the supervisory bus by periodically sampling its internal ROM (or RAM) and the output registers of the CCD and OBC. It also controls the formatting, data rate and time buffering of telemetry data to be transmitted to the ground. Major frame, minor frame and word rate signals are developed and inserted into the telemetry address words on the supervisory data bus. This unit is a new design.

Remote Decoder/Multiplexer

The remote decoder/muxes accept command data from the supervisory data bus and feed telemetry data to the return data bus. They act as the command and telemetry interface with each of the spacecraft subsystems. Each provides 64 pulse command outputs, four serial magnitude outputs, and 64 telemetry inputs (analog, bilevel digital, and up to 16

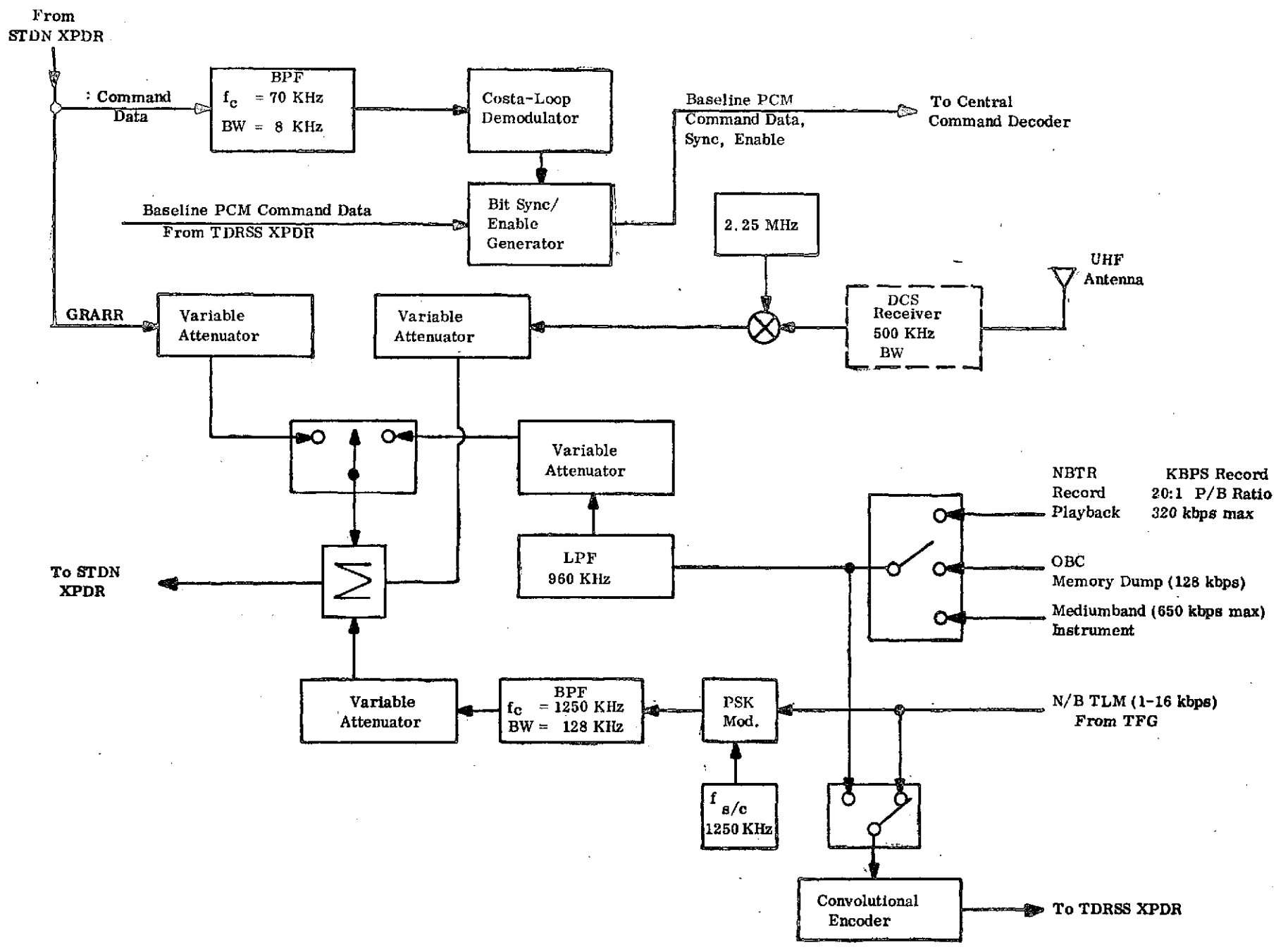

Figure 3.1-69. Modulation Processor

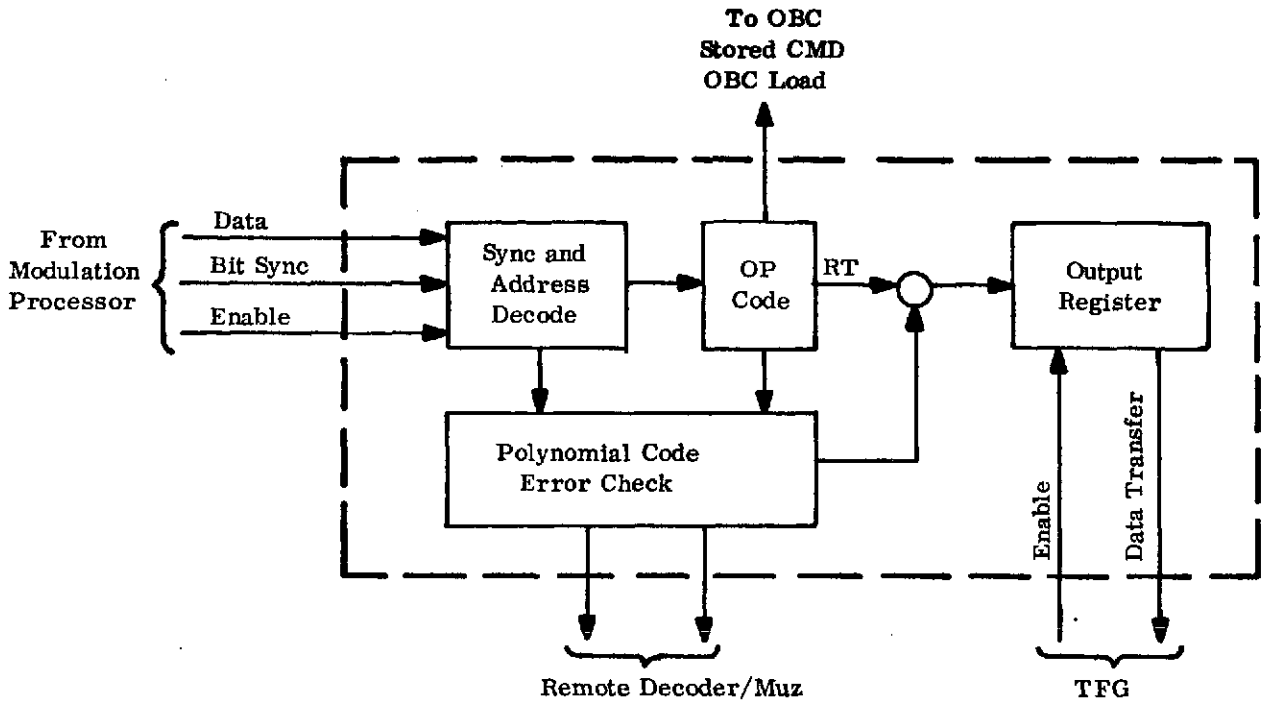

Figure 3.1-70. Central Command Decoder

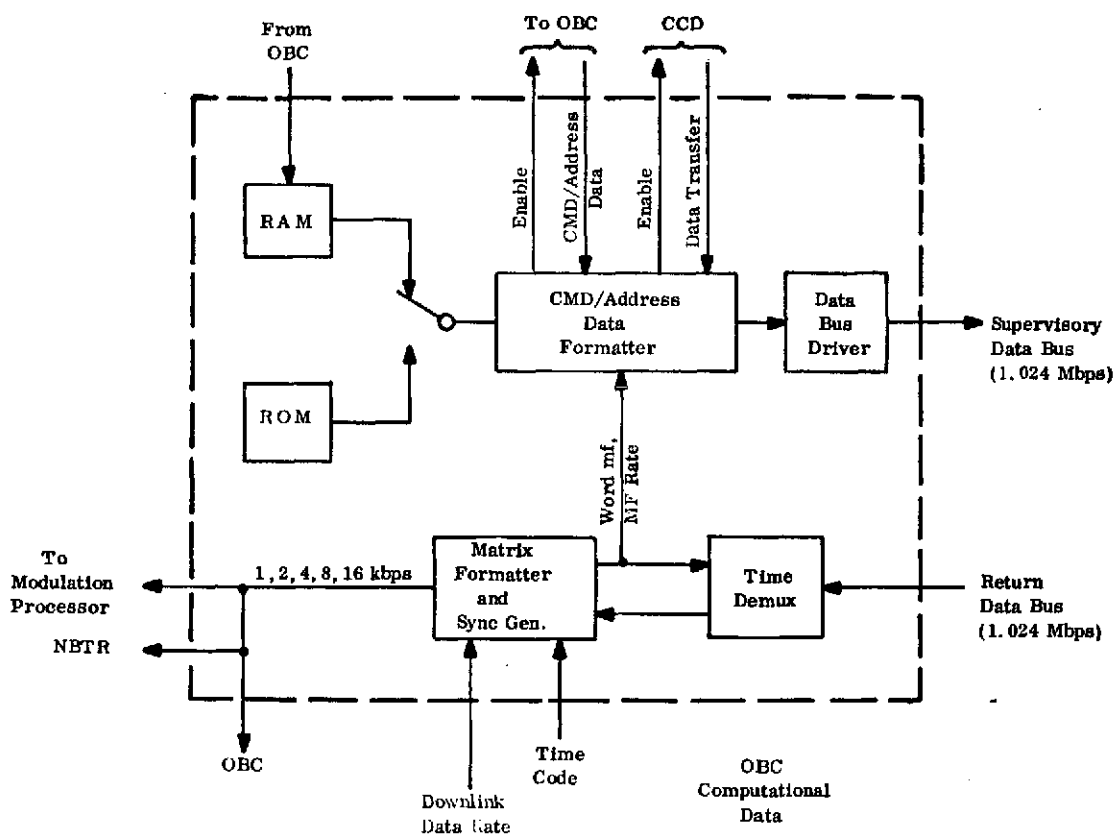

Figure 3.1-71. Telemetry Format Generator

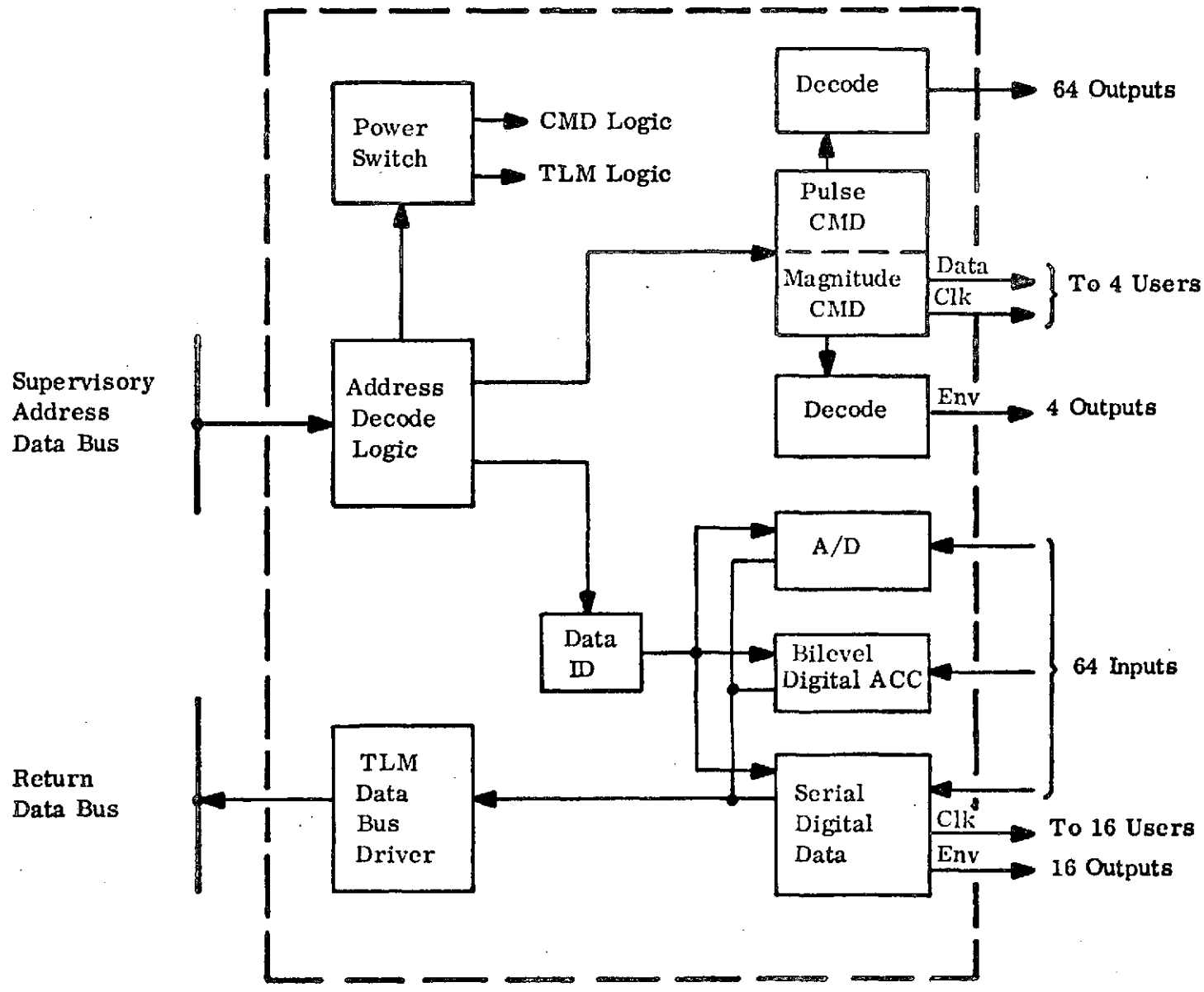

Figure 3.1-72. Remote Decoder/Mux

serial digital). Figure 3.1-72 is a functional block diagram of the remote. It is a new design.

On-Board Computer

The on-board computer is an AOP with five 8K core memory modules. (Capability exists for expansion to 64K words of memory with the addition of three modules.) It performs on-board computational, analytical, and control functions by issuing commands to and requesting data from the remote decoder/muxes. It iterfaces with the CCD, TFG, and umbilical with DMA I/O's.

Clock and Timecode Generator

The clock and timecode generator uses a 3.2 MHz temperature compensated oscillator for deriving all clock frequencies needed by components within the C&DH module. It also provides six separately buffered 1.6 MHz balanced outputs for use as a standard clock by other spacecraft subsystems. It generates a 32 bit (LSB = 1msec) timecode (incremental counter) and distributes this to the TFG and to external subsystems via a 35 kbps data bus for use in annotating data. This unit is a new design.

Narrowband Tape Recorder. The NBTR is the NASA/GSFC universal 10^9 recorder currently under development. It records bi-phase digital data and provides a 20 to 1 playback to record ratio.

TDRSS Transponder. The TDRSS Transponder is an S-Band transponder which demodulates the uplink PSK PN code data, extracts ID and command data (if any), and applies a correlated, locally generated PN code to the downlink to be used for ranging. It also accepts convolutionally encoded data from the modulation processor which is half-added to the ranging PN code for PSK of the downlink. Uplink command data are provided as an input to the modulation processor which generates enable and bit sync for the CCD. A block diagram is given in Figure 3.1-73.

3.1.6.2.3 Interface

The C&DH module mechanical layout of components is shown in Figure 3.1-74. The

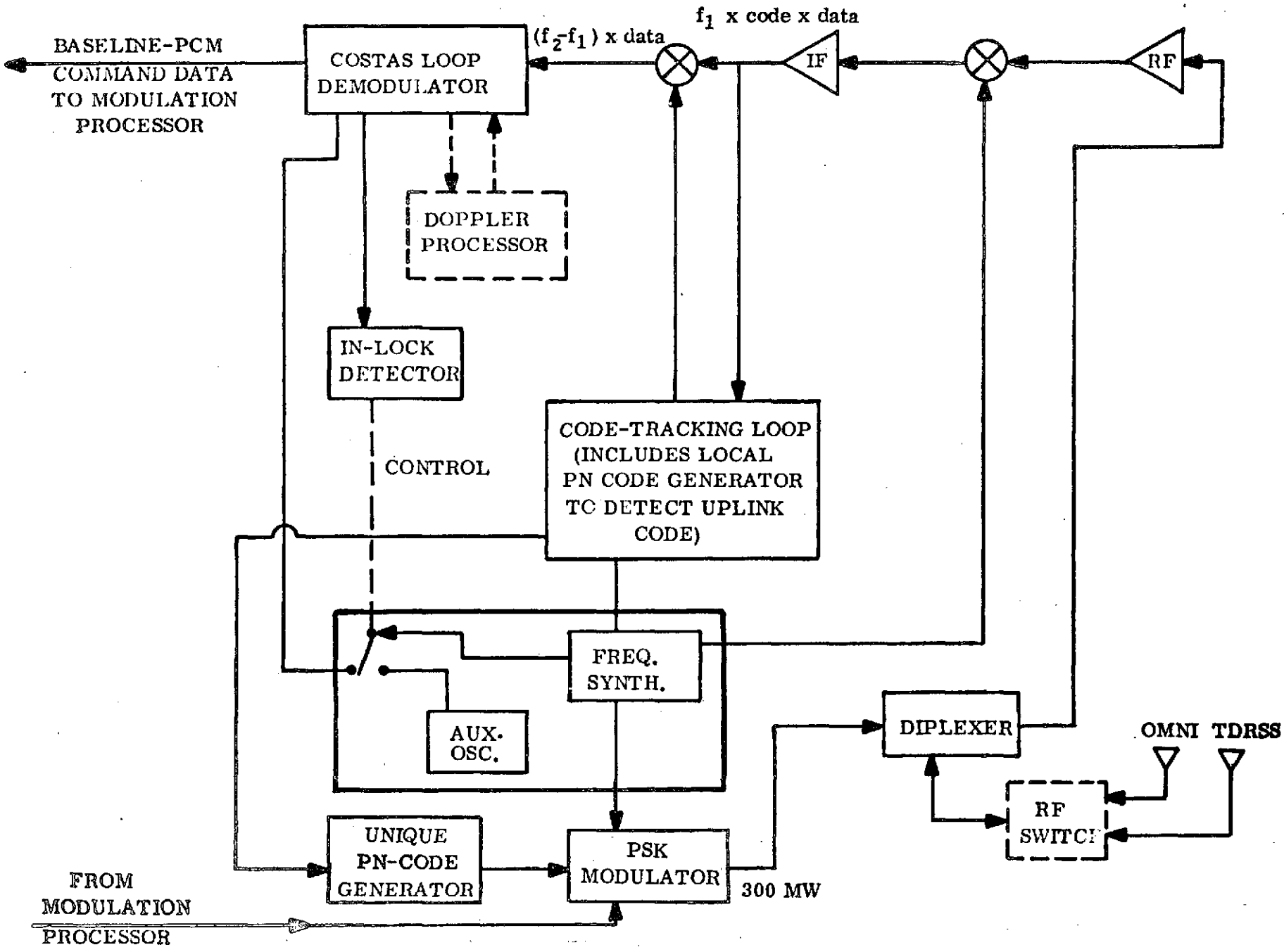

Figure 3.1-73. TDRSS Transponder

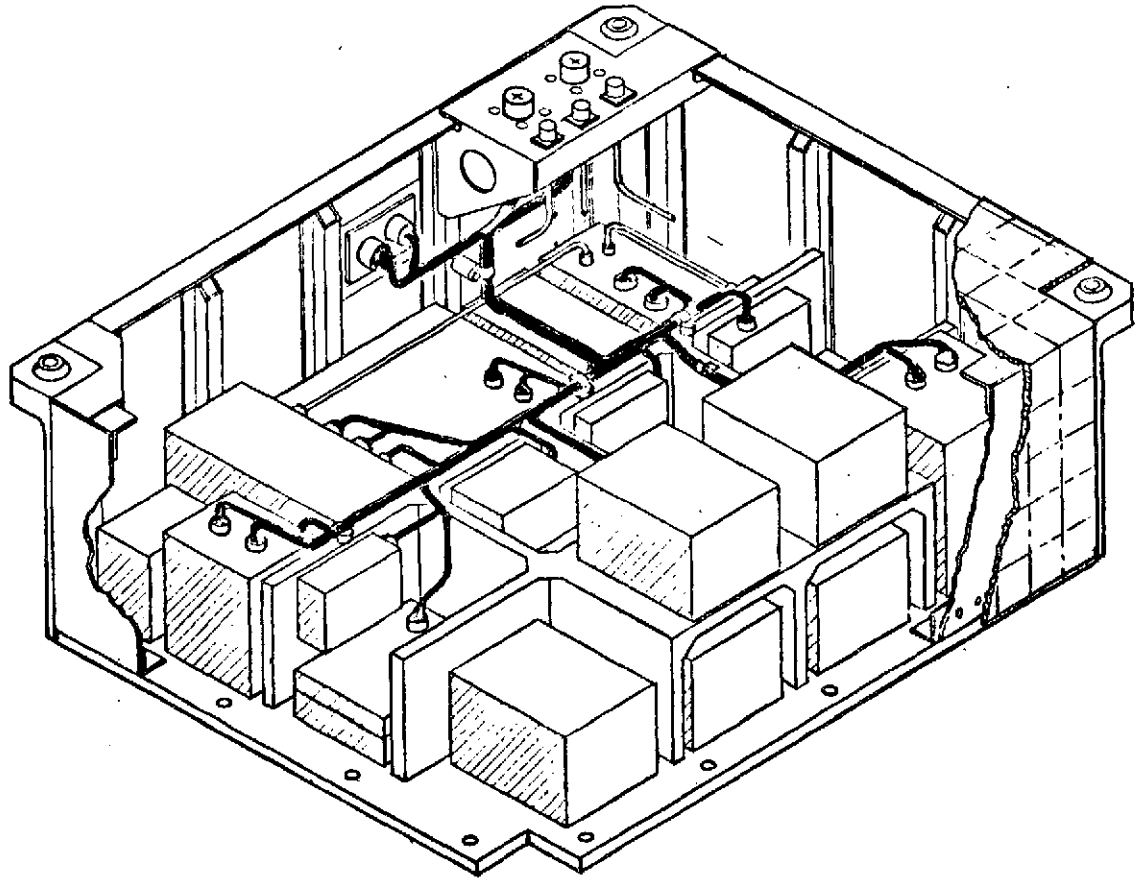

Figure 3.1-74a. C&DH Subsystem Module

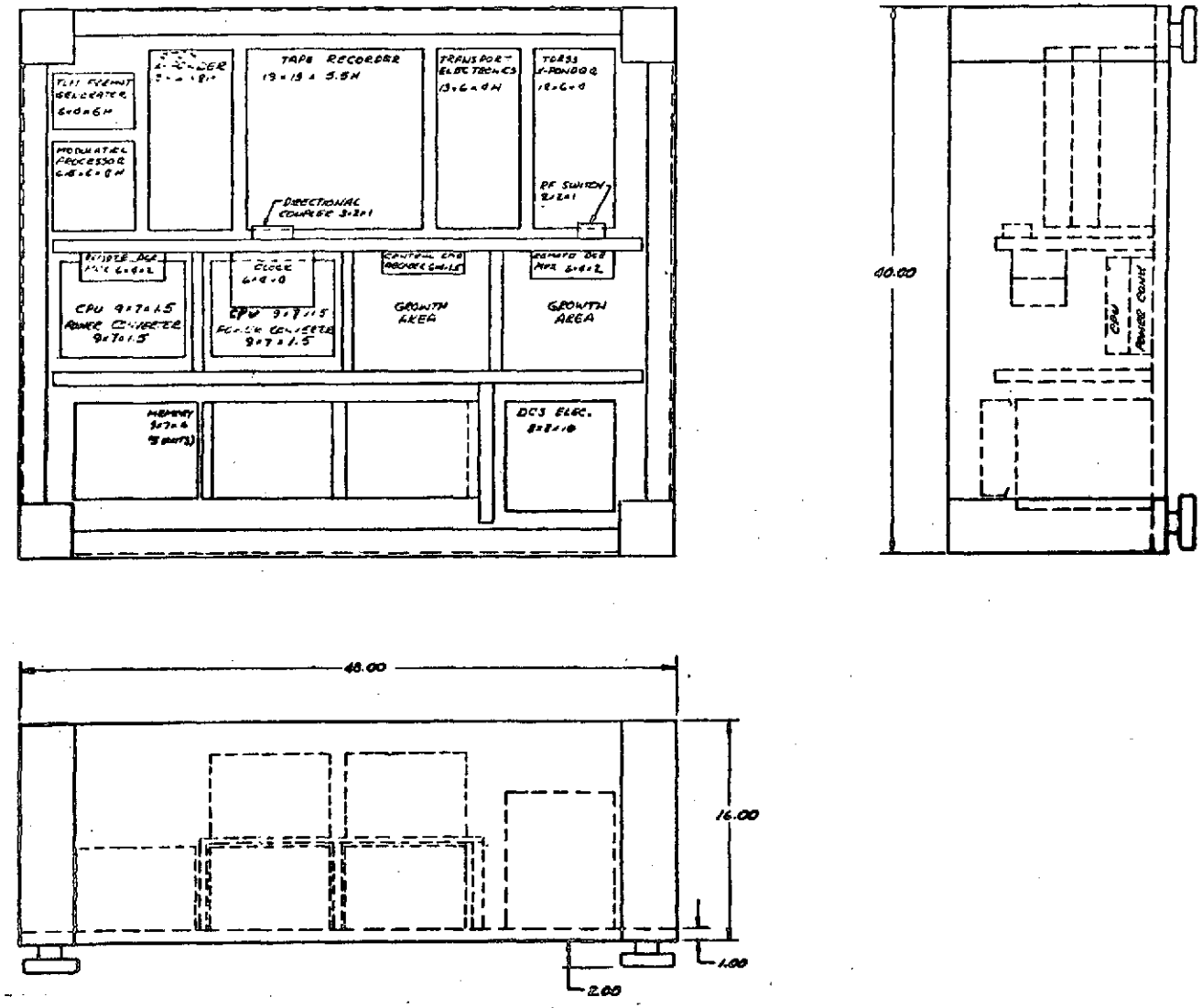

Figure 3.1-74b. C&DH Module Layout

electrical interface characteristics are given in Table 3.1-28.

3.1.6.2.4 Operation

One side of each of the transponders, the modulation processor, the central command decoder, and the clock and time code generator will be powered at all times. The redundant sides will be selected by command. The remote decoder/muxes sentry logic will necessarily look for command data on both supervisory busses (only one will be operated at a time) and will output data on both return busses with the TFG selecting the data from one or the other. The redundant CPU in the OBC will be selected either by command or when a self-check of the powered CPU has a negative result. The NBTR (if present) will be used to record data during the absence of a realtime link (STDN or TDRSS). The TFG will be powered continuously.

3.1.6.3 Performance

The optimized baseline design differs with the original GSFC baseline in the following areas:

Table 3.1-28. Module Electrical Interface

Signal	No. of Pins	Cable
Input Power	2 + 2 RTN	T2
Heater Power	1 + 1 RTN	T2
Supervisory Data Bus	2 + 2 RTN	T2S
Return Data Bus	2 + 2 RTN	T2S
Module Signal Return	2	SC
Shield Tie (Chassis Gnd)	10	--
1.6 MHz Clock	6 + 6 RTN	Twin-ax
Timecode Data Bus	2 + 2 RTN	T2S
Omnidirectional Antenna	1	Coax
TDRSS Antenna	1	Coax
OBC DMA to Umbilical	2 + 2 RTN	T2S
Umbilical to CCD Input	3	SCS
TFG Output to Umbilical	1 + 1 RTN	T2S
Mod. Proc. to Umbilical	1 + 1 RTN	T2S
DCS to Antenna (optional)	1	Coax

Uplink Modulation - a modulation scheme was chosen which is compatible with both STDN and TDRSS (except for data rate).

Narrowband data rate - examination of all EOS mission profiles indicate a narrowband telemetry rate greater than 16 kbps will never be needed. Data rates up to 64 kbps could be accommodated by the data busses and a change in TFG and STDN transponder design. Most missions require 8 kbps or less.

Two data bus command and telemetry system - Command rates are very slow relative to the telemetry address rate and can easily be time multiplexed with the telemetry addresses by using a higher data rate on the busses. This also permits greater bus access time to the OBC. Biphase modulation was chosen for the data busses to eliminate DC components which would negate transformer coupling.

Clock stability - stability of $\pm 1 \times 10^8$ per year was necessary to provide clocking to the MOMS for supporting TM and HRPI data.

Time code resolution - one msec resolution required for TM and HRPI data annotation.

Master oscillator frequency - 3.2 MHz is readily available in a temperature compensated oscillator which gives the stability required.

OBC memory - 40 kwords of memory is sufficient to handle all EOS mission data processing requirements.

STDN transmitter power - 1 watt output adequate for data transmission and available in an existing unit (ERTS).

NBTR - capability added to provide narrowband telemetry data storage for rapidly varying functions and for diagnostic use in the event of a failure.

3.1.6.4 Follow-on Mission Accommodation

The C&DH module is capable of supporting all missions defined in the EOS mission profile. The downlink modulation scheme is compatible with a variety of payload data requirements as long as mediumband digital data do not exceed 650 kbps or analog data do not exceed 500 kHz bandwidth. Narrowband telemetry rates on the downlink are selectable by command (1, 2, 4, 8, or 16 kbps). Matrix formatting can be changed at any time by reprogramming the RAM in the TFG from the OBC. The ROM format can be selected before launch as long as it is within the 128 x 128 matrix requirement.

3.1.6.5 Alternatives

The TDRSS transponder may be removed for missions not requiring TDRSS access. Convolutional encoding circuitry in the modulation processor is minimal and would remain.

The NBTR and redundant OBC CPU may be removed for later missions where confidence in the spacedraft design and operation is increased.

Some work is presently being done to combine the STDN and TDRSS functions into a single transponder. This would permit common use of much of the circuitry used by both links and should be incorporated when available. It would require some additional weight and power penalty in non-TDRSS missions, but this would be minimal.

Provision is made for housing DCS within the module and the DCS antenna external to module.

3.1.7 BASIC SOFTWARE

The On-Board Computer (OBC) will perform a number of spacecraft functions needed for on board evaluation and control of the spacecraft. A major function of the OBC is to provide the computational support needed to maintain spacecraft attitude using the sensors and reaction control devices in the attitude control module. Another important function is to provide delayed command storage, telemetry data handling (formatting, status, limit checks, alarm) and power management. Each of these functions is handled

by a basic software package (see subsequent paragraphs). These programs and the mission peculiar programs (see Section 3.2.9) are married by an executive program which controls the DMA channels and the sequencing of the various program functions. The amount of CPU processing time and memory storage needed for each of the basic programs is given in Table 3.1-24. The remaining processor time and an additional 18 kwords of memory are provided in support of mission peculiar functions.

3.1.7.1 Executive Software

The OBC Executive performs the following functions in coordinating the operation of the various EOS Subsystem Software (SS) Application Packages:

1. Controls the order in which each of the SS Application Packages is executed.
2. Monitors the exchange of information between the OBC and (a) the Central Command Decoder (CCD), (b) the Telemetry Format Generator (TFG), and (c) the Modulation Processor.
3. Monitors the "dumping" of memory information to the ground and the loading of memory from the ground.
4. Performs various self-testing and checking functions to determine whether the OBC is operating properly.
5. Assigns buffer areas and associated addresses and block counts in conjunction with the performance of the above functions.

Information transferred from the CCD to the OBC includes commands received from the ground for subsequent delayed execution, and ground supplied memory load data. Memory

Table 3.1-29. CPU and Memory Loading

	CPU (%)	Memory (K words)
Executive	5.0	8.0
ACS	30.0 (inst.) 24.0 (avg.)	7.0
Command Storage	0.5	3.0
Telemetry Data Handling	15.0	12.0
Power Management	0.2	0.5
TOTAL (Basic S/C)	50.7 (inst.) 44.7 (avg.)	30.5

dump information (for transmission to the ground) is transferred from the OBC to the Modulation Processor.

Information transferred to the OBC from the TFG includes TLM data and special data acquired by the TFG in reference to specific OBC requests. Information transferred to the TFG from the OBC includes delayed commands, commands issued by the AOP, and TLM addresses for the RAM which controls the TLM matrix. The implementation of this information exchange is achieved through use of a hardware Direct Memory Access (DMA) memory cycle stealing technique. Although the actual transfer of data is implemented by hardware the Executive must (a) determine which buffer areas are to be used for the insertion/extraction of information; (b) establish in memory two words per channel relating to the address of the first word in the channel buffer (block) area and the length of the block; (c) establish the appropriate bit pattern in the (hardware) Activation Status Register (ASR) which controls the activation/deactivation of any DMA channel; and (d) provide the software interpretation of the interrupt which occurs when a complete channel block has been inserted/extracted. In conjunction with the interrupt function the Executive establishes the appropriate bit pattern in the Lockout Status Register (LSR) which can be used to inhibit any interrupt. The Executive can also prevent all interrupts from being serviced by use of the Set Interrupt Override instructions; the Executive issues the Reset Override Instruction to negate the effect of the Set Interrupt Override instruction.

The SS Application Packages controlled by the Executive include those relating to ACS, Power Management, Telemetry Data Processing, Command Storage and Sequencing, Antenna Pointing, Payload, and Shuttle. The Executive initiates the performance of these Packages on a priority basis utilizing a software-implemented Real Time Clock (RTC) and/or an Elapsed Time Counter (ETC). The frequency with which each of these packages must be performed, the time at which they were most recently performed, and their relative priority are contained in the Executive tables. The Executive periodically examines the RTC/ETC status to ascertain whether any given Package should be performed. On occasion - due either to the pre-established performance or data derived from the

TLM streams - it is necessary for the Executive to interrupt the Package in process. When this occurs the Executive "saves" data relating to the performance status of the interrupted Package and initializes conditions for the interrupted Package. Upon completion of the latter, the Executive resumes operation of the interrupted Package by restoring the "saved" data to the proper registers/memory locations. A functional flow diagram is given in Figure 3.1-75.

3.1.7.2 ACS Software

The ACS software processes data from three sensor components; the Inertial Reference Unit (IRU), the Star Tracker, and the Sun Sensor (during acquisition). During normal operation, the OBC accepts three channels of IRU data (of a possible six), which are input every 500 milliseconds. The software calculates the average spacecraft angular rate over this time period, and updates the attitude of the spacecraft every second. The attitude error is calculated based upon a ground uplinked attitude profile, corrects for spacecraft mements of inertia, compensates for control loop stability, and outputs to the momentum wheel drives every 500 milliseconds.

The computer also interrogates the star tracker every forty seconds, and obtains two axis star information. This information is corrected, checked against a ground uplinked star table, for magnitude and location, and either accepted or rejected. If rejected, the OBC signals the star tracker to search for a new star. If accepted the star is processed through additional software to calibrate the IRU and adjust the IRU's output.

During acquisition, the sun sensor provides two axes information which is corrected and processed by software to calculate attitude errors. The error is compensated for control loop stability and output to both the momentum wheels and the Propulsion Reaction Control Subsystem (PRCS). The PRCS signals are output to the PRCS drivers in the form of pulse commands on an "as required" basis.

To remove angular momentum from the spacecraft, the OBC calculates an approximate Earth magnetic field based upon a ground furnished data point. The output of this field

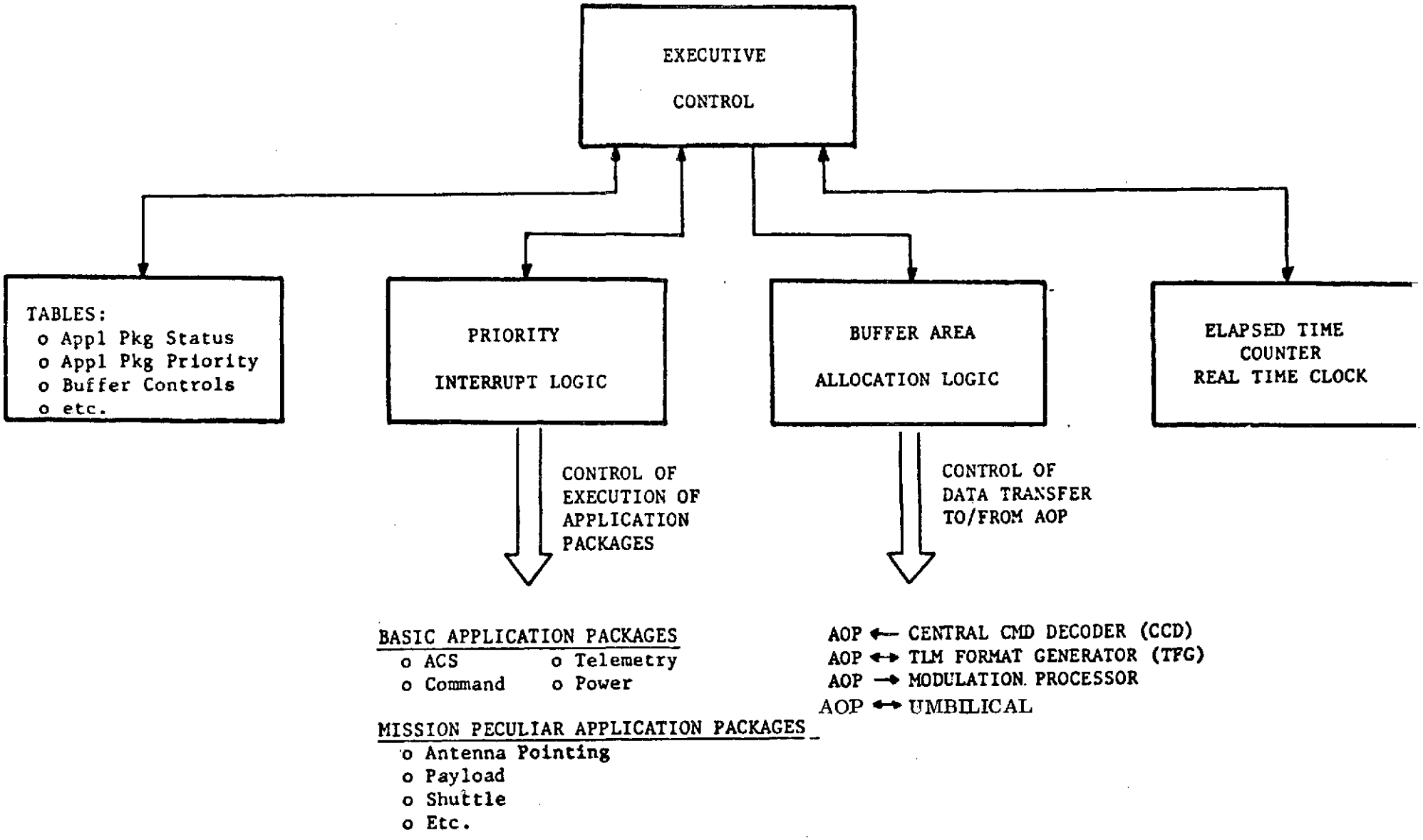

Figure 3.1-75. Functional Diagram of Executive Software

model is combined with the output of the momentum wheel tachometer (obtained every ten seconds from the momentum wheel driver electronics), to calculate the commands required by the magnetic torquers. The commands are output to the magnetic torquer drivers every 10 seconds.

In addition to the attitude profile sequence, the Star Table, and the magnetic field data point, the ground provides solitary commands to the OBC as the need arises. These commands include: switching to and from the acquisition mode, enabling and disabling the PRCS, switching to the backup controller, selecting the IRU channel and disabling malfunctioning components.

3.1.7.3 Command Software

Two basic functions are performed by the command software: (1) Commands are stored from the uplink for later execution; (2) commands are issued in response to data obtained from the spacecraft telemetry sensors. Both of these functions are dependent on preprogrammed information contained in memory and take little processing time.

Delayed commands are obtained from the central command decoder which obtains the data from the uplink. Command data will be transferred to the OBC in two 24 bit words. The first word contains the information necessary for later transmission on the supervisory data bus (see Figure 3.1-66); the second word contains the time tag which provides time to execution in seconds (LSB first). The CCD will load the data into a register and provide the OBC with a ready signal for transfer of the data. Minimum time between words is 20 msec. The OBC will be capable of storing 500 commands and timetags. Commands will be loaded chronologically, so the OBC can examine one word at a time. A second file will be maintained for storage of ten words and timetags. All words in this file will be examined each second, permitting a random load sequence. Each group of delayed commands transmitted will be preceded by a computer word indicating which file to use.

The OBC also maintains a file of up to 500 commands (individual and sequences) which

will be executed as a response to data obtained from the narrowband telemetry output of the TFG. The OBC receives the telemetry data at a 1, 2, 4, 8, or 16 kbps rate (depending on the mission) and examines selected functions based on pre-programmed requirements. Commands will be issued when these functions assume certain values indicating failure modes or operational modes requiring a response (selection of redundant components or operational sequences).

3.1.7.4 Telemetry Software

The OBC is responsible for telemetry format control, status determination, limit checking, and alarm indication. These functions are performed on the basis of information obtained from the telemetry data supplied by the TFG.

Telemetry format control is limited to storing of the desired format (128 x 128 matrix; four subcommutated columns) as remote decoder/mux address (5 bits), gate address (6 bits), and data ID (2 bits). These data are transferred, on command, to the RAM in the TFG and may be changed from the ground by an OBC program load.

Status checking determines the operational status of each spacecraft subsystem. A maximum of 200 status events are monitored. A record is kept in memory of status changes of interest or which were not expected. This record is transferred to the ground during an OBC memory dump. A response command (or command sequence) may also be issued.

Limit checking is done for up to 100 selected analog telemetry parameters which are checked against an upper and lower limit to insure subsystem/spacecraft performance and safety. Out of limit conditions result in a ground telemeter flag (same as status) and/or a response command (or command sequence).

Alarm checks monitor up to 25 specific spacecraft events and then result in appropriate action: (1) Data are presented to the ground system which will initiate action as necessary; (2) a response subsystem program is initiated by the OBC; or (3) a command (or command sequence) will be initiated and the ground system notified that this action has occurred.

Ground notification will occur by a flag in the realtime telemetry data stream calling for an OBC memory dump containing the information.

A subset of this program is the S/C thermal and propulsion monitoring and control. Thermal sensors throughout the S/C are monitored as part of the normal telemetry data stream. Out of limits conditions in critical areas result in sampling of additional sensor points, command response (if possible) to correct the condition, and notification of the ground. Compensation heater control is also effected by status monitoring of the various S/C subsystems so as to maintain a desirable thermal balance. In the case of the propulsion system, sensor monitoring is used to tabulate the amount of fuel expended, and to monitor subsystem performance. A pressure check is made once per minute to assess fuel leakage and temperature variation. Out-of-limits conditions result in the shutting off of latching valves for proper feed isolation. Redundant engine heaters are selected in the event of extreme temperature indication. Orbit adjust and transfer thruster burns are monitored for out of limit conditions which require a pre-defined shutdown sequence.

3.1.7.5 Power Software

Power functions include load voltage and current monitoring, load power consumption monitoring, battery operating control, and power management.

Load voltage and current monitoring is performed by periodically examining sensors located at the output of the power module which monitor these parameters for each subsystem load. Out of limits conditions will result in load switching and ground notification. Capability for monitoring 10 loads is supplied.

Load power consumption is monitored, accumulated, and stored in amp-minutes used by the loads on an orbital basis. Abnormal changes in load demand are detected and treated as an alarm.

Battery operating control is accomplished by monitoring charge/discharge, operating point, and thermal parameters. Charge/discharge characteristics of each battery (up to five) are determined by accumulation of amp-minutes charged and discharged on an orbital basis. Charge and discharge rates of each battery are determined by OBC command. Battery operating point control for each battery is determined by assessing scheduled payload operating time, previous orbit charge/discharge history, and battery temperature. This permits high rate charging until full charge (amp-minutes returned equal to charge removed during previous discharge). After full charge is reached, subsequent overcharging is performed at a reduced current level. Maximum overcharge current is reduced for lower battery temperatures to avoid pressure buildup. Battery temperature is also monitored for out of limits condition. This results in OBC deactivation of the offending battery and notification of the ground through the alarm program.

3.1.8 ELECTRICAL INTEGRATION

The electrical integration subsystem consists of all intramodule harnessing and selected electronics not included in the three basic spacecraft modules.

3.1.8.1 Requirements

The requirements for the electrical integration subsystem are:

- Support the modular design of the spacecraft bus by minimizing the interfaces between modules and by providing capability for replacement of individual modules without impacting the others.
- Provide a command and telemetry data bus which will provide narrowband data retrieval and command control between the OBC (or ground station) and all modules.
- Provide a harness distribution philosophy for electromagnetic compatibility among the spacecraft signals (power, command and telemetry, timecode, standard clock, motor drive).
- Provide a grounding philosophy which minimizes spacecraft noise effects and provides adequate resolution for measurement of analog signals.
- Provide an interface which is compatible with mission unique requirements of

payloads.

- Provide an interface compatible with launch vehicle and launch pad support requirements.

3.1.8.2 Baseline Description

3.1.8.2.1 Functional

A block diagram of the spacecraft electrical system is given in Figure 3.1-76. This diagram shows the three basic modules comprising the spacecraft bus along with the reaction control system, the solar array and the signal conditioning and control module (SCCM). Although the solar array and SCCM configurations change from mission to mission, they are necessary for each mission and, therefore, are shown as part of the spacecraft bus. Their applicability to unique EOS-A requirements is discussed in Section 3.2.10.

The power module is a direct energy transfer system which provides a regulated +28 $\pm$0.3 VDC bus voltage to all spacecraft subsystems. Separately buffered outputs are provided to the ACS module, the C&DH module, and the SCCM. Six additional outputs are provided for use by mission unique modules. A tenth output provides heater power to all spacecraft modules. Each output monitors current and is protected against overload. All outputs, except the ACS and C&DH module outputs, are capable of being switched by the OBC or ground command. Each output is distributed by redundant twisted pair cables which maintain a maximum of 280 mv line drop to 100 w loads and 500 mv line drop to loads exceeding 100 watts. All return lines are referenced to a power ground within the power module which is maintained at equipotential with the spacecraft unipoint ground located on the structure transition frame. Command control and telemetry retrieval for the power module are performed via a single remote decoder/mux located within the power module and tied to the command and telemetry data busses. Table 3.1-30 shows the spacecraft bus load demand.

The C&DH module provides spacecraft tracking, on board control of all spacecraft and payload functions, and retrieval of narrowband and mediumband ($<$ 650 kHz) observatory

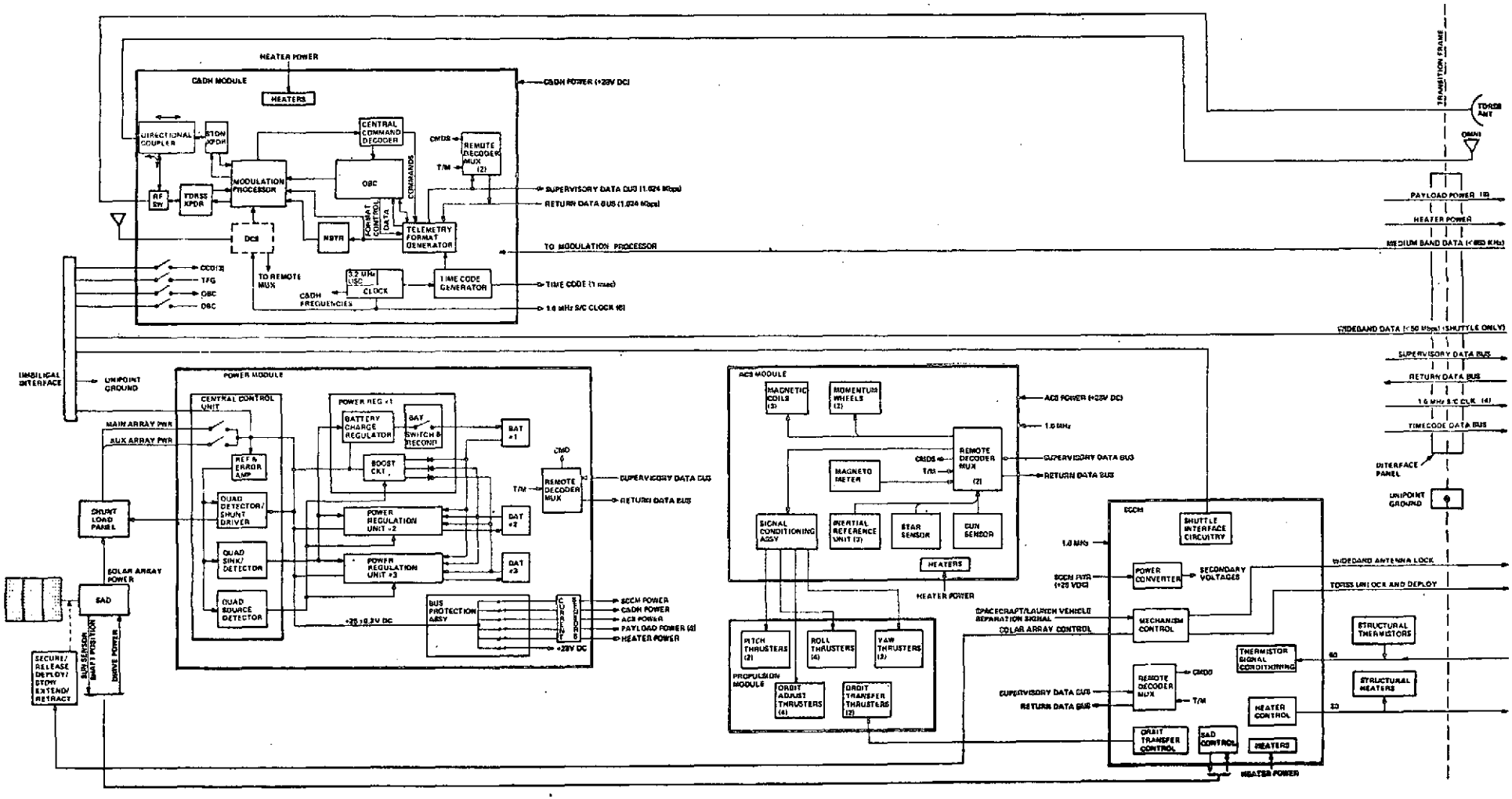

Figure 3.1-76. Basic S/C Block Diagram

Table 3.1-30. S/C Load Demand

Subsystem	Power	
	Launch	Orbital Average
ACS	52	37
C&DH	182	182
SCCM	0	74
RCS/OA	0	39

data. Commanding is accomplished via a supervisory data bus which addresses up to 32 remote decoder/muxes located in the various spacecraft subsystem modules. Capability exists for executing 2048 pulse commands and 128 serial magnitude (16 bit) commands. These commands may originate on the ground (up to 50 commands per second) or in the on board computer (up to 30K commands per second). (NOTE: Pulse commands are operationally spaced by 20 msec to permit adequate relay and logic drive pulse duration.) Commands are executed using the two supervisory data busses which transformer couple the TFG to the remote decoder/muxes by means of T2S cable. Only one of the busses is active at any time and operates at a continuous data rate of 1.024 Mbps. Telemetry data are retrieved from the remote decoder/muxes via the two redundant return data busses. Telemetry data are analog, bilevel, or serial digital and are obtained from any of up to 32 remote decoder/muxes. A total of 2048 different functions can be handled, with a maximum of 512 of these being serial digital. Analog to digital conversion is done in each remote referenced to the local user signal ground. The TFG formats these data into a 128 x n ($n \leq 128$) word frame consisting of 124 columns of sampled data (including four subcommutated columns). Synchronization and minor frame ID information are inserted into the remaining four columns. Timecode data are inserted into the first row of each major frame in the four subcommutated columns. Telemetry data are obtained via redundant return data busses which transformer couple the TFG to the remote decoder/muxes via T2S cable; however, data are returned on both busses at 1.024 Mbps simultaneously in response to each command on the supervisory bus. The TFG selects data from one of the two busses. The transmit and receive logic for both supervisory and

return data busses are referenced to the local module signal ground which, in turn, is tied to the spacecraft unipoint ground on the transition frame.

The C&DH module also provides the spacecraft with a standard 1.6 MHz clock frequency. Four separately buffered outputs are provided for support of the payload; one output is used by the ACS; one output is used by the SCCM. Each of these outputs is provided as a balanced output on 78 ohm twinax cable. Timecode data are provided on a redundant transformer coupled data bus (T2S) as a 35 bit word (3 sync; 32 data). This word represents milliseconds of a month and is reset to zero at 0000 hours GMT on the first day of each month.

The C&DH module will also accept a mediumband data ($\angle$ 650 kHz) sensor input on SCS cable. These data must be bi-phase encoded and referenced to signal ground at the source. The C&DH module applies these data to the STDN downlink in lieu of GRARR or other mediumband data.

Low loss coaxial cable is used to tie the C&DH module to the transponder(s) omnidirectional antenna and (if used) the TDRSS antenna (S-band feed). A third coaxial connection is provided for mating to the DCS antenna when a DCS is located within the C&DH module.

The ACS module provides the interface with the reaction control system in the propulsion module. A double shielded T2S cable is provided to each of the latch valves for providing reaction control based on OBC computations. The OBC obtains data from the ACS sensors and provides commands to the reaction devices via the command and telemetry data busses. Data are handled by a single remote decoder/mux in the ACS module.

The signal conditioning and control module (SCCM) contains a number of circuits which are unique to each mission. The EOS A circuits are defined in Paragraph 3.2.10. In addition to the mission peculiar circuits, the SCCM contains a number of standard circuits applicable to all missions. These include structure heater control, structure

thermistor signal conditioning, solar array drive control (functionally necessary for all but fixed array missions), adapter separation, solenoid drivers, and pyro drivers. Twenty separate heater control circuits and 60 thermistor signal conditioning circuits are provided. Each output consists of a twisted pair of wires which is tied to the heater or thermistor on the structure. All remaining circuit components are contained within the SCCM and interface directly with the remote decoder/mux. Solar array drive control is accomplished by generating a clock drive which is fed to redundant stepper motors which keep the array pointed to within ± 5 degrees of the sun during the daylight portion of each orbit. The drive is unidirectional and can be stopped or operated at eight times the normal rate. Automatic control of the drive is accomplished using feedback from a sun sensor on the paddle shaft. Adapter separation is effected with pyro drivers activated by a signal from the booster. Ten solenoid firing circuits are provided. These circuits are redundantly activated by two independent firing busses. Ten pyro drivers are also available for missions that require them. These circuits are activated the same as the solenoid drivers. Both the solenoid driver and pyrodriver outputs are twisted pair, couble shielded cables.

All spacecraft harnessing is separated by function (power, command and telemetry data busses, timecode and clock frequencies, solenoid and pyro drive signals, stepper motor signals, heater and thermistor signals, coax) for wrapping with copper tape shielding. This minimizes EMI and permits close proximity routing of harnesses containing dissimilar signals. Shields are tied to the chassis of the user subsystem for all signals less than 100 kHz, except for cables carrying currents in excess of 5 amps for periods less than 100 msec (pyro and solenoid drives) which have the external shield tied at both ends. Signals in excess of 100 kHz also have shields tied to chassis at both ends.

All components within each spacecraft module have their cases electrically tied to the module which is, in turn, electrically tied to the spacecraft frame. All components, with the exception of RF devices, provide isolation between power and signal grounds by means of a DC/DC converter in the power input circuit. All power grounds (primary return of DC/DC converter) are tied to a single power return in the module and then

returned to the spacecraft power ground in the power module, which is solidly tied to the spacecraft unipoint ground on the transition frame. All signal grounds within a module are tied to a single signal return in the module and then returned directly to the spacecraft unipoint ground. Figure 3.1-77 shows the spacecraft grounding concept.

A signal interface panel is provided on the transition frame for the purpose of distributing signals to the mission peculiar equipment. The contents of this panel are given in Table 3.1-31.

An umbilical interface panel is provided to support launch and/or shuttle inputs/outputs. The contents of this panel are given in Table 3.1-32.

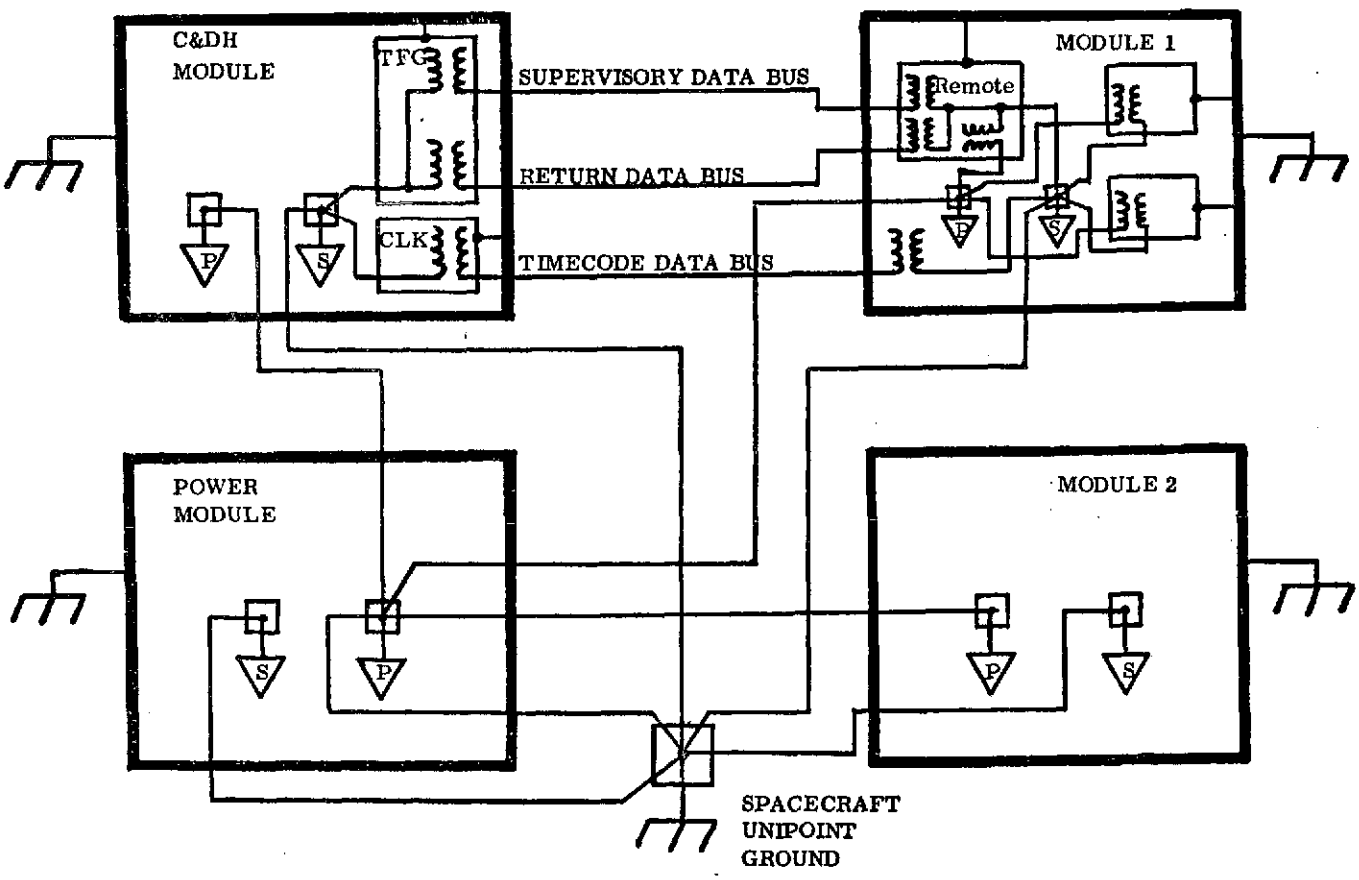

Figure 3.1-77. Grounding Concept

Table 3.1-31. Transition Frame I/F Panel

Signal	No. of Pins	Cable Type
Module Power (redundant)	12 + 12 RTN	T2
Heater Power (redundant)	2 + 2 RTN	T2
Supervisory Data Bus (redundant)	2 + 2 RTN	T2S
Return Data Bus (redundant)	2 + 2 RTN	T2S
Timecode (redundant)	2 + 2 RTN	T2S
1.6 MHz Clock	4 + 4 RTN	Twin-ax
Mediumband Data	1	SCS
Wideband Data	1	Coax
RF Signal (Spare)	2	Coax
Spare	10	---

Table 3.1-32. Umbilical I/F Panel

Signal	No. of Pins	Cable Type
Battery Conditioning	2 + 2 RTN	T2
Command Input (digital)	1 + 1 RTN	T2S
Data Output (digital)	1 + 1 RTN	T2S
OBC I/F	2 + 2 RTN	T2S
C&W (Shuttle)	25	SCS
Command Control	10 + 10 RTN	T2S
Unipoint Ground	5	SC

3.1.8.2.2 Hardware

The only component involved with the electrical integration system is the Signal Conditioning and Control Module (SCCM). This component is 6 x 10 x 12 inches and weighs 20 pounds. It is located on the transition frame.

The SCCM contains twelve circuit boards which plug into a mother board. These boards are designed such that standard and mission unique circuits can be separated. Board configuration is as follows:

- Structure Heater Control (Standard)
- Structural Thermistor Signal Conditioning (Standard)
- Adapter Separation (Standard)
- Solenoid Drivers (Standard)
- Pyro Drivers (Standard)
- Solar Array Drive Control (Unique for each mission)
- Six Mission Unique Boards
- Mother Board (Unique for each mission)

The component packaging is standard for all missions, even though board circuitry varies.

3.1.8.2.3 Follow-on Mission Accommodation

The electrical system harnessing and grounding concepts are not greatly affected by changing mission requirements in that standard interfaces and data bus distribution of signals are incorporated in the standard spacecraft bus configuration. The number and location of heaters and thermistors will change depending on the mission thermal design, but all are serviced through a standard interface on the SCCM. Accommodation of solenoid and pyro drive requirements is similar. TDRSS capability is supplied with a single coaxial connection between the C&DH module and the S-Band feed of the TDRSS antenna. Of course, considerable impact on SCCM board circuitry is necessary to provide mission unique deployment/retraction circuitry, solar array drive, gimbal drive, shuttle interface, etc. A description of the EOS-A SCCM circuitry is given in Section 3.2.10.

3.2 EOS-A SPACECRAFT AND MISSION PECULIAR EQUIPMENT

This section describes the baseline design of the EOS-A spacecraft. The overall spacecraft configuration and system interfaces are described in Section 3.2.1. The remaining sections describe the mission peculiar equipments required for the EOS-A mission as shown in Figure 3.2-1 and any specific adaptations of the basic spacecraft equipment discussed in Section 3.1. The section is organized as follows:

Section	Topic
3.2.1	EOS-A Baseline Configuration
3.2.2	Structure and Mechanisms
3.2.3	Thermal Control
3.2.4	Propulsion Subsystem
3.2.5	Wideband C&DH Subsystem
3.2.6	ACS Module
3.2.7	Power Module and Solar Array
3.2.8	C&DH Module
3.2.9	Mission Peculiar Software
3.2.10	Electrical Integration

3.2.1 EOS-A BASELINE SPACECRAFT CONFIGURATION

The Baseline EOS spacecraft has been configured for launch by the 2910 Delta booster using the standard eight foot diameter fairing, and has the capability for retrieval by Shuttle. The Baseline mission payload consists of the five band MSS and Thematic Mapper instruments. An eight foot deployable gimballed antenna is provided for direct communication with TDRSS spacecraft. The Baseline design has outstanding design flexibility to accommodate alternate missions including Shuttle resupply as discussed in Section 3.3 of this report.

The EOS modular spacecraft design as illustrated on Figure 3.2-2 has an aft Subsystem or "Bus" section and a forward Instrument section. The Bus section consists of a core structure supporting Attitude Control (ACS), Power, and Command and Data Handling (C&DH) subsystem modules, the Propulsion Module, and the Solar Array Drive. The aft end of

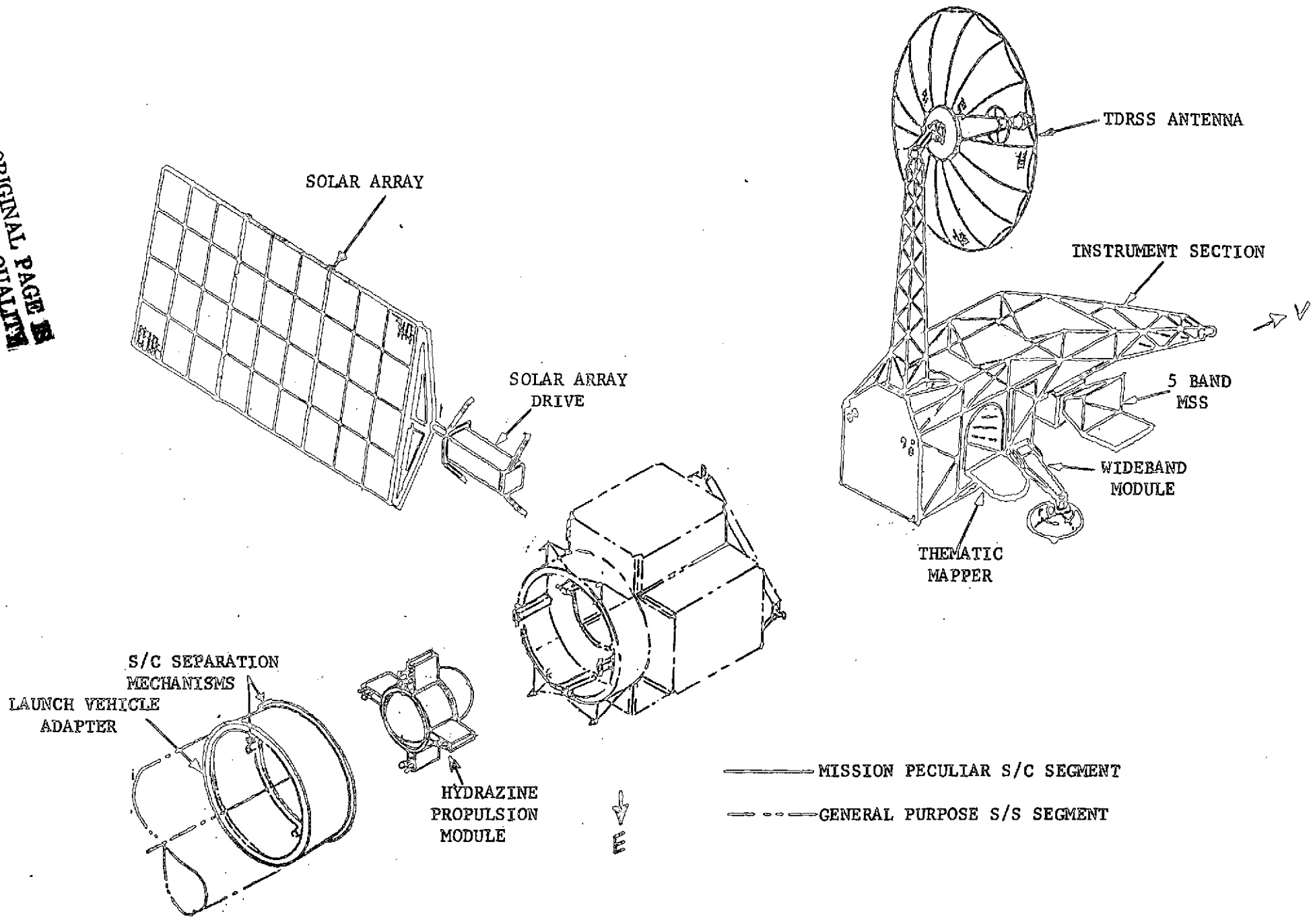

Figure 3.2-1. Mission Peculiar Spacecraft Segment

ORBITAL CONFIGURATION

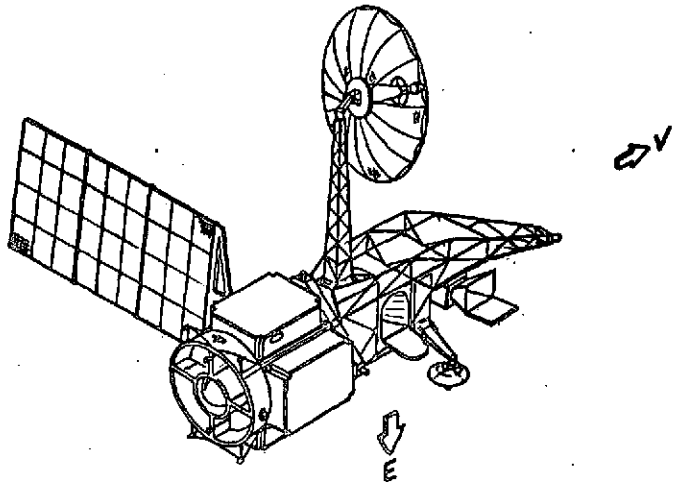

LAUNCH CONFIGURATION

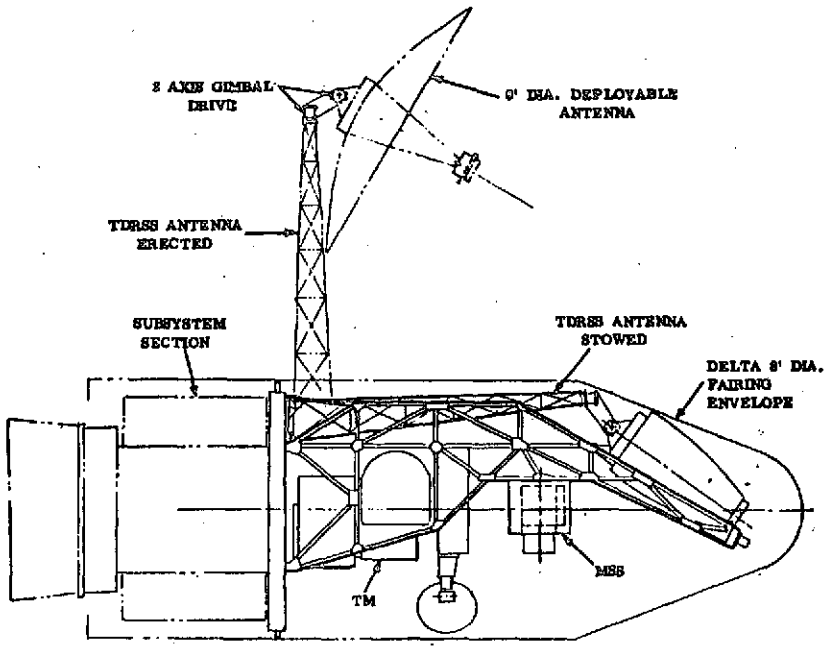

EXPLODED VIEW

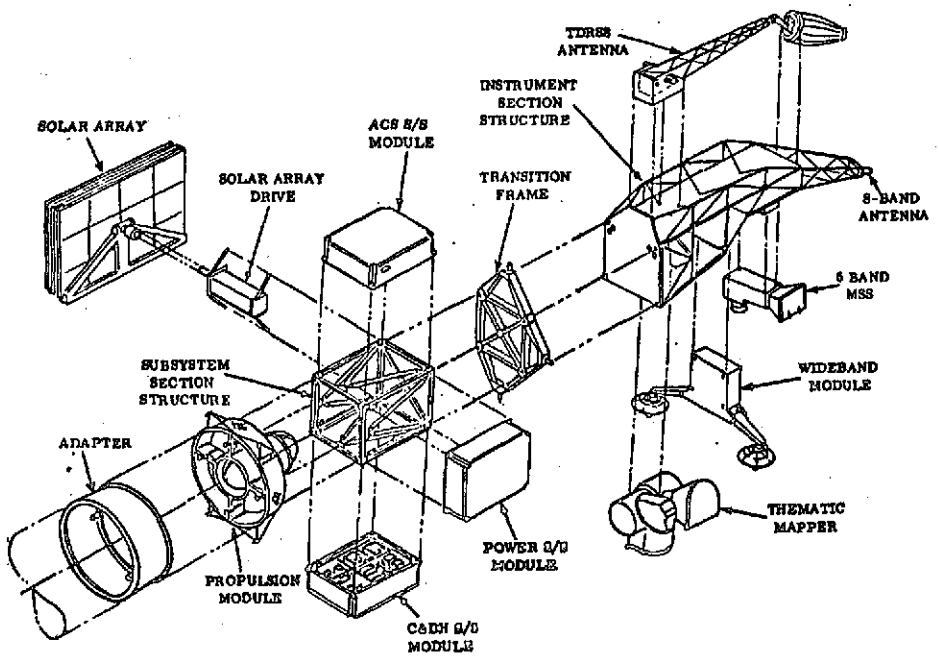

Figure 3.2-2. Baseline EOS Spacecraft (2)

the Propulsion Module is attached to a conventional conical adapter via a Vee Band separation joint for Delta or Titan launch. A three point transition frame is located between the Subsystem and Instrument Sections for Shuttle support for launch or retrieval. The folded solar array is stowed on the Spacecraft side opposite the Power Subsystem module.

The Spacecraft configuration layout is shown on Figure 3.2-3 for the Delta launch vehicle. The Delta fairing imposes the most severe space constraints and has dictated the overall spacecraft geometry. Cross section arrangements of the Subsystem and Instrument Sections are shown on Figure 3.2-3 and the Delta Fairing geometry is shown on Figure 3.2-4.

The Subsystem Modules and the folded solar array form a central cavity housing the propulsion tanks and solar array drive. This rectangular arrangement was selected for the Subsystem Section to provide maximum space utilization within the 86 inch diameter Delta shroud envelope. Subsystem modules, sized to fit this arrangement, are 40"W x 16"H x 48"L. This module size contains all subsystem components and includes adequate growth capability for advanced missions.

The Instrument Section arrangement positions the TM and MSS instruments to provide a clear field of view toward earth for sensor apertures and toward space on the anti-sun side for the instrument radiation coolers. The wideband module is positioned between the TM and MSS to provide a clear field of view for the deployed antennas. Two 1.7 foot diameter, 2 axis gimballed deployable antennas, and a single fixed Low Cost User antenna are provided for wideband communications. An eight foot diameter furlable antenna mounted to a two axis gimbal drive and deployable boom is provided for TDRSS, and is stowed above the instruments.

The solar array drive is mounted to the forward end of the Subsystem Section and the array is folded alongside the Subsystem and Instrument sections. This stowage arrangement results in a wider, shorter, deployed array with adequate growth capability for advanced missions requiring a higher output array.

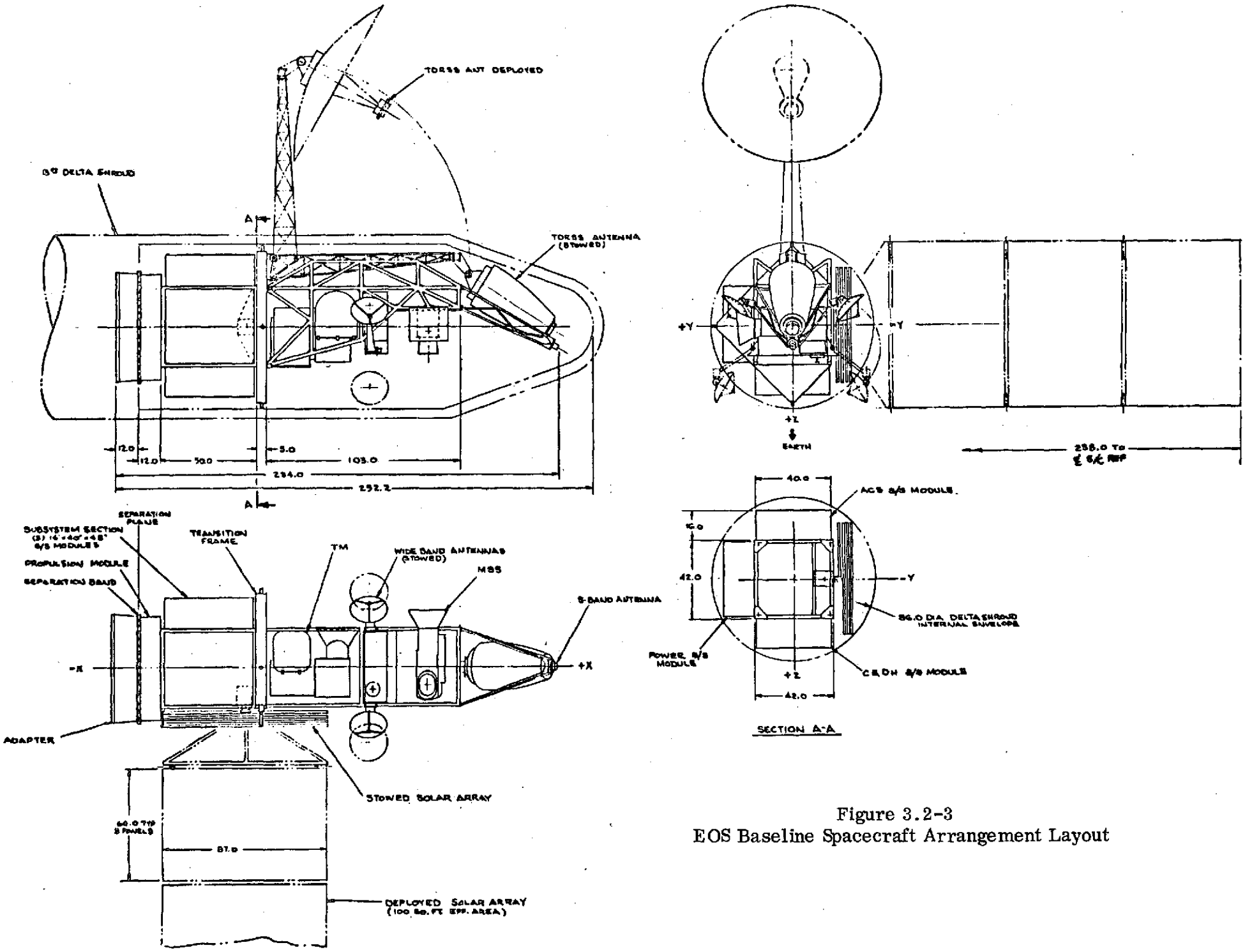

Figure 3.2-3
EOS Baseline Spacecraft Arrangement Layout

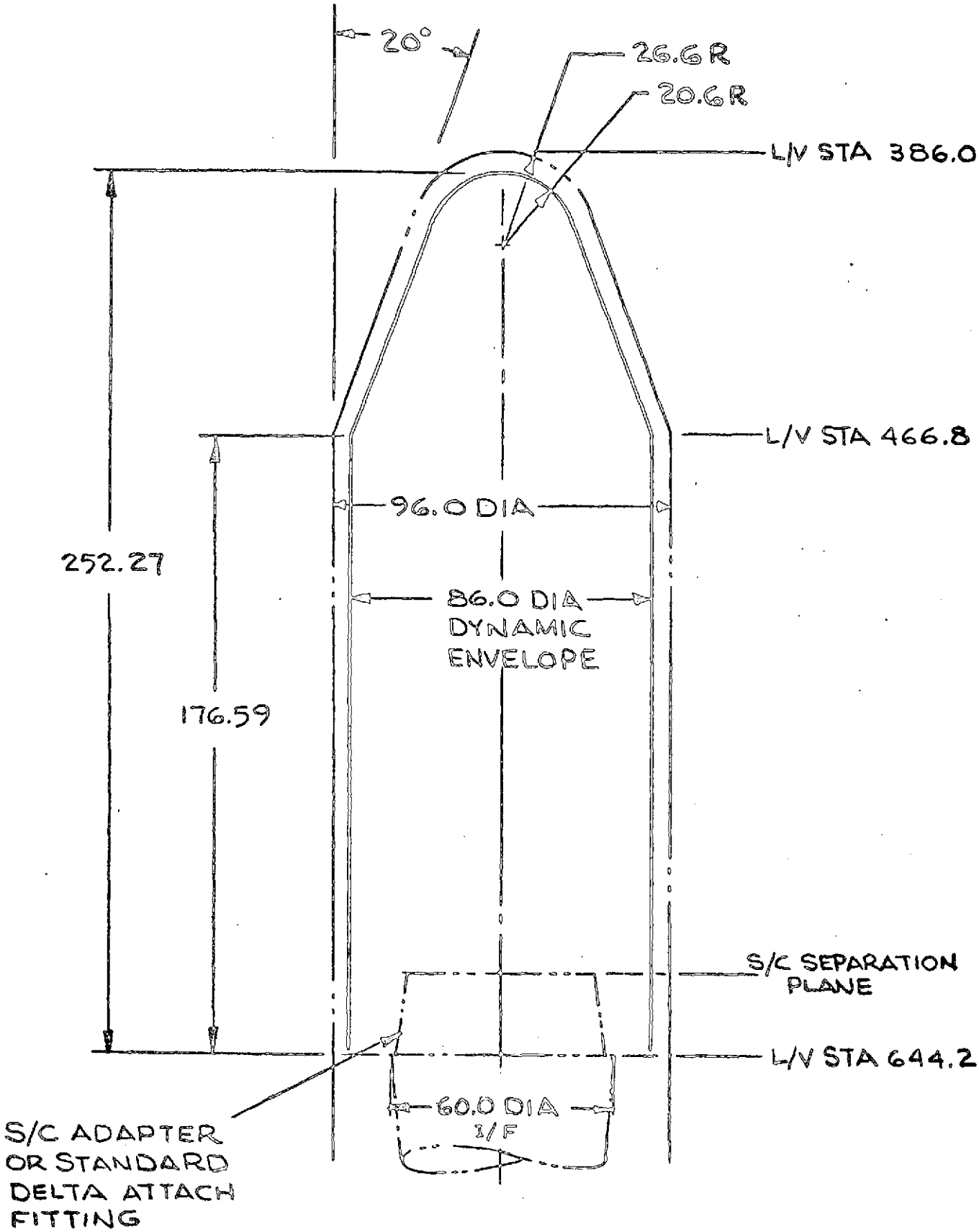

Figure 3.2-4. Delta Launch Vehicle Fairing Envelope and S/C Interface

For Shuttle launch or retrieval the spacecraft is supported at the Transition Frame separating the Subsystem and Instrument sections as shown on Figure 3.2-5. For retrieval, large appendages such as the Solar Array and TDRSS antenna are retracted and retained, and a back-up jettison capability is provided. Note that the reference design spacecraft has not been designed for resupply but does include provisions for launch or retrieval by Shuttle. The basic modular design can be adapted for resupply by the addition of resupply latches and electrical disconnects on the subsystem modules and by use of separate modules housing each instrument. These provisions have not been incorporated due to the excessive weight penalty ($\approx$ 400 lbs.) which would limit the use of the Delta launch vehicle for the Pre-Shuttle missions.

The normal EOS launch and deployment sequence, shown on Figure 3.2-6, consists of the following events:

1. Launch by the Delta 2910; spacecraft stowed with appendages folded and restrained.
2. Fairing separation by the L/V after exit from the atmosphere.
3. Booster Separation using the proven Vee-band and spring separation system.
4. Sequenced deployment of the solar array, wideband antennas and TDRSS antenna.
5. Opening of instrument sensor and cooler covers to complete deployment.

The EOS Orbital Configuration, Figure 3.2-7, shows the spacecraft with the solar array deployed and sensor and cooler covers opened. The S-Band antenna is mounted forward giving 90% spherical coverage from a single antenna. Note that all non-radiative external surfaces of the spacecraft will be covered with insulation blankets which have been omitted to show equipment installation details. Sensor and antenna Fields of View are shown on Figure 3.2-8.

Table 3.2-1 lists weights for the Baseline configuration subsystems and major assemblies.

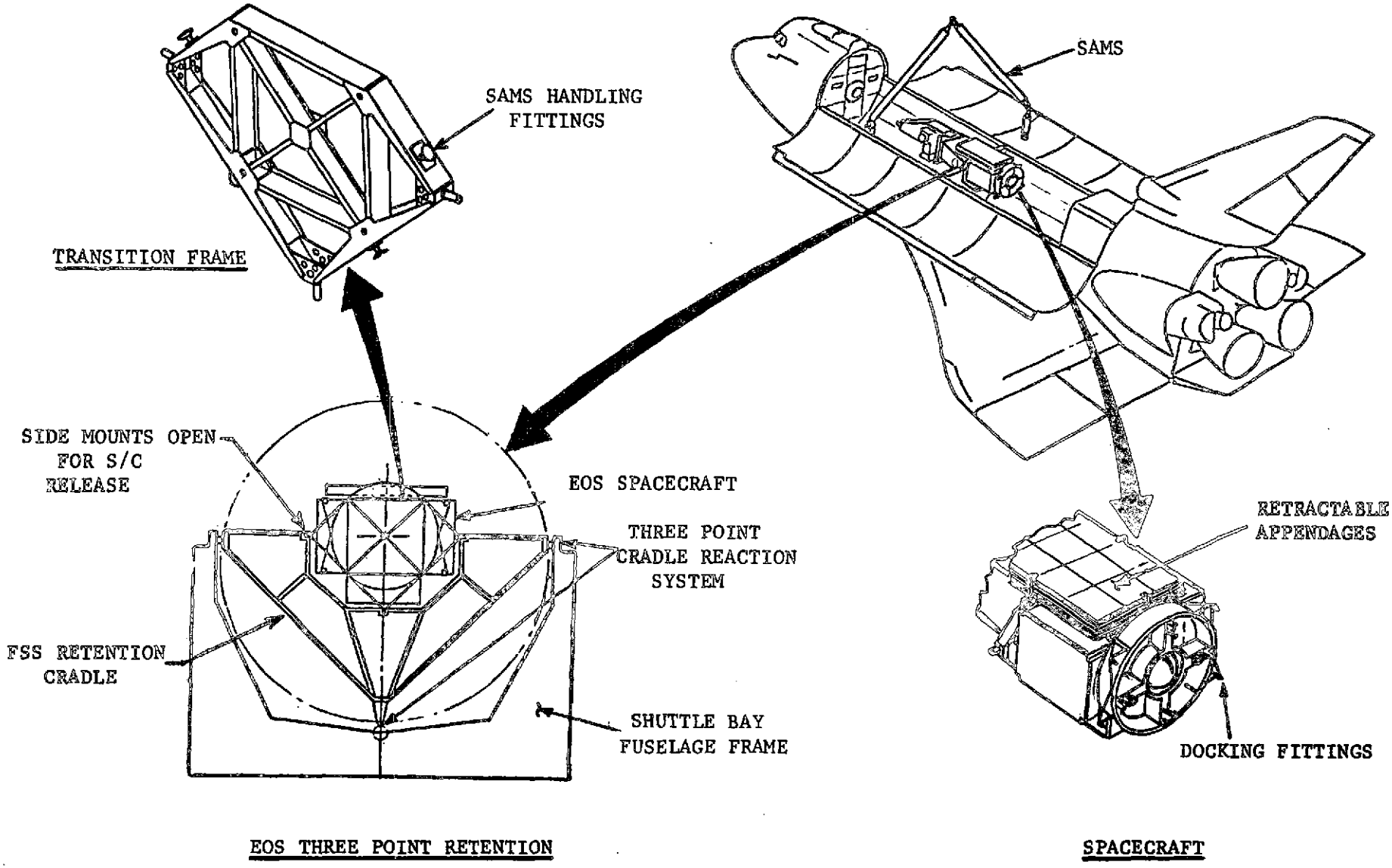

Figure 3.2-5. Shuttle Launch/Retrieval Provisions

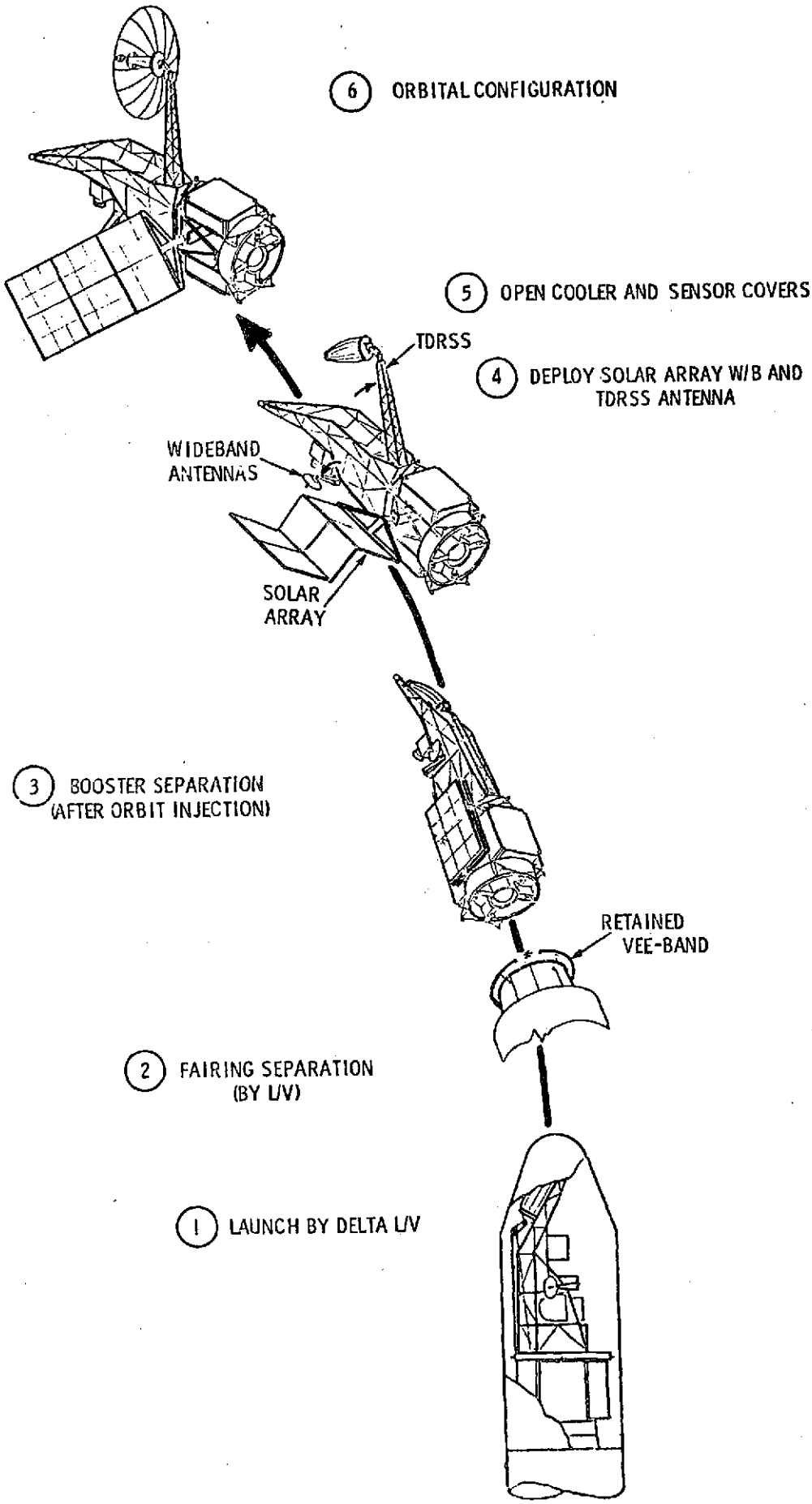

Figure 3.2-6. EOS Deployment Sequence

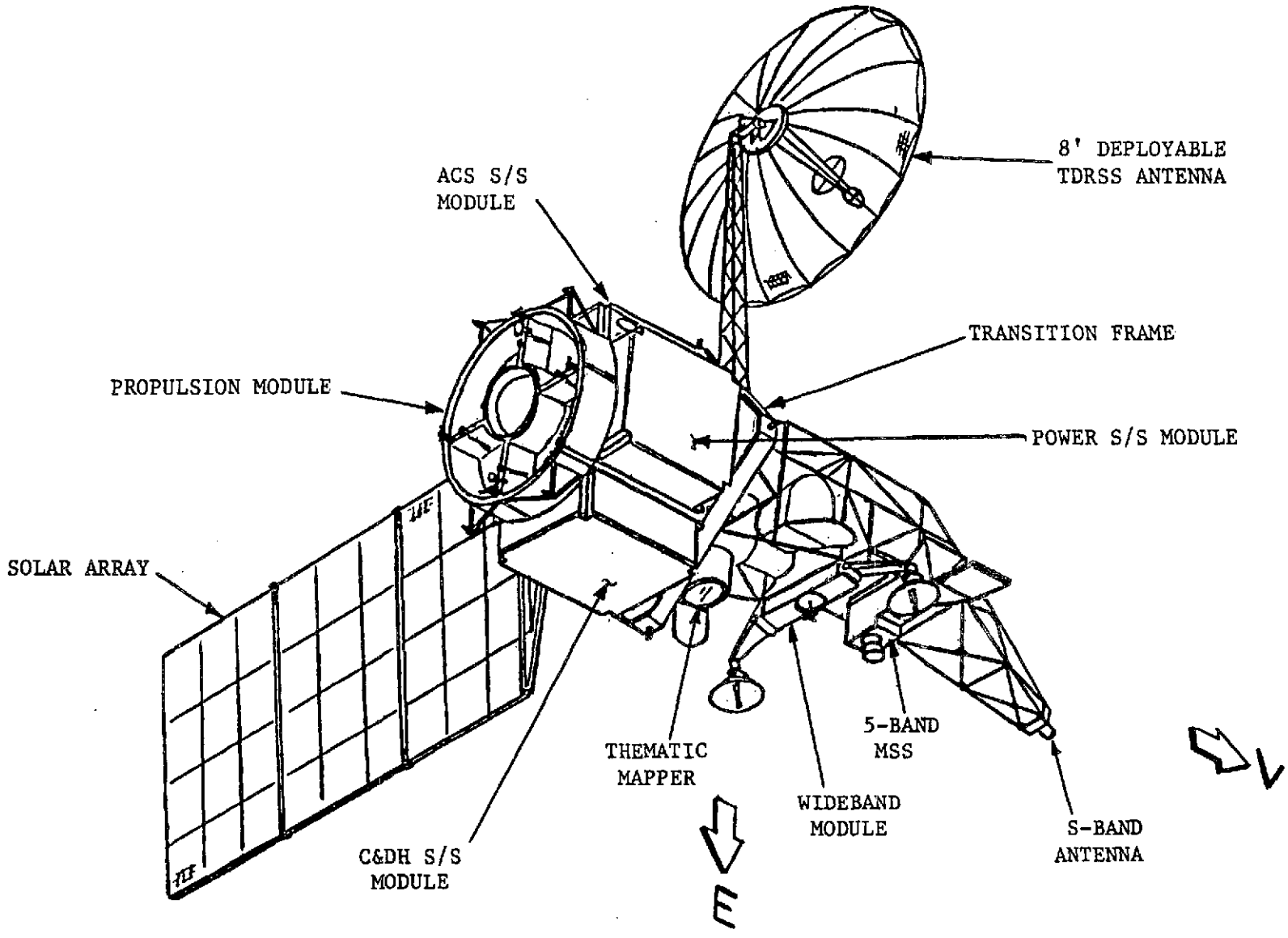

Figure 3.2-7. EOS Baseline Spacecraft Orbital Configuration

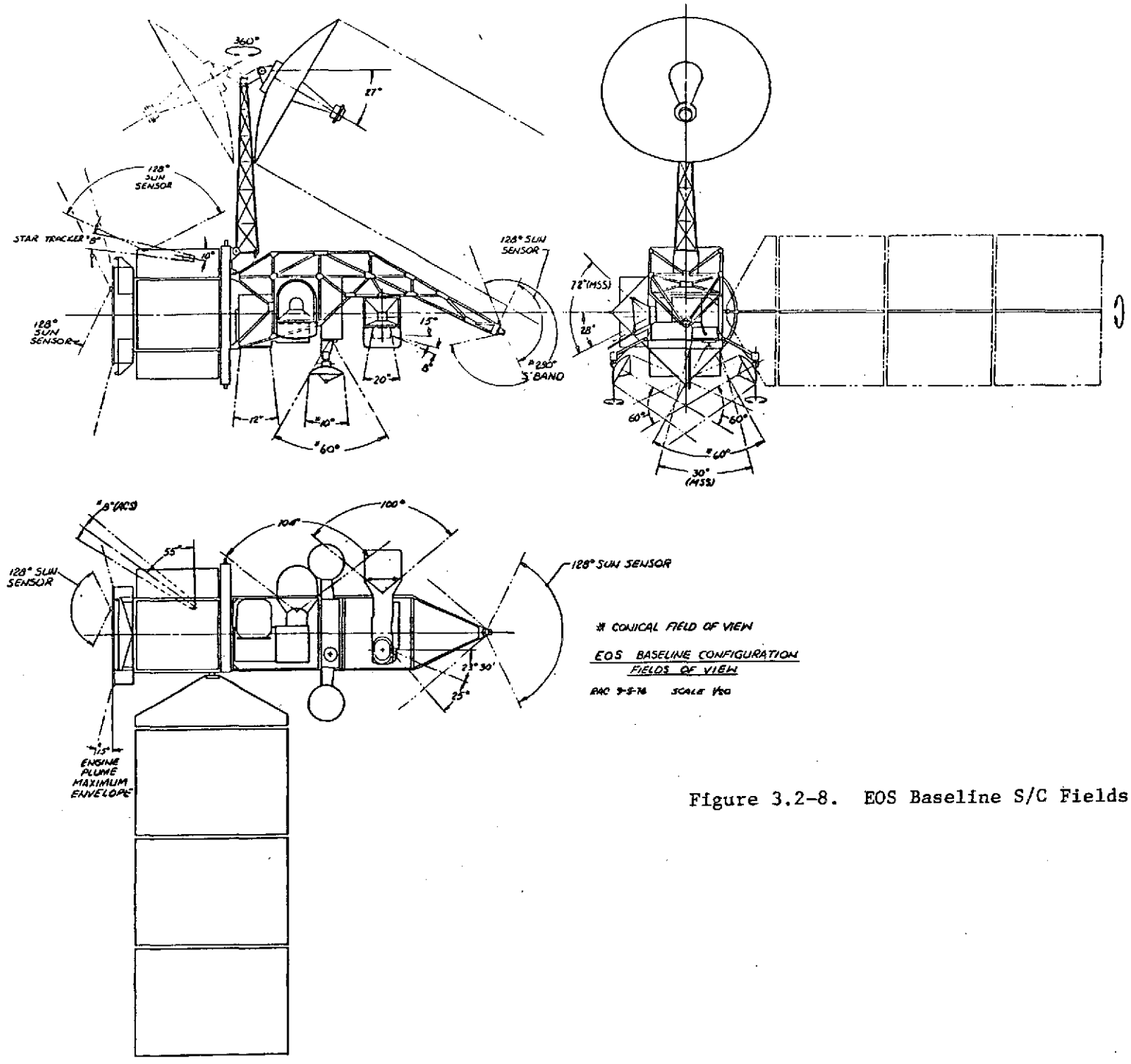

Figure 3.2-8. EOS Baseline S/C Fields of View

Table 3.2-1. EOS Baseline Configuration Weight Breakdown (Pounds)

Basic Spacecraft		(1115)
Structure & Modules	360	
Attitude Control	90	
Power	222	
Communications & Data Handling	184	
Harness & Signal Conditioning	110	
Thermal	38	
Pneumatics	40	
Adapter	71	
Total Mission Peculiar		(762)
Structure	185	
Solar Array & Drive	114	
Harness & P/L Remotes	35	
Thermal	29	
Orbit Adjust	45	
Orbit Transfer	145	
Wideband Comm.	134	
TDRSS	75	
Payload		(505)
Thematic Mapper	350	
MSS	155	
Weight Contingency		(200)
TOTAL SPACECRAFT		2582 (1171 Kg)

3.2.2 STRUCTURE AND MECHANISMS

The Mission Peculiar Spacecraft Segment consists of the following spacecraft elements which, when combined with the General Purpose Spacecraft Segment (GPSS), form the completed spacecraft.

- Launch Vehicle Adapter (including separation)
- Instrument Support Structure
- Wideband Module
- Propulsion Module
- Solar Array and Drive
- TDRSS Antenna Assembly

Structural criteria discussed for the GPSS in Section 3.1.1 is also applicable to these items.

All spacecraft deployable items are Mission Peculiar and standardized actuation mechanisms applicable to these functions are covered in this Section.

3.2.2.1 Launch Vehicle Adapter and Spacecraft Separation

Adapters for Delta and Titan boosters are shown on Figure 3.2-9. Both adapters shown use a 57" Vee-band and spring cartridges for separation. For Delta applications the existing 5724 MDAC design, 24" in length could be employed, or a new 12" long adapter based on the 5724 design, could be used if additional clearance is required. The Titan adapter is of aluminum stiffened sheet construction with 18 attach bolts at the 112" diameter Titan interface.

The Vee-band separation system, flight proven on the Nimbus and ERTS spacecraft, is used for booster separation. The Vee-band, Figure 3.2-10, radically clamps the spacecraft and adapter together, providing a uniform path for launch load transfer. The joint is pre-loaded to prevent any gapping underload and is separated by pyro activated redundant bolt cutters on the band. The separation band halves are retained on the adapter after separation to eliminate any space debris.

Separation velocity is achieved by the use of spring assemblies that are adjustable so that the center of gravity offsets in the spacecraft and the launch vehicle can be compensated for by an intentional offset in the separation force vector for minimum tip-off. The energy storage requirements for the separation springs can be calculated from the equations for the conservation of energy and conservation of linear momentum. A typical spring cartridge design is shown on Figure 3.2-10.

Separation switches are mounted on the spacecraft side of the separation interface to permit arming of pyros for subsequent functions and to provide a telemetry verification of separation. These switches are wired in a quad-redundant circuit to assure operation at separation as well as to prevent premature activation prior to receipt of the separation signal.

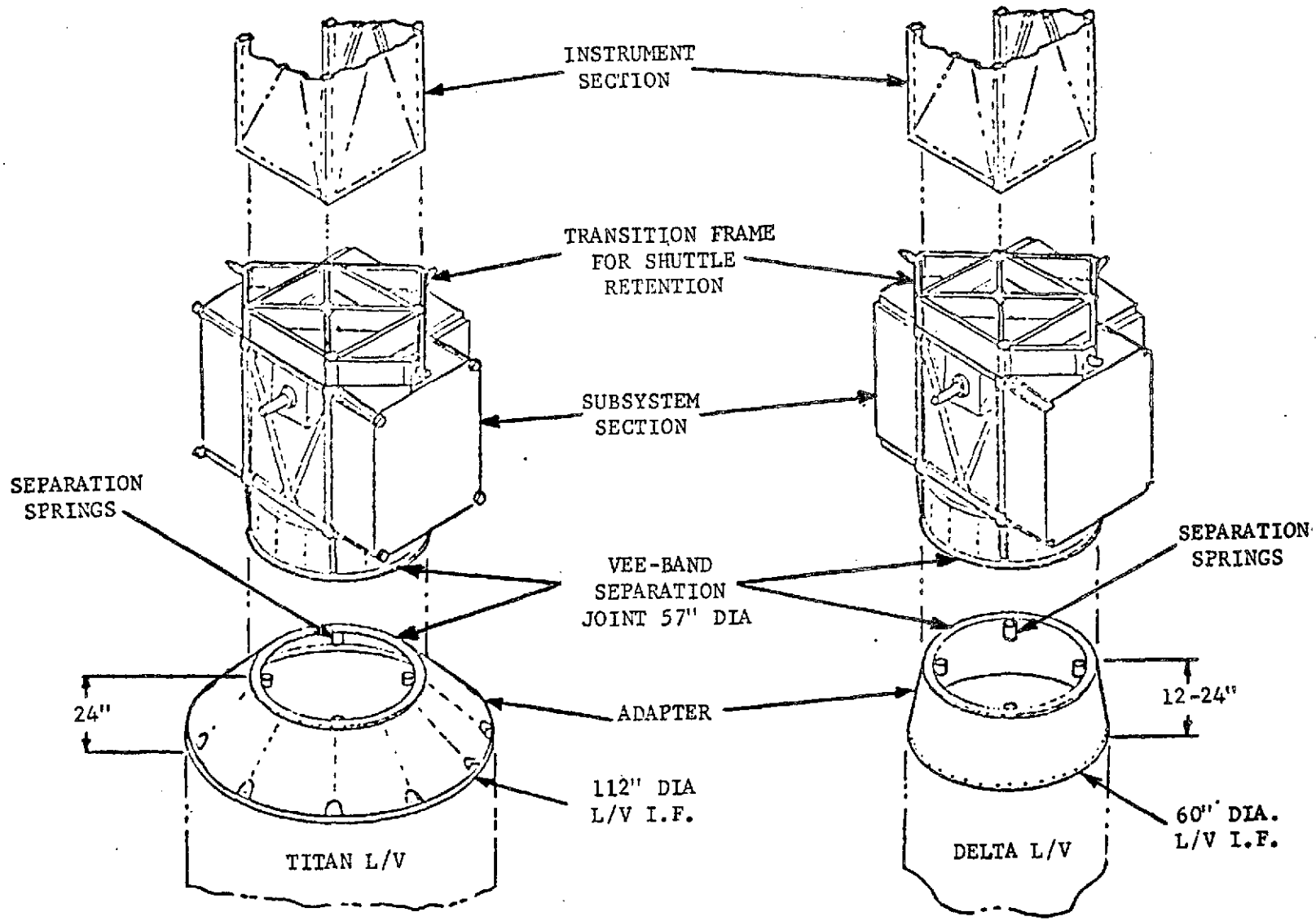

Figure 3.2-9. Launch Vehicle Adapters

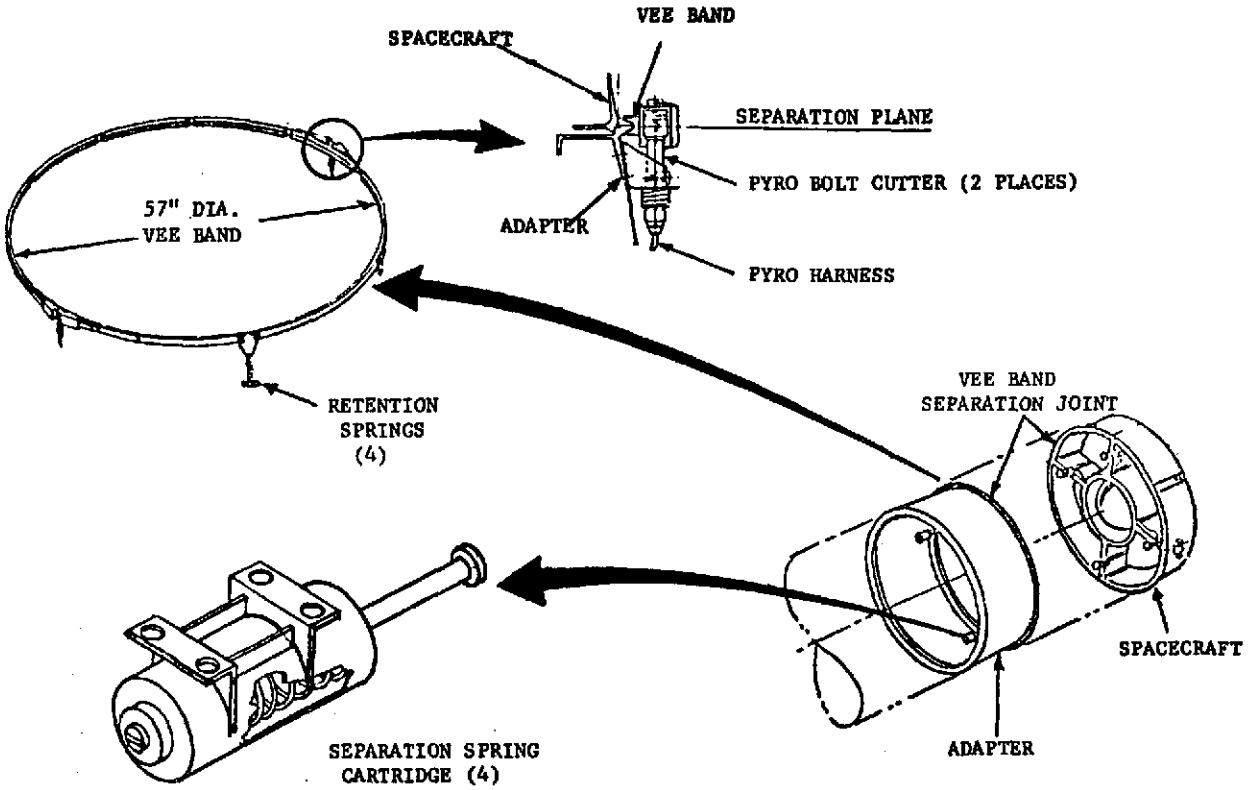

Figure 3.2-10. Spacecraft Separation Components

3.2.2.2 Instrument Section Structure

The EOS Instrument Section mounted to the forward face of the Transition Frame is a mission unique structure configured to support the specific mission payloads. The structural arrangement and construction of this section for the Thematic Mapper and MSS instruments is shown on Figure 3.2-11.

The basic structural frame is constructed of welded 6061 square aluminum tubing. The Thematic Mapper is supported in the aft compartment by a three-point mount rigidly bolted to the truss structure. An aluminum honeycomb mid-bulkhead and forward horizontal shelf are provided to support the Wideband Module and the MSS instrument. A fixed tubular truss positions the S-band antenna forward for maximum antenna coverage. Note that all external surfaces will be covered with insulation blankets to maintain instrument thermal control and to minimize structural thermal gradients. The entire section is bolted to the forward face of the Transition Frame at the four corner attach fittings.

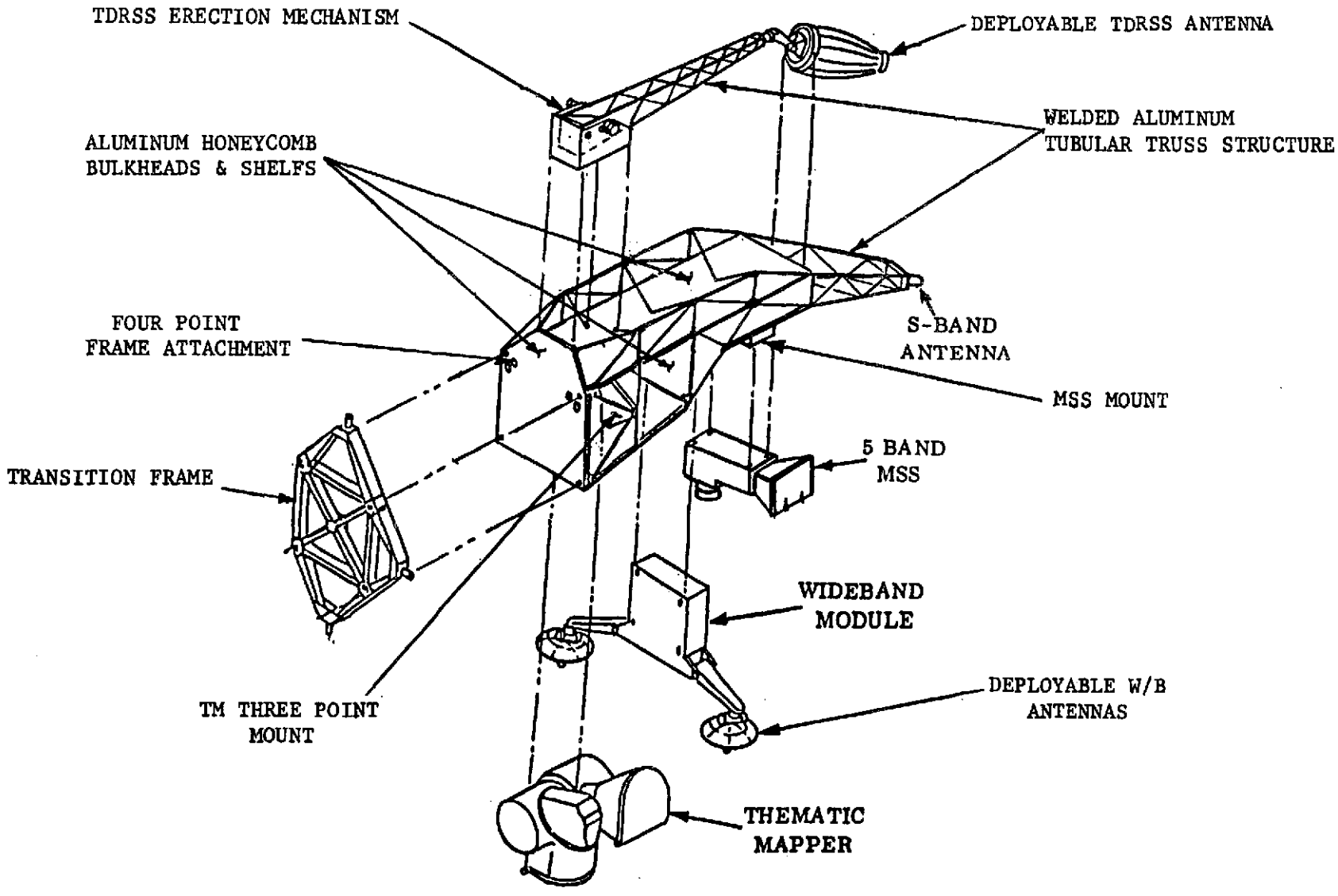

Figure 3.2-11. Instrument Support Structure

Structural details and geometry of the Instrument Section structure are shown on Figure 3.2-12.

Welded 6061 aluminum truss construction was selected for this section since it provides the most efficient and lowest cost structure to accommodate the varying mounting and orientation requirements of the instruments and equipment. The truss structure is also the most compatible with the Transition Frame and Subsystem Section four point carry-thru arrangement providing overall structural continuity for the spacecraft. Note that the TM mount is directly supported at the truss base Transition Frame attach points and one bay of the side truss is open for the TM cooler. Loads are redistributed around this opening by the extended upper truss members. All body side loads are carried by the aluminum honeycomb shelf between the upper longerons since the lower sections are open to accommodate installation of the TM and the wideband module. Aluminum honeycomb sandwich was selected for bulkhead and shelf construction to provide a stiff non-buckling path for lateral loads, and to accommodate concentrated out-of-plane reactons from the equipment with a minimum of backup bracketry.

The TDRSS antenna assembly consisting of the antenna, gimbal drives, boom, and erection mechanism is mounted to the aluminum honeycomb upper shelf over the instruments. The hub of the furrled antenna is secured to the structure during launch by a pyro or electrically activated launch lock, and the base including the deployment mechanism is rigidly attached to the upper shelf and aft bulkhead structures.

3.2.2.3 Standardized Actuators

There are a number of rotary and linear actuations required on the EOS spacecraft for such functions as solar array retention and deployment, antenna deployment and cover drives. The development of three standard actuators has been evaluated and selected vs. custom designs for these tasks. Excess size and weight, in some cases, has been traded off for the cost benefits of using a standard device.

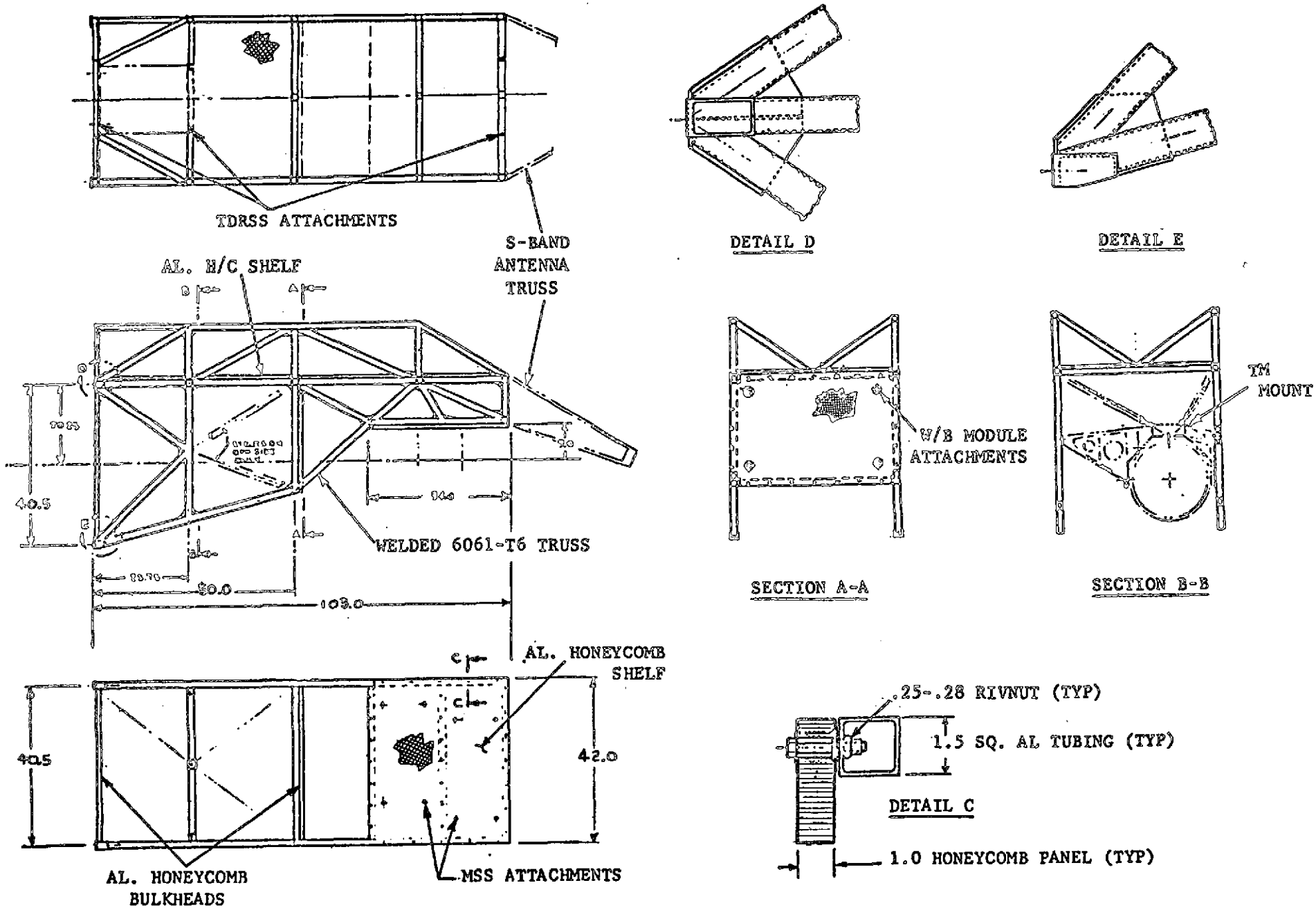

Figure 3.2-12. EOS Instrument Section Layout

Three standard actuators are used (see Figure 3.2-13):

Type A Actuator - Rotary

Type B Actuator - Linear

Type C Actuator - Hinge/Latch Release.

Type A and B actuators both use a stepper motor and harmonic speed reducer which has been developed for long life space applications. The output stage of the Type A actuator is a rotating shaft. The output stage of the Type B actuator is a shaft with axial motion only. The Type C actuator is a latching and release device which causes the latch to open with a rotary solenoid and/or sets the latch up for subsequent latching operations upon command. It has an optional feature of being operable by SAMS using an exterior rotary knob.

Table 3.2-2 shows typical output performance and possible applications of these devices. These standardized actuator designs in essence carry the modular concept of the spacecraft into the area of mechanisms. The Type A and Type B units are designed to have a motor stage and an intermediate gear stage basically identical to these two parts in the solar array drive. The actuator is completed by adding either a rotary or a linear output

Table 3.2-2. Actuator Performance Requirements

ACTUATOR	OUTPUT		APPLICATION
	SPEED	TORQUE	
Type A (rotary)	9°/sec	6 ft lbs	Array Deployment Array Extend/Retract
Type B (linear)	3"/min	600 lbs	(1) Array Deployment (1) TDRS Antenna Deployment (1) Wideband Antenna Deployment (1) SAR Deployment (1) Instrument Cover Actuator
Type C (latch)	10 lbs release force		(4) Array Launch Retention (4) Array Hinge Latch Release (2) SAR Latch Release (2) Wideband Antenna Stow/Lock (2) TDRS Lock Release

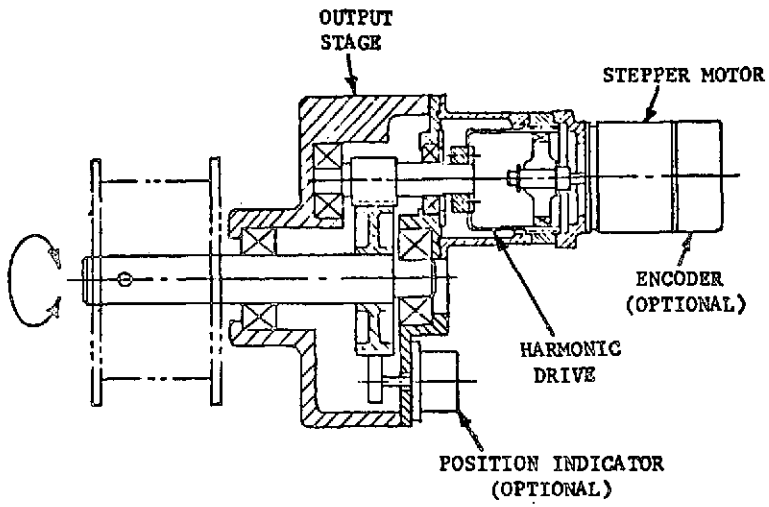

TYPE A
ROTARY ACTUATOR

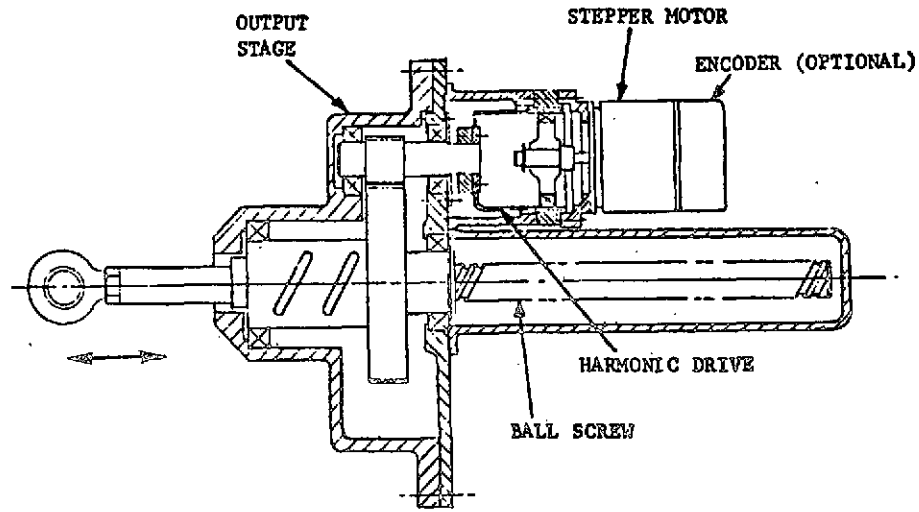

TYPE B
LINEAR ACTUATOR

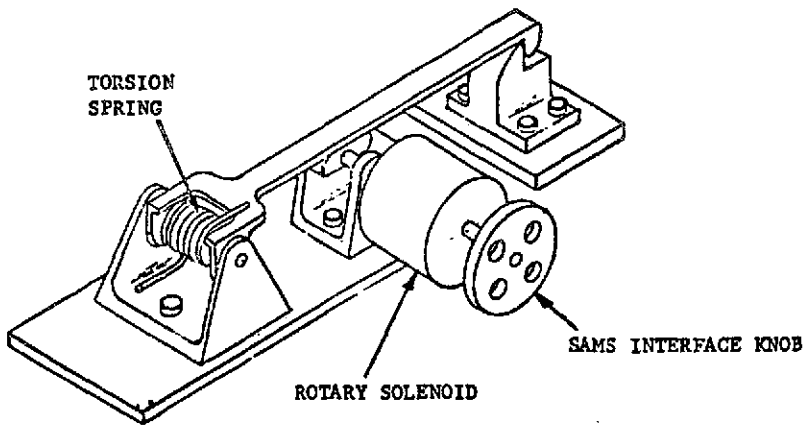

TYPE C
STANDARDIZED LATCH

- REMOTE CONTROL
- REDUNDANT SAMS CONTROL

Figure 3.2-13. Standardized Actuators

stage. A fitting in the output flange provides for the addition of a feedback or position indicating potentiometer as may be required. Output forces, torques, and speeds can be sized, in most cases, to handle a number of applications, using the step rate (pulse per second) to the motor as a control variable for specific functions.

The stepper motor/harmonic drive combination has some significant advantages, namely:

- controllable speed
- finite rotation even with open loop control
- ability to hold load in position without applied power
- compact and low weight
- low power requirement.

The Type C (latch release) device is designed to provide a simple means of opening a spring closed latch with a common approved and available device, the rotary solenoid. By providing a ratchet effect in the cam drive, it can hold the latch open or closed without power and requires only one or two pulses to change state. These types of solenoids have been used on Apollo with success and will be used on the SOYUZ mission.

3.2.2.4 Wideband Module

The wideband module is attached to the Instrument Section mid bulkhead and houses the electronic components in a built-up aluminum box structure similar in construction to the GPSS subsystem modules. Two 1.7 ft. diameter gimballed antennas are mounted to the module sides and deploy outward and latch for antenna operation. The wideband module layout is as shown on Figure 3.2-14.

Mechanisms required for the wideband module are the antenna latching and deployment devices and the two axis gimbal assembly.

For antenna deployment the standard rotary actuators described previously are used. A pyro activated latch is used for launch retention since the antennas deploy and lock, and are not retracted during any future Shuttle retrieve or servicing operations.

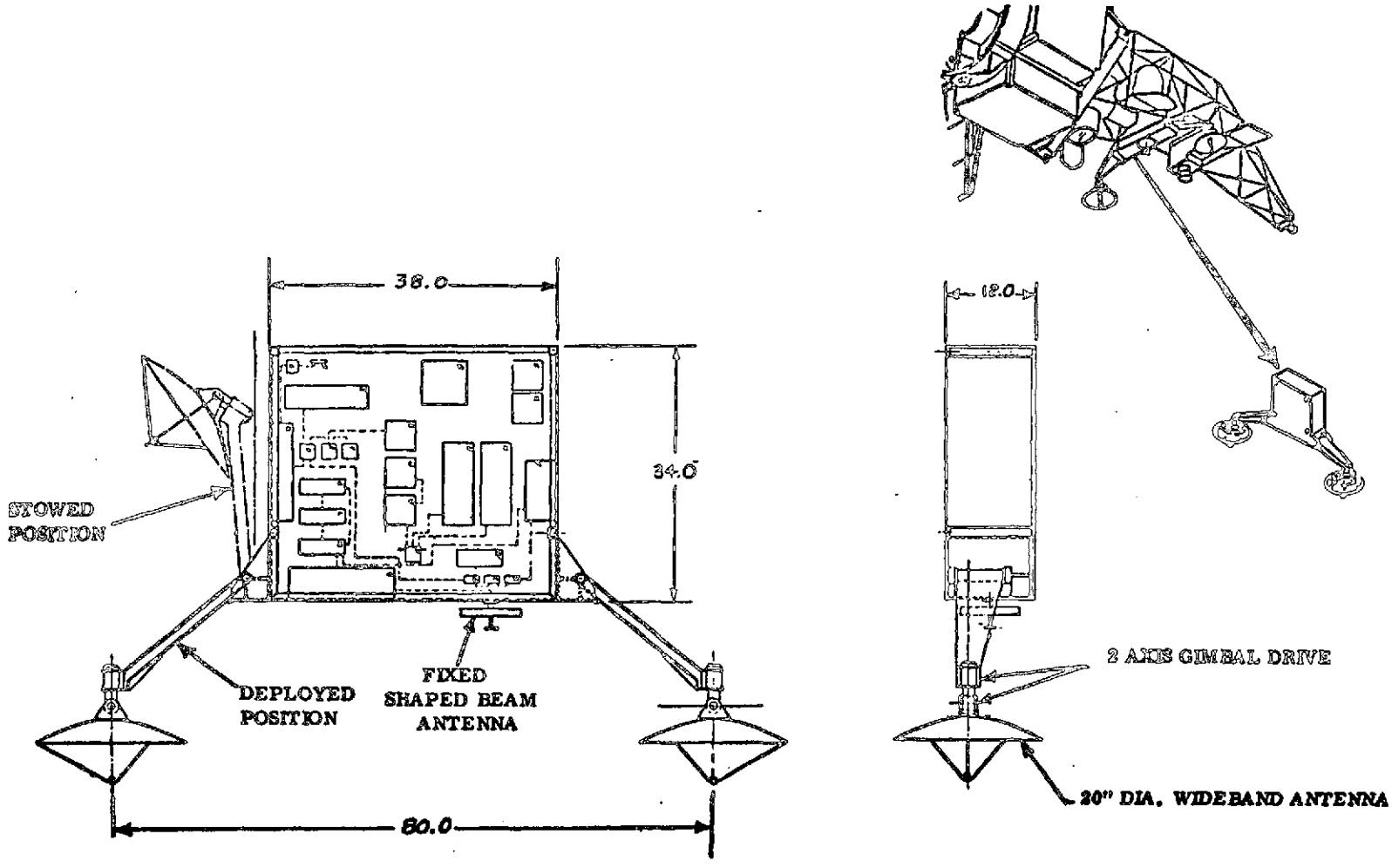

Figure 3.2-14. Wideband Module Arrangement

The performance requirements of the Wideband Antenna gimbal drive system for the Baseline EOS are:

Travel (2 axes)	$\pm 60^{o}$
Accuracy	$\pm 0.75^{o}$
Tracking Rate	30°/min (maximum)
Slewing Rate	TBD^{o}/min (minimum)
Life/Operability	2 years/12,000 cycles.

The 2-axis gimbal drive system orients the antenna about two orthogonal axes. Support for the antenna/gimbal mechanisms and the drive electronics is integrated into a single module comprising a portion of the instrument section of the spacecraft. The drive subsystem is identical for each of the two wideband antennas.

The gimbal assembly consists of a pair of compact gimbals which support the antenna and provide the required freedom of motion. The gimbal assembly responds to commands from the drive electronics located in the SCCM. Transducers are provided within the assembly to supply gimbal position feedback information for servo control of each axis. The gimbal assembly also provides rotating joints for a low loss path for RF power transmissions to the antenna. Provisions are made on the gimbal assembly to lock the antenna in the stowed position during launch, and to deploy on command in orbit.

3.2.2.5 Propulsion Module

The propulsion module, Figure 3.2-15, is a 57" diameter, 12" long aluminum shell structure attached to the subsystem structure at eight forward attachments and at the base to the adapter by the Vee-band separation clamp. This structure redistributes loads from the subsystem support truss to the adapter as discussed in Section 3.1.1.

The module is capable of accepting a wide variety of tank and thruster configurations to meet the varied propulsion requirements of multiple missions. The fabricated structure is designed for shipment to the propulsion vendor for installation of all components and plumbing and complete testing as a unit prior to assembly in the spacecraft.

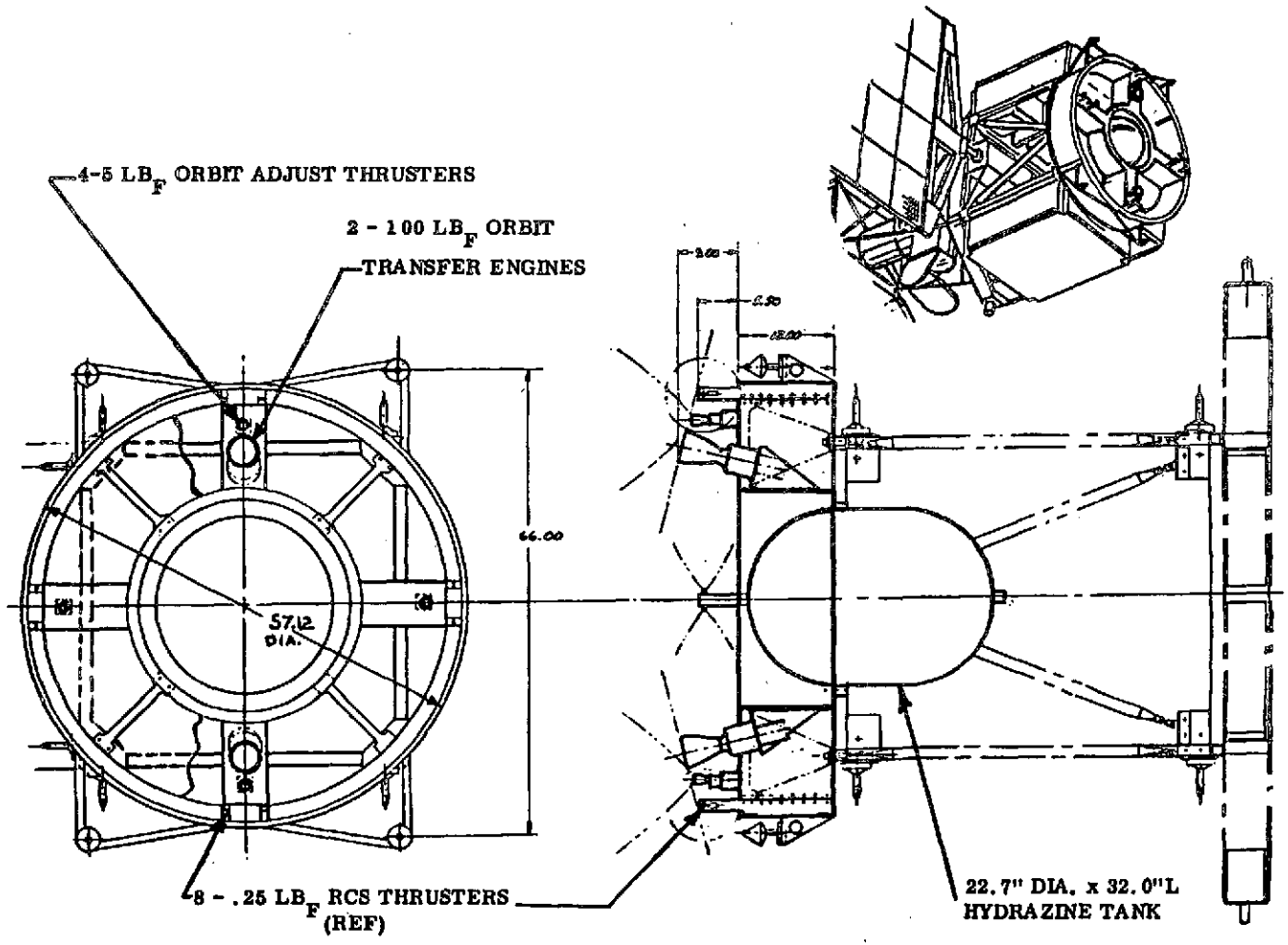

Figure 3.2-15. EOS-A Hydrazine Propulsion Module

3.2.2.6 Solar Array and Drive

The solar array is mission dependent and has differing areas and orientation requirements for alternate missions. The array and mechanism designs described below for the EOS-A Baseline array would be adapted to meet these requirements.

Solar array retention and deployment is illustrated on Figure 3.2-16. The folded array is stowed on the side of the spacecraft and retained by resilient snubber fittings and electrically operated latches during launch and retrieval. The array is deployed and retracted by a cable drive system and the panels are latched at the hinge edges when fully deployed. For retraction for retrieval stowage, the solenoid edge latches are relocked electrically to secure the assembly. Backup provisions for SAMS activation of panel latches and retention locks is also provided. The array layout, Figure 3.2-17, shows the array deployment and retention mechanisms, and the array drive is shown on Figure 3.2-18.

The Synchronizing Cable array deployment system uses pulleys attached to the hinges at the panel joints which are connected by an anchored cable to create a pantograph action. The prime power for extension is from torsion springs at the hinge lines. The coupled pulley performs two functions: (1) to synchronize the unfolding of the panels in a completely predictable motion, and (2) to provide a driving action from the rotary drive motor if friction should exceed the torsion spring driving torque. In other words, for a normal deployment, the rotary actuator serves as a governor to limit the deployment rate. If excessive friction load is encountered, the rotary actuator will inherently take over the drive function as a redundant feature. For this reason, this approach is considered preferable to the cable and reel mechanism, giving positive deployment with very little additional complexity required.

The solar array drive, Figure 3.2-18, provides the rotation of the solar panels about the pitch axis as required to track the sun. The mechanism proposed is a redundant version of the GE long life, high reliability drive which was designed to meet the more demanding requirements of future spacecraft in respect to loads and life, and which recently proved its worth with the successful completion of 17,500 hour vacuum life test at GE.

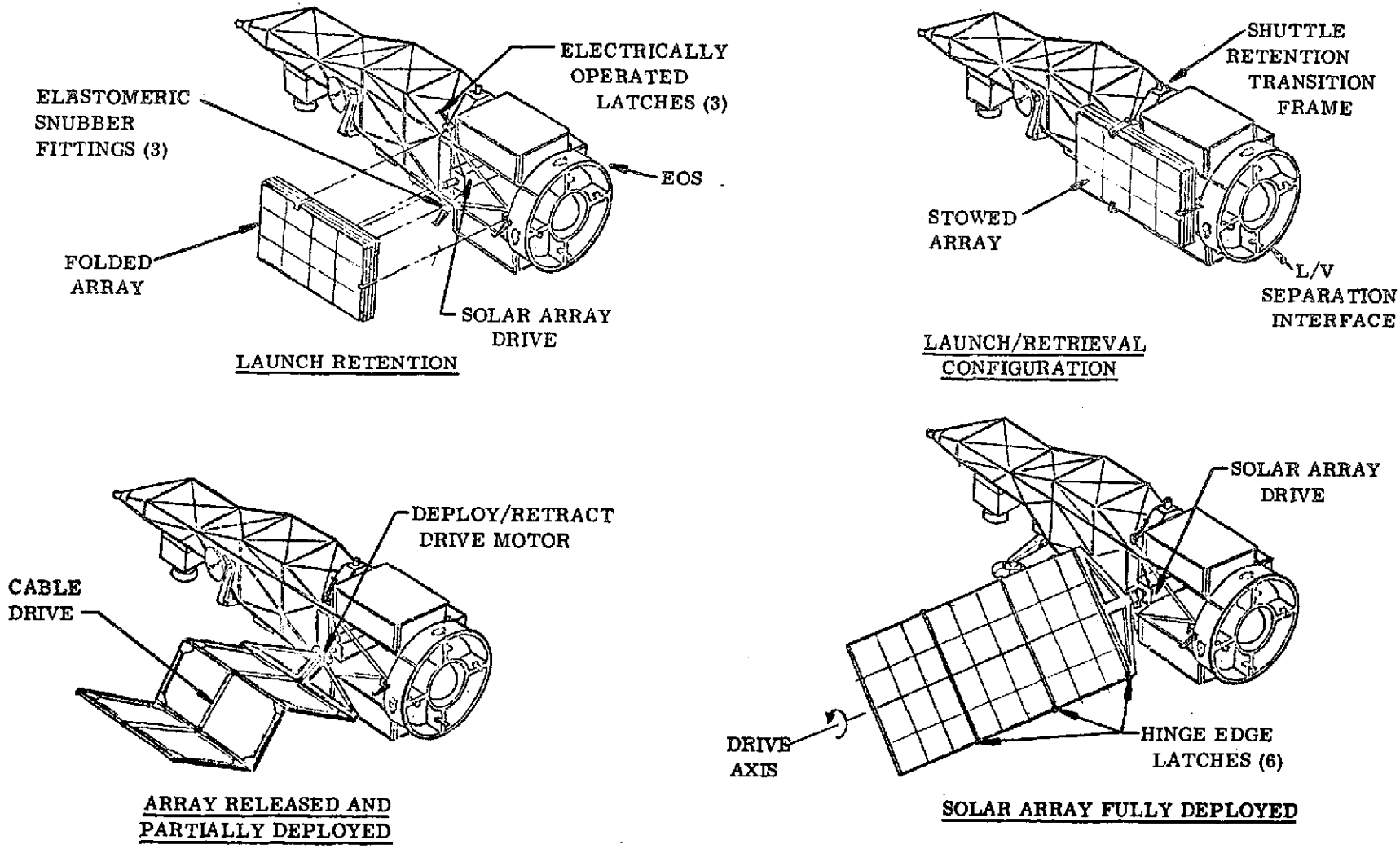

Figure 3.2-16. Solar Array Retention and Deployment

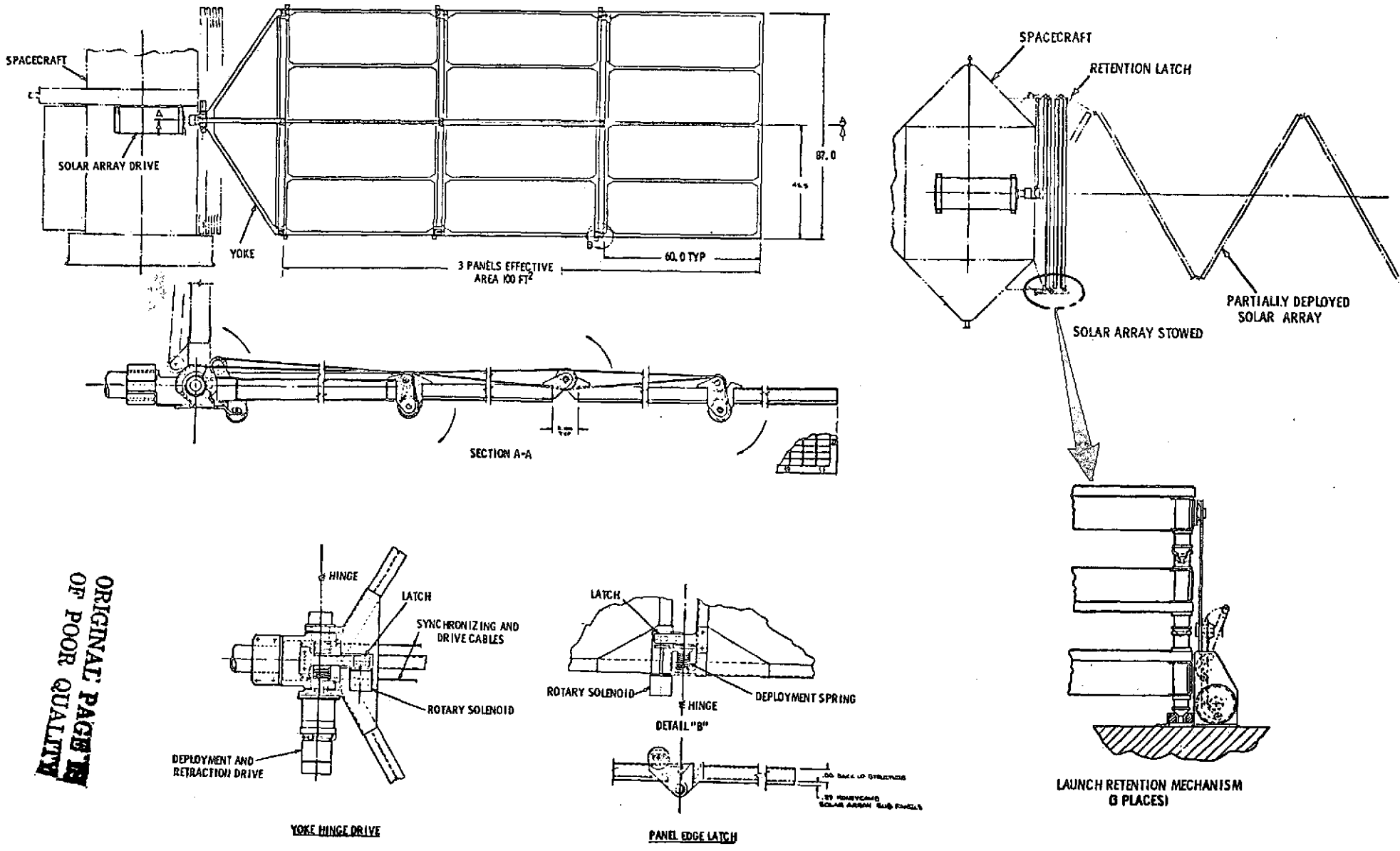

Figure 3.2-17. EOS-A Solar Array Layout

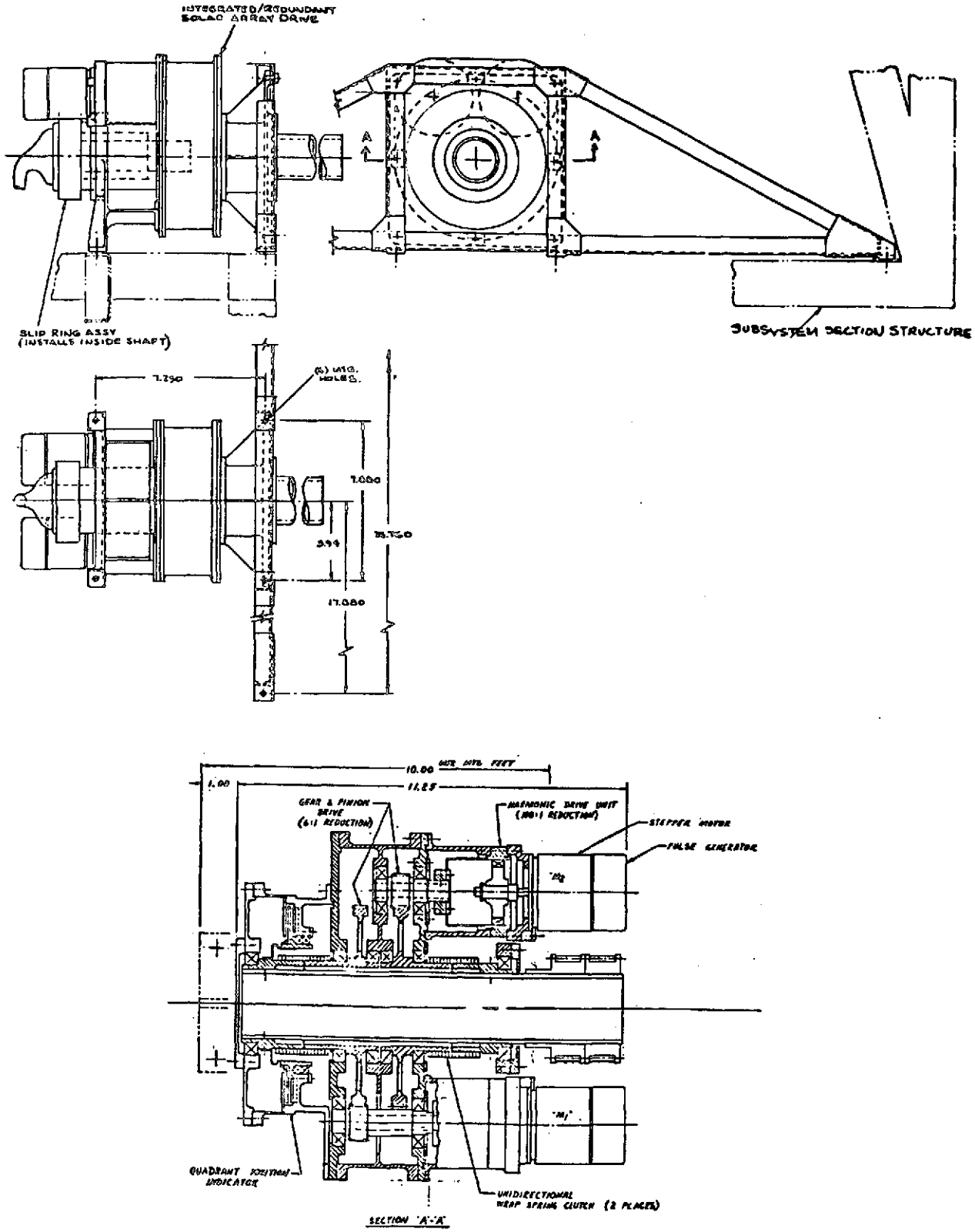

Figure 3.2-18. Solar Array Drive

As shown, the drive consists of 1.8° stepper motor, a 100 to 1 harmonic drive speed reducer followed by a further gear reduction of approximately 6:1. The output shaft is hollow and concentric with the main paddle shaft being connected to it by means of a wrap spring overriding clutch. There are two identical drives (one redundant coupled to the paddle shaft). Hence, if a failure occurs in one drive, the second drive can be energized and will inherently transmit torque to the paddle shaft through its overriding clutch. Each drive has an output rating of 40 ft-lbs and can reliably accommodate an inertia load of 10 slug-ft at 100 pulses per second to the stepper motor ($\approx$ 3 rpm at the output). The solar array structure, as shown on Figure 3.2-19, consists of standardized aluminum honeycomb panels attached to a built-up 2024 aluminum frame structure forming each array subpanel.

3.2.2.7 TDRSS Antenna Assembly

The TDRSS Antenna installation and mechanisms are shown on Figure 3.2-20. The 96 inch long antenna boom is of welded aluminum truss construction and folds forward above the instruments for launch stowage. This boom is patterned after the ATS-F/G solar array boom designed, fabricated and tested on the full scale Structural Development Model. The antenna assembly is supported at the base by the erection/retraction mechanism and at a forward launch lock for launch retention. When erected, the antenna is supported by the pivot trunnion and two tapered locking pins. The system is designed to be erected after orbit injection and can be retracted for Shuttle retrieval or resupply operations.

The TDRSS Antenna Mechanisms include the devices used to retain the antenna and boom in the stowed position(s), release and latching mechanisms, boom deployment and retraction drives, the antenna unfolding and refolding drives, and the gimbals for orienting the TDRSS antenna toward the relay satellites.

The performance of the TDRSS antenna drive system is:

Travel (2 axes)	$\pm 120^\circ$ about nadir
Accuracy	$\pm 0.3^\circ$
Tracing Rate	4°/min (maximum)

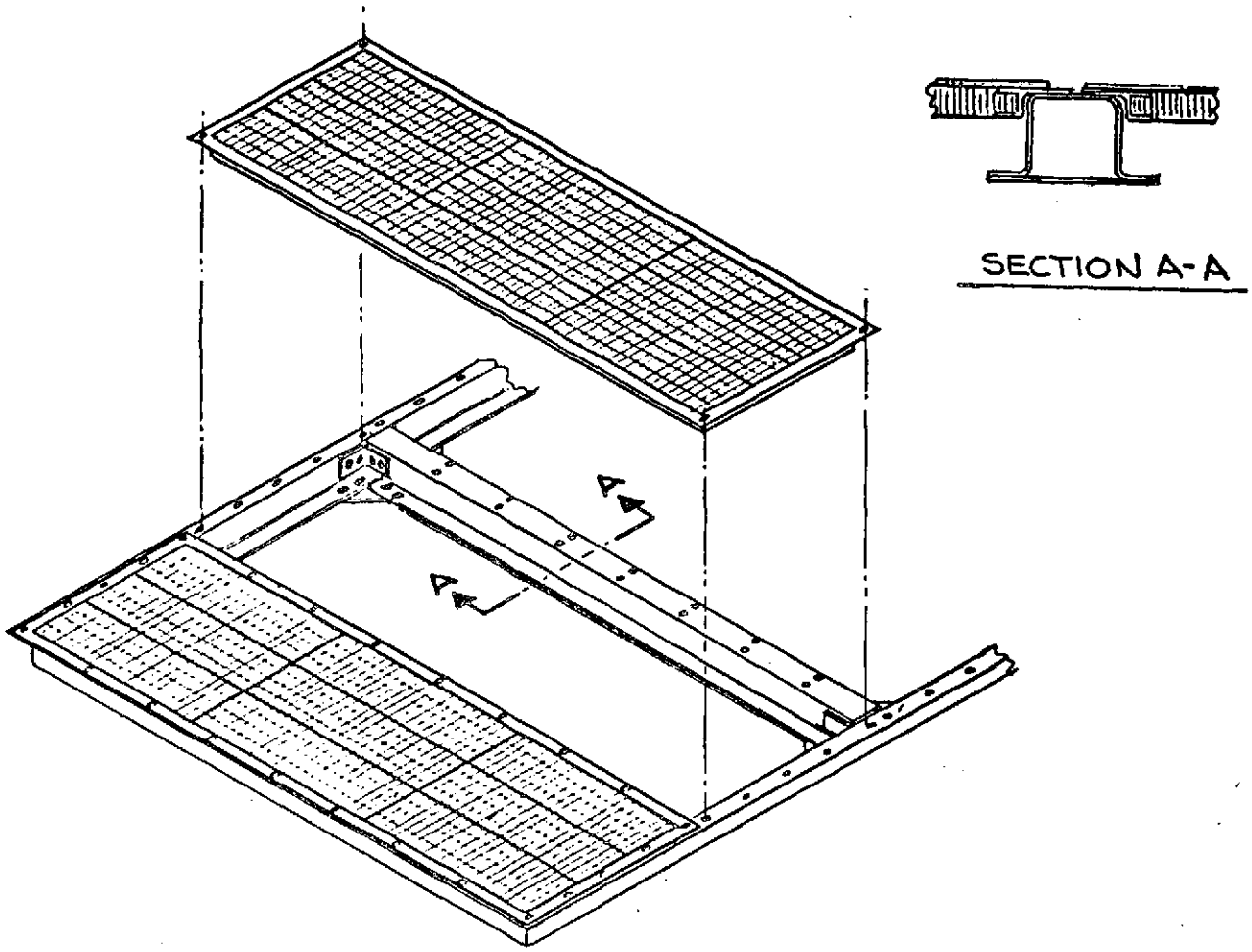

Figure 3.2-19. Solar Array Structure

Slewing Rate	TBD^{o}/min (minimum)
Life/Operability	2 years/12,000 cycles.

A specific gimbal and drive mechanism has not been selected. This selection must consider smoothness of drive at low speeds, accuracy, and slew rate capability with large inertial loads. When a low earth orbiting sun synchronous satellite is tracking an Earth Synchronous Satellite, there are phases where one of the two axis is moving very slowly over a small range and stop and reverse. Torquer-driven servos tend to result in erratic steps due to stick-slip nature of bearing friction, but they provide smooth, accurate slewing of a large diameter antenna. Stepper motor drives with gear reduction are less

susceptible to stiction.

In selecting the gimbal axis arrangement there is a choice between a pitch-roll or azimuth elevation configuration. Studies indicate that the azimuth-elevation approach is more general, more versatile, and is more compatible with auto tracking requirements than the pitch-roll configuration for the TDRSS application.

The drive will utilize elements from the Skylab S-193 and Nimbus Tracking and Data Relay two axis gimbal systems previously developed by General Electric.

The boom erection/retraction mechanism consists of redundant rotary actuators driving gear sectors on each side of the boom as shown on Figure 3.2-20. The forward launch retention mechanism consists of two side trunnion on the antenna base and a single electrically operated pin puller. Two spring loaded tapered pins automatically latch each side of the base when full deployed and can be unlocked electrically for retrieval stowage.

The antenna is deployed after boom erection by a central actuation mechanism driving the antenna sides open in an "umbrella" action. This mechanism was originally designed and developed by General Electric for a large Radiation Inc. deployable antenna and is under consideration for use on the TDRS Satellite antennas. This antenna mechanism has the capability to refurl the antenna for retrieval stowage and represents an "off the shelf" mechanism design.

The 8 foot diameter antenna is a dual mesh umbrella design patterned after the larger Radiation Inc. designs previously developed.

3.2.3 THERMAL CONTROL

The Thermal Control Subsystem (TCS) will maintain a passive and near adiabatic interface with all mission peculiar equipment including: the Wideband, Thematic Mapper, and MSS Modules; the Propulsion Module; and the Solar Array and Array Drive. Unobstructed fields of view to space will be provided for the Thematic Mapper and MSS passive

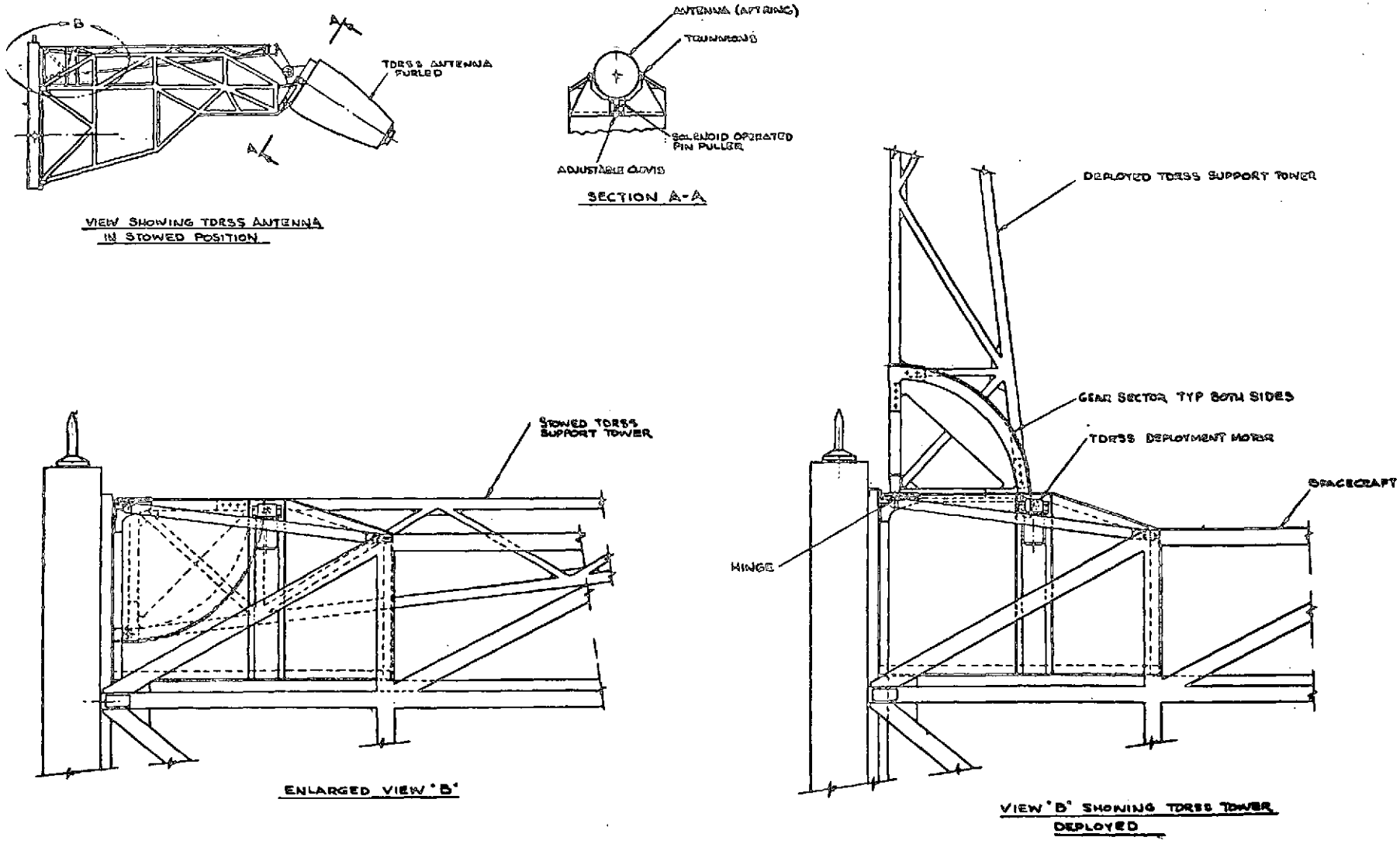

Figure 3.2-20. TDRS Antenna Installation

coolers. Each mission peculiar module will be passively thermally controlled and have its thermal design tailored for a specific mission. The thermal control components will include insulation, thermal coatings, and electrical heaters where required to maintain minimum temperature limits.

3.2.3.1 Requirements

The major TCS requirements are:

1. Maintain the following temperature ranges for mission peculiar components:
   a. Solar Array: -85 to +149°F
   b. Solar Array Drive: 30 to 110°F
   c. Propulsion Module: 40 to 120°F
   d. Rocket Engine Catalyst Bed (prior to firing): 250°F minimum.
2. Radiation parameters as defined in Table 3.1-2 and orbit missions as defined in Table 3.1-5.
3. Maintain "near" adiabatic conduction interface at the equipment mount locations to limit heat flow to or from the support structure.
4. Provide an unobstructed field of view for passive coolers.
5. Provide a definition of the module heat rejection capability as a function of thermal coating, equipment temperature, and external heat fluxes.
6. Provide system integration level evaluation of experiment modules. The experiment contractor will provide an independent thermal control system which maintains module temperatures for all mission phases for the environments defined by the spacecraft contractor, including all detector cooling required within each experiment.

3.2.3.2 Baseline Description

3.2.3.2.1 Functional

The thermal control subsystem will utilize passive components including thermal coatings, multi-layer insulation blankets, and conduction spacers. Electronic thermostats and command activated heaters will be utilized as required to maintain minimum temperature levels. Thermal control provisions are as shown on Figure 3.2-21.

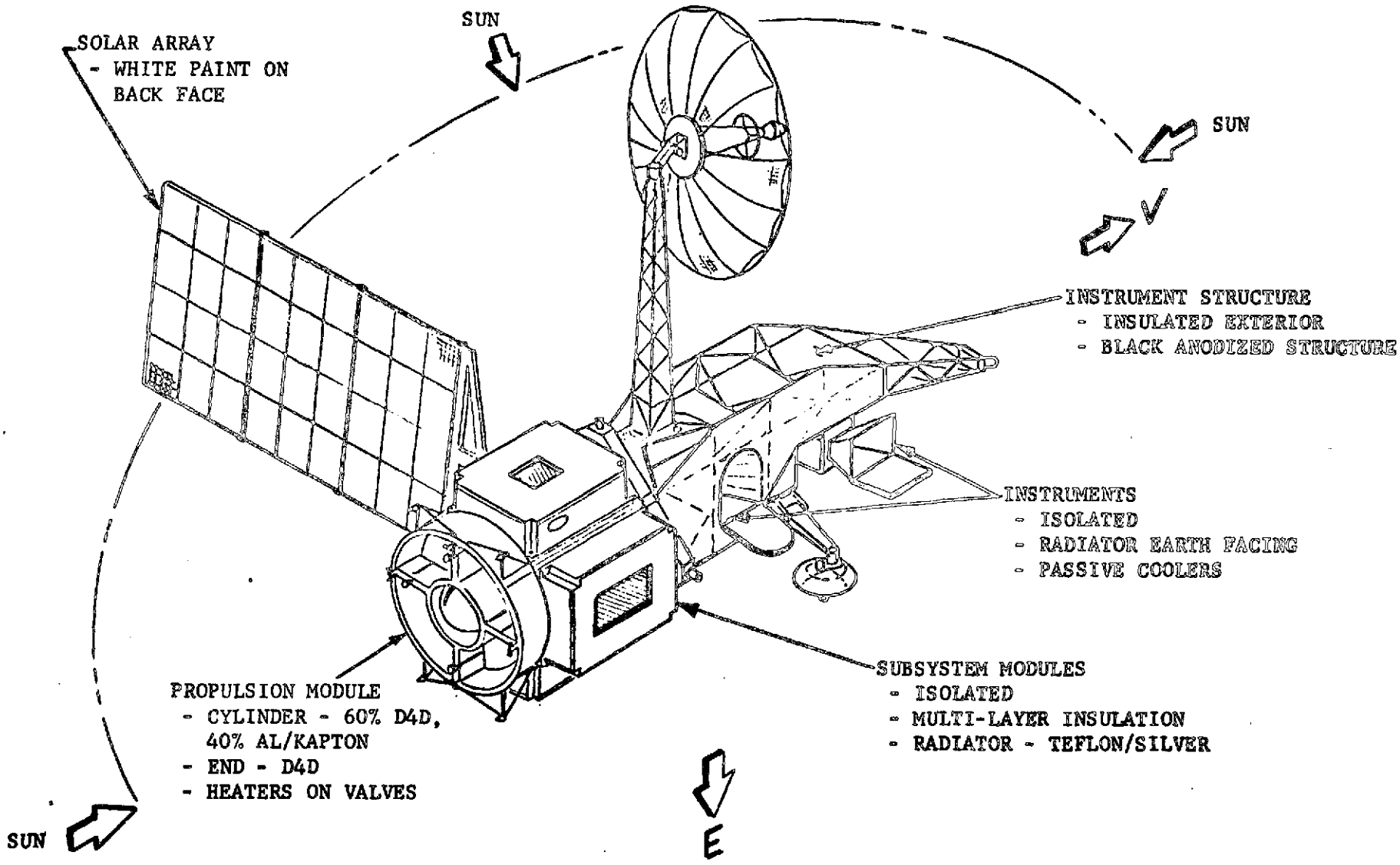

Figure 3.2-21. EOS Thermal Control Provisions

The propulsion module thermal sink is defined by the orbit average vehicle circumferential average temperature and the orbit average vehicle end sink, i.e., perpendicular to vehicle velocity vector. These sink temperatures as a function of α/ϵ ratio are presented on Figure 3.1-10. The minimum temperature for the hydrazine tank, lines, latching valve assembly and engine valves, is 40°F. From Figure 3.1-10, the average circumferential sink temperature can be maintained above 40°F with an average α/ϵ greater than 1.4 and the average end sink can be maintained above 40°F with an α/ϵ greater than 0.9. Therefore, the Propulsion Module concept is passive with thermal insulation and coatings. Local electronic thermostat activated heaters will be required at the 4 five pound Medium Thrust Engine (MTE) and 2 - 100# High Thrust Engines (HTE) valves since the engines will locally protrude the insulation. Each MTE engine valve will require 0.9 watts orbit average and each HTE engine valve will require 2.1 watts orbit average, a total heater requirement of 7.8 watts. In addition, catalyst bed heaters will be required which are activated by command 100 minutes prior to firing. Each MTE catalyst bed heater will require 2.6 watts and each HTE catalyst bed heater will require 6.0 watts, an additional 22.4 watts. A total of 30.2 watts is required for the Propulsion Module.

The solar array drive is insulated from the external environment and structurally hard mounted. The structure provides a thermal sink which maintains the array drive within temperature limits, since the small 1.6 watt array drive power is easily dissipated by leakage at the shaft exit areas.

The solar array rear surface is coated with S-136 white paint to minimize the external effect of earth albedo at low altitudes. With this provision and a honeycomb substrate which provides an effective conductivity of .5 BTU/hr ft°F, the array temperature is maintained below its maximum temperature of 149°F during daytime periods with the sun normal to the array and maintained above -85°F during orbit nighttime by a combination of its thermal capacitance and the limited earth IR heat flux.

The instrument module support structure is completely enclosed in multilayer insulation. The outside surface of the insulation will have a thermal control coating with an α/ϵ ratio

selected to maintain the average structural temperature just below the required nominal temperature for the instruments. The instruments will be isolated from the structure at the mounting interfaces using conduction isolation spacers. These spacers will maintain "near" adiabatic conditions between the experiments and structure, limiting the average heat exchange to acceptable values (nominally less than 10% of the instrument dissipation). The structure will be black anodized to maximize internal radiation exchange and limit structural temperature gradients.

The instrument modules will be independent thermally. They will be completely enclosed in multi-layer insulation except for attachment points, apertures, radiative cooler protrusions and heat rejection surfaces. The heat rejection capability for a nominal 400 nm 7.5° Beta orbit as a function of vehicle circumferential position at a 70°F heat rejection temperature using a degraded 5 mil Teflon over Silver thermal coating is shown on Figure 3.2-22. The curve indicates adequate heat rejection capability at any circumferential location with a maximum at periphery location 300 degrees on the non-sun facing side. Figures 3.2-23, 3.2-24, and 3.2-25 present additional heat rejection data for circumferential locations 1, 7, and 10 shown on Figure 3.2-22 respectively. Heat rejection capability as a function of radiator temperature and thermal control coating is presented. The data indicated that location 10 (surface parallel to the orbit plane on the non-sun facing surface) is the optimum heat rejection location since: (1) the maximum heat rejection capability exists, minimizing required radiator size; and (2) the optimum coating is Chemglaze Z306 black paint which does not degrade significantly with life affording the tightest temperature range control at minimum heat power. However, to simplify implementation and to simplify the thermal interface, the earth facing surface (location 7) will be used as the heat rejection surface as long as adequate heat rejection exists with minimum cost impact. These requirements will be interfaced with each experiment for each mission to insure the most adequate and cost effective thermal control concept.

3.2.3.2.2 Hardware

The mission peculiar TCS component size, weight, and quantity is presented in Table 3.2-3. The heater element, thermostat, and insulation blanket description are defined in Section 3.1.2.

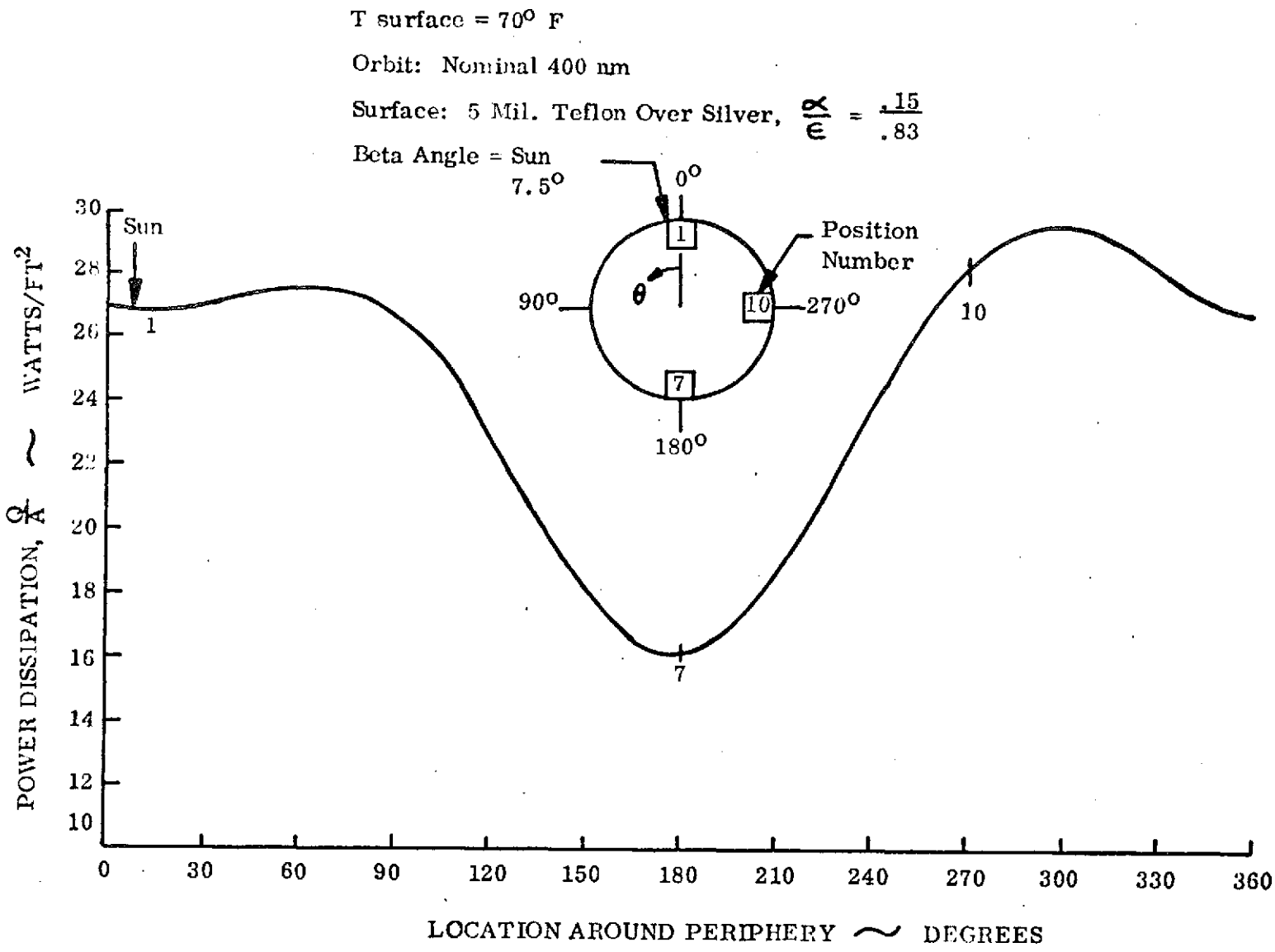

Figure 3.2-22. Power Dissipation vs. Location

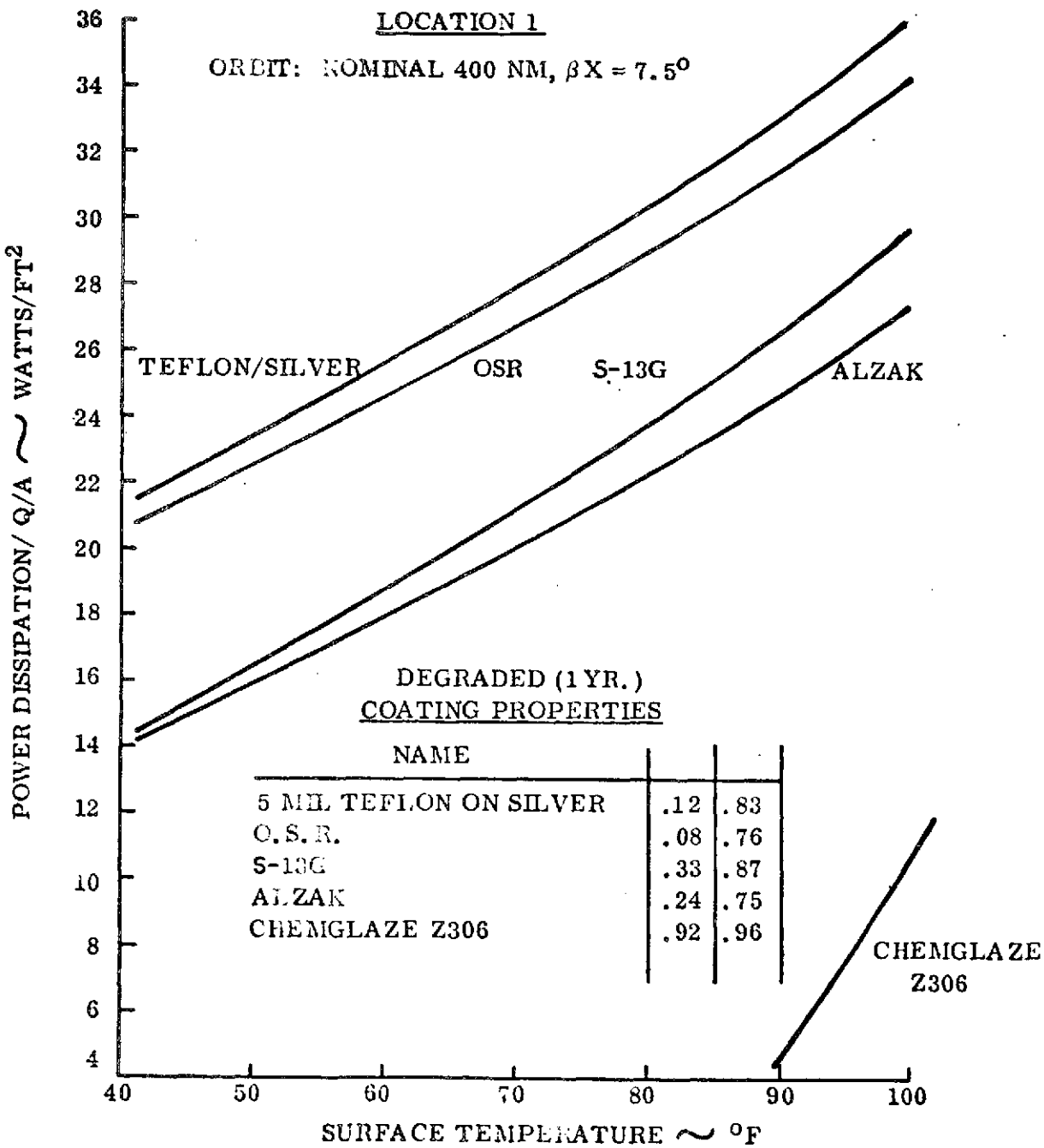

Figure 3.2-23
Power Dissipation, Q/A, vs. Surface Temperature for Various Surface Coatings

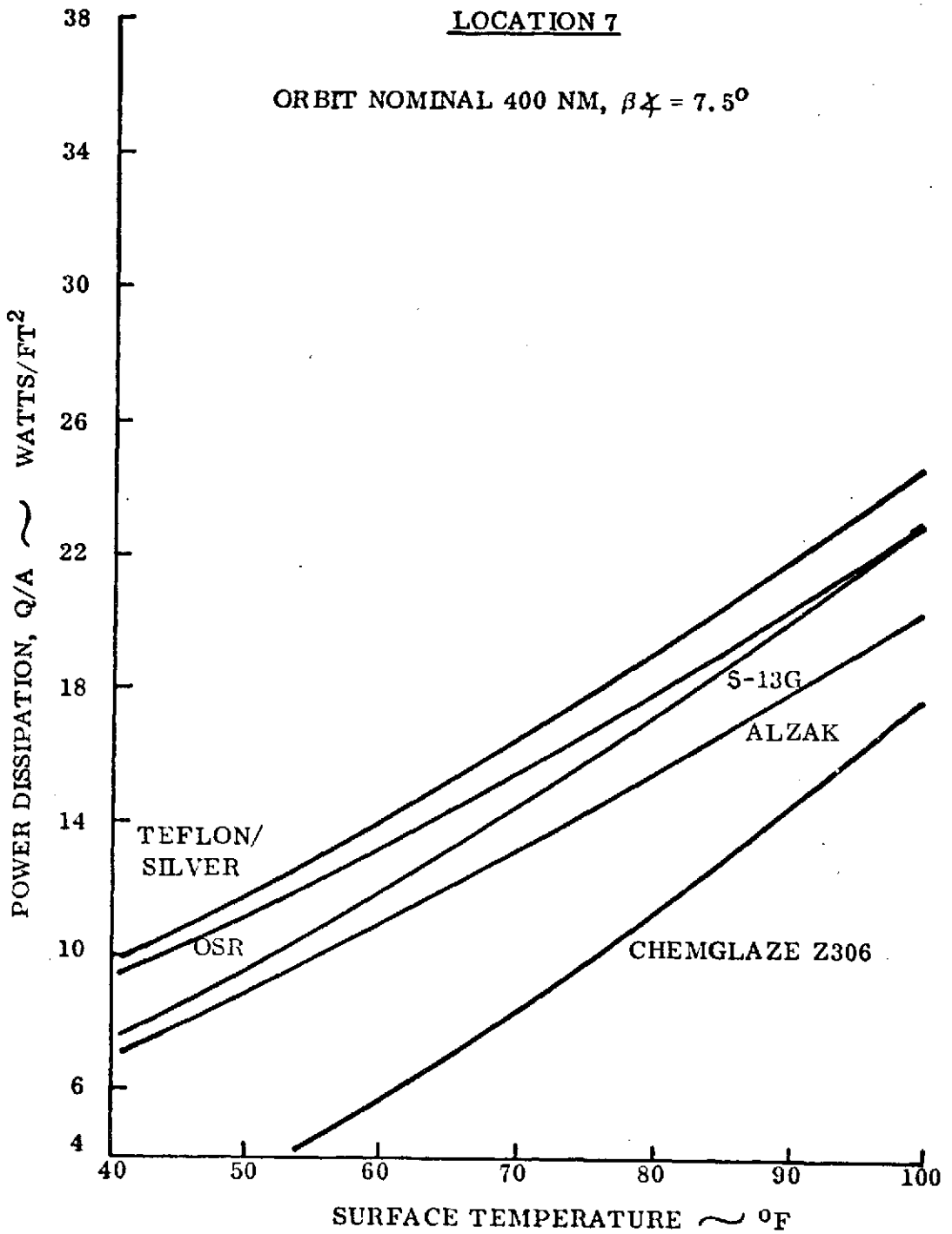

Figure 3.2-24
Power Dissipation, Q/A, vs. Surface Temperature for Various Surface Coatings

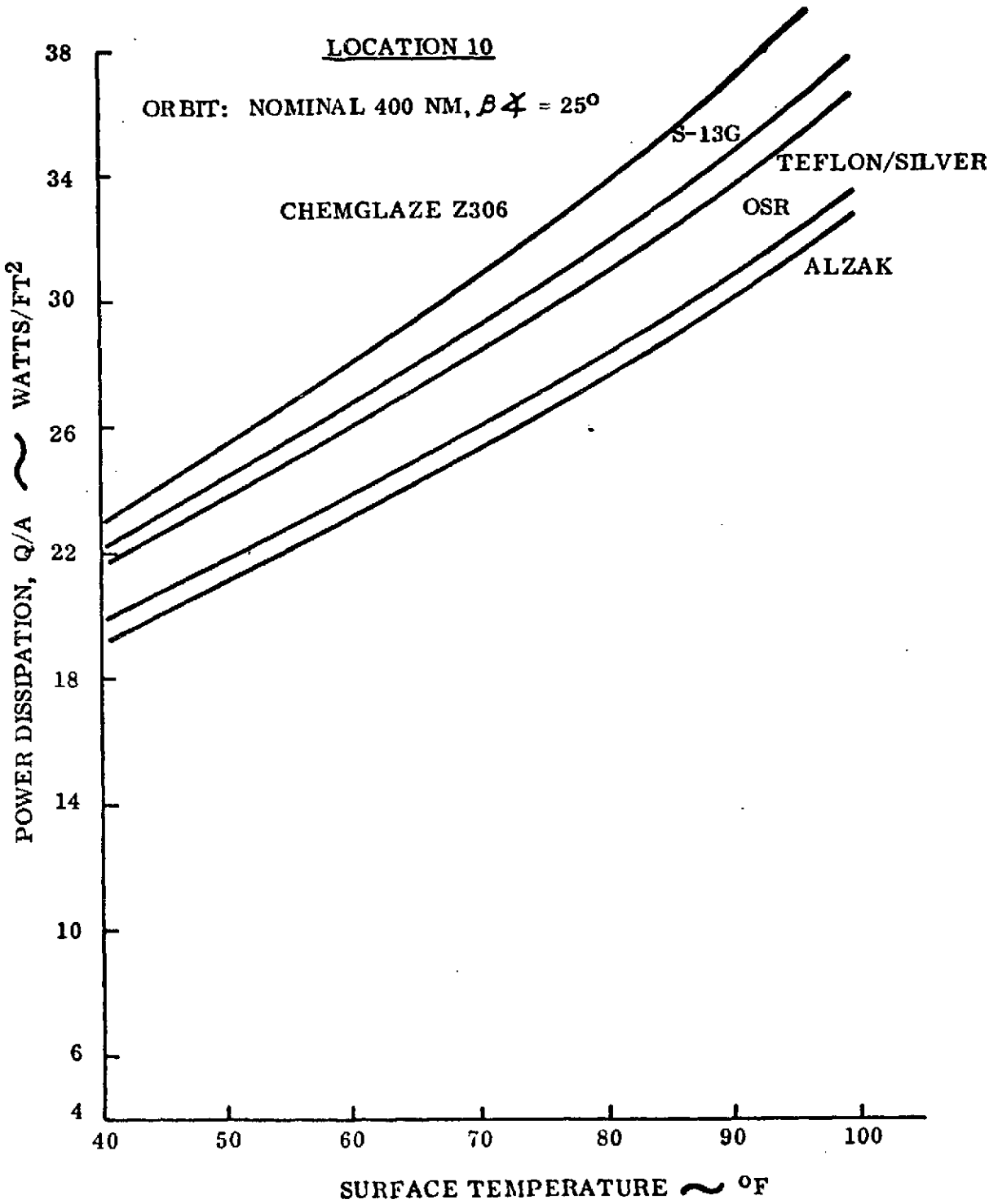

Figure 3.2-25
Power Dissipation, Q/A vs. Surface Temperature for Various Surface Coatings

Table 3.2-3. Thermal Control Component List

Component	Size	Weight	Quantity
Insulation Blanket	.5" x Area	20.3	1 set
Thermal Coatings	.01" x Area	1.6	1 set
Thermal Grease	.01" x Area	0.2	A/R
St ycast Conductors	5 in^3	0.2	A/R
Thermal Tapes	.01" x Area	0.7	A/R
Thermal Fasteners	.1" x Area	4.1	1 set
Heater Assembly			
Heater	.02" x Area	0.3	12
Thermostat	3" x 2" x 1"	1.9	4
TOTAL		29.3	

3.2.3.2.3 Interface

The thermal interface with each instrument module shall be designed to isolate the experiment from the structure to the maximum extent possible, as specified in Table 3-9 of the Thermal Subsystem Specification. The mission peculiar TCS requires 28 flight temperature sensors and 12 commands as defined in Table 3-3 and 3-4 of the thermal subsystem specification.

3.2.3.3 Performance

The thermal control subsystem and components meet all thermal requirements defined in Section 3.2.3.1.

3.2.3.4 Follow-On Mission Accommodations

The effects on the mission peculiar modules of follow-on missions is generically presented in Section 3.1.2.4. The design of the mission peculiar instruments will be modified as

dictated by the variations in the external environments discussed. The thermal control concepts can be adapted to alternate missions with only minor variations, i.e., thermal coating selection and heat rejection area, etc.

3.2.3.5 Alternatives

Alternate thermal control concepts were evaluated in detail in design trade-off Report #3, and found to be less cost effective and more complicated than those selected.

3.2.4 EOS-A MISSION PECULIAR PROPULSION SUBSYSTEM

The propulsion subsystem for the EOS-A spacecraft provides the mission peculiar functions of orbit adjust and orbit transfer. The Orbit Adjust and Orbit Transfer Subsystem (OA/OTS) selected (Reference Report #3) as the most cost effective and flexible propulsion type for either a Delta or Tital launched EOS-A spacecraft was a mass expulsion, monopropellant, hydrazine fueled, propulsion system of integral design with the RCS. The design is such that the OA/OTS functions are accomplished by the basic RCS system modified by the simple addition of two 100 LB_F and four 5 LB_F REA's and with the substitution of a larger capacity propellant tank for the previously described RCS tank. The system operates identically to that previously described in the RCS Subsystem section of this report. The combined RCS/OA/OT subsystem will hereinafter be referred to as the Propulsion Subsystem.

3.2.4.1 Subsystem Requirements

The EOS-A propulsion system must provide, in addition to the RCS functions previously described, the capability for accomplishing the following maneuvers:

a. Removal of launch vehicle injection errors, both in plane and cross track
b. Orbit maintenance at the desired mission altitude
c. Orbit transfer to an altitude compatible with Shuttle retrieval
d. Maintenance of spacecraft attitude control during accomplishment of the above orbit adjust and orbit transfer maneuvers.

Table 3.2-4 presents a listing of the specified OA/OTS functions and the energy requirements necessary to accomplish each of these maneuvers. Using these specified

Table 3.2-4. Orbit Adjust/Orbit Transfer Subsystem

Specified Requirements	
• Mission Orbit	418 Nm Circular
• Retrieval Orbit	330 Nm Circular
• Mission Lifetime	3 Years (for sizing expendables)
• Launch Vehicle	Delta Series
• Spacecraft Weight	2200 LBS plus propulsion
• Spacecraft M of I	500 to 2500 Slug-Ft^2
• OA Thruster Torque Arm	2.5 Ft.
• Shuttle Compatible	
• No Single Point Failure Shall Prevent Shuttle Retrieval	
• Other Energy Requirements (As Below)	

Functions	Requirements
• Orbit Adjust Functions	
Inject. Error Removal	
In Plane	42 FPS
Cross Track	16.5 FPS
Orbit Maintenance	
(at 418 Nm)	1.4 FPS/Yr
• Orbit Transfer Functions	
Retrieval at 330 Nm Circular	142.4/141.5
S/C Control	100% Duty Cycle for One Engine

requirements, the values presented in Table 3.2-5 can be derived from typical performance achieved by a hydrazine type of propulsion system. As shown in Table 3.2-5, the OA/OTS functions for the EOS-A mission will require the expenditure of 122.2 pounds of hydrazine propellant. Addition of the RCS requirement of 18.8 pounds results in a mission requirement of 141.0 pounds of fuel for the propulsion subsystem.

3.2.4.2 Subsystem Baseline Description

3.2.4.2.1 Functional Block Diagram

The Propulsion Subsystem functional block diagram is shown in Figure 3.2-26. The block diagram is identical to that shown and described for the RCS but with the addition of four orbit adjust and two orbit transfer rocket engine assemblies. Because of this similarity, a description of the functional flow will not be repeated.

The subsystem electrical interface consists of a connector panel through which power and command signals are supplied to the REA propellant control valves, REA heaters and

Table 3.2-5. Orbit Adjust/Orbit Transfer Subsystem Derived Requirements

Maneuver	Total Impulse (LB_F-SEC)	Specific Impulse (SEC)	Propellant Req'd (LBm)
Injection Error Removal	4,275	225	19.0
Orbit Maintenance (3 Years)	1,575	225	7.0
Retrieval - V1	10,304	230	44.8
V2	10,166	230	44.2
Control	1,332	185	7.2
Total	27,652		122.2

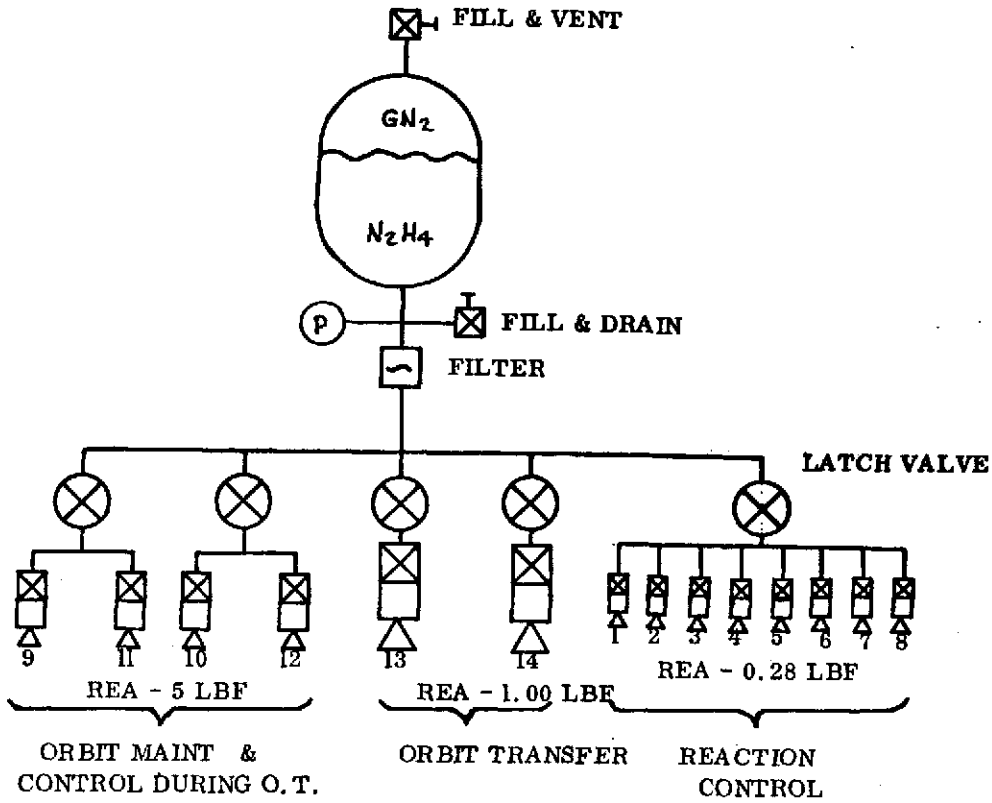

Figure 3.2-26. Propulsion Subsystem Block Diagram

latching valves are received and through which temperature, pressure and latch valve position monitoring signals are supplied to the spacecraft telemetry system. The RCS and OA REA propellant control valves are supplied power through valve driver circuits located in the Driver Electronics Box of the Attitude Control Subsystem. All other component power is supplied by, and signals are received by, the Signal Conditioning and Control Module.

3.2.4.2.2 Subsystem Characteristics

The weight summary for the hydrazine type propulsion subsystem capable of performing the RCS/OA/OTS functions is shown in Table 3.2-6. Component weights, excepting the 100 LB_F REA's are based on actual flight qualified hardware. When loaded with propellant and pressurant, the propulsion subsystem for the EOS-A spacecraft will weigh approximately 230 pounds.

Table 3.2-6. Propulsion Subsystem Weight Summary

Component	Unit Weight (LBS)	No Req'd	Weight (LBS)
Rocket Engine Ass'y. (100 LBF)	10.00	2	20.00
Rocket Engine Ass'y. (5.0 LBF)	1.03	4	4.12
Rocket Engine Ass'y. (0.28 LBF)	0.36	8	2.88
Propellant Tank	27.50	1	27.50
Fill & Vent Valve	0.11	1	0.11
Fill & Drain Valve	0.11	1	0.11
Pressure Transducer	0.16	1	0.16
Filter	0.22	1	0.22
Latching Valve	0.52	5	2.60
Wire Harness		A/R	4.00
Misc.		A/R	20.00
	Dry Weight		81.70
	Mission Propellant		141.00
	Loading Errors		2.11
	Pressurant		5.23
	Propulsion System Loaded Weight		230.04

The RCS thrusters are positioned in bow-tie configuration at four locations near the aft end of the EOS-A spacecraft as depicted in Figure 3.2-27. This configuration provides three axis motion of the spacecraft using a minimum number (eight) of RCS REA's. One OA thruster is also positioned at each of the four RCS locations but is oriented such that the nozzles point in the aft direction. This configuration permits orbit adjustments using opposite pairs of engines or of two axis reaction control during orbit transfer firings by the use of a single OA engine. Two orbit transfer engines are located in an

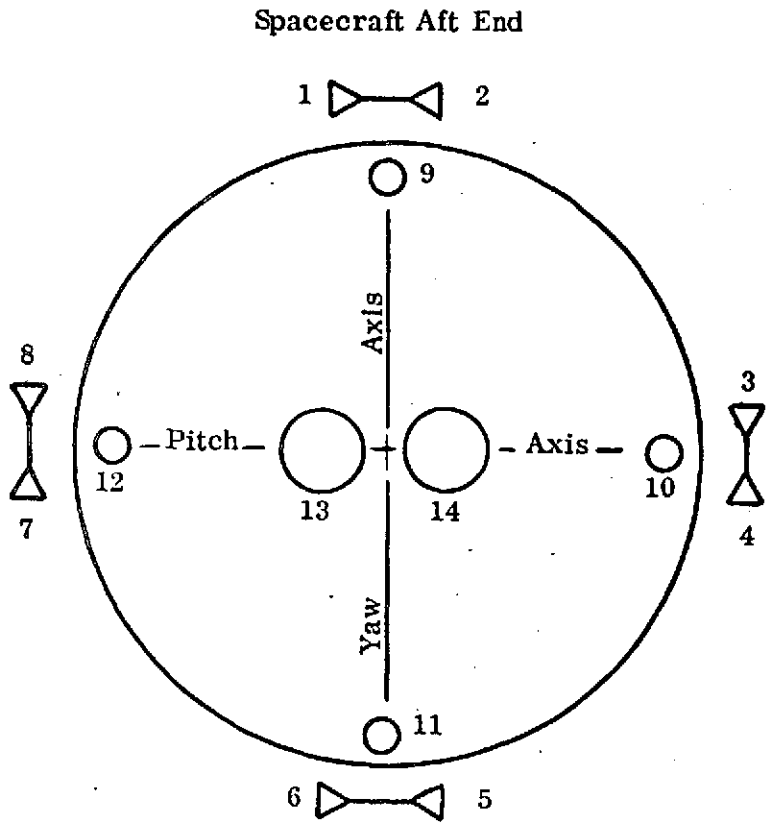

Function	0.28 LBF REA Usage	5.0 LBF REA Usage
+ Roll	1 and 5 or 3 and 7	---
- Roll	2 and 6 or 4 and 8	---
+ Pitch	3 and 8	11
- Pitch	4 and 7	9
+ Yaw	2 and 5	12
- Yaw	1 and 6	10

Figure 3.2-27. Propulsion Subsystem Thruster Orientation

aft pointing orientation and provide the required redundancy for spacecraft retrieval since either of the two engines can accomplish the function.

The modular packaging design of the propulsion system is shown in Figure 3.2-28 and is described in more detail in the Structure/Mechanical section of this report.

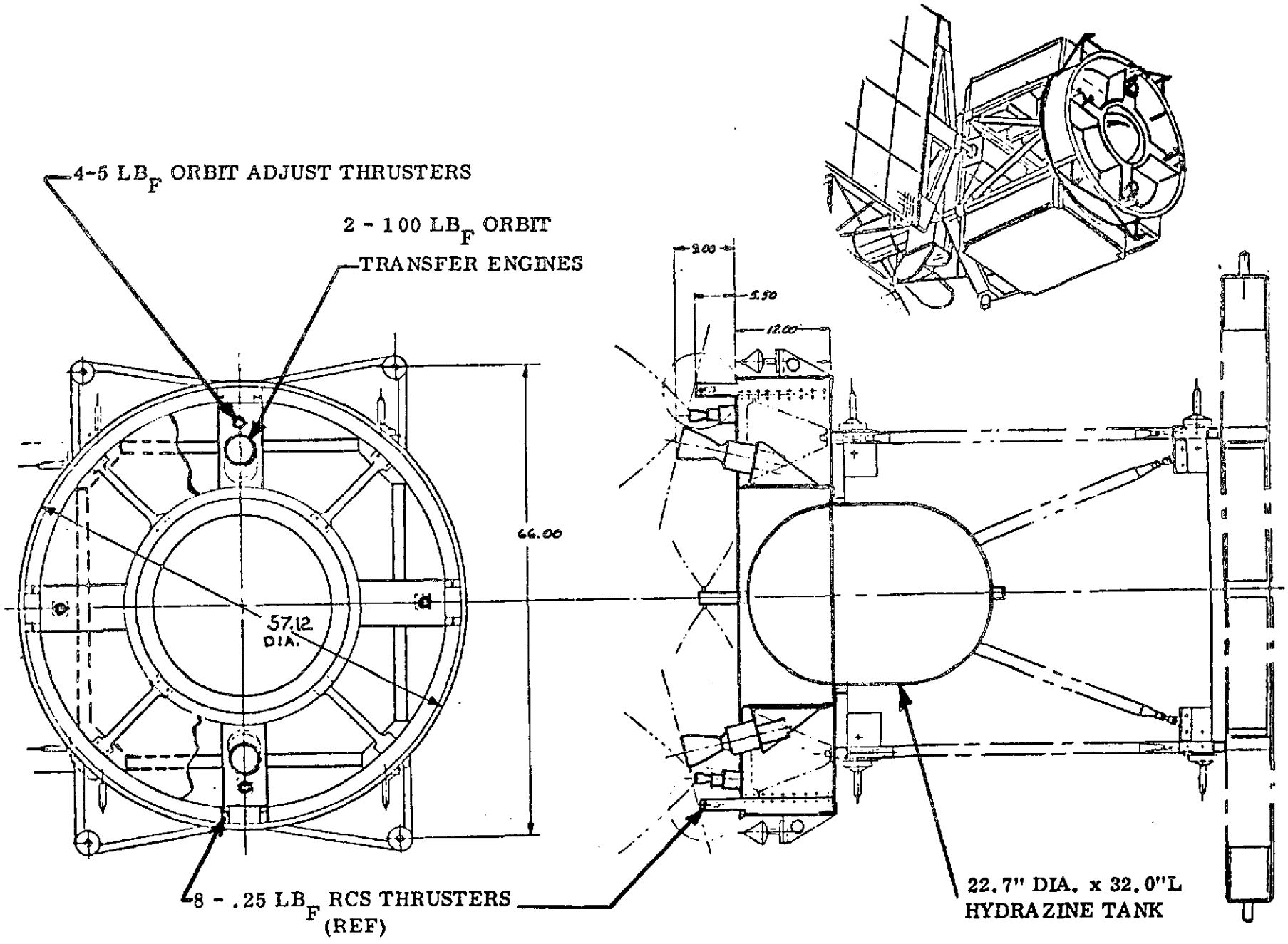

Figure 3.2-28. EOS Hydrazine Propulsion Module

3.2.4.2.3 Subsystem Components

The propulsion subsystem tank provides the same functions as previously described in the RCS section. As shown in Table 3.2-7, four tanks, two with rubber bladders and two with surface tension devices, are of particular interest for the containment of the 141 pounds of propellant. The smaller sizes would require use of multiple tanks while the largest size has adequate capacity for the mission requirement. Final selection of the optimum EOS-A tank size and the type of expulsion device will be made during a later program phase. As a baseline, the 22.7" diameter x 32" long tank with a surface tension device has been selected.

A thrust level of 100 pounds furce was selected for each of the two REA's used for orbit transfer. This thrust level is identical to that specified by NASA/JPL in their RFP for the REA to be used on the MJS-77 program and will therefore permit the EOS-A program to take advantage of a developed and qualified orbit transfer REA. A vendor selection for development of the MJS-77 REA will be made by NASA/JPL in 1974 with engine qualifications scheduled for completion before the end of 1975.

All propulsion subsystem components, excepting the propellant tank, are summarized in Table 3.2-8. All components except for the 100 LB_F REA are qualified and are currently being procured for the General Electric designed Broadcast Satellite, Experimental (BSE).

Table 3.2-7. Propulsion Subsystem Tank Candidates

Tank Dia. (IN.)	Program Usage	Type of Expulsion Device	Volume (IN^3)	Propellant Capacity (LBM)	Tank Weight (LBM)	Tank Mfr.
16.5	BSE (GE)	EPT-10 Bladder	2300	55	8.5	P.S.I.
16.5	Sat Comm (RCA)	Surface Tension	2350	55	5.3	Fansteel
22.2	P-95 (LMSC)	EPT-10oc AF-E-332 Bladder	5580	135	15.0	P.S.I.
22.7 Dia. x 32.0 long	Classified (LMSC)	Surface Tension	9200	225	27.5	P.S.I.

Table 3.2-8.

Propulsion Subsystem Component Program History

Propulsion Subsystem Component	Component Subassembly	Supplier	Flight History	Qualified Applications
Fill & Drain/Vent Valves	-	Pyronetic	None	BSE, CTS
Pressure Transducer	-	Bourns	Saturn	BSE, CTS
Latching Valve	-	Hydraulic Research & Manufacturing Company	RAE-B	BSE SMS CTS FSC
Filter	-	Vacco Industries	Intelsat IV RAE-B	BSE, CTS
Orbit Transfer High Thrust Engine (100 LBF Thrust)	Thrust Chamber Assembly & Valve	Same as JPL Selected Supplier for MJS Mission	None	None
Orbit Transfer Medium Thrust Engine (5 LB_F Thrust)	Thrust Chamber Assembly	Hamilton Standard	ATS III, SKYNET II IDCSP/A, NATO II	BSE NATO III, CTS NRL-MSD
	Thrust Chamber Valve	Hydraulic Research & Manufacturing Company	ATS III, SKYNET II IDCSP/A, NATO II	BSE NATO III CTS
Reaction Control Low Thrust Engine (0.28 LB_F Thrust)	Thrust Chamber Assembly	Hamilton Standard	SOLRAD X	BSE, NRL-MSD, CTS
	Thrust Chamber Valve	Wright Components	SOLRAD X	BSE, NRL-MSD, CTS
Thrust Chamber Heater (HTE)	-	Same as JPL Selected Supplier for MJS Mission	None	None
Thrust Chamber Heater (MTE)	-	Thermal Systems, Inc.	RAE-B	BSE, CTS NATO III
Thrust Chamber Heater (LTE)	-	Thermal Systems, Inc.	None	BSE, CTS
Engine Temperature Sensor	-	TSI	None	BSE, CTS; P-50
Tank Temperature Sensor	-	Gulton	Apollo	BSE, CTS

3.2.4.3 Subsystem Performance

The OA/OT engines operate in a varying thrust mode as propellant is consumed from the tank. Thrust performance values for the Orbit Adjust engine as a function of tank pressure throughout a typical blowdown range are presented in Figure 3.2-29. The orbit adjust engine is required to operate in a steady state mode while performing orbit adjust functions and in a pulsing mode for performing reaction control functions. Figure 3.2-30 presents the steady state specific impulse performance as a function of inlet pressure while Figure 3.2-31 presents the pulsing mode specific impulse performance of a typical duty cycle for the orbit adjust engine.

The orbit transfer engine operates basically in a steady state mode. Thrust performance values as a function of tank pressure throughout a typical blowdown range are presented in Figure 3.2-32. The orbit transfer engine steady state specific impulse throughout this range of pressures is shown in Figure 3.2-33 and forms the basis for the calculation of the propellant budget.

3.2.4.4 Follow-On Mission Accommodation

Except for the SEOS mission, the proposed orbit adjust/orbit transfer subsystem can accommodate all missions by a simple change of propellant tankage thereby permitting higher or lower propellant loads. Tanks as large as the JPL/VO-75 tank can be accommodated within the propulsion subsystem structure. This tank has external dimensions of 36" diameter by 55.5" long with an internal volume of 43,811 in^3. When sized for normal blowdown operation, the tank capacity is 1060 pounds of hydrazine which is sufficient for the worst case mission.

The SEOS mission requires use of the space tug for insertion of the spacecraft into a geosynchronous orbit thereby negating the requirement for an integral spacecraft orbit transfer system. On orbit, the SEOS spacecraft orbit adjust functions include the requirement for:

a. Initial station positioning

b. E-W station keeping

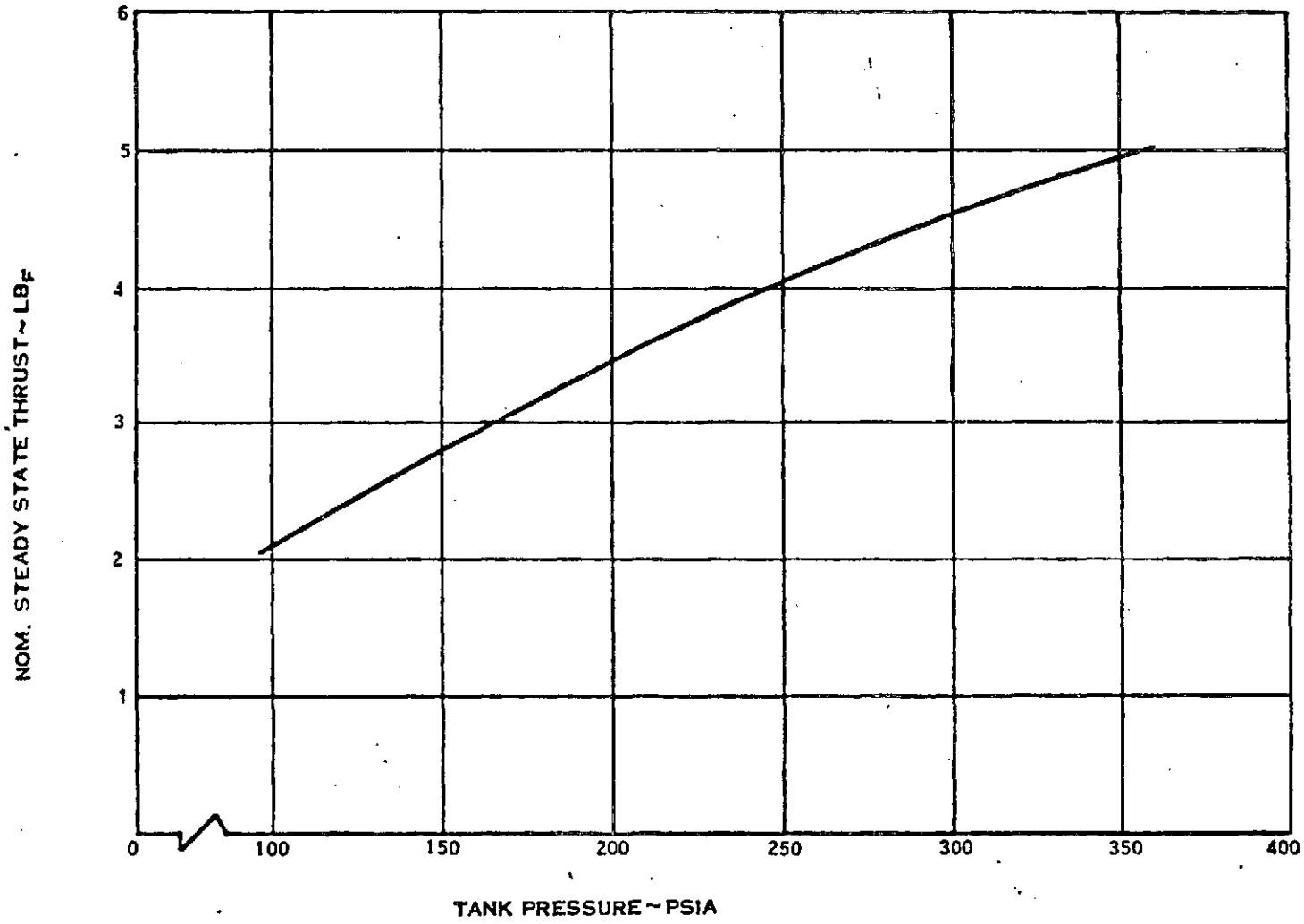

Figure 3.2-29. Orbit Adjust Engine Thrust vs. Tank Pressure

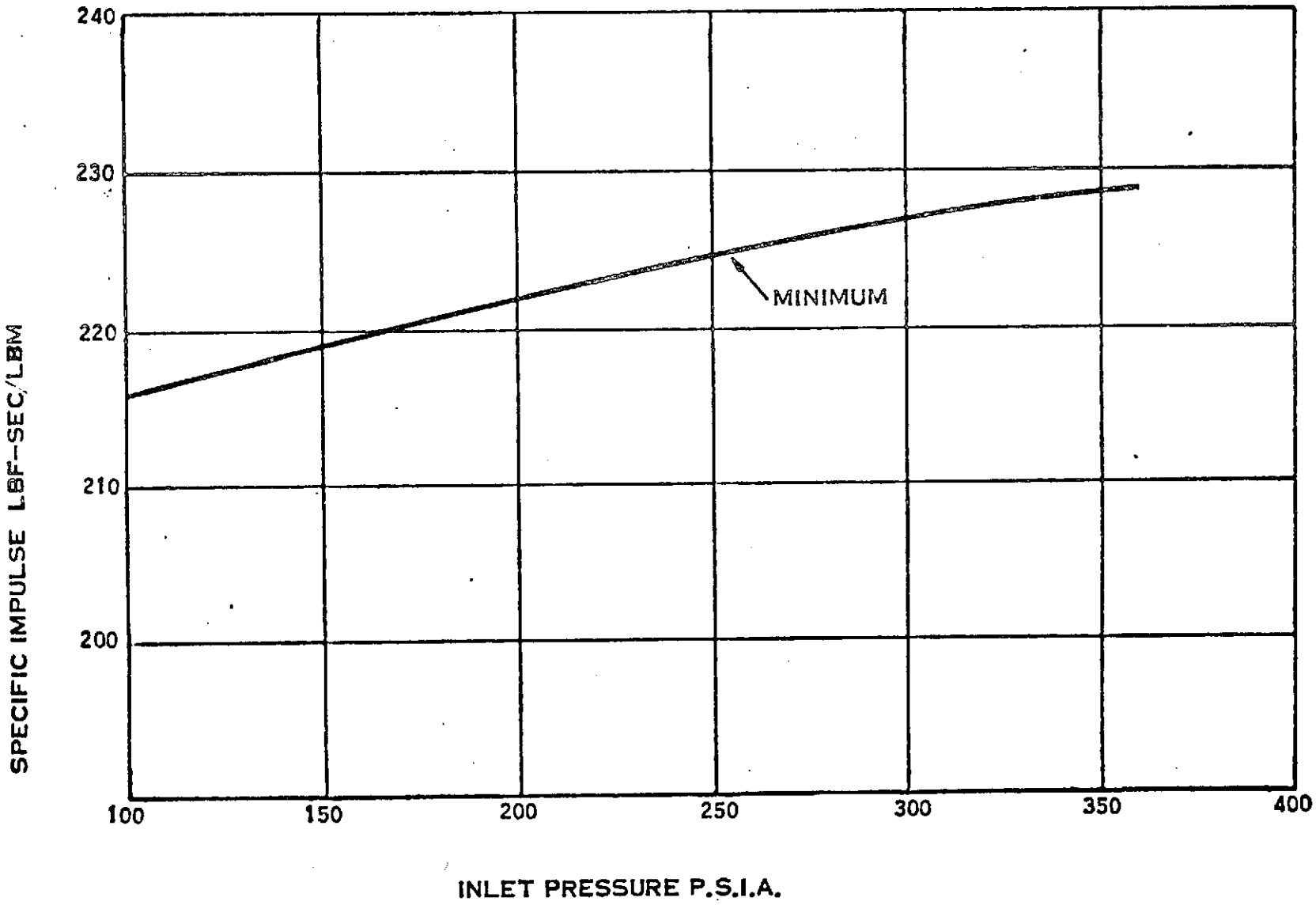

Figure 3.2-30. Orbit Adjust Engine Steady State Specific Impulse vs. Inlet Pressure

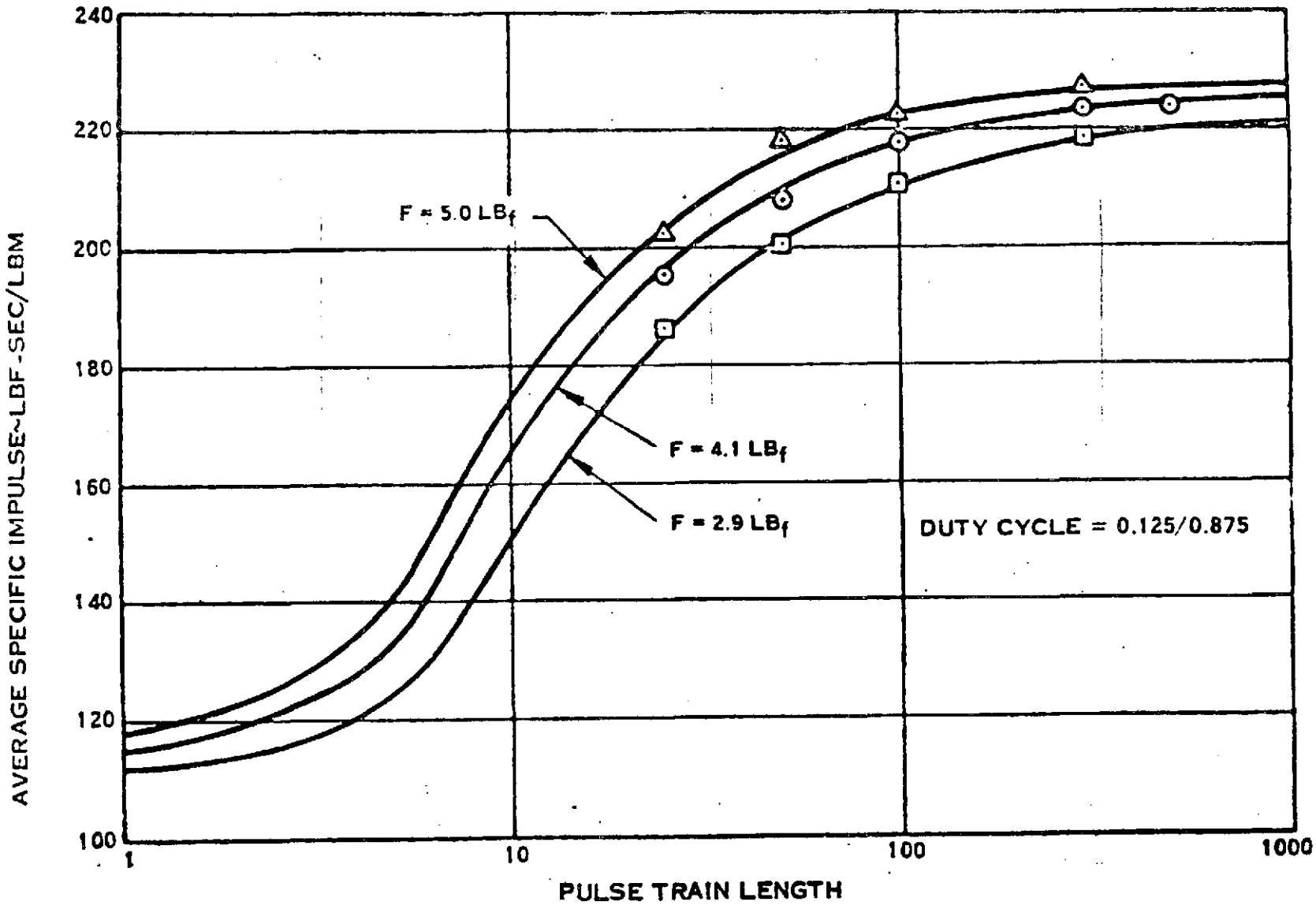

Figure 3.2-31. Typical Orbit Adjust Engine Pulsing Performance

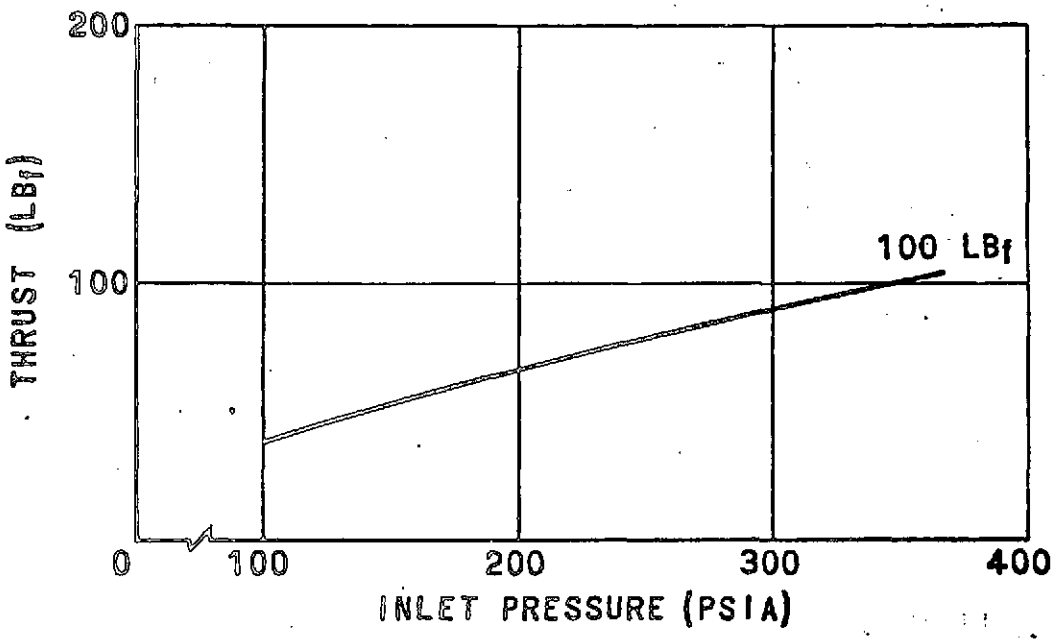

Figure 3.2-32. Orbit Transfer Engine Thrust vs. Inlet Pressure

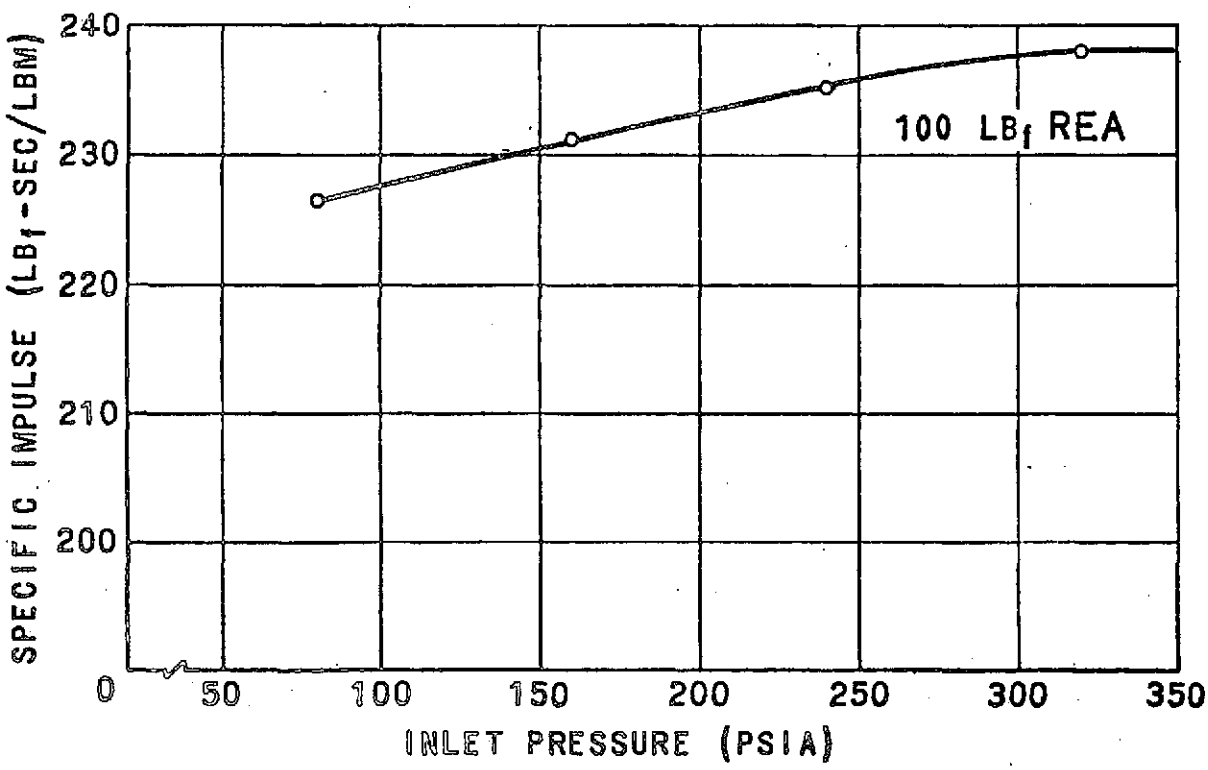

Figure 3.2-33. Orbit Transfer Engine Steady State Specific Impulse vs. Inlet Pressure

c. N-S station keeping

d. Station re-positioning.

To accomplish these functions the OA subsystem would require the addition and relocation of the OA REA's and the possible engine resizing for lower operating thrust levels. A prime engine candidate for the orbit adjust functions would be the 0.28 LB_F RCS engine.

3.2.4.5 Alternatives

An alternate design to the hydrazine OA/OT system is one which utilizes solid propellant motors to accomplish the veolcity changes required by the orbit transfer function. A hydrazine orbit adjust system would then be required for accomplishing attitude control during the orbit transfer burns and for accomplishing small orbit adjust and orbit maintenance velocity changes. A detailed trade of this system versus the all hydrazine system is presented in Report #3. The alternate design was rejected because of higher cost and limited flexibility for alternate mission accomplishment.

3.2.5 WIDEBAND COMMUNICATIONS AND DATA HANDLING

The wideband Communications and Data Handling (C&DH) subsystem includes all mission peculiar equipment which interfaces with the MSS and TM wideband data streams, processes and transmits this data to the appropriate receiver(s). The baseline system design provides for transmission of data at Ku-band to TDRS, dual transmission links at X-band to STDN and X-band transmission of selected data to local user stations. An optional design provides for the deletion of the Ku-band link to TDRS and adds wideband tape recorders and switching to store and play back data at X-band to the STDN.

3.2.5.1 Requirements

Functional Characteristics. The EOS-A Wideband Communication Subsystem accepts, processes and transmits data in real time from a Thematic Mapper (TM) and a Multispectral Scanner (MSS) sensor. Four independent spacecraft-to-ground RF links are provided; a link via TDRS which gives extra-continental coverage for TM and MSS data with a Thematic Mapper Compacted (TMC) data back-up, two identical STDN links for TM and MSS with a TMC back-up, and a Low Cost User (LCU) link for either MSS or

TMC data. The subsystem is compatible with follow-on mission sensors and is modularized for eventual Shuttle serviceability.

Operating Modes. The EOS-A baseline configuration is shown in Figure 3.2-34. Operating modes are as follows:

a. TM and/or MSS with Tracking Beacon via TDRSS. The TMC back-up may replace the MSS data.

b. TM and/or MSS via the dual STDN links. The TMC back-up may replace the MSS data.

c. TMC or MSS via the LCU link based on real time or delayed command.

d. A TDRS acquisition mode for the following sequence of events:

   1. Ground station command via TDRS to enable Ku-band beacon.
   2. Slew EOS dish to illuminate TDRS and enable beacon.
   3. TDRS acquires EOS beacon and autotracks EOS.
   4. TDRS transmits 10 dBw EIRP Ku beacon.
   5. Ground station command via TDRS to acquire TDRS beacon.
   6. EOS acquires and autotracks TDRS beacon.
   7. Ground station command via TDRS to transmit data.
   8. Wideband transmission enabled.

Sensor Multiplexing/Quantizing. The TM channels must be sequentially sampled, quantized, formatted and interleaved with ancillary and telemetry data in a manner which facilitates recovery at the ground station. The baseline design is based on the following parameters:

Analog Channels	84
Thruput bit rate	67×10^6 BPS
Quantization level	7 bits
Swath Time	71 msec
Scan efficiency	80% max

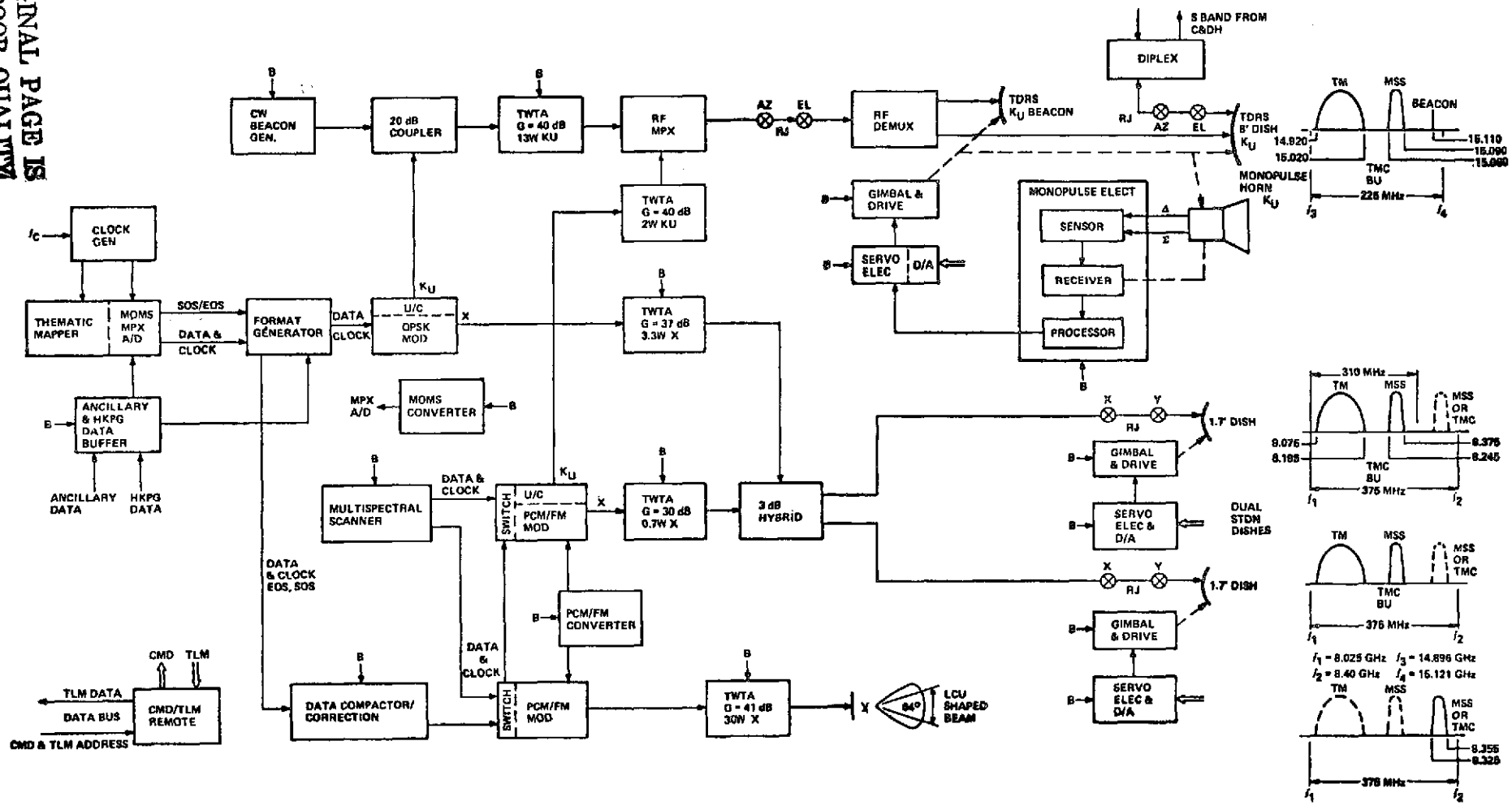

Figure 3.2-34. EOS-A Wideband Subsystem

Analog degradation	$\pm$ 1/2 bit
Aperture ambiguity	50 pico seconds

Compaction Modes. Quantized TM data at 67 MSB will be compacted per the following commandable options.

	Ground Resolution (meters)	Spectral Bands Used	Swath Width	Data Rate After Compaction, Correction and Formatting (MBS)
#1	60 x 60	All 6	full	15
#2	30 x 30	Any 2 of the first 5 Bands + Band 6	1/2	15
#3	30 x 30	All 6	1/4	15
#4	30 x 30	Any 1 of the first 5 Bands + Band 6	full	15

RF Requirements.

a. Frequency allocation - TDRSS 14.896 - 15.121 GHz
STDN + LCU 8.025 - 8.40 GHz

b. Power Flux Density (PFD). The incident PFD at X-band shall not exceed the following limits:

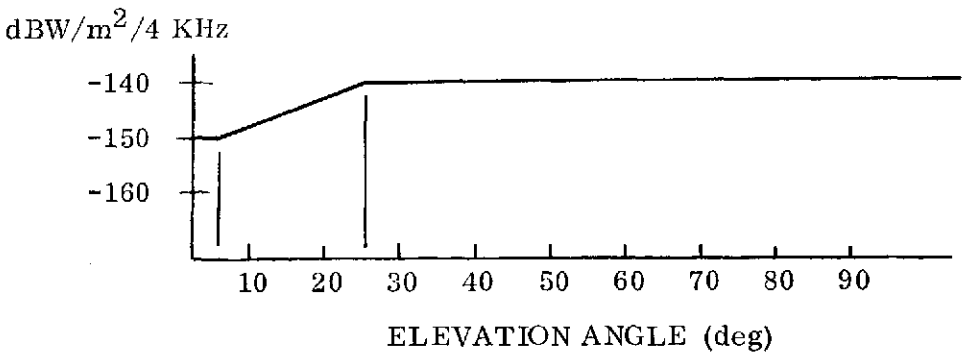

Transmission via TDRSS will conform to the following formula:

$$\text{EIRP (dBW)} \leq \text{DATA RATE (dB)} - 25.1$$

c. Bit Error Rate (BER). The hardware performance parameters, EIRP, link margins and interlink crosstalk will give a BER $\leq 10^{-5}$ for all links under worst case conditions.

d. Spurious Frequencies. Frequencies outside the allocated bandwidths shall be at least 10 dB below the unmodulated carrier level at the band edge and roll off at $\geq$ 18 dB/octave to a level $\geq$ 70 dB below the unmodulated carrier.

e. Antenna Coverage.

STDN. Both dishes pointable over $\pm 60^{\circ}$ from nadir about two axes. Pointing precision $\pm 0.6^{\circ}$.

TDRSS. Dish pointable over $\pm 120^{\circ}$ about two axes. Open loop precision $\pm 0.6^{\circ}$. Monopulse tracking to $\pm 0.2^{\circ}$. Ku-Band beacon at +30 dBW.

LCU. Shaped beam. Beam width is $\pm 32^{\circ}$ from nadir.

3.2.5.2 Baseline Description

Figure 3.2-34 shows the EOS-A baseline wideband subsystem functional block diagram. All pertinent clock, data and power interfaces are shown. For simplicity, detailed command/telemetry lines are omitted. RF spectra and bandwidth allocation of each link are as indicated. Size, weight, power and layout of functional components are shown in Figure 3.2-35.

3.2.5.2.1 Multimegabit Operation Multiplexer System (MOMS)

The MOMS is a high data rate PCM unit consisting of an 84 channel analog multiplexer, an analog-to-digital encoder, and a power converter unit. The basic MOMS building blocks have been tested at thruput rates of 140 megabits/sec with 7 bit resolution, $\pm$ 1/2 bit analog accuracy and a 50 picosecond aperture ambiguity(1). This is well in excess of the EOS requirements.

The converter module contains a switching pre-regulator and DC-DC converter. It accepts the 28 VDC bus and provides the necessary output voltage levels to operate the Multiplexer/Encoder modules.

(1) Multi-Megabit Operation Multiplexer System (MOMS), NAS 5-21690, Radiation Inc., Division of Harris-Intertype Corp., Melbourne, Florida.

WIDEBAND COMPONENT	SIZE - INCHES	WEIGHT - LBS	POWER-WATTS
CMD BEACON GEN	1.4 x 1.3 x 6	2	6
20 dB COUPLER	.2 x 2 x 2	0.1	-
CLOCK GEN	2 x 1 x 3	1	1
DATA BUFFER	2 x 1 x 3	1	1
FORMAT GENERATOR	2 x 1 x 3	1	1
QPSK MOD	6 x 2 x 3	5	12
MOMS CONVERTER	6 x 6 x 5	6	17.5
DATA COMP/CORRECTER	8 x 10 x 4	10	80
TWTA G = 40 dB	5.5 x 13 x 3	8	52
RF MPX	2 x 2 x 3	3	-
TWT G - 40 dB	11 x 3 x 6	5	9
PCM FM MOD	6 x 2 x 4	7	13
REMOTE DEC & MUX	6 x 4 x 2	-	-
PCM FM CONVERTER	6 x 2 x 3	5	4
PCM FM MOD	6 x 2 x 2	5	7
TWTA G = 37 dB	3.8 x 11 x 7.5	7.5	15.2
TWTA G = 30 dB	11 x 4 x 3	4.5	6.4
3 dB HYBRID	2 x 2 x .5	2	-
TWTA G = 41 dB	4 x 8 x 14	13	156
RF DEMUX	2 x 2 x 3	3	-
SERVO ELEC D/A (TDRS)	4 x 4 x 3	5	100
DIPLEX	2 x 2 x 3	4	-
SERVO ELEC D/A (STDN)	4 x 4 x 2	4	30
SERVO ELEC D/A (STDN)	4 x 4 x 2	4	30
MONOPULSE HORN & ELECT	5 x 5 x 18	3	10
TOTAL		109.1	

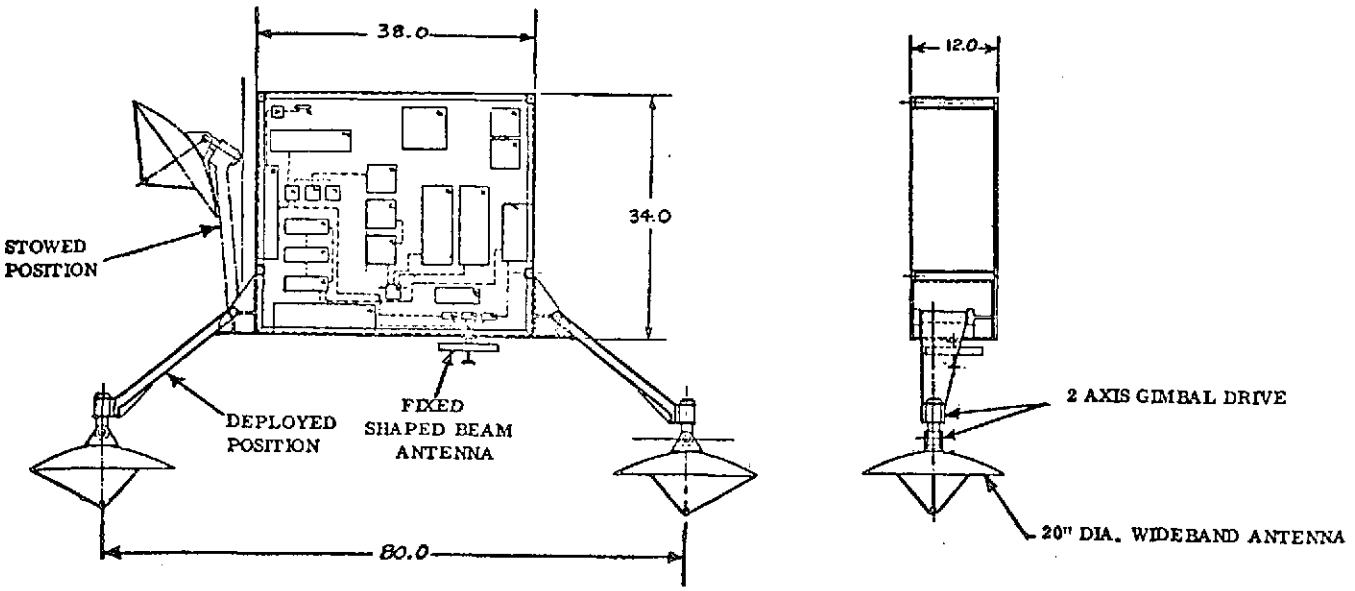

Figure 3.2-35. Wideband Subsystem Module

The Multiplexer/Encoder modules are mounted as an integral part of the Thematic Mapper in order to minimize input lead length (100 inputs) and reduce the possibility of extraneous noise pickup on the single ended input lines. The converter is separately mounted. The Encoder data output is NRZL serial to the Format Generator.

3.2.5.2.2 Format Generator

The Format Generator performs the following functions:

1. Data Reclock
2. Ancillary/TM Data Formatting.

It contains the logic necessary to generate the preamble, MFS, and 1/4 swath ID words and to insert this information into the data stream.

Separate shielded lines are used for the data and the clock signals between the MOMS and Format generator. The signals are both differential to minimize common mode stray pickup. Data signal rise time degradation is removed by the reclocking process.

The baseline data format is shown in Figure 3.2-36. A full swath of data consists of 6200 minor frames or 57 msec. This corresponds to a scan efficiency of approximately 80%. Each swath (major frame) is preceded by a preamble as shown. The preamble pattern is a unique PRN code. This will maintain a spread RF spectrum and thus assure that the PFD requirement is met. Repetative preamble patterns are unsatisfactory since they produce strong line spectra. It should be pointed out that the existing MSS format is unsatisfactory in this respect since the preamble is a repetative pattern consisting of 3 ones followed by 3 zeros lasting up to 10 msec. Strong spectral lines at 2.5 MHz and its odd harmonics will result. It is recommended therefore that the MSS preamble be randomized. The preamble is terminated in a fixed time interval (γ) from the sensor Start of Scan (SOS) or End of Scan (EOS) pulses. The TM scanning mirror is driven in synchronism with the MOMS so that the SOS and EOS are coherent with the data rate.

Each minor frame consists of 88 bit words and is introduced by a unique Minor Frame Sync (MFS) word. Housekeeping data is inserted next, followed by a 1/4 swath ID word.

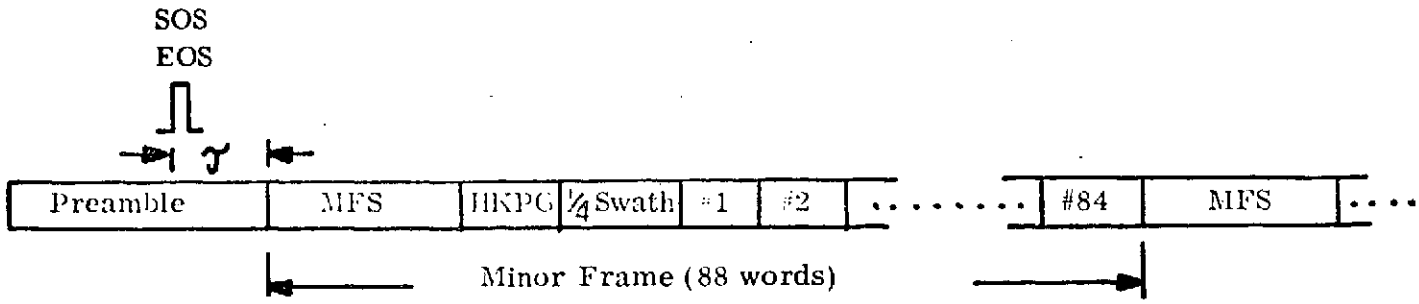

MFS - 14 Bits
HRPG Data - 8 Bits
1/4 Swath ID - 6 Bits
Preamble - PRN Code Pattern - 10 msec
τ = 10 μ sec ± 1 Bit
Ancillary Data Words/Swath - 2 x 10^5 Word Storage Capability

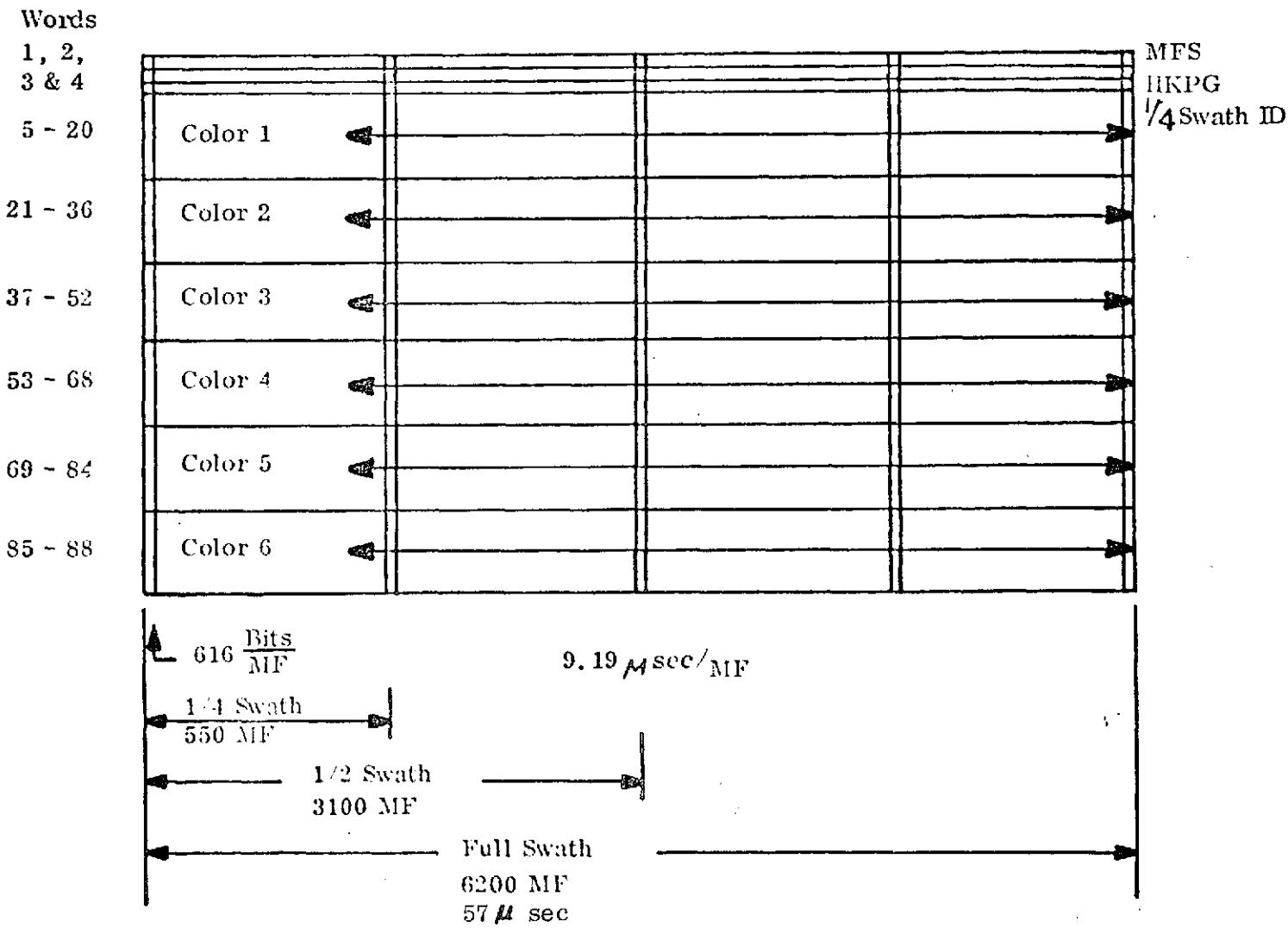

Figure 3.2-36. TM Data Format

The 84 digitized sensor channels complete the minor frame.

Ancillary data is introduced into the data stream in the time period between the end of swath (57 msec) and the preamble initiation (71 msec).

In order to guarantee that the ground bit synchronizer sees enough data transitions (and thereby maintains lock) in the special case where the sensor outputs are saturated (all 1's or all 0's in data stream), it is desirable to introduce bit reversals into the data. The Formattor will therefore automatically reverse the middle three bits of each sensor word in the MF according to a unique random sequence. This will assure bit transitions without a strong line spectra.

3.2.5.2.3 Ancillary/HKPG Data Buffer

Ancillary data is sensor peculiar data which is intimately associated with the sampled data, i.e., Vehicle Attitude, Ephemeris data, Sensor calibration data, Time Code, etc. This information is periodically updated and stored in the OBC memory.

Housekeeping (HKPG) data is the telemetry data sampled by the on-board telemetry processor and is introduced into the wideband stream as a backup to the narrow band C&DH link.

The data buffer interfaces with the OBC and Telemetry Processor, and serves to integrate ancillary data into the wideband format during the "dead time" period following each swath. Telemetry data is buffered and digitally multiplexed by the MOMS. The MF sampling rate 108, 814 words per second, is well in excess of that required for telemetry data.

3.2.5.2.4 QPSK Modulator/Upconvertor

The QPSK Modulator accepts the serial NRZL binary data signal and clock from the Format Generator and performs the following functions:

1. Reclocks Data

2. Differentially Encodes the Data

3. QPSK Modulates the Data. Parallel modulation is employed.

Reclocking restores the rise time in the data signal lines. Differential encoding is employed to resolve the 4 state ambiguity of the QPSK data. Differential encoding is preferable to the use of a unique word, in this case the MFS word, since encoding is more tolerant of carrier slips. In such an event, sync is immediately re-established at the ground station demodulator with encoding, whereas data is immediately lost until resync occurs on the MFS. Also differential encoders and decoders are relatively simple, low cost devices. The disadvantage of differential encoding is a 0.4 dB link degradation since a single dropout yields a double error. This, however, is a small price to pay for the improved data continuity.

Modulation at 400 MHz is employed. The RF spectrum is mixed up to X-band and then mixed up to Ku-band. Parallel modulation at a relatively low frequency is employed since greater design control over modulation performance parameters is possible. Double stage mixing is a convenient means for obtaining simultaneous outputs at both X and Ku-bands. Band limiting filters are used to constrain the TM spectrum to 100 MHz and reduce out of band spurious and cross-talk to the MSS channel. Precise center frequency control is made possible by a reference crystal oscillator.

3.2.5.2.5 Data Compactor/Correction

The Data Compactor/Corrector contains the digital logic, arithmetic circuitry and speed buffer memory necessary to perform the following operations:

1. Compact TM data - 4 commandable options.
2. Provide output data at 15 MBS in the format shown in Figure 3.2-37.
3. Implement the x-correction (scan direction) algorithm which compensates for earth curvature, the non-linear scan angle vs. ground track function and prescribed instrument scan non-linearties.

Data compaction option #1 is accomplished by averaging contiguous pixels resulting in a full swath at reduced resolution. The preamble and auxiliary data are output as

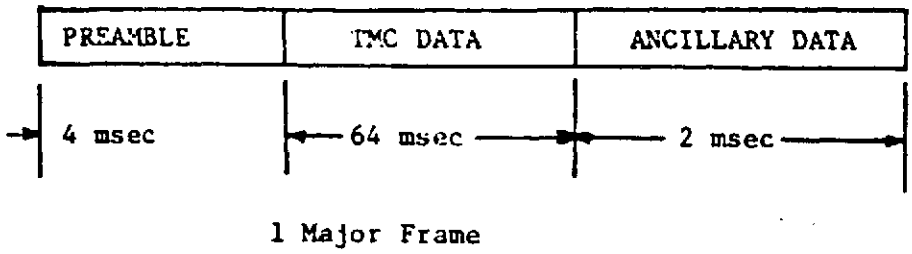

MSF	14 bits (option 4 - 4 bits)
Hkpg Data	8 bits/MF
1/4 Swath I.D.	6 bits (option 4 - none)
Preamble	PRn code pattern
Ancillary Data Words/Major Frame	4285
Bit Rate	15 MBs

TM Major Frame Time equals TMC Major Frame Time.

Figure 3.2-37. TMC Data Format

received except at a lower rate. Averaged pixels are inserted into the data format shown in Figure 3.2-37. Data compaction option #2 is implemented selecting only 2 bands of the first 5 and band 6 for 1/2 of a swath. Storage is necessary since time gaps in the data must be filled on a pre-MF and pre-swath basis. Filler data is added as required in order to maintain an uninterrupted data stream.

Data compaction option #3 is accomplished similar to option #2, except that time gaps in the data input are filled on a per swath basis only.

Data compaction option #4 is accomplished similar to option #2 except that time gaps are filled on a per MF basis alone.

X-correction is accomplished by referencing the output x-displacement to the input data at 16 binary spaced grid point locations, e.g., for 2^{13} pixels the spacing is 512 pixels.

The geometric correction between grid points is linear. The grid points determine the correction desired.

3.2.5.2.6 PCM/FM Modulator

The PCM/FM modulator is an improved version of the ERTS Wideband Modulator. This version has the AFC loop and Reference oscillator deleted resulting in lower size, weight and power. The open loop stability of the S-band VCO's have been extensively tested under thermal vacuum conditions and temperature. Results show that the frequency drift is less than ± 1.5 MHz over a 1 month period. An additional 10 MHz has been added to the MSS RF spectrum for EOS in order to allow for this drift. At worst, a periodic (every few months) retuning of the ground station receivers will be required.

Each PCM/FM modulator (TMC and MSS) unit has redundant commandable VCO's. Simultaneous X and Ku-band outputs are obtained by up converting the S-band signal. Bandwidth limiting is obtained by premodulation filtering. A switching matrix and data reclocking is also supplied. Regulated DC voltage is supplied by the PCM/FM converter unit.

3.2.5.2.7 TWT Amplifiers

Five separate TWT amplifiers are incorporated in the baseline design. The weight, power and sizes are as shown in Figure 3.2-35. The "state of the art" relative to TWT amplifiers is such that either space qualified units or "qualification by similarity" is recommended.

Each amplifier is complete with its own high voltage power supply, output isolator (as a protection against inadvertent mismatches), and band pass filter. The band pass filters spectrally limit both broadband output noise as well as the modulation spectrum.

Because of the highly non-linear nature of the TWT input/output characteristic and inherent AM/PM conversion, it is generally not desirable to amplify two separate signals simultaneously since crosstalk will occur. An exception is made in the case of the CW beacon and the Ku-band QPSK modulator signal. Analysis shows that the crosstalk is at

an acceptable level in this case, thus eliminating an additional TWT.

3.2.5.2.8 RF Mux and Demux

In order to limit the number of rotary joints into the TDRS gimbal to a maximum of two (S and Ku-band) the beacon/QPSK spectrum is multiplexed with the PCM/FM spectrum. This is accomplished with a directional filter. The combined spectrum is sent thru the rotary joint as shown in Figure 3.2-34. At the antenna the beacon is stripped off, again by means of a directional filter in the Demux and routed to the TDRS beacon antenna. The TM and MSS signals are routed to the Ku-band feed on the 8 ft. dish. Although the Ku beacon dish is shown as a separate antenna, the beacon is actually diplexed into the sum port of the monopulse horn. The horn then serves as the EOS beacon radiator and the receive antenna for the TDRS beacon.

3.2.5.2.9 Antenna Gimbals

In selecting the gimbal axis arrangement for two degrees of freedom, there is a choice between a pitch/roll or azimuth/elevation configuration. The results of studies made by General Electric (Ref. TIS 70SD205) on the tracking of a synchronous satellite indicate that the azimuth/elevation approach is more general, versatile and compatible with auto tracking requirements than the pitch/roll configuration. The azimuth/elevation configuration is proposed for the TDRS gimbal. For the wideband STDN gimbal, a pitch/roll axis arrangement similar to that used on Nimbus T&DRE gimbals is applicable.

Both the TDRS and STDN antennas will require either rotary waveguide joints or a flexible RF cable. Rotary joints are recommended because of the continuous motion over the life of the spacecraft and the large angular travel required. The STDN dishes are configured for a single joint for each of two axis. The TDRS gimbal is configured for the coaxial joint (S and Ku-band) for each of two axes. Coaxial joints have been successfully applied by GE on the S-193 Skylab program. Only slip rings are required for the monopulse since the electronics package is mounted on the horn.

3.2.5.2.10 Monopulse Subsystem

The Monopulse Subsystem functions to acquire the TDRS Ku-band beacon (10 dBW at 13.75 to 13.80 GHz) and point the high gain 8 ft. dish to TDRSS within 0.1^{o}. The system proposed is a modified version of the monopulse presently being manufactured by GE for the Japanese Broadcast Satellite. The GE system is configured for:

Operating Frequency	14.0125 GHz
Sensitivity (at Feed)	-144.4 dBW
Acquisition Range	$\pm 9^{o}$
Maximum Allowable Error	0.02^{o}
Response Time	1 second
Size	5 x 5 x 18 inches
Weight	3 lbs.
Power	10 watts

The EOS requirements are:

Operating Frequency	13.75 to 13.80 GHz
Sensitivity (at FEED)	-168.6 dBW
Acquisition Range	$\pm 3^{o}$
Maximum Allowable Error (3σ)	0.2^{o}.

The sensitivity will be improved the required 24.2 dB by incorporating a Tunnel Diode amplifier. The required SNR will be obtained by reducing the signal bandwidth and therefore increasing the response time.

The monopulse system consists of a Sensor, Receiver, and Low Frequency Processor. The sensor employs a high performance circular horn antenna utilized as a mode converter which produces a difference pattern similar to other monopulse antennas but requires less space and weight. The horn is corrugated to give good sidelobe suppression. Orthogonal sum ports are provided for use as sensing references.

The time-shared single channel receiver approach is employed in order to minimize relative drift between the delta and sum channels. A ferrite time-share switch and biphase modulator is interposed between the antenna and receiver to condition the incoming

RF signal for single-channel processing. A highly selective band pass filter at the input of the receiver protects the system against undesirable signals. Carrier drift is tracked out by a phase locked loop.

The low frequency processor separates sum and difference channels, provides low pass filtering and supplies the azimuth and elevation error drive signals to the antenna gimbal.

The TDRS/EOS beacon link calculations are shown in Table 3.2-16. The margin is 1.5 dB and probably inadequate for such a system. Improved performance in terms of static precision, dynamic tracking error, acquisition time and system margin can be obtained at higher beacon EIRP. A 6 dB margin should be incorporated and therefore a 4.5 dB increase in EIRP is recommended.

3.2.5.2.11 Antennas

EOS/TDRS Antenna

A study of the possible antenna/feed configurations satisfying the EOS/TDRS requirements resulted in the one shown in Figure 3.2-38. The main radiator consists of a furable parabolic reflector. The S/Ku band coaxial feed is mounted at the focal point of this reflector (and associated hyperbolic surface). The Ku band beam width is 0.6^{o} and 1° at S-band. The stowed profile is as shown.

Monopulse reception and beacon transmission is achieved via the 1 ft. parabolic reflector and the monopulse corrugated horn feed located at the focal point. The resulting beam width at Ku band is 5°. The monopulse electronics is package surrounding the horn. A shielding reflective shroud surrounds the 1 foot dish.

The baseline configuration was selected for the following reasons:

1. A high degree of isolation is possible between the low level monopulse receive dish and the broadband high level Ku band transmitted signal. This is essential since both are at K band.
2. Only a single feed is required for the Monopulse and Beacon, essentially C.W., signals.

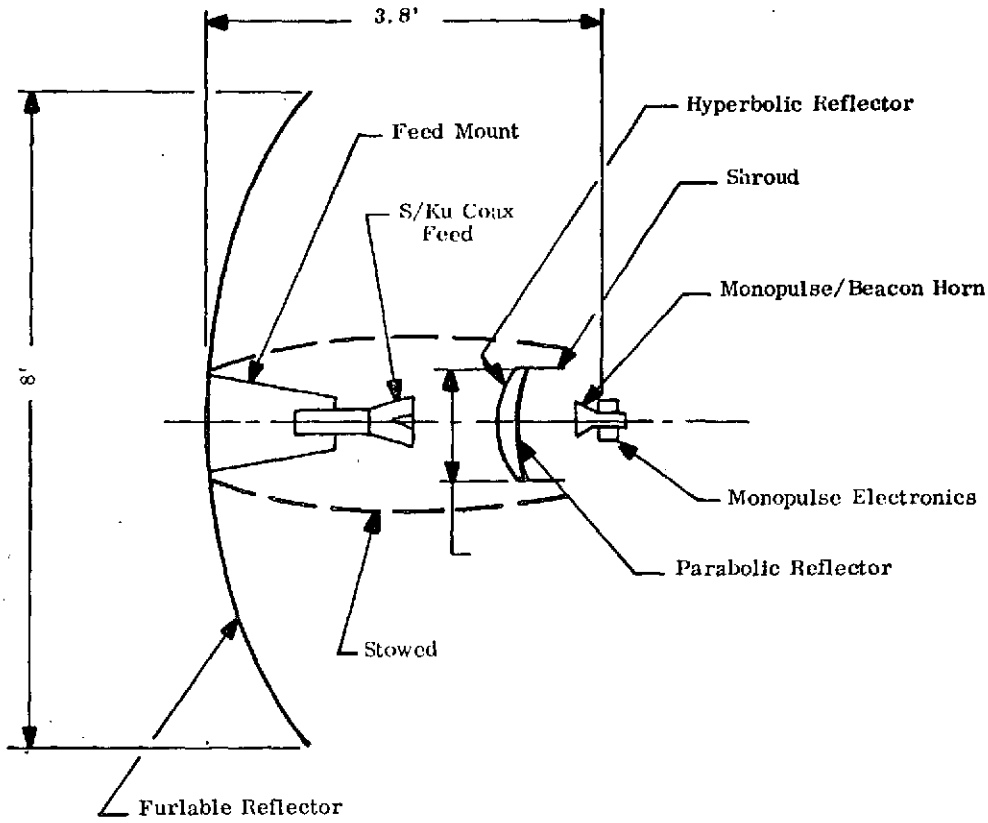

Figure 3.2-38. Cassegrainian Baseline Configuration for EOS/TDRS Antenna

3. The coaxial S/Ku band feed results in minimum hardware without a sacrifice in radiation performance.
4. Packaging the monopulse electronics on the horn obviates the need for an additional rotary joint.
5. The mechanical configuration is compatible with the broad beam requirements of the monopulse/beacon and the narrow beam requirements of the S/ku band link.
6. The close proximity of monopulse and S/Ku band feed reduces the probability of misalignment of their respective bore-sites.
7. Furlability reduces space requirements.

3.2.5.2.12 Link Performance

Margin calculations for the STDN, LCU and TDRS links are shown in Tables 3.2-9 thru 3.2-17.

Table 3.2-9. STDN Link - X-Band TM @ 100 Mbps

TWTA Power Output (0.83 w) dBm		29.2	
R.F. CKT Losses	dB	-2.0	
S/C Antenna Gain	dB	30.0	
EIRP	dBm		57.2
S/C Antenna Pointing Loss	dB	-2.0	
Space Loss (@ 3600 KM & 8.4 GHZ)	dB	-182.1	
Propagation Loss	dB	-4.5	
Received Signal	dBm		-131.4
Receive Antenna Feed and Pointing Loss	dB	-1.8	
Polarization Loss	dB	-0.2	
Receive Antenna Gain (30' @ 8.4 GHZ)	dB	55.4	
Total Receive Signal	dBm		-78.0
Receive Noise Density (165°K)	dBm/Hz	-176.4	
Receive Noise B.W. (100 MHz)	dBHz	80.0	
Link Noise	dBm		-96.4
Link SNR (in 100 MHz)	dB		18.4
Required SNR (for 10^{-5} BER)	dB		13.4
Link Margin before Equalization	dB		5.0
SNR Equalizer Improvement Factor	dB		1.7
Link Margin after Equalization	dB		6.7
Additional Margin @ 67 Mbps +1.7	dB		1.7
		Link Margin	8.4

PFD Calculation

Assume 500 nm, S/C Antenna Gain = 33 dB

TWTA Power = 29.2 dBm; Propagation Loss - -0.5 dB

R.F. CKT Losses - 1.0 dB

EIRP = 33 - 0.8 - 1.5 = 3 - .7 dBw

$$\text{PFD/4KHz} = 2 \times \frac{\text{EIRP} \times 4000}{\Delta f \times 4\pi R^2} = R$$

$$= 3 \times 30.7 \times 10 \log (4 \times 10^3) - 10 \log (10^8) - 10 \log 4\pi - 20 \log R$$

$$= -140.7 \text{ dBm/m2/4KHz}$$

Table 3.2-10. STDN Link - X-Band TM + HRPI @ 200 Mbps

TWTA Power Output (0.83 w) (per X-Band TM @ 100 mbps)	dBm	29.2	
Receive Noise Density (165° K)	dBm/Hz	-176.4	
Receive Noise BW (200 MHz)		83.0	
Link Noise	dBm		-93.4
Link SNR (in 200 MHz)	dB		15.4
Required SNR (for 10^5 BER)	dB		13.4
Link Margin before Equalization	dB		2.0
SNR Equalizer Improvement Factor	dB		1.7
Link Margin after Equalization	dB		3.7

PFD Calculation

3 dB improvement over TM @ 100 mbps since same power spread over twice the band width

Table 3.2-11. STDN X-Band 15 Mbps Link - MSS and TMC Data

TWTA POWER OUT (0.35 W)	dBm	25.4	
R.F. CKT Losses	dB	-2.0	
S/C Antenna Gain	dB	30.0	
EIRP			53.4
S/C Antenna Pointing Loss	dB	-2.0	
Space Loss @ 3600 Km and 8.4 GHz)	dB	-182.1	
Propagation Loss	dB	-4.5	
Received Signal	dBm		-135.2
Received Antenna Feed and Point Loss	dB	-1.8	
Polarization Loss	dB	-0.2	
Received Antenna Gain (30' @ 8.4 GHZ)	dB	55.4	
Total Receive Signal Power	dBm		-81.80
Receive Noise Density (165° K)	dBm/Hz	-176.4	
Receive Noise B.W. (23 MHz)		73.6	
Link Noise	dBm		-102.80
Link SNR (in 23 MHz)	dB		21.0
Required SNR (for 10^{-5} BER)	dB		14.0
Link Margin	dB		6.0

EIRP = 33 - 4.6 - 1.5 = 26.9 dbw

$= 26.9 + 10 \log (4 \cdot 10^3) - 10 \log (2 \cdot 10^7) - 10 \log 4\pi - 20 \log R$

PFD/4 KHz

$= -140.6$ dBw/m^2/4 KHz

Table 3.2-12. LCU X-Band 15 Mbps Link - MSS and TMC Data

TWTA Power Out	dBm	P_o		
R.F. CKT Losses	dB	-2.0		
S/C Antenna Gain (± 32°)	dB	10.0		
EIRP				$8 + P_o$
Space Loss @ 940 Km, 8.4 GHz	dB	-171.0		
Propagation Loss	dB	-4.5		
Received Signal	dBm		P_o	-167.50
Receive Feed and Pointing Losses	dB	-2.0		
Receive Antenna Gain (D = 6')	dB	41.0		
Total Receive Signal	dB		P_o	-128.50
Receive Noise Density (240°K)	dBm/Hz	-174.8		
Receive Noise B.W. (23 MHz)	dB Hz	73.6		
Link Noise	dBm			-101.2
Link SNR (in 23 MHz)	dB		P_o	-27.30
Required SNR (for 10^{-5} BER)	dB			14.0
Link Margin	dB			3.0
TWTA Power Out	dBm			44.3
TWTA Power Out	watts	26.9		

PFD Calculation + Propagation Loss - 0.5 dB; R.F. CKT Losses - 1.0 dB
Antenna Gain 10 dB
EIRP (dBw) = 1.5 + 10 = P_o + 8.5

$$PFD/4KHz = P_o + 8.5 + 10 \log (4 \cdot 10^3) - 10 \log (2 \cdot 10^7) - 10 \log 4\pi$$
$$20 \log (.946 \times 10^6)$$

$$P_o = -140 - 8.5 - 36 + 73 + 11 + 119.5 = 19 \text{ dBw}$$

$$P_o \text{ max} = 19 \text{ dBw}$$

Table 3.2-13. TDRSS Ku-Band 100 Mbps Link TM Data

EOS EIRP	dBw	EIRP	
EOS Pointing Loss (with monopulse)	dB	0.0	
Polarization Loss	dB	-0.5	
Space Loss		-209.2	
TDRS Pointing Loss	dB	-0.5	
TDRS Antenna Gain	dB	52.6	
TDRS Receive Power	dBw		EIRP -157.60
TDRS Transponder Loss	dB	-2.0	
QPSK System Degradation Loss	dB	-3.8	
TDRS QPSK Degradation (EOS + GND sta.)	dB	-1.5	
System Margin	dB	-3.0	
TDRS Receive Power	dBw		EIRP -167.90
TDRS Receive Noise Density ($T_S = 710^oK$)	dBw/Hz	-200.1	
Receive Noise B.W. (100 MHz)	dB Hz	+80.0	
Receive Noise	dBw		-120.1
Receive SNR (in 100 MHz)	dB		EIRP -47.80
Required SNR (10^{-5} BER)	dB		9.6 (Theoretical)
Required EOS EIRP	dBw		57.4
EOS R.F. CKT Losses	dB	-2.0	
EOS Antenna Gain (8' Dish)		48.92	
Required Power Amplifier Output (11.2 watts)	dBw		10.48
Additional Margin @ 67 MBP	dB		+1.7

Table 3.2-14. TDRSS Ku-Band 200 Mbps Link TM + HRPI

EOS EIRP	dBw	EIRP	
↑ TDRSS PER TDSS KU BAND 100 Mbps LINK TM DATA ↓			
TDRSS Receive Noise Density ($T_S = 710^oK$)	dBw/Hz	-200.1	
Receive Noise Bw (200 MHz)	dB Hz	+83.0	
Receive Noise	dBw		-117.1
Receive SNR (inn 200 MHz)	dB		EIRP -50.80
Required SNR (10^{-5} BER)	dB		9.6
Required EOS EIRP	dBw		60.4
EOS R.F. CKT Losses	dB	-2.0	
EOS Antenna Gain (8' Dish) (BW = 0.6^o)		48.92	
Required Power Amplifier Output	dBw		13.48

Table 3.2-15. TDRSS Ku-Band 15 Mbps Link - MSS and TMC Data

EOS EIRP	dBw	EIRP		
EOS Pointing Loss (with monopulse)	dB	0.0		
EOS Polarization Loss	dB	-0.5		
Space Loss	dB	-209.2		
TDRS Pointing Loss	dB	-0.5		
TDRS Antenna Gain	dB	52.6		
TDRS Receive Power	dBw		EIRP	-157.6
TDRS Transponder Loss	dB	-2.0		
System Margin		-3.0		
TDRS Receive Power	dBw		EIRP	-162.6
TDRS Receive Noise Density ($T_S = 710^oK$)	dBw/Hz	-200.1		
Receive Noise Bw (23 MHz)	dB Hz	73.6		
Receive Noise	dBw			-126.50
Receive SNR (in 23 MHz)	dB		EIRP	-36.10
Required SNR (10^{-5} BER)	dB			14.0
Required EIRP	dBw			50.1
R.F. CKT Losses	dB	-2.0		
EOS Antenna Gain (8' Dish)		48.92		
Required Power Amplifier Output (2 watts)	dBw			3.18

Table 3.2-16. TDRSS/EOS Ku-Band Beacon

C.W. Beacon EIRP	dBw	+10.0	
Space Loss	dB	-208.6	
Monopulse Antenna Gain	dB	30.0	
Monopulse Receiver Power	dBw		-168.6
Monopulse Receive Noise ($T_S = 710^oK$)	dBw/Hz	-200.1	
Receive Noise Bw (0.01 Hz)	dB	-20.0	
Receive Noise	dBw		-220.1
Receive SNR	dB	51.50	
Receive SNR for 0.2^0 Error	dB	50.0	
System Martin	dB		1.5

Table 3.2-17. QPSK Link - Degradation Summary

Degradation Source	Transmitter		Receiver	
	Specification	Degradation (dB)	Specification	Degradation (dB)
Short-Term Freq. Stability	1 deg rms, 500 kHz PLL	0.05	1 deg rms, 500 kHz PLL	0.05
Phase Jitter due to Thermal Noise	---	---	1 deg rms	0.05
Static Phase Error	---	---	± 2 deg	0.10
Modulator Phase Unbalance	± 2.5 deg	0.15	---	--
Modulator Amplitude Unbalance	± 3%	Negligible	---	--
Modulator Rise Time	0.1 x symbol period	0.25	---	--
AM/PM Conversion Factor	6 deg/dB	1.20	---	--
Bandwidth Limiting and Data Detector Mismatch	300 MHz (min)	---	300 MHz (min)	0.90
Amplitude Variation (over ± 120 MHz)	1 db Tilt	Negligible	1 dB tilt	Neglig.
	1.5 dB p-p Ripple	0.15	1.5 dB p-p Ripple	0.15
Parabolic Phase	15 deg	0.25	15 deg	0.25
Cubic Phase	15 deg	0.15	15 deg	0.15
Phase Ripple	12 deg	0.35	12 deg	0.35
Data Asymmetry	1.1	0.15	---	--
Clock Stability	6 deg rms, 10 kHz PLL	0.05	6 deg rms, 10 kHz PLL	0.05
Data Synchronization	Skewed 0.5 bit ± 0.25 bit	Included in AM/PM Factor	---	--
Total Degradation		1.75 dB		2.05 dB

The salient assumptions made in the link analysis are summarized as follows:

STDN X-Band TM Data at 100 Mbps.

- Propagation loss consists of attenuation due to cloud cover, rain and atmospheric attenuation.
- Required SNR (for 10^{-5} BER) is based on GE analysis of QPSK degradation parameters summarized in Table 3.2-17.

  $1.75 + 2.05 + 9.6$ (Theoretical) $= 13.4$ dB
- SNR Equalizer Improvement factor is the expected improvement due to a 5 section adaptive equalizer incorporated in the ground station demodulator.
- PFD calculation is based on a worst case condition of a $\left(\frac{\sin x}{x}\right)^2$ modulation spectrum, no cloud cover or rain, only a 1.0 dB RF circuit loss and a 3 dB higher S/C antenna gain.
- An additional margin is included for operation at 67 mbps. However, a lower EIRP will be required in this case to meet the PFD requirement. It should be noted that adequate link margin is obtained with a 3 dB transmitter power reduction. Therefore, for TM alone, a 1 watt TWTA will suffice. The 3.3 watt unit is used to cover TM + HRPI operation.

STDN X-Band TM + HRPI Data at 200 Mbps.

- The same assumption used for TM only apply.
- A 3 dB improvement in spectrum spreading occurs since the EIRP is unchanged.

STDN X-Band 15 Mbps MSS or TMC Data

- Receive noise bandwidth is estimated at 23 MHz. However, adequate link margin is obtained even if this degrades to 30 MHz.
- The required SNR for 10^{-5} BER is obtained from actual measurements made at the ERTS ground station.

LCU X-Band 15 Mbps MSS and TMC Data

- The shaped beam antenna gain is estimated based on trading off "on axis" gain for "off axis" gain.
- Space loss is based on attentuation at a distance corresponding to $\pm 32^{\circ}$ off-axis.
- Receive noise density is based on an uncooled parametric amplifier at the ground station.

TDRS Ku-Band 100 Mbps TM Data

- The pointing loss with monopulse is assumed negligible.
- An estimated 1.5 dB QPSK degradation is included due to phase, filter and AM/PM anomalies in the TDRS hardware.
- An additional 1.7 dB margin is included for 67 mbps operation. It should be noted that adequate margin is obtained in the TDRS link for TM only using a 6 foot dish at approximately 20 watts TWTA power without using the additional margin due to 67 mbps operation.

TDRS Ku-Band 200 Mbps TM + HRPI Data

- An 8 foot dish is required in the case of TM + HRPI data.

TDRS Ku-Band 15 Mbps or TMC Data

- A 23 MHz bandwidth receiver is assumed at the TDRS ground station. Wider bandwidths will, of course, require a higher EOS EIRP.
- Operation with an 8 foot dish is assumed. A 6 foot dish will require a higher (2.5 dB) EIRP.

TDRS/EOS Ku-Band Beacon

- A +10 dBW EIRP is stated in the TDRS user guide. It is recommended that a higher system margin be obtained by increasing this by 4.5 dB and thereby obtain a 6 dB margin.

3.2.5.3 Alternate Subsystem Configurations

A number of alternates to the baseline configuration may be implemented if required:

Wide Band Recorder Option

The TDRS spacecraft equipment complement may be deleted and extra continental coverage achieved via the use of on-board recorders. In this case two Wide Band Video Tape Recorders, i.e., redundant, of the design presently being used on the ERTS vehicle can be used to record/play back MSS or TMC data at 15 mbps. A single HDMR 240 mbps recorder can be employed to record/play back the TM data at 100 mbps at approximately 2.4 times as much total recording time. The electrical interfaces and switching between the QPSK and PCM/FM modulators and recorders can be designed such that compatibility

with either configuration is guaranteed. The TDRS TWTA's, beacon, coupler Mux/Demux, monopulse, and antenna/gimbal equipment are the equipments replaced.

STDN and LCU Links at Ku-Band

The baseline will be implemented such that the STDN and LCU links may be readily converted from X to Ku band. Assuming that a 30 foot dish at Ku band is available at the STDN ground station, the S/C antenna may be reduced to 1.3 ft. diameter thereby maintaining the same PFD and link margin at the same S/C power level. Maintaining the same dish size reduces beam width and increases the open loop pointing precision required. Since a Ku band feed is required anyway, changing antenna size introduces little additional complexity and expense.

The STDN X-band TWT's, 3 dB hybrid, associated R.F. cabling and rotary gimbal joints will be replaced with Ku band hardware. It is expected that a slightly higher power level will be required since the Ku band losses are higher than at X-band.

The LCU PCM/FM modulator will be replaced with a Ku band up-convertor, and the shaped beam antenna replaced with a Ku band unit of identical beam width in order to achieve coverage within a 500 Km diameter of nadir. This, however, poses a problem at the LCU station since the same antenna size (6') is required to maintain the link margin. The beam width at Ku band is, however, reduced to 0.8° which makes an open loop, programmed track problematical. Higher spacecraft EIRP is used resulting in a smaller dish requirement on the ground.

Omission of LCU Link.

The LCU link may be readily removed from the baseline by deleting the Shaped Beam Antenna, the TWTA and the associated PCM/FM modulator. An estimated 200 watts operating power reduction will result.

3.2.6 ACS MODULE

The ACS requirements for EOS-A, as determined by systems analysis of the payload requirements, are shown graphically in Figure 3.2-39. The requirements agree closely with those required by the GSFC specification (Figure 3.1-18). The yaw static requirement is the tightest requirement, .007 deg., with pitch and roll static requirements being 0.008 degrees. These accuracies can be met by the selected ACS (Table 3.1-8) which has a static capability of 0.0044^{o} in pitch, 0.0057^{o} in roll, and 0.0021^{o} in yaw. The peak jitter errors are 3.6×10^{-4} deg. for all frequencies above 10^{-4} rad/sec, 5.1×10^{-5} deg. for all frequencies above 5×10^{-3} rad/sec, and 10^{-5} deg. for all frequencies above 0.2 rad/sec. The errors are well within the requirements.

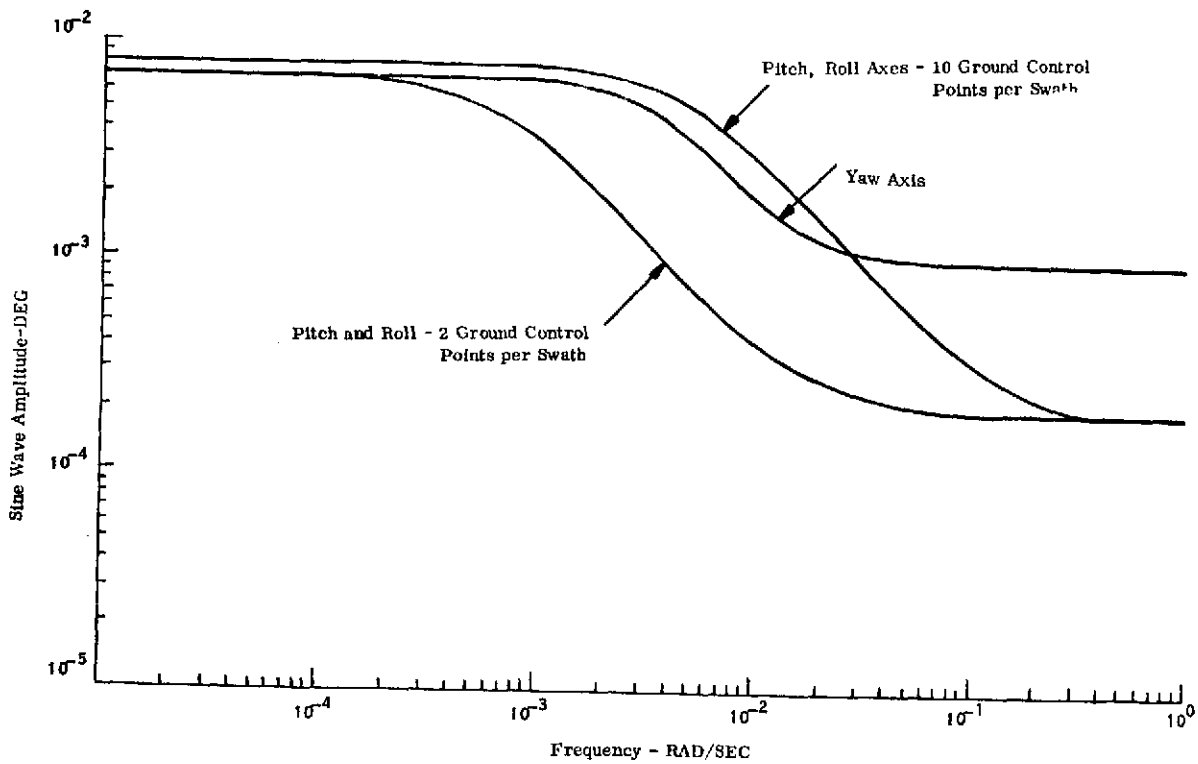

Figure 3.2-39. EOS-A Spacecraft Altitude Requirements

3.2.7 SOLAR ARRAY

The power subsystem requires a mission unique solar array and associated shunt dissipator panel in addition to the standard Power Module (discussed in Section 3.1.5). The unique requirements, a description of these power subsystem items and their performance

are included in this section.

3.2.7.1 Requirements

Figures 3.2-40 and 3.2-41 give the trapped electron and proton components of the particle radiation environment in the selected EOS-A orbit. These trapped environments were obtained by interpolating between the corresponding environments established in references 1 and 2 given at the end of this section. The solar flare proton integral spectrum shown in Figure 3.2-42 was obtained from reference 3 assuming that one large event, which represents the measured fluence during the August 1972 period, occurs during the two year mission. The shielding afforded by the geomagnetosphere has been accounted for by using the established relationships for fraction of interplanetary fluence which would be encountered as a function of orbit altitude and inclination. The spectrum given in Figure 3.2-42 has been corrected to reflect the magnetic shielding in the selected EOS-A orbit.

3.2.7.2 Description

The solar array design concept for the basic EOS spacecraft is shown in Figure 3.2-43 and an outline drawing is given in Figure 3.2-44. A modular construction approach has been utilized to permit easy growth in the array capability for follow-on missions. The basic array building block unit is the subpanel shown in Figure 3.2-45. Each subpanel consists of a 6.4 mm (0.25 in.) thick honeycomb substrate on which three solar cell circuits are mounted. Each circuit consists of a matrix of 308 20x40 mm cells which are connected 77 in series by 4 in parallel. Four of these standardized subpanels are mounted on a built-up aluminum frame structure to form a solar array panel. Three such panels are hinged together to form the complete solar array assembly with a total of 11,088 20x40 mm cells configured into 36 diode-isolated parallel circuits.

Table 3.2-18 summarizes the pertinent design features of this solar array. The solar cell/coverglass combination has been selected to give a high performance-to-cost figure-of-merit. The cells are standard production 20x40 mm cells with the exception that tantalum pentoxide (Ta_2O_5) is used as the cell anti-reflective (AR) coating. When used

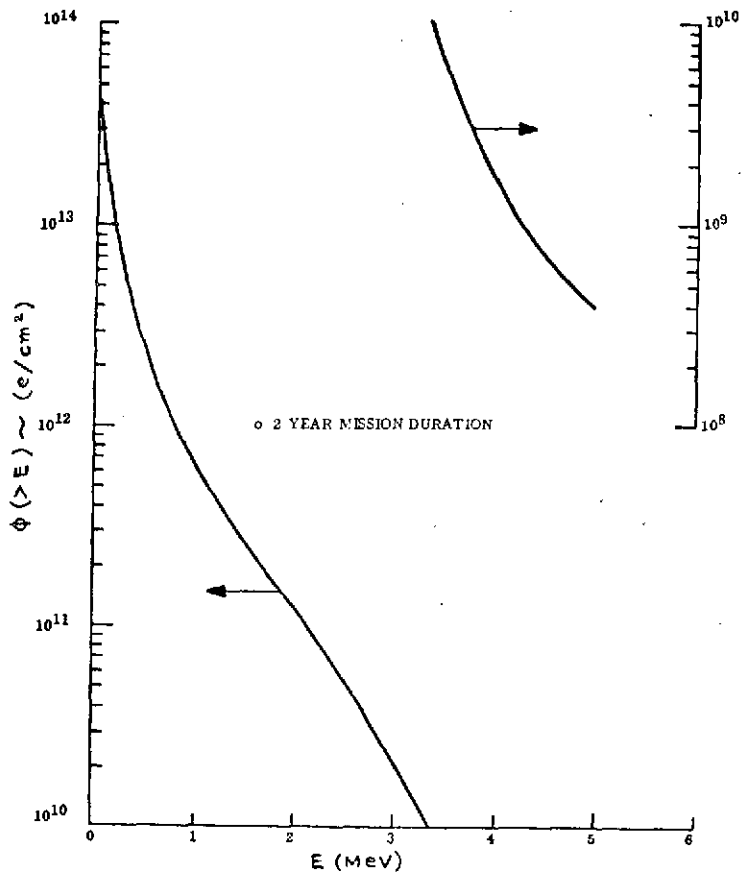

Figure 3.2-40
Omnidirectional Trapped Electron
Spectra for 775 km (418 nm)
Altitudes Sun-Synchronous Orbit

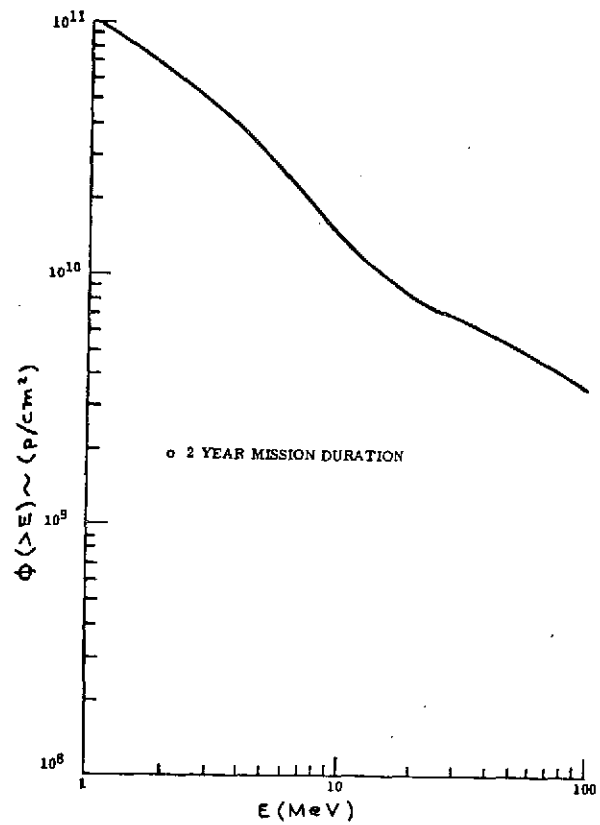

Figure 3.2-41
Omnidirectional Trapped Proton
Spectra for 775 km (418 nm)
Altitude Sun-Synchronous Orbit

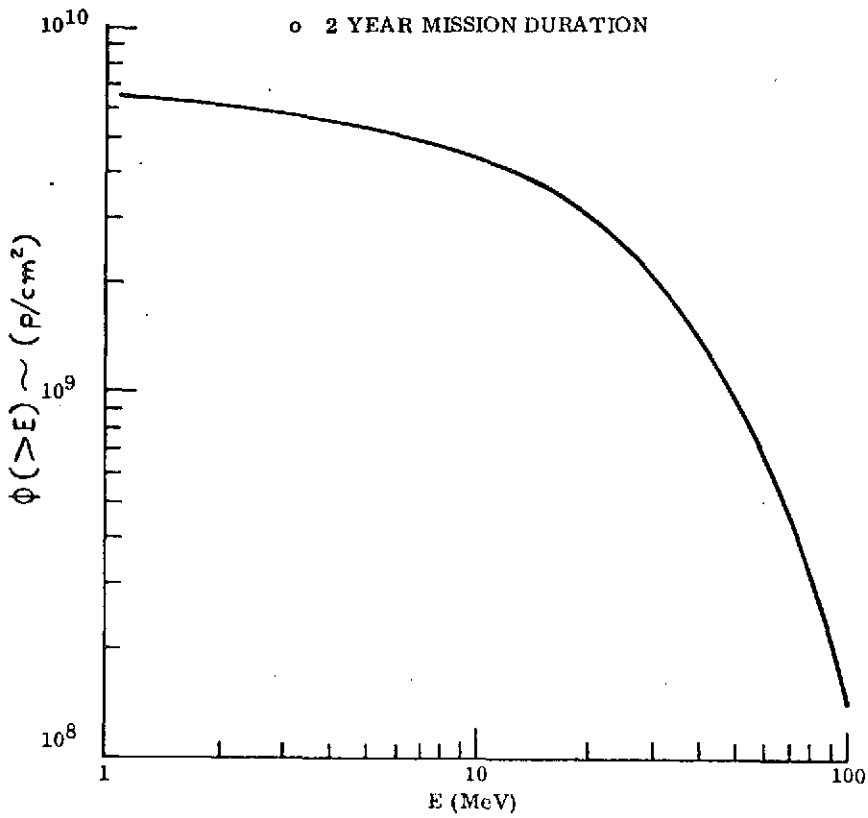

Figure 3.2-42
Omnidirectional Solar Flare Proton Spectra
for 775 km (418 nm) Altitude Sun-Synchronous Orbit

in conjunction with a low cut-on coverglass (~350 nm), this AR coating results in approximately 5 percent improvement in covered performance when compared to the conventionally used silicon monoxide AR coating with a higher coverglass cut-on (~410 nm).

The coverglass is specified as fused silica with a 350 nm cut-on filter or a 5 percent ceria stabilized Pilkinton Perkin-Elmer coverglass which has a natural cut-on at about the same wavelength. The selection of one over the other will depend on price and delivery at the time of procurement.

A silver plated Kovar interconnector system has been specified to allow the use of the standardized solar array subpanel over a range of temperature from +70°C to -170°C. This range will accommodate orbit altitudes which range from EOS-A at 418 nm to SEOS at geosynchronous altitude.

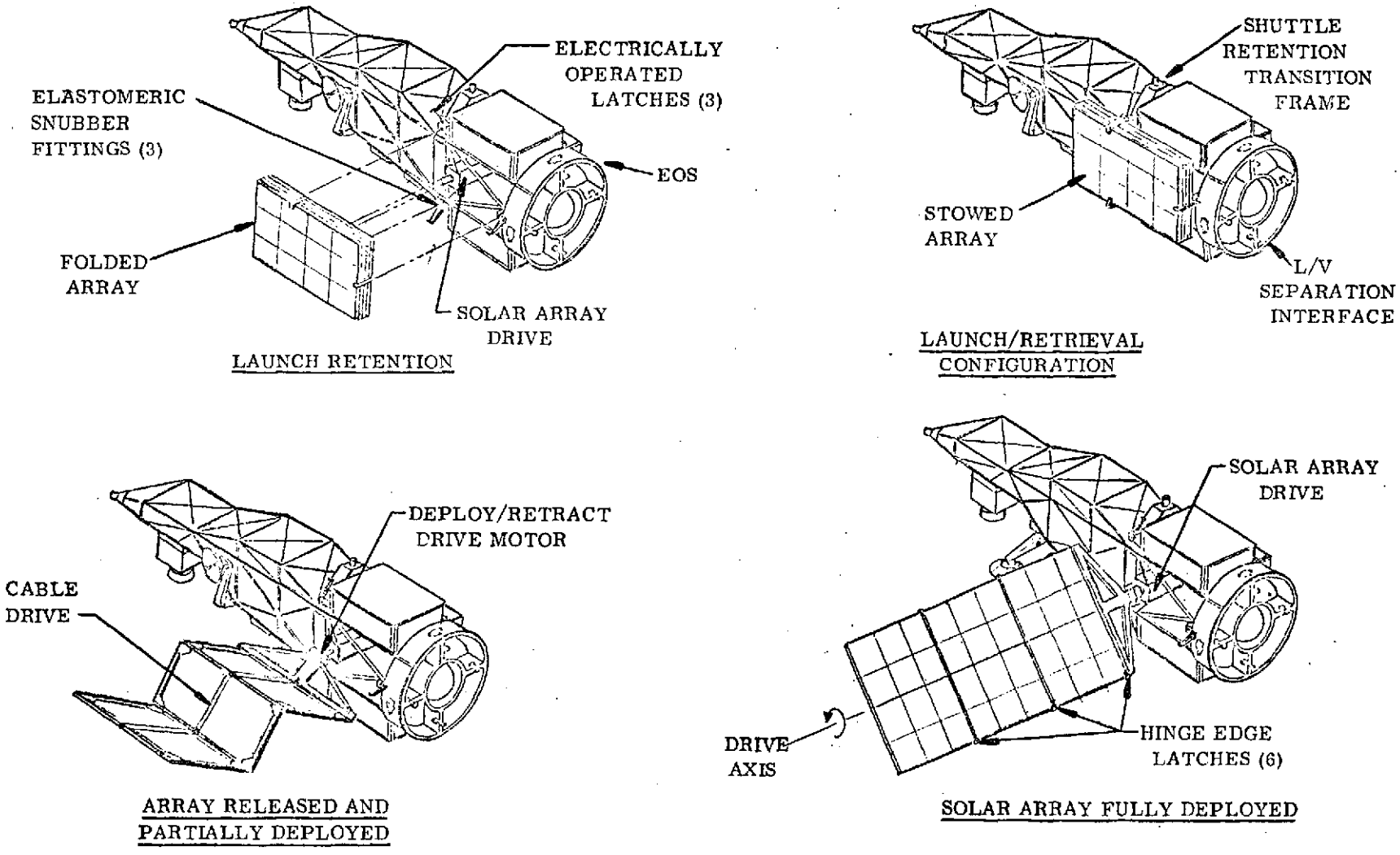

Figure 3.2-43. Solar Array Retention and Deployment

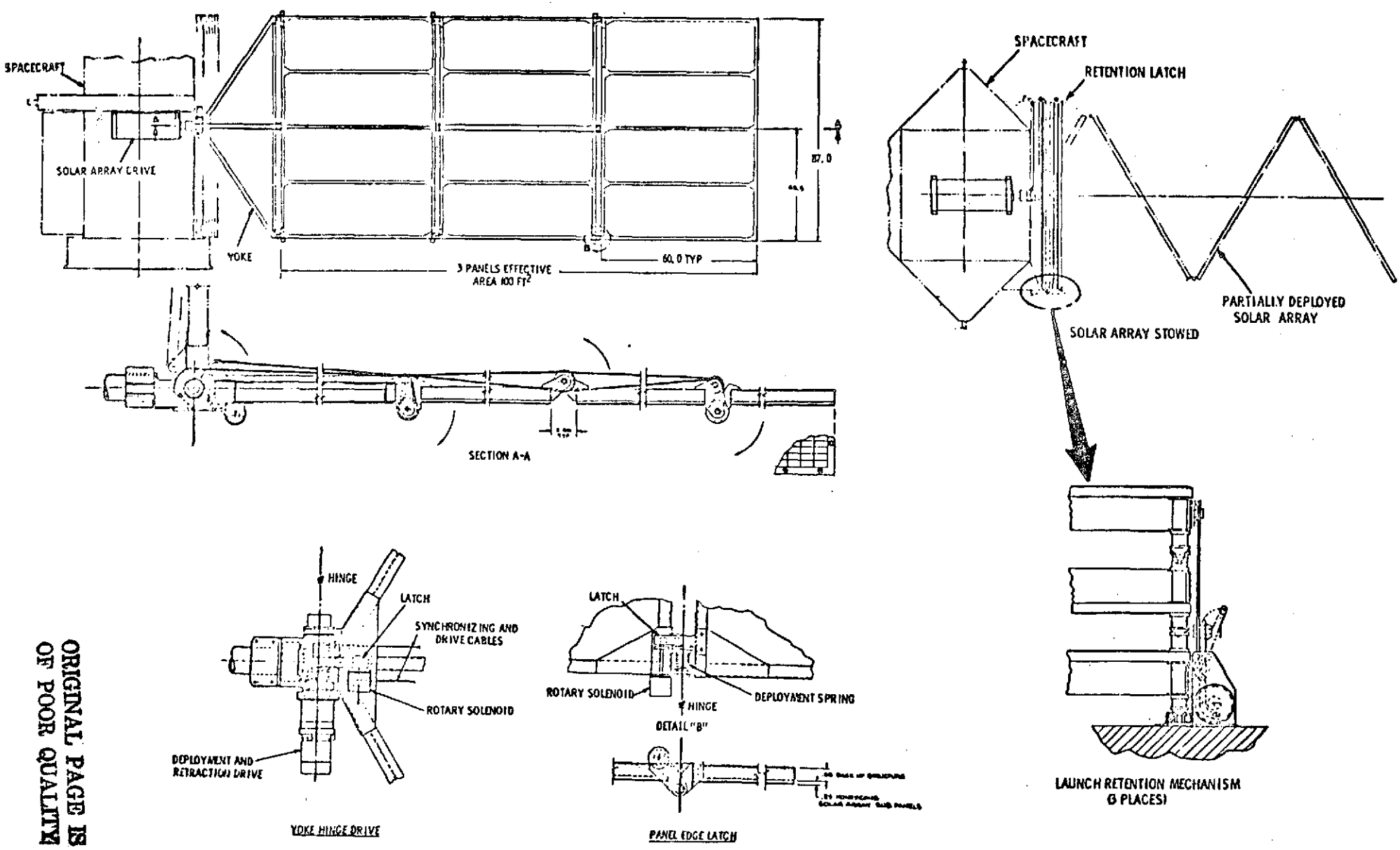

Figure 3.2-44. Solar Array Assembly

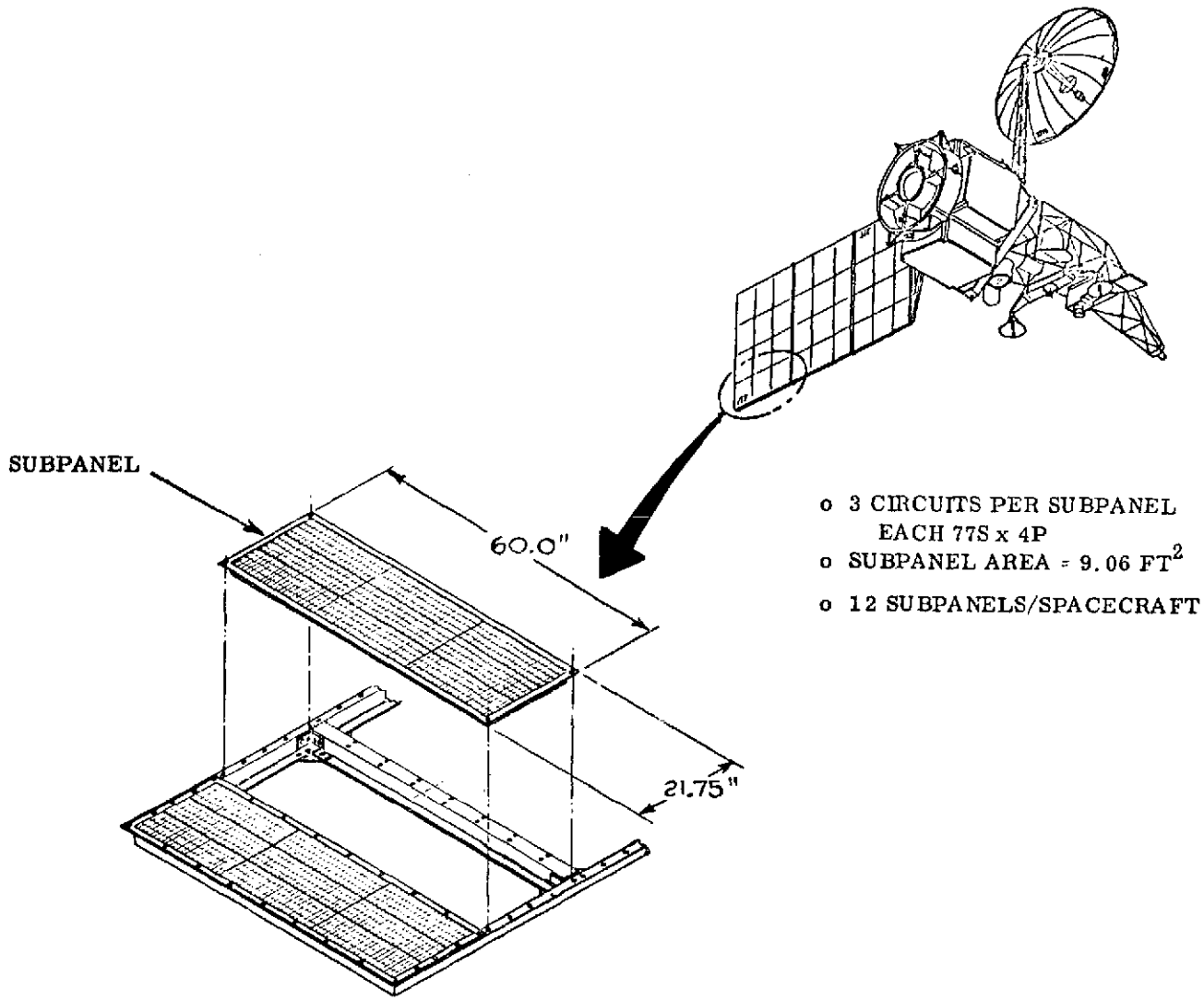

Figure 3.2-45. Solar Array Subpanel

The solar cell specified for this application has a minimum lot average performance of 250 ma at 0.480 volts for the covered cell at 28°C. The total solar array I-V characteristic given in Figure 3.2-46 was calculated based on the assumption that the solar array consists entirely of cells with minimum lot average performance. This basic single cell characteristic is modified by a set of time-independent design factors and a set of time-dependent environmental loss factors which are discussed in Section 3.2.7.3. Using these factors the resulting total solar array I-V characteristics at Beginning of Mission

Table 3.2-18. Summary of Solar Array Design Characteristics

Design Parameter		Value
Solar Cell Characteristics		
	Cell Type	N/P silicon
	Size	20x40 mm
	Thickness	250 μm
	Base Resistivity	2 ohm-cm
	AR Coating	Ta_2O_5
	Min Average Performance	250 ma @0.480v@28°C
Coverglass Characteristics		
	Material	Fused Silica or PPE ceria stabilized
	Thickness	152 μm
	Cut-on wavelength	350 nm
Cell Interconnector Characteristics		
	Base Material	Kovar
	Plating	Silver
Solar Cell Circuit Configuration		
	Series cells	77
	Parallel cells	4
Number of Circuits per Subpanel		3
Number of Subpanels per Panel		4
Number of Panels per Array Assembly		3
Number of Circuits per Array Assembly		36
Number of Solar Cells per Array Assembly		11088
Solar Array Subpanel Size		
	Length	1524mm (60.00 in)
	Width	552.5mm (21.75 in)
Total Solar Array Panel Area per Spacecraft		$10.103m^2$ ($108.75\ ft^2$)

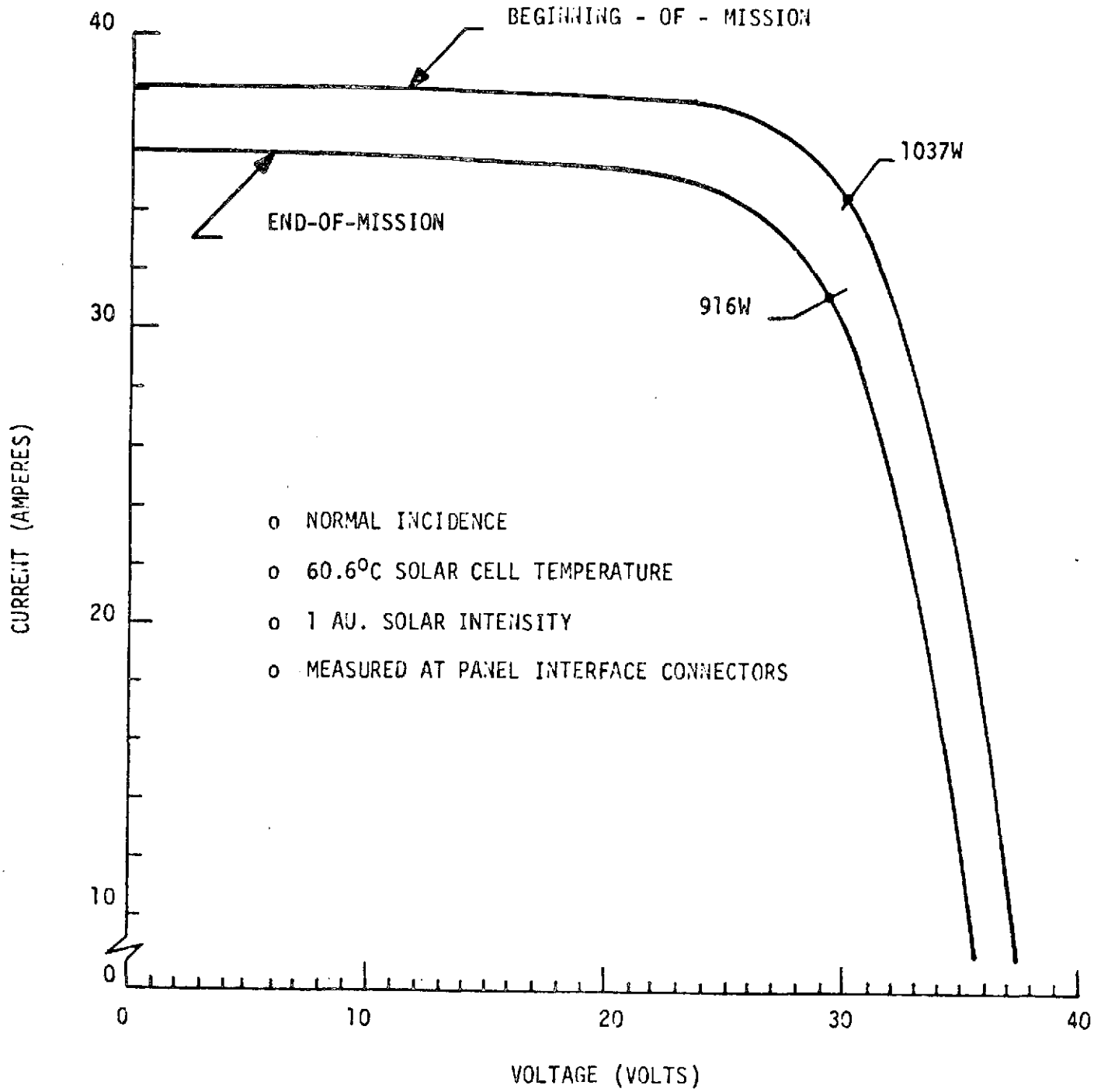

Figure 3.2-46
Solar Array I-V Characteristic at Beginning and End of Mission

(BOM) and End of Mission (EOM) are as shown in Figure 3.2-46 at the calculated maximum operating temperature in the 418 nm orbit. The resulting array maximum power output is 1037 watts at BOM and 916 watts at EOM.

The solar array assembly detailed weight breakdown is given in Table 3.2-19. A total weight of 37.6 kg (82.9 lbs) is calculated for the assembly which includes the deployment/retraction mechanism and yoke structure which attaches the array to the drive and power transfer assembly. The resulting array power-to-weight ratio is 27.6 watts/kg at BOM and 24.4 watt/kg at EOM.

Shunt Dissipator Panel

The shunt dissipator panel houses the individual shunt dissipative elements along with the sequencing control diode, as well as the quad redundant drive circuits. There are a total of 30 shunt elements required for the basic spacecraft solar array design. The remaining six solar cell circuits do not require shunting because of the current shunted by the driver

Table 3.2-19. Solar Array Assembly Weight Breakdown

Item	Weight (kg)
Solar cells	5.433
Coverglass	2.884
Cell-to-substrate adhesive	1.576
Coverglass Adhesive	0.221
Interconnectors & Solder	0.942
Subpanel wiring	0.750
Connectors	0.180
Diodes & terminal boards	0.150
Wire tacks & potting	0.154
Thermal control paint	1.185
Subpanel dielectric	0.756
Subpanel substrate	9.300
Panel frame structure	4.536
Subpanel-to-frame hardware	0.454
Panel hinge hardware	2.268
Deployment/Retraction Mechanism	5.443
Yoke Structure	1.361
TOTAL	37.6 kg (82.9 lb)

C-4

circuitry at the main bus voltage level. Figure 3.2-47 shows a functional schematic of the shunt dissipator panel.

3.2.7.3 Solar Array Electrical Performance

The electrical performance of the baseline solar array design for EOS-A was analyzed under postulated worst case design conditions for use in subsequent analysis of the power subsystem capability in terms of meeting load demands throughout the mission duration.

The resulting solar array I-V characteristics are given in Figure 3.2-46 for both the BOM condition and the EOM condition, where BOM is defined as the first few revolutions in the operational orbit and EOM is defined as the predicted condition after two years in the operational orbit.

The prediction of solar array performance is based on the specified minimum lot average solar cell performance as specified in Table 3.2-18. For purposes of predicting worst case performance, the solar array is considered to be constructed entirely of minimum lot average solar cells. This basic single cell characteristic is modified by a set of time-independent design factors and a set of time-dependent environmental loss factors. In addition, the solar cell temperature, angle-of-incidence and earth-sun distance must be accounted for in the analysis. The worst case solar array design factors are given in Table 3.2-20.

Table 3.2-20. Worst Case Solar Array Design Factors

Design Factor	Parameter Affected	Value
1. I_{sc} Prediction and Current Measurement Uncertainty	I_{sc}	0.970
2. Voltage Measurement and Test Temperature Uncertainty	V_{oc}	0.99
3. Series Resistance of Interconnects and Panel Wiring	R_s (series resistance per cell)	0.039 Ω

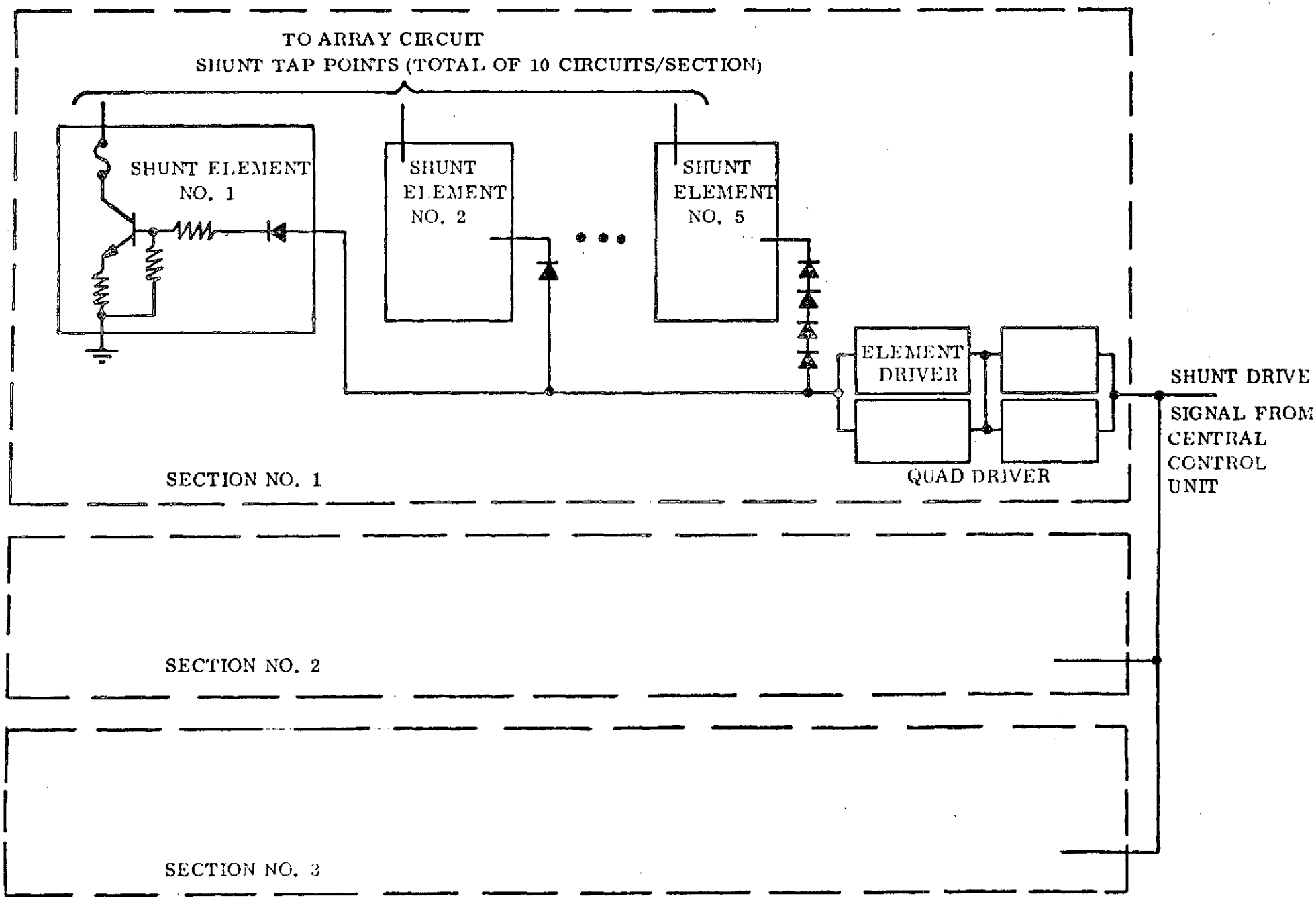

Figure 3.2-47. Functional Schematic of Shunt Dissipator Panel

A possible three percent loss has been assigned for short-circuit current (I_{sc}) prediction and current measurement uncertainty. This factor accounts for the uncertainty in the array short-circuit current due to possible standard cell calibration error, illumination test set-up error, and current measurement error.

An additional one percent loss has been applied to the array open-circuit voltage (V_{oc}) to account for possible instrumentation error associated with the measurement of solar array voltage or error in panel test temperature.

An equivalent series resistance of 0.039 ohms per cell has been allowed to account for the combined effects of the series resistance of interconnectors and panel wiring.

The solar array electrical output is affected by the on-orbit environment which includes trapped electron and proton radiation, solar flare proton radiation, untraviolet radiation and temperature cycling. The solar array end-of-mission (EOM) loss factors associated with these environments are summarized in Table 3.2-21. The effects of the particle radiation environment on the solar cells was calculated based on the omnidirectional integral particle spectra for trapped electrons and protons and solar flare protons as given in Figures 3.2-40 thru 3.2-42.

Table 3.2-21. Solar Array E.O.M. Environmental Loss Factors

Degradation Source	Parameter Affected	Value Remaining After 2 Years
1. Darkening of Coverglass/Adhesive	I_{sc}	0.98
2. Thermal Cycling Damage	I_{sc}	0.99
3. Solar Cell Radiation Damage	I_{sc}	0.973
	V_{oc}	0.960
	V_{max}	0.978
	P_{max}	0.883

These natural particle radiation environments were translated into a solar cell damage equivalent 1-MeV electron fluence using the methods given in reference 4. Figure 3.2-48 gives this damage equivalent 1-MeV electron fluence as a function of the shield thickness expressed in gm/cm^2. The solar cell shielding calculations, shown in Table 3.2-22, yield a total front shield of 0.038 gm/cm^2 and a total back shield of 0.11 gm/cm^2. The total damage equivalent 1-MeV electron fluence is calculated by entering Figure 3.2-48 with the front shield, assuming infinite back shielding and then with the back shield assuming infinite front shielding. The two values thus obtained are summed to yield the total damage equivalent 1-MeV electron fluence as shown in Table 3.2-23.

Note that two values of total damage equivalent 1-MeV electron fluence must be established to relate to degradation of the solar cell I-V characteristic. One value relates to the degradation of cell short-circuit current (I_{sc}). The second value relates to open-circuit voltage (V_{oc}), maximum power voltage (V_{max}), and maximum power (P_{max}). The resulting fraction remaining values are given in Table 3.2-21 for the specified solar cell (viz., 2 ohm-cm base resistivity and 250 m nominal thickness) based on the degradation curves given in Reference 4.

A darkening of coverglass/adhesive loss factor of 2 percent had been allowed for the combined effects of ionization darkening of the coverglass material and ultraviolet degradation of the coverglass adhesive. A one percent allowance has been made for possible thermal cycling induced degradation over the 2 year mission design lifetime.

In addition to these design factors and environmental loss factors, the solar array output is influenced by time-of-year with associated solar intensity, angle of incidence and solar cell temperature. Figure 3.2-49 shows the calculated solar cell temperature history for the selected 418 nm altitude orbit.

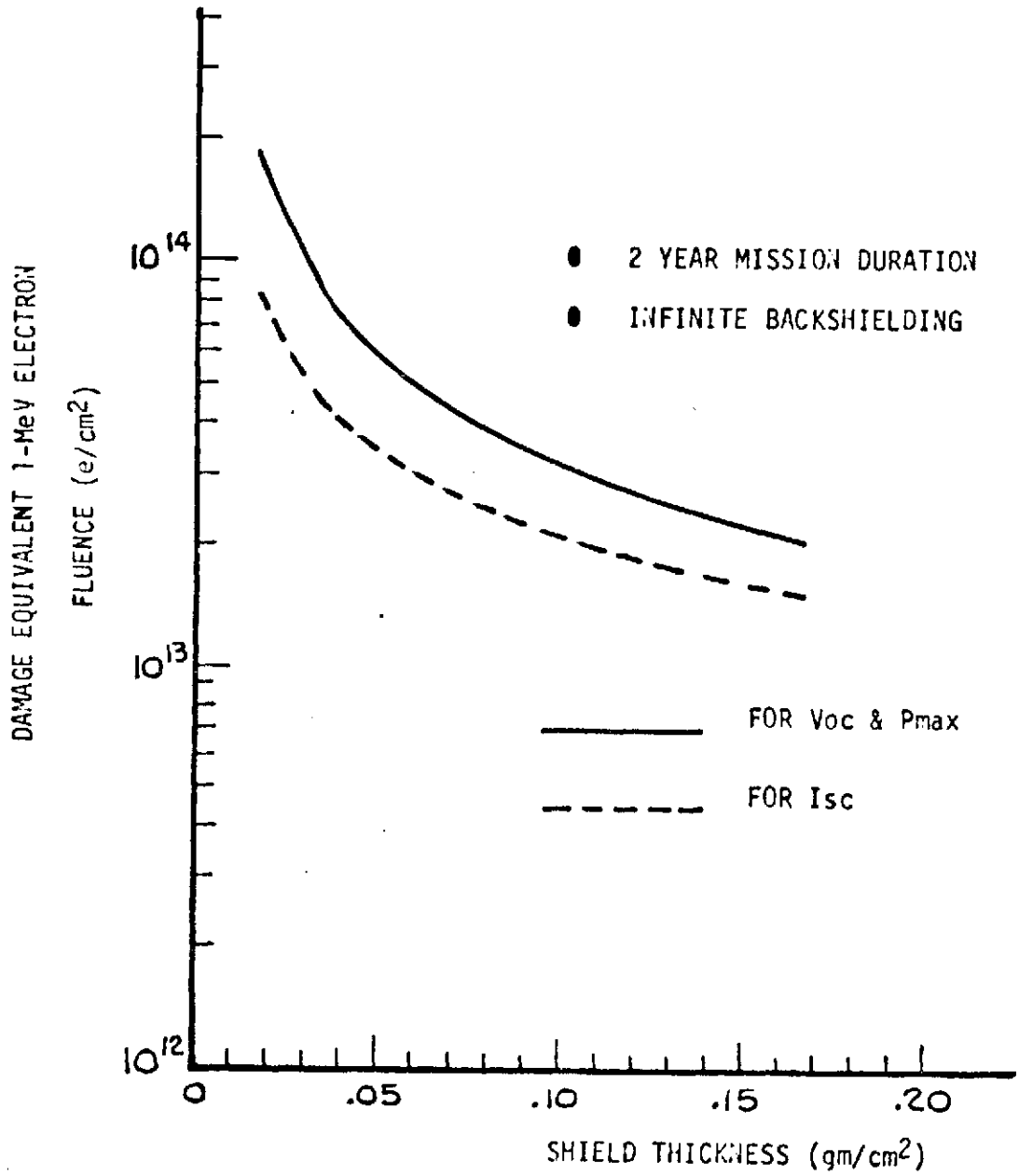

Figure 3.2-48. Damage Equivalent 1-MEV Electron Fluence vs. Shield Thickness for a Sun-Synchronous 775 Km (418 n. mi.) Altitude Orbit

Table 3.2-22. Solar Cell Shielding Calculations

(a) Front

MATERIAL	DENSITY (gm/cm^3)	THICKNESS	
		(μm)	(gm/cm^2)
Fused silica coverglass	2.202	152	0.034
Coverglass Adhesive	1.05	37	0.004

TOTAL FRONT SHIELD = 0.038 gm/cm^2

(b) Back

MATERIAL	DENSITY (gm/cm^3)	THICKNESS	
		(μm)	(gm/cm^2)
Cell-to-Dielectric adhesive	1.42	50	0.007
Dielectric	1.57	50	0.008
Honeycomb facesheet (front)	2.77	100	0.028
Honeycomb core (assumed 50% effective)	0.0256	19000	0.024
Honeycomb facesheet (rear)	2.77	100	0.028
Thermal control paint			0.012

TOTAL BACK SHIELD = 0.11 gm/cm^2

Table 3.2-23
Calculation of Total Damage Equivalent 1-MeV Electron Fluence

	Damage Equivalent 1-MeV Electron Fluence (e/cm^2)	
	For I_{sc}	For V_{oc} & P_{max}
Front	4.1E13	7.5E13
Back	2.0E13	2.9E13
Total	6.1E13	1.04E14

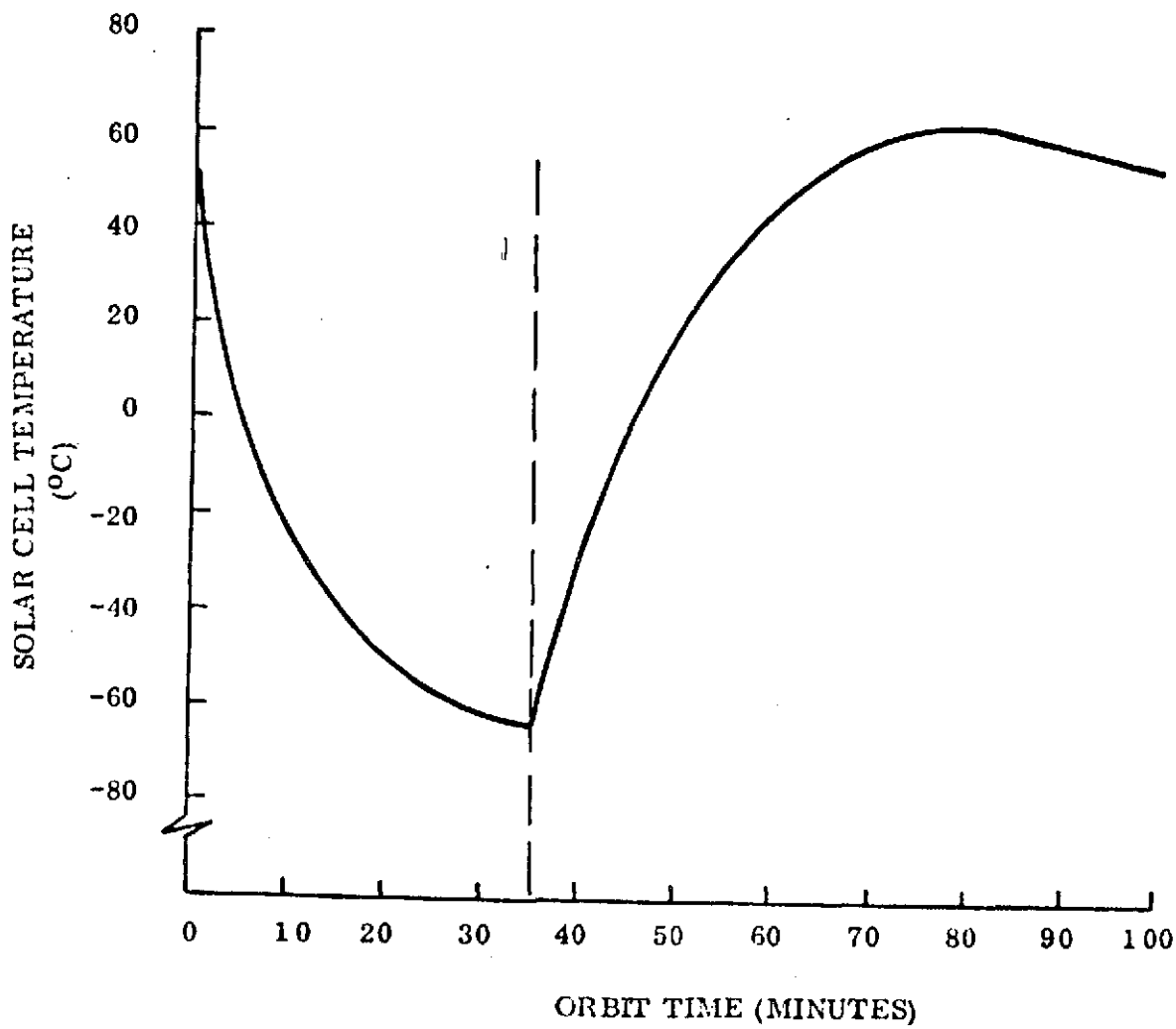

Figure 3.2-49
Solar Cell Temperature Profile in a 418 nm Altitude High-Noon Orbit

References

1. Stassinopoulos, E. G., "Orbital Radiation Exposure of the Astronomical Netherlands Satellite (ANS)", NASA-GSFC Document No. X-601-71-485, November 1971.
2. Stassinopoulos, E. G., "ERTS/Nimbus Radiation Environment Information", NASA-GSFC Document No. X-601-73-122, April 1973.
3. King, J. H., "Solar Proton Fluences As Observed During 1966-1972 and as Predicted for 1977-1983 Space Missions", NASA-GSFC Document No. X-601-73-324, October 1973.
4. Carter, J. R., Jr. and Tada, H. Y., "Solar Cell Radiation Handbook", TRW Report No. 21945-6001-RU-00, 28 June 1973.

3.2.8 C&DH MODULE (MISSION PECULIAR)

A basic description of the C&DH Module is given in Paragraph 3.1.6. The module is capable of supporting the EOS-A mission without modification and will contain all components described in Paragraph 3.1.6, including the TDRSS transponder and the narrowband tape recorder. This paragraph describes how the basic module is used to meet the requirements of EOS-A.

3.2.8.1 Modulation

EOS-A communicates with either STDN or TDRSS. Both links are bi-directional. The modulation schemes in each case are different, with TDRSS capability dependent on which antennas are used on each end. STDN uplink is for receipt of command and/or GRARR data. The data are received at S band through the omnidirectional antenna. Modulation is PSK/PM with the ranging data directly modulating the carrier and the command data PSK'ing a 70 kHz subcarrier. Figure 3.2-50 shows the uplink modulation spectrum.

The STDN downlink consists of 4 kbps realtime telemetry data PSK'd onto a 1250 kHz subcarrier linearly summed with the GRARR data or mediumband data (OBC memory dump at 128 kbps or NBTR playback data at 80 kbps) which directly phase modulate the carrier. DCS data may be transmitted simultaneously and is frequency translated to a ±250 kHz band about 2.25 MHz. Figure 3.2-51 shows the modulation spectrum for these data.

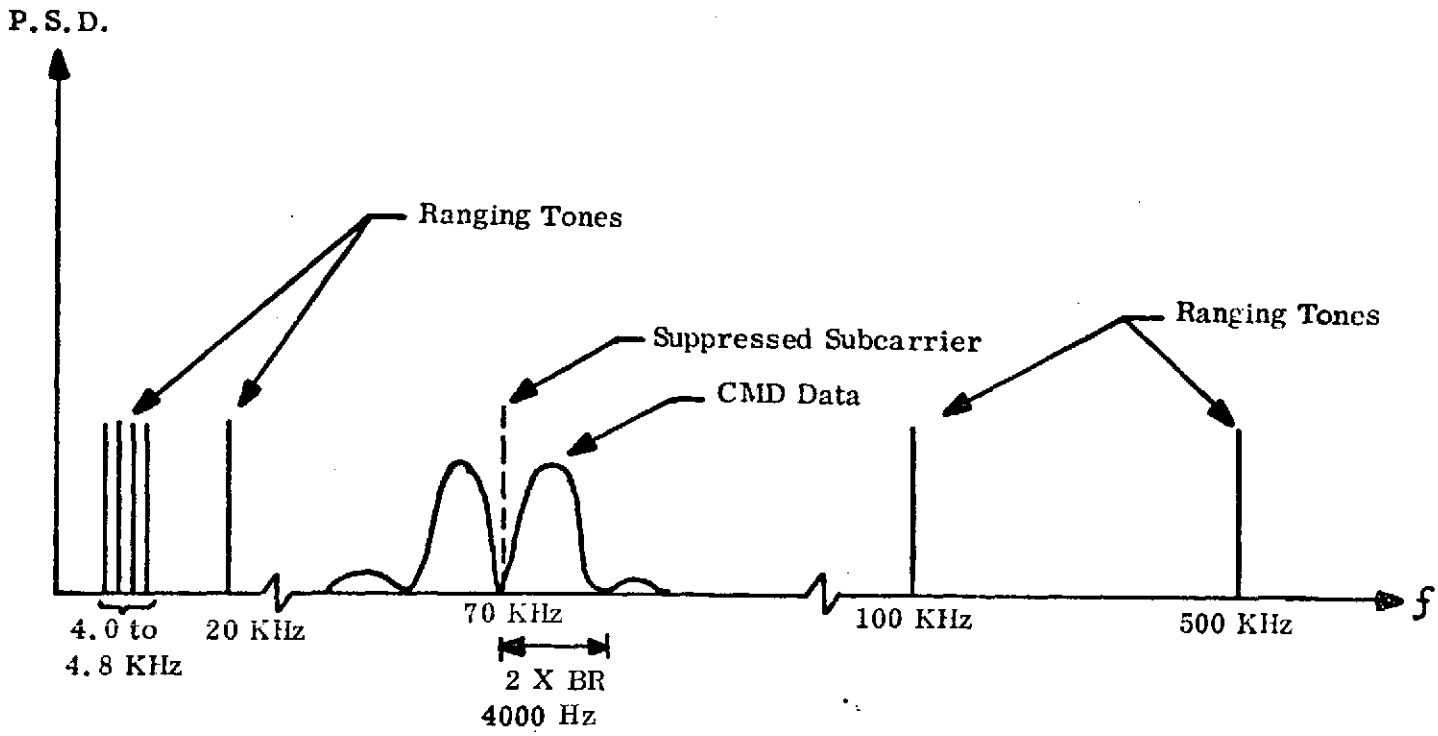

Figure 3.2-50. STDN Uplink

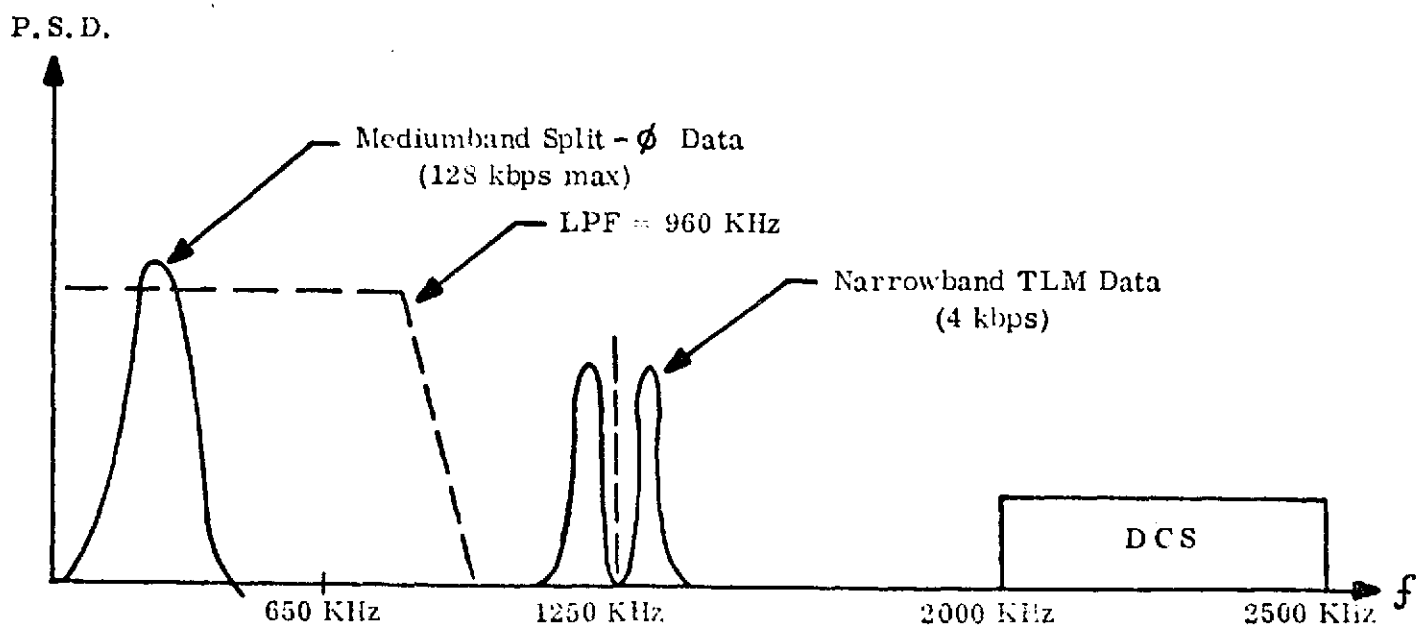

Figure 3.2-51. STDN Downlink

The TDRSS forward link contains data PSK modulated onto an S-band carrier. The data include command data modulo-2 added to identification detection code, and modulo-2 added to a pseudo-random noise (PN) code. The PN code provides a spread spectrum to meet IRAC power density requirements. It also is used for ranging. Command rate from the TDRSS multiple access (MA) system to the EOS omnidirectional antenna is limited to 100 bps. Command data rates of 1000 bps can be obtained using the TDRSS single access (SA) antenna to the EOS omni or the TDRSS MA (or SA) to the EOS 8-foot dish. Ranging data can be handled through any of the links.

The TDRSS return link consists of a unique PN code generated in the C&DH TDRSS transponder half-added to convolutionally encoded realtime telemetry data. The digital wavetrain PSK modulates the return link carrier at S-band. The return link uses the eight foot dish only and may also be used to transmit mediumband data (OBM memory dump at 128 kbps, or NBTR playback at 80 kbps) in lieu of the ranging and realtime telemetry data.

A separate link capability exists for receiving DCS platform data through a turnstile antenna mounted on the C&DH module. These data modulate a UHF carrier and directly feed the DCS receiver.

3.2.8.2 Link Performance

3.2.8.2.1 STDN Uplink Received Power

Item	Value
1. Transmit power (10 KW)	+40 dBW
2. Transmit circuit losses	0.0 dB
3. Transmit antenna gain	+43.0 dB
4. Transmit antenna pointing loss	0.0 dB
5. Space loss (0° elevation)	-169.18 dB
6. Atmospheric attenuation	-0.7 dB
7. Polarization loss	0.0 dB

Item	Value
8. Receive antenna gain (worst case)	-6.0 dB
9. Receive antenna pointing loss	0.0 dB
10. Receive circuit loss	-1.5 dB
11. Total received power	-94.38 dBW

3.2.8.2.2 STDN Uplink Carrier Margin Calculation (Acquisition)

Item	Value
1. Total received power	-94.38 dBW
2. Modulation loss	0.0 dB
3. Available carrier power	-94.38 dBW
4. Required carrier power	-139.0 dBW
5. Carrier Margin	44.62 dB

3.2.8.2.3 STDN Uplink Command Channel Margin Calculations Without Ranging

Item	Value
1. Total received power	-94.38 dBW
2. Modulation loss (θ_c radius) = $2J_1^2$ (θ_c) = $-ML_c$	$-ML_c$ dB
3. Available command channel power (P_s)	-94.38 $-ML_c$ dBW
4. Receiver noise P.S.D (N_o)	-186.8 dBW/Hz
5. Available P_s/N_o	$-ML_c$ + 92.42 dB-Hz
6. Required P_s/N (ΔPSK BER=10^{-6})	11.1 dB
7. B=bit rate (2000BPS)	33 dB-Hz
8. Required $\frac{P_s}{N_o} = \frac{P_s}{N} + B$	44.1 dB-Hz
9. Command channel margin	+48.32 $-ML_c$ dB

Though the modulation index is to be determined it will certainly not be such as to make $-ML_c \leq -15$ dB. Therefore sufficient margin exists.

3.2.8.2.4 STDN Uplink Command With Ranging

All terms in the above link calculation for command without ranging are repeated with ranging except that $ML_c = 2J_1^2(\theta_c)$ becomes $ML_{cR} = 2J_1^2(\theta_c)\,J_o^4(\theta_R)$.

3.2.8.2.5 STDN Uplink Ranging Margin Calculations Without Commands

	Item	Value
1.	Total received power	-94.38 dBW
2.	Modulation loss (each tone)	$-ML_R$
3.	Available ranging power per tone (P_s)	$-ML_R$ -94.38 dBW
4.	Receiver noise P.S.D. (N_o)	-186.8 dBW/Hz
5.	Available (P_s/N_o)	$-ML_R$ +92.42 dB-Hz
6.	Required P_s/N_o (assume 0.1 Hz PLL BW)	28.5 dB-Hz
7.	Ranging margin	$-ML_R$ + 63.92 dB

3.2.8.2.6 STDN Downlink Received Power

	Item	Value
1.	Transmitter power (2w)	+3 dBW
2.	Transmit circuit loss	-1.5 dB
3.	Transmit antenna gain	$-6\ dB_I$
4.	Transmit pointing loss	0.0 dB
5.	Space loss (0° elevation)	-169.84 dB
6.	Atmospheric Attn.	-0.7 dB
7.	Polarization loss	0.0 dB
8.	Receiver antenna gain (worst case)	+44.0 dB
9.	Receiver antenna pointing loss	0.0 dB
10.	Receiver circuit loss	0.0 dB
11.	Total received power	$-131.04\ dB_W$

3.2.8.2.7 STDN Downlink Carrier Tracking

Item	Value
1. Total Received power (assume 2 watts)	-131.04 dB_W
2. Modulation loss: $COS^2\ \Theta_1\ J_o^2\ (\Theta_2)\ J_o^2\ (\Theta_3) = ML$ 3 modulation sources Tape recorder P/B: mod index = Θ_1 NB TLM: mod index = Θ_2 DCS: mod index = Θ_3	-ML dB
3. Available carrier power (P_S)	(-131.04 -ML) dB_W
4. Noise P.S.D. (N_O)	-207.63 dB_W/Hz
5. Available P_S/N_O	(-ML + 76.59) dB-Hz
6. Required P_S/N_O (in 10 Hz tracking loop)	65 dB-Hz
7. Allotment to margin	-3.0 dB
8. Maximum allowable carrier depression (ML)	-8.59 dB

The carrier depression of -8.6 dB is a reasonable value. It appears that the 2 watt transmitter output is thus a reasonable value. Final output power selection cannot be made until after all downlinks are analyzed.

3.2.8.2.8 STDN Downlink Ranging (Two Tone Case)

Item	Value
1. Total received power (assume 2 watts)	-131.04 dB_W
2. Modulation loss = $J_o^2\ (\Theta_2)\ J_o^2\ (\Theta_3)\ J_o^2\ (\Theta_4) = J_1^2\ (\Theta_5)$ N/B TLM: mod index = Θ_2 DCS: mod index = Θ_3 Major tone: mod index = Θ_4 Minor tone: mod index = Θ_5 (Let $\Theta_4 = \Theta_5 \triangleq \Theta_R$)	$-ML_R$ dB
3. Available ranging power (P_S)	($-ML_R$ -131.04) dB_W
4. Noise P.S.D. (N_O)	-207.63 dB_W/Hz

Item	Value
5. Available (P_s/N_o)	$(-ML_R + 76.59)$ dB-Hz
6. Required (P_s/N_o) (In 0.1 Hz bandwidth)	28.5 dB-Hz
7. Allotment for margin	-3.0 dB
8. Maximum allowable carrier depression (ML_R)	-45.09 dB

3.2.8.2.9 TDN Downlink Narrowband Telemetry

Item	Value
1. Total received power	$-131.04\ dB_W$
2. Modulation loss: $COS^2\ \Theta_1\ J_o^2\ (\Theta_3)\ 2J_1^2\ (\Theta_2)$ N/B TLM: mod index = Θ_2 DCS: mod index = Θ_3 Recorder play back: mod index = Θ_1	$-ML_D$
3. Available data power (P_s)	$(-ML_D - 131.04)\ dB_W$
4. Noise P.S.D. (N_o)	$-207.63\ dB_W/Hz$
5. Available (P_s/N_o)	$(-ML_D + 76.59)$ dB-Hz
6. Required E_o/N_o (ΔPSK at BER = 10^{-5})	9.9 dB 9.9 dB
7. Bit rate B = 32 KBPS	45.05 dB-BPS
8. Required $\frac{P_s}{N_o} = \frac{E_b}{N_o} + B$	54.95 dB-Hz
9. Allotment for margin	-3.0 dB
10. Max allowable N/B TLM data suppression (ML_D)	-18.64 dB

18.64 dB is more suppression of the narrowband telemetry than will be used. The value to be used will be based upon:

a. optimizing Θ_1 , Θ_2 .... Θ_5 for power per channel and vs. that required.

b. modification of the mod indices to avoid intermodulation products.

3.2.8.2.10 STDN Downlink Medium Rate Channel (Digital Data)

Item	Value
1. Total power received	$-131.04\ dB_W$
2. Modulation loss: $SIN^2\Theta_1\ J_o^2\ (\Theta_2)\ J_o^2\ (\Theta_3)$ Med. rate channel mod index = Θ_1 N/B TLM mod index = Θ_2 DCS mod index = Θ_3	$-ML_{MR}$
3. Available data power (P_s)	$(-ML_{MR} - 131.04)\ dB_W$
4. Noise PSD (N_o)	$-207.63\ dB_W/Hz$
5. Available P_s/N_o	$(-ML_{MR} + 76.59)$ dB-Hz
6. Required E_b/N_o (Δ PSK at BER = 10^{-5})	9.9 dB
7. Bit rate (640 KBPS)	58.06 dB-BPS
8. Required $\frac{P_s}{N_o} = \frac{E_b}{N_o} + B$	67.96 dB-Hz
9. Allotment for margin	-3.0 dB
10. Maximum allowable med. rate (digital data) suppression ML_R	-5.63 dB

5.6 dB suppression is reasonable but small enough that the subcarrier modulation may be usable. Direct carrier modulation has been assumed in this link calculation.

3.2.8.2.11 DCS - STDN Downlink Calculations

Item	Value
1. Total received power	$-131.04\ dB_W$
2. Modulation loss: $2\ J_1^2\ (\Theta_3)\ COS^2\ \Theta_1\ J_o^2\ (\Theta_2)$ Med rate M.I. = Θ_1 N/B TLM M.I. = Θ_2 DCS M.I. = Θ_3	$-ML_{DCS}$ dB
3. Available DCS power (P_s)	$(-ML_{DCS} - 131.04)\ dB_W$
4. Noise PSD (N_o)	$-207.63\ dB_W/Hz$
5. Available P_s/N_o (for 500 KHz bandwidth)	$(-ML_{DCS} + 76.59)$ dBHz

Item	Value
6. Available P_S/N_O (per 50 KHz channel)	$(-ML_{DCS} + 66.59)$ dBHz
7. Required downlink P_S/N_O per channel	59.4 dBHz
8. Allotment for margin	-3.0 dB
9. Allowable DCS suppression (ML_{DCS})	-4.19 dB

Note that the assumption has been implicitly made that no allowance is needed to compensate for an individual DCS channel being suppressed by EOS receiver saturation caused by one or more strong signals. Actually this would only be literally true if each of the 10 channels had separate AGC's so that the portion of the downlink subcarrier energy allotted to each channel were constant and independent of uplink received signal strength. Such an approach might be required because the DCS channel maximum depression of -4.19 means it has at least 38% of the total transmitted power even with this implicit assumption. It is not now reasonable to assume a larger power allotment at this time.

Note that this calculation assumes the DCP to EOS elevation angle is limited to values greater than 25°. At 5° elevation the uplink is weakened by 4.35 dB. The overall performance would then never achieve the required minimum of 56.5 dBHz. Thus it must be concluded this DCS link is limited to platform elevations greater than 25° and by the non-saturation assumption of the above paragraph.

3.2.8.2.12 TDRS Forward Link Using Multiple Access Beam (S-Band)

Item	Value
1. TDRS transmit power (19.5w)	+12.9 dB_W
2. TDRS transmit losses	-1.0 dB
3. TDRS transmit antenna gain (10 elements)	+25.0 dB
4. Pointing loss	-1.0 dB
5. EORP	+35.9 dB_W
6. Space loss	-192.0 dB

Item	Value	
7. EOS antenna gain ("omni-directive" antenna) (8 ft. dish)	-6 dB	+32 dB
8. EOS received power	-162.1 dB_W	-124.1 dBW
9. Transponder loss	-2.0 dB	-2.0 dB
10. Demodulator loss	-1.5 dB	-1.5 dB
11. PN loss	-1.0 dB	-1.0 dB
12. Allotment for system margin	-3.0 dB	-3.0 dB
13. Available received power (P_S)	-169.6 dB_W	-131.6 dB_W
14. Noise power spectral density ($N_o = KT_S$) (for omni; T_S=558°K) (for 8 ft. dish; $T_S \leq 505°K$)	-201.13 dB_W/Hz	-201.56 dB_W/Hz
15. Available signal to noise P.S.D. (P_S/N_o)	+31.53 dB/Hz	69.96 dB/Hz
16. Required (E_b/N_o) (for ΔPSK at 10^{-5} BER)	9.9 dB	9.9 dB
17. Available bit rate = $\frac{P_S}{N_o} - \frac{E_b}{N_o}$	21.63 dB-PBS = 145 bps	60.06 dB-BPS = 10^6 bps

Conclusion: The "omni-directional" antennas are acceptable for command (and ranging) reception for bit rates up to approximately 150 bps.

3.2.8.2.13 TDRS Return Link Using Multiple Access Beam (S-Band)

Item	Value
1. EOS EIRP	EIRP dB_W
2. Space loss	-192.7 dB
3. Polarized loss	-1.0 dB*
4. TDRS antenna gain	+28 dB
5. TDRS received power	EIRP - 165.7 dB_W
6. Transponder loss	-2.0 dB
7. Demodulator loss	-1.5 dB

Item	Value	
8. PN loss	-1.0 dB	
9. AGIPA loss	-0.5 dB	
10. Allotment for system margin	-3.0 dB	
11. Available received power (P_s)	EIRP - 173.7 dB_W/H_z	
12. Noise P.S.D.: $N_o = KT_s$ $T_s = T_A + T$ interference $= 824 + 255 = 1079^oK$	-198.3 dB_W/Hz	
13. Available signal to noise P.S.D. (P_s/N_o)	EIRP +24.6 dB	
14. Required E_b/N_o (ΔPSK at 10^{-5} BER)	9.9 dB	
15. Available bit rate = $\frac{P_s}{N_o} - \frac{E_b}{N_o}$	EIRP +14.7 dB-BPS	
16. Code gain: Rate 1/2, constraint length 7 convolutional code	+5.2 dB	
17. Available bit rate (coded)	EIRP + 19.9 dB-BPS	
18. Required EOS bit (32 KBPS)	45.05 dB-BPS	
19. Required EIRP EOS transmit antenna gain	25.15 dB_W	
(for omni)	-6 dB	
(for 8 ft. dish)		+32.7 dB
Required EOS transmit power		
(for omni)	31.15 dB_W	
(for 8 ft. dish)		-7.55 dB_W

Item	Value		Source
RF transmit path loss	-2.0 dB		Estimate
Required power amplifier output			
(omni)	+33.15 dB_W		Calculated
(8 ft. dish)		-5.55 dB_W (278 mw)	Calculated

Clearly 33.15 dB_W = 2065 watts is unacceptable. If the bit rate through TDRS is limited to 1 KBPS (a possible alternative) than the required power amplifier output for the omni-directive antenna case drops to 2065/32 = 64 watts (still too high). At 100 bps — perhaps acceptable as a backup data rate — a 7 watt transmitter would be suitable.

Conclusion: The omni antenna is unacceptable for telemetry. Use of the 8 ft. dish requires only -5.55 dB_W = 0.278 watt = 278 mw is quite reasonable. The output could be raised to 1 watt to account for poorer open-loop pointing of the dish. For example, at 1 watt the beam pointing loss permitted = 5.55 dB which is beyond the 3 dB point.

3.2.8.3 Command and Telemetry

EOS-A requires the use of eleven remote decoder/muxes distributed as follows: C&DH (2), power (1), ACS (1), SCCM (2), wideband (2), thematic mapper (1), MSS (2). These remotes provide the only interface with the OBC and the ground for command control and collection of narrowband telemetry data. The telemetry data are formatted into a 128 x 64 (column/word) word major frame and transmitted to the ground at 4 kbps. This results in a major frame rate of 1/16.384 seconds. The telemetry data are also recorded on the NASA universal narrowband tape recorder which is capable of storing 10^9 bits or 40 orbits of data. Normal operation will play back the recorded data once every two orbits at a 20:1 playback ratio which will take about 10 minutes. Use of TDRSS increases the time available for each playback and will permit less frequent playback of data.

3.2.8.4 On Board Computer (OBC)

A standby central processor unit (CPU) is contained in the EOS-A configuration. This processor is activated by command if the primary CPU fails to complete a periodic self-check program. Software packages required for unique support of EOS-A are discussed in Section 3.2.9.

3.2.9 MISSION UNIQUE SOFTWARE

A number of software packages are unique to supporting the EOS-A mission requirements. These include programs which provide open loop pointing for the STDN (2) and TDRSS antennas, ancilliary data to the thematic mapper and MSS, and data conditioning in support of shuttle. The amount of processing time and memory needed for each of these functions is given in Table 3.2-24. Other standard functions such as thermal control, limit checking, and alarm indication are discussed in Paragraph 3.1.7.

Table 3.2-24. CPU and Memory Loading

	CPU (%)	Memory (K words)
Antenna Pointing	8.0	6.0
Payload	Negligible	2.0
Shuttle	Negligible	0.5
Total (EOS-A)	8.0	8.5

3.2.9.1 Antenna Pointing

The antenna pointing program controls the gimballed motion of three EOS-A antennas. Two of these antennas are open loop pointed at the STDN ground stations. (These two antennas may also point at LCU stations, but tracking requirements would be the same). The third antenna is pointed at the TDRS and requires open loop pointing information from the OBC when transmitting and/or receiving at S-Band or for initial acquisition of the monopulse carrier for transmission at Ku band.

The functional characteristics of the three antenna pointing programs are the same. In each case, the initial pointing position (pitch and roll angle) is loaded into the OBC along with time dependent view angle data based on the EOS-A spacecraft ephemeris. (The TDRSS program also requires similar data for the TDRSS spacecraft.) Initialization and termination commands are loaded from the ground as delayed commands. The OBC calculates the antenna gimbal command updates on the basis of stored algorithms and

outputs these via the supervisory data bus to remote decoder/muxes located in the wideband module. The STDN pointing requirement is in 1.5 degree increments over a 120 degree range in each axis. This requires a seven bit word for each axis. TDRSS pointing requirement is also in 1.5 degree increments, but must encompass a range of 240 degrees, requiring an eight bit word for each axis. Angle updates are output at a maximum rate of ten times per second.

3.2.9.2 Payload

Many of the payload support requirements are satisfied by the command and telemetry programs included with the basic spacecraft bus software (see Section 3.1.7). These include configuration command sequences (i.e., MOMS data formatting mode) and limit checking of critical instrument parameters. Other functions are unique to the EOS-A payload and will be handled in a separate software package.

The system design concept is to merge with the wideband instrument data all ancillary data required to radiometrically calibrate, geometrically correct and annotate the instrument data. Thus, ephemeris, attitude, attitude rate, alignment bias, and calibration update data are collected by the OBC and provided to the wideband module for insertion into the video data stream. Emphemeris data are periodically updated from the ground ($\sim$ once per orbit) and algorithmically updated for use by the ACS. The remainder of the data are also updated about once per orbit. The wideband module will insert these data into the video data stream during the scan mirror turn around interval.

3.2.9.3 Shuttle

Compatibility with shuttle requires a special software package. This program provides conditioning for command and telemetry data. This conditioning is required since the shuttle orbiter actively processes all data passing through it and, therefore, places restrictions on command encoding and data formatting.

Command data are received at 2000 bps, convolutionally encoded (3 to 1), and interleaved with 2 kbps synchronization and orbiter address overhead data. The incoming 8 kbps data

are decoded by the OBC and reinserted on the supervisory data bus for execution. This input is obtained via a DMA channel dedicated to shuttle servicing.

Telemetry data to the orbiter are collected at 4 kbps from the return data bus through the TFG. These data are formatted with synchronization data (format TBD) and transferred to the orbiter on a dedicated DMA channel.

Some caution and warning data are also collected from the return data bus for transfer to the orbiter. Number and rates of these data are TBD.

3.2.10 ELECTRICAL INTEGRATION (MISSION PECULIAR)

The electrical integration system associated with the basic spacecraft bus is discussed in Paragraph 3.1.8. This bus provides an interface panel on the transition frame which services the mission peculiar payload. In addition, the signal conditioning and control module (SCCM) provides circuitry for performing mission peculiar functions. This section defines the techniques used to mate the mission peculiar hardware associated with EOS-A with the interface panel and the SCCM. It also discusses the power and data requirements of the EOS-A spacecraft.

3.2.10.1 Functional Description

A block diagram of the EOS-A mission peculiar electrical system is given in Figure 3.2-52. This diagram shows the wideband module, SCCM, MSS, thematic mapper (TM) and gimbal drive assemblies (3). (The SCCM serves both the basic spacecraft bus and the mission peculiar hardware; only the mission peculiar functions are described here.)

The wideband module provides the basic control of all mission peculiar functions. It obtains digital data from a remote A/D in the TM and formats it along with timecode annotation and ancillary data for transmission to the ground or to TDRSS. Digital data (including timecode annotation) is also obtained from the MSS for transmission to the ground or TDRSS. The interface with each instrument consists of a shielded coax pair of 50 ohm cable. The wideband module provides four RF outputs. Two of these are fed to the 1.7

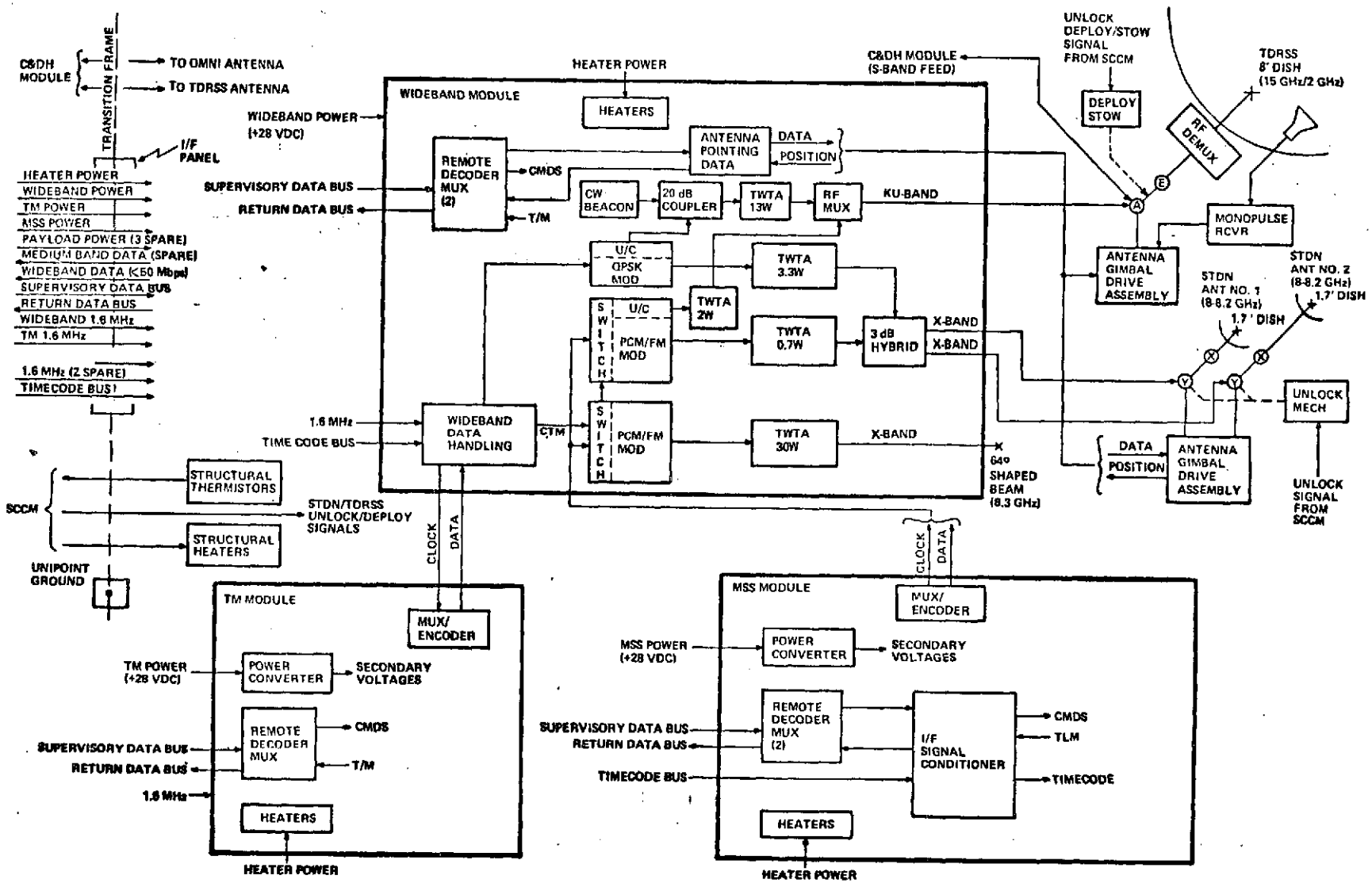

Figure 3.2-52. EOS-A Mission Peculiar Electrical System Block Diagram

foot dish STDN antennas via rotary joints in the gimbal assemblies. These outputs are at X-Band and contain independent spectral bands of TM and MSS data. The MSS data may be replaced with compacted TM data as an optional commandable mode. The third output directly feeds a $\pm 32^{\circ}$ shaped beam antenna for transmission to low cost ground stations. This link is also at X-band and can contain either MSS or compacted TM data (selectable by command). The fourth output is used to feed the eight foot dish TDRSS antenna via a dual frequency rotary joint in the gimbal assembly. This output is at Ku-Band and contains independent spectral bands of TM and MSS data and a TDRSS beacon carrier. The MSS data may be replaced with compated TM data as an optional commandable mode. The other half of the TDRSS rotary joint is used for a bidirectional S-Band link with the C&DH module in the basic spacecraft bus. The wideband module also provides the control and feedback signals for the servo loop which controls each of the gimbals. All three gimbals are capable of open loop pointing based on inputs obtained via the supervisory data bus from the OBC; however, the TDRSS gimbal automatically switches to monopulse control for Ku-band transmission. Inputs to the wideband module come from the transition interface panels and consist of +28 VDC regulated bus (two T2 cables); the supervisory and return data busses (redundant T2S cables which drive two remote decoder/muxes within the wideband module); 1.6 MHz clock (twin-ax); timecode (redundant T2S cable); and module heater power (T2 cable). The module provides two signal ground outputs and ten shield tie points (chassis) with the spacecraft grounding scheme described in Section 3.1.8. The thematic mapper module provides the digital data outputs to the wideband modules. It receives +28 VDC regulated bus (two T2 cables), the supervisory and return data busses (redundant T2S cables which drive a single remote decoder/mux within the instrument module), 1.6 MHz clock (twin-ax), and module heater power (T2 cable). All of these signals are obtained from the transition interface panel. The module also provides two signal ground outputs and ten shield tie points (chassis) consistent with the spacecraft grounding scheme described in Section 3.1.8. The MSS inputs and outputs are identical to TM except for the addition of timecode data (redundant T2S cable).

The SCCM includes circuitry which provides drive for the orbit transfer solenoids based on command inputs, deployment of the solar array, deployment of the TDRSS antenna,

unlatch for the STDN antennas, and shuttle interface. Orbit transfer control provides safing of the circuits such that more than one command is required to perform the function. The arming command activates a timer which disables the arming circuit after ten seconds. Fire commands are issued within the ten second period. All circuits are dedundant. Driver outputs consist of six pairs of double shielded T2S which control the orbit transfer engines in the propulsion module. Solar array deployment occurs in three steps: release, deploy, and extend. Capability for retract is also provided. Operating circuits are safed such that none of the functions occur prior to adapter clamshell separation. Outputs are seven redundant pairs of solenoid driver pulses on double shielded T2S which control the paddle unlatch and hinge pins, stepper motor drives on T2S for driving the deployment motor and extend/retract motor, and biasing signals on single conductor for telemetry monitors. STDN antenna release circuits are safed by multiple command and provide redundant solenoid driver outputs on double shielded T2S. TDRSS antenna deployment circuit is TBD but is similar to the solar array deployment circuit. The shuttle interface circuitry provides the capability to disable the spacecraft power bus from the solar array and provides input power from a solar array simulator in the shuttle for reconditioning of the batteries. It also provides direct caution and warning and command control of critical spacecraft circuits, along with safing of all spacecraft pyro circuits. Shuttle interface circuitry interfaces directly with the spacecraft umbilical connector.

Spacecraft harnessing and grounding criteria are the same as discussed for the basic spacecraft bus.

3.2.10.2 Power Load Profile

Table 3.2.25 and Figure 3.2-53 give the average orbital load profile for the EOS-A spacecraft. This profile is based on 3% realtime payload data via STDN, 6% realtime data via TDRSS, and 12% support of low cost ground stations.

Table 3.2-25. Power Load Profile (watts)

Subsystem	Basic Load	STDN (TM/MSS) + LCU (CTM)	TDRSS (TM/MSS) + LCU (CTM)	LCU (CTM)	Warmup/ Gimbal/Slew
ACS	37	37	37	37	37
C&DH	182	182	182	182	182
SCCM	74	74	74	74	74
Propulsion	39	39	39	39	39
WBCM	12	328	384	277	12
STDN Gimbal Assembly	0	60	0	0	100
TDRSS Gimbal Assembly	0	0	100	0	60
DCS	40	40	40	40	40
TM	10	110	110	110	110
MSS	0	65	65	65	0
TOTAL	394	935	1031	824	654

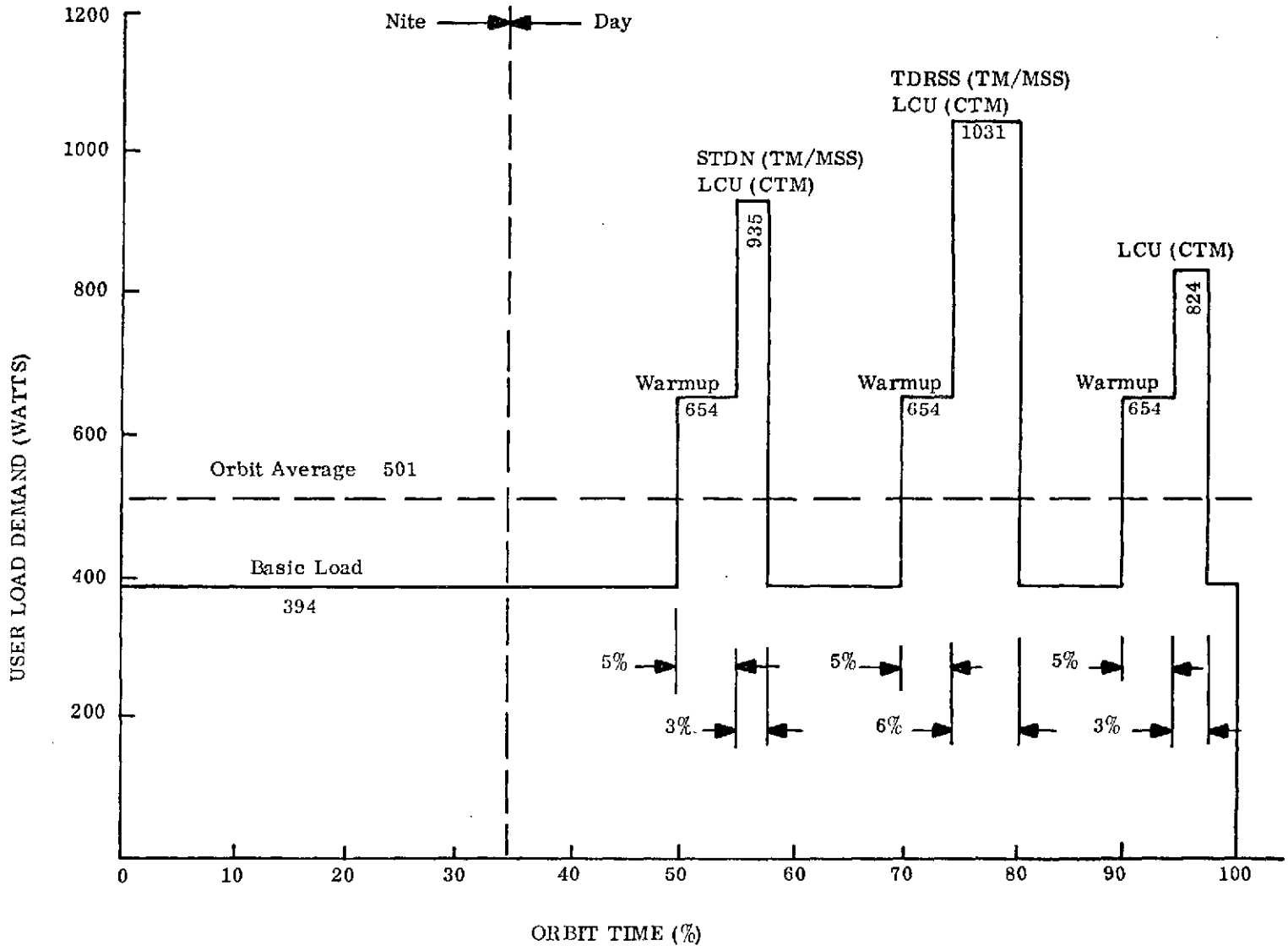

Figure 3.2-53. Power Load Profile

3.3 FOLLOW-ON MISSION CONFIGURATION

3.3.1 ALTERNATE MISSION CONFIGURATION

EOS configurations and arrangements have been developed for a wide variety of payloads. These modular configurations use the standard General Purpose Spacecraft Segment (GPSS) combined with Mission Peculiar Spacecraft Segments (MPSS) designed to accommodate each payload equipment compliment. The spacecraft for follow-on EOS missions are designed to interface with either the Delta or Titan launch vehicles using a conventional aft adapter and Vee-band separation joint. A central three point Transition Frame separating the Subsystem and Instrument Sections is provided for Shuttle launch or retrieval retention.

The alternate configurations shown are:

- Thematic Mapper plus dual MSS with TDRSS (Figure 3.3-1)
- Thematic Mapper plus HRPI with TDRSS - Retrieve Configuration (Figure 3.3-2)
- Thematic Mapper plus HRPI with TDRSS - Resupply Configuration (Figure 3.3-3)
- SAR plus Wideband - Delta 2910 Configuration (Figure 3.3-4)
- SAR plus TM plus Wideband - Delta 3910 Configuration (Figure 3.3-4)
- Seasat (Figure 3.3-5)
- Solar Maximum (Figure 3.3-5)
- SEOS - Shuttle/Tug launch (Figure 3.3-5)

Spacecraft and mission characteristics are summarized for each configuration including the spacecraft launch gross weight.

The Thematic Mapper plus HRPI combination has been used as a representative payload for Shuttle era applications and is shown in both Delta launch - Shuttle retrieve and Titan launch - Shuttle Resupply configurations. The SEOS configuration would be launched by Shuttle and use the Space Tug for final injection into its geosynchronous orbit and for retrieval for Shuttle refurbishment.

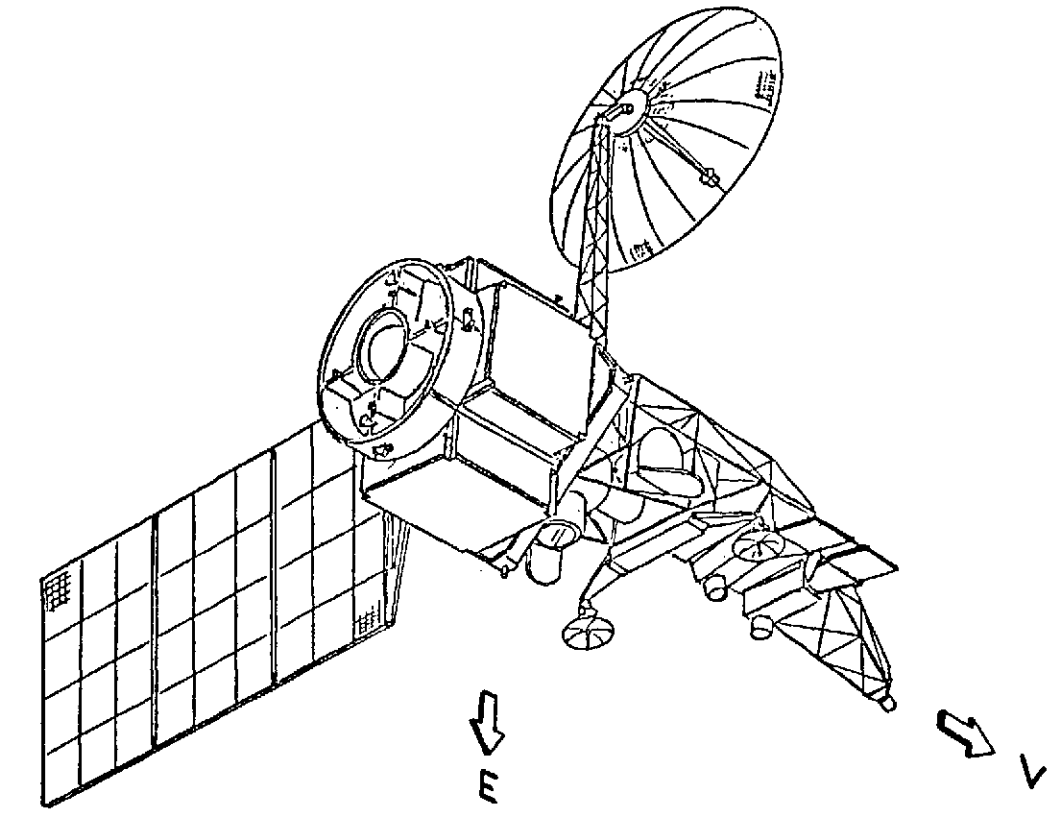

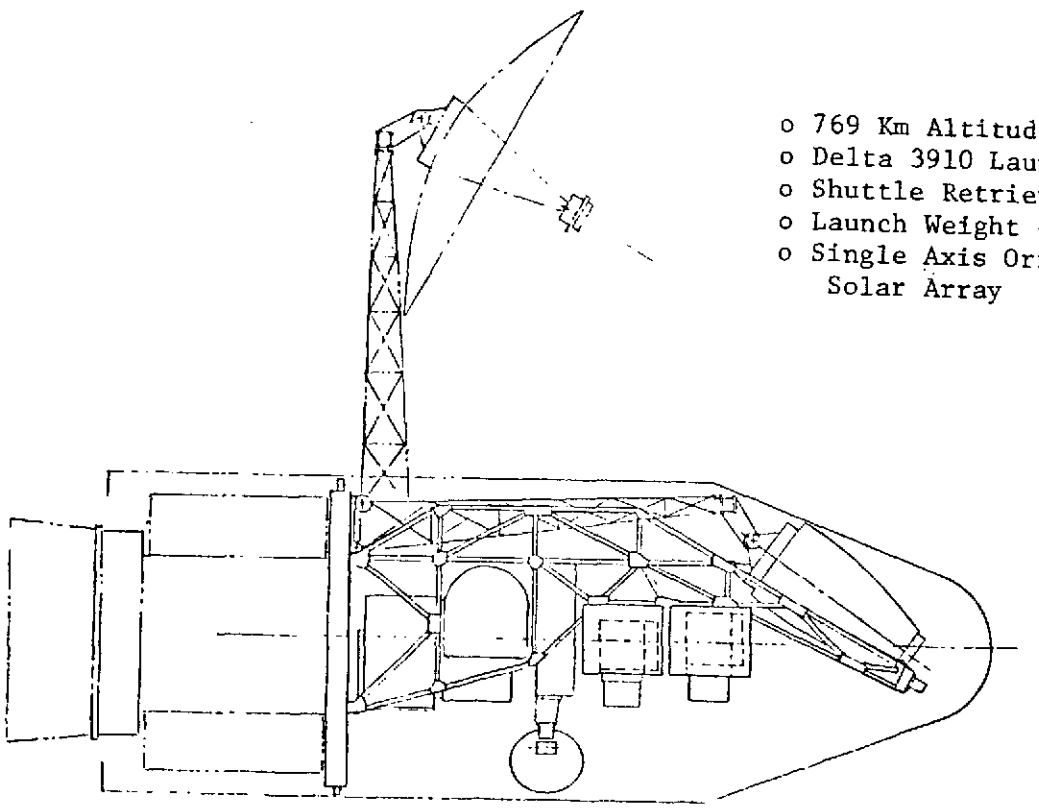

- o 769 Km Altitude
- o Delta 3910 Launch Vehicle
- o Shuttle Retrieve
- o Launch Weight - 2995 lbs
- o Single Axis Oriented Solar Array

Figure 3.3-1. TM + Dual MSS + TDRSS Configuration

- o 775 Km Altitude
- o Delta 3910 Launch
- o Shuttle Retrieve
- o Single Axis-Oriented Solar Array
- o LGW - 2995 LBS.

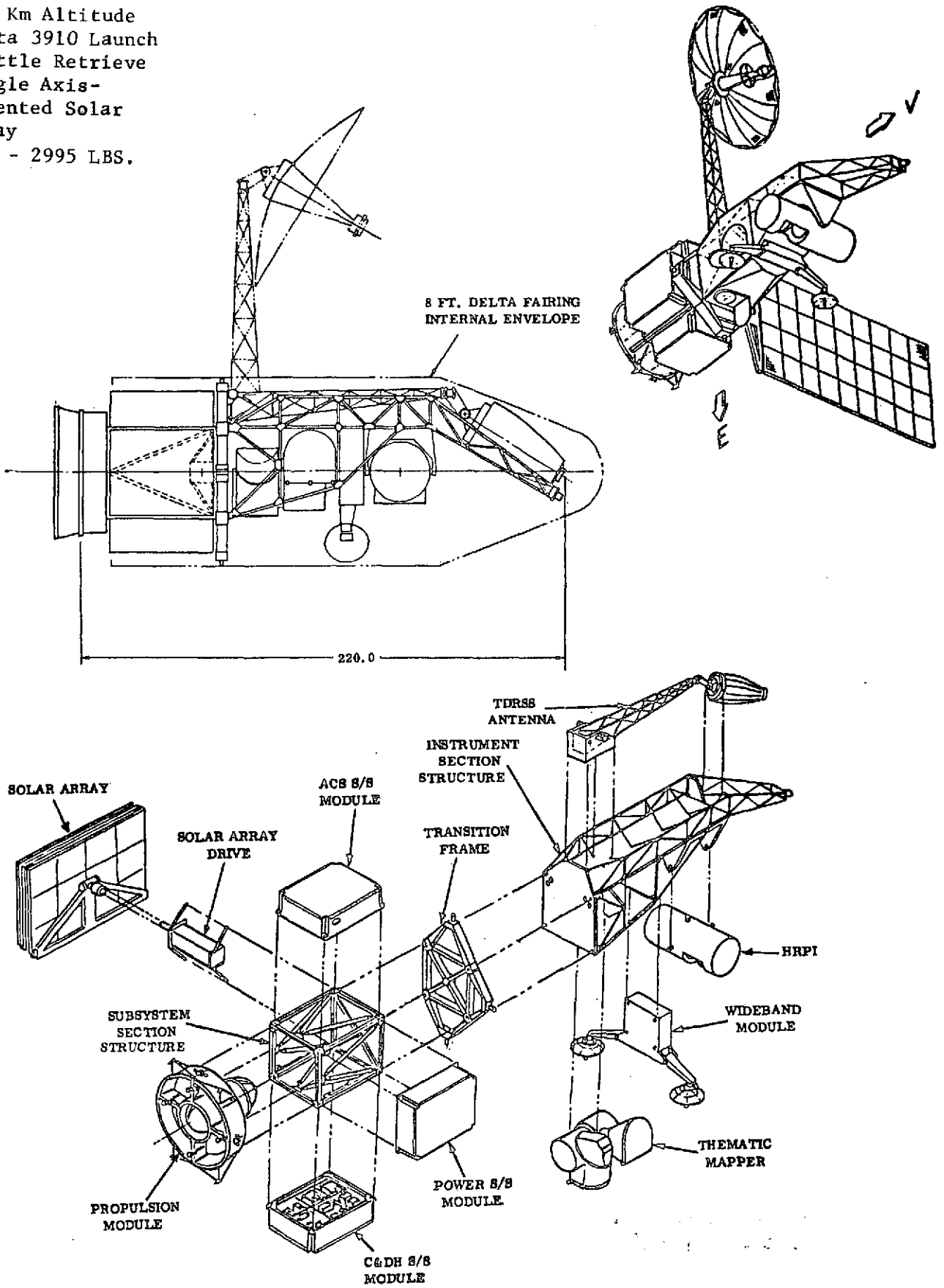

Figure 3.8-2. TM + HRPI Retrieve Configuration

- o 775 Km Altitude
- o Titan IIIB NUS Launch Vehicle
- o Shuttle Resupply
- o Launch Weight - 3500 lbs.
- o Single Axis - Oriented Solar Array

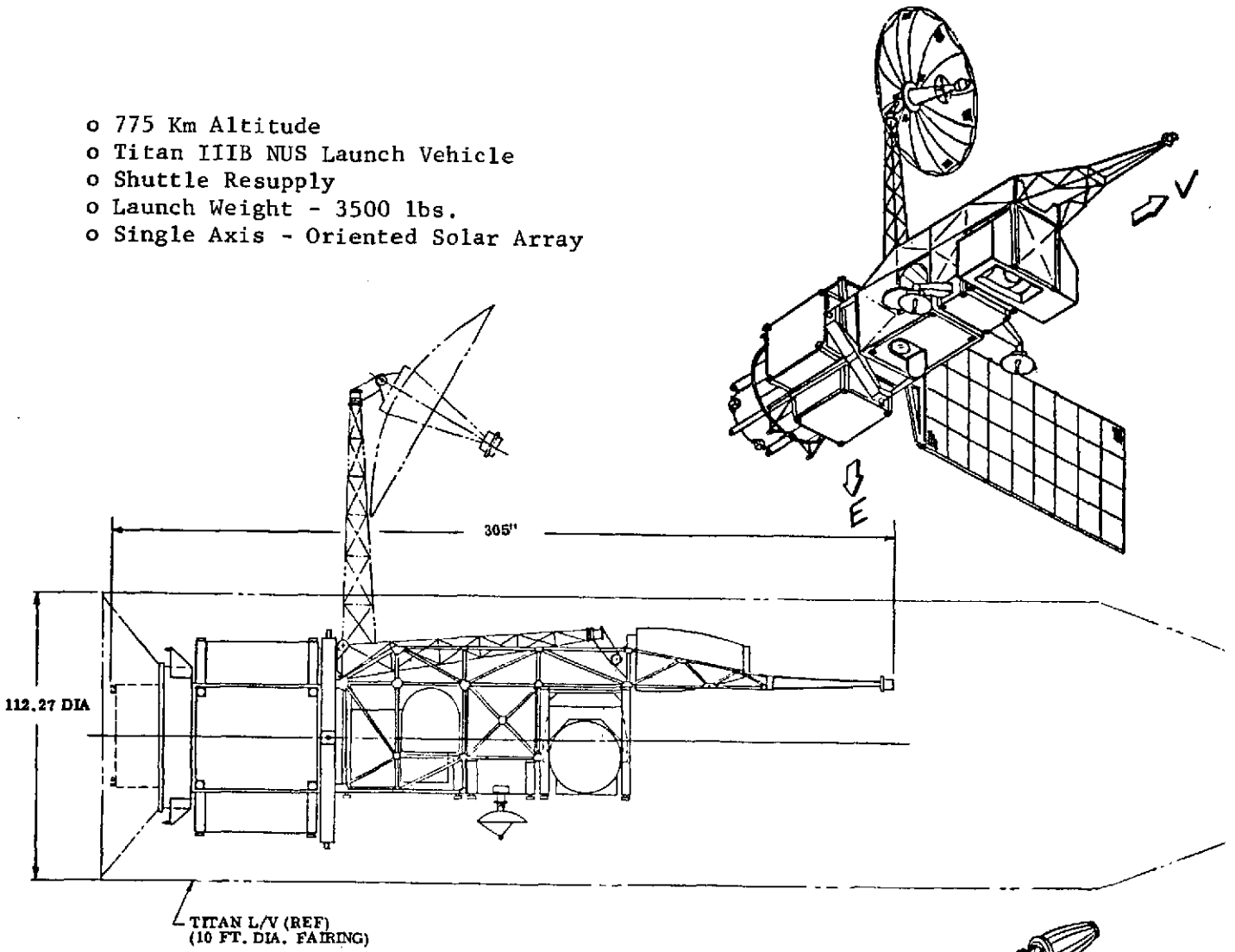

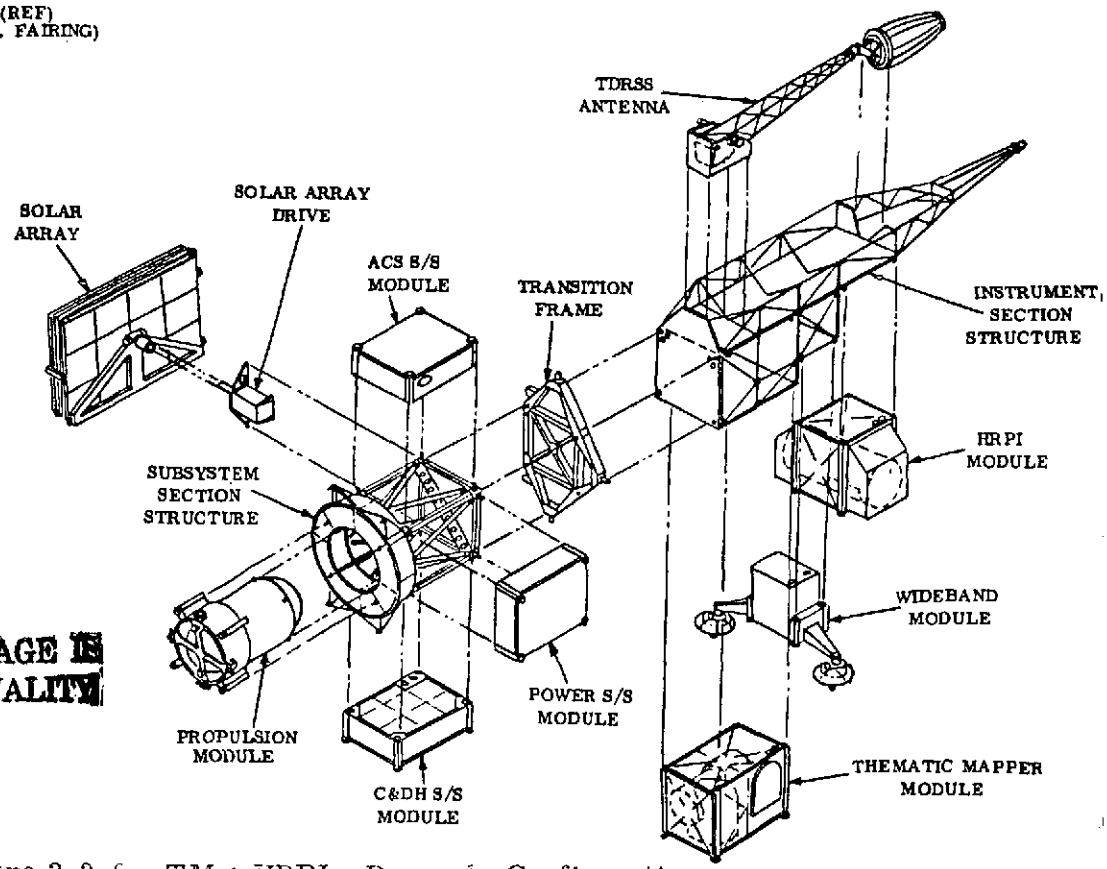

Figure 3.3-8. TM + HRPI - Resupply Configuration

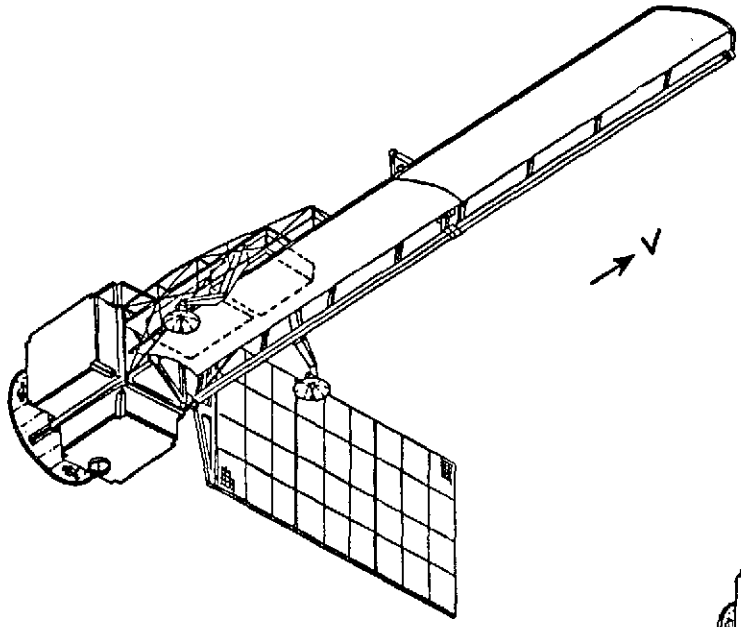

SAR + Wideband

- o 775 Km Altitude
- o 2910 Delta L/V
- o Standard Delta Fairing
- o No Retrieval
- o Launch Weight - 2306 lbs.
- o Single Axis Oriented Solar Array

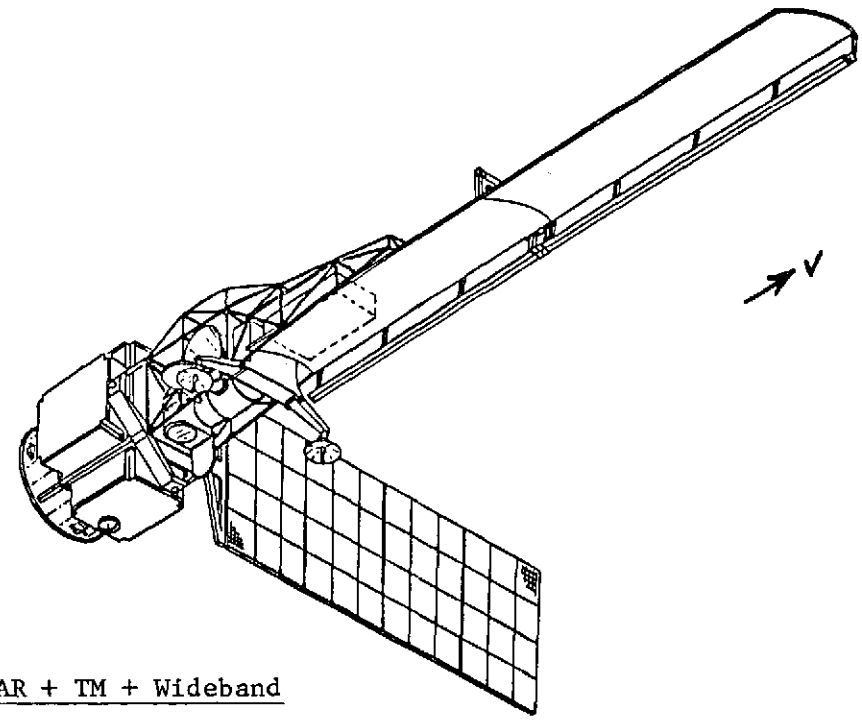

SAR + TM + Wideband

- o 775 Km Altitude
- o 3910 Delta L/V
- o Extended Delta Fairing
- o Increased Power
- o Shuttle Retrieval
- o Launch Weight - 3026 lbs.
- o Single Axis Oriented Solar Array

Figure 3.3-4. EOS SAR Configurations

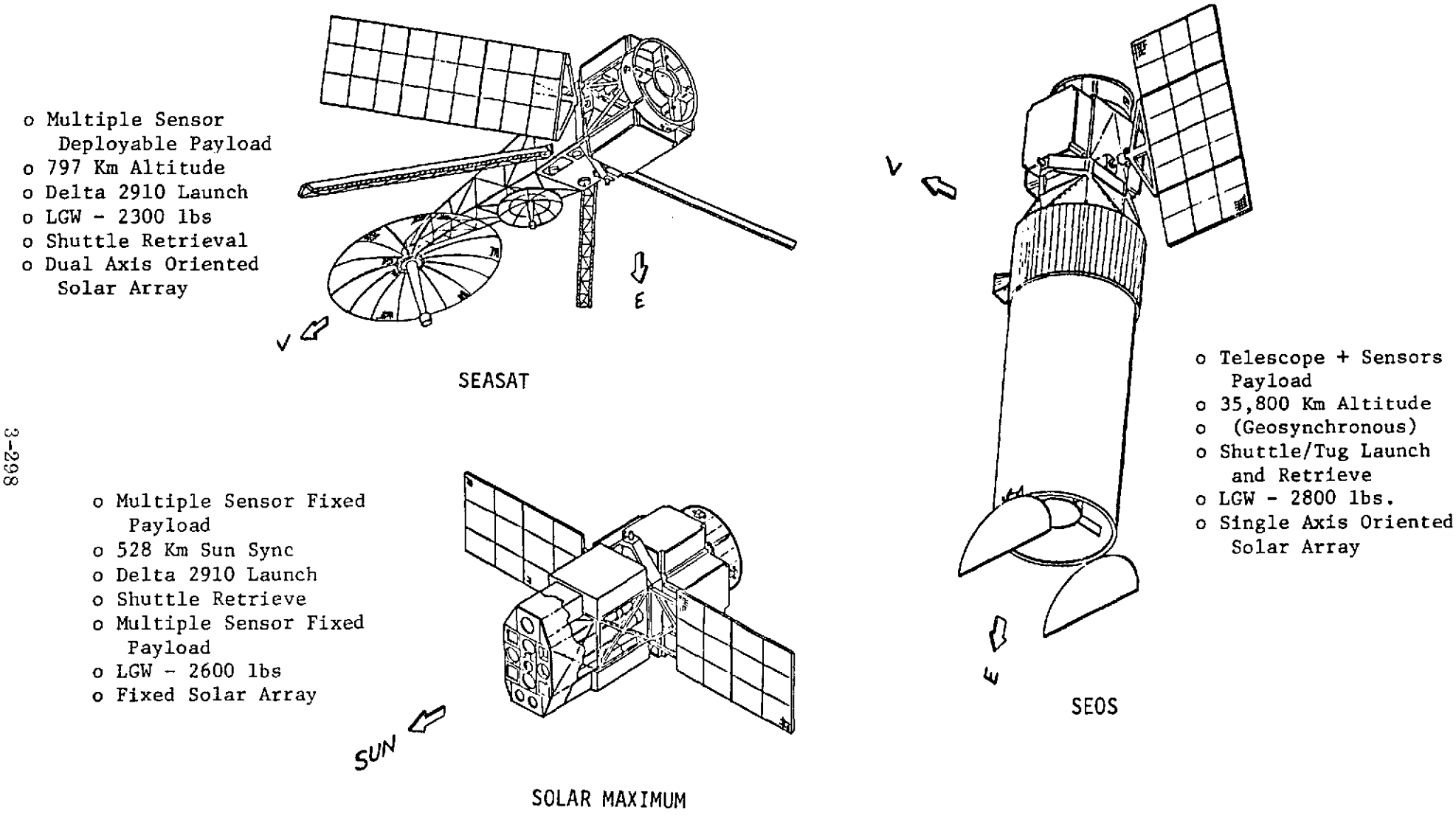

Figure 3.3-5. EOS Advanced Mission Configurations

3.3.2 SAR CONFIGURATION DEVELOPMENT

The SAR antenna represents the most difficult support and stowage payload for Delta and has been developed in greater depth to show design feasibility as described below:

3.3.2.1 SAR Definition

The SAR antenna and electronics package configurations, based on Westinghouse data, have been used in configuring the EOS spacecraft to accommodate the SAR installation. The deployed antenna is 27 feet in length, and on-orbit geometry of the antenna and electronics package is shown on Figure 3.3-6. Weight of the electronics is 213 lbs with 207 lbs maximum for the antenna giving a total SAR weight of 420 lbs. The antenna is constructed of aluminum honeycomb core with bonded aluminum face sheets. The heavier back face sheet, designed as a heat sink, is suitable for attachment of launch support and fold mechanism fittings directly to the antenna.

3.3.2.2 SAR Installation - Standard Delta Firing

Installation of the 27 ft long SAR on EOS in the standard Delta L/V fairing is shown on Figure 3.3-7. The antenna must be folded for stowage and in addition the feed requires folding inboard as shown to fit the constricted upper shroud envelope. The EOS subsystem segment is attached to a 12-in long adapter and the Transition Frame is not used due to the severe length limitations. The SAR Electronics and a wideband module are mounted in tandem to a welded aluminum tube truss structure. The orbital configuration with the antenna and solar array deployed is shown on Figure 3.3-7. This installation of SAR and a wideband payload represents the maximum practical application of SAR to the 2910 Delta launch vehicle and standard fairing from both weight and volume standpoints. Note that this configuration cannot be retrieved by Shuttle in normal operation due to elimination of the Transition Frame.

3.3.2.3 SAR Installation - 3910 Delta L/V with Extended Fairing

In order to add additional instruments and retrieval capability to the Delta-SAR configuration, it is necessary to use the 3910 improved performance launch vehicle and to extend the fairing approximately four feet in length. The added payload weight capability and fairing volume permit addition of the Thematic Mapper (or other selected instruments) and inclusion of the Transition Frame for Shuttle retrieval.

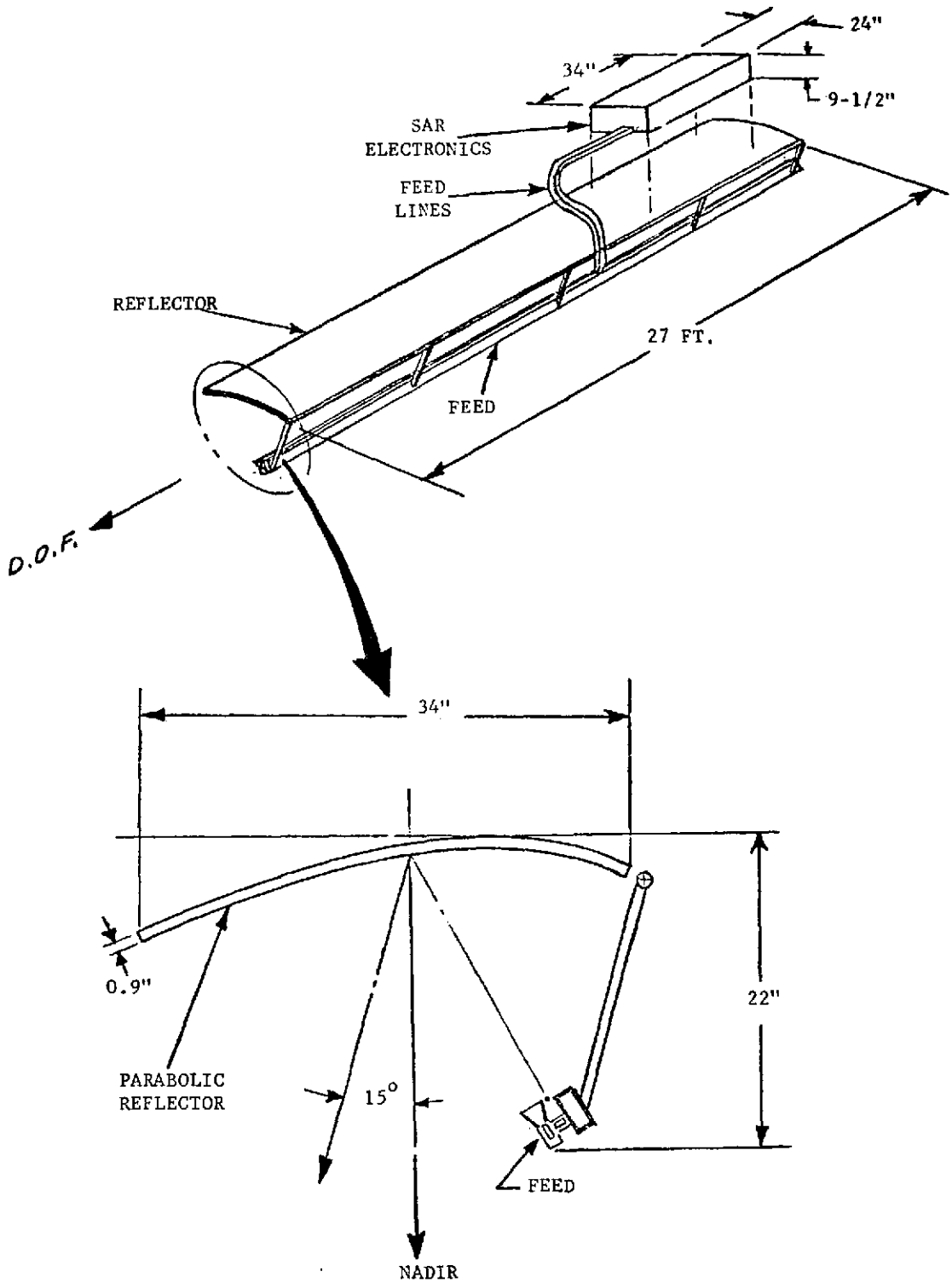

Figure 3.3-6. SAR Geometry

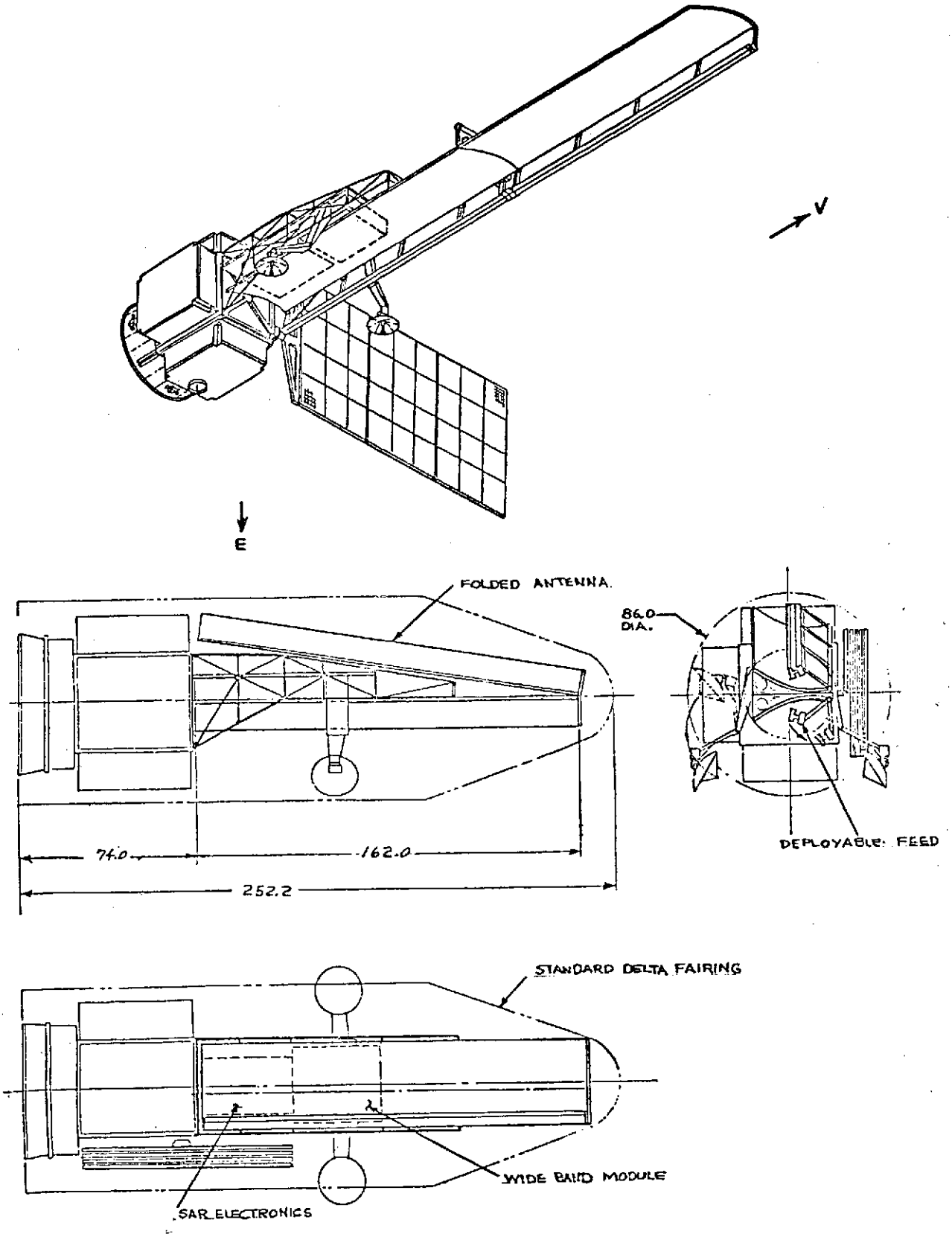

Figure 3.3-7. SAR Installation - Delta 2910

The launch arrangement for this configuration, as shown in Figure 3.3-8, locates the SAR electronics forward of the TM and Wideband Module with the antenna and feed folded for stowage as on the 2910 arrangement. Structural design and the deployment and retention mechanisms are virtually identical for the two configurations.

The orbital configuration shows the spacecraft with the antenna and solar array deployed. Note that the solar array area has been increased 30% to accommodate the added payload power requirements. This configuration with added payload and Shuttle retrieval capability results in addition cost for the 3910 Delta and the extended Delta fairing.

3.3.2.4 SAR Deployment and Launch Retention

Deployment and retention mechanisms for the SAR installation are shown on Figures 3.3-9 and 3.3-10 and the deployment sequence is illustrated on Figure 3.3-11.

The folded feed is held at the ends during launch by electrically operated pin pullers and is released after fairing ejection and automatically locks in the deployed position. Once the feed is deployed it remains locked in the open position for orbital and retrieval operations. Rigid waveguide feed lines run from the electronics box to a waveguide/coax adapter and flexible coax cables connect this adapter to the feed. This system was selected over heavier, more complex waveguide rotary joints for the three lines since the joint is only flexed once during feed deployment and losses in the short coax length appear acceptable.

Once the feed is deployed and latched, the antenna launch lock is opened electrically and the antenna unfolded by the hinge spring-rotary acutator system. This system used for either deployment or retraction uses the motor to assist or brake to provide a slow controlled rate deployment. When completely unfolded the antenna segments automatically latch. The feed joint is an RF "choke" joint which is held engaged by the antenna latches.

The launch retention system, Figure 3.3-10, uses the resilient elastomeric snubber fittings also used for solar array retention to support the folded antenna panel. The panel is held to these snubbers by a rotary drive latch mechanism which preloads the antenna to the mounts. This system provides high vibration damping for the panel and provides a reliable single point release. The fixed panel is attached to the SAR electronics box which is in turn rigidly attached to the support structure at the four corners, and additional fixed panel

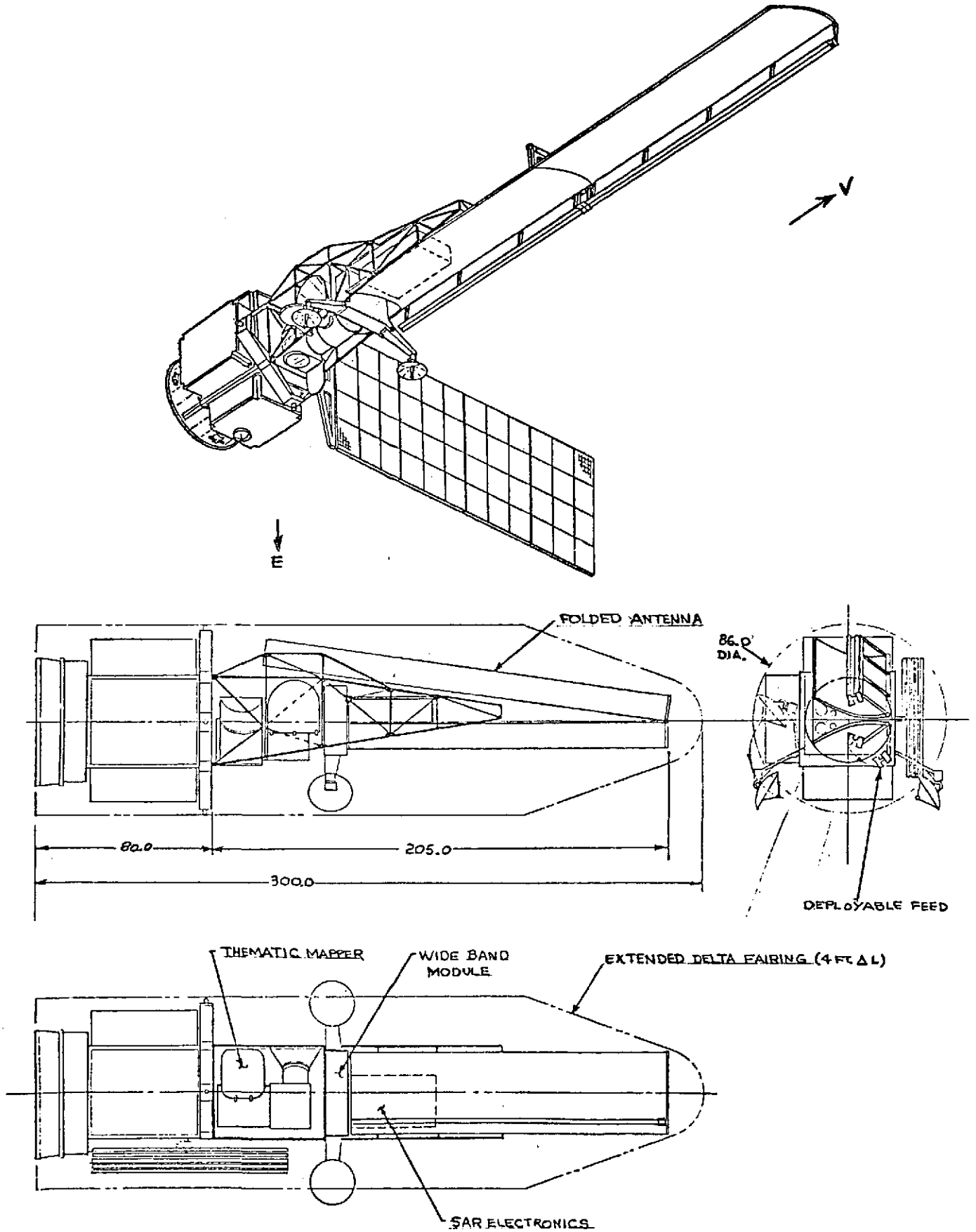

Figure 3.3-8. SAR Installation - Delta 3910

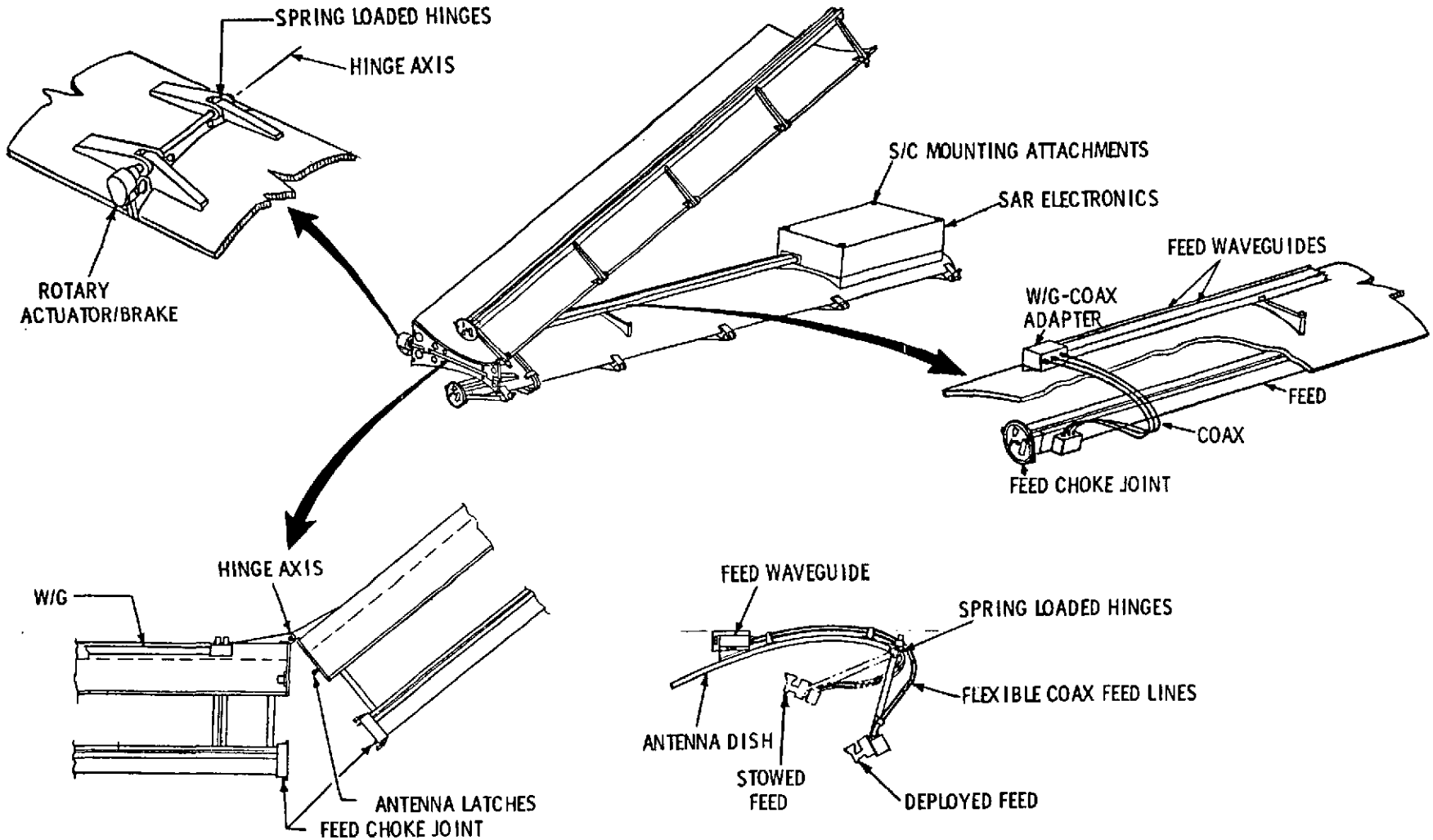

Figure 3.3-9. SAR Deployment Mechanisms

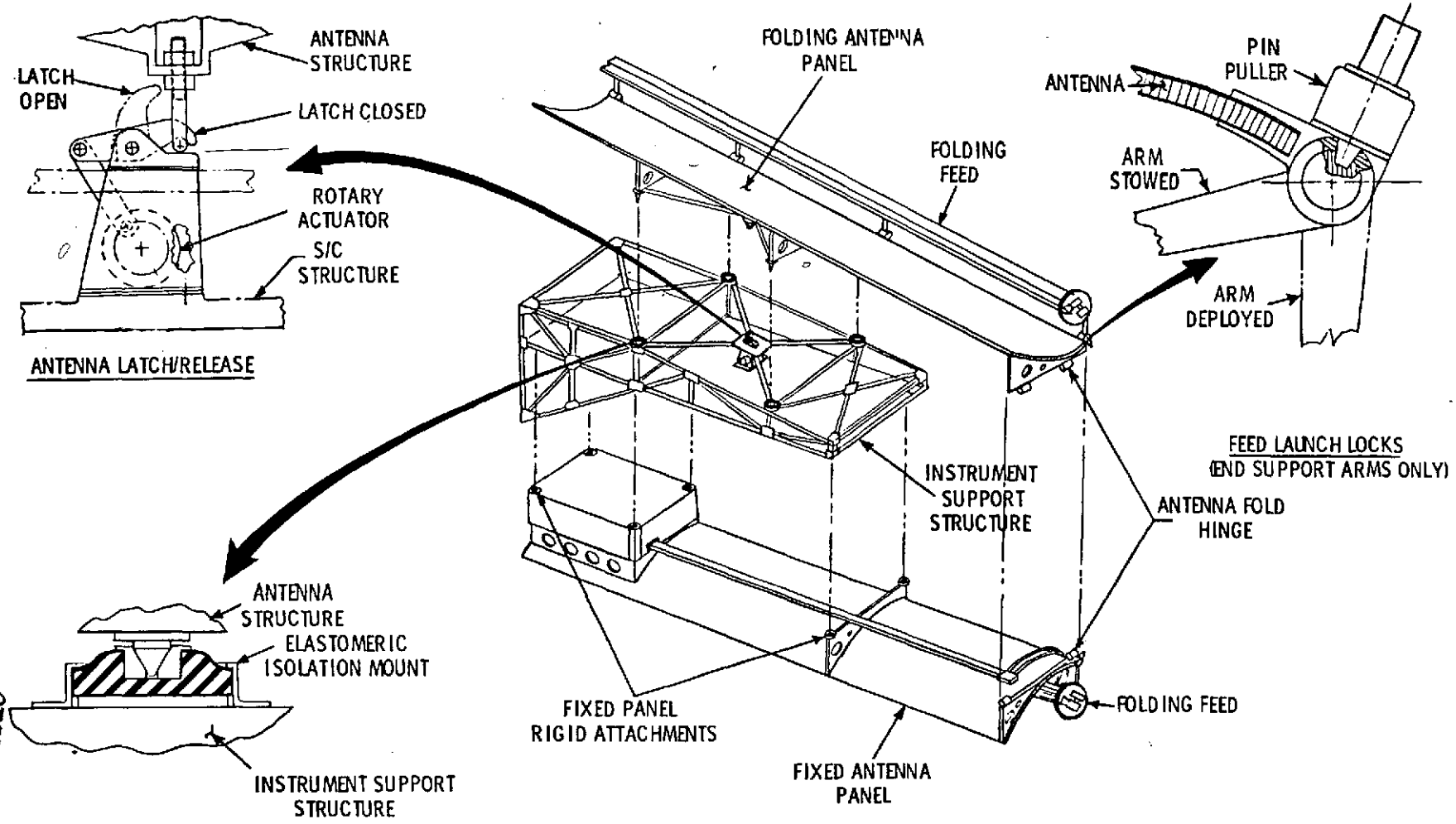

Figure 3.3-10. SAR Launch Retention

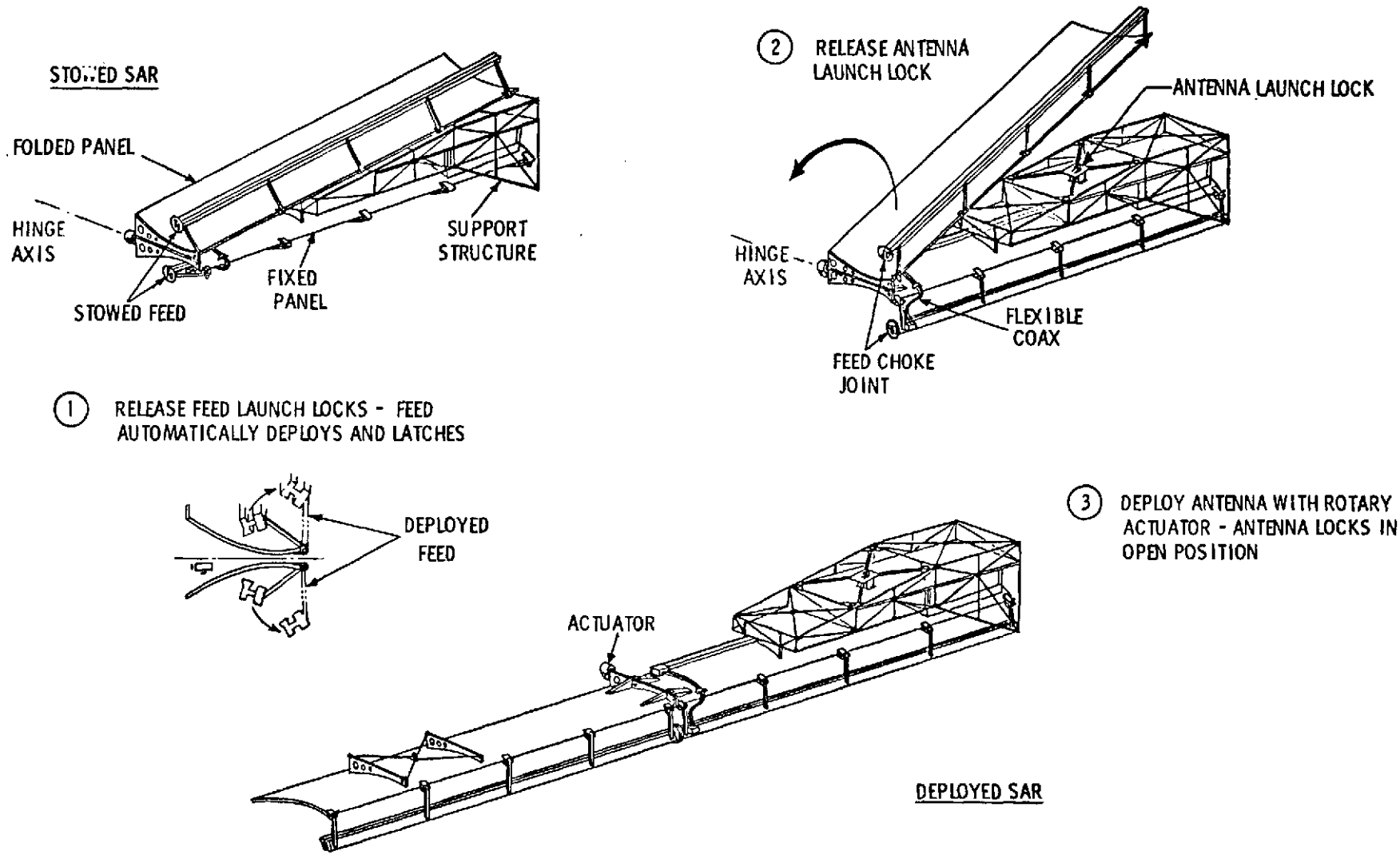

Figure 3.3-11. SAR Deployment Sequence

forward attachments will be provided if required.

The SAR deployment sequence, as shown in Figure 3.3-11, is applicable to either spacecraft installation and the retrieval stowage procedure shown on Figure 3.3-12 for the 3910 retrievable configuration, could also be used for either installation.

3.3.2.5 Summary - SAR Configurations

EOS orbital configurations with the SAR installation are shown on Figure 3.3-4 for the 2910 and 3910 Delta boosters. The 2910 version, with the standard Delta fairing, is constrainted from both weight and fairing volume and can accommodate only the SAR and a wideband module. This configuration is not normally retrievable due to elimination of the Shuttle interface Transition Frame to save space and weight.

The increased performance Delta 3910 booster, with a proposed four foot lengthened fairing, is shown with the Thematic Mapper, Wideband Module and SAR payload. This configuration also has a 30% higher power solar array and includes the Transition Frame for Shuttle retrieval.

Weights for these configurations are listed in Table 3.3-1 for both retrieve and non-retrieve cases. Note that the 2910 weight capability limits this booster to the SAR only non-retrievable configuration.

Table 3.3-1. SAR Configurations EOS Spacecraft Weights (Delta Launch Vehicles)

	EOS (TM & SAR)		EOS (SAR)	
	Non-Retrievable	Retrievable	Non-Retrievable	Retrievable
Total Basic Spacecraft	1355	1475	1325	1425
Total Mission Peculiar (less payload)	376	526	351	481
Total Payload Instrumentation	750	750	420	420 420
Thematic Mapper	330	330	---	---
SAR	420	420	420	420
Weight Contingency	250	275	210	230
Total Spacecraft Weight	2731	3026	2306	2556
Delta 2910 Capability to Mission Orbit	2530*		2580	
Delta 3910 Capability to Mission Orbit	3550* * Uses elongated shroud		3600	

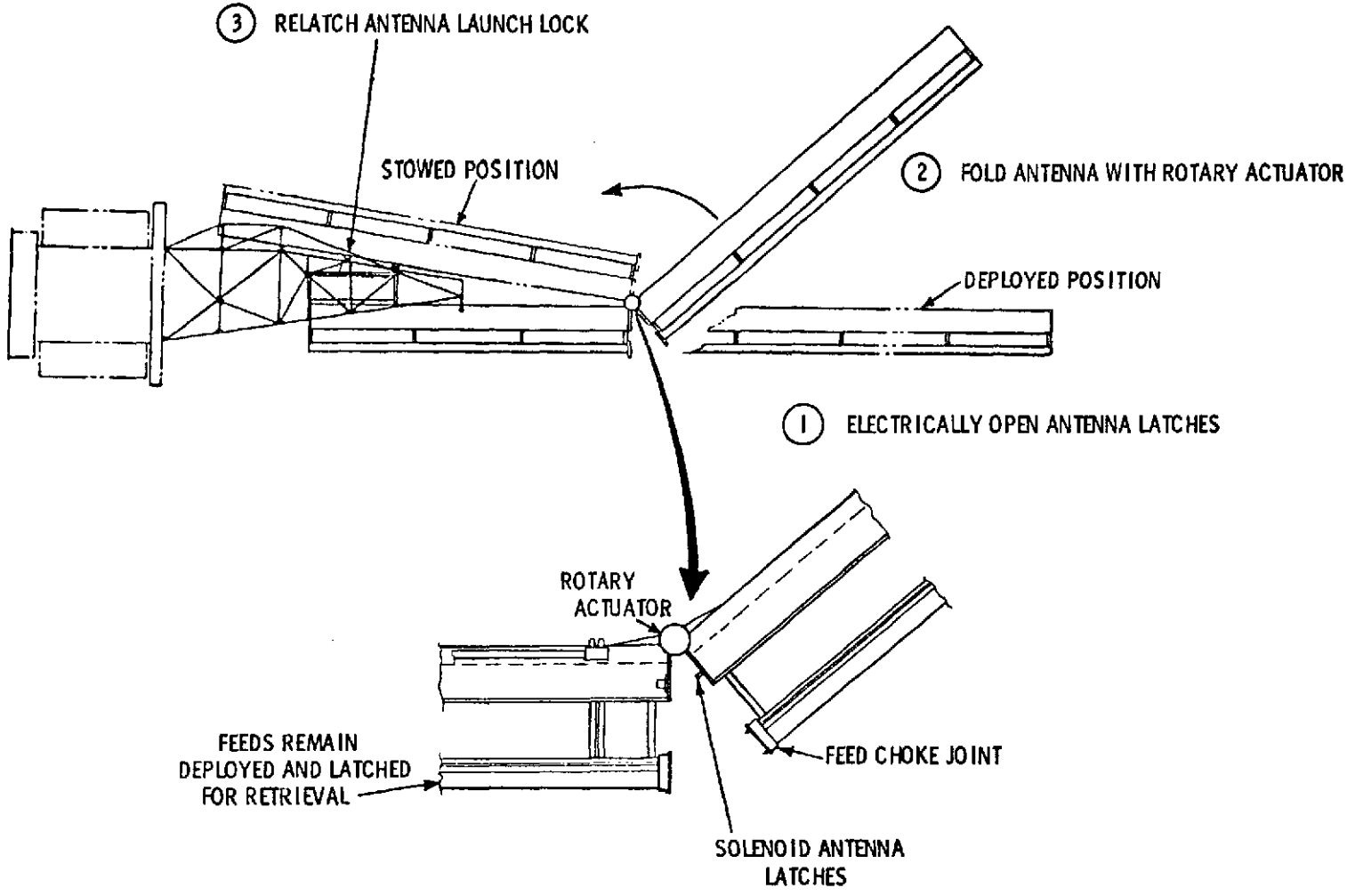

Figure 3.3-12. SAR Retrieval Stowage Sequence

SECTION 4.0

EOS GROUND SYSTEM DESCRIPTION

This section provides a description of the EOS ground system segments utilized for the EOS-A and EOS-B Satellite Programs.

This section is organized as follows:

- Section 4.1 provides an overview of the ground system segments in terms of their functions, interfaces and design concepts.
- Section 4.2 provides a baseline definition summary, a detailed baseline description and an overview for the Operations Control Center (OCC).
- Section 4.3 provides a baseline definition summary, a detailed baseline description and an operations overview for the Central Data Processing Facility (CDPF), and
- Section 4.4 provides a baseline definition summary, a detailed baseline description and an operations overview for the basic Low Cost Readout Station.

4.1 OVERVIEW

4.1.1 IDENTIFICATION OF EOS SYSTEM SEGMENTS

The EOS System consists of the following major segments:

- o EOS Project Office
- o EOS Ground Data Handling System comprised of the Operations Control Center (OCC) and the Central Data Processing Facility (CDPF)
- o NASA Data Processing Facility
- o EOS Support Services provided by the NASA Orbit Determination Group (ODG) and the National Oceanographic and Atmospheric Administration (NOAA).
- o Spaceflight Tracking and Data Network support from the Tracking and Data Relay Satellite System (TDRSS) subnet, the ground site subnet and the NASCOM network.
- o EOS-A and EOS-B Satellites
- o Wideband Data Relay support provided by a US Domestic Satellite(s) and necessary transmitting and receiving ground terminals.
- o Low Cost Readout Stations and
- o Prime International Readout Stations

A simplified system data flow for the EOS system is shown on figure 4.1-1. The following paragraphs within this section will discuss the functions, interfaces and design concepts of the major segments identified above.

4.1.2 EOS PROJECT OFFICE SEGMENT

The EOS Project Office is the focal point for the EOS System and provides the overall management direction in the utilization of the EOS System.

The Project Office coordinates and approves requests for processed instrument data (MSS and TM data for EOS-A and TM and HRPI data for EOS-B) from NASA Investigators and the User Agiencies and places these requests in the form of requirements on the EOS Ground Data Handling System (GDHS). It, in turn, monitors the delivery of the processed data products from the GDHS to the various NASA Investigators and User Agencies by means of periodic status reports provided by the GDHS.

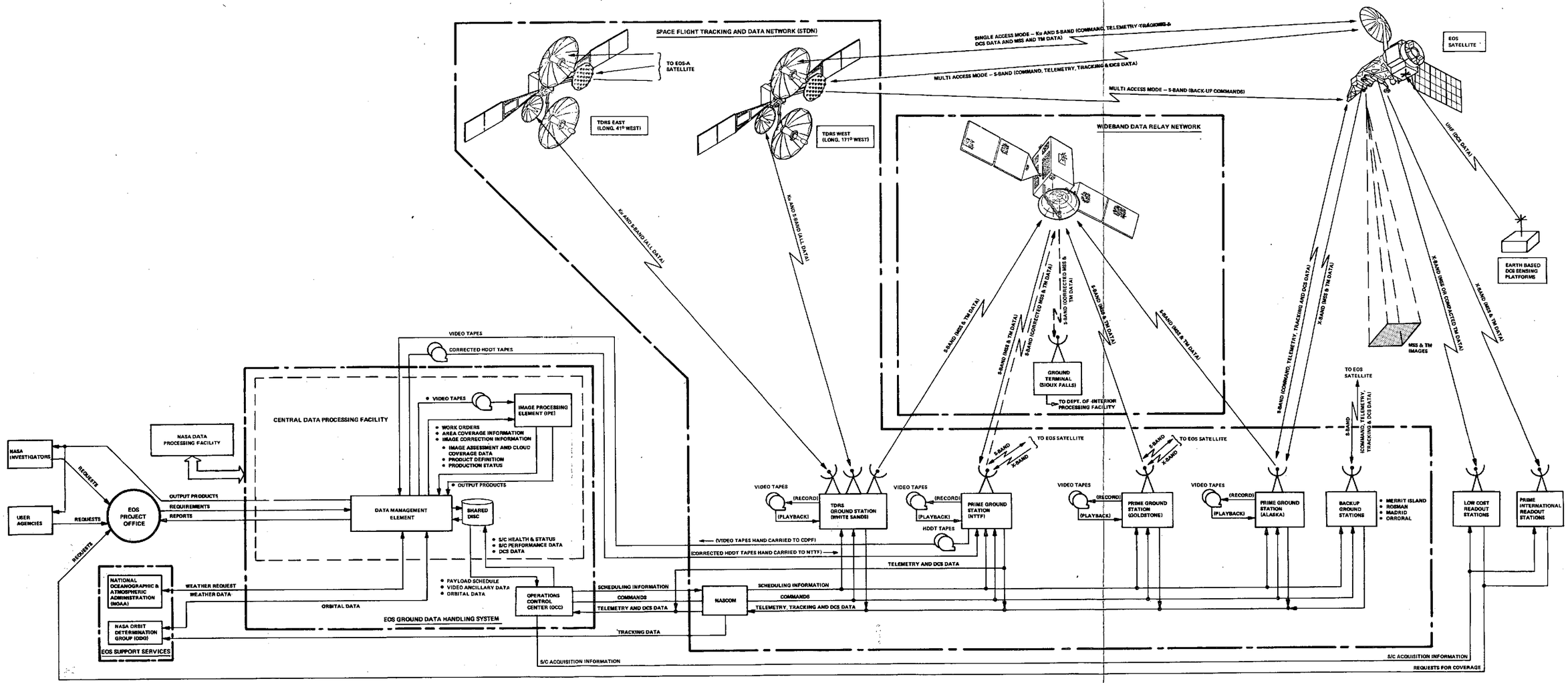

Figure 4.1-1. Simplified Data Flow for EOS System

The EOS Project Office coordinates and approves requests from the Low Cost Readout Stations and International Readout Stations for transmission of instrument data to the various stations for their areas of inerest. The Project Office also places these requests in the form of requirements on the GDHS which, in turn, provides the predicted spacecraft acquisition time and position directly to the Low Cost Readout Stations and International Stations as confirmation of their request. The GDHS periodic status reports will provide confirmation of successful (or unsuccessful) completion of these requirements.

4.1.3 EOS GROUND DATA HANDLING SYSTEM

4.1.3.1 Organization and Responsibilities

The EOS Ground Data Handling System is comprised of two major segments - the Operations Control Center and the Central Data Processing Facility. The Central Data Processing Facility, in turn, is comprised of the Data Management Element (DME) and the Image Processing Element (IPE).

The Data Management Element provides the focal point within the EOS Ground Data Handling System (GDHS) for interfacing with the EOS Project Office for requirements, with the NASA Orbit Determination Group (ODG) for spacecraft orbital definition data with the National Oceanographic and Atmospheric Administration (NOAA) for predicted weather information data. In addition it provides the centralized control of the EOS Ground Data Handling System in determining payload scheduling, directing product processing and providing accounting and reporting of Ground Data Handling System and EOS Spacecraft status.

The Operations Control Center (OCC), based on payload scheduling provided by the Data Management Element, provides the focal point for mission orbital operations. The OCC is responsible for the functions associated with networks scheduling, spacecraft command and control, telemetry acquisition and processing, and spacecraft performance evaluation and management.

The Image Processing Element (IPE) provides the capability to process and correct Thematic Mapper (TM) Instrument data (obtained from EOS-A and EOS-B spacecraft) and High Resolution Pointable Imager (HRPI) Instrument data (obtained from EOS-B spacecraft) recorded on video tapes. (Note: The ERTS-C NASA Data Processing Facility (NDPF) will provide the capability to process and correct Multispectral Scanner (MSS) data obtained from the EOS-A spacecraft). The output products generated by the Image Processing Element, based on work orders issued by the Data Management Element, are in the form of high density digital tapes (HDDT's), computer compatible tapes (CCT's), film and prints.

4.1.3.2 Data Flow Summary

User requirements, provided by the EOS Project Office to the Data Management Element, are processed through a "priority pre-processing" function which produces a priority list of imagery to be acquired in subsequent spacecraft orbits taking into account what has been processed, what is presently scheduled and what was taken but not yet processed into a user output product. This data, along with orbital characteristic data and weather data, is transferred to a "payload schedule" function which creates a time sequence payload activities list for upcoming pass for processing by the Operations Control Center.

In addition, a data file containing ground control point information (for those US areas to be acquired), predicted ephemeris data and ancillary data is created which will be formatted by the OCC and transmitted via the Spaceflight Tracking and Data Network to the spacecraft for insertion into the instrument data video stream to simplify the interface with the Image Processing Element during initial processing of the video data.

Prior to a pass, the Operations Control Center will utilize the payload time sequence activities list and the data file identified above and generate a system activity plan incorporating the payload scheduling inputs and a series of realtime and stored commands which will be utilized to control the spacecraft and instruments via the Spacecraft Tracking and Data Network.

During spacecraft passes the Operations Control Center will retrieve spacecraft telemetry data and earth based sensing platform data (DCS data) for processing in real-time, as well as playback telemetry and DCS data from the narrowband recorders on the spacecraft. The telemetry data will be utilized by the Operations Control Center in spacecraft performance evaluation and management and provide feed-back information to the Data Management Element concerning the actual scenes obtained and the status of the spacecraft for inclusion into the centralized data base.

The DCS data received at the Operations Control Center will be processed and placed in a shared file by the Operations Control Center; the Data Management Element will access this file, process the information, and disseminate it to the users under the direction of the EOS Project Office. A catalog file will be created and maintained by the Data Management Element and will be used in printing periodic DCS catalogs.

Upon receipt of the instrument wideband video tapes at the Ground Data Handling System, the Data Management Element will enter an accounting of these tapes into the data base and provide the tapes to the Image Processing Element along with the predicted content of the video tape. (Note: The video tapes containing the Multispectral Scanner (MSS) data will be processed by the ERTS-C NASA Data Processing Facility). Screening of video tapes containing the Thematic Mapper (TM) data and High Resolution Pointable Image (HRPI) data will be performed by the Image Processing Element Digital Image Correction Subsystem and the actual contents of the video tapes including image assessment and cloud coverage data will be provided to the Data Management Element for subsequent generation of work orders for standard and custom products.

During the screening process the Digital Image Correction Subsystem will extract all necessary information to calculate the geometric and radiometric corrections based on ancillary data contained in the video in preparation for the image correction process. The image correction process is then performed utilizing the above data and any special instructions from the Data Management Element (re use of best fit ephemeris in place of predicted ephemeris, nearest neighbor resampling technique instead of $\frac{\sin x}{x}$, etc.) and the information describing the content of each HDDT generated

during the image correction process is provided to the Data Management Element.

The Data Management Element production control will produce work orders for all production work to be performed by the Image Processing Element subsequent to the generation of the HDDT containing the corrected image data, and monitor in turn the status of the Image Processing Element.

Since the Data Management Element has ready access to the data base and contains all the file management software, it is evident that is can be used for all management accounting and reporting. Therefore, it will provide an accounting and reporting of all EOS Ground Data Handling System activities including the status of production, user requirements and work orders, plus available coverage and product information. Product information will be maintained in a browse file which will provide users with the means to query the data base to determine availability of imagery and tapes.

4.1.4 NASA DATA PROCESSING FACILITY

the ERTS-C NASA Data Processing Facility (NDPF) provides the capability to process, correct and generate output products of the Multispectral Scanner (MSS) data obtained from the EOS-A Satellites

The Data Management Element (DME) provides to the NDPF the video tapes containing the MSS raw data, work orders for the output products and the necessary image processing information required by the NDPF. The output products generated by the NDPF will include corrected high density digital tapes (HDDT's), computer compatible tapes (CCT's), film and prints. The output products are returned to the DME for accounting and distribution to the users.

4.1.5 EOS SUPPORT SERVICES

The EOS Support Services are provided by the NASA Orbit Determination Group (ODG) and the National Oceanographic and Atmospheric Administration (NOAA).

4.1.5.1 NASA Orbit Determination Group (ODG)

The National Aeronautics and Space Administration Orbit Determination Group will acquire and process all mission tracking data of the EOS Spacecraft via the Spaceflight Tracking and Data Network and provide to the Data Management Element the information required to conduct mission planning and scheduling operations. This information will include the predicted satellite ground track, sun elevation angle along the predicted ground track, predicted ground station contact profiles (both prime and international stations), predicted satellite X-band antenna pointing profiles to the ground stations as well as predicted satellite TDRS antenna pointing profiles to the Tracking and Data Relay Satellites.

The Orbit Determination Group will also monitor the spacecraft orbit, determine orbit change requirements, compute orbit adjust data (ignition time, duration and direction) based on orbit adjust subsystem parameters provided by the Data Management Element and verify orbit adjustments of the EOS spacecraft. Prediction data will include the effects of planned orbit adjustments and will be provided to the Data Management Element with sufficient time-to-position accuracy for system scheduling.

In addition, the Orbit Determination Group will provide best fit ephemeris data to the Data Management Element in a timely manner, for digital image correction of instrument data required to satisfy position accuracy requirements of $\pm$ 170 meters.

The information exchange between the Orbit Determination Group and the Data Management Element will be via a direct computer-to-computer hook-up.

4.1.5.2 National Oceanographic and Atmospheric Administration (NOAA)

The NOAA Space Flight Meteorology Group will provide weather (primarily cloud coverage) data to the Data Management Element required to conduct mission planning and scheduling operations of the EOS Spacecraft. These inputs may be provided on either a standing or special request basis.

The Data Management Element will provide the NOAA Space Flight Meteorology Group with information defining the candidate areas of instrument coverage being considered. The NOAA Space Flight Meteorology Group will provide the forcasted weather information in terms of revolution number for which the forecast is provided, latitude where the forecast begins (center part of ground swath), forecast in terms of percent cloud free skies within the latitude boundries and latitude at which forecast changes or ends.

The information exchange between the NOAA Space Flight Meteorology Group and the Data Management Element will be via a direct computer to computer hook-up.

4.1.6 SPACEFLIGHT TRACKING AND DATA NETWORK

The Spaceflight Tracking and Data Network is comprised of the Tracking and Data Relay Satellite System (TDRSS) subnet, the ground site subnet and the NASCOM network.

4.1.6.1 Tracking and Data Relay Satellite System Subnet

The Tracking and Data Relay Satellite System consists of two geosynchronous relay satellites located 130 degrees apart in longtitude (41° west longitude and 171° west longitude) and a ground station located at White Sands, New Mexico. A "bent-pipe" concept is used in the design of the telecommunications service system (all communication signals received at the TDRS are translated in frequency and retransmitted) between the EOS Satellite and the TDRS ground station. A real-time coverage of 95% of the earth is possible with the planned altitude and inclination of the EOS Satellites. The planned utilization of the TDRSS subnet for the EOS program is primarily for acquisition of non-U.S. scene data and small sections of U.S. scene data not available from the three prime receiving stations (Alaska, Goldstone and NTTF).

The TDRS provides two types of space-to-space communication links: a single-access system and a multi-access system. The single access system utilizes Ku and S-band or S-band between one of the two large 3.8 meter antennas on the TDRS and the 2.44 meter TDRS antenna on the EOS Satellites. Simultaneous use of both the Ku and S-band provides the capability for transmission of the instrument data at Ku-band and real-time commands and on-board computer loads (stored commands and data), real-time

telemetry including DCS data, on-board telemetry dump, on-board computer dump and tracking data. Utilization of the S-band links only in this mode (instrument data not required) provides the full S-band capability described above.

The multi-access system utilizes S-band between the array antenna on the TDRS and either the 2.44 meter TDRS antenna or the omni-directional S-band antenna on the EOS satellite. In the mode utilizing the 2.44 meter TDRS antenna on the EOS satellite the real-time commands and on-board computer loads are limited to a maximum of $\sim$ 1 Kb/s (nominally 2 Kb/s) on the forward link; the 10 Kb/s on the return link provide the capability for real-time telemetry, including DCS data, and tracking data transmission for the EOS-A and EOS-B Satellite (real-time telemetry transmission rates of 4 Kb/s). The return link will not support on-board telemetry dump and on-board computer dump functions because of the high data rates associated with these functions. This mode of operation is limited to real-time commanding, at reduced rates, and real-time monitoring of the EOS Satellite.

The mode utilizing the omni-directional S-band antenna on the EOS Satellites, is strictly a back-up command mode for gaining access to the EOS Satellites when the 2.44 meter TDRS antenna is not activated or not pointing in the proper direction. The real-time commands are limited to 100 to 150 b/s. In normal operation, the 2.44 meter TDRS antenna on the EOS spacecraft will be programmed for acquisition by the TDRS during the planned contact periods by the use of stored commands previously transmitted to the EOS Satellites through the ground and NASCOM networks via the Operations Control Center.

The planned 56 Kb/s forward link capacity between the Goddard Space Facility Center the TDRSS ground terminal is adequate for EOS Satellite command traffic. The planned 1.344 Mb/s return link capacity between the TDRSS ground terminal and Goddard Space Facility Center is adequate for the EOS Satellite telemetry and tracking but is insufficient for the instrument data.

An EOS Program peculiar addition is required at the TDRSS ground terminal to down convert, amplify, demodulate and record the instrument data on wideband video tapes.

This addition also must interface with the Wideband Data Relay Network, described in Section 4.1.8, to permit the playback and relaying of instrument data to the NTTF at playback data rates compatible with the available network.

4.1.6.2 Ground Site Subnet

Current planning indicates that the Ground Site Subnet, in the EOS era, will include the following locations: Alaska, Bermuda (launch only) Goldstone, Madrid, Merrit Island, Roseman, Tananarive (launch only) and the NASA Test and Training Facility (NTTF).

The prime EOS stations (defined as stations which will have the capability to receive the X-band instrument data from the EOS Satellites) are Alaske, Goldstone, and the NTTF. Modifications are required at the prime stations to include this capability. The 30 foot USB antenna system at Goldstone and NTTF and the 40 foot telemetry S-band antenna system at Alaska require modifications to incorporate dual S-band and X-band reception to support instrument data reception at these sites. In addition, the previously discussed modifications required to record the instrument data at all of the three prime stations and playback from the Alaska and Goldstone stations at reduced rates through the Wideband Data Relay Networks to the NTTF station are also required at these stations.

The three prime EOS stations also provide the S-band TT&C interface between the Satellites and the Operations Control Center via the NASCOM network. The Madrid, Merrit Island, Orroral, and Roseman Stations as well as the TDRSS subnet, discussed in Section 4.1.6.1, are considered backup stations for the EOS Program for the transmission of commands and the reception of telemetry and tracking data.

4.1.6.3 NASCOM Network

The primary functions of the NASCOM Network are to relay

1) in realtime the commands, on-board computer loads (stored commands and data) and scheduling information generated at the Operations Control Center to the TDRSS Subnet and Ground Site Subnet for subsequent transmission to the EOS Satellite

2) the real-time telemetry including DCS data,

3) in near real-time the on-board computer dump data and in non real-time the on-board telemetry dump received at the TDRSS Subnet and Ground Site Subnet to the Operations Control Center for subsequent processing.

The real-time telemetry, the on-board telemetry dump and the on-board computer dump received at the NTTF is transmitted in real-time (no recording and subsequent playback) directly to the Operations Control Center over existing 10 MHz hardware lines between the NTTF and OCC.

The function of the NASCOM Network is also to relay in real-time the tracking data received at the TDRSS Subnet and Ground Site Subnet to the NASA Orbit Determination Group for subsequent orbit definition processing.

The Operations Control Center communications with the TDRSS through the NASCOM interface is similar to the communications with the Ground Site Subnet except as noted in the transmission rates discussed under the TDRS multi-access system mode in Section 4.6.1.1.

The present link between the ERTS OCC and the NASCOM center at Goddard Spaceflight Center is two 56 Kb/s data lines. This link permits the transfer of the EOS-A and B Satellites on-board telemetry dump (80 Kb/s) in real-time along with the real-time telemetry data from those sites which have 1.344 Mb/s data lines to the NASCOM center such as the TDRSS ground terminal, Alaska and Rosman, but requires the on-board computer dump (128 Kb/s) to be recorded and played back at a reduced rate. Improvement in the link between the OCC and NASCOM Center chould be considered to remove this restriction especially in the TDRSS Ground Terminal which does not utilize recorders in its normal mode of operation for data transfer between the user satellites and the NASCOM Network.

The backup stations and the Goldstone prime station will not normally be utilized to process the on-board computer dump data. However, they will be required occasionally to record and playback (at a 1:4 ratio for EOS A and B) the on-board telemetry dump data over an existing 56 Kb/s data line after completion of a pass over the respective stations.

4.1.7 EOS-A AND EOS-B SATELLITES

Section 3.0 of this volume provides a detailed description of the EOS-A Satellite. The major difference between this satellite and EOS-B is the instruments (MSS and TM on EOS-A and TM and HRPI on EOS-B) and the wideband data rates associated with these instrument configurations.

4.1.8 WIDEBAND DATA RELAY NETWORK

The primary function of the Wideband Data Relay Network is to relay in near real-time, the raw EOS Instrument Data recorded on video tape at the TDRSS Ground Terminal, the Alaska and Goldstone Prime Ground Stations to the NTTF through a Domestic Satellite (DOMSAT). In addition this network will relay the corrected EOS Instrument Data recorded on high density digital tapes from the NTTF to a ground terminal located at the Department of Interior in Sioux Falls, S.D.

At the present time, there are three U.S. Domestic Satellite Common Carrier companies who have C-band communication satellites on order. These companies are: (1) Western Union Telegraph Co., (2) RCA-Globcom, and (3) Comsat General. The first two companies will lease transponder channels directly to the user community. Comsat General will lease its satellites solely to AT&T, who in turn will lease individual channels to the user community. There are other companies who currently are planning to deploy their own satellite systems, but have not started yet. These companies are American Satellite Corporation (ASC) and a team consisting of IBM/Comsat General (formerly CML Satellite Corporation).

Considering only the first 3 systems now underway, there will be at least 6 operating spacecraft in orbit by the middle to end of 1976, providing a total of 120 36-MHz channels. Each DOMSAT system operator will have a network of communications ground terminals located throughout CONUS in the high density traffic areas. These stations can be used by the user community to access the spacecraft. Alternatively, a user, if he so desires, can use his own ground terminal for point-to-point communications, leasing only the number of 36 MHz channels he needs.

While the number of transponder channels per satellite system may vary, the individual channels are basically the same for all systems. These are 36 MHz channels, center frequencies separated by 40 MHz, with output powers of 5-6 watts per channel. The operating frequency band is C-band (6 GHz uplink and 4 GHz down-link). Considering the area coverage requirements, the downlink antenna gain is typically +30 dB on-axis and about +27 dB at the edge of CONUS. Therefore, the available EIRP (after losses) from the spacecraft would be about +36 dBW on-axis (+33 dBW - edge of beam). The transponder channels are capable of handling virtually all types of FM or PM signals, including FDM/FM voice, single channel per carrier (SCPC), digital data, and TV.

Starting in the mid-80's, it is possible that the present C-band systems will be augmented with Ku-band systems (14 GHz uplink/12 GHz downlink). The service provided by the new Ku-band systems would be identical to that of the C-band systems with the possibility of wider (but fewer) bandwidth channels being provided (100-200 MHz). EIRP's would be higher by 5 to 6 dB to provide for system operation during periods of heavy rainfall which increases the propagation loss significantly.

For the EOS application it is assumed that NASA will provide their own ground terminals at the TDRSS Ground Site and at the three Prime EOS Ground Stations for point-to-point communications while leasing one of the 36 MHz channels from one of the three U.S. Domestic Satellite Common Carrier companies identified above.

The Multispectral Scanner (MSS) data can be transferred over the 36 MHz channel at the recorded rate while the Thematic Mapper (TM) data and High Resolution Pointable Imager (HRPI) data will require playback rates of approximately 1:2 and 1:4 to be compatible with the 36 MHz channel capacity.

4.1.9 LOW COST READOUT STATIONS

Based on land coverage schedules provided by the EOS Project Office, the Low Cost Readout Stations will request transmission of instrument data from the EOS Satellite over their areas of interest. Confirmation of their request will be in the form of predicted spacecraft acquisition time and position and period of transmission over the requested area as provided by the EOS Ground Data Handling System.

For the EOS-A Satellite, the instrument to be transmitted from the fixed beam antenna is selectable, either the full five band Multispectral Scanner (MSS) data or Compacted Thematic Mapper (CTM) data. Various modes of operation will exist for the Compacted Thematic Mapper data and the user will be required to identify the mode of operation in his request.

The principal modes of operation are as follows:

a) All bands @ reduced resolution (60m) and full swath width (185 Km)

b) All bands @ full resolution (30m) but limited to 25% swath width (46Km) selectable by the user

c) Any three of the five primary bands selectable by the user @ full resolution (30m) but limited to 50% swath width (92.5 Km) also selectable by the user, and

d) Any one of the five primary bands selectable by the user @ full resolution (30m) and full swath width (185 Km)

The data transmission rate of the Multispectral Scanner and the various modes of the Thematic Mapper will be approximately 15 Mb/s.

For the EOS-B Spacecraft the instrument data available to the individual Low Cost Readout Stations via the Spacecraft will be only the Compacted Thematic Mapper data described above; compacted High Resolution Pointable Imager (HRPI) data is not envisioned for the Low Cost Readout Station user because of its high data rates/band and reduced swath width as compared to the Thematic Mapper instrument data.

The Low Cost Readout Station is capable of acquiring image data from the EOS satellites over a ground area within a 500 Km radius from the Low Cost Readout Station.

The data acquisition and data processing and correction portions of the Low Cost Readout Station will be standardized to achieve commonality and hence lowest costs; the display and extractive portion of the stations must generally be tailored to fit the needs of the particular user and are, for all practical purposes, station unique.

4.1.10 INTERNATIONAL READOUT STATIONS

Two international readout stations presently exist for reception and processing of ERTS Multispectral Scanner (MSS) data. They are Brazil and Canada. Italy is in the process of building a readout station of this capability while Iran and Japan are in the proposal stages. Argentina, Germany and Venezuela have indicated intentions to build readout stations while Australia is presently in a study mode.

The interfaces between the prime international readout stations, the EOS Project Office and the Ground Data Handling System are similar to that described for the Low Cost Readout Station except that both full Thematic Mapper (TM) data and MSS data will be transmitted to the international stations from EOS-A while both full Thematic Mapper and High Resolution Pointable Imager (HRPI) data will be transmitted from the EOS-B Satellite.

The existing ERTS type prime international stations planned in the EOS era will require a series of modifications to be compatible with the growth of the EOS Program. The minimum initial modification required is a modification to their data acquisition system to permit receipt of MSS data from the EOS-A Satellite wideband pointable antennas operating as X-Band.

Upon successful performance of the development TM instrument and prior to the completion of EOS-A flights, the international stations will require upgrading to provide the capability to receive and process TM data if not installed in the initial modification. With this modification, continuation of the TM data from the EOS-B Satellite is assured.

The last modification to the International Stations is to add the capability for processing the HRPI data. It is envisioned that this modification will be delayed until operational experience on the development unit is obtained by NASA.

4.2 OPERATIONS CONTROL CENTER

The design concept for the EOS Ground Data Handling System centralizes all control and monitoring within the Data Management Element of the Central Data Processing Facility. The Operations Control Center, based on payload scheduling (time sequenced activities) provided by the Data Management Element, will provide the focal point for mission orbital operations.

The Operations Control Center will consist of all the hardware, software and personnel needed to:

- interface with the Spaceflight Tracking and Data Network (STDN) for the scheduling and processing of data between the OCC and EOS Satellites,
- command and control the Satellites to acquire mission data in accordance with EOS project requirements,
- acquire and process telemetry information to evaluate and manage the performance and health of the spacecraft
- provide to the Data Management Element
  1) the actual satellite status and data coverage versus scheduled coverage for use in subsequent Image Processing,
  2) Data Collection System data for processing and distribution,
  3) satellite and ground station configuration status and constraints for follow-on mission scheduling activities.

The design implementation configuration selected for the Operations Control Center, in combination with the Data Management Element of the Central Data Processing Facility, employs three medium scale computers and a common shared disk. In normal operation one computer and the shared disk is configured to perform the computational functions of the Data Management Element; the other two computers are configured to perform the on-line and off-line computational functions of the Operations Control Center.

The advantages of this configuration are:

- minimum manual data transfer between the Operations Control Center and the the Data Management Element through the use of a shared disk

. true multi-vehicle support

. full backup mode in the event of failure in one of the OCC computer systems

In addition, through the use of (optional) additional switching equipment, the combined computational subsystem could be configured for utilizing one of the OCC computers for backup mode for the DME in the event of DME computer system failure. A reduced initial configuration may be used to help reduce initial program costs until the second satellite is to be supported.

4.2.1 FUNCTIONAL REQUIREMENTS

The major inputs to the Operations Control Center will consist of the following:

a) Spacecraft telemetry data (including DCS) via the Spaceflight Tracking and Data Network (STDN).

b) System Scheduler outputs from the Data Management Element (DME) describing a time sequence of all payload activities.

c) Ground control point information, calibration data, and predicted video data from the DME formatted for transmission to the spacecraft for inclusion in the video data.

d) Voice and teletype communication from network stations.

e) Orbital data including predicted station contact profiles and predicted spacecraft antenna contact profiles from the Orbit Determination Group via the DME.

Using the above inputs, the OCC will provide the following major outputs:

a) Commands for controlling the spacecrafts via STDN.

b) Ground point, ephemeris, calibration, predicted video, and other auxiliary data to be transmitted to the spacecrafts via STDN.

c) Spacecraft performance and coverage data to the DME.

d) Spacecraft and ground station configuration and status information to the DME as input for the System Scheduler.

e) DCS data to be used by the DME in generating DCS products.

f) Spacecraft acquisition data to the Low Cost Readout Stations and International Stations.

The Operations Control Center activities will be comprised of the following six major functions:

a) Spacecraft command and control.

b) Spacecraft telemetry retrieval and processing.

c) Determination of spacecraft health and status.

d) System activity planning and command generation.

e) Remote station contact scheduling.

f) Generation of displays and reports.

These major functions are described in the following paragraphs.

Spacecraft Command and Control

This function provides the spacecraft managers with the methods to control and manage the spacecrafts effectively and efficiently. The managers will utilize the data processing equipment and other associated hardware to:

- specify commands
- uplink and verify commands
- receive and process downlink telemetry for realtime display
- check and/or modify memory contents of the on-board processor
- perform functions necessary to ensure satisfactory spacecraft and subsystem performance

Telemetry Retrieval and Processing

After telemetry data is received it will be transmitted by NASCOM to the OCC via a communications modem. This communications modem will interface with the Signal Conditioning and Switching Unit (SCASU) of the Communications and Data Distribution Subsystem.

The telemetry data streams (realtime or recorded playback) will be output from the SCASU through the computer interface to the OCC computers which will process the data for output to various computer peripherals. Data will be stored on a disc, output to a plotter interface for plotting, and distributed to the Status Control and Display Subsystem interface.

The disc storage will be used as an input/output medium to the OCC computers and will provide inputs to the DME for further data processing and distribution.

Processed data flow to the Status Control and Display interface will be maintained for distribution to the various OCC CRT display units. These CRT display units will have the capability of multi-page call-up to provide access to all telemetry data functions for spacecraft and payload status evaluation.

Spacecraft Health and Status.

Telemetry data received from the spacecraft will be processed during each station pass in realtime and near realtime to provide "quick-look" displays of spacecraft health and status. Additional on-line and off-line processing will be performed post-pass to provide in-depth analyses of spacecraft health, performance and trends.

System Activity Planning and Command Generation

The OCC will perform the system activity planning requirements and command generation necessary to fulfill the overall mission. Instrument and communication equipment scheduling and antenna pointing are the major functions. Antenna pointing commands are required for the two X-band antennas to transmit data to the three EOS Prime Stations and various International Stations and for the Ku and S-band TDRS antenna to the TDRS spacecraft. The TDRS single-access Ku and S-band pointable antenna or multi access S-band array antenna must also be commanded to the EOS spacecraft.

The OCC will be responsible for accepting from the Orbit Determination Group, via the DME, predicted antenna contact profiles and converting and formatting this data into stored commands for control of the spacecraft antennas. The Orbit Determination Group will also provide the TDRSS with information necessary for it to control the TDRS antennas during the predicted contact periods with the EOS spacecraft.

The spacecraft command generation software will utilize scheduling information from the DME to generate both realtime and stored command sequences that satisfy the requested mission for upcoming orbits. The capability of the software to accept updates

and insertions for inclusion into the sequences will allow project management to make mission changes as required.

The OCC will generate the commands necessary to operate the spacecraft as follows:

- Compile commands which satisfy the system activity plan within spacecraft system performance and configuration constraints.
- Display and verify commands before transmission to ensure that the command list is correct and does not violate prescribed operational procedures.
- Block and format commands and transmit via the appropriate support network.
- Verify command execution in the spacecraft for both realtime and stored commands.

Remote Station Contact Scheduling

This function involves the scheduling and control of the remote stations during each spacecraft pass. These activities will be performed prior to and during the pass through communication from the operations supervisor who established the data link setup to and from the OCC. Included in this function are remote station instructions for video data dissemination.

Displays and Reports.

The OCC computers will generate detailed displays and reports which provide clear and precise information on the status of the spacecraft. Quick-look and overall status data will be displayed on the CRT's of the operations consoles. Results of detailed post-pass analyses will be output as in-depth printer-generated reports. An X-Y plotter will be utilized for long-term spacecraft subsystem performance trend analysis.

OCC Interfaces

The major Operations Control Center interfaces are with the Data Management Element of the Central Data Processing Facility, with the NASA Communications Network (NASCOM) of the Spaceflight Tracking and Data Network (STDN) and with the Low Cost Readout Stations and International Stations. These interfaces are delineated below:

a) DME to OCC Interface. The primary DME interface with the OCC is via a shared random-access mass-storage device. Through this interface the DME will supply the OCC, with a feasible payload scheduling profile and associated orbital data. This will be generated for each pass by the DME "Sensor Scheduling File". In addition, the DME will supply instrument data processing information (geometric, radiometric and Ground Control Point data) from the DME "GCP Data File" for transmission to the spacecraft.

The OCC provides to the DME, via the shared random-access mass-storage device, actual spacecraft and sensor performance data, derived from the telemetry processed by the OCC. It is stored in the OCC created "S/C Performance Data File". Included in this file will be spacecraft and ground station configuration and status for use by the DME System Scheduling function. In addition, the OCC will provide the DME with processed DCS data via the OCC-created "DCS Data File" for later use in the generation of DCS products.

b) OCC to NASCOM Interface. The NASA Communications Network (NASCOM) provides the communications facilities for handling EOS command, telemetry, and DCS data flow between the OCC and all remote stations. All high speed data containing NASCOM block headers will be routed through the GSFC 494 Communications Processor (CP).

The three primary remote stations within the Ground Site subnet used to support the EOS mission will be Alaska, Goldstone, and NTTF. Each of these sites has X-band and S-band capability for handling both payload and TT&C data. In addition, Merritt Island, Rosman, Madrid, and Orroral provide backup support capability for the EOS mission. These sites have S-band capability for handling TT&C data only.

c) OCC to Low Cost Readout Station Interface. The OCC will provide the Low Cost Readout Stations with spacecraft acquisition data (predicted spacecraft acquisition time and position and period of transmission over the requested area). In addition the OCC will verify the instrument and instrument mode of operation to be utilized during that particular pass.

d) OCC to International Readout Station Interface. The OCC interface with the International Readout Station is identical to c) above with the exception that the instrument mode of operation is standard and need not be specified.

The EOS mission operations support provided by the Tracking and Data Relay Satellite system (TDRSS) subnet also interfaces with NASCOM in a similar fashion. In the TDRSS single-access mode, the TDRSS will provide Ku-band/S-band or just S-band capability for handling payload/TT&C data, or only TT&C data respectively. In the TDRS multi-access mode, the TDRSS will either provide S-band capability for realtime commanding (at reduced rates) and realtime monitoring through the TDRS antenna located on the spacecraft, or S-band capability for backup commands through the S-band omni-directional antenna on the spacecraft. In all modes of operation utilizing the TDRSS subnet it will be necessary to provide the TDRSS ground terminal with TDRS contact position and contact time information for transmission between the TDRS and EOS Satellites.

In future missions the EOS OCC will also interface with the Space Shuttle through NASCOM during EOS Spacecraft operations. The Shuttle Avionics System is designed to accept EOS Spacecraft operational data through a hardware interface for realtime and/or dump transmission to the ground. The data will be interleaved with the Space Shuttle telemetry and transmitted directly to the ground site subnet via an S-band direct PCM link or via the TDRSS single-access mode. In either case, EOS data can be separated out at the ground site subnet or at the TDRSS ground terminal and transmitted to the OCC for processing and support of Spacecraft-Space Shuttle activities. All commands sent to the EOS Spacecraft during these activities will be sent via the Space Shuttle OCC located at JSC.

4.2.2 BASELINE DESCRIPTION

The Operations Control Center consists of three hardware subsystems and five software subsystems. The three hardware subsystems are:

a) Communications and Data Distribution Subsystem

b) Computing Services Subsystem

c) Status Control and Display Subsystem.

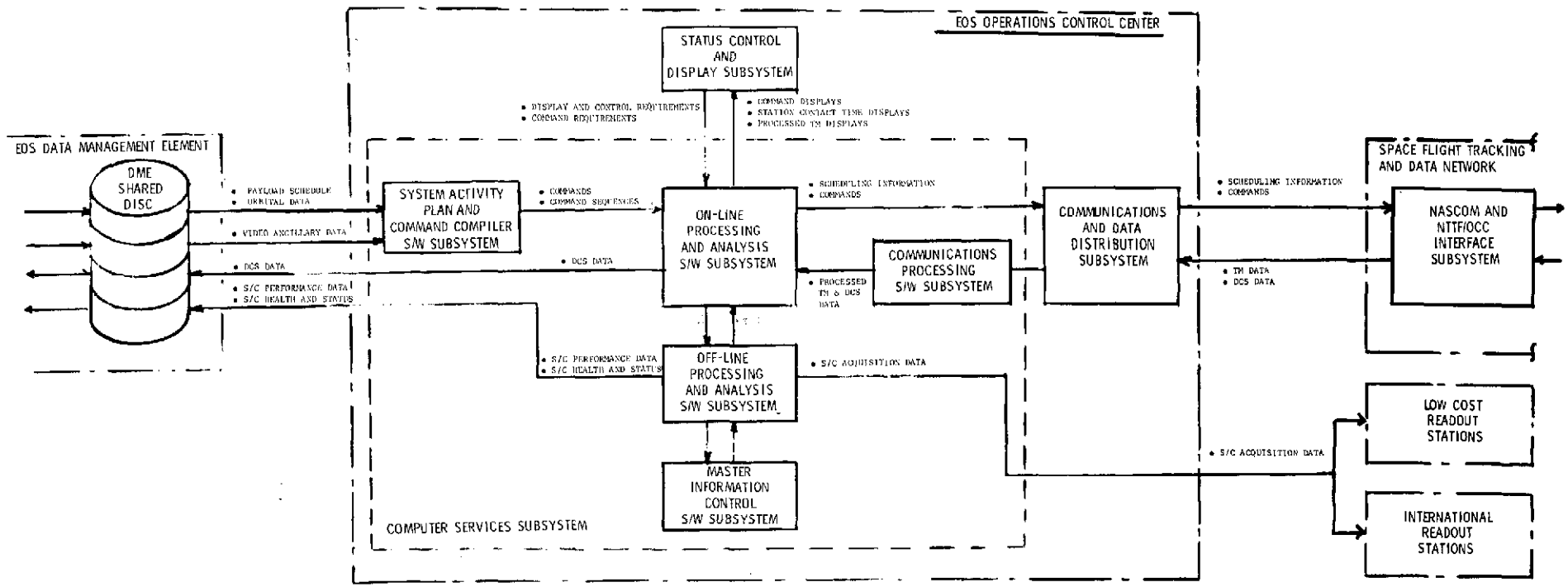

Figure 4.2-1. Operations Control Center Functional Block Diagram

The five software subsystems are:

a) Communications Processing Subsystem

b) On-Line Processing and Analysis Subsystem

c) Off-Line Processing and Analysis Subsystem

d) System Activity Plan and Command Compiler Subsystem

e) Master Information Control Subsystem

An overview of the Operations Control Center system and its interfaces is shown in Figure 4.2-1.

4.2.2.1 OCC Hardware Description

A block diagram of the OCC hardware subsystem and the major units within each subsystem is shown in Figure 4.2-2. The functions and descriptions of each OCC hardware subsystem and its major units are delineated in the following paragraphs.

COMMUNICATIONS AND DATA DISTRIBUTION SUBSYSTEM.

The Communications and Data Distribution Subsystem will provide the external interface functions for transfer of telemetry, command, and processing control information between the OCC and the remote stations, and internal interface functions for data and control signal transfer between the Computing Services Subsystem and the Status Control and Display Subsystem. The Communications and Data Distribution Subsystem will consist of:

a) Signal Conditioning and Switching Unit

b) Computer Interface Equipment Unit

c) Magnetic Tape Recording Units

d) Maintenance and Operation Console

Signal Conditioning and Switching Unit (SCASU) The SCASU will provide the interface with network communication equipment for both downlink data and timing signals and uplink commands. Downlink data can be applied to the SCASU from type 303-C wideband data modems. The SCASU will also have provisions for accepting and processing data from the NTFF via hard wire and from the Alaska X144 wideband data modem. Inputs to the SCASU will be routed through signal conditioning circuits so that all have known characteristics.

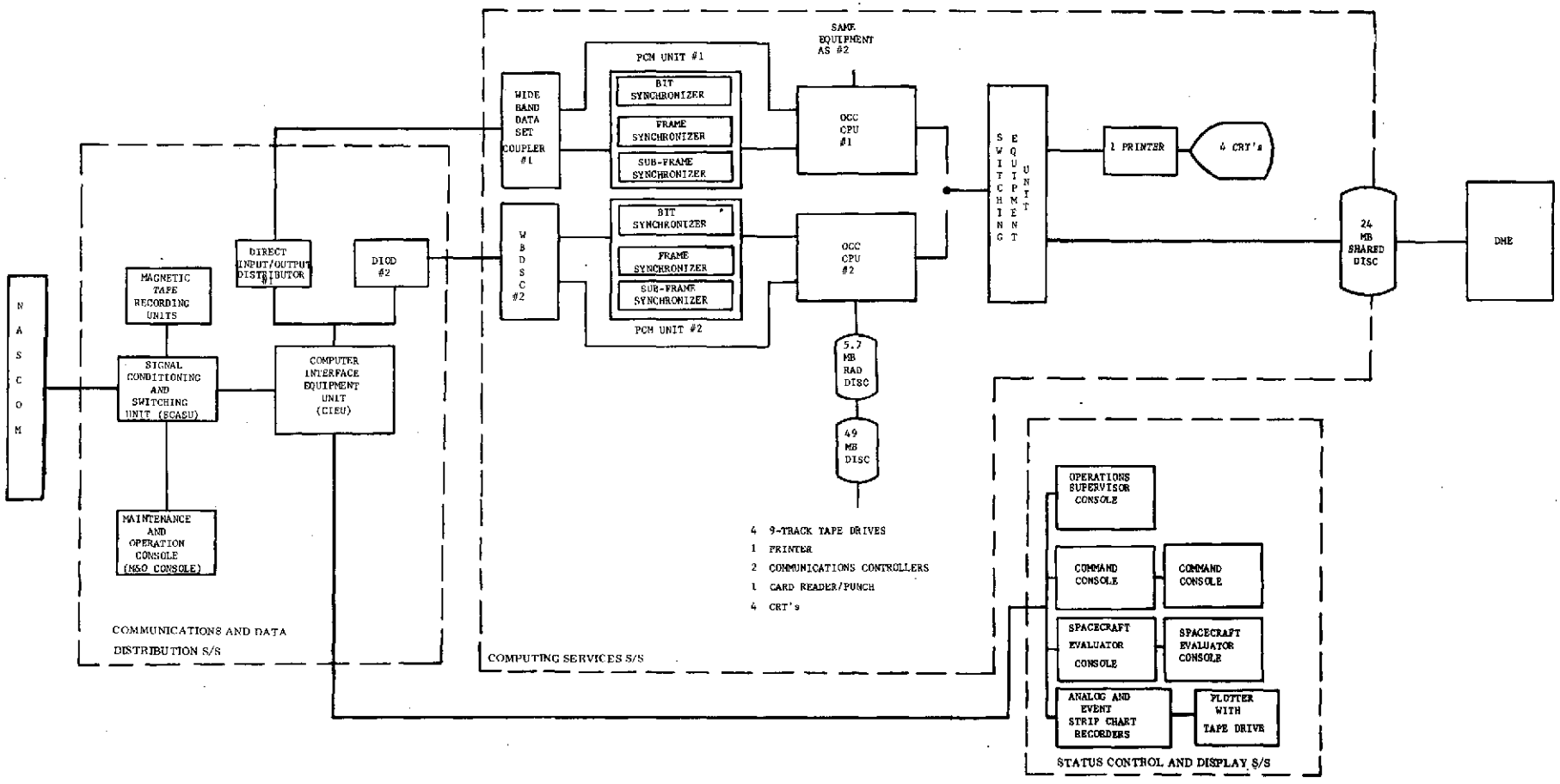

Figure 4.2-2. Operations Control Center Hardware System Block Diagram

The SCASU will output NASCOM-blocked PCM telemetry, DCS, and processing control message data to the OCC computers via the Wide Band Data Set Coupler (WBDSC). All PCM telemetry received in the original spacecraft format will be output to the OCC computers via bit, subframe, and frame synchronizers.

Commands and processing control messages output by the OCC computers in NASCOM-blocked format will be routed by the SCASU to the type 303-C modems for transmission to the remote stations.

The SCASU will also include a PCM Data Simulator that, in conjunction with the computer equipment, will facilitate data simulation for OCC test operations.

In addition to the configuration patching facilities, a scope patch panel will permit selected signals to be routed to the Maintenance and Operation Console for oscilloscope display, and a magnetic tape unit patch panel will enable selection of various data channels for recording and playback.

Computer Interface Equipment Unit (CIEU) The CIEU will contain the digital logic circuits and associated power supplies used to perform two major functions within the OCC. A portion of the logic will provide a two-way interface between the two OCC computers and the other OCC equipment. The remainder of the logic will be devoted to generating and processing timing signals used throughout the OCC in satellite data evaluation and correlation, and developing time codes used to drive digital time displays located on OCC consoles.

The CIEU will also contain a Direct Input/Output Distributor (DIOD) for each of the two OCC computers. The DIOD will provide a direct I/O link to the computer for operator-initiated commands. Data for display on the consoles will also be routed from the computer through the DIOD.

Magnetic Tape Recording Units (MTU's) Analog magnetic tape recording units will provide the OCC with data recording and playback capabilities. Input to each recorder channel and output from each playback channel will be routed through a patch panel to

provide flexibility. Each recorder channel will be monitored for signal quality. The MTU's will be remotely controlled from the Maintenance and Operation Console.

Maintenance and Operation (M&O) Console The M&O Console will provide the capability of monitoring and controlling the OCC equipment status and configuration. It will also provide capabilities for timing display, an alphanumeric data display, stripchart recorder control, and MTU control using tape search units.

COMPUTING SERVICES SUBSYSTEM

The Computing Services Subsystem will provide the communication, processing, and computational functions necessary for OCC mission operations.

Communication and Processing Equipment. "Front end" input/output hardware will consist of a Wide Band Data Set Coupler (WBDSC) and a PCM decommutation unit for each OCC computer. The WBDSC will provide a full-duplex interface between the OCC computers and NASCOM 303 modems via the Communications and Data Distribution Subsystem. These modems will interface with the NASCOM 494CP which will route data to and from the various network stations. The PCM decommutation hardware for each OCC computer will include a bit synchronizer, a frame synchronizer, and a sub-frame synchronizer.

Computational Equipment. The OCC computer configuration will consist of two identical systems each consisting of a medium-scale computer and associated standard peripherals. One system will be dedicated to support the on-line operations for both satellites and will have access to the Data Management Element Computer Services Subsystem through a shared disk. The other system will be dedicated to support the off-line analysis for both satellites. In addition switching equipment will be incorporated into the computer configuration to provide re-configuration backup capability in the event of failures to the CPU and/or major peripheral items. Switching equipment will also be incorporated into the computer configuration to provide a means of sharing common peripherals between each system.

Each computer system will contain a CPU characterized by a 6 us Load-Add-Store cycle time with 128 K core and 5.7 MB and 49 MB discs. The standard peripherals include four 9-track magnetic tape drives, a printer, a cardpunch, a card reader, four CRT's and two communication controllers. The shared peripherals include four CRT's and a printer.

STATUS CONTROL AND DISPLAY SUBSYSTEM

The status Control and Display Subsystem will provide spacecraft system and OCC system status data to OCC operations personnel. This subsystem will include the following equipment: an Operations Supervisor Console, Command Consoles, Spacecraft Evaluation Consoles and display equipment consisting of analog and event stripchart recorders, and a trend analysis plotter with tape drive.

Each console will be equiped with the following panels:

- time display
- spacecraft status display
- display select
- communications
- alphanumeric CRT with keyboard select switches
- stripchart recorder interface unit.

Operations Supervisor Console. The Operations Supervisor Console will provide for overall control and monitoring of EOS spacecraft performance and for monitoring of OCC configuration. This console will also contain a Command Panel, a Manual Pass-Time Set Panel, and an OCC Configuration Status Panel. The Manual Pass-Time Set Panel will allow the Operations Supervisor to override computer control of AOS and LOS time. The OCC Configuration Status Panel will provide the capability to monitor the configuration status of the OCC.

Command Consoles. The Command Consoles (one for each spacecraft in orbit) will provide the capabilities to initiate, control, monitor, and verify commands sent to the spacecraft. Facilities will be provided for setting up commands through the Command

Panel and entry through the OCC computer subsystem. Either this Command Panel or the Command Panel on the Operations Supervisor Console will be selectable. Either Command Console can be used as the Operations Supervisor Console in event of a failure of the Operations Supervisor's console.

Spacecraft Evaluation Consoles. The Spacecraft Evaluation Consoles will provide the spacecraft evaluators with the capability to analyze spacecraft and instrument performance, health and status. The Spacecraft Evaluation Consoles are capable of being switched on-line for real-time analysis support as well as being switched off-line for post-pass analysis and spacecraft status report preparation.

Display Equipment. The OCC will use both analog and event stripchart recorders. These recorders will be mobile and will be connected into the OCC system through the interface points on the consoles and the CIEU.

A trend analysis plotter with an incorporated tape drive unit will provide X-Y plotting capability for data and control inputs from either magnetic tape or paper tape. The plotter will be equipped with manual controls for selection of X-Y origin, scale factors, and plotter mode.

4.2.2.2 OCC Software Description.

A block diagram of the OCC software subsystems and software elements within each subsystem is shown in Figure 4.2-3. The functions and descriptions of the OCC software subsystems and major packages are delineated in the following paragraphs.

COMMUNICATIONS PROCESSING SUBSYSTEM (DECOM)

The Communications Processing Subsystem will accept and decommutate all spacecraft PCM telemetry and DCS data input to the OCC and will prepare it for further computer processing. This subsystem will also decommutate PCM data for stripchart display and provide the WBDSC interface for command and processing control message handling.

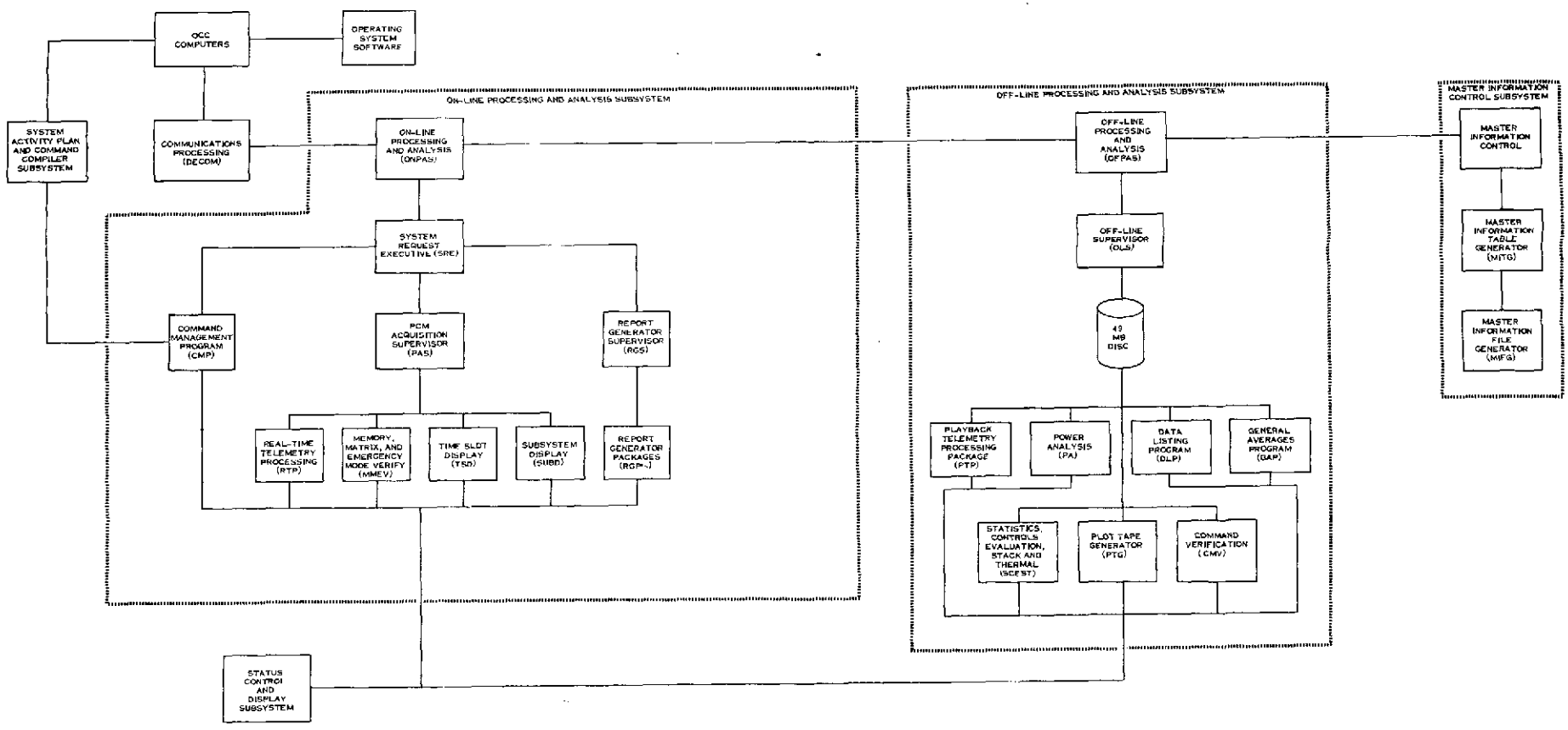

Figure 4.2-3. Operations Control Center Software System Block Diagram

The Communications Processing Subsystem will include the following features:

a) Synchronizes the data stream input via the WBDSC

b) Controls the PCM decommutation hardware to synchronize the spacecraft format bit stream input from the NTFF or X144.

c) Outputs to a maximum of 96 analog stripchart recorder channels

d) Outputs to a maximum of 84 digital stripchart recorder channels

e) Outputs telemetry to a Raw Data Tape (RDT)

f) Outputs vehicle time to a time code translator

g) Provides interfaces for commanding and command verification

h) Drives M&O Console status lights indicating quality and status of data.

i) Provides time smoothing and major frame number annotations for playback data.

j) Sorts DCS data blocks and outputs valid blocks to the shared disc for generation of DCS products by the DME.

ON-LINE PROCESSING AND ANALYSIS SUBSYSTEM (ONPAS)

The On-Line Processing and Analysis Subsystem will accept and process decommutated real-time data and perform frame-by-frame processing functions. This subsystem will also construct, transmit, and verify commands and command sequences, and receive and display reports concerning real-time PCM data.

The On-Line Processing and Analysis Subsystem will include the following software packages:

a) System Request Executive (SRE)

b) PCM Acquisition Supervisor (PAS)

c) Real-Time Telemetry Processing Package (RTP)

d) Subsystem Display (SUBD)

e) Time Slot Display (TSD)

f) Memory, Matrix, and Emergency Mode Verify (MMEV)

g) Report Generator Supervisor (RGS)

h) Report Generator Packages (RGP)

i) Command Management Program (CMP)

System Request Executive (SRE)

The SRE will accept parameter input from operations consoles or system input devices to alter the current mode of operation. It will communicate with PAS, RGS, DECOM, and the CMP to synchronize program execution. SRE features will include:

- Providing signals for external control of initiation, modification, and conclusion of PAS processing
- Accepting PCM data from DECOM
- Supplying a signal to PAS indicating availability of a major frame of PCM data for processing
- Interfacing with RGS and CMP via interrupt or event requests and signals.

PCM Acquisition Supervisor (PAS)

The PAS will provide the logical control of normal PCM data processing. Acting on interrupts from SRE, PAS will supervise real-time PCM data processing by:

- Operating on external requests transferred by SRE
- Accepting current GMT ground time
- Determining functions to be performed
- Calling and controlling RTP
- Automatically detecting all processor modes and calling MMEV
- Calling and controlling TSD
- Calling and controlling SUBD

Real-Time Telemetry Processing Package (RTP)

The RTP will perform the following processing operations in real-time for each frame of normal telemetry data:

- Reformat of the raw PCM matrix data
- Range-check of selected analog functions
- Determination of spacecraft event status
- Critical limits checking and alarming
- Command verification
- Calibration of selected analog functions
- Production of status reports and real-time subsystem reports

Subsystem Display (SUBD)

The SUBD will accept spacecraft telemetry data in raw telemetry matrix form, order the data by function number, convert to telemetry voltage levels or octal counts where applicable, and generate data displays to monitor functional subsystems performance.

Time-Slot Display (TSD)

The TSD will accept spacecraft telemetry data in real-time in raw matrix form and print the data in matrix format. The program will be primarily used during the early stages of spacecraft integration to verify correct telemetry interconnections. TSD will also be useful for trouble-shooting any processor or TFG sequencing anomalies and for validating performance of other programs.

Memory, Matrix, and Emergency Mode Verify (MMEV)

The MMEV will accept telemetry and processor memory dumps to produce reports for verification. It will identify discrepancies between actual memory contents and pre-defined memory data, and between the actual telemetry matrix and the expected matrix.

Report Generator Supervisor (RGS)

The RGS will supervise the presentation of displays by loading required Report Generator Packages (RGP's) and linking these packages to display devices.

Report Generator Packages (RGP's)

One RGP will be required for each report to be generated. Each RGP will contain all of the columnar heading and tabular information required to make the report meaningful, as well as the formatting and conversion statements used in displaying report data. Logic to perform page changing and display updating will also be incorporated in each RGP.

Command Management Program (CMP)

The CMP will provide for the creation, storage, retrieval, and transmission of all real-time commands and stored command sequences. It will operate in the ONPAS mode of the OCC system under the control of requests from the Command Console Operator.

The following list describes CMP features:

- Upon request, retrieves specified command sequences for transmission
- Examines retrieved sequence for "critical" commands
- Sets alarm display for "critical" commands
- Computes delta times for stored program commands in requested sequence
- Formats encoded commands for transmission
- Transfers unencoded commands to PCM processing system programs
- Capable of real-time transmission of stored sequences, real-time command CIEU commands, or processor memory re-program data upon console request.
- Capable of command or sequence transmission at pre-specified times
- Verifies COMSTOR command loading
- Accepts parameters and function key inputs from SRE
- Capable of transmitting a pre-defined sequence of sequences.

OFF-LINE PROCESSING AND ANALYSIS SUBSYSTEM (OFPAS)

The Off-Line Processing and Analysis Subsystem will contain the control, analysis, and ancillary software necessary to prepare and display spacecraft data in a meaningful format. In-depth analysis will be performed, and trend information will be provided.

The Off-Line Processing and Analysis Subsystem will include the following software packages:

1. Off-Line Supervisor (OLS)
2. Playback Telemetry Processing Package (PTP)
3. Power Analysis (PA)
4. Statistics, Controls, Evaluation, Stack and Thermal (SCEST)
5. Data Listing Program (DLP)
6. General Average Program (GAP)
7. Plot Tape Generator (PTG)
8. Command Verification (CMV)

Off-Line Supervisor (OLS)

The OLS will store real-time or playback PCM data from raw data tapes on the disc, and will control the sequence of activities to be performed on this data.

Playback Telemetry Processing Package (PTP)

The PTP will perform the following processing operations for each frame of normal playback data.

- Reformat
- Range check
- Event status determination
- Limit check and alarms
- Time smoothing
- Calibration (telemetry voltage or engineering units)
- Command verification
- Data smoothing
- Event smoothing

Power Analysis (PA)

The PA will generate the data necessary for evaluation and operational analysis of power subsystem performance. All calculations will be dependent on spacecraft day or night determination. Power Analysis will use data in segments created by mode changes. The combined data will form a power management orbit.

Statistics, Controls, Evaluation, Stack and Thermal (SCEST)

The SCEST will read the calibrated data records and use them to perform general statistics for all telemetry data. It will provide maximum, mean, and minimum values for each analog function. SCEST will also generate special reports for the Thermal and Control Subsystems.

Data Listing Program (DLP)

As a function of time, DLP will use the enhanced data file to list any spacecraft telemetry function. This program will be used to investigate spacecraft subsystems anomalies or to verify specific subsystem functions. DLP will also validate results of other programs.

General Averages Program (GAP)

The GAP will use the enhanced data file to present statistics on selected analog functions. This program will identify trends and provide information necessary to set reasonable limits on functions.

Plot Tape Generator (PTG)

The PTG program will contain the software necessary to process and format data for output to the plotter.

Command Verification (CMV)

The CMV will display initial status, orbital profile, and terminal status for spacecraft events. It will also perform Command and Mode Verification and Command and Mode Prediction.

SYSTEM ACTIVITY PLAN AND COMMAND COMPLIER SUBSYSTEM

The System Activity Plan and Command Complier Subsystem will generate an overall system activity plan based upon payload scheduling information provided by the DME, spacecraft and payload status and network availability and then translate the defined spacecraft events into command sequences that will cause those events to occur. It will operate only in a non-real-time environment and will contain no functions required during on-line data acquisition.

The System Activity Plan and Command Complier Subsystem will include the following features:

a) Accepts payload scheduling and ancillary video data, predicted station contact profiles, and predicted spacecraft antenna contact profiles from the DME

b) Generates spacecraft and network scheduling based on payload scheduling

c) Generates integrated payload, spacecraft, and network time-ordered activity events

d) Generates commands or command sequences required to perform activity plan events

e) Separates commands into real-time commands and stored commands

f) Compares time of requested activity with predicted orbital acquisition

g) Generates real-time commands for acquisition activities

h) Performs command list optimization process

MASTER INFORMATION CONTROL SUBSYSTEM

The Master Information Control Subsystem will provide the Master Information Files and Tables to be used by EOS application programs.

The Master Information Control Subsystem will consist of the Master Information File Generator (MIFG) and the Master Information Table Generator (MITG).

The MIFG will maintain a centralized set of files containing the source engineering data which provides the basis for generation of the Master Information Tables. It will operate only in the off-line environment. The number of files will be variable, and they will be maintained on disc storage and magnetic tape.

The MITG will generate a series of table to be used by programs operated within the OCC system. It will operate only in the off-line environment. The MITG will extract data from the Master Information File. Generated tables will be maintained in disc storage and magnetic tape.

4.2.2.3 Operations Control Center Personnel

The operations of the OCC will be the responsibility of the EOS Project Operations Director. The EOS Project Operations Director will look to the OCC Operations Manager, assigned by the Mission and Data Operations Director, for operations of the OCC who in turn may use a M&O contractor to manage and staff the center.

The OCC Staff will be divided into two major functions - flight operations and ground operations. The Flight Operations Staff will be responsible for mission planning and scheduling, spacecraft command generation, and performance evaluation. The Ground Operations Staff will be responsible for operations and maintance of the OCC equipment.

Figure 4.2-4 provides an organizational summary for the OCC and the identification of OCC personnel.

Flight Operations Staff

The Flight Operations Staff will consist of a Flight Operations Manager and secretary, four on-line operations teams and an off-line operations team. The on-line operations team will consist of an Operations Supervisor, two command operators (one per spacecraft), a spacecraft evaluator and a data analyst. The primary function of each on-line operations team will be the command, control and monitoring of the spacecraft, under the direction of the Operations Supervisor.

The off-line operations team consists of a flight operations engineer, three orbital operations engineers, an off-line evaluator, an operations scheduler and three programmer analysts. The flight operations engineer will provide overall systems knowlege of the spacecraft, OCC hardware and software, and systems interfaces. The orbital operations engineers and off-line evaluator will perform in-depth analyses of spacecraft and payload performance, investigation of any spacecraft anomalies, and the preparation of post-flight periodic reports. The operations scheduler will develop and issue activity plans which will guide the on-line operations personnel. The programmer analysts will be responsible for repairs and minor improvements to the OCC software as directed by NASA during the post-launch operations time period.

Ground Operations Staff

The Ground Operations Staff will consist of a Ground Operations Manager and a secretary, four on-line operations teams and an off-line operations team. The on-line operations team will consist of a ground equipment supervisor, two computer operators, two

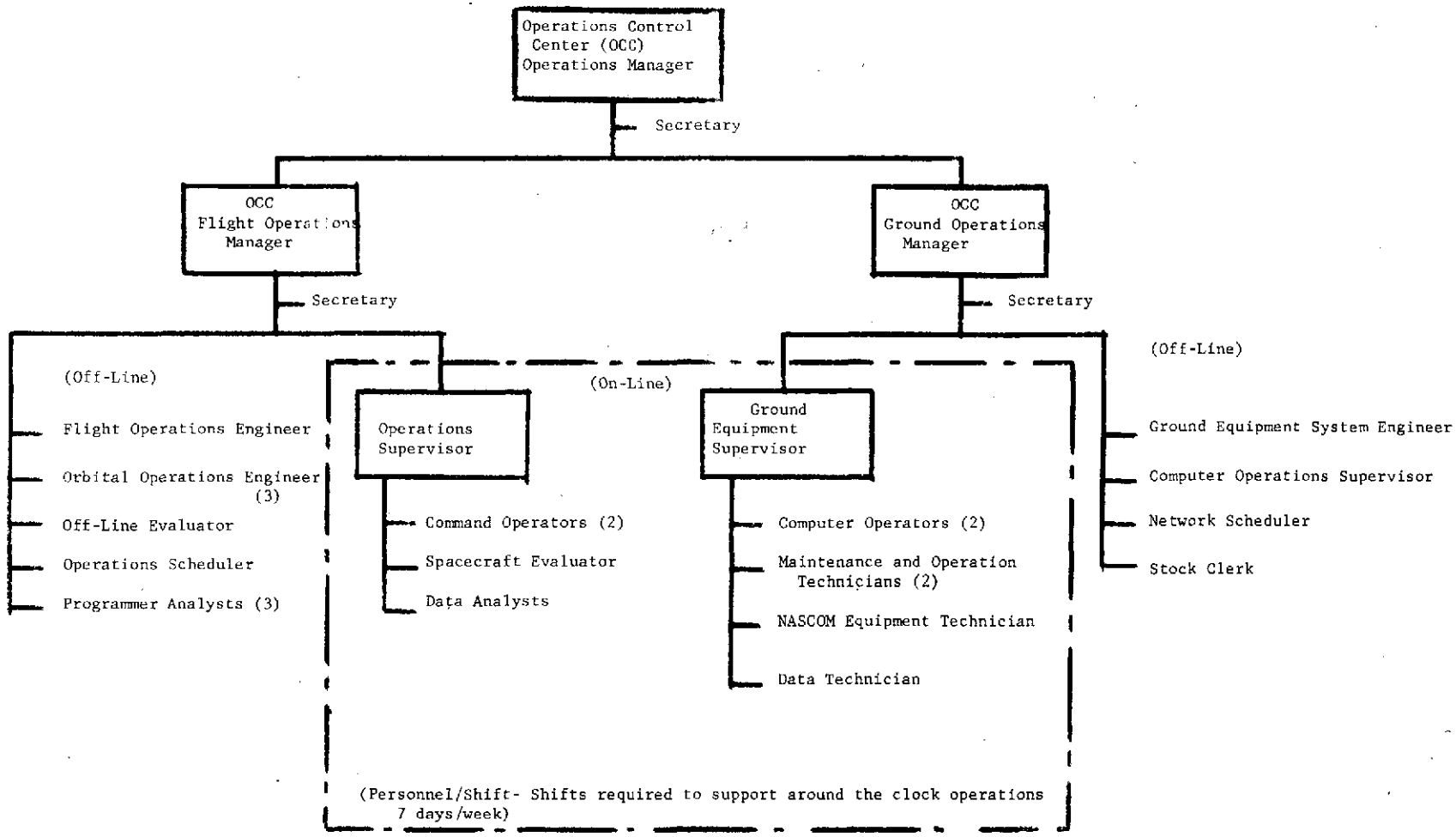

Figure 4.2-4. Operations Control Center Personnel Organization

maintenance and operations technicians, a NASCOM equipment technician, and a data technician. The primary function of each on-line operations team will be the maintenace and configuration of the OCC equipment under the direction of the ground equipment supervisor.

The off-line team will consist of a ground equipment systems engineer, a computer operations supervisor, a network scheduler, and a stock clerk. The ground equipment systems engineer will be responsible for all the OCC equipment, except computers, and all OCC interfaces; the computer operations supervisor is responsible for the operation and maintenance of the OCC computer systems; and the network scheduler will work with the operations scheduler and provide interface with the NASA Operation Control Center (NOCC). The stock clerk will be responsible for maintaining and controlling adequate spares and expendables for the support of OCC maintenance and operations.

4.2.2.4 Operations Control Center Facilities

The EOS OCC, it is assumed, will be located within Building 23 at the Goddard Space Flight Center (GSFC). Functionally the OCC will be divided into five separate areas. Each area, its functions, the personnel and equipment located within each area, as well as the interfaces with the other areas are delineated below:

a) Flight Operations On-Line Area. This area provides the focal point for the on-line command, control and monitoring of spacecraft orbital activities.

   This area will be manned around the clock by the on-line flight operation teams; each team will consist of an operations supervisor, two command operators, a spacecraft evaluator, and a data analyst. The area will contain the OCC Status Control and Display Subsystem equipment consisting of an operations supervisors console, two command consoles, two spacecraft evaluation consoles, supporting analog and event recorders and the trend analysis plotter and tape drive.

This area should be located adjacent to the DME Mission Planning Area for resolution of system scheduling conflicts and adjacent to the Flight Operations off-line evaluation area for on-line consultation regarding spacecraft performance data and anomalies.

b) Flight Operations Off-Line Area. This area will house the OCC Flight Operations Manager and secretary and the nine members of the off-line flight operations team. This area will be used to develop and issue activity plans for guidance to the on-line flight operations teams, to perform in-depth analysis of spacecraft performance, investigation of spacecraft anomalies identified by the on-line team, writing of periodic post-flight reports, and repairs and minor improvements to the OCC software.

This area should be located adjacent to the DME Mission Planning Area for mission planning support and resolution of mission planning conflicts; and adjacent to the Flight Operations On-Line Area for utilization of the Spacecraft evaluators consoles, supporting analog and event recorders and the trend analysis plotter to resolve spacecraft anomalies and generate data for the periodic post-flight reports.

c) Computer Area. This area will contain the computational equipment of the OCC and DME as well as the OCC Wide Band Data Set Couplers and PCM Decommutation Units. The area will also include a storage area for weekly supply of computer expendables as well as an area for use by the programmer analysts for generation of punch cards for software modifications. Space will be provided in this area for the two computer operators and data technician.

The Computer Area should be located in the vicinity of the Flight Operations On-Line Area and the OCC Communications and Data Distribution Equipment Area to minimize cable lengths and signal interfaces between the various OCC hardware subsystems.

d) OCC Communication and Distribution Equipment Area. This area will contain the OCC Communication and Data Distribution Equipment consisting of the signal conditioning and switching unit, computer interface equipment units, magnetic tape recording units and the maintenance and operation console as well as the NASCOM interface equipment. Space will be provided in this area for the ground equipment supervisor, who normally mans the maintenance and operations console, the maintenance and operations technicians, and the NASCOM equipment technician.

The OCC Communications and Distribution Equipment Area should be located in the vicinity of the On-Line Flight Operations Area and the Computer Area to minimize cable lengths and signal interfaces with the other OCC hardware subsystems.

e) Ground Equipment Off-Line Area. This area consits of an office to house the OCC Ground Operations Manager and secretary, and the off-line operations team personnel. This area also includes a stockroom for spares and expendables under the control of the Stock Clark as well as a maintenance and calibration area for selected second level maintenance activities and calibration activities.

The Ground Equipment Off-Line Area should be located in the vicinity of the other equipment areas to provide effective equipment support.

4.2.3 OPERATIONS

Effective operational support of the two EOS spacecraft requires performance of certain operations by the OCC prior to, during, and after each station pass. The operational timelines within which the OCC must function will be paced by the ground station contact schedules and the planned payload schedules provided by the DME.

A three-orbit segment of a typical daily OCC operations timeline is depicted in Figure 4.2-5.

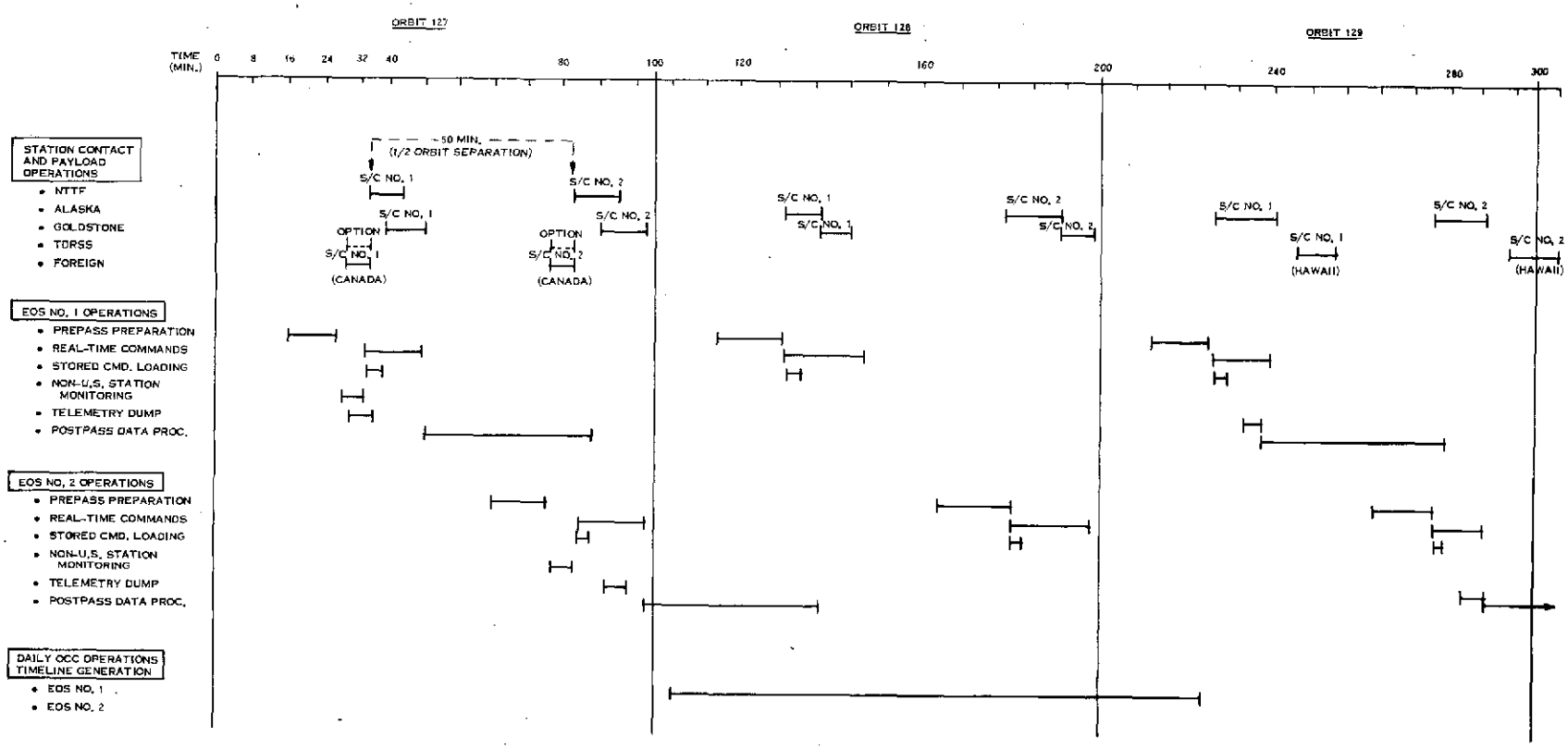

Figure 4.2-5. Typical Daily Operations Control Center Operations (3-Orbit Timeline Segment)

Upon receipt of the payload time-sequenced activities from the DME, the OCC System Activity Plan and Command Complier Subsystem will establish an integrated payload/spacecraft/network time-sequenced activities events list and then translate this information into optimized real-time and stored command sequences. This function will operate only in a non-real-time environment.

The Spaceflight Tracking and Relay Network (STDN) will be scheduled to support the upcoming pass, configured and verified. The Command Management Program Element of the On-Line Processign and Analysis Software will provide for the transmission of the real-time and stored command sequences under the control of the Command Console Operator. The associated instrument data processing information from the DME will also be formatted and transmitted to the spacecraft at this time.

Normally the Alaska and NTFF Stations will be used for the transmission of stored commands and data although this capability exists from all ground-site subnet stations and the TDRSS subnet. Once the stored commands have been verified by the OCC through an on-board computer dump, they will be enabled by the OCC and will effect the desired activities throughout the orbit(s).

During real-time contact with the spacecraft, real-time telemetry will be acquired by STDN for processing. The Communications Processing Software Subsystem will accept, decommutate and record all spacecraft PCM telemetry data and will prepare it for further processing by the Real-Time Telemetry Processing Package Software Element. The Subsystem Display Software Element within the On-line Processing and Analysis Subsystem will also be used for console operator real-time evaluation of spacecraft performance. The DCS data will be stripped from the real-time telemetry data and processed by the Communication Processing Subsystem. The valid output data blocks will wither be recorded on a magnetic tape for processing by the DME at a later time or be directly transferred to the DME via the shared disk by the "DCS Data File" generated by the OCC.

The spacecraft telemetry data on the spacecraft narrow band recorder (recorded when not in real-time contact with the ground-site subnet) will be dumped normally during the Alaska and NTTF station contacts with the spacecraft. The telemetry dump data at the NTTF station will be directly fed to the OCC over existing hardwire lines for processing by the OCC; the telemetry dump data at the Alaska station will be transferred directly to the OCC via NASCOM in real-time, or can be recorded and played back after the station pass. The telemetry dump data is handled in a similar manner to the real-time telemetry described above, using the playback telemetry processing package of the Off-Line Processing and Analysis Software Subsystem.

Upon completion of the pass, the Off-Line Processing and Analysis Software Subsystem will prepare and display spacecraft data in the form of printer-generated reports for in-depth analysis. Trend information data will be generated, stored, and presented on a X-Y recorder under the control of the Spacecraft Evaluator. In addition a "S/C Perform Performance Data File" will be created and forwarded to the DME via the shared disc for use in generating processing instructions to be sent to the IPE with the recorded video data. This file will also contain spacecraft and ground station configuration and status data required by the DME for generation of payload scheduling information for upcoming mission orbital operations.

4.3 CENTRAL DATA PROCESSING FACILITY

This section contains a detailed description of the baseline requirements and system design of the Central Data Processing Facility (CDPF) for the EOS-B mission. The purpose of the CDPF is to process and store large quantities of EOS payload data and disseminate this data to designated users in the form of digital tapes, film imagery, and, for DCS data, computer cards or listings.

4.3.1 BASELINE DEFINITION

To accomplish the functions and meet the requirements discussed in this section, the Central Data Processing Facility has been designed to include two major elements - the Image Processing Element (IPE) and the Data Management Element (DME).

Figure 4.3-1 illustrates the flow of data through the CDPF and its relationship to the various other subsystems in the EOS system.

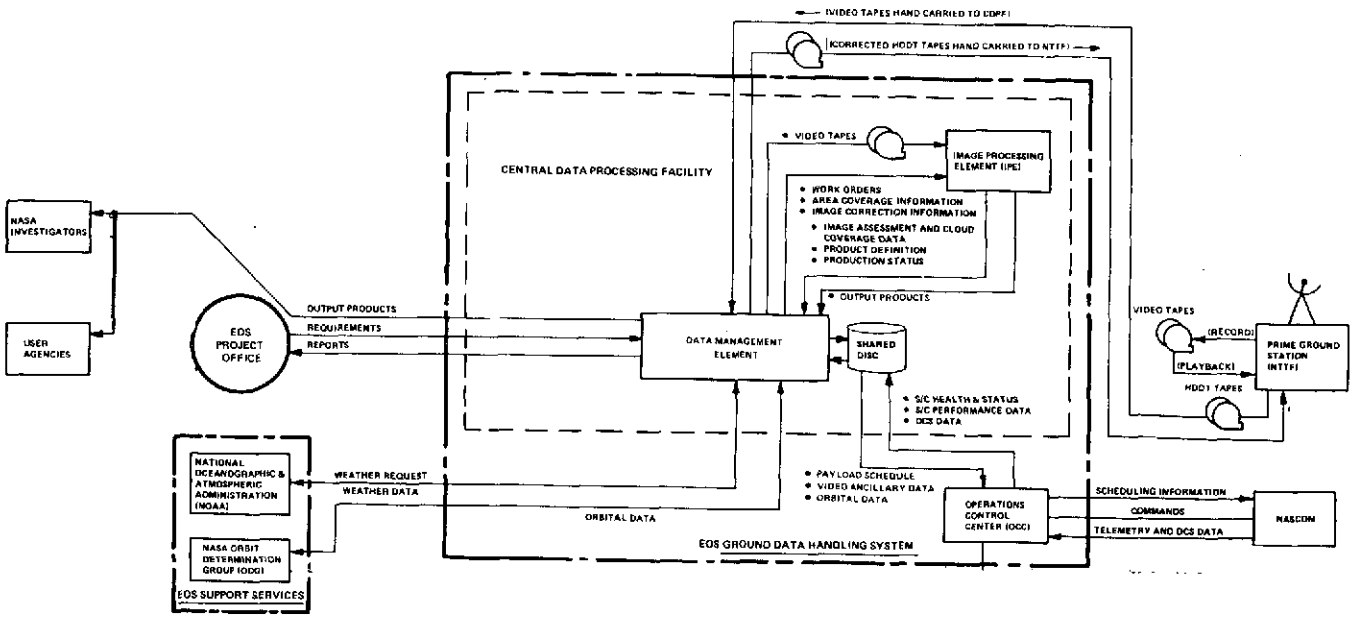

Figure 4.3-1. Central Data Processing Facility

The Image Processing Element provides the capability to process incoming payload data tapes from both the Thematic Mapper (TM) and High Resolution Pointable Imager (HRPI) instruments. The pixel processing consists of radiometric and geometric corrections as well as extractive processing. The output products produced by the IPE are in the form of high density digital tapes, computer compatible tapes, film and prints.

The Data Management Element serves as the centralized control of the entire Ground Data Handling System in terms of payload scheduling, internal production control data distribution, and data base management.

The DME also provides the CDPF processing and dissemination capability for DCS data. In addition, it provides the EOS system interface with the data users and outside sources of auxiliary data such as the National Oceanographic and Atmospheric Administration (for weather predictions) and the NASA Orbit Determination Group (for predicted and/or best fit ephemeris).

4.3.1.1 General Requirements

The Central Data Processing Facility will perform those functions necessary to satisfactorily complete the following major areas of responsibility:

- Perform radiometric and geometric correction of all instrument data
- Produce and distribute output products (HDDT's, CCT's, film, prints, computer printouts)
- Process and disseminate DCS data
- Maintain centralized image data base
- Provide external interface for GDHS (i.g., users, NOAA, ODG)
- Develop instrument scheduling requirements
- Provide accounting and reporting support for EOS project management

The major inputs to the Central Data Processing Facility include:

- Payload data tapes from NASCOM/NETWORKS
- Selected telemetry data from the OCC
- Requirements from EOS data users
- Weather data from NOAA
- Ephemeris data from ODG
- Data Collection System data from OCC

The major outputs of the Central Data Processing Facility include:

- Auxiliary data to OCC (for eventual insertion into video data stream)
- Payload scheduling requirements to OCC
- Output products to users (both DCS and image data)
- Management and accounting reports to EOS Project Office and users
- Data base information to users upon request

4.3.1.2 Functional Requirements

The description of the functional requirements for the CDPF are broken down and discussed independently for the IPE and DME.

4.3.1.2.1 Image Processing Element Functional Requirements

All processing and correction of the data will be accomplished in the digital domain to achieve the desired output product accuracy requirement and to satisfy the needs of the user community that performs digital extractive processing to derive information from the data. The system level error allocations define the characteristics of the input data while the system performance requirements define the quality of the output products. These two sets of requirements plus those discussed in the CDPF Specification (Report #5 - Volume #6) provide the specifications for the performance of the Image Processing Element.

Quality Assessment. An assessment of the received data is necessary to identify regions of valid data and determining characteristics for data cataloging and future processing scheduling. Parameters to be determined include data quality li.e., bit error rate), cloud cover and failed detectors related to tape area.

Reformatting. A reformatting function must be performed to conpensate for the multiplexing strategies and various sensor configurations which produce a serial data stream that has non-optimum pixel arrangements. For example, the output format must be band-to-band registered, spectrally interleaved, and linearized (all pixels along a straight line in sequence). The baseline input data formats used during the study are those of the Highes object plane scanning Thematic Mapper and the Westinghouse staggered array HRPI.

Radiometric Correction. All data, regardless of the geometric accuracy, will be corrected to the same level of radiometric accuracy. EOS requirements on the output product radiometric accuracy are not major cost drivers in the Central Data Processing Element. The approach is to have all information necessary to calculate this correction

included in the data stream. This data is:

- o Internal calibration lamp data which is utilized to remove detector banding and short term instability,
  - Thematic Mapper
    - o Gain and offset correction is sufficient
    - o Calibration table for each detector
  - HRPI
    - o Detectors have linear response
    - o Gain and offset correction is sufficient
    - o 256 calibration tables for 19,200 detectors
- o Sun calibration data provided to remove long term instabilities, and
- o Failed detector compensation required.

Geometric Correction. A major cost driver in the Digital Image Correction Subsystem is the stringent geometric accuracy requirement. All data will be corrected to a geometric accuracy in one of the following categories:

- o Uncorrected data - 450 meter accuracy
  - Utilizes predicted ephemeris
  - Performs X correction of each scan line (line length, earth rotation, scanning/sampling/array non-linearities, earth curvature and best fit planar projection)
  - All data linearized to straight lines
- o Uncorrected data - 170 meter accuracy
  - Utilizes best fit ephemeris
  - Performs X correction of each scan line (same as uncorrected data - 450 meter accuracy)
  - All data linearized to straight lines
- o Corrected data - 15 meter accuracy
  - Utilizes best fit or predicted ephemeris
  - Performs X, Y correction of all error sources
  - Uses Ground Control Points (GCP's) to model errors
  - Data presented in specified map projection
  - Data gridded with respect to the earth

Due to the uncertainty in the user community as to the desirability of one resampling technique as opposed to another, the IPE is specified to have the resampling capabilities for nearest neighbor, bilinear and $\frac{\text{Sin } x}{x}$ (cubic approximation). The baseline system is designed for 100% data throughput with the cubic approximation of $\frac{\text{Sin } x}{x}$.

HDDT Generation. The digital Image Correction Subsystem will produce resampled and non-resampled HDDT's of the data received. The resampled HDDT will be copied and shipped to major data users and be utilized for archiving. The non-resampled HDDT is to be archived along with the derived correction information data and utilized in custom processing functions.

Computer Compatible Tape Generation. The purpose of this function is to produce computer compatible tapes from HDDT's and perform custom processing of the data. An illustrative list of available customer processing is provided below:

- Digital Enlargemnt
- MTF Compensation
- Resolution Reduction
- Area Reduction
- Custom Projection
- Pixel Reformatting

Film Image Generation and Processing. The system must have the capability to produce first generation B&W products and second generation color products. The options available for customer processing are the same as those listed for CCT generation with the addition of the following:

- Photographic Gamma Change
- False Color Mixes
- Photo Copying
- Photo Enlargement

The system will also have the capability to produce a film strip of a selected channel from each sensor of the data contained on all resampled HDDT's entered into the archive. The film strip will be copied and included with the shipment of the HDDT's to major users and used for catalog purposes in the archive.

Browse Access. The system will provide a capability for investigators to access and view the archived digital data. Since the primary storage medium is the HDDT, this function will provide a video display capability; this function also will provide the capability of viewing the catalog film identified above.

Extractive Processing. An extractive processing option is to be provided which is capable of converting corrected EOS multispectral image data into user-oriented parametric information such as the identification and classification of agricultural crops, urban areas, etc. The implementation system will be interactive and have the capability of performing the following functions:

- Feature Selection/Extraction: obtaining the features or characteristics of the scene which can be used to identify points or objects in the scene.
- Feature Reduction: a linear transformation of the features obtained above to gain a minimum optimal set of features which will be sufficient to identify objects or points in a scene.
- Feature Classification/Estimation: the conversion of feature measurements into user oriented parameters (i.e., corn yield, soil moisture, etc.).

4.3.1.2.2 Data Management Element Functional Requirements

The DME serves as the single centralized control element of the ground system. The DME provides the interface with the two other functional elements of the Ground Data Handling system (OCC and IPE) as well as with the user community and EOS project management. It will consist of a single integrated hardware/software system to perform all of the functions associated with the following major responsibilities:

- Control user community interface
- Direct sensor scheduling
- Direct on and off-line activities of the IPE
- Provide accounting and reporting to facility management
- Maintain image and production data base
- Dissemination of data products.

User Community Interface. The DME will control the interface between the various elements of the user community and the EOS system. The DME will accept the reply to queries concerning the data base contents. These queries may be from interactive terminals in the Browse Processing area or input by punched cards from mail and telephone queries. The DME will also accept and respond to requests for various products

C-5

relating to EOS imagery. The images may be already available or may be an implicit request for production of the image by spacecraft and sensor scheduling.

Direct Sensor Scheduling. When a valid request for EOS imagery is received, but for which the required imagery is not available, the DME will provide information to the OCC to command the spacecraft and sensors to provide the imagery. The information to the OCC will consist of a feasible time-scheduling of the sensors. It will include ground control point data as well as other correction data (e.g., sun calibration information, alignment biases, timing updates, etc.) which will be relayed to the spacecraft. This data will be stored and retransmitted by the spacecraft with the imagery video data stream. The sensor scheduling by the DME will take into account the priority of the users who requested imagery, the predicted weather, predicted ephemeris, and spacecraft operational constraints.

Direct IPE On and Off-Line Activities. The DME will direct all phases of imagery and product processing from Video Tape Assessment to On and Off-line Film Product Processing. Where the particular activity is highly automated, such as in Pass 2 HDDT generation, the activity is controlled by direct computer to computer data transfer with hard copy reports of the progress of each activity. Manual over-ride may be exercised at any point to allow non-standard processing. If the activity involves human interface and/or manual operations, the DME will control the activity by the production of work-orders.

Management Reports and Accounting. The DME will provide periodic and special reports to the Facility management regarding the status and performance of the DME and the other associated functional elements. These reports may be keyed to periodic intervals, specific DME activities or in response to Facility management request.

Data Base Maintenance. The key to smooth and efficient operation of the ground station is the Integrated Product/Image Data Base (IPID). IPID is a large, multi-structural computerized data base designed for efficient storage, alteration and

retrieval of data concerning images and products. The DME is responsible for the creation, maintenance and integrity of IPID. The Data Base consists of a hierarchy of storage media: on-line random access storage for most recent data; on-line sequential access for older data; off-line sequential access for all archival data base.

The DME will also provide reports describing the statistical aspects of data base utilization. This will provide insight into alternate, more efficient data structures as the DME matures.

The DME and IPID will be structured to provide information storage and retrieval to the level of individual images and/or work orders via any of the following chains:

- o Work Orders
  - Work Order Number
  - Generating User Request
  - Production Status
  - Referencing Image
  - Product Type
  - Work Station
- o Images
  - Scene
  - HDDT
  - Catalog Film Roll
  - Pending Request

4.3.1.3 Interface Definition

All interfaces between the Central Data Processing Facility and other sections of the Ground Data Handling System, elements of the EOS system and the external world (e.g., users) are handled by the DME. Table 4.3-1 provides a summary of these interfaces.

4.3.2 BASELINE DESCRIPTION

During the EOS cost tradeoff study phase, several CDPF system level design and implementation approaches were developed and evaluated. It was found that the high

Table 4.3-1. CDPF Interfaces

Interface	Inputs to CDPF	Outputs from CDPF
OCC	o Spacecraft and sensor status o Spacecraft and sensor performance o DCS data.	o Payload schedule o Image processing data for retransmission by spacecraft
User Community	o Data base queries o Image requests	o Data base contents report o Output products
EOS Project Management	o Non-standard processing direction o User definition o Status requests	o Periodic status and performance reports o Special reports
NASCOM/ NETWORKS	o Payload video tapes	o Tracking and data collection requirements
NOAA	o Weather condition predictions	o Requests for weather predictions
ODG	o Orbital data - Predicted - Best fit	o Requests for ephemeris data

TM and HRPI throughput and the stringent system geometric accuracy requirements were the major cost drivers. Also, optimization of information flow within the CDPF was found to provide a significant reduction in the initial cost of system hardware and receiving operations costs (personnel, etc.) to meet these requirements. The following sections contain a detailed description of the Image Processing Element and the Data Management Element which meet the CDPF requirements previously discussed.

Detailed cost/performance tradeoff studies were performed between three hardware implementation approaches for the Image Processing Element since it represents the most significant technological challenge in the CDPF. These approaches, categorized based on pixel processing hardware configuration, are:

- o General purpose computer
- o Special purpose hardware
- o Microprogrammable processor

The results of the cost tradeoffs show the CP computer approach to be unfeasible due to high costs and system complexity (multiple computers) for the throughputs and corrections required for EOS. Both the special purpose hardware and micro-programmable processor approaches represent viable candidates. The special purpose hardware approach provides the minimum cost system but is the least flexible in accommodating changes in instrument characteristics, input data formats, and CDPF functional requirements and specifications. The micro-programmable processor has a flexibility capability between the special hardware and general purpose approaches, but is significantly higher in cost than the special hardware approach for the baseline set of EOS-B requirements. However, because of the uncertainty in instrument development on EOS-A, B and follow-on missions, both candidate approaches are discussed in Section 4.3.2.1.

4.3.2.1 Image Processing Element

In order to satisfy the Image Processing Element requirements and functions, the design concept illustrated in Figure 4.3-2 has been selected as the baseline. The design concept is configured for standard on-line processing functions and custom off-line processing functions. The preprocessing and image correction functions (consisting of data reformatting, quality assessment, radiometric and geometric correction, and initial resampled and non-resampled HDDT generation) are performed on all valid data and are considered as standard on-line processing functions. The remaining functions are considered as custom off-line processing functions since they are performed only on selected data based upon user requests.

4.3.2.1.1 Standard On-Line Processing

The on-line portion of the Image Processing Element performs all radiometric and geometric correction functions required as standard in the initial processing of EOS data. These are performed based on ancillary data transmitted to the spacecraft for inclusion into the video data stream so that all required data is included on a single HDDT.

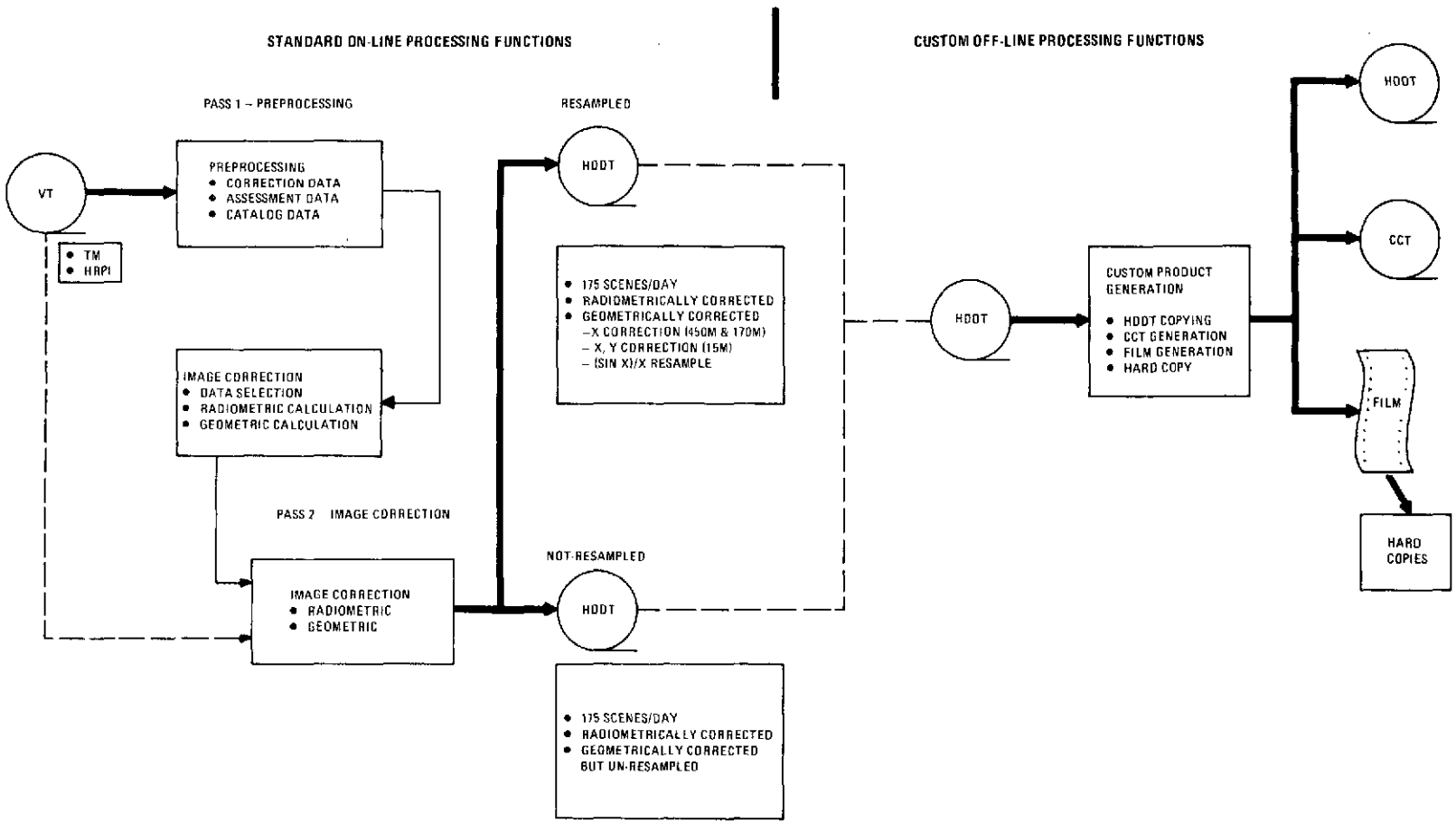

Figure 4.3-2. Image Processing Element Design Concept

The on-line portion of the IPE is a two pass system. During the first pass the raw data received from the spacecraft is evaluated for quality and cloud cover and descriptive catalog files are generated. Preliminary radiometric correction required to facilitate quality screening and evaluation of Ground Control Point (GCP) image data, such as the removal of banding, is also performed. In addition, correction data required for full radiometric and X and Y geometric corrections are generated.

Radiometric corrections and X and Y geometric corrections are performed on the data during the second pass. Outputs of the second pass are tapes containing radiometrically corrected resampled data, and radiometrically corrected non-resampled data with the geometric correction information included. In the event that a nearest neighbor or bilinear resampling is required on a custom basis, a third pass will be made using the non-resampled tape to accomplish this. Table 4.3-2 describes the standard on-line processing functions.

Functional Description of On-Line Image Processing Element

Pass 1 - Preprocessing. The first pass through the data in the Digital Image Correction Subsystem is performed at approximately real-time data rates and is primarily for the purpose of screening the data and extracting all the necessary information to perform the radiometric and geometric correction.

A functional flow diagram of the first pass preprocessing function is shown in Figure 4.3-3. The data stripping and timing modules perform basic functions of stripping and buffering timing data, quality assessment indicators, calibration data, ground control point areas, and ancillary data which has been inserted into the video stream on the spacecraft. The ancillary data includes sun calibration data, predicted ephemeris, rate and position attitude data, timing updates, alignment information and assessment information.

This data is all that is necessary to radiometrically correct the data and to geometrically correct the data to 450 meter accuracy. The ancillary data,

Table 4.3-2. Standard On-Line Processing Functions

Input	Function	Throughput	Output Product
Video Tape (Pass 1)	Quality Assessment - Quality - Cloud Coverage Assessment - Area Specification - Failed Detector Identification	175 Scenes/Day	Quality Assessment Data to Data Services Element (DSE) for Work Order Generation and Cataloging
Video Tape (Pass 2)	Data Reformatting	175 Scenes/Day	HDDT's (Resampled) - Master to Archive for Later Use in Generation of Custom Products - Copies Produced Off-Line to Major Users HDDT's (Not Resampled) - Master to Archive for Later Use in Generation of Custom Products requiring different Re-sampling Techniques and/or Projections Film (Catalog) - Master to Archive for Later Use by the Browse Facility - Copies Produced Off-Line to Major Users
	Radiometric Correction	175 Scenes/Day	
	Geometric Correction		

Position Accuracy	Correction	Projection	Resampling	Throughput
450 M	X	Best Fit Planner	(Sin x)/x	135 Scenes/Day
170 M	X	Best Fit Planner	(Sin x)/x	135 Scenes/Day
15 M	X and Y	Oblique Mercator	(Sin x)/x	40 Scenes/Day (U. S. Data)
15 M	X and Y	Not Resampled	Not Resampled	40 Scenes/Day (U. S. Data)

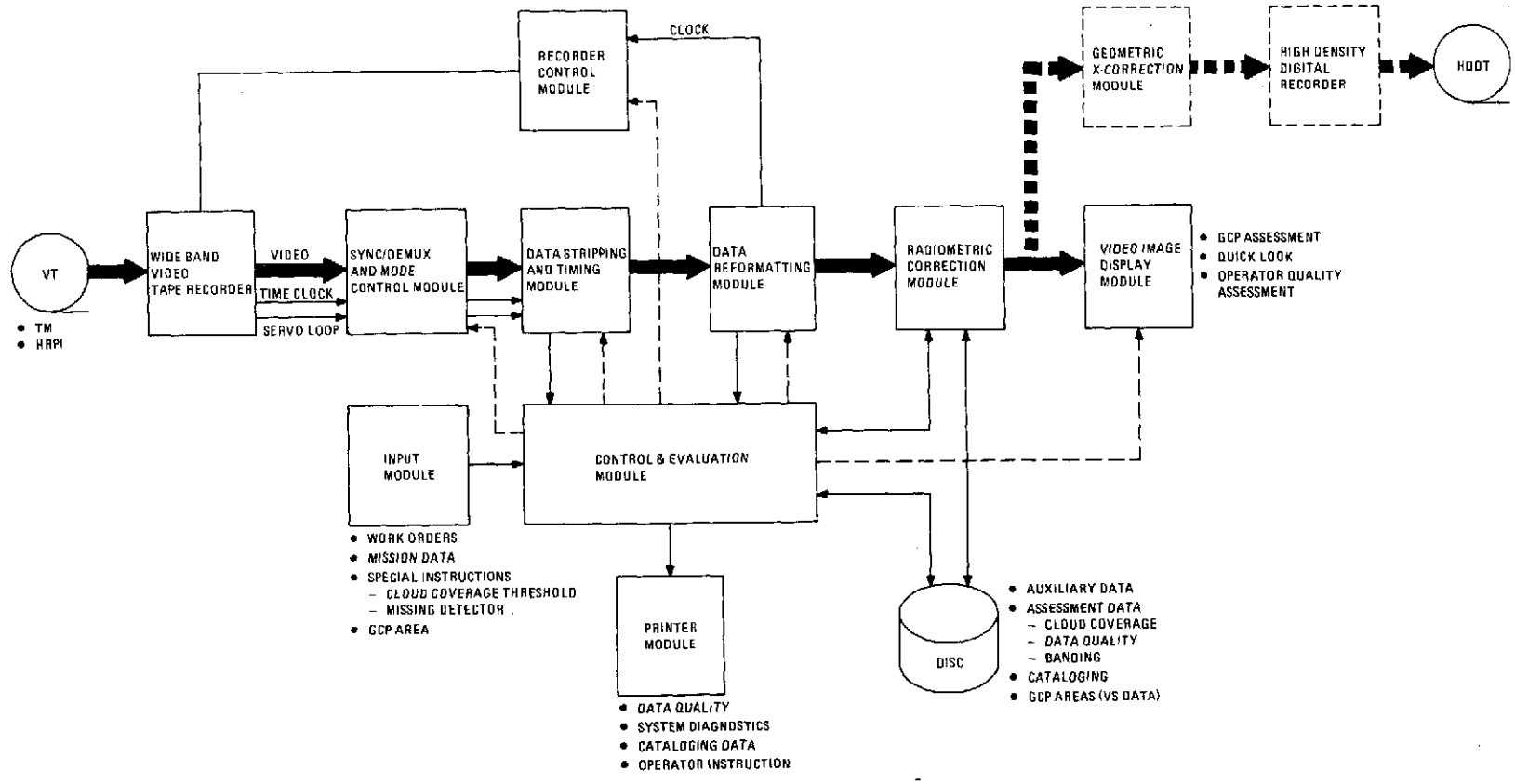

Figure 4.3-3. Pass 1 Processing Functional Flow

assessment data, ground control point areas, and cataloging information is stored on a disc for all data on the video tape. The video data is reformatted, has preliminary radiometric correction applied, and is presented on an image display to allow an operator to assist in data assessment and ground control point area selection. An HDDT is not generated normally during this pass but one can be produced at a slower processing rate if a quick look at the data is desired.

Pass 2 - Image Correction. The functional flow of the second pass through the data is depicted in Figure 4.3-4. During the rewind of the video tapes in preparation for the second pass, the control and evaluation module uses the results of the first pass to calculate geometric and radiometric correction data based on the ancillary data contained on the video tape, as well as the areas of valid data to be processed. Since the actual image correction of the data is more costly and slower to perform than is the preprocessing, throughput can be maximized by the elimination of unuseable data and tape gaps.

Resampling will be performed using $\frac{\sin x}{x}$ as the standard resampling algorithm. Since tapes of both resampled and non-resampled data are output from the system on this pass, a third pass may be used to generate nearest neighbor or bilinear resampled data from the non-resampled tape. Catalog film of the corrected data will be generated as an off-line function independent of the standard radiometric and geometric correction processor.

Hardware Implementation Approaches. Two viable implementation approaches are available for performing the standard on-line image processing in the IPE. These are:

- Micro-Programmable Processor
- Special Purpose Processor

This section provides a basic description of the hardware involved in these two approaches based on a processing requirement of 175 scenes per day for each of the two sensors.

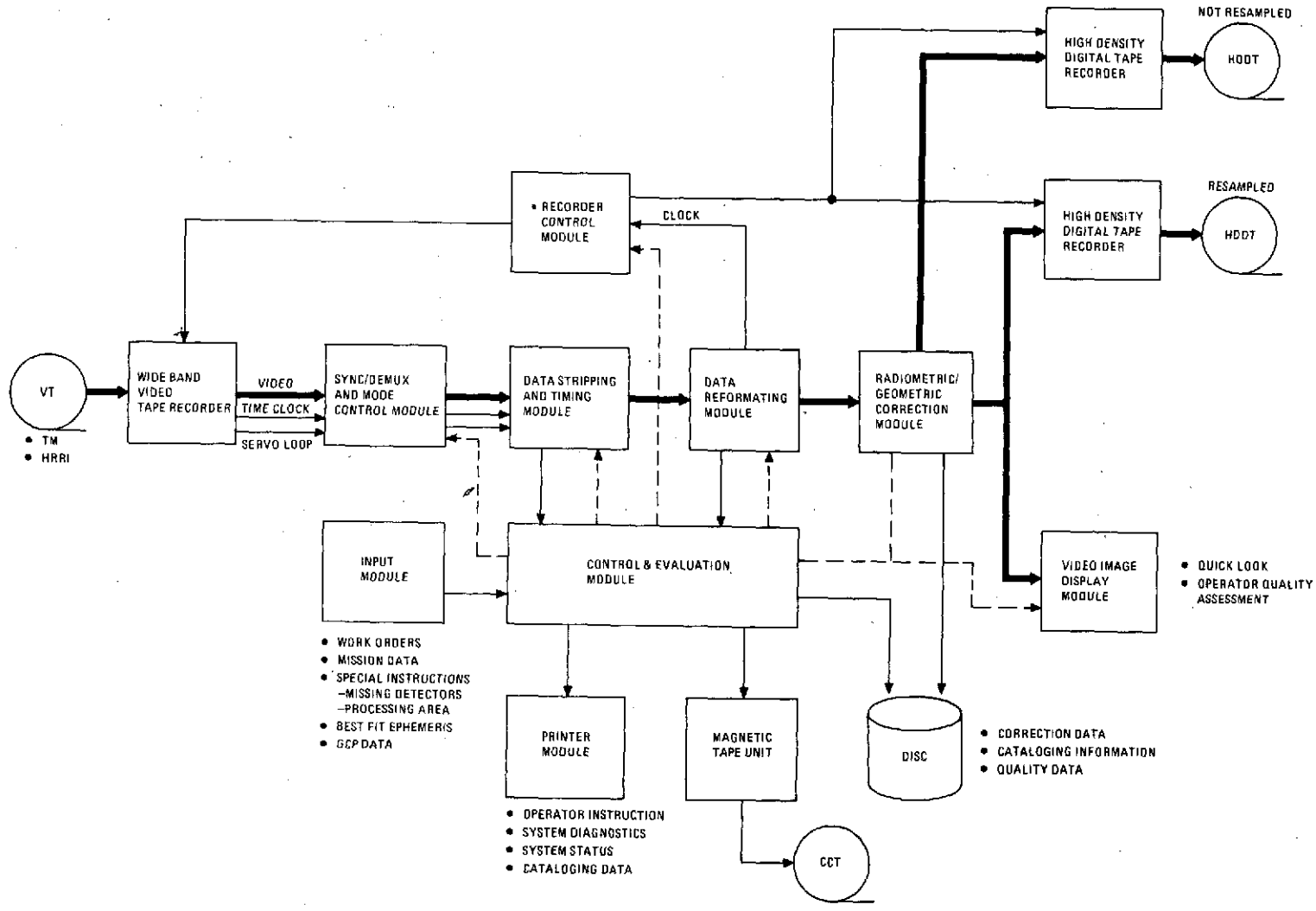

Figure 4.3-4. Pass 2 Image Correction Functional Flow

IBM Micro-Programmable Processor Approach. The baseline hardware configuration for the micro-programmable processor approach is shown in Figure 4.3-5. It consists of three basic units:

- Preprocessing Unit
- Special Purpose Micro-programmable Processor
- General Purpose Processor

In the PPU, special circuitry will establish sync with the HDDT and presents 28 bytes at the output of the decomutation unit at each byte transfer period. The significant bytes active at each byte period are inserted into the Format Buffer - which is of the A/B type (i.e., while the data from one sweep is being read into one half of the buffer, data from the previous sweep is being read out of the other half). The write/read addressing circuitry is hardwired to format either TM or HRPI data streams so that read-out order is spectrally interleaved, line sequential.

Data readout from the Format Buffer is then used, in part, as an address to fetch a corrected data value from the Radiometric Correction Tables. In order to select the appropriate table for any given sensor, its time location and band number are used as the address for a Read Only Store which produces the proper table address and is linked together with the data byte value to form the correction Table address.

The Special Purpose Processor consists of a microprogrammable unit termed the Control Processor which serves a supervisory and I/O control function in the system. Another microprogrammable unit contained in the Special Purpose Processor is the Arithmetic Processor which has been designed to perform arithmetic operations (particularly adds and multiplies) at high speed. It is in this unit that all computational algorithms are performed. The basic data link between these units and the input/output parts is the Bulk Storage unit. As seen in Figure 4.3-5, the Bulk Storage unit communicates with all units of the Arithmetic units. To facilitate execution efficiency, both the Arithmetic Processor and the Control Processor have self contained high speed storage units - these can be considered cache-like devices. The system is modular in terms of Arithmetic Element - Working Store (AE-WS) subunits. Within the Arithmetic Processor,

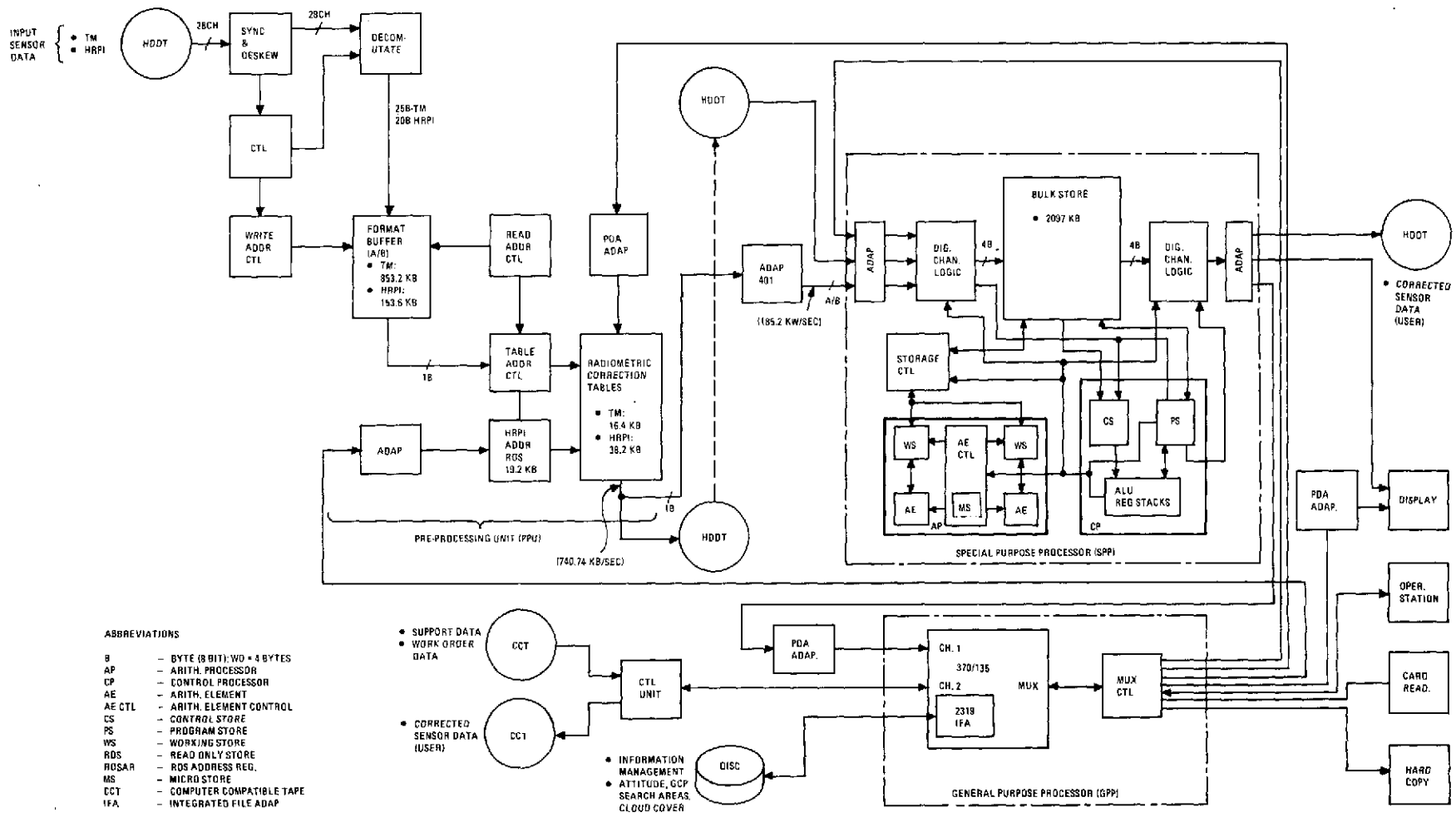

ABBREVIATIONS

B	– BYTE (8 BIT); WD = 4 BYTES
AP	– ARITH. PROCESSOR
CP	– CONTROL PROCESSOR
AE	– ARITH. ELEMENT
AE CTL	– ARITH. ELEMENT CONTROL
CS	– CONTROL STORE
PS	– PROGRAM STORE
WS	– WORKING STORE
ROS	– READ ONLY STORE
ROSAR	– ROS ADDRESS REG.
MS	– MICRO STORE
CCT	– COMPUTER COMPATIBLE TAPE
IFA	– INTEGRATED FILE ADAP

Figure 4.3-5. The IBM Digital Image Correction Subsystem Block Diagram

one to four AE-WS subunits may be specified to more closely match the system capabilities to the processing requirements. The Control Processor microinstruction execution time may vary from 300 nsec to 600 nsec depending on instruction type. The Arithmetic Processor microinstruction execution time is 100 nsec which indicates only execution initiation periodicity, not latency, since the Arithmetic Element part of the processor is pipe-line structured.

The General Purpose Processor is an IBM 370/135 with 245 K bytes of memory. It is connected to the Special Purpose Processor and to CCT drives by standard high-speed channels and to a 2319 disk unit through a 2319 Integrated File Adapter. Connection with the PPU, display, keyboard, card reader, and printer is through a standard multiplexer channel.

GE Special Processor/General Purpose Computer Approach. The hardward configuration for the special purpose processor approach is shown in Figure 4.3-6. It consists of the following elements:

- General purpose computer and standard peripherals
- Special purpose processor
- Input data preprocessor equipment, and
- Standard equipment.

The general purpose computer is a PDP 11/45 with 64K words of memory. It utilizes the RSX-11D multi-task operating system. All ground control location calculations are performed in the computer but by the use of spacecraft rate data all but one of these ground control correlations are over a very small search area (i.e., about 3 x 3 pixels). The computer controls and sets up all the special hardware and performs all the calculations required to generate radiometric and geometric correction functions. The software programs are shown in Table 4.3-3.

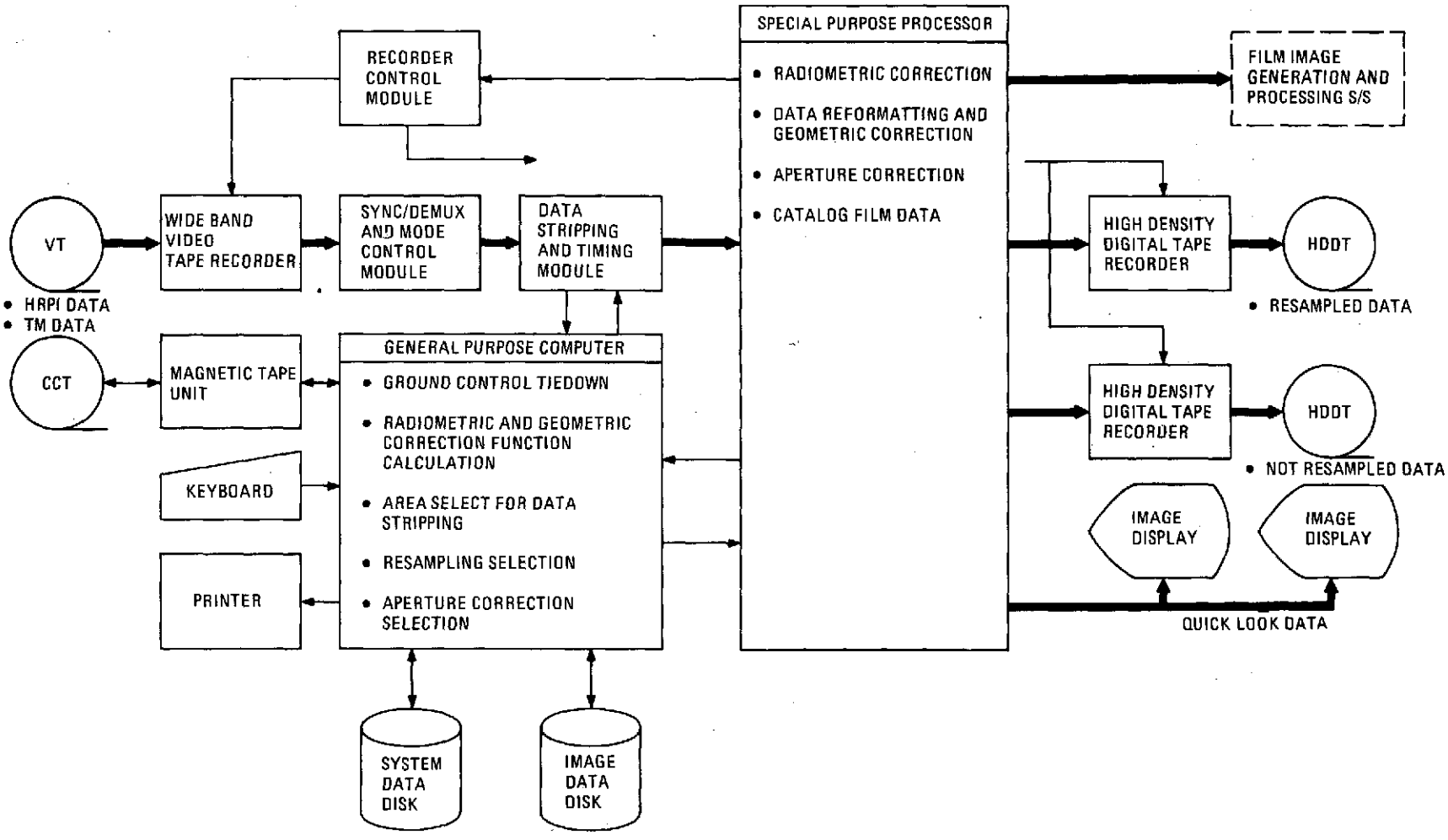

Figure 4.3-6. GE Special Purpose Processor/Hardware Configuration

Table 4.3-3. Software Programs

Classification	Program Listing
Standard Software	o RSX-11D Operating System o PDP Diagnostic Software o Subroutine Library Software o Others
Special Purpose Processor Control & Initialization Software	o Special Hardware Control Software o Special Hardware Intialization Software o Data Stripping and Storage Software
Application Software	o Radiometric Correction Function Calculation Software o Geometric Correction Function Caulcation Software o Ground Control Point Location Software

The special purpose processor consists of a radiometric correction module, a geometric correction and data reformatting module and an operation correction module. The radiometric correction moduleuses a 16 breakpoint table look-up function generator to perform sensor correction. The function generator is loaded with the proper coefficients from a solid state shift register buffer. The buffer can hold up to 19,200 sets of correction tables which is one table per detector for HRPI. The geometric correction and data reformatting module consists of an X-corrector, a solid state buffer memory and a Y-corrector. The X-corrector performs both the data reformatting and the along the scan line resampling. The solid state buffer memory buffers 200 lines of data required for the Hughes Thematic Mapper instrument. The Y-corrector operates on the data in the buffer to provide two dimensional correction for the scenes where mapping in Space Oblique Mecator projection is required. The aperture correction module consists of a 5-line solid state memory buffer and a 5 x 5 programmable hardware correlation filter. The special purpose processor for the baseline configuration operates at 25 Mbps and

processes up to 7 channels in parallel.

The input data processor consists of a sync/demux and mode control module, a data stripping and timing module and a recorder control module. The sync/demux module is a modification of existing hardware. The data stripping and timing module consists of the programmable line and elements counters, a solid state data buffer, a computer interface and a system clock. This module selects predefined ground control areas and sensor calibration data from the data stream, buffers the data and transfers the data to the PDP 115 general purpose computer for storage on the Image Data Disk. The recorder control module consists of two monitors which track the special purpose hardware input and output buffer registers, a difference circuit and two driver amplifiers. This module adjusts the tape speed of the input and output controllers to compensate for the different input and output data rates caused by the along-the-scan-line pixel distortion.

The standard equipment consists of a 120 Mbps Wideband Video Tape Recorder, two 40 Mbps High Density Digital Tape Recorders and two black and white 1000 line image display monitors which can operate in a frame or moving window mode.

The basic configuration can satisfy a throughput up to 70 scenes/day/sensor. For higher throughput rates, the configuration is similar except that more paralleling of hardware components are required to handle the increased data rates. For throughput rate from 70 to 105 scenes/day/sensor, the configuration is modified to include additional hardware multipliers and adders to handle the 40 Mbps data rates. For throughput rates from 105 to 180 scenes/day/sensor the configuration is modified by additional hardware processing elements and a change from 40 Mbps high density digital tape output recorders to 120 Mbps wideband video tape output recorders to handle the increased data rates. For throughput rates from 180 to 250 scenes/day/sensor, the configuration requires an additional processing element in the special purpose processor to process the data at approximately real time rate (100 to 120 Mbps).

4.3.2.1.2 Custom Off-Line Image Processing

The custom off-line processing functions of the Image Processing Element can be subdivided into three independent functional areas, all of which can be executed simultaneously:

- o Digital tape generation and copying
- o Film Image Generation
- o Extractive Processing/Browse File Access.

Table 4.3-4 provides a summary of all custom off-line processing functions.

Throughput requirements listed in the table have a major impact on the cost of implementation of the system; consequently major emphasis has been given to information flow in the design of the custom processing subsystems.

Processing instructions, format requirements and other data pertinent to the custom processing function will be received from the DSE on demand from the off-line processor ooperating as a peripheral device. Work orders required will also be generated by the DSE to provide proper documentation and operate instructions, and status reporting, job completion, etc., will be returned from the custom off-line processing subsystem to the DSE.

Digital Tape Generation. The Digital Tape Generation subsystem has two basic functions:

- o Generating copies of HDDT's for dissemination
- o Providing a HDDT to CCT copy capability.

The basic requirements of the digital tape generation system are shown in Table 4.3-4.

The design of the digital tape generation subsystem is based on the maximum utilization of the equipment (primarily recorders) to meet the specified throughput requirements to minimize total cost. The basic subsystem configurations for the HDDT and CCT generation are shown in Figures 4.3-7 and 4.3-8.

Table 4.3-4. Custom Off-Line Processing Functions

INPUT	FUNCTION/SUBSYSTEM	THROUGHPUT	OUTPUT
HDDT	Digital Tape Generation Subsystem • HDDT Generation - copy only - pixel reformatting - MTF compensation	175 scenes/day 4 copies of U.S. data 10 copies of non-U.S. data	HDDT - standard format and packing density
	• CCT Generation - custom projection - copy only - pixel reformatting - digital enlargement - resolution reduction - MTF compensation	35 scenes/day	CCT - standard format - 1600 and 6250 bits/inch packing density
HDDT	Film Image Generation Subsystem • Catalog Film Image Generation	175 scenes/day/sensor	Film - 1st generation - 9.5" format
	• Custom Film Image Generation	60 scenes/day/sensor	
Film (First Generation)	Film Processing Subsystem • Color Film Generation - false color mix - gamma change	100 scenes/day	Film and Prints - catalog film strip (film only) - color products (2nd gen. & 3rd) - B/W Products (2nd generation)
	• Photo copying - catalog film strip - B/W and color with prints	10 copies 500 scenes/day	
	• 2X and 4X Enlargement - B/W and color - Prints	(included in above number)	
HDDT CCT Film	Extractive Processing Subsystem • classification • feature recognition • feature selection • training	15 scenes/day	CCT Photo copy Hard copy
	Browse Facility • data viewing • photo copy	100 scenes/day	Visual Display Film Hard copy print

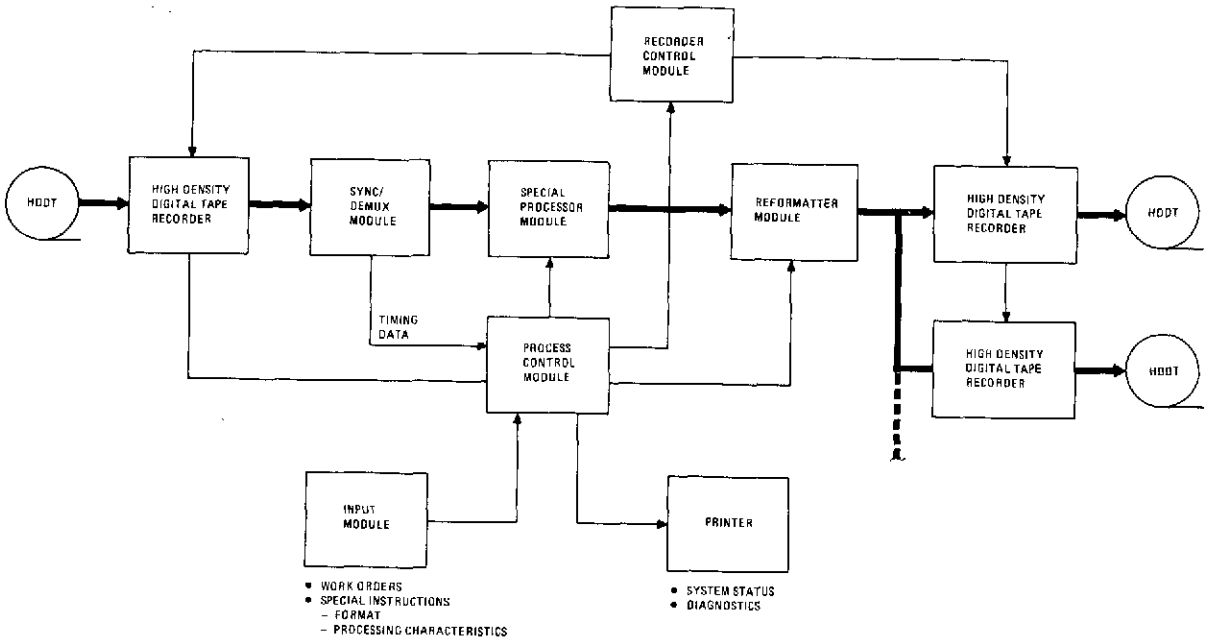

Figure 4.3-7. High Density Digital Tape Generation Subsystem Block Diagram

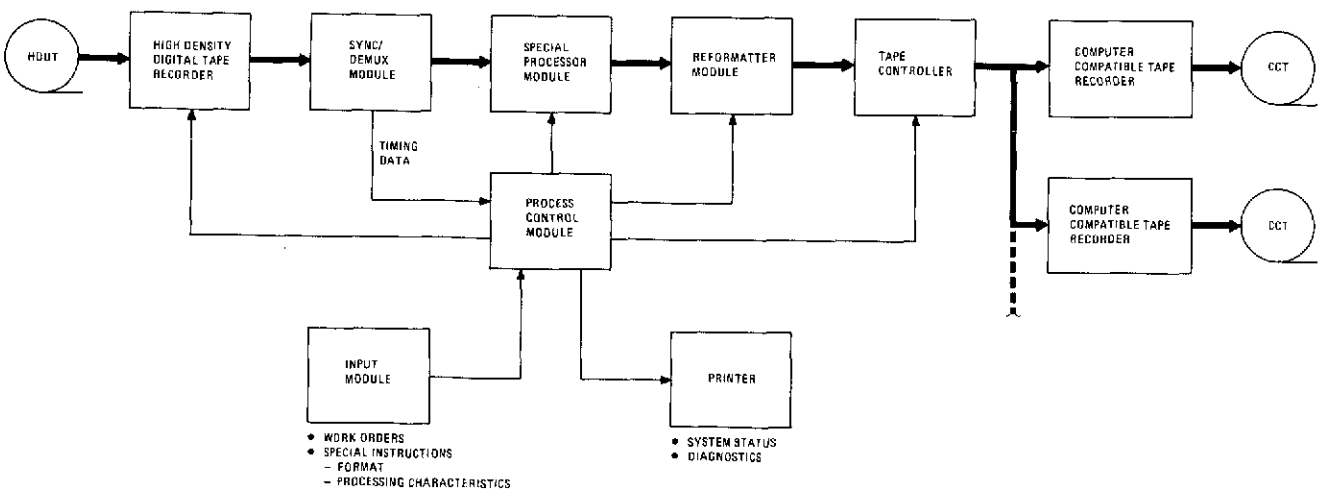

Figure 4.3-8. CCT Generation Subsystem Block Diagram

The HDDT generation subsystem is designed to produce multiple copies of tapes while the CCT generation subsystem is configured to perform custom processing functions and produce CCT's as its normal output. However, the CCT generation system is capable of outputting to an HDDT any custom processed data for interfacing with the Film Image Generation and Processing Subsystem. This is accomplished by running the system with a CCT recorder as the input device, and using the HDDR as the output medium.

Functionally, both the HDDT and CCT generation subsystems operate in the same manner, and the CCT special processor can be incorporated into the HDDT generation system in the event that custom processing, as described in Table 4.3-4 is required on an output HDDT. This similarity is demonstrated in the block diagrams of Figures 4.3-7 and 4.3-8.

Data input on HDDT is reproduced on the HDDR and passed through a synchronization/demultiplexer module. This module contains bit synchronizers necessary to reconstruct the digital data into a clean pulse train, and provides demultiplexing capability to separate data into appropriate TM or HRPI spectral bands. The sync/demux module also provides timing information to the process control module.

The special purpose module is a micro-programmable device utilizing special digital hardware designed to perform the custom processing functions (digital enlargement, MTF compensation, and in the case of CCT's, special map projections) listed in Table 4.3-4.

Data reformatting into the required output format is performed in the reformat module, and data is then output to HDDT or CCT through one of several recorders, depending on the number of copies of the data required.

Since the complete digital tape generation subsystem is controlled by the process control module, any level of reformatting or special processing including direct tape-to-tape copy of HDDT's with no processing or reformatting, can be performed as required.

Instructions on processing and reformatting required are input to the process control module from the DSE through the input module. Any additional instructions or operator intervention required will also be input through this module.

System status, diagnostics and requests for operator action will be output from the process control module to a hard copy printer.

Film Image Generation. The Film Image Generation subsystem satisfies two sets of requirements for film products:

- Catalog film (one band of TM and HRPI data)
- Custom film images.

It is expected that film processing requirements will be met by the present ERTS photo lab, consequently this will not be discussed here.

So that optimum usage of the film recorders themselves (a major cost element) can be obtained, any custom requirements and catalog film generation instructions will be used to provide an intermediate HDDT, compatible with the Film Image Generation subsystem, with a format which will provide optimum data flow through the film recorder. Requirements for film images from custom processed CCT's will also result in this intermediate step. This intermediate HDDT will be used solely for film recorder input; it will not be archived or disseminated to a user.

This HDDT generation system will be similar in design and function to the Digital Tape Generation subsystem, except that input may be either HDDT or CCT, and no special processing will be performed on the data. A block diagram of the HDDT preprocessing system is shown in Figure 4.3-9.

In this figure it is seen that a digital processor module replaces the reformatter module of Figure 4.3.7. The purpose of this digital processor is the control and reformatting of data onto several tapes from a single input HDDT or CCT so that the most efficient packing of data, compatible with optimum use of the film recorders can be accomplished.

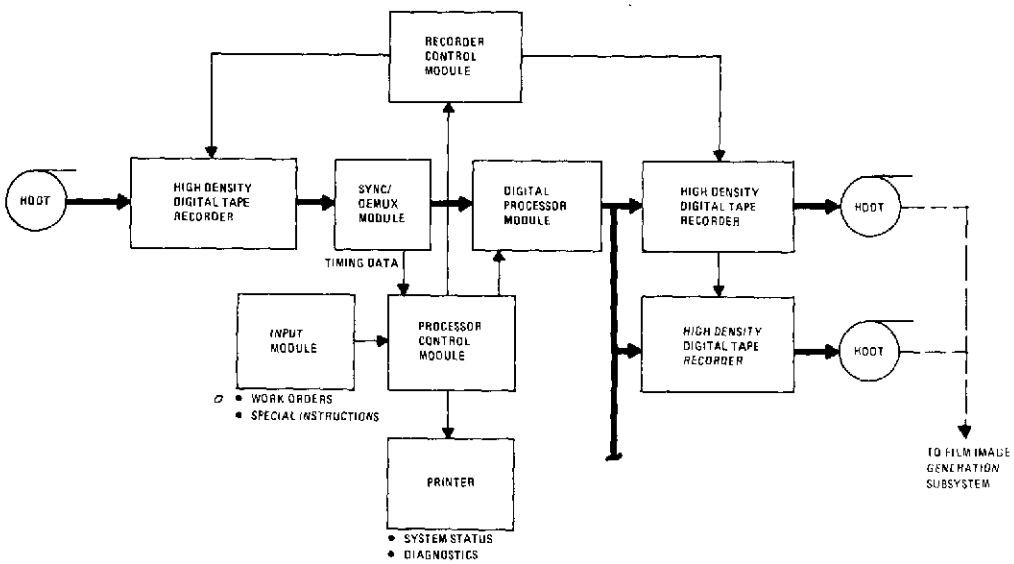

Figure 4.3-9. HDDT Preprocessing for Film Generation

Instructions for the required formatting will be supplied by the DME.

The film recorder subsystem is shown in block diagram form in Figure 4.3-10.

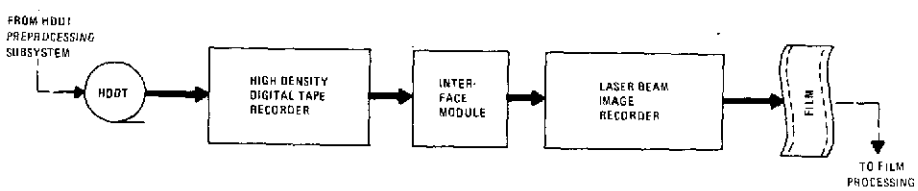

Figure 4.3-10. Film Recorder Subsystem

In order to staisfy the throughput requirements imposed on the system, two identical units will be incorporated. The generation of catalog film images will be a first priority activity for one of these two units.

Inputs to the film recorder units will be from HDDT, with data packed in an image-by-image sequence, thereby permitting the film records to process data at the maximum rate without imposing input data rate restrictions as the limiting factor in processing speed.

All annotation data required will be included in the HDDT format so that no additional inputs will be necessary.

The interface module will provide buffering necessary to account for small differences in speed between the HDDR and the film recorder. It will also provide the necessary HDDR control instructions for between image pauses, thus allowing the film to progress continuously through the recorder between image frames.

Extractive Processing/Browse File Access Subsystem (EPS). The Extractive Processing/Browse File Access subsystem is designed to permit user interaction to accomplish two basic functions:

- Search data archive for availability of suitable data.
- Perform limited Extractive Processing functions.

Although these functions are somewhat tenuously related they will both use essentially the same control, processing and display hardware, and consequently have been merged into a single subsystem to minimize cost.

The Browse File access requirement can be subdivided into three basic activities.

- Review narrative description catalog
- Access catalog film archive
- Review digital data from HDDT archive

The narrative description catalog review and catalog film archive access are essentially manual operations, where a user will first identify available data from a narrative catalog and then review the catalog film based on his estimate of what data is appropriate for his needs.

In the event that a user requires a more detailed examination of the data, such as, for example, review of other spectral bands of the same data, the HDDT archive is accessed to retrieve the appropriate digital data.

This digital data will then be displayed on a remote terminal from the Extractive Processor/Browse File Access subsystem. It is at this point in the use of this subsystem that a single system will satisfy both the Extractive Processing and Browse File Access requirements.

Figure 4.3-11 shows diagrammatically the Extractive Processor Subsystem. The Browse capability is considered to be the same system with no processing other than simple display manipulations (e.g., selection of which band goes to which gun of this display CRT, display gain, contrast, color balance, etc.).

Data may be entered into the EPS from HDDT or CCT. It is loaded onto refresh discs associated with each display terminal, and in the case of the Extractive Processor itself on to one of the set of Image Data discs which can be accessed by the special processor.

The special processor provides the required extractive processing functions which may be called by a user with appropriate access. (The special processor is "locked out" for the browse display terminals). The user controls the special processor through the control

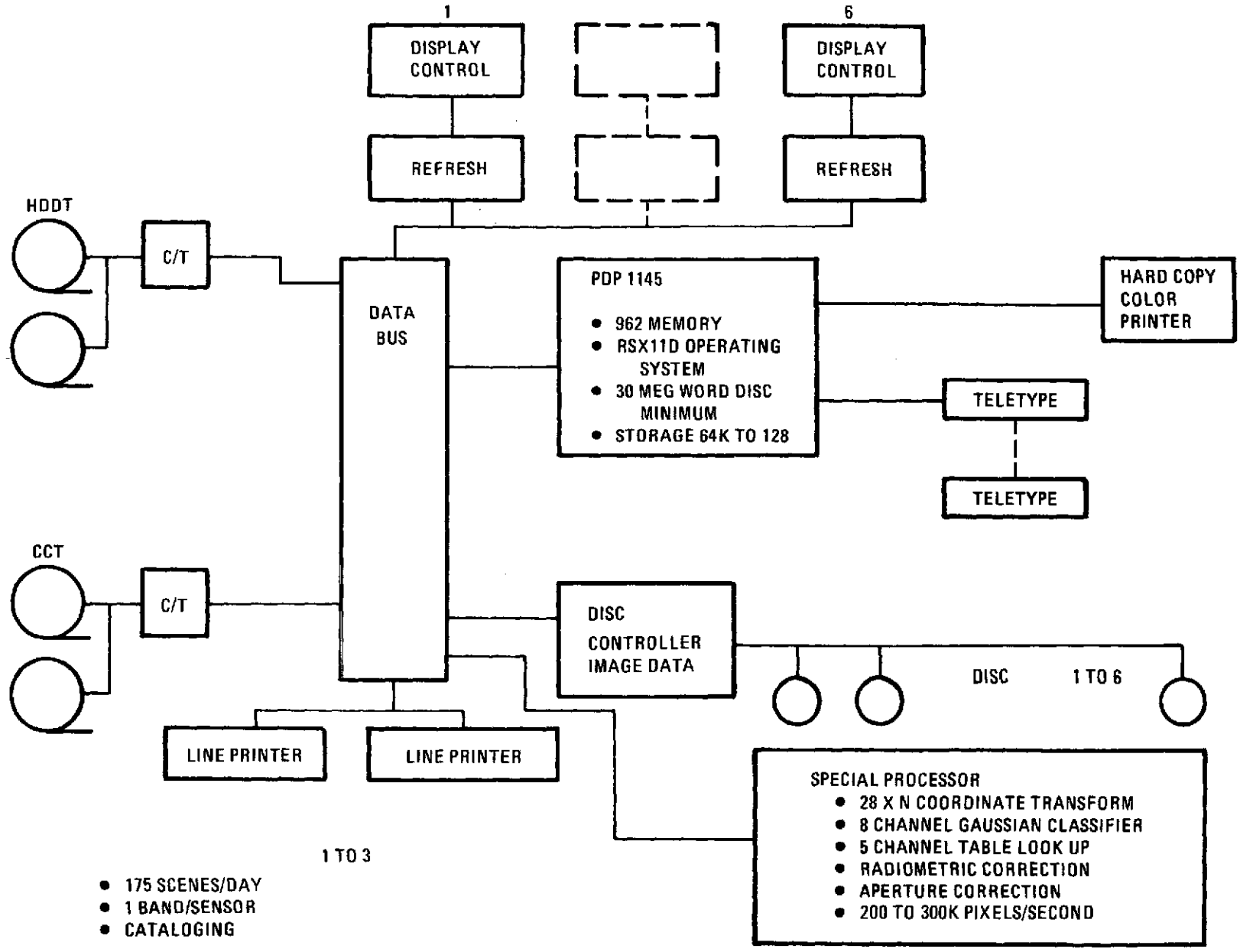

Figure 4.3-11. EOS Extractive System Hardware Diagram

computer to perform the custom processing desired. As new images are generated as a result of classification or other extractive processing functions they are transmitted to the terminal refresh disc for immediate access by the display. Hard copy information is generated by peripheral devices, such as line printers, hard copy color or black and white printers, and in addition CCT's may be generated which can then be played back into the Film Generation System.

From the browse terminals, however, the user can only display the data and perform simple manipulations. Consequently the user must then request copies of HDDT, CCT or film images as required for further analysis at his own facility.

4.3.2.2 Data Management Element

The Data Management Element performs all the data processing for the CDPF (including DCS data) except for video and sensor data processing performed by the IPE. It provides the interface between the EOS Ground Data Handling System and the external world. To accomplish the many functions required to provide this capability, an integrated general purpose hardware/software system is described which resulted from the evaluation of alternate design configurations during the design cost tradeoff studies.

The first of the two basic design implementation concepts for the DME was based on modifying the current ERTS system design concept to meet the requirements imposed by EOS. Two alternates were considered in this approach, the first uses much of the same hardware as ERTS and the second substitutes new computers available at the time of an EOS Implementation phase. The first alternative was the most economical of the two, but for both implementation designs, it was necessary to compromise several important EOS requirements.

The second approach investigated, which is the baseline described here, contains both new software and hardware and is considerably different in design since it has been optimized to satisfy the DME requirements of the EOS system. An Information flow diagram of the DME is shown in Figure 4.3-12. The several software subsystems and

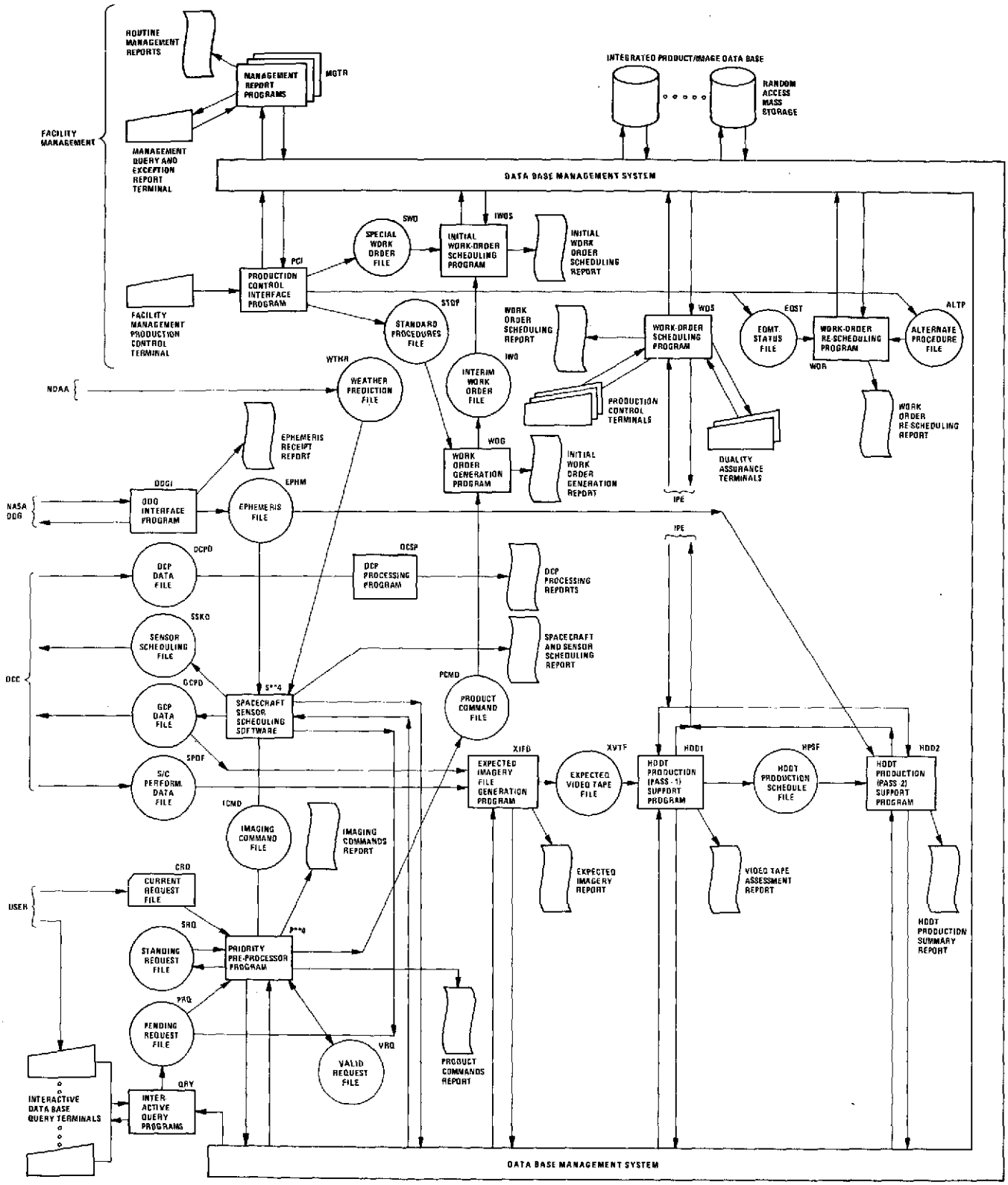

Figure 4.3-12. DME Information Flow Diagram

ORIGINAL PAGE IS
OF POOR QUALITY

the hardware configuration required to implement this system are described following a brief overview.

4.3.2.2.1 DME Overview

The DME monitors and maintains control of all processes as well as top-level operations of the Central Data Processing Facility. No processing activity will be performed unless direction is provided to the processing element/subsystem by the DME. The DME will establish production queues and priorities, based on availability of ancillary data and priorities pre-established by the CDPF manager.

A description of the DME can best be presented by examining its operation through its six major processes listed below:

- User Request Satisfaction
- Work Order Generation
- Command Generation
- Data Base Query
- Production Control
- Product Generation

The operations of the DME start and terminate with the interface with the user. The user initiates all operations by requesting, in one of several ways, products or images. Depending upon the availability of the specific data requested, the spacecraft sensors may or may not be scheduled to collect the images. In any case, the image eventually becomes available for product generation. Once the product is generated, it is made available to the user and the process is complete.

Upon entry of a user request into the DME, a check will be made to determine availability of all data (sensor data, best fit ephemeris, etc.) required for production of the data product item. In addition, as new data is entered into the system, checks will be made to determine outstanding work orders (WO) which require that input. Once these checks have been made and satisfactory matches found between WO's and available data, a series of processing instructions are generated internal to the DME. These processing instructions will then be passed to the appropriate processing element/subsystem for initiation of the required processing. The processing elements/subsystems of the IPE are "smart"

peripherals - that is, they contain the complete software package and default values of input parameters required to execute the processing required.

Upon receipt of instructions from the DME, a set of procedures for the operator of the processing element/subsystem will be displayed. The operator will then load the appropriate tapes, enter any override values of input parameters required and initiate processing. On completion of processing, the operator will manually signal completion to the DME, which will respond with a set of instructions regarding disposition of products generated (store tapes in archive, send film to photo processing lab, send processed film to user dissemination services, etc.). The DME will also transmit the instruction set for the next operation to be performed by that processing element of subsystem.

On completion of the sequence of processing operations required to generate a data product item the DME will provide final disposition - either archive the product in a specific location or send to User Services for dissemination, and, on receiving notification of accomplishment of the final disposition, will close out the WO as completed. Appropriate updates to the data base and data base catalogs will be made by the DME at this time. Appropriate additions to the management information statistics file will also be made.

The DME, as well as controlling the processing functions performed on data, will also maintain the EOS data base. All video tapes received from remote sites will be uniquely identified, and data input from the OCC will identify sensor start/stop times and coverage by tape ID. On the first pass through the IPE on-line processor the header record will be compared with the ID data expected by the DME. In the event these two data sets do not match processing of the tape will be terminated and instructions for operator action will be generated by the DME. Instructions for a new tape to be loaded and processed will be generated.

Provided the two data sets match, the DME will update the data base to indicate availability of the raw video data. As data is processed through pass 1, the necessary information for radiometric and geometric corrections is stripped out so that the IPE can generate

the necessary correction functions during the period that the video tape is being rewound for pass 2. Quality assessment and cloud cover anaylsis are also performed during pass 1. On completion of pass 1 through the on-line portion of the IPE, quality assessment data and editing information is added to the data base.

The user may interrogate the data base in either of two ways: off-line catalog perusal or on-line interactive data retrieval from the computer data base. The CDPF provides catalogs of available imagery which include photographic prints of a limited subset of all images as well as descriptive and retrieval information. The catalogs are maintained in the Browse area and copies are also sent to selected users. The same descriptive and retrieval information is accessible by interactive data base query terminals in the Browse area as well as other remote locations. From these terminals a user may describe desired generic imagery in terms of scene coverage, sensor, quality, spectral band and time. The Data Base Query software programs will search the data base for any or all specific images meeting the required specifications. If images are available, the retrieval data is printed.

4.3.2.2.2 DME Software

There are fourteen major software subsystems in the DME which are listed below.

A	PPPP	Priority Pre-Processor Program
B	PSS	Payload Scheduling Software
C	WOG	Work Order Generation Program
D	IWOS	Initial Work Order Scheduling Program
E	WOS	Work Order Scheduling Program
F	WOR	Work Order Re-Scheduling Program
G	PCI	Production Control Interface Software
H	MGTR	Management Reports Software
I	ODBI	NASA Orbit Determination Group Interfaces Program
J	DCSP	Data Collection System Processing
K	QRY	Interactive Data Base Query Program
L	XIFG	Expected Imagery File Generation Program

M	HDD1	HDDT Production Pass 1 Support Program
N	HDD2	HDDT Production Pass 2 Support Program

Each subsystem is composed of one or more software modules which may be programs, subprograms, procedures and/or overlay segments. In general, the software modules will execute in the environment of the Operating System software provided with the central processor. Most software modules will also utilize the Data Base Management System software provided with the central processor. Software subsystems will interface among themselves by mass storage or main memory files (see Table 4.3-5). These files may be unique to one or more subsystems or common to all, as the IPID data base files. A functional description of each major software subsystem is defined in the following paragraphs.

A data structure diagram of the IPID data base is given in Figure 4.3-13.

Priority Pre-Processor Program (PPPP). This program examines all requests for products or images and produces either image or product commands. PPPP examines the various request files (standing request file - SRQ, pending request file - PRQ, and current request file - CRQ) for user requests for products or images and forms a single file of valid requests - VRQ, ordered by priority. Each request is scanned and compared against the images in IPID. If a suitable image already exists, a command entry is made in the product command file PCMD to create the requested product. If a suitable image does not exist, a command entry is made in the imaging command file ICMD to obtain the requested image. In both cases, an entry is printed on the product or image commands report and the daily activity log file DLOG. If a suitable image is not available and an image command is generated, an entry is made in the data base for that image showing that it is a pending request. Subsequent requests for that image will not cause duplicate image commands.

Table 4.3-5. DME Software System Files

Acronym	File Name
SRQ	Standing Request File
PRQ	Pending Request File
CRQ	Current Request File
VRQ	Valid Request File
PCMD	Product Command File
ICMD	Image Command File
DLOG	Daily Activity Log File
EPHM	Predicted Ephemeris File from NASA ODG
WTHR	Predicted Weather File from NOAA
SSKD	Sensor Scheduling
GCPD	Ground Control Point Data File
IWP	Interim Work Order File
STDP	Standard Procedure File
SWO	Special Work Order File
ALTP	Alternative Procedure File
EQST	Equipment Status
DCPO	Data Collection Platform Data File
SPDF	Spacecraft Performance Data File
XVTF	Expected Video Tape File
HPSF	HDDT Production Scheduling File

Payload Scheduling Software (PSS). PSS accepts imaging commands and produces data files for the OCC by which the OCC commands the spacecraft operations. PSS scans the prioritized file of image commands on the ICMD file and compares against the expected orbital position of the spacecraft (as defined on the predicted ephemeris file EPHM from NASA ODG) and the expected weather and cloud conditions as defined by NOAA (on the weather prediction file WTHR). The program attempts to schedule all images which are predicted to be possible; conflicts are resolved by the priority of the command.

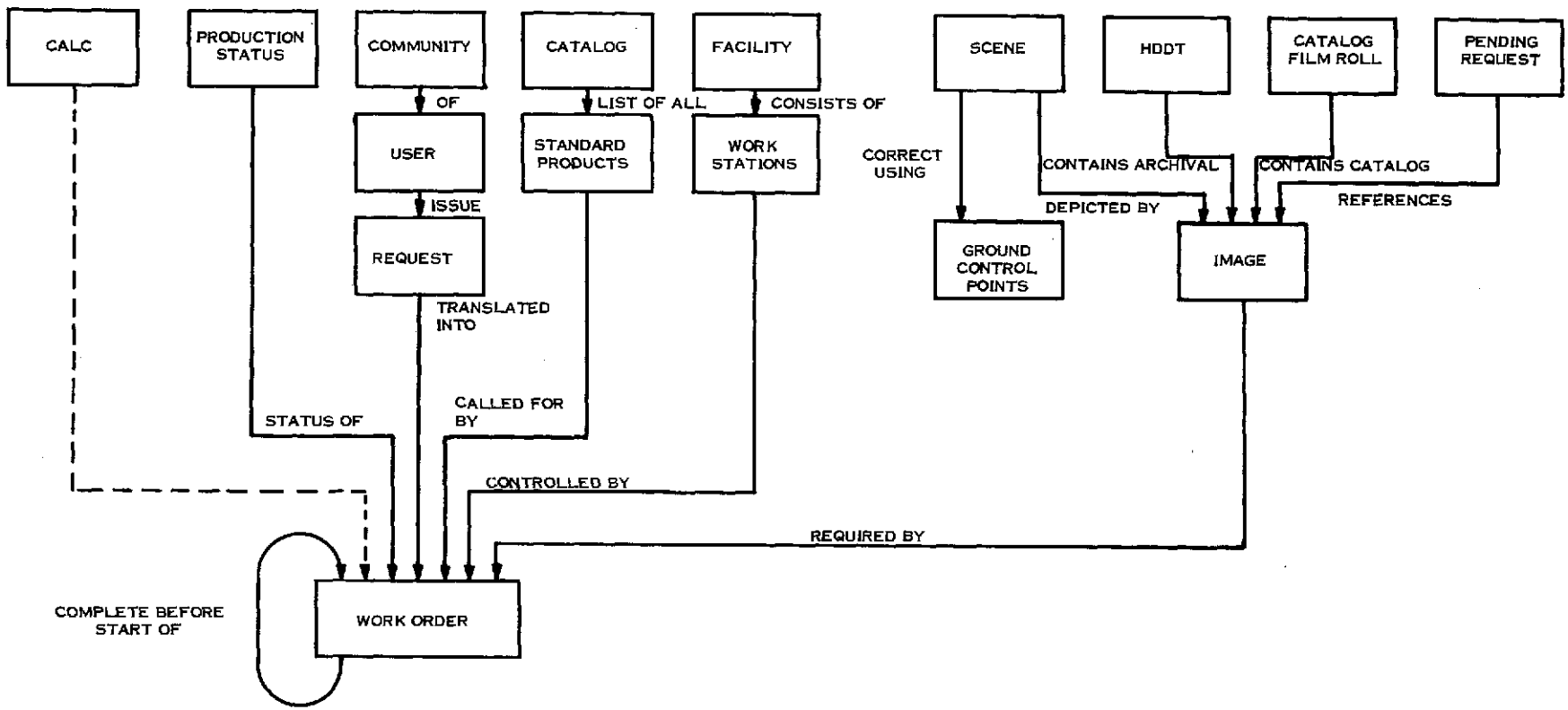

Figure 4.3-13. IPID Data Structure Diagram

A feasible time-profile of sensor operations is produced on the sensor scheduling SSKD file for the next spacecraft pass. Unsatisfied commands are returned to the PRQ file. Ground Control Point data and geometric and radiometric correction data are included on the SSKD file. The OCC will use the data on the SSKD file together with data on the Ground Control Point Data file - GCPD to format data and operational commands to the spacecraft.

PSS produces a report summarizing the projected sensor time profile and also produces an entry on the Daily Activity Log File - DLOG for each image command, whether satisfied or unsatisfied.

Work Order Generation Program (WOG). WOG accepts a prioritized list of product commands and based on standard procedures for standard products, produces a set of work orders.

WOG accepts product commands from the PCMD file and for each product command produces one or more work orders. These work orders will be based upon a pre-defined procedure from the standard procedure file STDP for each standard product. Each work order will be associated with a single type of work station and each will be tagged as required for proper sequence of execution.

The work orders are not yet entered into IPID; they are held in the Interim Work Order File - IWO. For each work order generated, an entry is made on the work order generation report and the Daily Activity Log File DLOG.

Initial Work Order Scheduling Program (IWOS). IWOS accepts standard work orders from the Work Order Generation Program or non-standard work orders from the Production Control Interface Program and merges them into the work order queue of the appropriate work station. Relative position within the queue is determined by the assigned priority.

Standard work orders are received from the IWO file while special or non-standard work orders are received from the SWO file. The work order queue for each work station is

maintained in the IPID. For each work order scheduled, an entry is created on the Initial Work Order Scheduling Report and the Daily Activity Log File - DLOG.

Work Order Scheduling Program (WOS). WOS receives notifications from work stations that they are able to accept work orders. The notification may be the completion of a previous work order or the simple fact of availability. WOS will transmit one or more work orders to the work station together with necessary and sufficient information to perform the required operation. The algorithm used to select the work order to be transmitted chooses the highest priority work order in the work order queue for that work station. Checks are made to ensure that the work order is feasible (all pre-requisite work orders complete). After choosing the highest priority feasibile work order, the algorithm scans the entire work order queue of that work station for any other feasible work orders which could logically be performed at the same time. The logical procedure for this decision is unique to the work station and is coded separately for each work station.

When notification that a completed work order is received, WOS ensures that all other work orders that are waiting for its completion are marked appropriately.

WOS treats all work orders similarly, whether the work order is transmitted by computer-computer data transfer or hard copy or both. All work order data is contained in the IPID.

WOS will only manipulate work orders in the queue assigned or delete them. The Initial Work Order Scheduling Program (IWOS) and the Work Order Rescheduling Program (WOR) are the only programs which may put a work order in a work station queue.

For every work order transmitted or completed, WOS will write an entry on the Work Order Scheduling report and the Daily Activity Log file - DLOG.

Work Order Rescheduling Program (WOR). WOR is used to readjust work orders from the work station queue originally assigned to possible alternative work stations. This program is always initiated explicitly by Production Control personnel. It might be called

into execution because of the failure of, or reavailability of previously failed, work stations as defined in the equipment status file - EQST or simply by the judgement by Production Control that queues for certain work stations indicate an excessive backlog.

WOR reassigns work orders based on predefined procedures as defined in the alternative procedure file - ALTP. WOR is the only program which will remove a work order from one work station queue and place it in another.

For every work order reassigned from one work station queue to another, an entry will be placed on the Work Order Rescheduling Report and the Daily Activity Log - DLOG.

Production Control Interface Software (PCI). PCI is a series of interactive utility programs for selective and exact control of the DME. PCI performs five basic utility functions.

1. Interactive Data Base Query and Modification. Selective retrieval and alteration of any item in IPID.
2. Standard Procedure Definition. Interactive definition of a new standard product by defining the sequence of work orders necessary to generate it. New procedures are incorporated into the standard procedure file - STDP.
3. Special Work Order Definition. Selective incorporation of non-standard or other special work orders into special work order file SWO and into normal production processing.
4. Equipment Status Notification. Interactive update of equipment status file EQST and possible command to execute the work order rescheduling program to respond to new equipment state.
5. Alternate Procedure Definition. Interactive definition of alternative procedures to be applied under abnormal operating conditions such as equipment failure or abnormally long queues for certain work stations. New definitions update the Alternate Procedure file - ALTP for use by the Work Order Rescheduling Program - WOR.

Management Reports Software (MGTR). MGTR is a large set of individual management report programs. Each program produces a different report. New programs for new reports may be added to the system at any time. The individual reports may be interactive for small amounts of information or bulk printing of routine reports. Reports may also be generated because of anomalous conditions which must be brought to the attention of Facility Management and/or Production Control immediately. Reports will be directed to either the high speed printer or a special interactive terminal. All reports, with the possible exception of certain warning reports, are generated solely from current IPID information.

NASA ODG Interface Program (ODGI). ODGI is a special-purpose interface program which services the communications interface link between the DME and the ODG computers. Predicted and historical ephemeris data is received and used to update the spacecraft ephemeris file - EPHM. Ephemeris data will be used to generate spacecraft/sensor time profiles and to provide image annotation data for the HDDT generation process. As new ephemeris data is received, it continually replaces earlier data for the same time period. In this manner the most recent ephemeris data is always used for image annotation. Every receipt of new ephemeris data is documented by the production of an ephemeris receipt report and an entry in the Daily Activity Log File - DLOG.

Data Collection System Processing (DCSP). The DCSP program will access the shared disc or tape file of DCS data from the OCC. The DCP data file DCPD will contain raw DCP data. The DCSP program will sort each DCS message by platform and eliminate garbled transmissions. A catalog update for DCS data will be generated and a DCS processing report will be printed with data sorted and formatted. For each DCS data file processed, an entry will be made in the Daily Activity Log File - DLOG.

Interactive Data Base Query Program (QRY). The QRY program services the interactive data base query terminals in the browse processing area. The QRY program allows selective data retrieval from the IPID via the Data Base Management System. A secondary function of QRY is to allow the user to enter product-image requests into the pending

request file - PRQ as a result of a successful data base query.

Expected Imagery File Generation Program (XIFG). XIFG receives spacecraft and sensor performance data on the spacecraft performance data file - SPDF. Based on the timing data and the pending request data in the IPID, XIFG generates a file summarizing the expected video tape contents. The file also contains Ground Control Point data. The expected video tape file - XVTF is created as soon as the SPDF file indicates that a video tape will be produced. The XVTF file remains in storage until the video tape is processed by the IPE. For each XVTF file created, a corresponding Expected Video Tape Report is printed and an entry is made on the Daily Activity Log file - DLOG.

HDDT Production Pass 1 Support Program (HDD1). HDD1 supports the on-line operations of the IPE and controls the interface between the DME and IPE during Pass 1. HDD1 provides data to the IPE concerning the Pass 1 processing requirements for a Video Tape by retrieving the appropriate Expected Video Tape File - XVTF and transmitting the information to the IPE. During Pass 1 the IPE will send assessment data regarding the actual Video Tape Contents back to the DME. After the Video Tape has completed Pass 1, HDD1 organizes the data by scene and updates the IPID by transferring image records in the IPID from the pending request chain to a specific HDDT chain. New image records may also be added to that HDDT chain if required. The expected HDDT format is planned based on the current image production requests and their priorities as described in the HDDT production schedule file - HPSF. For every video tape processed, HDD1 prints a Video Tape Assessment report and makes an entry on the Daily Activity Log File - DLOG.

HDDT Production Pass 2 Support Program (HDD2). HDD2 supports the on-line operations of the IPE and controls the interface between the DME and IPE during Pass 2. HDD2 combines the most recent spacecraft ephemeris data in the EPHM file (if required) with the data in the HDDT production schedule file - HPSF to produce all necessary information to direct the IPE operations of HDDT production and annotation. HDD1 controls the transmission of the data to the IPE as required and receives back the production status of the HDDT(s). For every HDDT produced, HDD2 writes an HDDT production summary report,

updates the IPID for a completed HDDT and generates an entry on the Daily Activity Log File - DLOG.

4.3.2.2.3 Computing Services Subsystems

The computing services subsystem performs all automatic data processing for the CDPF except for instrument data processing within the IPE. The specific functions include:

- Data Base Query
- Data Base Maintenance
- Sensor Scheduling
- Image Processing Element Direction
- Automatic Production Control
- DCS Platform Data Processing
- Facility Management Accounting and Reporting
- Other tasks as assigned by Facility Management.

The computing services subsystem is an integrated set of data processing equipment to execute the software described in the previous section. It consists of the following equipments configured as shown in Figure 4.3-14.

- Central Processor Unit. The basic intelligence of the subsystem, executes stored programs, manipulates data and communicates with input/output devices,
- Main Memory. High speed, random access memory for on-line storage of programs and data.
- Medium Capacity Disc. Random access mass storage for storage of data files to be shared with OCC processor.
- High Capacity Disc. Random access mass storage for storage of Integrated Product - Image Data Base (IPID) and other data files. Also used for storage of programs not currently executing.
- Fast Access Disc. Random access mass storage characterized by minimum latency and high data transfer rate. Used for system software storage and data "swapping".

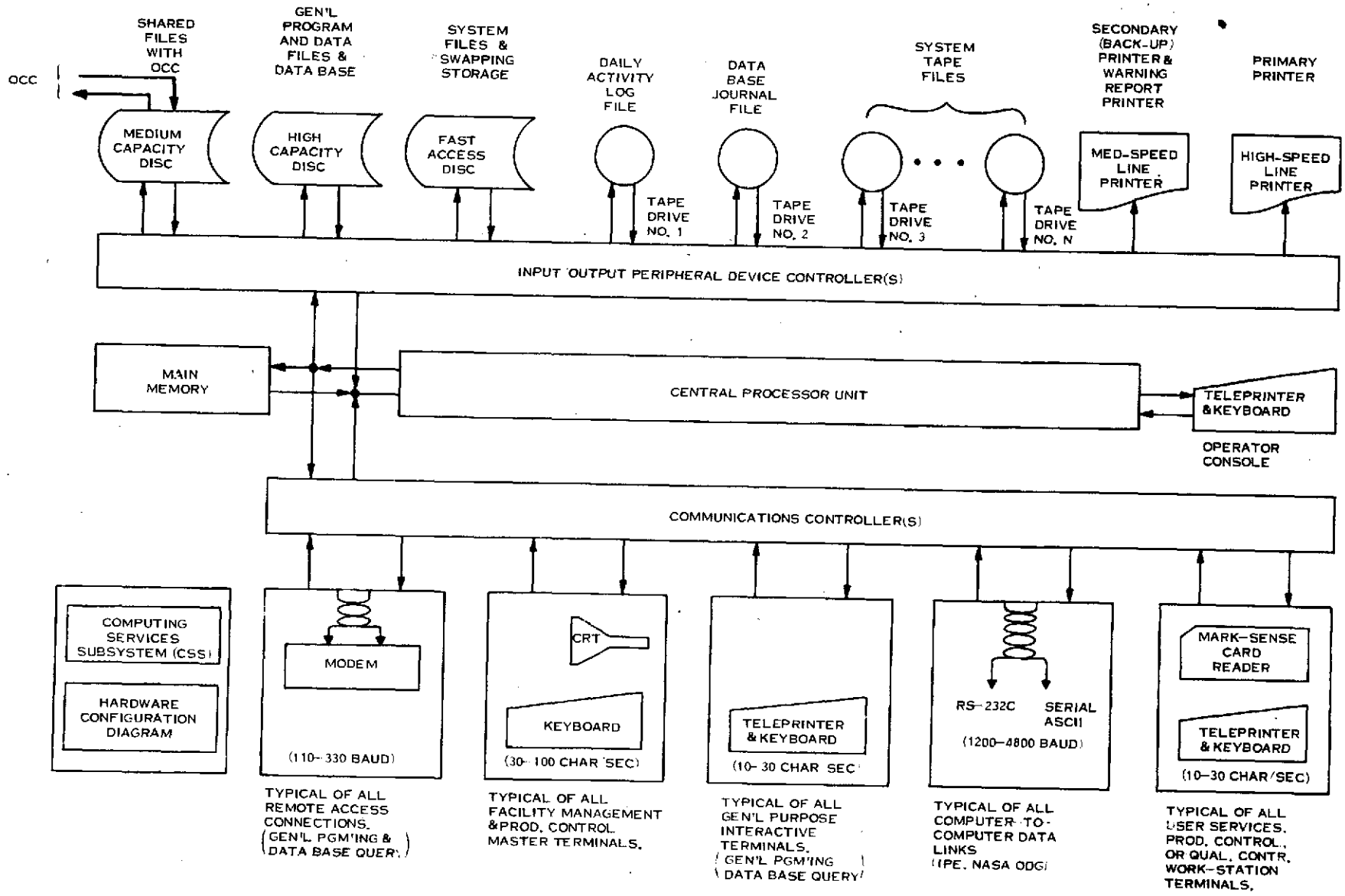

Figure 4.3-14. Data Management Element Hardware Configuration Diagram

- Tape Drives. Sequential access mass storage on removable magnetic tape reels. One drive dedicated to the Daily Activity Log File - DLOG. One other drive dedicated to the Data Base Journalization file for data base recovery. Other tape drives are used as required for system functions such as read-in of system software, intermediate "scratch" data files and data base "dumps".
- Primary Line Printer. High speed line printer for all hard copy reports except those specifically designated for other printers.
- Secondary Line Printer. Medium speed line printer used for exception (anomalous condition) reporting to Facility Management and Production Control. Also serves as backup to primary line printer.
- Input/Output Peripheral Device Controllers. Special purpose hardware interface between Central Processor Unit and the various input/output devices. Primarily used for high speed parallel data transfer.
- Communications Controller. Special purpose hardware interface between Central Processor Unit and various remote terminals. Primarily used for low/medium speed serial data transfer.
- MODEM. Convert low speed serial data to audio tones to communicate data over leased or switched telephone lines. At remote location another MODEM interfaces with a data terminal. The remote terminal may be used for general programming and/or data base query.
- CRT/Keyboard. Medium speed data terminal for interactive alphanumeric data transmission. Typical of all terminals used by Production Control and Facility Management for System Monitoring and Control.
- Teleprinter/Keyboard. Low speed data terminal for interactive alphanumeric data transmission requiring hard copy. These terminals will be those for Data Base Query in the Browse Processing area. Other such terminals may be used throughout the facility for general programming.
- High Speed Serial Data Links. These links will operate at high data rates over dedicated lines. Used for all computer-computer data transfer such as between the DSE and the IPE or NASA ODG.

- Teleprinter/Keyboard and Mark Sense Card Reader. This is a special purpose data terminal used throughout the IPE and DME to implement the Production Control schedule. The low speed teleprinter-keyboard is used to print Manual Work Orders on special work order forms containing machine readable code blocks. When complete the work order is fed back into the system via the mark senser card reader. The same type of terminal is used within the User Services area.

4.3.4 PERSONNEL

The CDPF manpower organization shown in Figure 4.3-15 is structured under the CDPF Operations manager. The functional nature of this organization provides for a separate but concentrated technology base in each area to meet the system production, quality and operability maintenance requirements. A total of 188 people are required by the CDPF elements shown in this figure with the following breakdown.

o Operations	10
o IPE	25
o DME and User Services	44
o Quality Control	11
o Photo Processing	69
o Production Support	29

Overall direction of the operational functions and supporting service activities is provided by the CDPF operations manager through an operational coordination staff. Key members of this staff include a technically cognizant System Engineer and coordinator for quality assurance production control and maintenance/logistics operation. Administrative services for the CDPF facility and contractor personnel are executed through an administrative staff member. A separate staff including a maintenance and operation manager and supervisors are assigned to assure integration with NASA management.

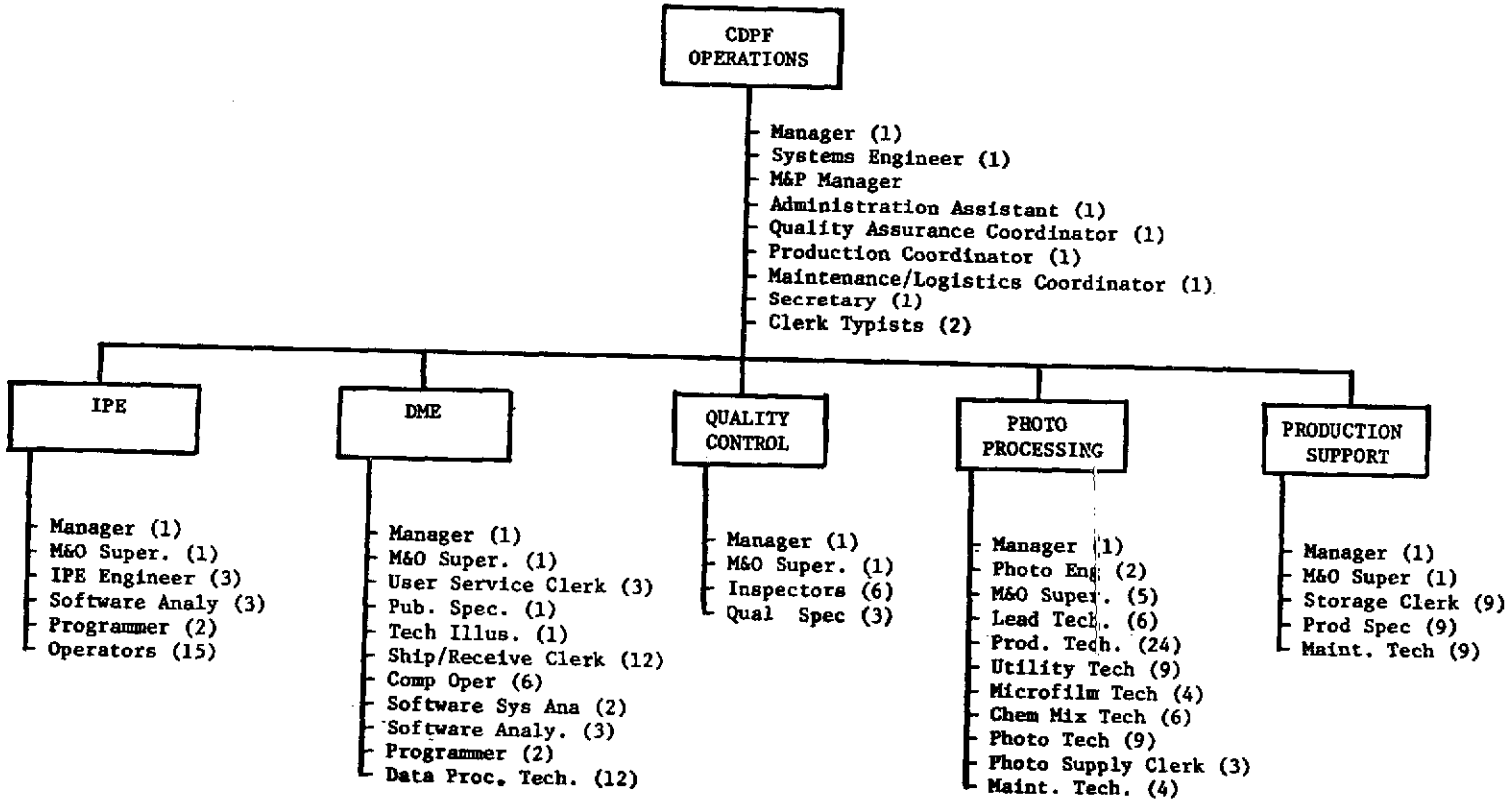

Figure 4.3-15. Central Data Processing Facility Personnel Organization

4.3.5 FACILITIES

The CDPF facility is comprised of the major sections listed below. They are separated as they are because the functions performed and equipment used are significantly different. Also shown are the estimated floor space requirements.

CDPF Section	Area (sq. ft.)
o Standard on-line processing	1300
o Custom product generation	1700
o Photographic processing	4000
o Data management	3000
o Quality control	900
o Computer (shared with OCC)	1300
o Maintenance	800
o Overhead (offices, corridors, rest rooms, etc.)	4000

4.4 LOW COST READOUT STATIONS

The basic Low Cost Readout Station (LCRS) consists of all hardware and software needed to acquire and track the EOS-A or EOS-B Satellite, receive, record, process and annotate the instrument data from the satellites and to provide the appropriate interfaces with the unique local user provided display and extractive processing equipment.

The design concept uses pre-programmed open loop pointing of the receiving antenna and direct recording of the data on to a magnetic tape recorder. The system is designed to receive and record either Compacted Thematic Mapper (CTM) or Multi-spectral Scanner (MSS) data. Postpass, the data is played back and processed at reduced data rate. To minimize LCRS costs, along scan (x-axis) geometric corrections are implemented in the spacecraft and only radiometric corrections are implemented in the LCRS for CTM data. This results in data geometrically accurate to about one pixel and fully radiometrically corrected. MSS data is radiometrically corrected only. This design concept allows the local user to directly receive and process high quality multispectral data for minimum investment.

4.4.1 FUNCTIONAL REQUIREMENTS

The major inputs to the Low Cost Readout Stations consist of the following:

a. Land coverage schedules provided by the EOS Project Office, via the OCC;

b. Predicted satellite acquisition time, position and period of transmission over the local user area of interest provided by the EOS Project Office via the OCC; and

c. Either MSS image data from the EOS-A Satellite or compacted TM image data from the EOS-A or EOS-B Satellites.

The key system functional requirements for the Low Cost Readout Stations are:

a. Coverage - The Low Cost Readout Stations will be capable of acquiring image data from the EOS Satellite over a ground area defined by a 500 km radius from the Low Cost Readout Station.

b. Instrument Data Content - The Low Cost Readout Stations will be capable of receiving and processing both, but not simultaneously, full five band Multispectral Scanner (MSS) image data and the various modes of CTM image data listed below:

Mode	Ground Resolution* (meters)	Spectral Bands	Swath Width (percentage)
1	60m	All 6	100%
2	30m	All 6	25%
3	30m	Any 3 of the first 5 +band 6	50%
4	30m	Any 1 of the first 5 +band 6	100%

*Applies to bands 1 through 5; band 6 is always 120 meters

c. Output Products - The Low Cost Readout Stations will be capable of generating the following output products:

1. Nine-track IBM computer compatible tapes (CCT's) containing the processed and corrected image data;

2. Processed and corrected image data to the local user for visual display during generation of the CCT's or during playback of CCT's; and

3. Processed and corrected image data to the local user for photographic film recording during playback of CCT's at reduced speeds compatible with local user film recording equipment.

d. Subsystem Organization - The Low Cost Readout Stations will consist of a Data Acquisition Subsystem, a Data Processing and Correction Subsystem and Data Display and Extractive Processing Subsystem. The Data Acquisition Subsystem and the Data Processing and Correction Subsystem shall be standardized between Low Cost Readout Stations; the Data Display and Extractive Processing Subsystem shall be tailored to fit the needs of the particular user and therefore station unique.

The subsystem functional requirements are delineated in the following paragraphs.

Data Acquisition Subsystem. The Data Acquisition Subsystem will be capable of acquiring and tracking the EOS-A and EOS-B Satellites over a period of up to 135 seconds by means of a pre-programmed paper tape input produced by the Data Processing and Correction Subsystem. The Data Acquisition Subsystem will also be capable of receiving the 15 Mb/s image data from the fixed wideband satellite antenna and demodulating and recording both the data and clock directly on a fixed head high density digital tape recorder. The high density digital tape recorder shall be capable of recording the 15 Mb/s image data and playing back the recorded data at a reduced rate compatible with the computation capability of the mini-computer within the Data Processing and Correction Subsystem.

Data Processing and Correction Subsystem. The Data Processing and Correction Subsystem is to be capable of accepting the recorded image data from the Data Acquisition Subsystem, reconstructing the data and clock signals and demultiplexing the data (one band for each pass through the HDDT). The Data Processing and Correction Subsystem will also be capable of performing radiometric correction on the input data and data format conversion for producing computer compatible tapes (CCT's) of the corrected image data and simultaneously transferring this data directly to the local user display equipment.

The CCT's shall be capable of playback reduction ratios compatible with local user film recording equipment.

Data Display and Extractive Processing Subsystem. The Data Display and Extractive Processing Subsystem is to be capable of displaying the image data and generating photographic images of the data received from the Data Processing and Correction Subsystem. The full requirements for this subsystem will be based on the unique requirements for each local user.

Interfaces. The major interfaces involved with the operation of the Low Cost Readout Stations are EOS Project Office to Local User, Operations Control Center to Local User, EOS-A and EOS-B Instrument Wideband Data Format to Low Cost Readout Stations, and equipment interfaces between the Basic Low Cost Readout Station and the Unique Local User Provided Equipment. These interfaces are as follows:

a. EOS Project Office to Local User Interface. The EOS Project Office is responsible for the review and approval of requests from the local users for transmission of image data from the EOS-A or EOS-B Satellites when over the local users area of interest. The request will be through a telephone line data-fax link.

b. Operations Control Center to Local User Interface. The Operations Control Center (OCC) is responsible for providing to the local user predicated ground antenna contact profiles as a function of time in the form of a computer listing for the satellite orbits over the local user coverage area. These profiles are based on the coordinates of the ground antenna and the nominal spacecraft orbit parameters.

   The OCC is also responsible for providing, periodically, coverage schedules to the local users for their areas of interest. The local user will in turn request transmission of image data from the EOS-A or EOS-B Satellites and specify the instrument type and where appropriate the mode of operation. Confirmation of the local user request will be in the form of predicted spacecraft acquisition time and position and period of transmission over

the requested area provided by the OCC. The exchange of data will be through a telephone line data-fax link.

c. Instrument Wideband Data Interface. The details of the instrument wideband data are delineated in the Wideband Communication and Data Handling Subsystem Description (Section 3.2.5 of this volume).

d. Equipment Interfaces. The interface between the basic Low Cost Readout Station and the unique local user equipment will be through an interface unit located in the Data Processing and Correction Subsystem. The interface media will be a buffered 16 bit parallel input/output word. This size word, being a multiple of 8, will be compatible with most input/output devices on the market. The detail interfaces will be defined when the specific local user equipment is identified.

4.4.2 BASELINE DESCRIPTION

The Low Cost Readout Station (LCRS) is comprised of a Data Acquisition Subsystem, a Data Processing and Correction Subsystem and a Data Display and Extractive Processing Subsystem. The Data Acquisition Subsystem and Data Processing and Correction Subsystem are standardized for all Low Cost Readout Stations while the Data Display and Extractive Processing subsystem, provided by the local user, are tailored to his requirements and therefore station unique. A block diagram of the Low Cost Readout Station is provided in Figure 4.4-1.

4.4.2.1 Data Acquisition Subsystem

The Data Acquisition Subsystem includes all components required to acquire, receive and record the instrument data transmitted from the EOS Satellites. The major components of this subsystem are delineated below:

Antenna and Drive. The antenna typically is a 1.8 m diameter X-band parabolic reflector in a mounting designed to withstand local environmental and weather conditions. The drive is sized to operate adequately with a 74 to 93 km/hr wind loading with resulting errors less than 0.3° in each plane. The drive will operate with this accuracy at rates up to about 0.6° per second. The control circuitry utilizes two digital servos with a tape drive. The

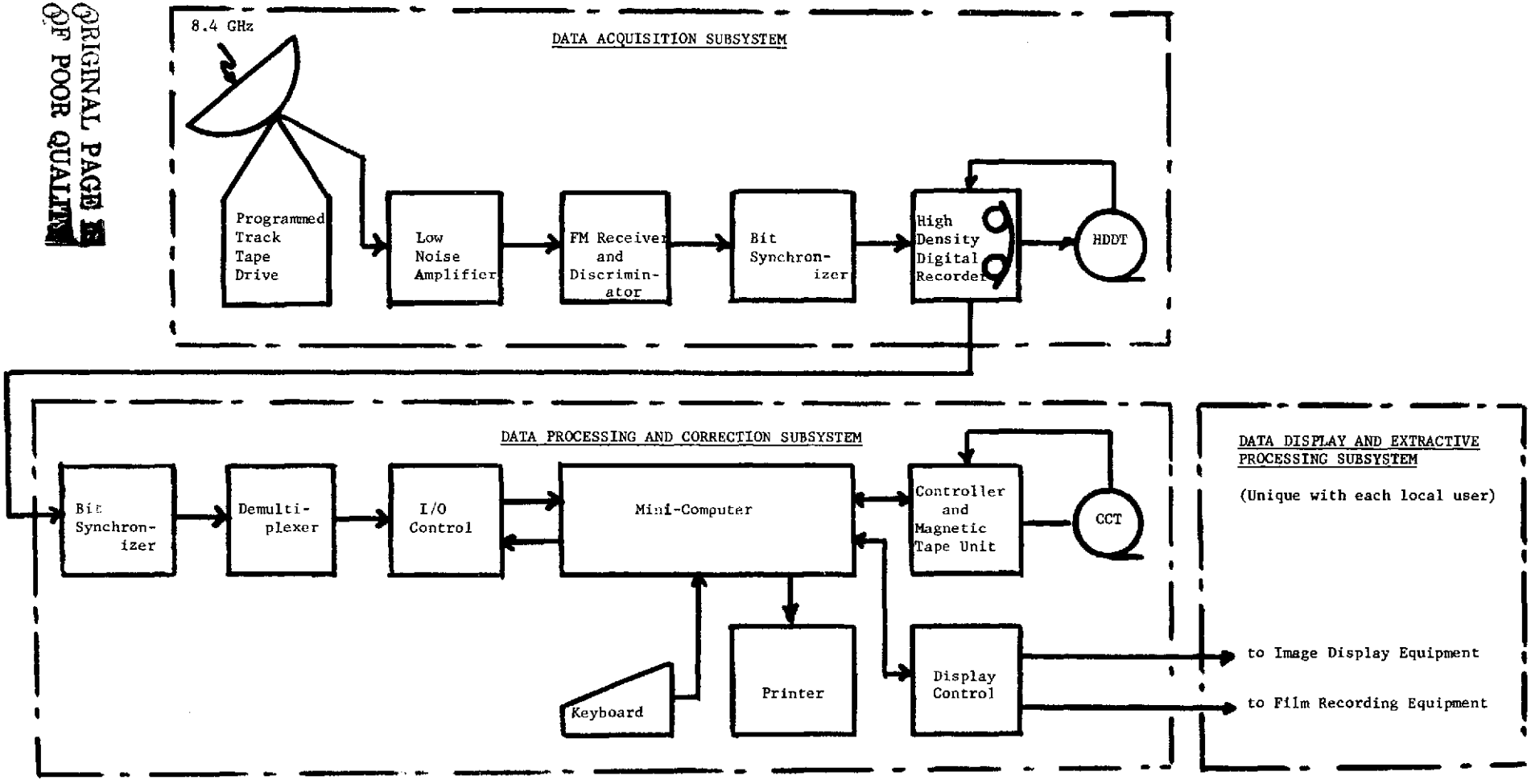

Figure 4.4-1. Low Cost Readout Station Block Diagram

angle pickoffs for the feedback loop use a coded disk which is commonly used in current programmed drive subsystems.

The X-band feed uses a circular polarization to conform to the signal transmitted from the spacecraft. The feed incorporates a heater in those areas where icing can be a problem. In general, the snow loading problem will be handled manually.

Five or more antenna drive tapes (one per orbit) are generated by the minicomputer, based on ground antenna contact profile information provided by the EOS Project Office via the OCC and utilized for subsequent orbits.

Low Noise Amplifier. The low noise amplifier is an X-band paramp with an effective noise figure of 150°K mounted in an antenna enclosure, with proper cooling and ventilation environment, to minimize the effect of the feed-to-LNA transmission line loss on the receiver effective noise figure.

Receiver. The receiver is a double conversion type with a tunable frequency range of about 10 MHz to accommodate the frequency instability of the MSS instrument and a fixed accurate frequency for the TM. The receiver i.f. is in the upper VHF region and has a discrimination demodulator.

Bit Synchronizer. The bit synchronizer accepts filtered or unfiltered noise contaminated serial PCM data of up to 20 Mb/s and reconstructs a clean signal. The synchronizer conditions the input signal utilizing dc coupled circuits with full range AGC and off-set corrections, synchronizes with the input signal transitions to generate output clock; reconstructs the data, and converts the reconstructed data to standard NRZ code. The input data is automatically corrected for amplitude changes using a voltage controlled amplifier. After correction, the signal is applied to matched filter whose band width is adjusted as a function of the selected bit rate and code. The matched filter provides two outputs: a bit value detector and a data transition detector. The transition detector output is used for automatic gain control as well as synchronization. Gain and offset correction is independent of clock synchronization and the tracking rates are controlled by the bit rate.

The clock generator is a precision voltage-controlled oscillator (VCO) whose center frequency is selectable. The matched filter transition detector output is compared with the clock in a phase detector. The phase detector develops the loop error voltage which is applied through a loop filter to the VCO. The bit value detector output is strobed by the clock to provide the reconstructed NRZ code and clock outputs. This unit is identical to the one presently employed in the NASA ERTS system.

High Density Digital Recorder. The High Density Digital Recorder (HDDR) is a 14 track direct record/reproduce device with decoder electronics and digital process electronics. The record electronics are required to multiplex the tracks and encode each track for recording, the playback electronics are required to bit, word, and frame synchronize and deskew the data. The HDDR permits repeated data playback at reduced speeds. The recorded data is reproduced in a serial data stream at rates dependent on the playback speed.

Eleven of the fourteen available tracks are used for data and the remaining three tracks carry auxiliary information (e.g., time code, voice annotation). The data is reproduced at lower than real time recording speeds with the serial bit data stream directed into the bit synchronizer of the Data Processing and Correction Subsystem.

4.4.2.2 Data Processing and Correction Subsystem

The Data Processing Subsystem includes all the components to process and control the instrument data recorded on the high density digital tape by the Data Acquisition Subsystem and produces output products in the form of computer compatible tapes (CCT's) and provide output data to the Data Display and Extractive Processing Subsystem for use in imagery display and film recording. The major components of this system are delineated below.

Bit Synchronizer. The bit sync accepts the playback serial PCM data and reconstructs a clock and a "clean" signal. The entire processing system relies on perfect clock sync. To decode each pulse, the synchronizer must synchronize accurately with the incoming pulse train to insure that the true pulse is being tested and that there is no drift into an adjacent pulse region. The bit sync is capable of up to 2 Mbps bit rates. The operation of this unit is identical to the one used in the Data Acquisition Subsystem.

Demultiplexer. The demultiplexer decommutates image and calibration data, time, line length and frame ID codes. Inputs to the Demux are a serial PCM data stream and clock signal from the bit synchronizer. The Demux is identical to the one presently employed in the NDPF facility for ERTS data processing.

Decommutating is done on a single band basis (tape playback is needed for each additional band); this is accomplished by selecting and outputting the particular detector(s) signal associated with the band of interest. For example, decommutation of MSS data is accomplished by selecting the video data from six of the thirty detectors corresponding to the spectral band of interest and outputting the information on six separate output lines. Each output represents data from a single detector in the spectral band. The detector outputs are directed to the I/O control for reformatting.

I/O Control. The I/O control provides the data reformatting function for the video data received from the demultiplexer and the buffering between the computer and the demultiplexer. The I/O employs two sets of six buffer registers. Each buffer stores one line (1 detector) of image data. The reason for using two sets of buffers is that a "ping-pong" technique is employed to output the data.

When loading of one buffer set is complete, loading commences for the other set and simultaneously the data is output from the previous set. In this manner as one group is loaded, the other is outputting the data. In effect, this technique provides a data rate reduction in addition to the HDDR speed reduction.

The I/O output to the computer is a byte stream on a detector by detector basis.

Mini-Computer. The mini-computer used in this subsystem has a 16 bit word length with 16,384 words of magnetic core with a cycle time of 0.8 microseconds. The structure of the central processor is such that it uses parallel, binary processors with single address instruction and fixed word length. The computer input/output word size is 16 bits of parallel transfer. This size, being a multiple of 8, can interface with most of the input and output devices on the market today.

Direct memory access channel (DMA) permits direct transfer of data between main storage and peripheral controllers. I/O data rate is a measure of the computer's speed

in transferring data to and from peripheral devices. A DMA channel maximum I/O rate equals the cycling rate of the main storage unit. In this case it is about 1.25 M word/sec.

Other effective features indicating the mini-computer power are program interrupts and a variable number of external interrupt levels.

Peripherals. The Keyboard/Printer provides operation control, error and status message reporting, and other communication between the computer and the user. The keyboard permits direct manual input to the computer; the printer automatically prints computer output in hard copy form; and the paper tape reader and punch on the device provides inexpensive input/output for the computer. The Keyboard/Printer is a stand-alone device consisting of a mechanism and a controller, which connects to an 8-bit I/O channel on the mini-computer system. Input to the device is via 62-character printing graphics with other non-printing characters used only for control. Characters entered on the keyboard are transmitted to the computer as 8-bit bytes to the printer, which prints one character for each byte received.

The printer is the peripheral device, controlled by the mini-computer, that receives the data results from the computer and provides a formatted printed copy at a relatively high printing rate. It consists of a line printer and controller in a single independent cabinet. The printer controller provides for a single line printer device and may be connected to only one I/O channel. Using a character set that consists of 56 graphics plus a blank, the printer is capable of printing 132 columns of information. Graphics are permanently embossed on a rotating print drum, and print hammers are provided for each of the 132 columns that constitute a printed line. Buffering is provided to prevent the line printer from tying up the computer's input/output system while a line of characters is being printed. The printer accepts a full line (132 characters) at one time from the computer. Output of the printer is a printed page formatted by instructions from the mini-computer.

Controlled Magnetic Tape Unit. The control unit initiates status information transfers to the computer for input/output of data to the MTU. The magnetic tape unit (MTU) available with the mini-computer uses a standard 1/2 inch tape in IBM compatible 9-track format. Typical data transfer rates are about 120 K characters per second with a total

storage capacity of about 80 million characters. These are achieved with tape speeds of 75 ips and packing density of 1600 characters per inch. HDDR tape playback speed reduction ratios are used to provide transfer data speeds which the unit can handle. The MTU uses a simple capstan drive design with air bearings to assure that nothing touches the oxide recording surface of the tape itself except the read/write head. Output from the tape to the computer is accomplished via a "Read Order" which transmits the data from the magnetic tape into the computer memory. This unit uses the buffered input/output computer channel.

Display Control. Digital signals from the mini-computer are applied to the display control unit. Because of throughput properties of display systems and film recorders, the digital signal from the mini-computer is appropriately formatted and buffered before it reaches these equipments. Depending on specific user equipment, such functions as start, stop, advance are performed automatically within the display control.

Software. The computer system, to support the baseline Low Cost Readout Station, will provide process control, operations support and utility support functions.

a) Process Control Functions

Two modes of production process control are included:

1) High Density Digital Tape (HDDT) to Computer Compatible Tape (CCT) and user option display;
2) CCT to film process.

For the HDDT to CCT process mode, a radiometric correction function is also provided. The two production modes are controlled by ancilliary time code data. The output data will be identified for proper cataloging.

The realtime process control functional requirements are to process the data one band at a time, by consecutive lines (detector/sensor). The operations required for a line of data are:

1) Input the ancilliary and sensor data
2) Compute a radiometric correction table using calibration coefficients. This function is performed in the HDDT to CCT mode.

3) Radiometrically correct the sensor data. This function is performed in the HDDT to CCT mode.

4) Control, format and direct the output media.

5) Monitor peripheral status

b) Operations Support Function

The Data Acquisition Subsystem requires information to program the antenna during image passes. The control computer will provide this data on punch paper tape based on the ground antenna contact profile provided by the OCC. The control computer system will be designed to generate and maintain a data base to provide all the necessary information for acquisition, process control and output cataloguing requirements.

c) Utility Support Function

The control computer system will include the necessary software for system and program update and maintenance as provided by the computer vendor. Standard utility functions for dumping and hardware/software trouble shooting are provided for system integrity.

4.4.2.3 Data Display and Extractive Processing Subsystem

The Data Display and Extractive Processing Subsystem is unique to each local user. Data outputs are provided by the display control in formats applicable to each subsystem. The primary functions performed by this subsystem are:

1) Image Display

2) Photographic Film

3) Image Analysis

4.4.3 OPERATIONS

The major phases associated with the operation of the Low Cost Readout Station are prepass coordination, data acquisition, data processing and correction, and data display and film image generation.

4.4.3.1 Prepass Coordination

Based on the satellite land coverage schedules provided periodically by the OCC, the local user will submit a request to the EOS Project Office for transmission of image data over his area of interest and specify the instrument type and mode of operation. The request should be forwarded to EOS Project Office approximately 5 days prior to the actual satellite pass. Upon approval of the request, the EOS Project Office will forward the request in form of a requirement to the Ground Data Handling System. Predicted satellite acquisition time, position and period of transmission over the requested area will be provided to the local user by the OCC a minimum of 4 hours prior to the planned image pass.

4.4.3.2 Data Acquisition

Prior to the planned satellite image pass over the Low Cost Readout Station, the Data Acquisition Subsystem will be checked-out using procedures, test signals and monitoring points integral to the operation of the Data Acquisition Subsystem. The punched paper tape corresponding to the planned satellite image pass is selected and mounted on the tape reader on the antenna drive unit. (Note: A separate tape is required for each orbit corresponding to the various passes over the coverage area. These tapes are generated prior to the pass by the Data Processing and Correction Subsystem based on ground antenna contact profile information provided by the OCC. These tapes will be reusable for repeated corresponding orbits as long as the satellites are maintained within their pre-established margins.)

The antenna is prepositioned to the predicted satellite position and tracking initiated at a predetermined time using a countdown clock with an accuracy of one second. The antenna will follow the programmed instructions and the tracking error of the servo loops are monitored during the predicted tracking interval to verify performance of the antenna drive unit.

The low noise amplifier and the FM receiver and discriminator are verified and tuned by a test signal inserted into the low noise amplifier while observing the DC component of the discriminator.

Upon successful completion of the simulated run, the antenna is repositioned to the predicted satellite position for the actual image pass and tracking initiated at the predicted acquisition time. The high density digital recorder is also turned on just prior to the initiation of tracking for recording of the 15 Mb/s image data. The image data is received, demodulated and recorded directly on the high density digital tape recorder. Upon completion of the image pass, the operator will shut down the Data Acquisition Subsystem.

4.4.3.3 Data Processing and Correction

Processing and correction of the recorded image data can start immediately after the completion of the pass. The high density digital tape is rewound to the start of the image pass and the spectral band to be processed is selected. The high density digital recorder is switched to the playback mode and the serial PCM recorded data is played back at a reduced rate compatible with the computational capability of the mini-computer to perform the radiometric corrections and the number of spectral bands contained on the HDDT. The data is forwarded to the bit synchronizer which reconstructs the clock and data signals.

The data is then demultiplexed and the data for each detector output on a separate line to the I/O Control when it is reformatted to produce independent line imagery for each spectral band. In the MSS processing the I/O uses two sets of 6 buffer registers. Each buffer stores a line of image data (1 detector). When the loading of one set of buffers is complete, the loading of the other set commences and simultaneously the data from the first set is output. The output is on a line per detector basis. This format simplifies the follow-on processing and is in a format which can be used by a display system. In addition, this buffering provides a data rate reduction in addition to the HDDR speed reduction.

The mini-computer performs radiometric correction of the data. The radiometric corrections are similar to those applied to MSS data in the ERTS data processing system. Gain and offset terms are calculated and applied to the data on an element by element basis across the entire image. These gain and offset terms are predetermined to produce a uniform image of given intensity from an input scene of uniform calibrated radiance. To compensate for gradual drift, means are provided to periodically update the values of these gain and offset terms, thus maintaining radiometric fidelity of the

image. The radiometrically corrected data is formatted and recorded on a CCT via the MTU. The process is then repeated for each spectral band of image data contained on the HDDT.

4.4.3.4 Data Display and Film Image Generation

At the local user's option the images can be displayed simultaneously with the generation of the CCT's discussed above through the display control unit to the local users' display equipment. It can also be reconstructed at a later time from the CCT's. In the latter mode, the CCT is played back at the recorded rate under the control of the mini-computer and the data is output thru the display control to the local users' display equipment.

Generation of the film image will be performed after the CCT is produced. The CCT is played back under the control of the mini-computer at a reduced rate (compatible with the local users' film image generation equipment) and output to the display control unit in the proper format to produce film imagery. The film images can then be developed for use by the local users.