NASA Technical Paper 1076

Spin-Tunnel Investigation of the Spinning Characteristics of Typical Single-Engine General Aviation Airplane Designs

II - Low-Wing Model A: Tail Parachute Diameter and Canopy Distance for Emergency Spin Recovery

Sanger M. Burk, Jr., James S. Bowman, Jr.,
and William L. White

NOVEMBER 1977

NASA

NASA Technical Paper 1076

Spin-Tunnel Investigation of the Spinning Characteristics of Typical Single-Engine General Aviation Airplane Designs

II - Low-Wing Model A: Tail Parachute Diameter and Canopy Distance for Emergency Spin Recovery

Sanger M. Burk, Jr., James S. Bowman, Jr.,
and William L. White

Langley Research Center
Hampton, Virginia

NASA
National Aeronautics
and Space Administration

Scientific and Technical
Information Office

1977

SUMMARY

An investigation has been conducted in the Langley spin tunnel on a 1/11-scale model of a research airplane typical of low-wing, single-engine, light general aviation airplanes to determine the tail parachute diameter and canopy distance (riser length plus suspension-line length) required for emergency spin recovery. Nine tail configurations were tested, resulting in a wide range of developed spin conditions, including steep spins and flat spins.

The results of the study indicated that the full-scale parachute diameter required for satisfactory spin recovery from flat spins was approximately 3.2 m (10.5 ft). A parachute diameter of about 2.9 m (9.5 ft) was required for recovery from steep spins. A slightly smaller parachute was sufficient when a ventral fin was attached to the model. The canopy distance, which was critical for flat spins, should be between 4.6 and 6.1 m (15 and 20 ft) to insure recovery from both flat and steep spins.

INTRODUCTION

Federal aviation regulations (ref. 1) require general aviation manufacturers to demonstrate, by means of full-scale flight tests, compliance with requirements for satisfactory stall and spin characteristics for airplanes in the normal, utility, and acrobatic categories. During these spin demonstrations, the airplane generally is equipped with a tail-mounted spin-recovery parachute system which serves as an emergency recovery device in the event that the spin cannot be terminated by the use of airplane control surfaces.

Although spin-recovery parachutes have been used for many years for this purpose on light airplanes, the technology required for the selection of the parachute geometry - canopy diameter and canopy distance (riser length plus suspension-line length) - is very limited and poorly documented. In addition, very few systematic studies of parachute systems have ever been conducted for this class of airplane. Some limited information on spin-recovery parachutes that may be applicable to light airplanes is reported in references 2 to 6. As a result of the lack of design information, the selection of the parachute geometry is difficult, and spin accidents continue to occur during spin evaluation tests because of improper parachute diameter and/or canopy distance.

In view of the existing void in technology for the design of emergency spin-recovery parachute systems for light airplanes, a research program has been initiated to determine the parachute diameter and canopy distance required for several typical airplane configurations, including low-wing, high-wing, and single- and twin-engine designs. Tests on more than one low-wing and high-wing design are planned. This program is part of an extensive research program being conducted by the Langley Research Center incorporating spin-tunnel tests, radio-controlled-model tests, and airplane flight tests to study the stall and spin characteristics of light general aviation airplanes. The present investigation was conducted in the Langley spin tunnel to determine the parachute requirements for a low-wing, single-engine configuration. The model was tested with nine different tail configurations, which resulted in a wide range of developed spin characteristics for evaluation of the effectiveness of the spin-recovery parachutes. A previous spin-tunnel study of the effects of tail configuration on the spin and spin-recovery characteristics of the model is reported in reference 7.

SYMBOLS

Dimensional quantities are presented both in the International System of Units (SI) and in the U.S. Customary Units. Measurements were made in the U.S. Customary Units, and equivalent SI dimensions were determined by using the conversion factors given in reference 8.

b	wing span, m (ft)
$\bar{c}$	mean aerodynamic chord, cm (in.)
d	canopy distance (distance from skirt of uninflated parachute canopy to attachment point on airplane; equal to riser length plus parachute suspension-line length), m (ft)
I_X, I_Y, I_Z	moment of inertia about X, Y, and Z body axis, respectively, kg-m^2 (slug-ft^2)
$\frac{I_X - I_Y}{mb^2}$	inertia yawing-moment parameter
$\frac{I_Y - I_Z}{mb^2}$	inertia rolling-moment parameter
$\frac{I_Z - I_X}{mb^2}$	inertia pitching-moment parameter
m	mass of airplane, kg (slugs)
S	wing area, m^2 (ft^2)
V	full-scale rate of descent, m/sec (ft/sec)
x	distance of center of gravity rearward of leading edge of mean aerodynamic chord, m (ft)
z	distance between center of gravity and fuselage reference line (positive when center of gravity is below line), m (ft)
α'	angle between fuselage reference line and vertical (approximately equal to angle of attack at plane of symmetry), deg

μ	airplane relative-density coefficient, $m/\rho Sb$
ρ	air density, kg/m^3 (slugs/ft^3)
Ω	full-scale angular velocity about spin axis, rps

MODEL

General Description

A 1/11-scale model of a research airplane considered typical of low-wing, single-engine, light general aviation airplane designs was used for the spin-recovery parachute tests. A three-view drawing and a photograph of the model are shown in figures 1 and 2, respectively. The dimensional characteristics of the model in terms of the corresponding full-scale values are presented in table I.

The model was previously tested (ref. 7) with a large number of tail configurations to determine the effects of tail design on spin characteristics. The same tail configurations used in that investigation were also used in the present study. The tail unit of the model was removable, and nine different tail configurations were tested. The nine tail configurations, which are shown in figure 3, included variations in the vertical and longitudinal locations of the horizontal tail; partial- and full-span rudders; and a ventral fin. Dimensions of the ventral fin used in the present tests and a sketch of typical locations of the ventral fin for tail configurations with partial- and full-span rudders are shown in figure 4.

A radio-control system was used to actuate a servomechanism installed in the model to deploy the parachute. Initial tests with landing gear installed on the model indicated negligible effect on the spin and recovery characteristics, which is in agreement with results presented in reference 9; the gear was therefore removed for the remainder of the test program. The aerodynamic and gyroscopic effects of propeller operation were not simulated on the model.

Spin-Recovery Parachutes

The spin-recovery parachutes used in the spin-tunnel tests were made of nylon and were of the solid, flat type. The diameters of the parachute canopies presented herein are the laid-out-flat diameters. Solid, flat-type parachutes normally are unstable unless the canopy porosity is 400 or greater to make it stable. Thus the parachute canopy material used in this investigation had a porosity number of 400; this number indicates that approximately 11 m^3 (400 ft^3) of air will pass through 0.09 m^2 (1 ft^2) of the canopy cloth per minute under a pressure equivalent to that of a 1.27-cm (0.50-in.) column of water. The drag coefficient of the parachutes, based on the laid-out-flat areas, was approximately 0.50. The drag coefficients were determined by testing the parachutes in the Langley spin tunnel.

A spin-recovery parachute must be reasonably stable so that it will tend to trail with the relative wind at the rear of the spinning airplane and thus apply a yawing moment that is always antispin. An unstable parachute which has large oscillations may apply a yawing moment which varies from antispin to prospin and thereby retard the recovery. Information relating to the stability of parachutes is presented in references 5 and 6. As pointed out in reference 6, solid, flat parachutes such as those used in the present study are normally unstable but can be made stable by using high-porosity material, as was done in the present study. For full-scale application, stable parachutes are usually obtained by geometric porosity such as used in ring-slot or ribbon parachutes.

The tests were devised to determine only the parachute diameter and canopy distance required for satisfactory spin recovery. No attempt was made to simulate a full-scale deployment technique because of size limitations on the model.

TEST CONDITIONS

The tests were performed in the Langley spin tunnel. Reference 10 describes the spin tunnel and the testing technique. A summary of the technique is given in the appendix of the present report for the convenience of the reader. The technique involves hand launching the model into the vertical airstream of the tunnel in both flat and steep attitudes with spin rotation preapplied and allowing the model to enter an equilibrium condition or conditions, since there may be several spin modes possible for a particular configuration and mass loading. A photograph of the model in the tunnel with the parachute deployed is shown in figure 5.

The model was ballasted to obtain dynamic similarity for an altitude of 3000 m (10 000 ft) with a value of relative-density coefficient μ of 11.0. The mass characteristics and mass parameters for the loading conditions tested on the model have been converted to corresponding full-scale values and are presented in table II. The value of the inertia yawing-moment parameter $(I_X - I_Y)/mb^2$ for the present tests was -50×10^{-4}. The precision of the measurements of the spin characteristics is given in the appendix.

The maximum control deflections of the model (measured perpendicular to the hinge lines) are.

Rudder deflection, deg	25 right, 25 left
Elevator deflection, deg	25 up, 15 down
Aileron deflection, deg	25 up, 20 down

Since the parachute is used for emergency spin recovery, it is sized to effect a recovery from any spin condition and any adverse control input. In the model tests, therefore, the recoveries are attempted by deploying only the parachute, and the controls remained fixed for an adverse spin condition. (In this case, the criterion spin control setting, described in the appendix, was used.) Thus, the spin recovery is due to the parachute action alone. For satisfactory spin recovery, the parachute must effect recovery of the model within

$2\frac{1}{4}$ turns or less. This value has been selected on the basis of past experience in correlating model and full-scale results.

The parachute diameter and the canopy distance required for emergency spin recovery were determined for all tail configurations and spin modes. Inasmuch as the results for right and left spins were generally similar, the data are arbitrarily presented in terms of right spins.

The Reynolds number, based on the mean aerodynamic chord of the wing, was approximately 50 000 for all the tests. Past experience with parachute model tests in the spin tunnel has indicated that good agreement has been obtained with results of full-scale parachute tests despite the low Reynolds number of the model tests.

RESULTS OF TESTS

Presentation of Results

Before the results of the present investigation with the spin-recovery parachutes are presented, the results of a previous spin-tunnel investigation (ref. 7) which was conducted on the same model and tail configurations are discussed briefly to illustrate the types of spin modes exhibited by the model. Those tests produced a wide variety of spin and recovery characteristics, and a summary of the results is presented in table III. The spin attitude ranged from steep ($\alpha' = 29^\circ$) to flat ($\alpha' = 81^\circ$), and the spin rate ranged from approximately 1 second per turn, full scale, to 2.7 seconds per turn. Also, when recovery was attempted by rudder reversal only, the spin-recovery characteristics were satisfactory for some of the tail configurations and unsatisfactory for others.

The results of the tests to determine the size of tail parachute and the canopy distance required for emergency spin recovery for each tail configuration and each spin mode are presented in figures 6, 7, 8, and 9. Figure 10 illustrates the effect of parachute canopy distance for a flat spin. Experience had indicated that parachute diameter is more directly related to the spin mode rather than to tail design; and to prevent an erroneous application of the results to a similar tail configuration on a different airplane design, the parachute results for the individual tail configurations are not indicated in these figures.

Effect of Parachute Diameter

The results of tests to determine the parachute diameter required for recovery from both the flat and steep spin modes of the model for all tail configurations are presented in figure 6. The data presented indicate the number of turns required for recovery by the parachute action alone. Satisfactory and unsatisfactory recoveries are presented as well as the spins in which the model struck the safety net before recovery could be effected (square solid symbols).

The data indicate that a slightly larger parachute is required for recovery from the flat spin modes than from the steep spin modes. A parachute diameter of 3.0 to 3.4 m (10 to 11 ft) would be required for recovery from the flat spin modes. This size was selected because parachute diameters less than 3.0 m were judged to give results too close to the boundary, and parachute diameters larger than 3.4 m offered little if any improvement in the number of turns for recovery.

For the steep spin modes, the results of figure 6 indicate that a parachute diameter of 2.7 to 3.0 m (9 to 10 ft) would be adequate to effect a satisfactory spin recovery for all tail configurations tested. This parachute-diameter range was chosen because parachutes smaller than 2.7 m in diameter showed a decay in effectiveness for spin recovery, and parachutes larger than 3.0 m in diameter did not show appreciably increased effectiveness.

It might be assumed that the parachute diameter required for recovery from a flat spin would be considerably larger than that required for recovery from a steep spin, because recovery by use of aerodynamic controls is generally much more difficult from a flat spin than from a steep spin. However, the results of the present tests indicate that the parachute diameters required for recovery from the steep spin modes of all the tail configurations were not appreciably smaller than the parachute diameters required for recovery from the flat spin modes (2.7 to 3.0 m (9 to 10 ft) for steep spins and 3.0 to 3.4 m (10 to 11 ft) for flat spins). This result can be explained in terms of the difference in the characteristics of the flat and steep spin, both of which require an antispin yawing moment to stop the spin.

A flat spin is primarily a yawing motion, which results in a large local angle of sideslip at the tail. Since the parachute aligns with the relative wind, it produces a force in the horizontal plane which results in an antispin yawing moment. The larger the sideslip angle, the greater will be the antispin yawing moment produced by the parachute.

In contrast to the flat spin, most of the spinning motion in a very steep spin ($\alpha' \approx 25^\circ$ to 30°) is a rolling motion due to the steep attitude of the airplane, and the sideslip at the tail is relatively small. Therefore, the yawing-moment component available from the parachute force to stop the spinning motion of a steep spin is relatively small compared with that for the flat spin. For example, in a steep spin the rate of descent is higher and the spin rate slower than the rates encountered in a fast, flat spin. Thus, in the present investigation, the sideslip angle at the tail of the model was about 15° for the steep spin mode but about 45° for the fast, flat spin mode.

It might be thought that another factor that could contribute to the antispin yawing moment being generated by the parachute in the flat spin mode would be the long moment arm between the spin axis (usually near the center of gravity) and the parachute attachment point at the tail. Normally, it might be expected that this moment arm would be larger than that obtained in a steep spin, since in a steep spin the fuselage is inclined about 45° or less to the spin axis and thus the length of the moment arm projected into the horizontal plane would seem to be shorter than that in a flat spin. However, the moment arms for the flat and steep spin modes are approximately the same because the spin axis moves forward as the spin attitude gets steeper. The spin axis is located approximately at the center of gravity for a flat spin and approximately between the engine and cockpit for the steep spin ($\alpha' \approx 45^{\circ}$). Therefore, the length of the moment arm in a flat or steep spin apparently is not a factor in the determination of the parachute size for spin recovery.

The results of parachute tests for the steep spin modes with a ventral fin added to the tail configuration are presented in figure 7. These results are presented in terms of full-scale values and indicate that when the ventral fin is on, the parachute diameter required for recovery is slightly smaller (2.4 to 2.7 m (8 to 9 ft)) than when the ventral fin is off.

It might be anticipated from the results of figure 7 that with the addition of the ventral fin to the model (which resulted in an increase in tail damping), the size of the parachute required for recovery would always be smaller than that required when the ventral fin is off. Such an assumption is correct provided the ventral fin is large enough to improve the basic spin characteristics of the airplane. For tail configurations which produced both flat and steep spin modes, as well as for tail configurations which produced only steep spin modes, the required parachute size was slightly smaller. When flat spin conditions were obtained on the model, a parachute diameter of 3.0 to 3.4 m (10 to 11 ft) was required for satisfactory spin recovery; whereas when a ventral fin of suitable size was added to the model, the flat spin was eliminated and recovery from the resulting steep spin could be accomplished with a smaller parachute (2.4 to 2.7 m (8 to 9 ft) in diameter).

For tail configurations which produced only steep spins, a parachute diameter of approximately 2.7 to 3.0 m (9 to 10 ft) was sufficient for satisfactory spin recovery. As previously mentioned, adding the ventral fins reduced the required parachute size (2.4 to 2.7 m (8 to 9 ft) in diameter) for satisfactory spin recovery.

Effect of Canopy Distance

The distance between the parachute canopy and the attachment point on the airplane is as important as the proper parachute diameter, especially for a flat spin mode. This distance, referred to as canopy distance d, is equal to the riser length plus the suspension-line length. When the canopy distance is correct (fig. 10(a)), regardless of the spin mode, the riser is straight and taut and the parachute trails approximately with the relative wind, applying both a yawing and a pitching moment.

If the canopy distance is too short (fig. 10(b)), the parachute canopy may be too close to the airplane, and the wake from the airplane can interfere with the operation of the parachute; in some cases, the wake can cause the parachute canopy to collapse. If the canopy distance is too long (fig. 10(c)), the parachute will trail above the airplane on the spin axis and produce primarily pitching moment and little or no yawing moment, which is the principal moment needed for spin recovery. The airplane attitude may steepen, but a new equilibrium condition will be obtained and the model will continue to spin.

The results of the tests to determine the effects of canopy distance are presented in terms of full-scale values in figures 8 and 9. Some of the aforementioned trends are indicated by the results presented in figure 8 for the flat spin mode. For example, a canopy distance greater than about 6.7 m (22 ft) causes the turns for recovery to increase, and canopy distances greater than 9.1 m (30 ft) result in no recovery. For canopy distances shorter than about 4.6 m (15 ft), the turns for recovery start to increase, and the effect of the airplane wake on the parachute canopy can become significant. On the basis of these results it appears that a canopy distance of about 4.6 to 6.1 m (15 to 20 ft) should be used for flat spin modes.

The effect of canopy distance on the turns for recovery for the steep spin modes is presented in figure 9. The results indicate that the canopy distances were not as critical as for the flat spin mode, especially the maximum distance. For example, the canopy distance for the steep spin modes may be as long as 12.2 m (40 ft) and as short as 4.6 m (15 ft) and still produce satisfactory spin recoveries. However, since the previously discussed canopy distances for the flat spin modes are very effective for steep spin modes also, it is recommended that the distances required for the flat spin modes be used.

INTERPRETATION OF RESULTS

Specific results of spin-tunnel tests cannot always be applied directly to corresponding full-scale conditions. It is necessary to evaluate the spin-tunnel data with a background knowledge of previous spin programs for which spin tunnel and full-scale results have been correlated. Thus, spin-tunnel model results are not interpreted rigidly for a specific control setting, mass loading, or dimensional configuration; rather they are interpreted in terms of a range of results obtained for the combination of mass characteristics, dimensional characteristics, and control settings under investigation by determining the extent to which moderate variations in these factors can alter the results. Past experience with model parachute tests in the spin tunnel, as previously mentioned, have indicated that good agreement has been obtained with results of full-scale tests.

Spin-tunnel model tests have historically predicted all the spin modes possible for the corresponding airplane and the recommended parachute is always sized to provide good recoveries from the most critical spins. The parachute size is always given in terms of a diameter and a drag coefficient.

The drag coefficient of the solid, flat parachute used in the present investigation, as previously mentioned, was approximately 0.50. If another type of parachute is selected and if the drag coefficient is different, the size of the parachute may have to be changed. Fabric porosity, geometric porosity, canopy shape, and suspension-line length are some of the factors that can affect the drag coefficient and must be considered when selecting a parachute. For a more detailed discussion of these factors, see reference 11.

Because of model size limitations in the present investigation, it was not possible to simulate a full-scale parachute deployment technique. For the spin-tunnel tests, the parachute was deployed into the airstream and the turns for recovery counted from the time the parachute was fully inflated to the time the spin rotation ceased. Information on full-scale parachute deployment techniques is reported in reference 12. Although these deployment techniques are discussed in relation to military airplanes, certain basic principles involved with the deployment techniques - such as selection of the method of deploying the pilot parachute as well as the main parachute - are applicable to light airplanes.

SUMMARY OF RESULTS

An investigation has been conducted in the Langley spin tunnel on a 1/11-scale model of a low-wing, single-engine, general aviation research airplane to determine the tail parachute diameter and canopy distance required for emergency spin recovery. The results are summarized as follows:

1. The parachute diameter required for satisfactory spin recovery from flat spins was 3.0 to 3.4 m (10 to 11 ft), full scale.

2. For steep spins on the model, a parachute diameter of 2.7 to 3.0 m (9 to 10 ft), full scale, was required.

3. A slightly smaller parachute was sufficient when a steep spin resulted from adding a ventral fin to the model.

4. The canopy distance (riser length plus suspension-line length) was critical for flat spins, but was not critical for steep spins. This distance should be between 4.6 and 6.1 m (15 and 20 ft), full scale, for flat spins and this distance also is satisfactory for steep spins.

Langley Research Center
National Aeronautics and Space Administration
Hampton, VA 23665
October 18, 1977

APPENDIX

TEST METHODS AND PRECISION

Model Testing Techniques

General descriptions of model testing techniques, methods of interpreting test results, and correlation between model and airplane results are presented in reference 10.

Spin-tunnel tests are usually performed to determine the spin and recovery characteristics of a model for the normal control configuration for spinning (elevator full up, lateral controls neutral, and rudder full with the spin) and for various other lateral control and elevator combinations, including neutral and maximum settings of the surfaces. Recovery is generally attempted by rapid full reversal of the rudder, or by rapid full reversal of both rudder and elevator. Recovery techniques are varied because the control manipulation required for recovery is primarily dependent on the mass distribution and geometric characteristics of the model (ref. 10).

Tests are also performed to evaluate the possible adverse effects on recovery of small deviations from the normal control configuration for spinning. For these tests, the elevator is initially set at either full-up deflection or two-thirds of its full-up deflection, and the lateral controls are set at one-third of full deflection in the direction that is conducive to slower recoveries, which may be either against the spin (stick left in a right spin) or with the spin, depending primarily on the mass characteristics of the particular model. Recovery is attempted by rapidly reversing the rudder from full with the spin to only two-thirds against the spin, by simultaneous rudder reversal to two-thirds against the spin and movement of the elevator to either neutral or two-thirds down, or by simultaneous rudder reversal to two-thirds against the spin and stick side movement to two-thirds with the spin. This control configuration and manipulation is referred to as the "criterion spin," with the particular control settings and manipulation used being primarily dependent on the mass distribution and geometric characteristics of the model.

Turns for recovery are measured from the time the controls are moved to the time the spin rotation ceases. Recovery characteristics of a model are generally considered satisfactory if recovery attempted from the criterion spin in any of the manners previously described is accomplished within $2\frac{1}{4}$ turns. This value has been selected on the basis of full-scale-airplane spin-recovery data that are available for comparison with corresponding model test results.

For spins in which a model has a rate of descent in excess of that which can readily be obtained in the tunnel, the rate of descent is recorded as greater than the velocity at the time the model hit the safety net. For example, a typical value might be >91 m/sec (>300 ft/sec), full scale. In such tests, the recoveries are attempted before the model reaches its final steeper attitude and while it is still descending in the tunnel. Such results are considered conservative; that is, recoveries are generally not as fast as they would be if the model could reach its final steeper attitude. For recovery attempts in which a model strikes the safety net while it is still in a spin, the recovery attempts are recorded as greater than the number of turns from the time the controls were moved to the time the model struck the net, for example >3. A >3-turn recovery, however, does not necessarily indicate an improvement over a >7-turn recovery. A recovery in 10 or more turns is indicated by the symbol ∞.

Precision

Results determined in free-spinning tunnel tests are believed to be true values given by models within the following limits:

α', deg	±1
Angle between span axis of wing and horizontal, ϕ, deg	±1
V, percent	±5
Ω, percent	±2
Turns for recovery obtained from motion-picture records	$\pm\frac{1}{4}$
Turns for recovery obtained visually	$\pm\frac{1}{2}$

The preceding limits may be exceeded for certain spins in the tunnel because of the high rate of descent or because of the wandering or oscillatory nature of the spin.

The accuracy of measuring the weight and mass distribution of models is believed to be within the following limits:

Weight, percent	±1
Center-of-gravity location, percent $\bar{c}$	±1
Moments of inertia, percent	±5

Controls are set within an accuracy of $\pm 1^{\circ}$.

REFERENCES

1. Airworthiness Standards: Normal, Utility, and Acrobatic Category Airplanes. Federal Aviation Regulations, vol. III, pt. 23, FAA, Feb. 14, 1975.

2. Seidman, Oscar; and Kamm, Robert W.: Antispin-Tail-Parachute Installations. NACA RB, Feb. 1943.

3. Kamm, Robert W.; and Malvestuto, Frank S., Jr.: Comparison of Tail and Wing-Tip Spin-Recovery Parachutes as Determined by Tests in the Langley 20-Foot Free-Spinning Tunnel. NACA ARR L5G19a, 1946.

4. Malvestuto, Frank S., Jr.: Method of Estimating the Minimum Size of a Tail or Wing-Tip Parachute for Emergency Spin Recovery of an Airplane. NACA RM L8D27, 1948.

5. Scher, Stanley H.; and Gale, Lawrence J.: Wind-Tunnel Investigation of the Opening Characteristics, Drag, and Stability of Several Hemispherical Parachutes. NACA TN 1869, 1949.

6. Scher, Stanley H.; and Draper, John W.: The Effects of Stability of Spin-Recovery Tail Parachutes on the Behavior of Airplanes in Gliding Flight and in Spins. NACA TN 2098, 1950.

7. Burk, Sanger M., Jr.; Bowman, James S., Jr.; and White, William L.: Spin-Tunnel Investigation of the Spinning Characteristics of Typical Single-Engine General Aviation Airplane Designs. I - Low-Wing Model A: Effect of Tail Configurations. NASA TP-1009, 1977.

8. Mechtly, E. A.: The International System of Units - Physical Constants and Conversion Factors (Second Revision). NASA SP-7012, 1973.

9. Gale, Lawrence J.: Effect of Landing Flaps and Landing Gear on the Spin and Recovery Characteristics of Airplanes. NACA TN 1643, 1948.

10. Neihouse, Anshal I.; Klinar, Walter J.; and Scher, Stanley H.: Status of Spin Research for Recent Airplane Designs. NACA TR R-57, 1960. (Supersedes NACA RM L57F12.)

11. American Power Jet Co.: Performance of and Design Criteria for Deployable Aerodynamic Decelerators. ASD-TR-61-579, U.S. Air Force, Dec. 1963. (Available from DDC as AD 429 921.)

12. Burk, Sanger M., Jr.: Summary of Design Considerations for Airplane Spin-Recovery Parachute Systems. NASA TN D-6866, 1972.

TABLE I.- DIMENSIONAL CHARACTERISTICS OF CORRESPONDING FULL-SCALE AIRPLANE

Overall length with tail 3, m (ft)	5.83 (19.14)
Wing:	
Span, m (ft)	7.46 (24.46)
Area, m^2 (ft^2)	9.11 (98.11)
Root chord, cm (in.)	121.92 (48.0)
Tip chord, cm (in.)	121.92 (48.0)
Mean aerodynamic chord, cm (in.)	121.92 (48.0)
Leading edge of $\bar{c}$, distance rearward of leading edge of root chord, cm (in.)	0
Aspect ratio	6.10
Dihedral, deg	5.0
Incidence	
Root, deg	3.5
Tip, deg	3.5
Airfoil section	NACA 64_2-415 (modified)
Horizontal tail:	
Span, m (ft)	2.34 (7.66)
Incidence, deg	-3.0
Airfoil section	NACA 65_1-012
Vertical tail:	
Airfoil section	NACA 65_1-012

TABLE II.- MASS CHARACTERISTICS AND INERTIA PARAMETERS OF LOADINGS TESTED ON THE MODEL

[Values given are full scale; moments of inertia are given about center of gravity]

Loading number	Weight, N (lb)	Center-of-gravity location		Relative-density coefficient, μ, at -		Moments of inertia, kg-m^2 (slug-ft^2)			Mass parameters		
		$x/\bar{c}$	$z/\bar{c}$	Sea level	3000 m (10 000 ft)	I_X	I_Y	I_Z	$\frac{I_X - I_Y}{mb^2}$	$\frac{I_Y - I_Z}{mb^2}$	$\frac{I_Z - I_X}{mb^2}$
1	6672 (1500)	0.255	0.048	8.2	11.0	606 (447)	794 (586)	1268 (935)	-50×10^{-4}	-125×10^{-4}	175×10^{-4}
2	6672 (1500)	0.145	0.048	8.2	11.0	606 (447)	794 (586)	1268 (935)	-50×10^{-4}	-125×10^{-4}	175×10^{-4}

TABLE III.- SUMMARY OF SPIN AND RECOVERY CHARACTERISTICS OF MODEL FOR THE CRITERION SPIN CONTROL CONDITION

[Center of gravity of $0.255\bar{c}$; recovery attempted by rudder reversal only]

Tail configuration	Ventral fin	α', deg	Ω, rps (sec/turn)	Turns for recovery
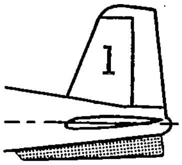	[a]Off	79	0.94 (1.06)	∞
		46	0.46 (2.2)	$2\frac{1}{2}$, 3, $3\frac{1}{2}$
	[a]On	75	0.79 (1.3)	∞
		48	0.45 (2.2)	$1\frac{3}{4}$, $2\frac{1}{2}$, $2\frac{1}{2}$
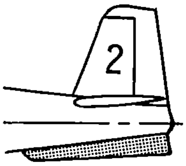	Off	47	0.46 (2.2)	2, $2\frac{1}{4}$, 3
	On	---	------	[b]$\frac{1}{2}$
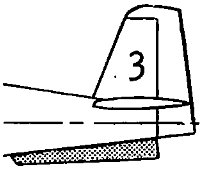	[a]Off	81	0.79 (1.3)	∞
		52	0.50 (2.0)	2, $2\frac{1}{4}$, 3
	On	55	0.54 (1.9)	$1\frac{1}{2}$, $2\frac{1}{4}$, $2\frac{1}{2}$
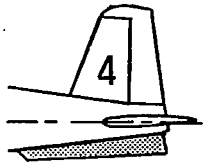	[a]Off	77	0.97 (1.0)	∞
		35	0.45 (2.2)	1, $1\frac{1}{4}$, $1\frac{1}{4}$
	On	---	------	[b]$\frac{3}{4}$

[a] Two conditions possible.

[b] Recovery attempted before final attitude reached.

[c] No recovery attempted because spin mode too steep to hold in tunnel.

TABLE III.- Concluded

Tail configuration	Ventral fin	α', deg	Ω, rps (sec/turn)	Turns for recovery
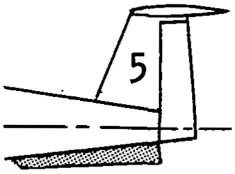	Off	41	0.44 (2.3)	$\frac{1}{2}$, $\frac{3}{4}$, 1
	On	47	0.42 (2.4)	$\frac{3}{4}$, 1
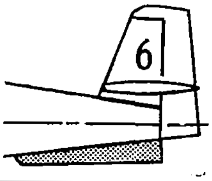	Off	55	0.52 (1.9)	2, 2, $2\frac{1}{4}$
	On	53	0.49 (2.0)	$1\frac{3}{4}$, $2\frac{1}{4}$, $2\frac{1}{2}$
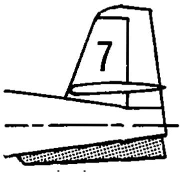	Off	53	0.46 (2.2)	$3\frac{1}{4}$, $3\frac{1}{2}$, 4
	[a]On	44	0.44 (2.3)	$1\frac{1}{2}$, $1\frac{1}{2}$, $2\frac{1}{2}$
		---	-----	(c)
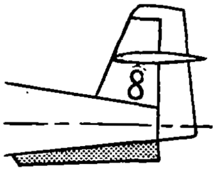	[a]Off	44	0.42 (2.4)	$\frac{1}{2}$, $\frac{3}{4}$
		37	0.37 (2.7)	$\frac{3}{4}$
	On	37	0.39 (2.6)	$\frac{1}{4}$, $\frac{1}{4}$
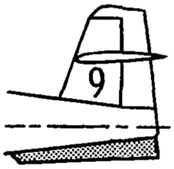	Off	29	0.45 (2.2)	1
	On	40	0.45 (2.2)	1, 1

[a] Two conditions possible.

[b] Recovery attempted before final attitude reached.

[c] No recovery attempted because spin mode too steep to hold in tunnel.

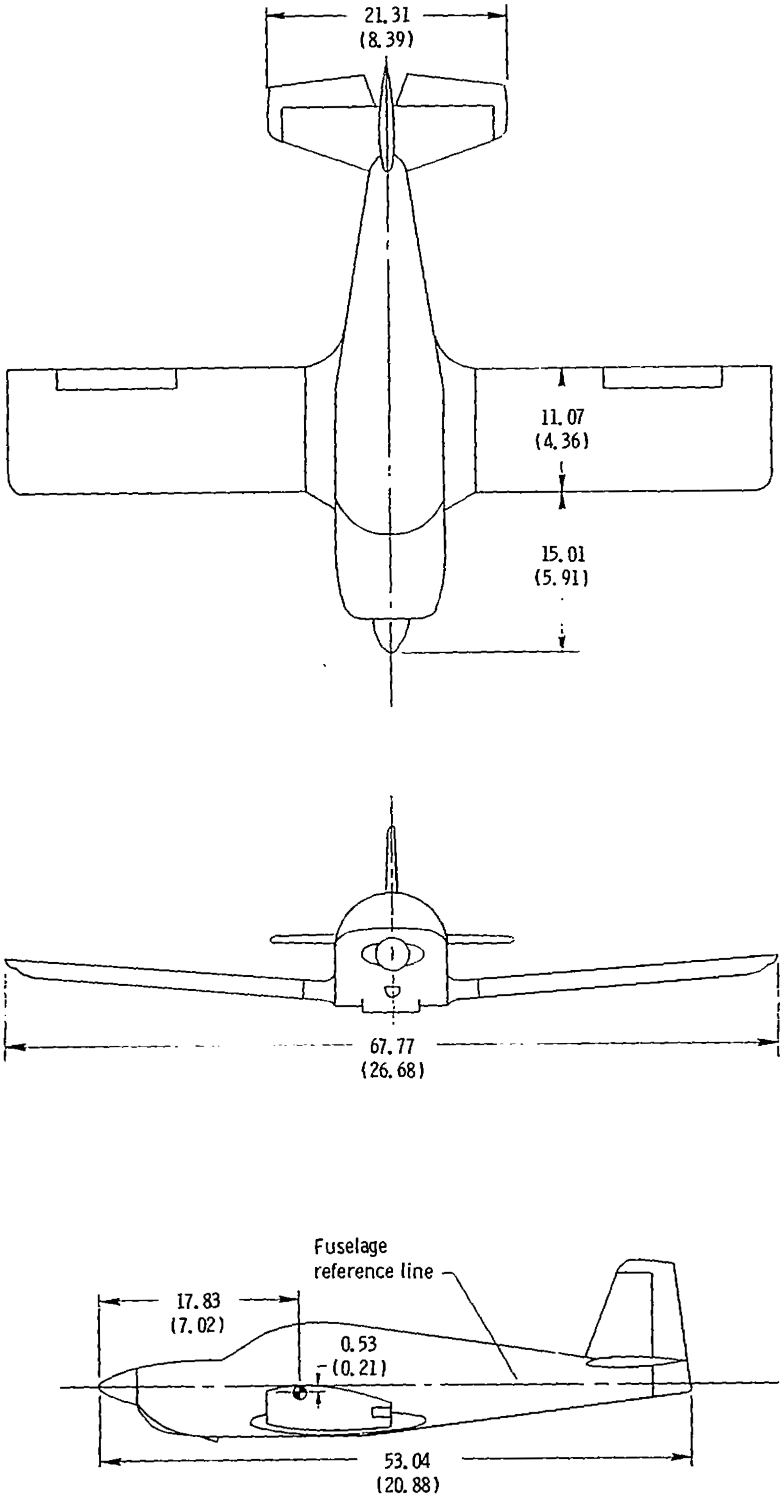

Figure 1.- Three-view drawing of 1/11-scale model tested with tail 3 illustrated. Center of gravity is at 0.255$\bar{c}$. Dimensions are model scale and are given in centimeters (inches).

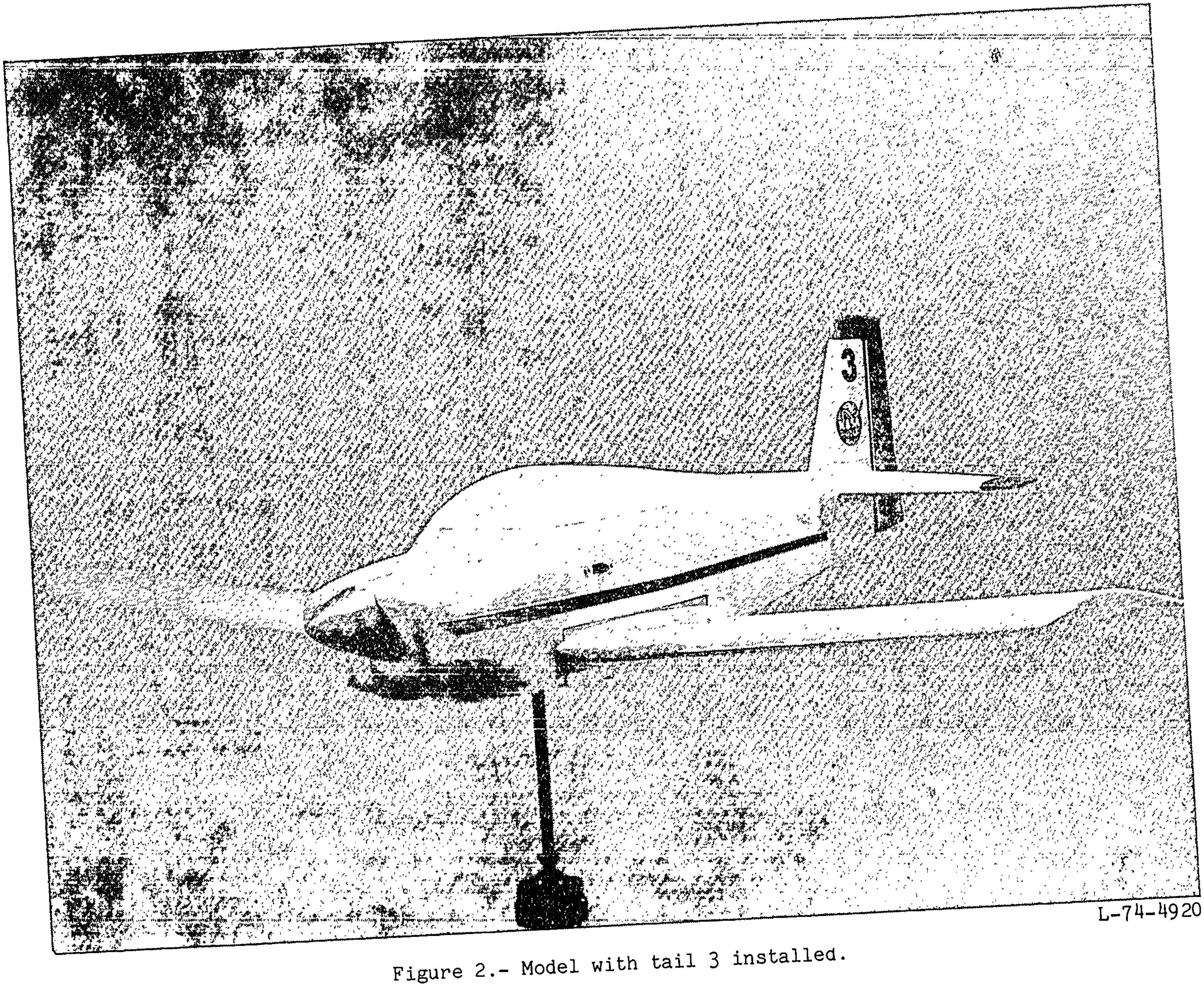

L-74-4920

Figure 2.- Model with tail 3 installed.

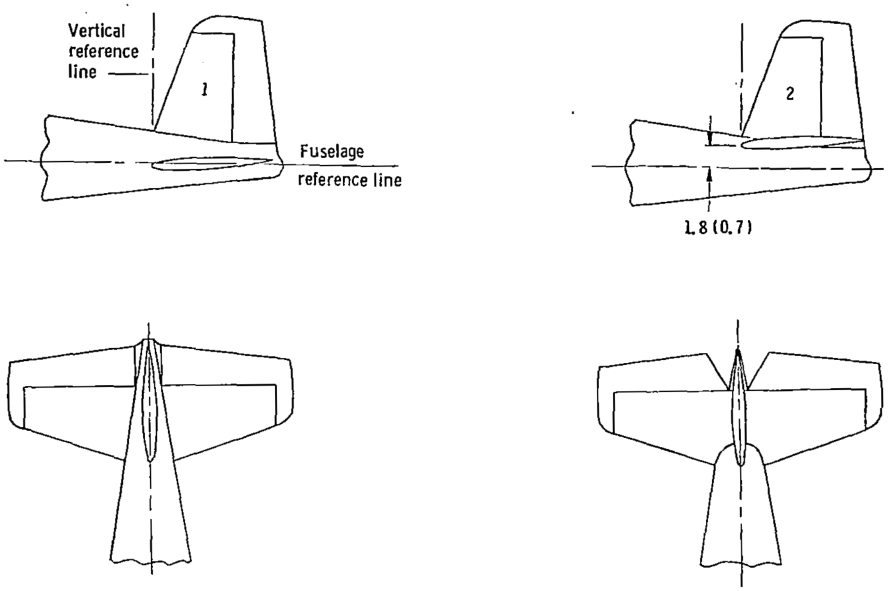

(a) Tail 1.

(b) Tail 2.

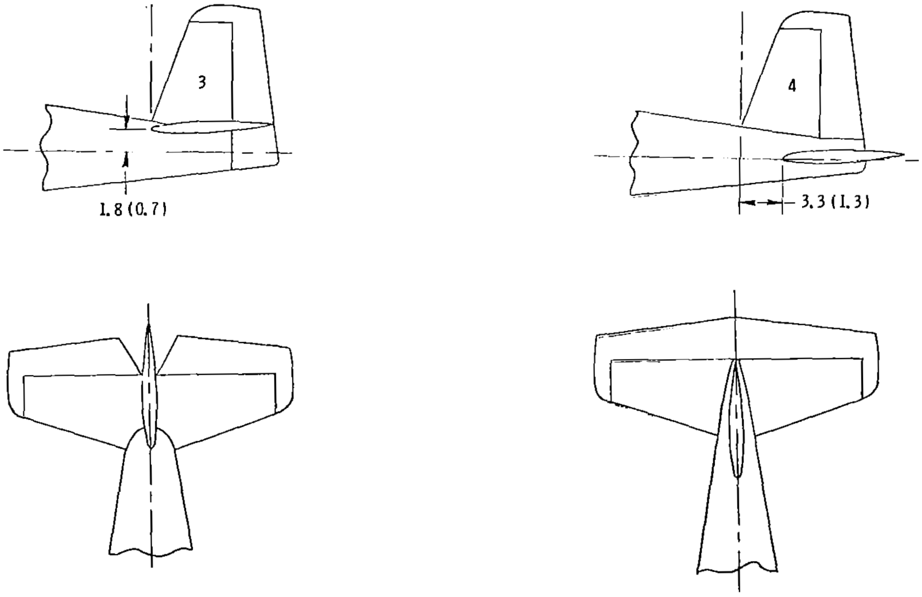

(c) Tail 3.

(d) Tail 4.

Figure 3.- Tail configurations tested on model. Dimensions are model scale and given in centimeters (inches).

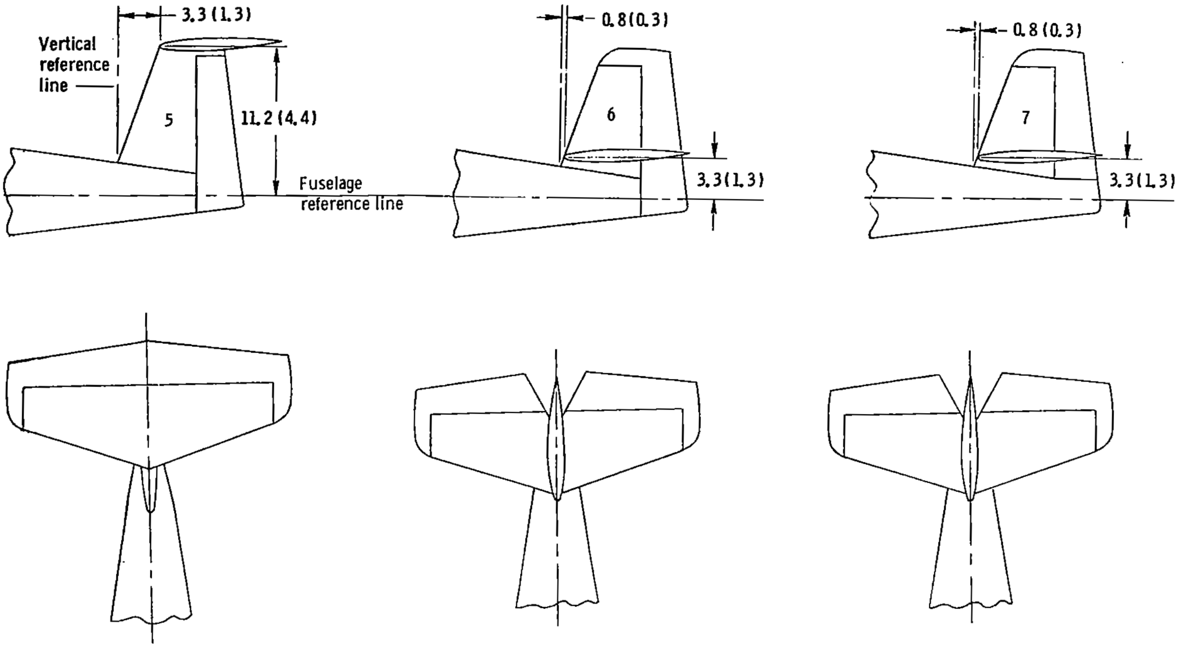

(e) Tail 5. (f) Tail 6. (g) Tail 7.

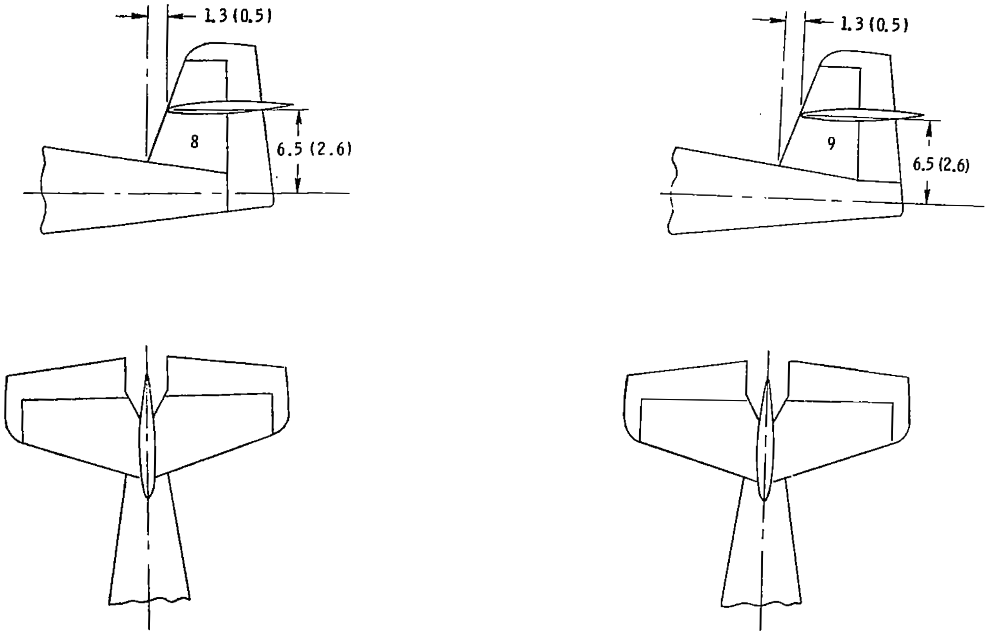

(h) Tail 8. (i) Tail 9.

Figure 3.- Concluded.

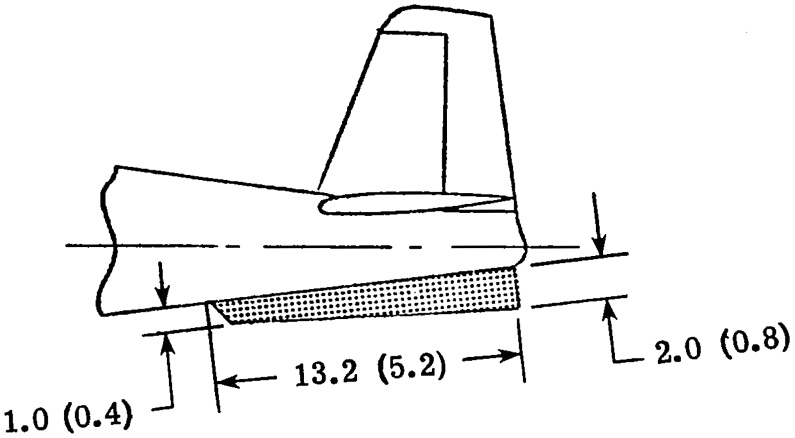

(a) Partial-span rudder.

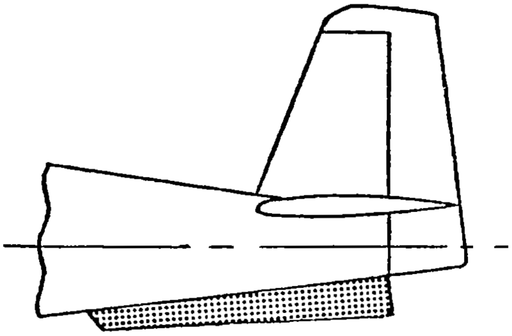

(b) Full-span rudder.

Figure 4.- Size and typical locations of vertical fin on tail configurations having partial- and full-span rudders. Dimensions are model scale and given in centimeters (inches).

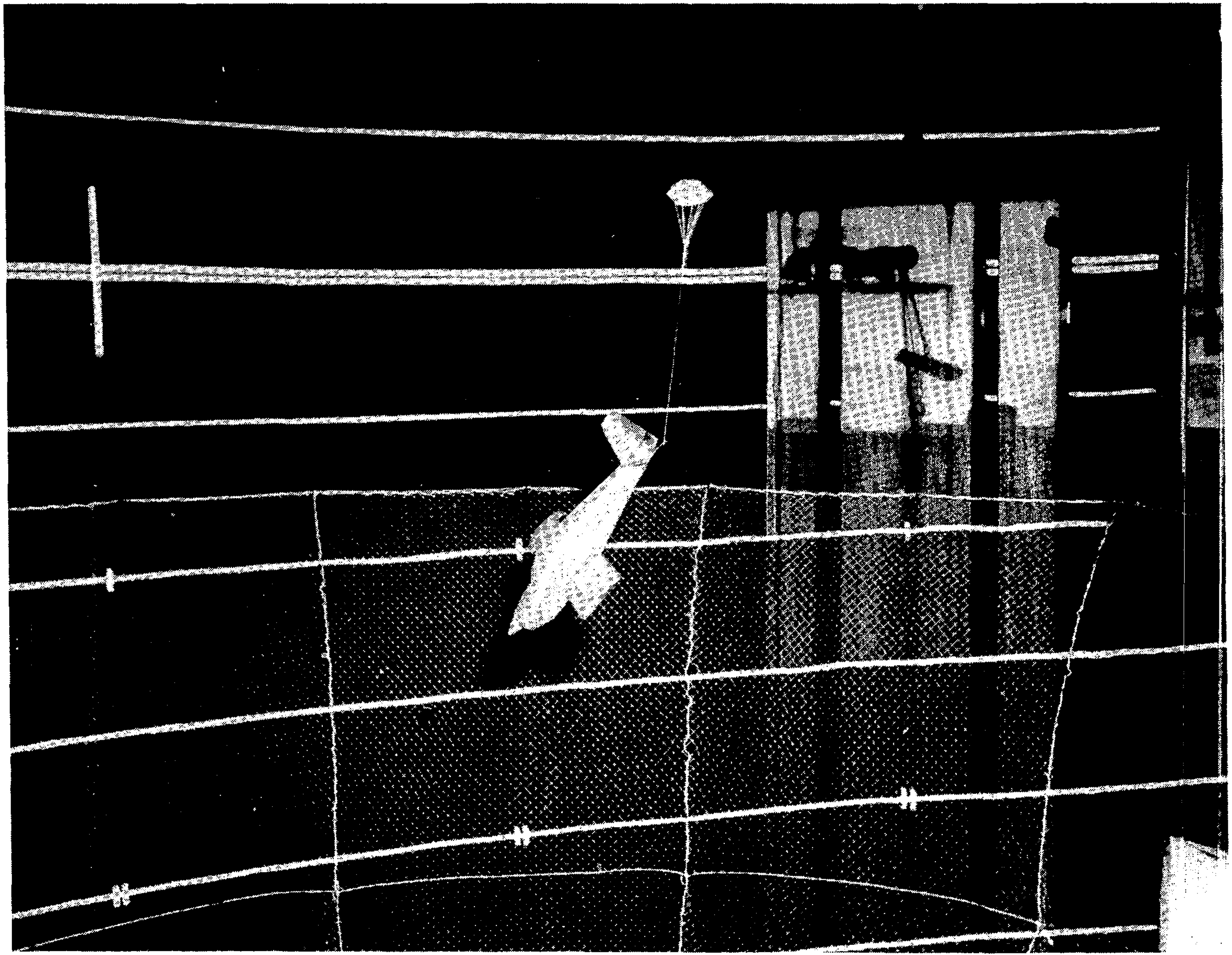

L-74-4552

Figure 5.- Model with spin-recovery parachute being tested in the Langley spin tunnel.

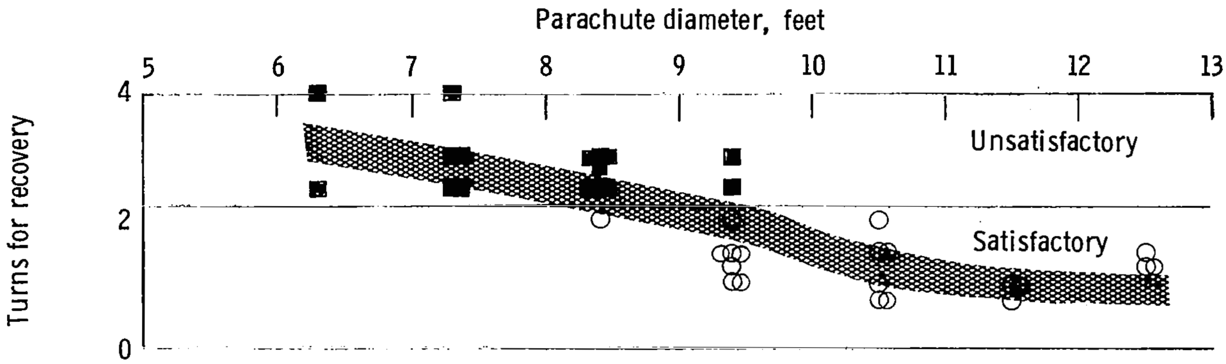

(a) Flat spin mode.

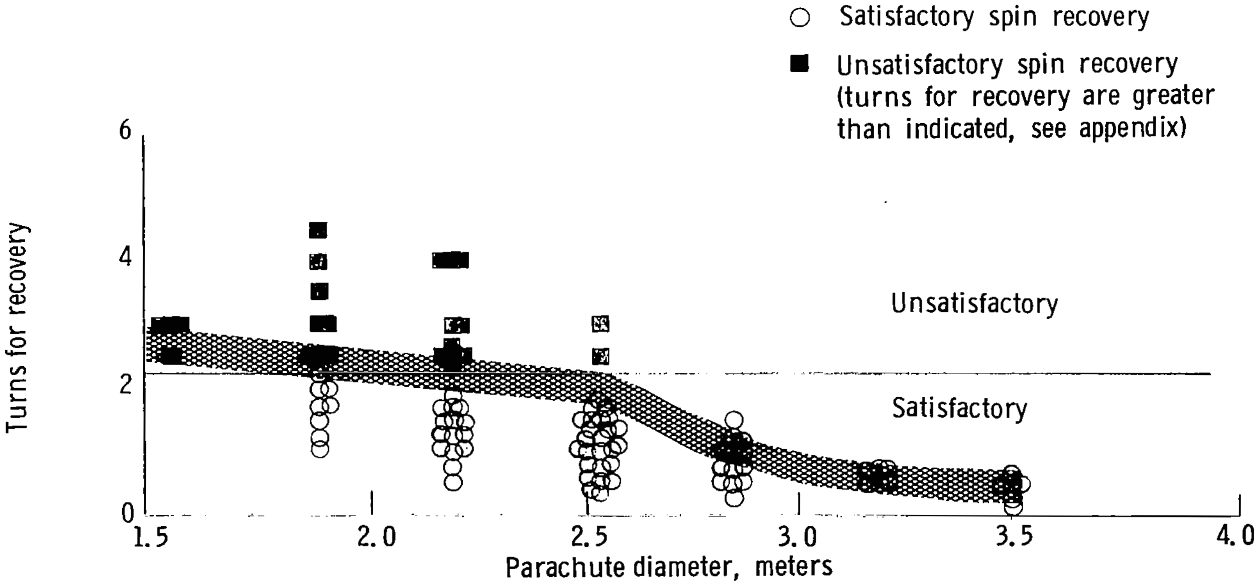

(b) Steep spin mode.

Figure 6.- Parachute diameter required for emergency spin recovery from flat and steep spin modes. Dimensions are full scale.

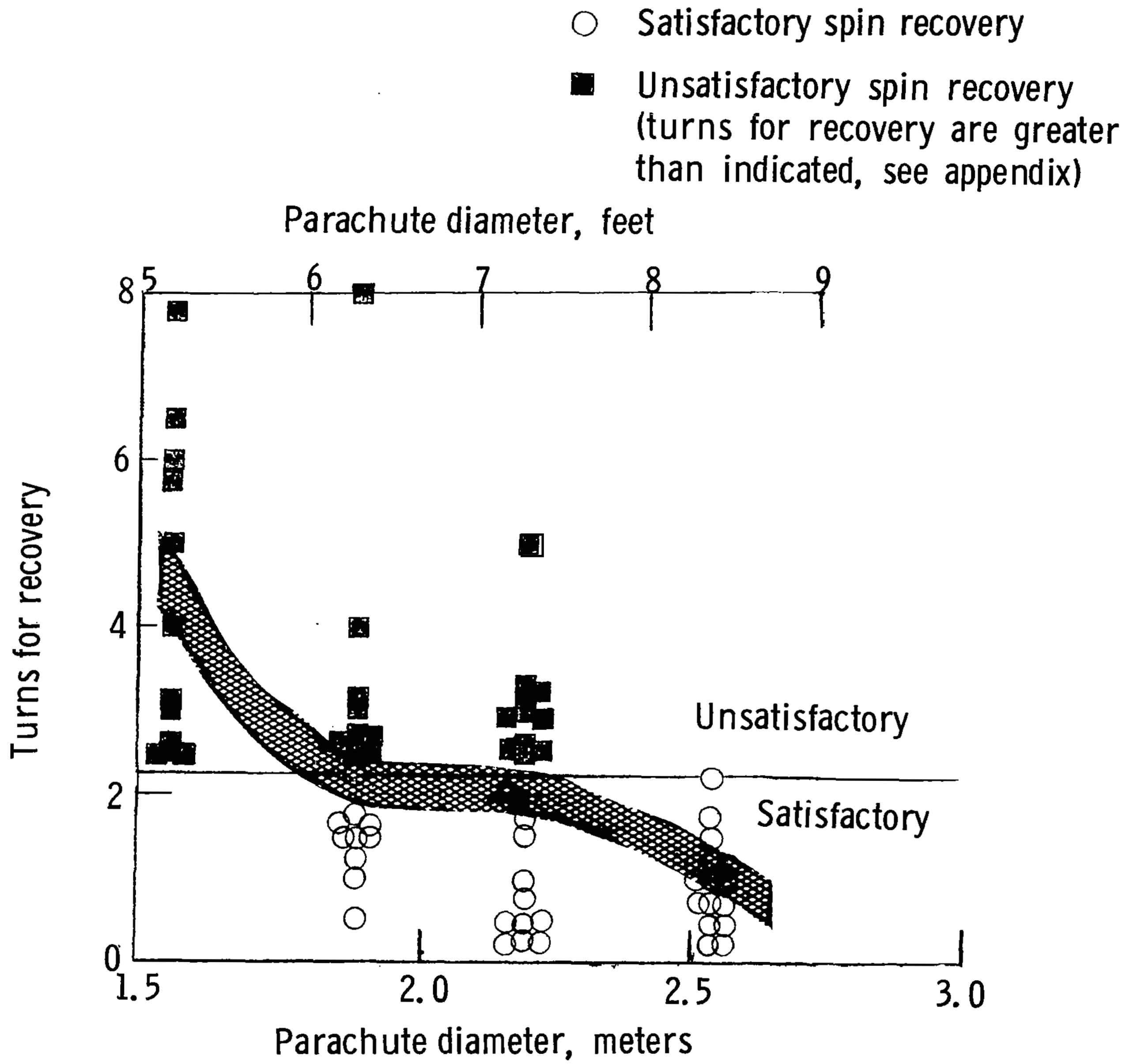

Figure 7.- Parachute diameter required for emergency spin recovery from steep spin mode with ventral fin on model. Dimensions are full scale.

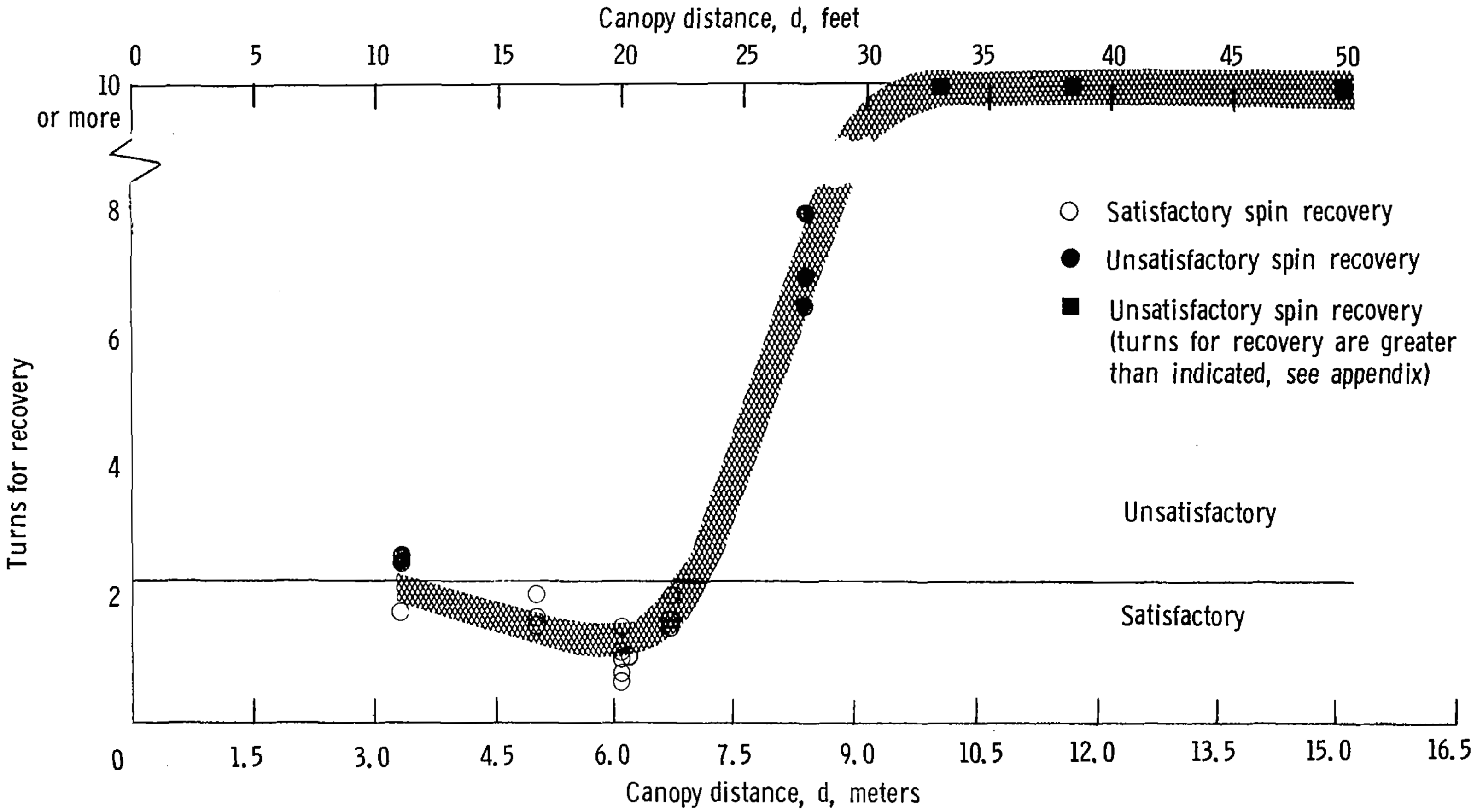

Figure 8.- Effect of canopy distance on turns for recovery from <u>flat spin</u> modes. Dimensions are full scale.

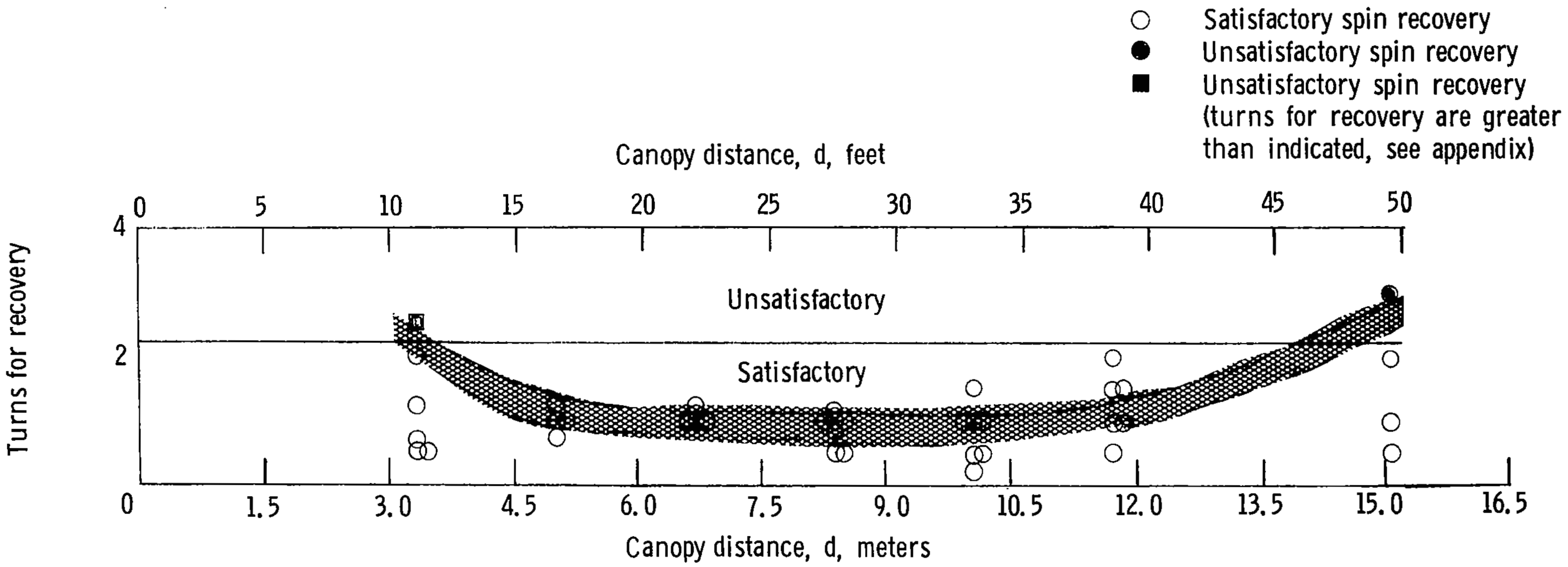

Figure 9.- Effect of canopy distance on turns for recovery from steep spin modes. Dimensions are full scale.

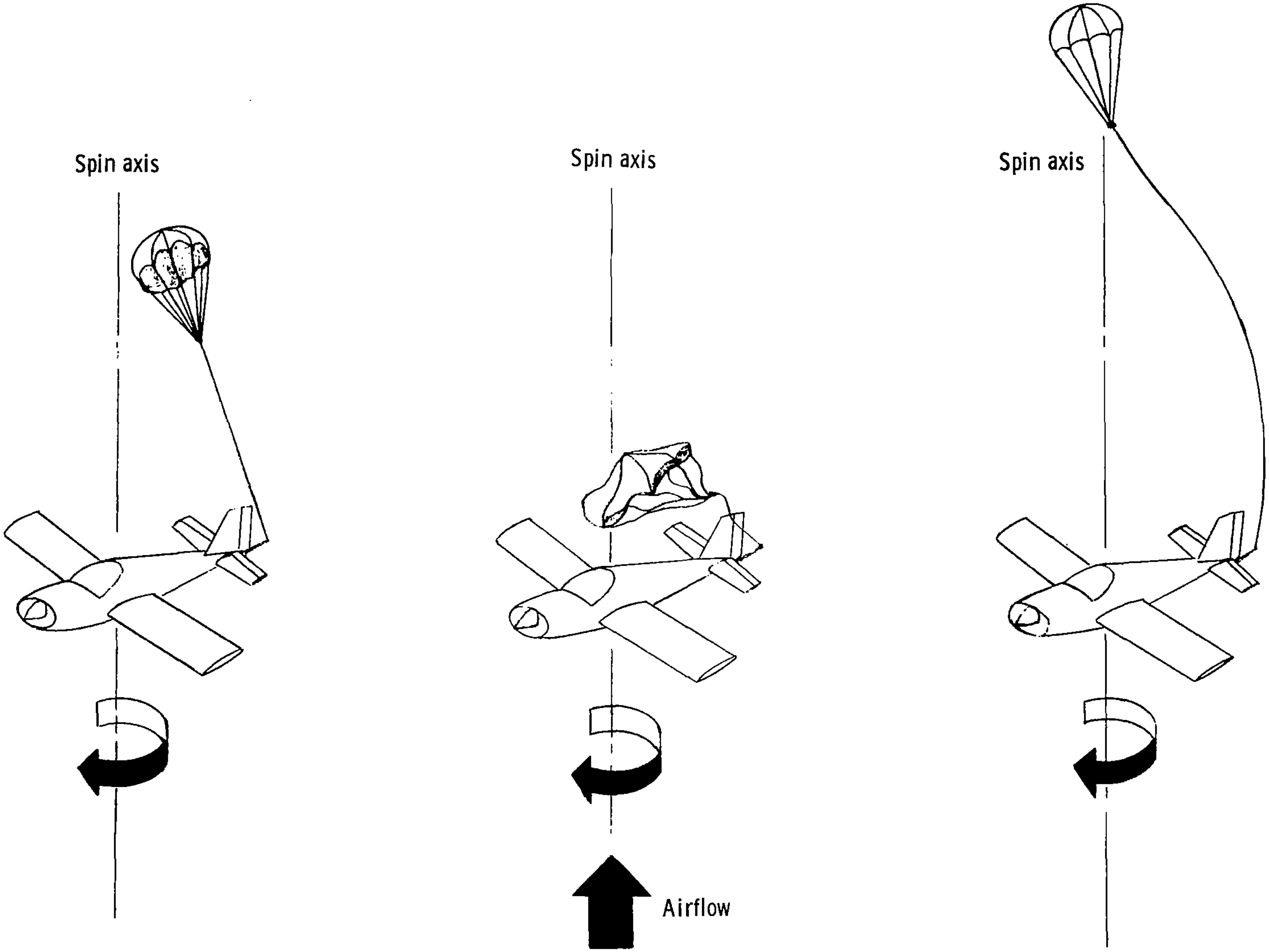

(a) Correct configuration.

(b) Canopy distance too short - parachute collapses.

(c) Canopy distance too long - parachute ineffective.

Figure 10.- Effect of parachute canopy distance for flat spin.

1. Report No.
NASA TP-1076

2. Government Accession No.

3. Recipient's Catalog No.

4. Title and Subtitle SPIN-TUNNEL INVESTIGATION OF THE SPINNING CHARACTERISTICS OF TYPICAL SINGLE-ENGINE GENERAL AVIATION AIRPLANE DESIGNS. II - LOW-WING MODEL A: TAIL PARACHUTE DIAMETER AND CANOPY DISTANCE FOR EMERGENCY SPIN RECOVERY

5. Report Date
November 1977

6. Performing Organization Code

7. Author(s)
Sanger M. Burk, Jr.; James S. Bowman, Jr.; and William L. White

8. Performing Organization Report No.
L-11804

9. Performing Organization Name and Address
NASA Langley Research Center
Hampton, VA 23665

10. Work Unit No.
505-06-95-01

11. Contract or Grant No.

12. Sponsoring Agency Name and Address
National Aeronautics and Space Administration
Washington, DC 20546

13. Type of Report and Period Covered
Technical Paper

14. Sponsoring Agency Code

15. Supplementary Notes

16. Abstract

An investigation has been conducted in the Langley spin tunnel on a 1/11-scale model of a research airplane typical of low-wing, single-engine, light general aviation airplanes to determine the tail parachute diameter and canopy distance (riser length plus suspension-line length) required for emergency spin recovery. Nine tail configurations were tested, resulting in a wide range of developed spin conditions, including steep spins and flat spins. The results of the investigation indicated that the full-scale parachute diameter required for satisfactory recovery from the most critical conditions investigated was about 3.2 m (10.5 ft) and that the canopy distance, which was found to be critical for flat spins, should be between 4.6 and 6.1 m (15 and 20 ft).

17. Key Words (Suggested by Author(s))
Spinning
Light airplanes
Spin-recovery parachute
Effect of tail configurations
Mass and gyroscopic effects

18. Distribution Statement
Unclassified - Unlimited

Subject Category 02

19. Security Classif. (of this report)	20. Security Classif. (of this page)	21. No. of Pages	22. Price*
Unclassified	Unclassified	27	$4.00

*For sale by the National Technical Information Service, Springfield, Virginia 22161

NASA-Langley, 1977

National Aeronautics and
Space Administration

Washington, D.C.
20546

Official Business
Penalty for Private Use, $300

SPECIAL FOURTH CLASS MAIL
BOOK

Postage and Fees Paid
National Aeronautics and
Space Administration
NASA-451

U.S.MAIL

3 1 1U,A, 110777 S00903DS
DEPT OF THE AIR FORCE
AF WEAPONS LABORATORY
ATTN: TECHNICAL LIBRARY (SUL)
KIRTLAND AFB NM 87117

NASA

POSTMASTER: If Undeliverable (Section 158
Postal Manual) Do Not Return