https://ntrs.nasa.gov/search.jsp?R=19790003967 2020-03-22T00:48:18+00:00Z

General Disclaimer

One or more of the Following Statements may affect this Document

- This document has been reproduced from the best copy furnished by the organizational source. It is being released in the interest of making available as much information as possible.

- This document may contain data, which exceeds the sheet parameters. It was furnished in this condition by the organizational source and is the best copy available.

- This document may contain tone-on-tone or color graphs, charts and/or pictures, which have been reproduced in black and white.

- This document is paginated as submitted by the original source.

- Portions of this document are not fully legible due to the historical nature of some of the material. However, it is the best reproduction available from the original submission.

Produced by the NASA Center for Aerospace Information (CASI)

CR 151854

(NASA-CR-151854) SHUTTLE GPS R/PA EVALUATION ANALYSIS AND PERFORMANCE TRADEOFF STUDY Final Report (LinCom Corp., Pasadena, Calif.) 65 p HC A04/MF A01 CSCL 22A

N79-12138

Unclas
G3/16 38896

DEC 1978
RECEIVED
NASA STI FACILITY

LinCom Corporation
P.O. Box 2793D, Pasadena, Calif. 91105

LinCom

FINAL REPORT

SHUTTLE GPS R/PA EVALUATION

ANALYSIS AND PERFORMANCE TRADEOFF STUDY

Prepared for

NASA JOHNSON SPACE CENTER
Houston, TX 77058

and

ROCKWELL INTERNATIONAL
Downey, CA

Under Contract NAS 9-15492

Prepared by

Dr. R. W. D. Booth
Dr. W. C. Lindsey

LINCOM CORPORATION
P.O. Box 27930
Pasadena, CA 91105

SEPTEMBER 8, 1978

TR-0978-0278

LinCom

TABLE OF CONTENTS

		Page
1.0	Introduction	1
2.0	Summary of Problem	1
3.0	General GPS Receiver Description	3
4.0	Shuttle Environment	8
5.0	Shuttle Requirements	10
6.0	GPS Receiver Capabilities	13
7.0	Anti-Jamming Properties of C/A Code	53
8.0	Summary and Conclusions	58
	References	62

1.0 Introduction

LinCom has been directly involved with the present Shuttle/GPS study since the First Shuttle/GPS Panel Meeting convened in June, 1977. LinCom's primary responsibility has been understanding and analyzing the various GPS receiver functions as they relate to the Shuttle environment. These receiver functions include acquisition properties of the sequential detector, acquisition and tracking properties of the various receiver phase locked loops, and the techniques of sequential receiver operation. In addition to these areas, LinCom has provided support in the areas of oscillator stability requirements, antenna management, and navigation filter requirements including preposition aiding. This final report summarizes LinCom's efforts in these various areas over the last year.

2.0 Summary of Problem

There does not exist at this time a GPS receiver tailored to the Shuttle environment. Therefore, it is necessary to first examine the available GPS receivers and determine the suitability of the present hardware. Since the deployment of operational GPS satellites and the availability of GPS receivers is at a natal stage in the GPS program development, the existence of present programs does not guarantee the existence of functioning hardware in the future. Given that the presently available GPS hardware does not satisfy Shuttle requirements, then it is necessary to specify a receiver that is satisfactory.

The receiver must provide the measurements required by the position determining algorithm or navigation filter. To do this, the receiver accepts RF signals from various GPS satellites (when available), processes them in an appropriate fashion and generates two measurements per observed satellite: pseudo range and range rate. The pseudo range differs from the actual range by an additive constant due to local GPS receiver clock phase errors. This constant is the same for all satellites. These pseudo range measurements are converted to range measurements by the navigation filter. The range rate measurements are performed by measuring Doppler offsets. The particular environment in which the receiver operates (obtains pseudo range and range rate measurements) dictates the type of receiver chosen. The receiver environment is defined by the condition of the GPS signals available to the receiver. Contributors to the signal condition are the power in the received signal relative to the receiver noise, the dynamics of the signal, and other distortions introduced by the receiver itself. Given that the receiver design is more or less distortion-free, the remaining contributors to the signal condition are due to geometry considerations, i.e., position and velocity of the vehicle (Shuttle) vis-a-vis the GPS satellites. In general, the problem of combatting receiver noise is solved by narrowing the receiver bandwidths and the problem of combatting relative vehicle dynamics is solved by widening receiver bandwidths. This conflict may or may not be resolvable.

This final report is intended to be a concise review of

the capabilities of present GPS receivers vs the Shuttle requirements. As such, it consists of a mixture of data obtained about available GPS receivers, summary of Shuttle peculiar requirements/ environment and various analysis/simulations pertaining to the utility of GPS receivers either available now or envisioned.

3.0 General GPS Receiver Description

All GPS receivers must perform essentially the same functions: estimate pseudo range and range rate to the various available GPS satellites. To do this the receiver must first decide which GPS satellites are available (the visibility problem), then it must carefully lock to the signal (the acquisition problem) and finally remove the data and perform the ranging measurements (the tracking problem). Assuming a satellite is visible (i.e., the signal SNR exceeds some minimum value) then the receiver may acquire the signal. The method of acquiring the signal depends on the signal structure.

In general, each GPS satellite transmits three signals. All of these signals are direct sequence spread spectrum type signals. Two of these signals comprise an unbalanced quadriphase signal at L_1 (~1500 MHz) and the third signal at L_2 (~1200 MHz). The unbalanced quadriphase signal at L_1 consists of two quadrature carriers. The higher powered carrier contains a Gold code (C/A code) peculiar to that satellite and the quadrature carrier contains a PN sequence (P-code) with a period that it truncated at 7 days. The L_2 channel is a PSK signal containing just the P-code. The C/A code is used as an acquisition aid since its period is only 1 ms. The C/A code also may be used for ranging with reduced accuracy.

The p-code is used to provide a higher degree of ranging accuracy and jamming immunity to more sophisticated users. The L_2 signal is available to those users interested in removing the ionsopheric path length delay. This L_2 signal is modulated only by the p-code and thus is not available to the casual C/A only user. The properties of the GPS signals are illustrated in Figures 1,2, and 3.

The receivers estimate pseudorange and range rate from these signals in the following straightforward fashion: pseudorange is estimated by measuring the phase of the received code waveforms relative to a locally stored replica and range rate is estimated by measuring the Doppler shift or frequency offset of the received carrier. The receiver goes about making these measurements in an orderly fashion. First the code phase is estimated. (Either C/A or P depending on the uncertainty.) Since the code phase is proportional to range there is a certain amount of uncertainty in the code phase proportional to the uncertainty in range. This uncertainty is removed by carefully searching over the uncertainty region in the code. This is done by a sequential detector. Once the sequential detector has found the correct code phase within a nominal amount of offset (usually less than .5 chip of code) then a code tracking loop is activated which reduces the code phase error to about .05 chip (1.5 m p-code). At this point a pseudorange measurement may be obtained. Once the code phase is available, the received signal may be despread so that a data modulated carrier remains. The center frequency of the carrier is

GPS NAVIGATION SIGNALS

L_1 (PRIMARY)	1575.42 MHz			
L_2 (SECONDARY)	1227.6 MHz			
P CODE			L_1	L_2
10.23 MBPS	7 DAY	LENGTH	X	X
C/A CODE				
1.023 MBPS	1 MSEC	LENGTH	X	
DATA				
1500 BIT	FRAME	50 BPS	X	X

Figure 1. GPS Signal Structure.

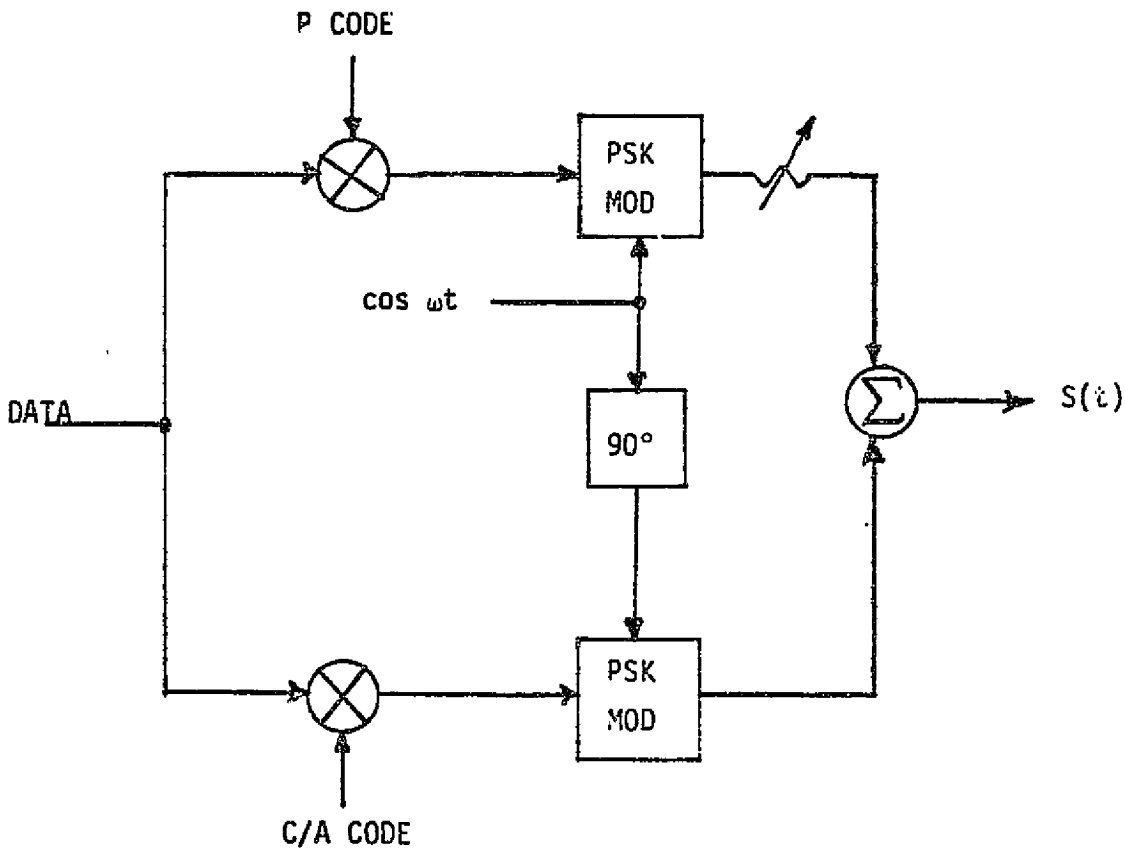

Figure 2. Simplified GPS Modulat r.

(UNBALANCED QUADRAPHASE 2:1)

Figure 3. SIMPLIFIED BLOCK DIAGRAM OF COMBINED P AND C/A SIGNAL GENERATOR

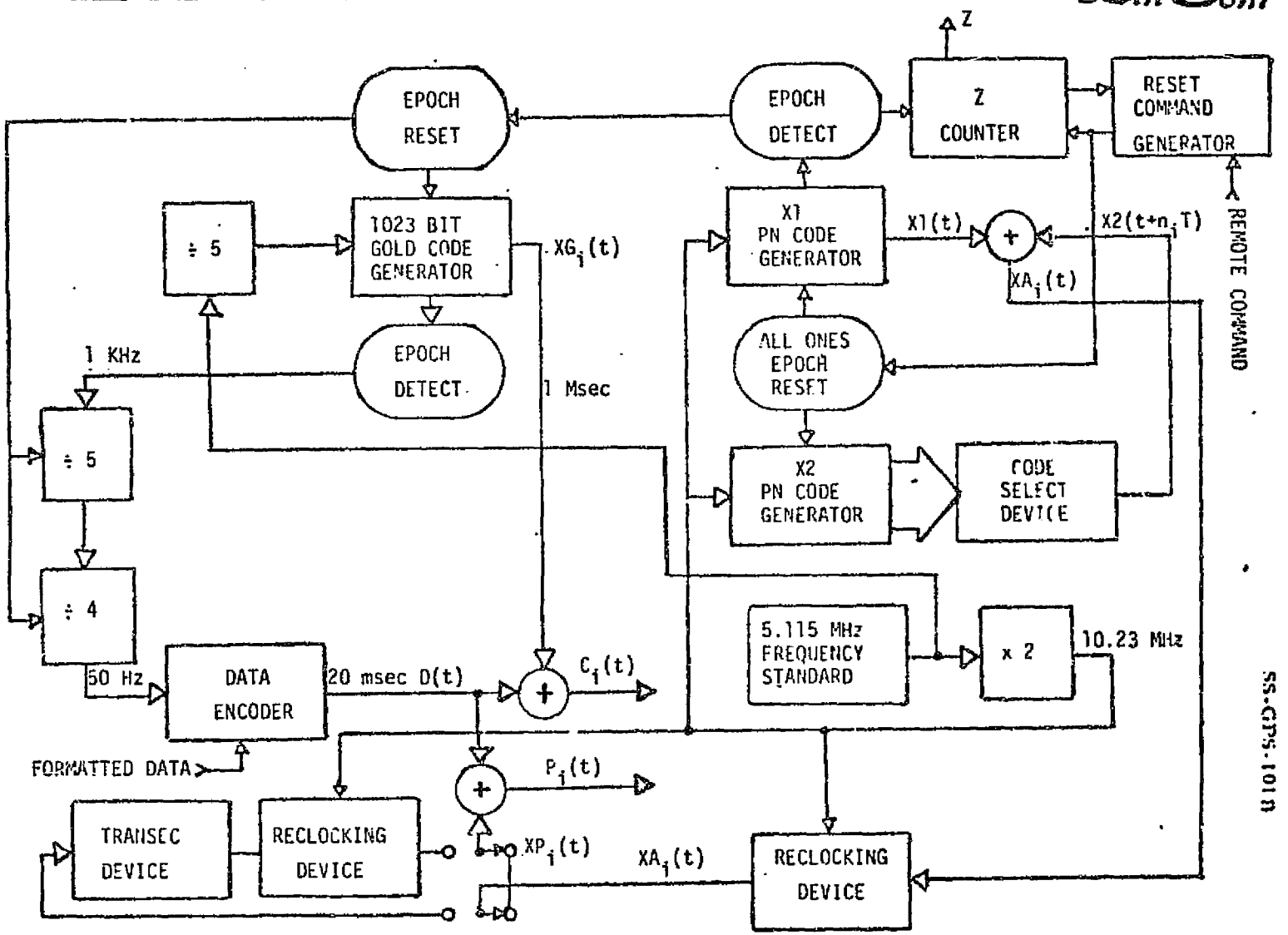

offset from the transmitted frequency by the Doppler offset. This Doppler offset can be measured and used to estimate the relative vehicle velocity. The frequency offset is measured by locking a local reference (Costas-AFC) to this modulated carrier and then measuring this frequency relative to the local reference (assumed reasonably stable). Finally, phase lock can be achieved if data demodulation is required.

A simplified block diagram of a typical GPS receiver is illustrated in Figure 4. Some receivers may differ from the rather loose description above, for example, some receiver designers attempt to take advantage of the more detailed structure of the codes by performing matched filter type detection. The above receiver acquisition and tracking problems will be discussed in detail in the following sections as they relate to the LinCom tasks.

4.0 Shuttle Environment

This section contains a concise description of the Shuttle environment and the effect of this environment on the GPS signals received. This description is only partially valid even at this date since more information is being presently collected with regards to the Shuttle dynamics, EMI, etc.

Possibly the most significant feature of the Shuttle vehicle is its dynamics. Since the fundamental use of the GPS system is to perform ranging measurements than any changes in the range during the measurement interval must be considered. The Shuttle

LinCom

Figure 4. SHUTTLE/GPS R/PA SYSTEM WITH MAJOR FUNCTIONAL BUILDING BLOCKS

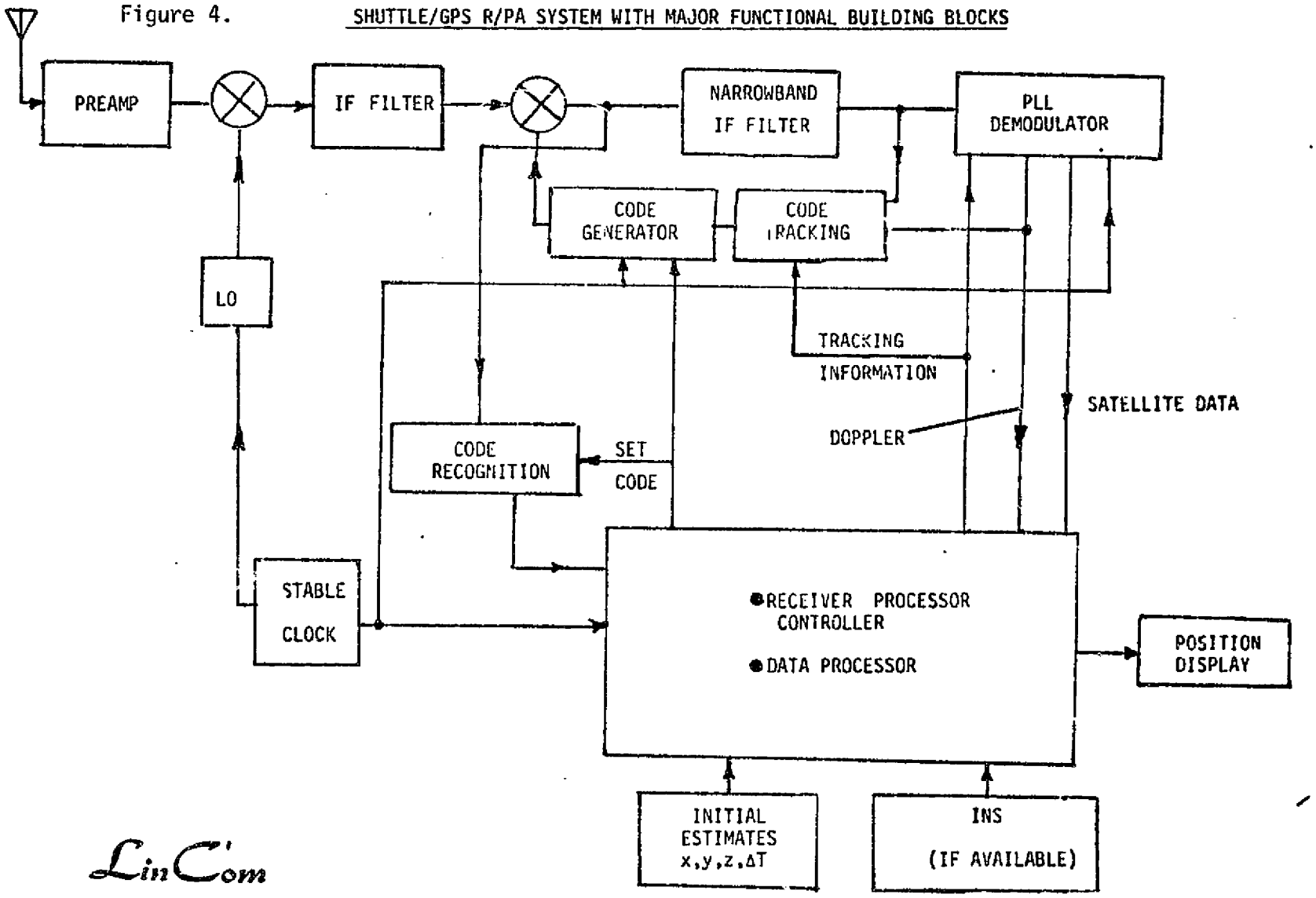

LinCom

may be characterized by extremely high velocity, moderate acceleration and low jerk. The high velocity is peculiar to the space vehicle type of user. Satellites, missiles and the Shuttle all have maximum velocities in the 9-10 Km/sec region. The maximum acceleration of about 1.7 g's (both on orbit and reentry) is moderate since it falls between the upper bound set by highly manueverable aircraft and the lower bound set by stationary users. The range jerk is small in almost all instances, the notable exceptions being motor burns (high jerk for short durations) and manuevers during descent (moderate sustained jerk). The Shuttle dynamics are summarized in Figure 5. This data in this particular figure was supplied by R. Strelow/Rockwell and J. Kirkpatrick/JSC. It should be noted that except for the RCS transient these dynamics are specified for the Shuttle center of gravity and do not include the motion of the antenna phase center relative to this center of gravity.

5.0 Shuttle Requirements

This section will hopefully serve as a summary of the Shuttle requirements with regard to receiver properties as they are understood at this time. Basically, the receiver must function in two modes, acquisition and tracking. The receiver must be sufficiently sophisticated that the GPS signals be acquired quickly under various first fix scenarios and once acquired the receiver must be able to track under the various dynamics

LinCom

Figure 5. SHUTTLE DYNAMICS SUMMARY

	VELOCITY	ACCELERATION	JERK	NOTES
ON ORBIT	9067.8 m/sec (29,760 ft/sec)	16.06 m/sec^2 (52.7 ft/sec^2)	.022 m/sec^3 (.072 ft/sec^3)	ON ORBIT AND DESCENT •D. STRELOW/ROCKWELL •WORST CASE 60x600 NMI
ASCENT/ DESCENT		14.94 m/sec^2 (49.0 ft/sec^2)	4.11 m/sec^3 (13.5 ft/sec^3)	
RCS START TRANSIENT	5.2x10^{-3} m/sec (1.71x10^{-2} ft/sec)	.83 m/sec^2 2.7 ft/sec^2	PEAK: 104.5m/sec^3 (343 ft/sec^3) HALF OF SINE PULSE T = 12.5 ms	EXTREMELY HIGH JERK FOR SHORT DURATION. D.STRELOW/ROCKWELL
OMS BURN	.04 m/sec (.138 ft/sec) TRANSIENT = .037s	PEAK: 2.06 m/sec^2 (6.76 ft/sec^2) STEADY STATE: .84m/sec^2 (2.75ft/sec^2)	ON: PEAK:140m/sec^3 (460 ft/sec^3) TRANSIENT:.017s OFF: PEAK: 4.57m/sec^3 (15 ft/sec^3) TRANSIENT: .2 sec	MOTOR TURN ON. HIGH JERK FOR SHORT PERIOD (.017 sec) SETTLING TO CONSTANT ACCELERATION (2.06m/sec D. STRELOW/ROCKWELL

situations. The definitions of "acquisition" and "tracking" generally include caveats, i.e. there is a certain probability of acquisition and a certain limit to the dynamics under which the receiver will successfully track.

The tracking requirements specified out in Figure 5. Loosely, it is necessary that the GPS receiver track through the various dynamics. While it may be necessary to track under steady state conditions, there may exist some situations where even a high dynamics receiver could not maintain a tracking mode.

The acquisition requirements fall into several categories depending on the importance of providing relatively fast fixes. At this time there appears to be three distinct acquisition problems which are all specified by the separate time to first fix (TTFF) requirements. The first TTFF is specified by the orbit insertion problem. Briefly, it is desired to obtain a position fix as soon as possible after the main engine cutoff (MECO) and prior to OMS-1 burn. The second requirement is dictated by post blackout considerations. Again it is desired to obtain a position fix as soon as possible after the Shuttle emerges from the bottom side of the ionosphere so that landing maneuvers may be initiated. The third major acquisition problem is an on orbit reacquisition problem based on some postulated power outages. Finally, there are other acquisition problems such as the periodic replacement of set satellites with new satellites and the problem of periodically reacquiring satellites in a sequential receiver. The replacement problem is a general problem for all users and all receivers and the periodic reacquisition problem is peculiar to sequential

receivers. The TTFF requirements and attendant uncertainties are outlined in Figure 6. The clock uncertainties are the courtesy of G. Matchett/TASC. The position/velocity uncertainties are the courtesy of E. Schiesser/JSC.

6.0 GPS Receiver Capabilities

A. Doppler Offset

The utlimate bandwidths of all GPS receivers is quite small ranging from about 500 Hz in the sequential detector to less than 1 Hz in some code tracking loops. Since a relative vehicle velocity of 9 Km/sec induces a Doppler offset of approximately 45 KHz at 1.5 GHz then it is absolutely essential that the receiver hardware be capable of removing this Doppler offset. It will not be possible to either acquire or track the GPS signals if the Doppler is not removed. This implies that the dynamic range of the VCO be large enough so that the VCO may be offset by this maximum amount of ± 45 KHz. The ability of any particular GPS receiver to handle a particular Doppler offset is reflected in the maximum velocity specification of the receiver. If the particular receiver does not cover the desired maximum velocity (~9 Km/sec for the Shuttle) then the manufacturer will have to modify the set in some fashion in order to meet the specification.

The VCO's used in the GPS receivers fall into two categories; analog and digital. The analog VCO's are contained in receivers where the bulk of the receiver functions are performed with analog

LinCom

Figure 6. ACQUISITION SCENARIO'S SUMMARY (E. SCHIESSER)

FLIGHT EVENT	UNCERTAINTIES	TTFF	COMMENTS
1. POST BLACKOUT C/A ACQ.	$3\sigma_X$ = 74,100 M $3\sigma_V$ = 61 M/SEC	150 SECONDS	• NO EPHEMERIDES AVAILABLE • ALMANAC UNCERTAINTY $1\sigma_X$ = 4000 M = 13.3 CHIPS C/A • WORST CASE INERTIAL UNCERTAINTIES
2. POST MECO C/A ACQ.	$3\sigma_X$ = 12,623 M $3\sigma_V$ = 44 M/SEC	240 SECONDS	• EPHEMERIDES AVAILABLE • WORST CASE INERTIAL UNCERTAINTIES
3. POST MECO P ACQ.	$3\sigma_X$ = 3,597 M $3\sigma_V$ = 7.6 M/SEC	240 SECONDS	• EPHEMERIDES AVAILABLE • NOMINAL INERTIAL UNCERTAINTIES

hardware such as the GPSPAC, Z-set and Manpack. In order to modify a present analog receiver design it is necessary to use a VCO that has the required dynamic range and change the gain of the loop filter in order to take advantage of the higher VCO dynamic range. Digital VCO's are implemented with digital phase shifters. Frequency offsets are synthesized by changing the phase at a fixed rate. Modifications to digital VCO's are either easy or impossible: either the digital phase shifter can be clocked at a higher rate or it cannot. In general, increasing the clock rate of digital hardware increases the power consumption. Figure 7 contains some information regarding the maximum velocity (hence Doppler offset) capabilities of present receivers.

B. Acquisition: Time-to-First-Fix (TTFF)

The acquisition properties of GPS receivers depends both on the design of the receiver and the situation or circumstances in which the receiver must acquire the available GPS signals. The actual time to first fix is a function of the prior knowledge or acquisition scenario of the GPS receiver. Without a doubt the more information that is available the easier it is to acquire the GPS signals and compute a fix.

The GPS signals contain all the information necessary in order to perform a fix computation. Not only is the pseudorange and range rate available by direct examination of the GPS signals but a good deal of information is contained in the data on the signals pertaining to the particular satellites ephemeris and clock health. All of this data may be collected with very little

Figure 7. SUMMARY OF DOPPLER OFFSET CAPABILITIES OF GPS RECEIVERS

DOPPLER OFFSET PERFORMANCE REFLECTED IN MAXIMUM VELOCITY SPEC OF RECEIVER

	MAX RCVR VELOCITY	SHUTTLE VELOCITY	SATISFIES SHUTTLE REQ.	COMMENTS
X-SET	900 M/SEC	9067.8 m/sec	NO	X-SET, Y-SET ARE DIGITAL RECEIVERS USING RM's (RATE MULTIPLIERS) PLUS IPM's (INCREMENTAL PHASE MODULATORS). MAY REQUIRE EXTENSIVE MODIFICATION TO MEET REQ.
Y-SET	600 M/SEC		NO	
Z-SET	400 m/sec		NO	ANALOG SETS. THE FILTER GAINS HAVE BEEN TAILORED FOR THE SPECIFIC REQUIREMENTS. MODIFICATIONS WOULD CONSIST OF CHANGING THE LOOPS INTO GPSPAC LOOPS
MANPACK	30 m/sec		NO	
GPSPAC	9000 m/sec		ALMOST	DESIGNED FOR HIGH VELOCITY APPLICATIONS. PROBABLY WILL WORK AT 9067.8 m/sec
MBRS	11,000m/sec		YES	FIVE CHANNEL DIGITAL RECEIVER DESIGNED FOR MISSILE APPLICATIONS

a priori knowledge (other than to know which side of the planet the user is on) and a fix obtained. With little or no a priori knowledge the general acquisition procedure is as follows. First the C/A code is acquired using first a sequential detector and then a code loop. This is done because this particular code has a fairly long chip period (10^{-6} s) and extremely short sequence period (10^{-3} s). The acquisition of this code results in an initial estimate of the Doppler offset and code phase. Once the C/A code has been acquired the signal phase is acquired by first acquiring the frequency with an AFC and finally the phase in a Costas loop. Once the phase has been acquired the data can be demodulated. Part of the data is a block of bits which contains the handover word (HOW). This is used to set the receiver time within 1.5 seconds of GPS system time and to initialize the P-coder. At this point is is possible to track the P-code and provide improved pseudorange measurements and jamming immunity. A minimum of four satellites is acquired and then a position fix may be computed. This elaborate procedure is illustrated in Figures 8 and 9.

The acquisition procedure outlined above requires the maximum amount of time to perform regardless of the GPS receiver chosen. The time to compute a fix may be reduced significantly if certain of the above steps are removed or eliminated. The biggest contributor to the TTFF budget is the time to remove the data. If the ephemeris and clock data for a particular satellite was known a prior then it would not be necessary to spend the time

Figure 8. CONTRIBUTORS TO TTFF

A. RECEIVER DESIGN

1. SINGLE CHANNEL

2. MULTI CHANNEL

B. ACQUISITION OF VARIOUS DETECTORS

1. CODE ACQUISITION

a. SEQUENTIAL DETECTOR

b. CODE LOOP PULL IN

2. INITIAL FREQUENCY OFFSET ESTIMATE

a. TWO FILTER DISCRIMINATOR

b. USED TO PREPOSITION AFC

3. AFC ACQUISITION

4. COSTAS LOOP ACQUISITION

5. BIT SYNC ACQUISITION

C. DATA DEMODULATION

1. FRAME SYNC

2. HANDOVER WORD

3. EPHEMERIS INFORMATION

D. P TRACK

Figure 9. ACQUISITION SEQUENCE SUMMARY
(ONE CHANNEL, ONE SATELLITE)

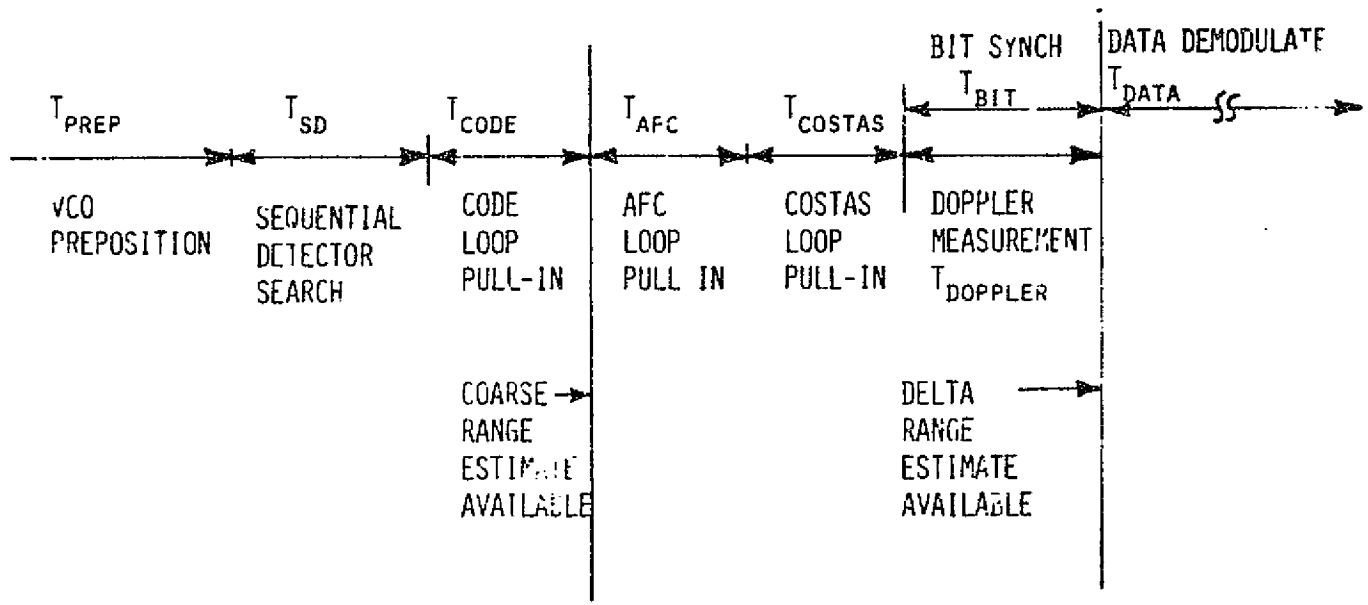

removing this information. In addition if the time was known within 1.5 seconds of GPS system time then the handover word could be computed and the C/A to P transfer could be accomplished without any data demodulation whatsoever.

The remaining components to the TTFF budget are determined by either the initial position and velocity uncertainties or the transient characteristics of the various pieces of hardware that acquire and track the GPS signal. These components are irreducible and constitute the fastest acquisition times possible for a particular set.

The most critical phase in the acquisition procedure is the first phase. During this period of time the initial code phase and code/carrier frequency uncertainties are reduced to the point where the various receiver loops may acquire the GPS signal. This means that the frequency offset must be reduced to the point where the signal falls within the second IF bandwidth (~200 Hz) and the code phase must be reduced to the point where the code offset is within the code loop pull in range (~.5 chip). The chore of reducing the initial uncertainties within the pull in range of the receiver is performed by the sequential detector. It is this circuitry that is influenced the most by the Shuttle uncertainties and dynamics. For this reason the bulk of the LinCom effort in evaluating the acquisition time of the receivers has been concentrated on the sequential detector.

The sequential detector operates as follows. First an initial uncertainty region is specified. This uncertainty region

is specified by the position and velocity uncertainties of the Shuttle vehicle. These position and velocity uncertainties translate into code phase and Doppler offset uncertainties. This code phase and frequency offset uncertainty region must be searched by the sequential detector. The code phase uncertainty region is quantized into 1 chip increments and the frequency uncertainty region is quantized into increments set by the prediction bandwidth (100-500 Hz). Thus the uncertainty region looks like a collection of little tiles or cells with sides specified by ($\delta T x \delta f$). This is illustrated in Figure 10. Once this region is specified the detector may be operated. The following discussion is a simplified description of this sequential detector operation. The circuitry is illustrated in Figures 11 and 12.

First the L.O. is prepositioned to one of the frequencies in the frequency uncertainty region, usually the most likely frequency. This L.O. frequency is used to heterodyne the incoming signal to some IF. Next a local copy of the PN code is generated at a phase somewhere in the code phase uncertainty region. This local PN is multiplied by the heterodyned signal. At this point the signal is considered despread. This IF despread signal is then filtered and then squared. The baseband output of the square is proportional to the instantaneous power in the despread signal. There are two possible values for the average power at the output: a small value equivalent to the noise power and a large value equivalent to the signal power plus noise power.

Figure 10. BOUNDED UNCERTAINTY REGION

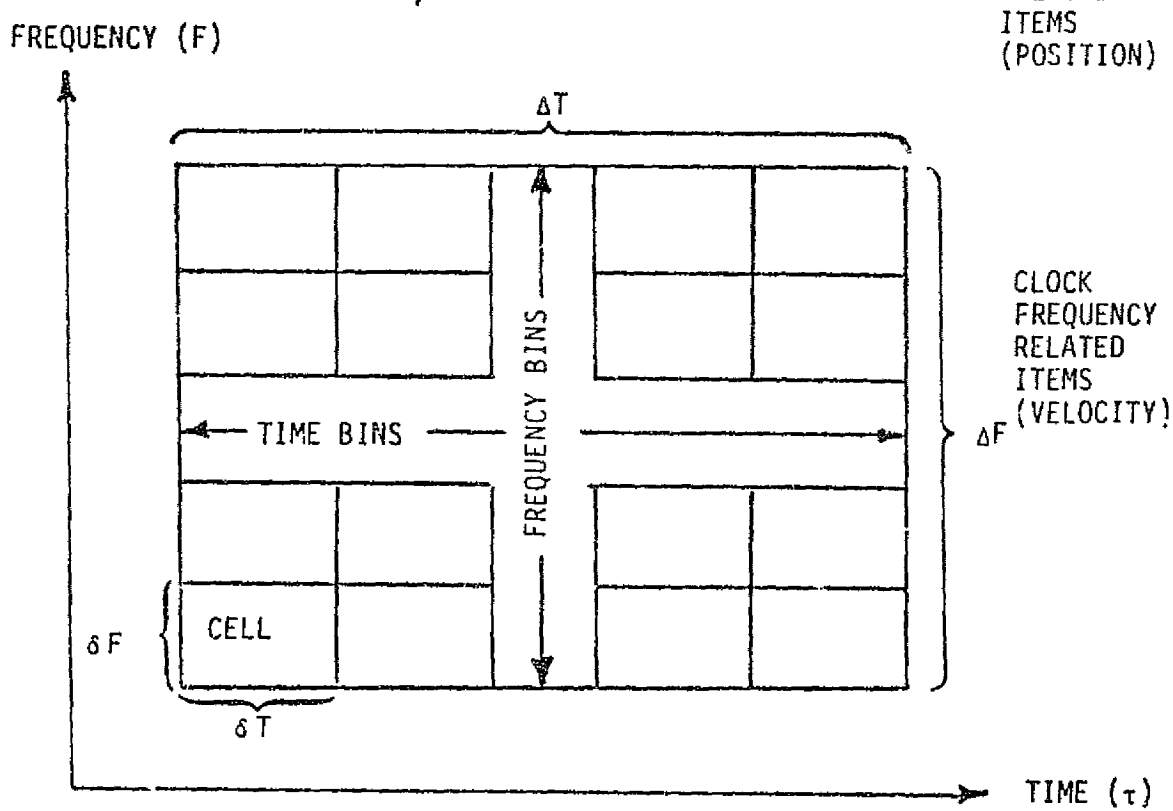

CLOCK PHASE RELATED ITEMS (POSITION)

FACTORS DETERMINING LIMITS OF TIME UNCERTAINTY

1. RELATIVE CLOCK TIMING (CODE EPOCH)
2. PROPAGATION DELAY
3. RELATIVE CLOCK INSTABILITY
4. POSITION UNCERTAINTY

CLOCK FREQUENCY RELATED ITEMS (VELOCITY)

FACTORS DETERMINING LIMITS OF FREQUENCY UNCERTAINTY

1. RELATIVE OSCILLATOR FREQUENCY
2. DOPPLER FREQUENCY
3. RELATIVE OSCILLATOR INSTABILITY

$\delta F \propto$ (DETECTOR BANDWIDTH)

$\delta T \propto 1/$(CODE RATE)

Figure 11. SEQUENTIAL DETECTOR

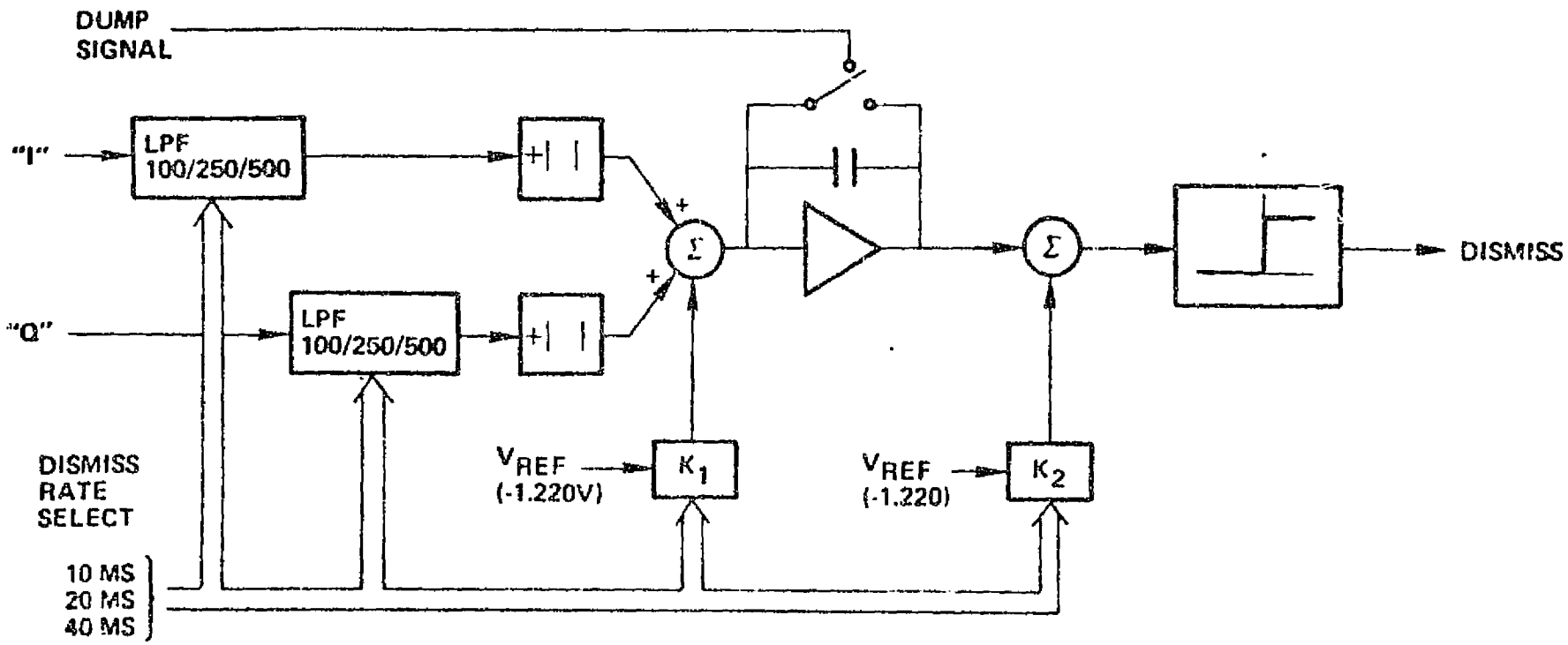

DISMISS	PREDETECTION BANDWIDTH (3 dB)	C/N_0 FOR "ACCEPT"	TIME OUT DURATION FOR "ACCEPT"
10 MS	500 Hz	33 dB-Hz	100 MS
20 MS	250 Hz	30 dB-Hz	250 MS
40 MS	100 Hz	26 dB-Hz	400 MS

Figure 12. PRINCIPLES OF OPERATION OF SEQUENTIAL DETECTOR

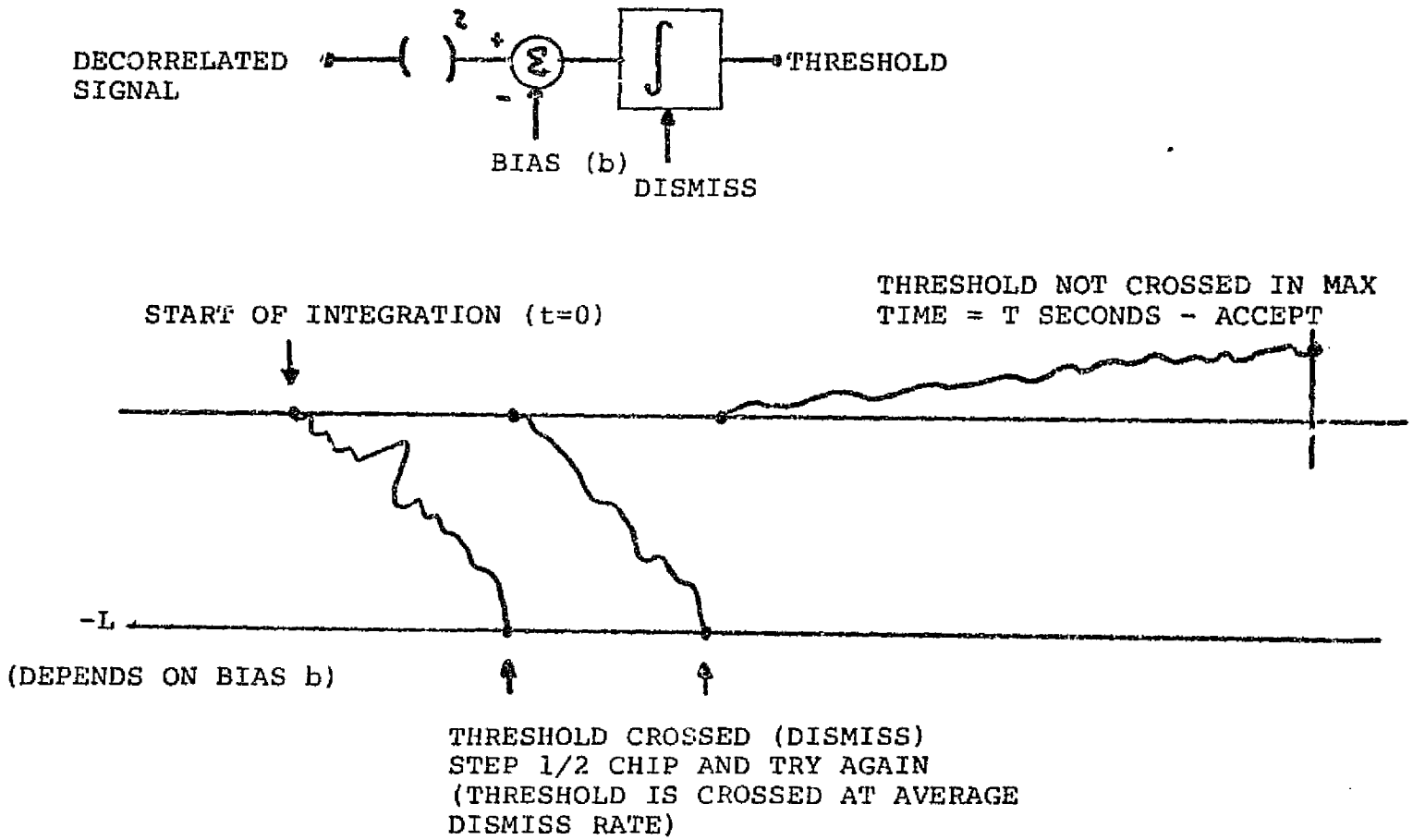

The large value corresponding to signal plus noise will occur only if the L.O. frequency offset from the received signal falls within the predetection filter bandwidth and the local code phase is within some fraction of the received code phase (~.5 chip). The remaining sequential detector circuitry is used to decide whether or not noise power is being observed or signal plus noise power is being observed. This is done by subtracting a fixed bias from the output of the squarer and then integrating. If the output of the squarer is low then the bias term will dominate and the integrator output will tend to ramp with time in a negative direction. When this crosses a fixed threshold, the integration is stopped and the circuitry decides that either the code phase or frequency offset is wrong. A dismiss is declared and either the code phase or frequency offset is incremented. This continues until the correct phase and frequency is found. The advantage of the circuit is that incorrect choices are dismissed quickly and efficiently and the time for acquisition is considerably faster than a fixed dwell type of detector.

The description of the TTFF scenario was motivated primarily by cost considerations consistent with performance suitable for Shuttle use. It was decided that acquisition of the C/A code would be primary acquisition mode of the Shuttle GPS receiver. In spite of the fact

that the P code is superior to the C/A code in both jamming and multipath protection, the P code is far more difficult to acquire than the C/A code. These acquisition difficulties are generally reflected in a more complicated receiver structure and consequently higher cost. The decision to specify C/A as the primary acquisition mode was based on the following three facts:

1. There is no anti-jam requirement from the DOD at this time.
2. Multipath considerations may be neglected. At one time the post-MECO TTFF scenario consisted of a very short TTFF requirement. This small TTFF together with the presence of the large fuel tank obstructing the bottom antenna may have enormously complicated the acquisition problem. Since the TTFF has been considerably relaxed this does not appear to be troublesome.
3. Most GPS receivers presently available acquire the C/A code first and then hand over to the P-code. This results in the simplest receiver hardware configurations consistent with reasonably small acquisition times.

Fact three indicates that if C/A acquisition is acceptable then the receiver structure is considerably simpler than a receiver which must do direct P acquisition. Facts 1 and 2 indicate that the anti-jam and multipath discrimination capabilities of the P-code are not extremely important hence it may be concluded that C/A code acquisition is indeed acceptable.

The two important acquisition scenarios are post-blackout and post-MECO. The post-MECO uncertainties are the absolute worst case values based on one failed motor, one failed IMU platform and one seriously degraded platform. These uncertainties were used to set the post-MECO C/A TTFF requirement. It was also decided that a direct P acquisition mode for the receiver was desirable for redundancy purposes. This was added as insurance since the possibility exists that a particular satellite C/A code generator may be broken, or even worse, the Shuttle/GPS receiver C/A generator may be broken. Since it was decided that direct P acquisition would <u>not</u> be a driver in the TTFF specification, the uncertainties used to specify the direct P TTFF were the nominal uncertainties at MECO, i.e., all motors running up to MECO and nominal platform errors. The post-MECO uncertainties are summarized in Figure 6.

The post-blackout TTFF scenario is defined for C/A acquisition only. The uncertainties at post-blackout are considerably larger than the uncertainties post-MECO, hence, direct-P acquisition is extremely time consuming. In addition, if data demodulation must

be performed then up to 30 seconds per satellite must be allowed in order to remove this data. Considering these two effects then it was decided that C/A acquisition be the driving acquisition mode for post-blackout. The post-blackout scenario is also summarized in Figure 6.

Once the TTFF scenario has been determined then estimates of the total time required to acquire, track, remove data, and compute a fix may be made. This elaborate procedure is summarized in Figure 9. A budget for the time of each event (various loop pull-ins, data demodulation, etc.) is contained in Figure 13. Note that each entry of the budget is fixed except for the time to acquire the code phase, T_{SD}, by the sequential detector. This parameter is a function of the signal to noise ratio and the particular acquisition scenario. T_{SD} is plotted in Figures 14,15,16 for the post-blackout C/A acquisition, post-MECO C/A acquisition and post-MECO direct-P acquisition scenarios respectively. Note that the best minimum C/N_0 of 31.6 dB (34.6 dB C/A) for the P signal is indicated with arrows. This assumes no implementation loss due to hardware anomalies. To account for this 2 dB was allowed for hardware loss and is also indicated on the plots. The time to acquire the code, T_{SD}, is the largest for the post-blackout C/A case. The net result is that the TTFF for all three scenarios is upper bounded by this particular case. TTFF as a function of receiver channels is summarized in Figure 17. Note that the post-blackout TTFF requirement indicates that <u>at least two channels are required</u>.

Figure 13. TOTAL TIME FOR MEASUREMENTS AND DATA EXTRACTION
(ONE CHANNEL, ONE SATELLITE)

T_{PREP}	VCO PREPOSITION (.1s)
$+T_{SD}$	SEQUENTIAL DETECTOR SEARCH (VARIABLE)
$+T_{CODE}$	CODE LOOP PULL-IN (1s)
$+T_{AFC}$	AFC LOOP PULL-IN (.3s)
$+T_{COSTAS}$	COSTAS LOOP PULL-IN (.6s)
$+T_{BIT}$ (T_{DOP})	SIMULTANEOUS BIT SYNCH ACQUISITION AND RANGE MEASUREMENT (1s)
$+T_{DATA}$	DATA COLLECTION (30s)
$33.0 + T_{SD}$ (SEQ. DET.)	

T_{SD} IS SEQUENTIAL DETECTOR SEARCH TIME AND IS ACQUISITION SCENARIO DEPENDENT.

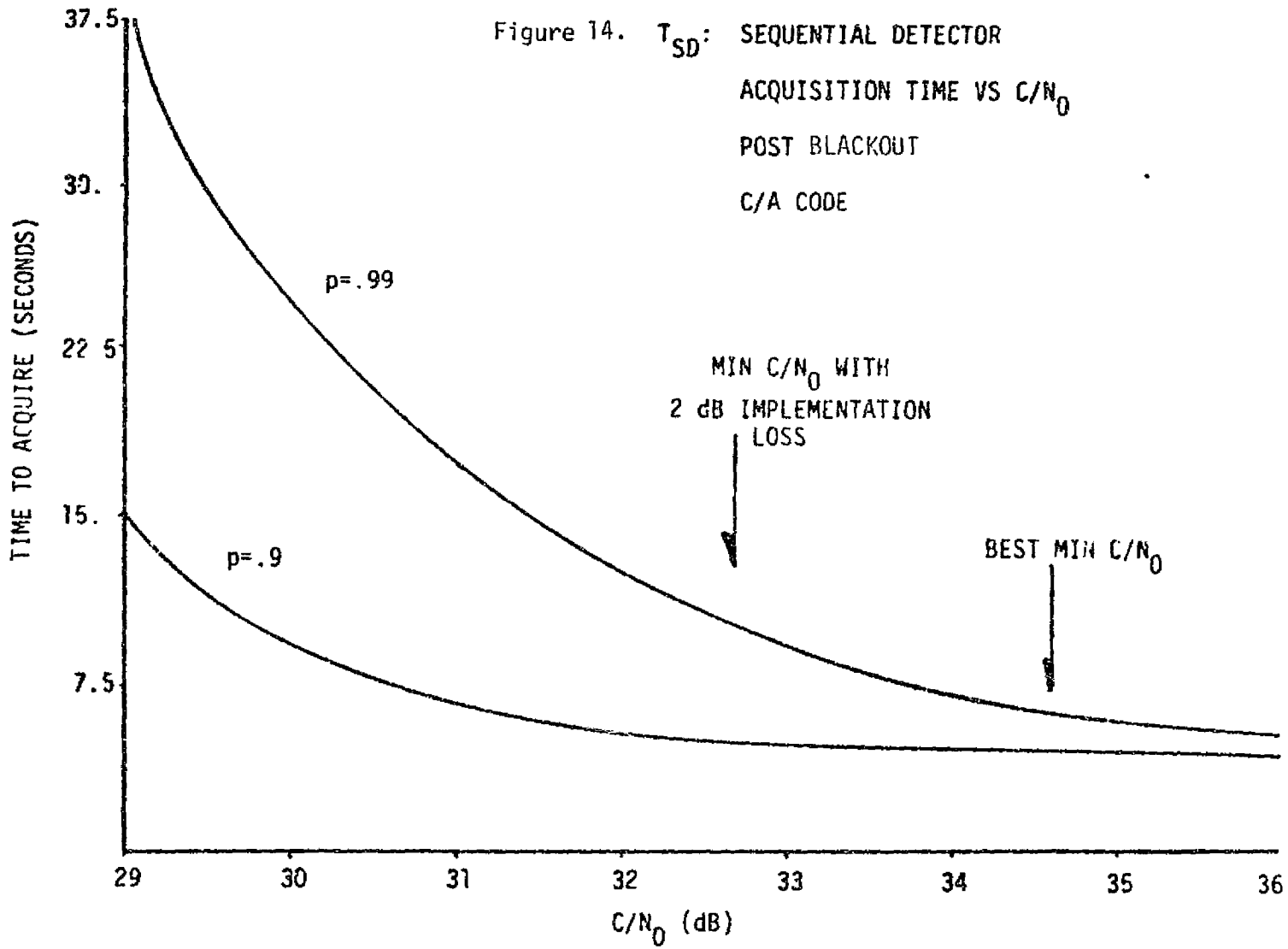

Figure 14. T_{SD}: SEQUENTIAL DETECTOR ACQUISITION TIME VS C/N_0 POST BLACKOUT C/A CODE

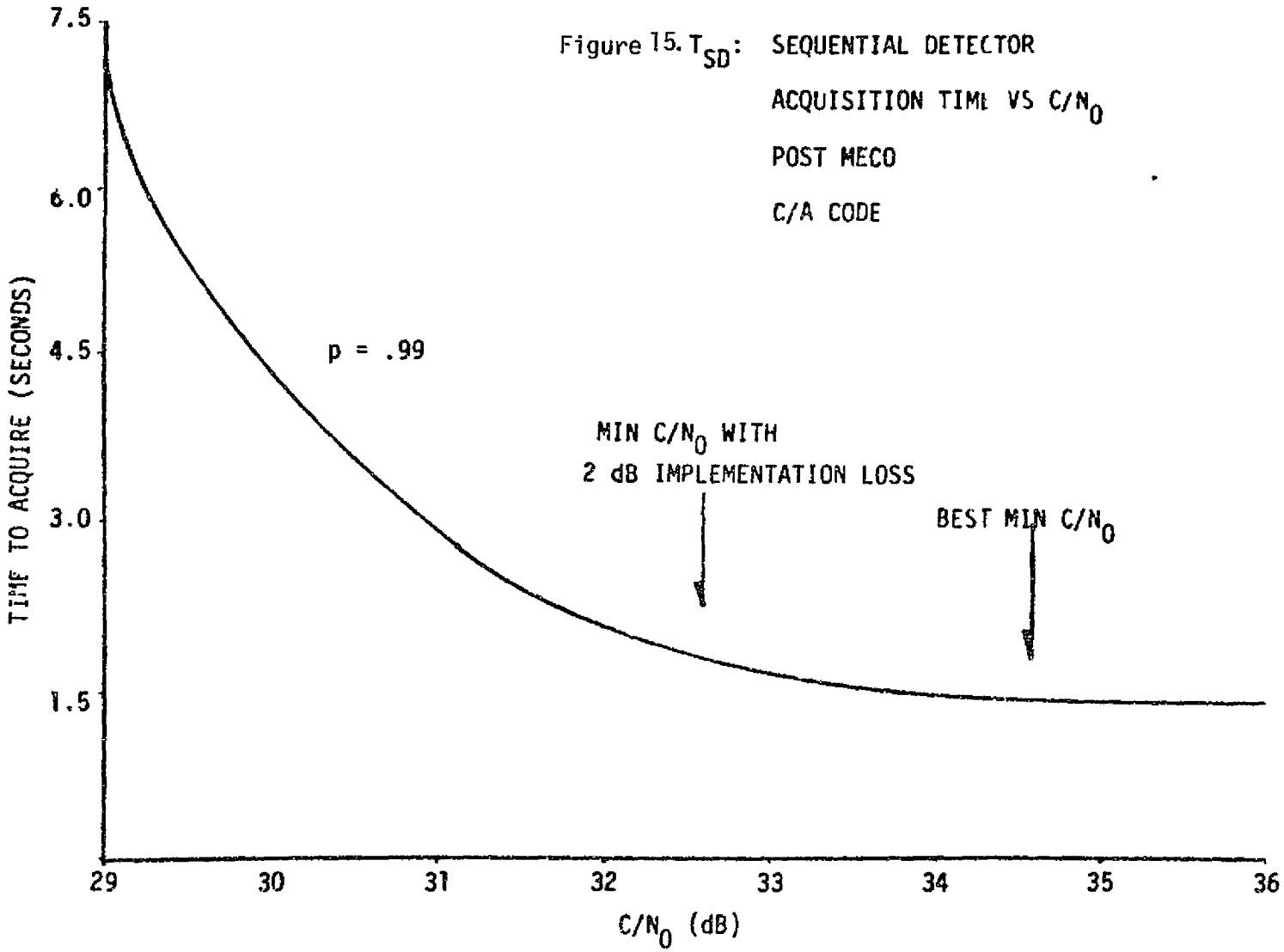

Figure 15. T_{SD}: SEQUENTIAL DETECTOR ACQUISITION TIME VS C/N_0 POST MECO C/A CODE

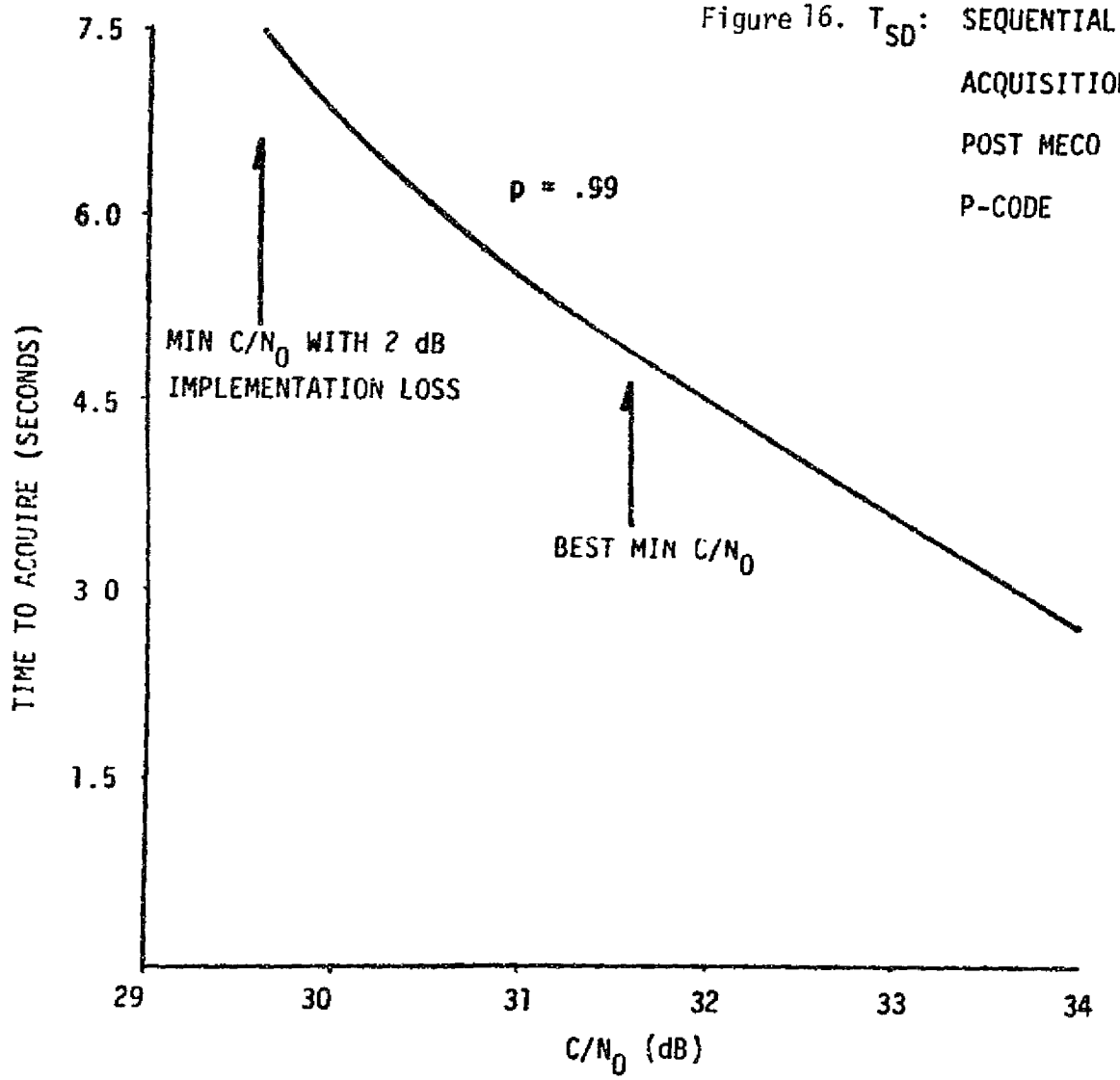

Figure 16. T_{SD}: SEQUENTIAL DETECTOR ACQUISITION TIME VS C/N_0 POST MECO P-CODE

Figure 17. SUMMARY OF TTFF VS NUMBER OF RECEIVER CHANNELS

$T_{SD} \leq 10.5$ SECONDS [FOR ALL THREE SCENARIOS. INCLUDES 2 dB IMPLEMENTATION LOSS.]

FOUR SATELLITES

CHANNELS	1	2	3	4
TTFF	176 s	88 s	80 s	44 s

C. Aiding

The decision whether or not to specify an aided receiver depends upon the dynamics. The type of aiding depends on the severity of the dynamics and upon the hazards of losing lock under the changing conditions. It is clear that some form of aiding is required as the following straightforward analysis indicates. During acquisition it is possible that the maximum velocity of the Shuttle is 9 Km/sec. The sequential detector accept times run between 100 to 400 ms. During this time the range has slipped by 900 to 3600 meters! This corresponds to 30 to 120 chips of P-code or 3 to 12 chips of C/A code, thus even if the correct $\delta T \times \delta f$ cell was chosen the range will have slipped out of the cell long before the detector even realizes this. Thus it is necessary to aid the receiver by sliding the code phase along at a rate proportional to the best available estimate of the velocity.

This velocity estimate must come from an initial platform or IMU. The IMU output can be used either directly by the receiver (with some minimal processing) or the IMU output may be used to update the GPC state vector and then this state vector is propagated forward in order to account for the continuing range shift. Direct IMU aiding is necessary only in the severest of dynamic environments. This is because the sampling rate and computational lag associated with IMU aiding are the limits on the utility of the aiding. These lags and finite sample times result in aiding that does not completely cancel the dynamic effects. Magnavox results indicate that the fastest the

IMU's may be sampled is about 100 ms with about a 10 ms computation lag, thus, direct IMU aiding need only be considered if the dynamics produce significant unpredictable range and Doppler shifts over periods of 100 ms. Since the bulk of the Shuttle transients are rather sudden with durations of approximately 20 ms and produce small changes in range and velocity then it appears at this time that direct IMU aiding will not be required.

It is essential that state aiding be available from the GPC during acquisition. The above illustration of range shift during acquisition indicates that an initial position and velocity estimate be available to not only set the $\Delta T \times \Delta f$ search region but to also preposition the code loop VCO frequency so that the detector has a reasonable amount of time to dwell on a reasonably stationary signal. In addition state aiding will be necessary during operation of a sequential set. This form of preposition aiding is generally available from the R/PA filter contained in the receiver.

D. Dynamics

The Shuttle dynamics are crucial to the specification of a GPS receiver suitable for the Shuttle environment. The problem of dynamics has already been introduced in the previous section on aiding. These dynamics affect all sections of the GPS receiver including code loop, AFC and Costas loop. In addition, these dynamics determine the suitability of a sequential receiver. Some initial effort has been performed in evaluating the use of a Magnavox GPSPAC in the Shuttle environment.

The GPSPAC contains two single channel sequential receivers. The basic sequential cycle time for these receivers is 6 seconds. This 6 seconds is budgeted between the L_1 and L_2 frequencies of a particular satellite, three seconds on L_1 and three seconds on L_2. At the beginning of the 3 second dwell interval the VCO must be prepositioned in frequency and the local code generator must be prepositioned in phase. The latest fix information is obtained 3 seconds earlier from the latest range update and propagated forward three seconds to the time when the VCO and coder require prepositioning. This is illustrated in Figure 18. This propagating forward is done with unmodeled acceleration, hence, the acceleration during this time will shift the range by a few P-code chips. This is illustrated in Figure 19. Based on present best estimates of the Shuttle on orbit dynamics from R. Strelow/ Rockewll it may be seen that the range shifts by an additional 2.5 chips during these three seconds. Since the GPSPAC automatically initiates a ± 3 chip search at the beginning of the three second interval then the GPSPAC will reacquire the signal as long as the initial position estimate was within .5 chip (15 meters). While this may be possible on orbit it remains to be seen whether or not this accuracy is available in a sustained track mode upon re-entry. In addition, any transients that occur during the three second interval further distinct the range and can cause the range to shift outside the ± 3 chip aperture. The affect of the OMS burn and RCS transients are summarized in Figure 20. The

LinCom

Figure 18. THE SEQUENTIAL MEASUREMENT PROCESSING SEQUENCE (MAGNAVOX GPSPAC)

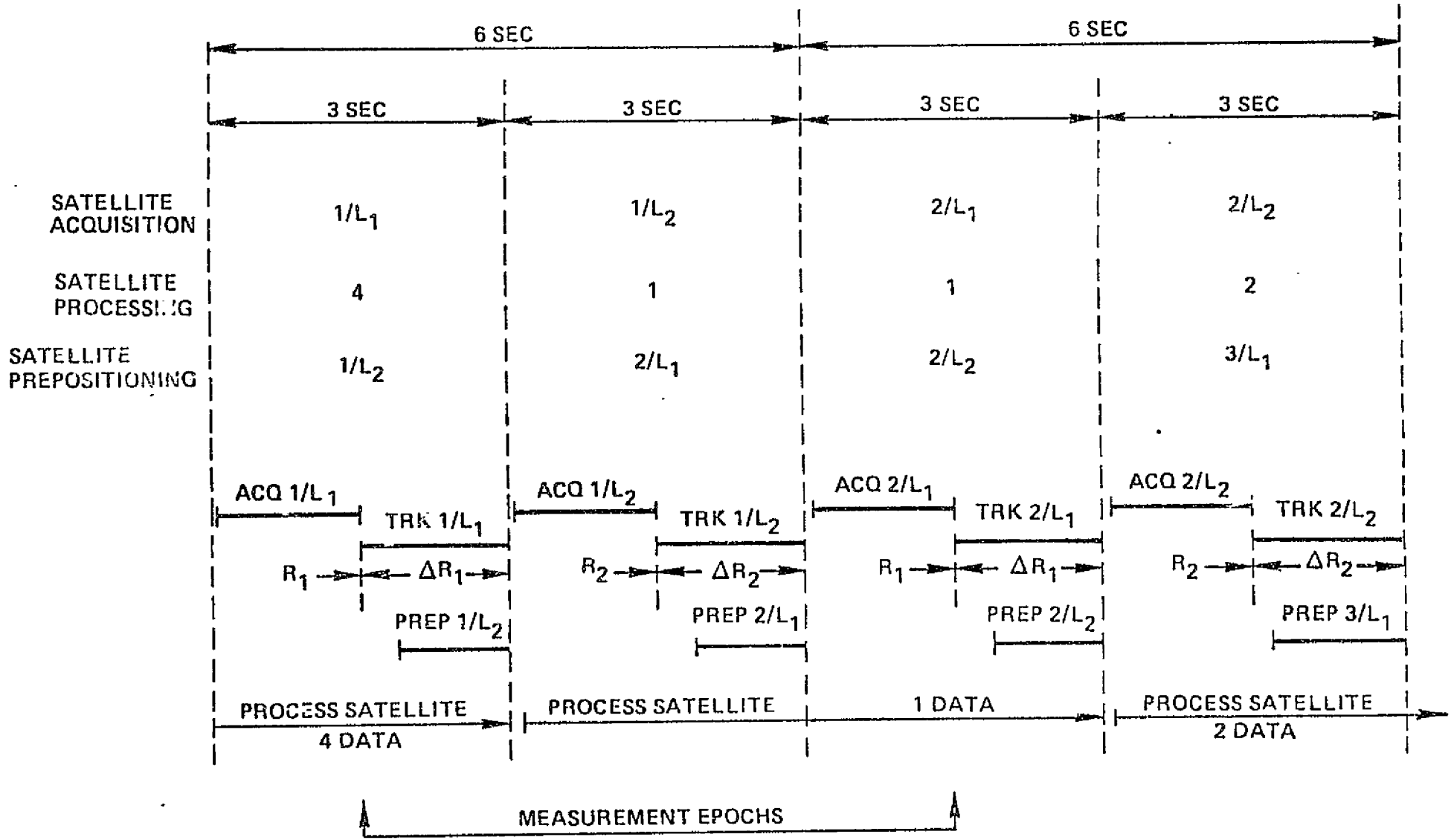

Figure 19. RANGE SHIFT FROM LAST FIX VS TIME

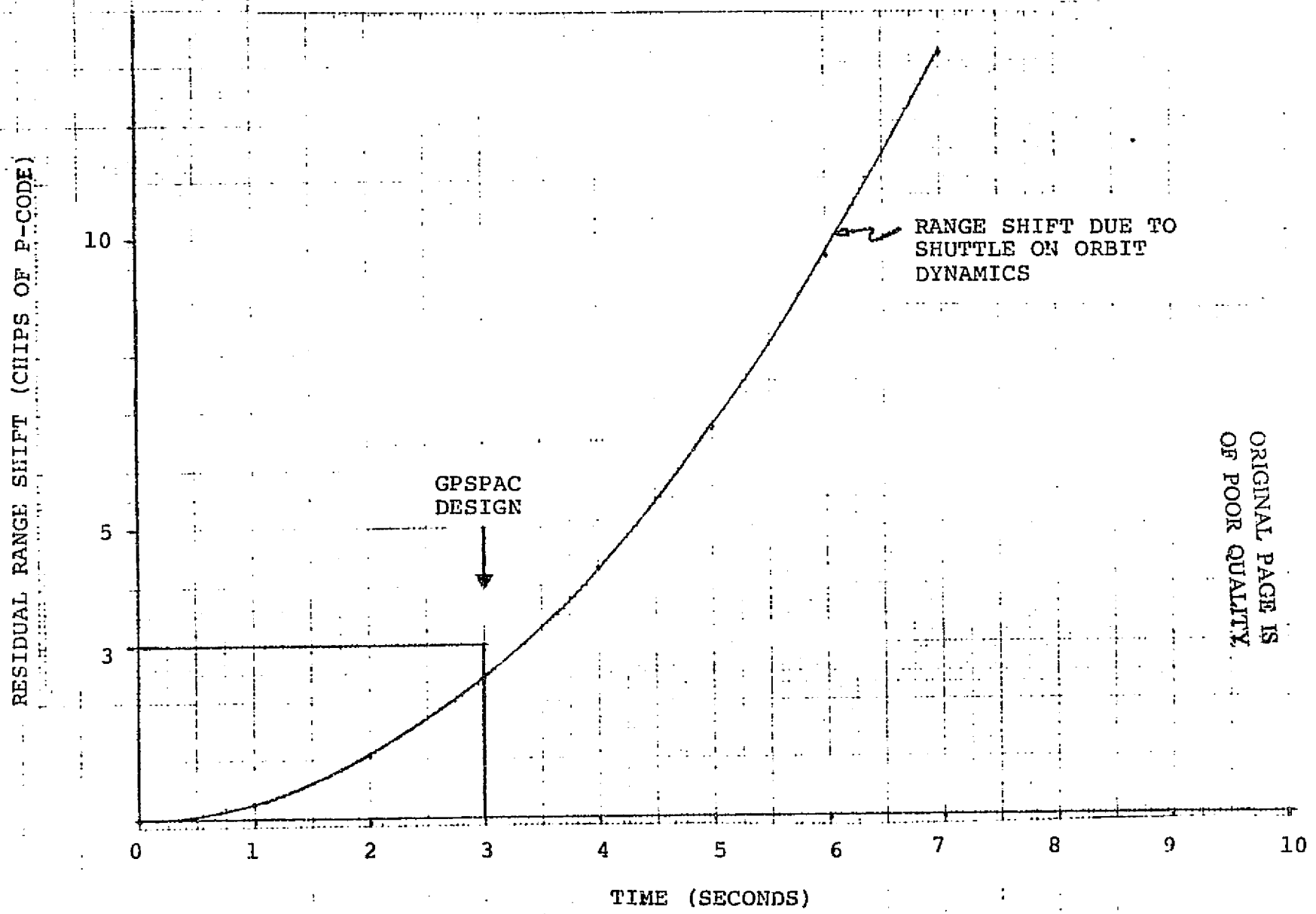

ORIGINAL PAGE IS OF POOR QUALITY

Figure 20. EVALUATION OF KNOWN SHUTTLE TRANSIENTS AND THEIR EFFECTS

- RCS TRANSIENT CHARACTERIZED BY EXTREMELY HIGH JERK PULSE
  - DOMINANT EFFECT IS INDUCED ACCELERATION OF 2.6 M/SEC^2
  - INTRODUCES ADDITIONAL .4 CHIP (P-CODE) OF OFFSET THAT MUST BE SEARCHED
- OMS BURN TRANSIENT CHARACTERIZED BY HIGH JERK PULSE FOLLOWED BY CONSTANT ACCELERATION
  - DOMINANT EFFECT IS FINAL ACCELERATION OF .84 M/SEC^2
- RCS TRANSIENT IS WORST CASE

RCS transient is the worst case since it introduces an additional .4 chip range shift. The GPSPAC search aperture may need to be opened by an additional chip if the receiver is to track through this particular transient without dropping into a reacquisition mode. A summary of sequential receiver properties as they apply to Shuttle on orbit and OMS/RCS transients is listed in Figure 21.

After the seqeuntial detector has successfully reduced the code phase uncertainties to approximately .5 chip, a code loop is activated that reduces this error to approximately .05 chip. A typical early-late gate type of code tracking loop is illustrated in Figure 22. The GPS receivers employ a τ-dither loop which essentially time shares the early and late versions of the code phase. The τ-dither loop performs approximately the same as an early-late gate loop in the presence of dynamics, although the SNR in the early-late gate loop is 3 dB larger than the τ-dither loop. The ability of the code loop to reduce the code phase error in the presence of dynamics depends on the loop filter design. The GPSPAC receiver uses a first order loop noise bandwidth of approximately 1.6 Hz. The choice of a first order loop allows the loop to settle quickly, unfortunately, the dynamics must be zero (i.e. only phase offset) or the loop will be gradually pulled out of lock. If some method is supplied to remove

Figure 21. SUMMARY OF SEQUENTIAL RECEIVER DESIGN (SEQUENCING STRATEGIES)

RECEIVER	COMMENTS	APPLICABLE TO SHUTTLE DYNAMICS (INCLUDES ON ORBIT & BURN DYNAMICS)
X-SET	CONTINUOUS FOUR CHANNELS PLUS CODE CHANNEL	✓
Y-SET	ONE CHANNEL PLUS CODE CHANNEL - SEARCHES 3g or 6g APERTURE (±1 to 2 chips estimated)	✓
Z-SET(C/A)	1 CHANNEL - CYCLE TIME 1.2 SECONDS - NO SEARCHES - ASSUMES CODE OFFSET LESS THAN .5 CHIP - CAN PULL IN ON C/A CODE	✓
MANPACK	1 CHANNEL - CYCLE TIME 1.8 SECONDS - NO SEARCHES - ASSUMES CODE OFFSET LESS THAN .5 CHIP	NO
GPSPAC	2 CHANNELS (2 MODIFIED MANPACKS) - CYCLE TIME 3 SECONDS - SEARCHES ±3 CHIPS AT BEGINNING OF DWELL	✓

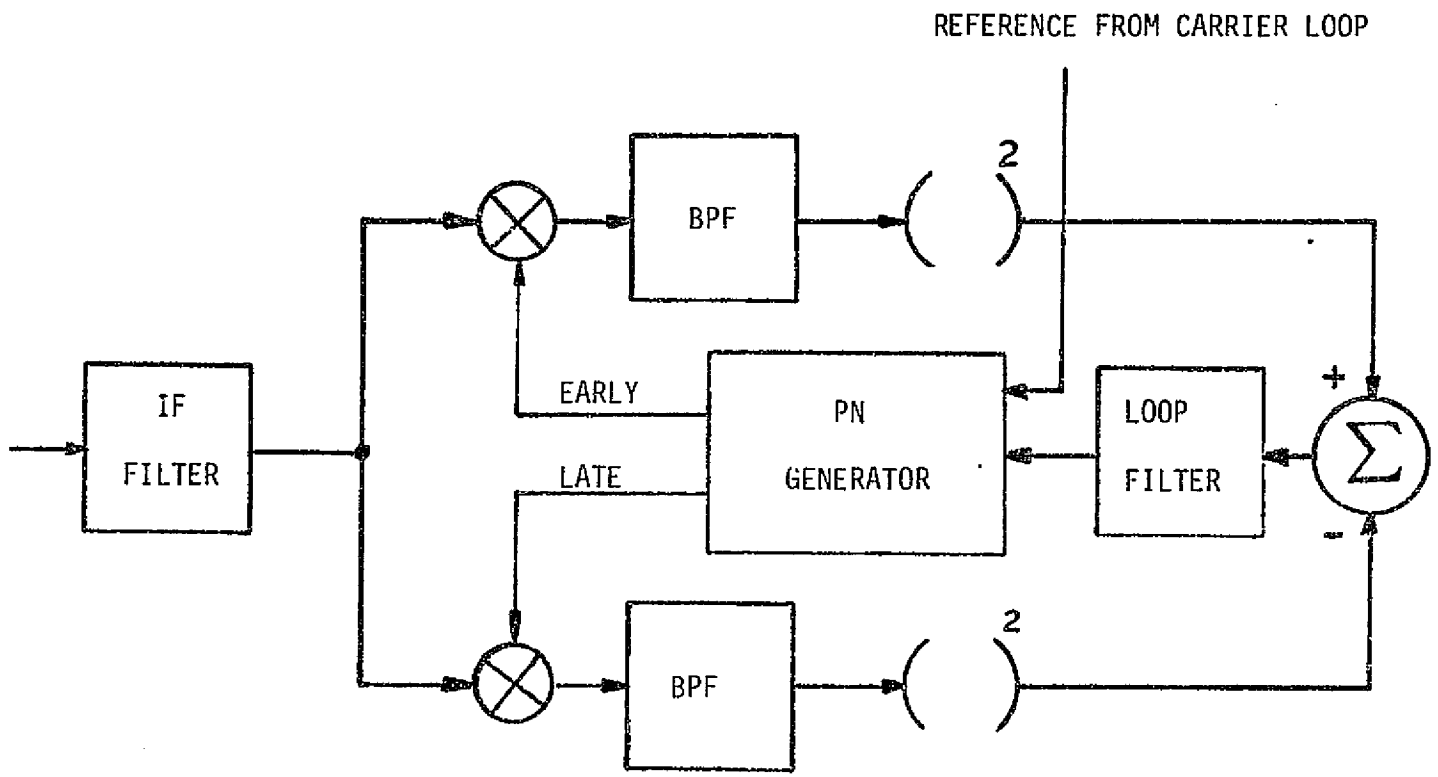

Figure 22. Early-Late Gate Code Tracking Loop.

the dynamics then the code loop will eventually track out the .5 chip offset. The velocity (Doppler) dependent part of the code phase offset is removed by using the (frequency) divided output of the carrier tracking (Costas) loop as the frequency reference for the code loop. While this is effective in the steady state, the code loop must be stable enough during the period of time the code loop is turned on until the carrier loop acquires. The carrier loop is a higher order loop. For the GPSPAC it is a second order loop, X-set a third order loop and the MBRS uses a fourth order loop. The second order loop will remove the frequency offset (Doppler) drifts that are induced in the carrier phase. By using the frequency divided output of this carrier loop as the frequency reference for the code loop then the Doppler dirfts induced in the code loop are also eliminated. The higher order loops are necessary in large dyanmic situations since they are capable of tracking out higher order derivatives of the range such as acceleration and jerk.

The effects of the Shuttle dynamics on the code loop pull in are illustrated in Figures 23 and 24. In Fig. 23 it is assumed that Doppler aiding is <u>not</u> available from the second order carrier tracking loop. Clearly the Doppler offset effects dominate the residual code tracking error. The Doppler results in a static phase error of about .3 chips. The remaining Shuttle dynamics of acceleration and jerk conspire to increase the phase error as a function of time. Figure 24 illustrates the benefits of removing the Doppler offset term.

Figure 23. CODE LOOP OFFSET DURING ACQUISITION (P-CHIPS) VS TIME
(NO RATE AIDING FROM COSTAS LOOP)

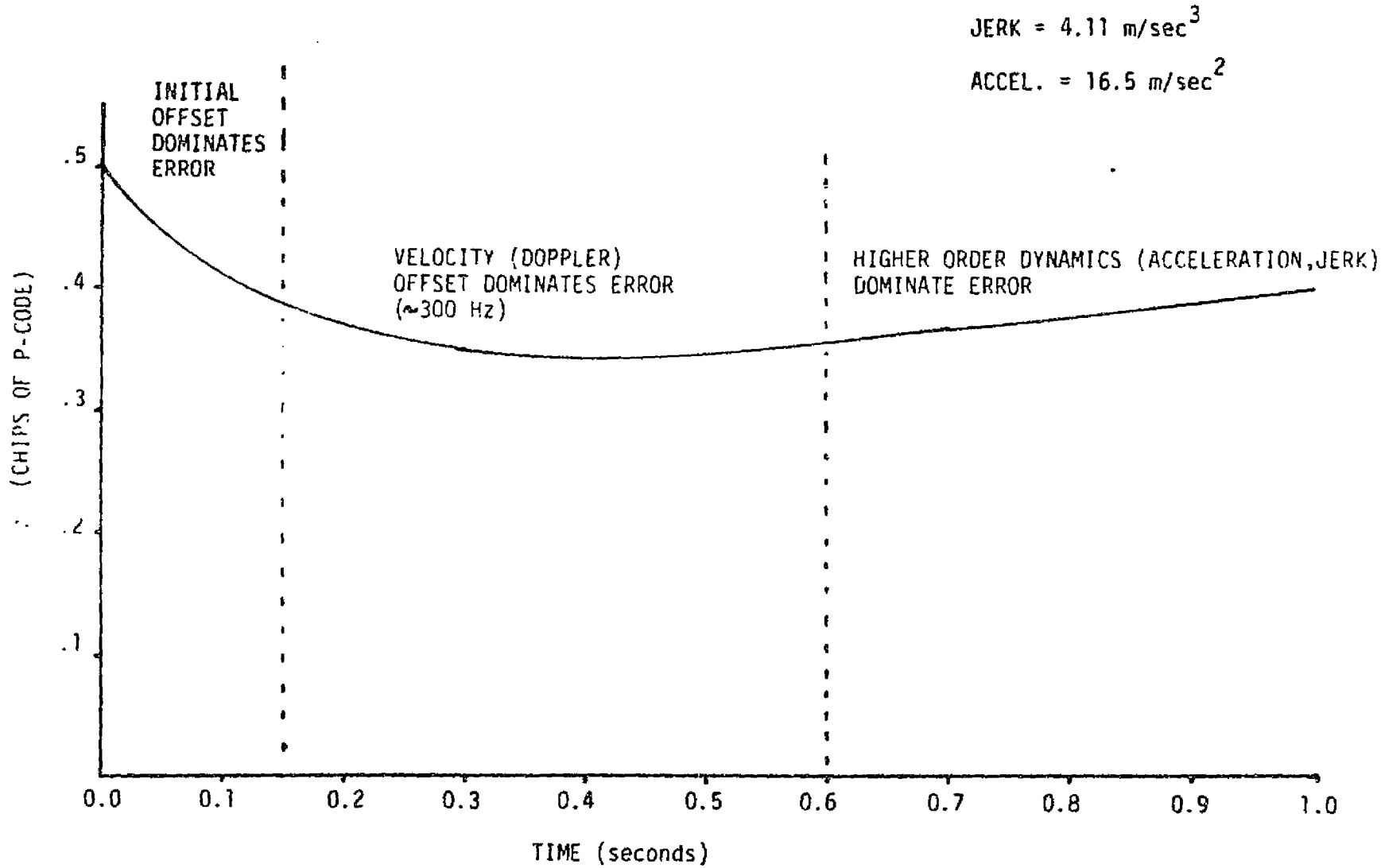

Lin

Figure 24. CODE LOOP OFFSET DURING ACQUISITION (P-CHIPS) VS TIME (INCLUDES RATE AIDING FROM COSTAS LOOP (AFC))

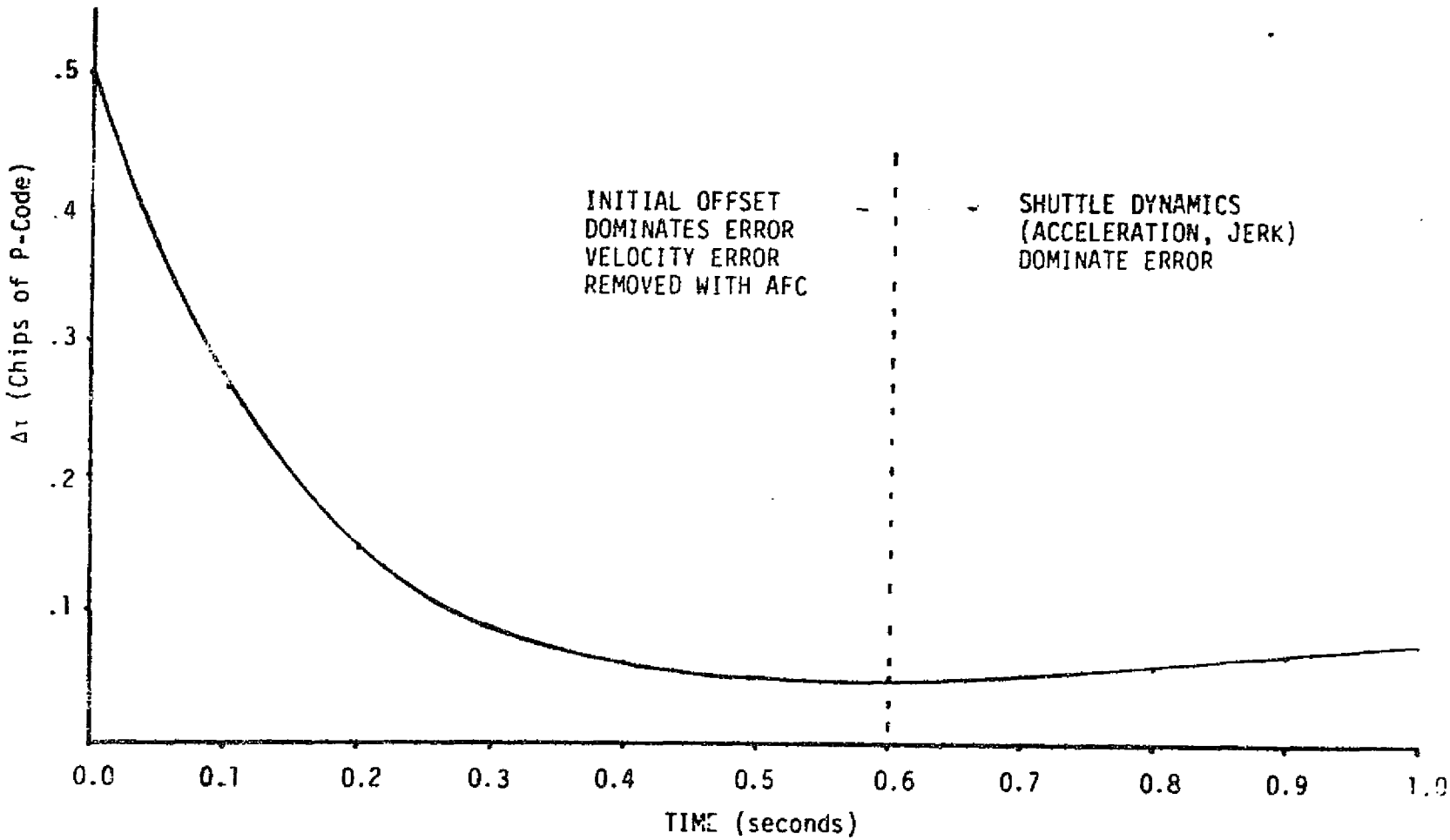

The static error is much smaller (ideally zero for a perfect second order loop) and is a minimum of about .05 chips. Note that the residual acceleration and jerk effects are not removed. These residual dynamic terms eventually build-up to about .35 chips of P code after 3 seconds. This corresponds to approximately 1.9 dB loss in SNR. This 1.9 dB loss in SNR together with approximately 2 dB hardware implementation loss results in a RMS phase variance of 15.3° in the Costas loop just due to thermal effects. This is probably not too serious since the Costas loop bandwidth can be tightened a little and the code loop bandwidth widened a little so that this problem is reduced. This problem only exists for P-tracking. Since the C/A chip is 10 times longer than the P-chip the affect after 3 seconds is only .035 chips of C/A for a SNR loss of .15 dB. This is negligible since the C/A signal level is 3 dB higher than the P-code.

Acquisition of the carrier frequency is aided with an automatic frequency control (AFC) circuit. The frequency uncertainty after code acquisition by the sequential detector can be as high as 300 Hz. Since the loop bandwidth of the carrier (Costas) tracking loop is about 35 Hz (GPSPAC), the acquisition time for frequency affects in excess of the loop bandwidth are extremely long. For this reason the AFC has been added to most GPS receivers in an effort to quickly reduce the frequency offset to well within the carrier loop bandwidth. An AFC is illustrated in Figure 25. This AFC is typical of the Magnavox circuits and is simply a baseband version of a discriminator. The acquisition behavior of an AFC is fairly easily analyzed using quasi static assumptions which are valid when the low pass filter

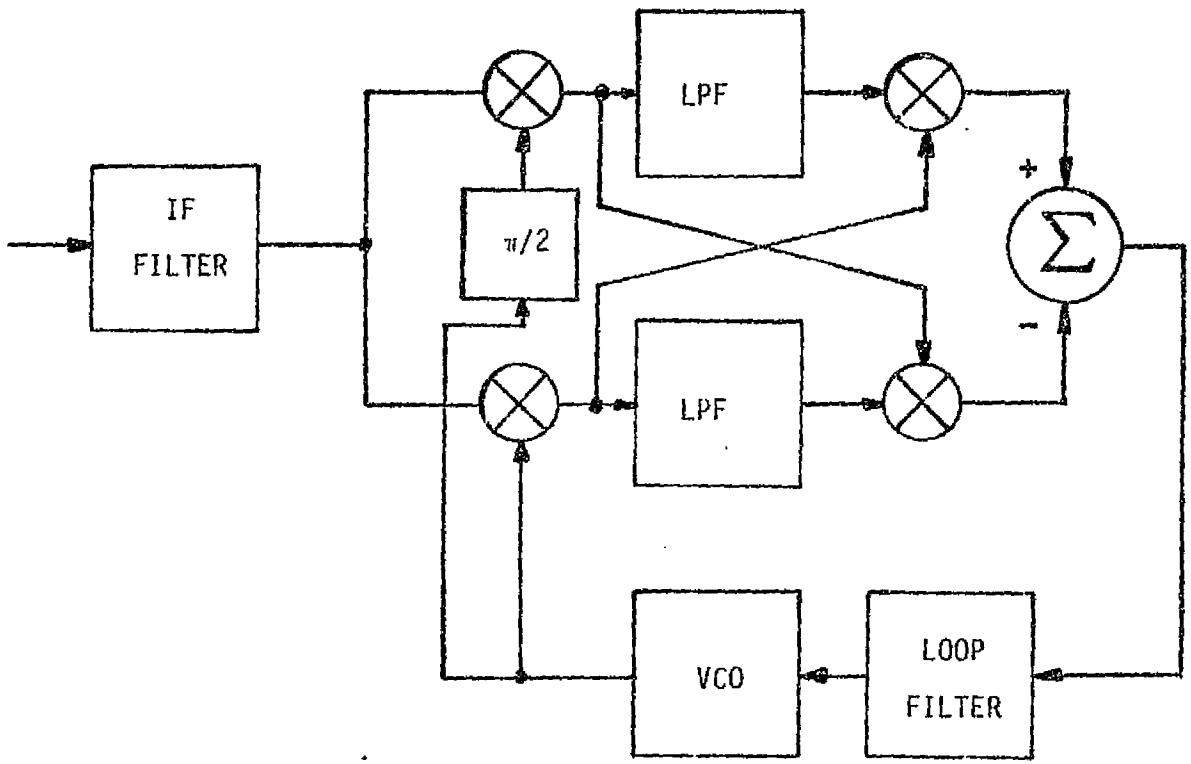

Figure 25. Typical AFC Circuit.

Figure 26. AFC FREQUENCY OFFSET DURING ACQUISITION (Hz) VS TIME

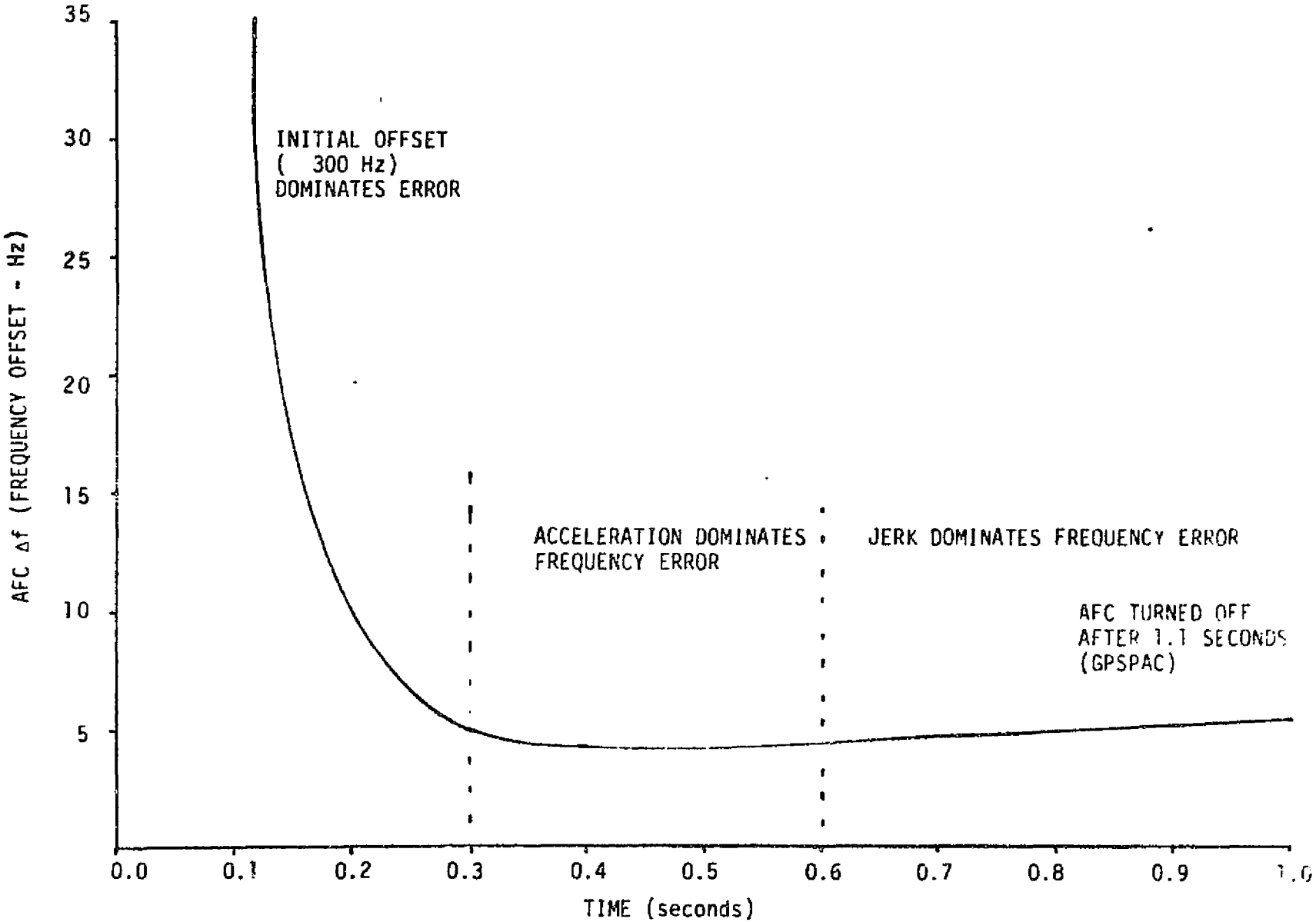

bandwidth is larger than the loop bandwidth. The GPSPAC AFC bandwidth is approximately 5 Hz. The acquisition behavior of this AFC is illustrated in Figure 26. The loop is first order (in frequency) hence is capable of reducing the frequency error to within the AFC loop bandwidth if the higher order derivatives of the range are zero. As may be seen from Figure 26 the AFC reduces the frequency error to about 7 Hz within .3 seconds. After this the acceleration and jerk start to push the VCO away from the input frequency. The AFC is turned off after 1.1 seconds since the Costas loop has finally acquired after this length of time. The Costas loop is capable of tracking out the remaining 7 Hz offset.

After the AFC loop has reduced the frequency error to within the Costas loop bandwidth then the Costas loop may be switched on and allowed to pull-in. Evaluation of phase locked loop acquisition is extremely difficult and the reader is referred to Reference 1 for analysis in the area. A Costas loop suitable for the tracking of biphase modulated carriers is illustrated in Figure 27. The total acquisition time may be approximately split into two parts, frequency acquisition and phase acquisition. Total time to acquire as a function of frequency offset is illustrated in Figure 28. Note that for offsets of approximately 7 Hz the acquisition time is less than .45 seconds. This is within the .6 seconds allowed for Costas loop acquisition. Once the Costas loop has acquired it must maintain lock under the worst case Shuttle dynamics. The residual frequency error of approximately 7 Hz results in a steady state phase error for imperfect second order PLLs (GPSPAC) of .54°. This is extremely small relative to the thermal effects. The Shuttle vehicle acceleration

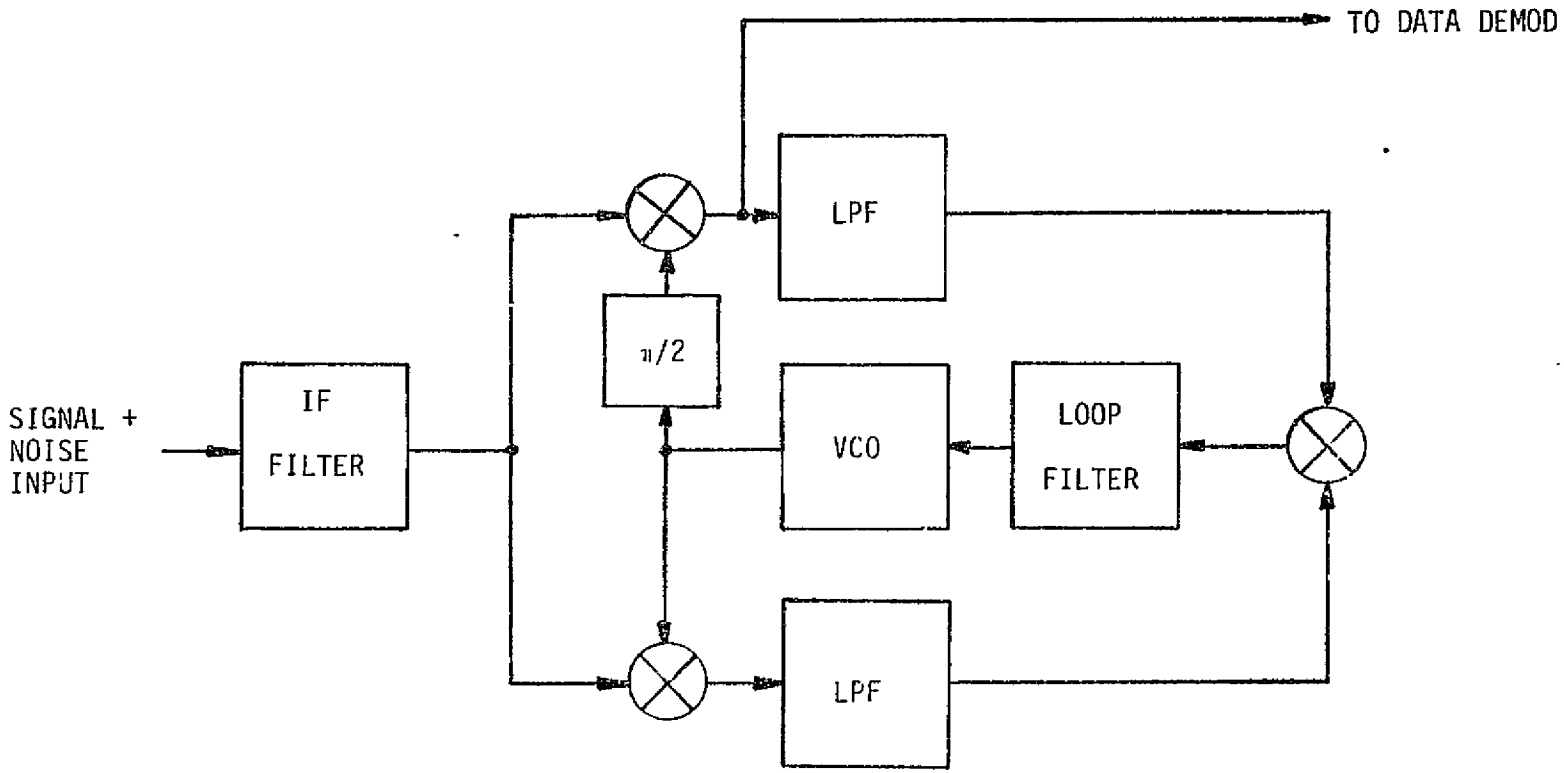

Figure 27. Typical Costas Loop for BPSK.

Figure 28. COSTAS LOOP TIME TO ACQUIRE UNDER FIXED FREQUENCY OFFSET (GPSPAC RECEIVERS)

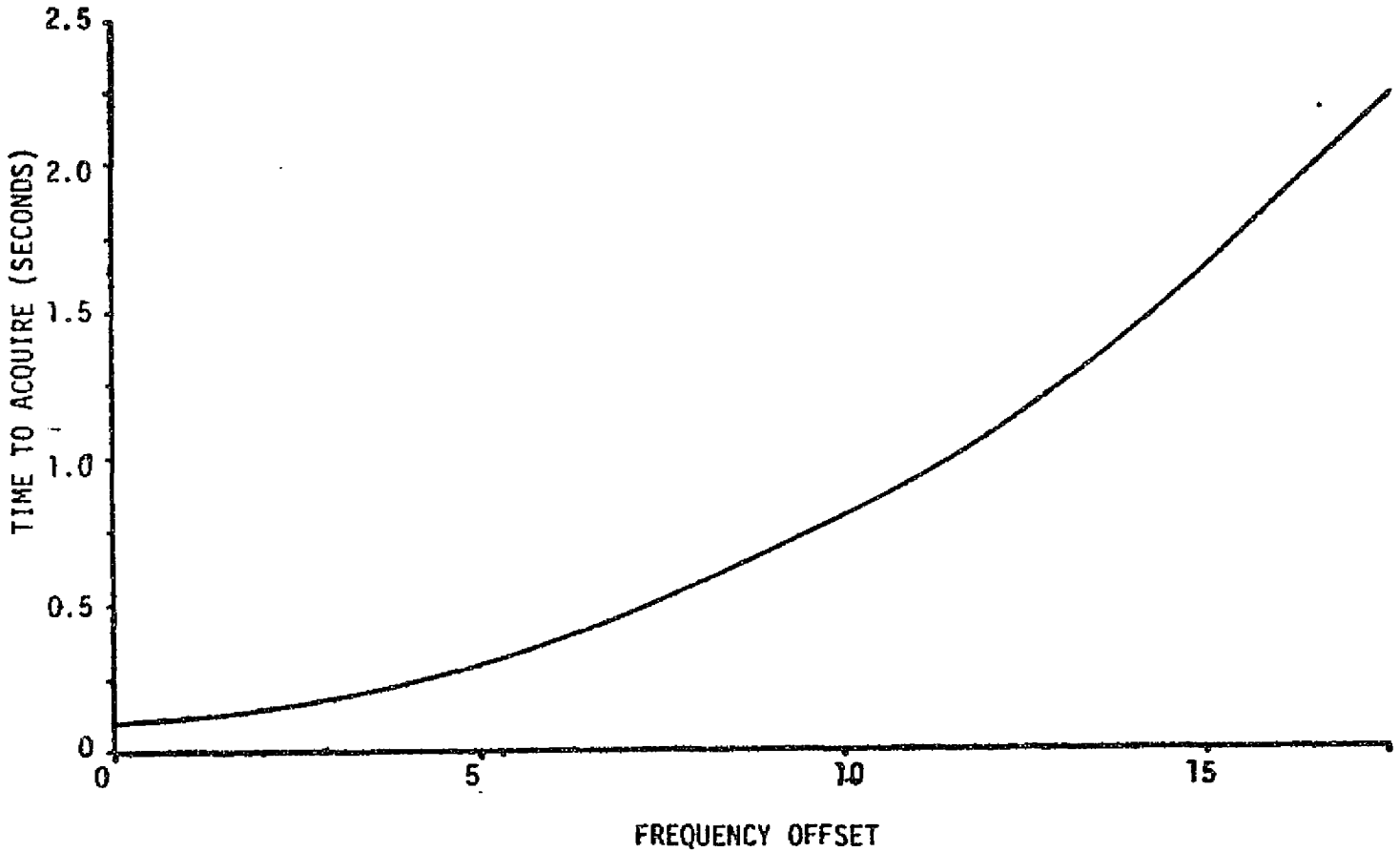

results in a steady state frequency error of 1.26°/second. This frequency error corresponds to about 1.4 $\times 10^{-3}$ meters of error in the delta range measurement and negligible loss in E_b/N_0 for data demodulation. These are extremely small relative to thermal effects.

In conclusion it has been shown that the worst case vehicle dynamics are those experienced in entry. This corresponds to about 16.5 m/sec^2 and 4.1 m/sec^2 for the maximum acceleration and jerk respectively. For the C/A code the loops will all lock up. This includes the code loop, AFC, and Costas loop. For the P-code, there may be a problem with loss of lock, reduced E_b/N_0, etc. under maximum Shuttle dynamics since the code loop slips by approximately .35 chips in the two seconds that the code loop must maintain lock. It should be noted that this is peculiar only of the GPSPAC receiver and that a different choice of bandwidths would reduce this effect considerably. A high dynamics receiver with more channels and higher sampling rate does not suffer from this problem.

E. Phase Noise

The GPS receivers may be operated with an external oscillator. In the case of the GPSPAC receiver it is necessary to supply an external oscillator. Since all oscillators are somewhat noisy it is necessary to estimate the effect of this noise on receiver performance.

The oscillator phase noise enters the system in the following manner. The oscillator is multiplied by a large number (~300) and then used to heterodyne the incoming signal to IF. The oscillator noise is on the phase of the LO signal, thus the IF signal contains the LO noise on the phase of the signal. Ultimately the receiver phase locked loops must contend with the phase noise.

Some of the phase noise may be tracked out. The components of the phase noise spectrum that are removable are those that fall within the loop bandwidth. Those falling outside the loop bandwidth contribute to the phase fluctuations. The upper limit to the phase noise spectrum is set by the IF filter. The GPSPAC receiver IF bandwidth is $\sim$ 100 Hz (one-sided) and the Costas loop bandwidth is $\sim$35 Hz (one-sided).

The phase noise impacts the ability of the loop to track the signal. Since the carrier reference is needed in order to demodulate the data and perform Doppler estimates then both these functions are degraded. A description of the MTU type oscillator has been obtained from John Ho of FEI. This spectrum is illustrated in Figure 29. Phase noise with this particular spectrum induces an additional jitter in the data demodulator and frequency measurement processes. The rms fluctuations are σ_ϕ = .060° of phase and $\sigma_{\Delta f} = 2.6 \times 10^{-4}$ Hz of frequency. These are also small compared to thermal effects.

7.0 Anti-Jamming Properties of C/A Code

This section contains a description of the anti-jamming capability of the C/A code. There seems to be some misunderstanding about the ability of the C/A code to provide jamming immunity. This section contains a brief description of the jamming immunity provided by the particular C/A codes. It is shown that for CW jammers the C/A code is <u>not</u> 10 dB worse than the P-code, in fact is is much worse.

Figure 29. FEI OSCILLATOR
(MTU TYPE)
PHASE NOISE SPECTRUM
4.6 MHz

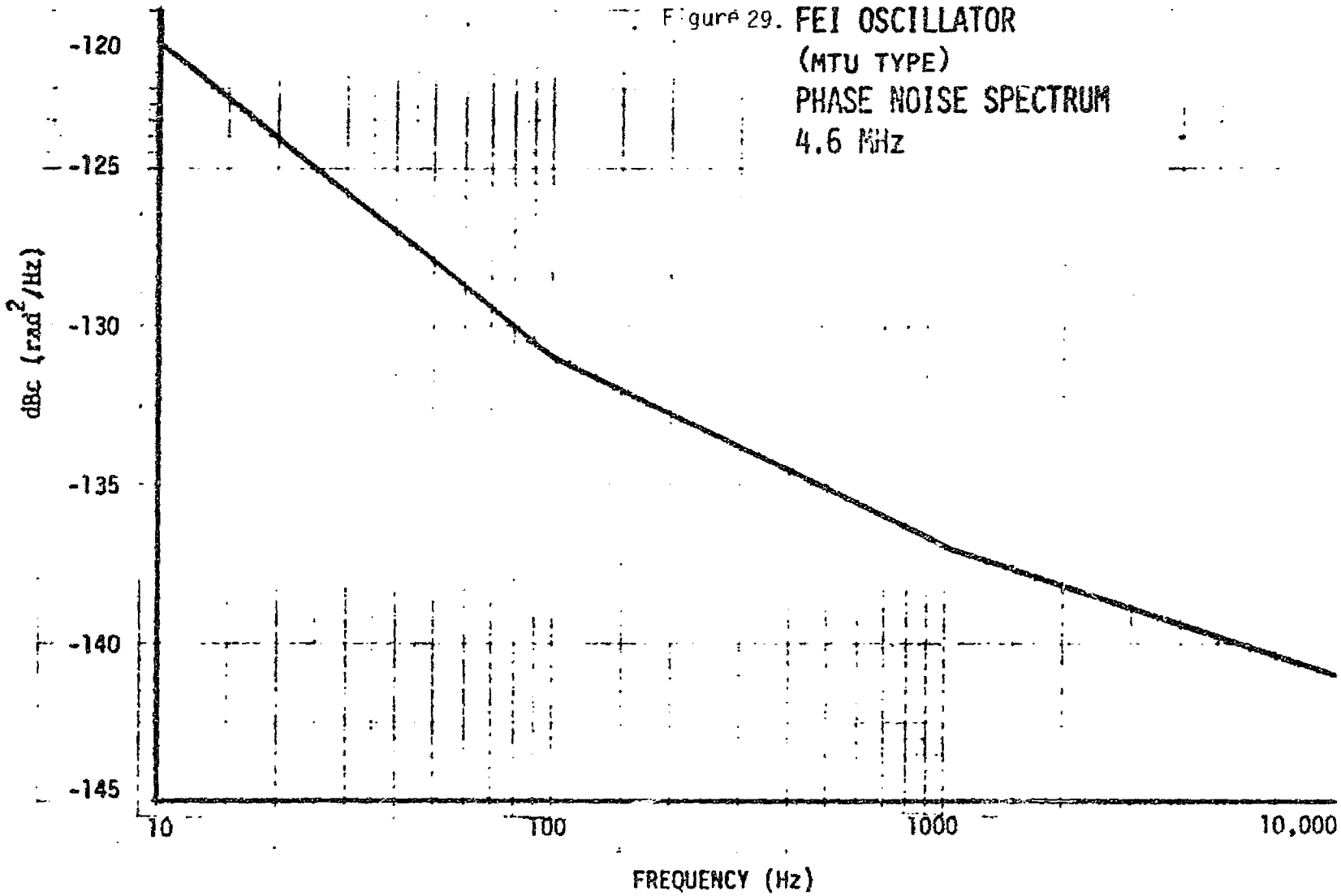

ORIGINAL PAGE IS
OF POOR QUALITY

A typical direct seqeunce spread spectrum receiver is illustrated in Figure 30. For the purposes of this illustration an integrate and dump type detector was chosen. Note from the illustration that the input to the detector is Ad(t) (the desired data) plus J·P(t) (the jamming amplitude x PN). The integrator output is A·d(t)·T plus the summation of all the PN chips over the interval. This summation behaves approximately like a Gaussian random variable with variance $J^2\tau_c \cdot T$ where J is the CW jamming amplitude τ_c is the PN chip duration and T is the integration time. This is true only if the period of the code exceeds T seconds. Thus the rule of thumb for the jamming immunity of PN sequences can be readily derived, i.e., J/S (dB) = code bandwidth/detector bandwidth (dB) - 3 dB - desired E_b/N_0 (dB). For 50 bits per second data and a 10 m chips/second (P-code) spreading seqeunce the maximum jamming immunity is about 50 dB for a required E_b/N_0 = 10 dB (BER = 10^{-5}). Unfortunately this expression is only valid for the case where the period of the code is longer than the integration time. For the C/A code this is not the case since the period of the code is 10^{-3} seconds. Since the integration time of the data detector is 20 x 10^{-3} seconds for the GPS data then 20 copies of the C/A code occur during the integration time of the detector. This is illustrated in Figure 31. Since the pattern repeats during the integration time the jammer is not completely randomized since the same chips keep reappearing. The expression for jamming margin must be modified by subtracting the number of times the code repeats during the integration time

Figure 30. RECEIVER FOR SPREAD SPECTRUM SYSTEM

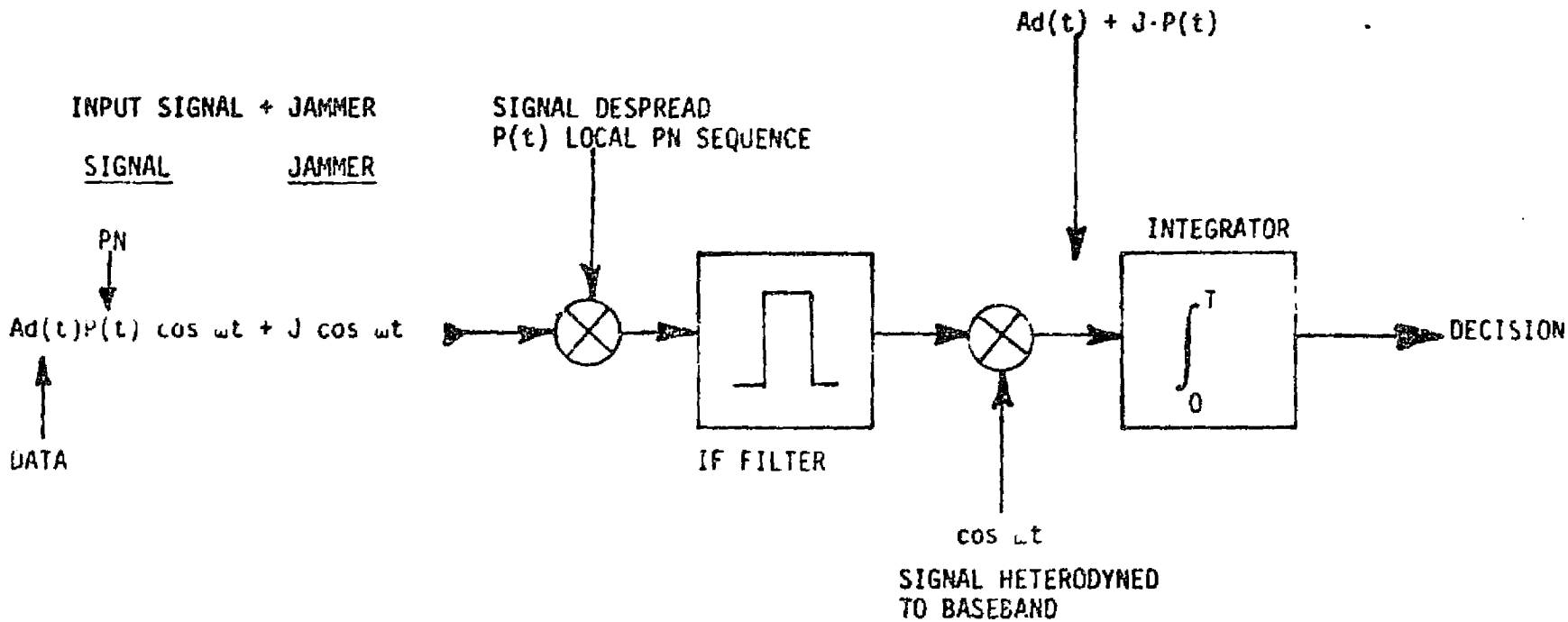

Figure 31. EFFECT OF SPREAD JAMMER ON DEMODULATION

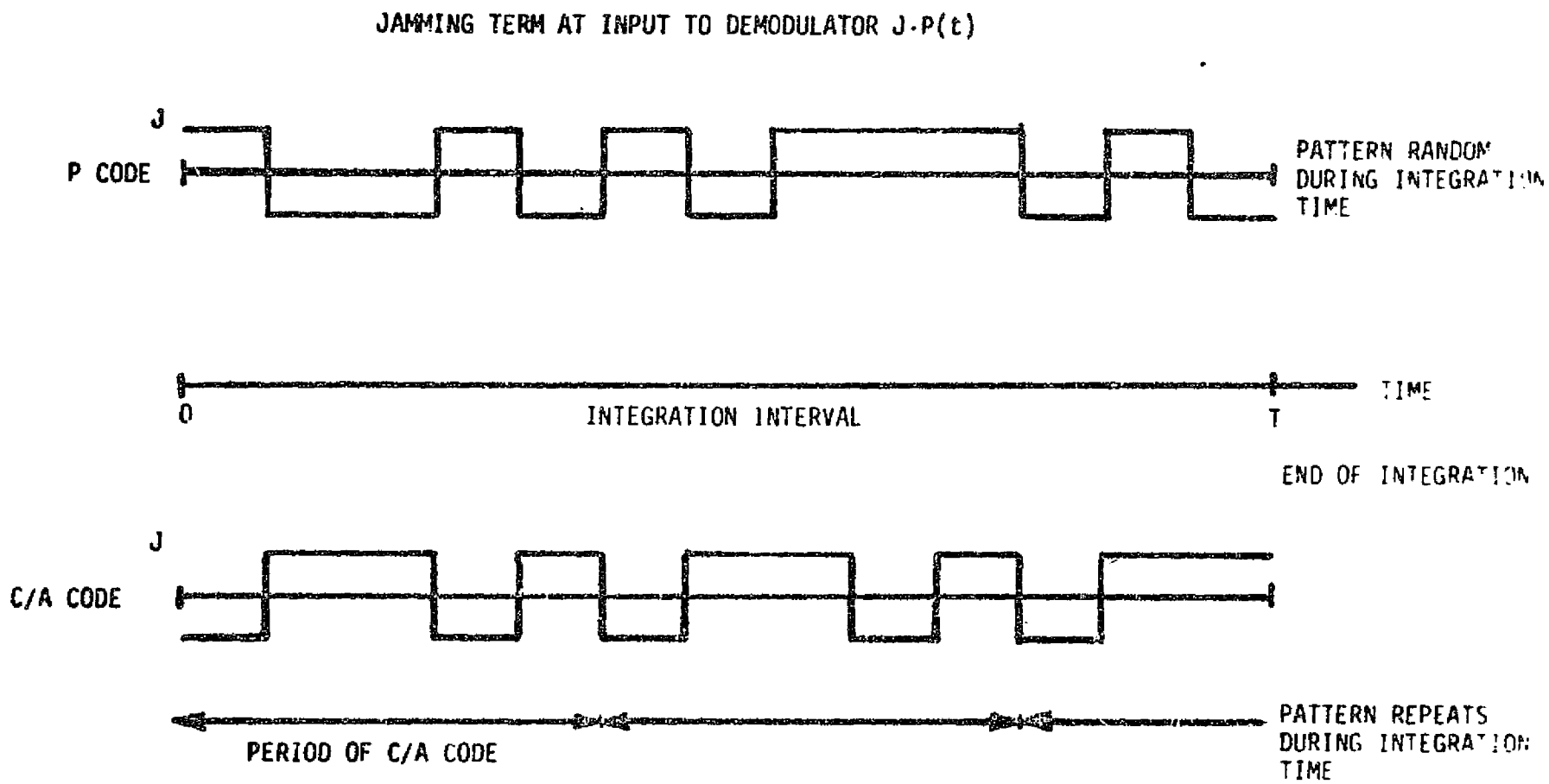

(dB). This is 10 $\log_{10}$ 1/(detector bandwidthxcode period). Thus for the cases where detector bandwidth $\leq$ (code period)$^{-1}$ the jamming margin is J/S (dB) = code bandwidth (dB) - 3 dB - desired E_b/N_0 (dB) + code period (dB). Thus J/S (C/A code) = 60 - 3 - 10 - 30 = 17 dB. This is about 4.5 dB larger than experimental data indicates (S. Lagna/SAMSO). Note that this expression is independent of the detector bandwidth. If the jammer is not a CW tone but is noiselike with a particular bandwidth then the C/A code is in fact 10 dB poorer than the P-code <u>if the jammer bandwidth is in excess of 1 KHz.</u>

8.0 Summary and Conclusions

During the past year LinCom has provided analysis and support in all areas of the Shuttle/GPS receiver study. In particular detailed investigation of available GPS hardware has been performed, particularly the Magnavox receivers. The results of this study has led to the following results:

1. TTFF. The specification of time-to-first-fix has been defined in such a fashion as to minimize cost without sacrificing performance. In particular, acquisition of the C/A code was chosen as the primary method of acquisition. The post-MECO and post-blackout acquisition scenarios were defined. A backup mode using direct-P acquisition was defined. This specification was defined jointly wity E. Schiesser/JSC.
2. Aiding. The area of aiding is a multidisciplined area requiring contributions from both navigation and receiver personnel. At this time it appears that the Shuttle steady state dyanmics are not severe enough to require direct IMU aiding of the receiver VCOs. (At least for the on orbit

and nominal Shuttle CG reentry cases). This direct IMU aiding would only be necessary in order to harden the receivers against jamming. This hardening is done by narrowing loop bandwidths, hence the necessity of IMU aiding in order to keep the signal within the bandwidth. Since there is no jamming requirement , direct IMU aiding is probably not necessary. Some acquisition aiding is required, however, in the form of a state vector. The mundane reacquisition aiding problem (prepositioning) can be done with the GPS R/PA filter.

3. Dynamics: An investigation of the effect of the Shuttle dynamics on GPS receiver performance was performed. These results are primarily directed towards acquisition and tracking. It appears that acquisition cannot be done without the above mentioned state aiding. It also appears that code loop acquisition is possible, even in the presence of the unmodeled acceleration, for a first order loop as long as this loop is aided (internally) by the carrier VCO. Furthermore, of the known transients, the worst case appears to be the RCS start transient. This transient produces nominal range and velocity shifts. A sequential receiver, such as the GPSPAC, may have to open its search aperture during periodic reacquisition in order to account for this transient.

The effect of Shuttle dynamics on AFC and Costas loop acquisition and tracking was also investigated. It was shown

that the C/N_0 available for data demodulation and Doppler measurement may be reduced by about 1.9 dB due to dynamics on the P signal for the GPSPAC. This reduction in C/N_0 is due to changes in Doppler caused by Shuttle acceleration that cannot bé tracked out by the code. This problem does not occur on the C/A signal.

4. Phase Noise. An estimate of the FEI MTU oscillator phase noise spectrum was obtained and the effects of phase noise on receiver performance estimated. It was shown that the phase noise results as negligible reduction in GPS receiver performance.
5. C/A Code Performance. The properties of the C/A code were investigated. It was shown that these short period PN sequences provide little jamming immunity. Maximum theoretical was shown to be 17 dB J/S while experimental evidence indicates jamming margin for the C/A code to be about 12.5 dB.
6. Antenna Management: LinCom activity in this area has been in response to Rockwell requests. Suppose has been in terms of the feasibility of switching the inputs of the two GPSPAC type receivers. It appears that the availability of a matrix type switch as used in the X-set makes any amount of antenna switching possible.

Much of the work during the past year has been directed towards understanding and evaluating the capabilities of the GPSPAC vis-a-vis the Shuttle environment. This particular GPS receiver is intended for use in space vehicles, and consequently is tailored to a high velocity moderate dynamics environment. This is particularly interesting since the extremely large velocities require the

capability of removing very large doppler offsets. The only other GPS receiver capable of handling these offsets is the Texas Instruments MBRS. The GPSPAC is a two channel sequential type of receiver. During the course of this investigation it was found that a two channel receiver adequately satisfies the acquisition requirement. In addition it appears that the presently configured GPSPAC can adequately track from satellites on the C/A code in the presence of both on orbit and entry dynamics. There is some problem with tracking the P-code in the presence of these dynamics although this may be curable with a slight alteration in loop bandwidths.