General Disclaimer

One or more of the Following Statements may affect this Document

- This document has been reproduced from the best copy furnished by the organizational source. It is being released in the interest of making available as much information as possible.

- This document may contain data, which exceeds the sheet parameters. It was furnished in this condition by the organizational source and is the best copy available.

- This document may contain tone-on-tone or color graphs, charts and/or pictures, which have been reproduced in black and white.

- This document is paginated as submitted by the original source.

- Portions of this document are not fully legible due to the historical nature of some of the material. However, it is the best reproduction available from the original submission.

NASA

Technical Memorandum 80295

Directional Spectra of Ocean Waves from Microwave Backscatter: A Physical Optics Solution with Application to the Short-Pulse and Two-Frequency Measurement Techniques

(NASA-TM-80295) DIRECTIONAL SPECTRA OF OCEAN WAVES FROM MICROWAVE BACKSCATTER: A PHYSICAL OPTICS SOLUTION WITH APPLICATION TO THE SHORT-PULSE AND TWO-FREQUENCY MEASUREMENT TECHNIQUES (NASA) 31 p N79-27636

Unclas

G3/43 29955

F. C. Jackson

JUNE 1979

National Aeronautics and
Space Administration

Goddard Space Flight Center
Greenbelt, Maryland 20771

DIRECTIONAL SPECTRA OF OCEAN WAVES FROM MICROWAVE BACKSCATTER: A PHYSICAL OPTICS SOLUTION WITH APPLICATION TO THE SHORT-PULSE AND TWO-FREQUENCY MEASUREMENT TECHNIQUES

Frederick C. Jackson
NASA/Goddard Space Flight Center
Greenbelt, Maryland 20771

ABSTRACT

Two simple microwave radar techniques have been advanced that are potentially capable of providing routine satellite measurements of the directional spectrum of ocean waves. One technique, the "short-pulse" technique, makes use of very short pulses to resolve ocean surface wave contrast features in the range direction; the other technique, the "two-frequency correlation" technique makes use of coherency in the transmitted waveform to detect the large ocean wave contrast modulation as a beat or mixing frequency in the power backscattered at two closely separated microwave frequencies. A frequency-domain analysis of the short-pulse and two-frequency systems shows that the two measurement systems are essentially "duals"; they each operate on the generalized (three-frequency) fourth-order statistical moment of the surface transfer function in different, but symmetrical ways, and they both measure the same directional contrast modulation spectrum. A three-dimensional physical optics solution for the fourth-order moment is obtained for backscatter in the near vertical, specular regime, assuming Gaussian surface statistics. The modulation spectrum is found to be given by the two-dimensional Fourier transform of the product of the joint surface height characteristic function and joint specular surface slope probability density function. Linearization in terms of the surface height and slope covariance functions yields a modulation spectrum that is directly proportional to the large wave directional slope spectrum evaluated in the direction of radar azimuth. A sample calculation with a model one-dimensional surface spectrum is carried out to indicate the extent of harmonic distortion of the slope spectrum due to second-order nonlinear terms. For incidence angles $\theta = 10\text{-}15^\circ$, the distortion is less than 30 percent over the range of roughness conditions of practical interest. In principle, this distortion can be removed by iterative deconvolution.

CONTENTS

ILLUSTRATIONS

DIRECTIONAL SPECTRA OF OCEAN WAVES FROM MICROWAVE BACKSCATTER: A PHYSICAL OPTICS SOLUTION WITH APPLICATION TO THE SHORT-PULSE AND TWO-FREQUENCY MEASUREMENT TECHNIQUES

INTRODUCTION

Two simple microwave radar techniques have been advanced that are potentially capable of providing satellite measurements of the directional spectrum of ocean wind waves on a routine, global basis. These two techniques, the "short-pulse" technique and the "two-frequency correlation" technique are very similar in nature. Both approaches involve the detection of the modulation of backscattered power at oblique incidence angles caused by the modulation of "small scale scatterers" by the large underlying gravity waves.

The small-scale scatterers--depending on the radar beam incidence angle--may be specularly reflecting wave facets, or Bragg-resonant diffraction elements; the modulation mechanism may be purely geometrical, as in the tilting of the small-scale scattered power pattern by the slopes of the large waves, or the modulation mechanism may be hydrodynamic in nature, involving the modification of the small-scale waves by the atmospheric and large ocean wave flow fields (Alpers and Hasselmann, 1978). In the short-pulse technique, very short, wide-band pulses are used to resolve the contrast modulation in range; the modulation spectrum is obtained simply by analog spectrum analysis of the envelope-detected backscattered signal. The two-frequency technique makes use of coherency in the transmitted waveform; the large-wave contrast modulation is detected in the beat, or mixing frequency, of backscattered power at two closely separated microwave frequencies. The short-pulse approach to a possible satellite ocean wave sensor was first suggested in a note by Tomiyasu (1971). The two-frequency approach, first proposed by Ruck, et al., (1972), has been extensively analyzed by Alpers and Hasselmann (1978) who found it to be a feasible technique for aircraft and satellite implementation. Unfortunately no such similar analysis of the short-pulse technique exists in the literature, and as yet no "trade-off" analysis of the two techniques has been made, although a beginning was made by Jackson (1974b).

As shown by Jackson (1974b), and as will be shown in the present work, the two techniques measure the same thing: namely, the directional contrast modulation spectrum of the large-scale ocean waves in the direction of radar azimuth. High directional resolution is achieved through the lateral averaging of wave contrast features across the antenna beam spot on the surface, a distance which might be on the order of 10km for a satellite radar system. The effect of this lateral averaging, when combined with spectrum analysis of the returned signal, is easily seen to be that of a two-dimensional spectral analysis for contrast waves propagating in (or contrary to) the direction of radar look. In a nutshell, only those plane Fourier contrast waves that are travelling in the direction of radar look can survive the lateral averaging (Fig. 1b).

Two important developments have enhanced the potential for space application of the two "directional wave spectrometers." The first development (Jackson, 1974) was the realization that the modulation signal spectrum to the residual background, random clutter* noise ratio (SNR, for short) could be greatly improved in the two-frequency system by using wide-band coherent waveforms as opposed to the quasi-monochromatic waveforms originally figured in this technique. The second important development (Alpers and Hasselmann, 1978) was to show how Doppler filtering could be used on fast-moving platforms, also, to substantially increase the measurement SNR.

In the present work, we will touch only briefly on general system considerations (e.g., a rough analysis of the measurement SNR for the two techniques is carried out in the last section of the paper). The primary aim of this paper is to present a solution for the directional modulation spectrum in the restricted case of near-vertical incidence ($\theta \lesssim 10\text{-}20^\circ$), i.e., in the case of quasi-specular backscatter. Apart from the important limitation inherent in an assumption of Gaussian surface statistics, the physical optics solution presented is felt to be a rather realistic solution to the problem. The reason for putting faith in the solution is that in the specular sea backscatter

*The expression "Rayleigh clutter" is used for the random, fluctuating part of the backscattered signal that arises solely as a consequence of waveform coherency. The superposition of monochromatic waves scattered from a larger number of independent scattering elements randomly distributed in range results in Gaussian statistics for the field (Central Limit Theorem) and classical Rayleigh statistics for the envelope. In analogy with the conventional use of the word "clutter" for sea-echo interference with hard target detection, we use the word for the random fluctuations that interfere with the measurement of the modulation on the sea echo signal itself.

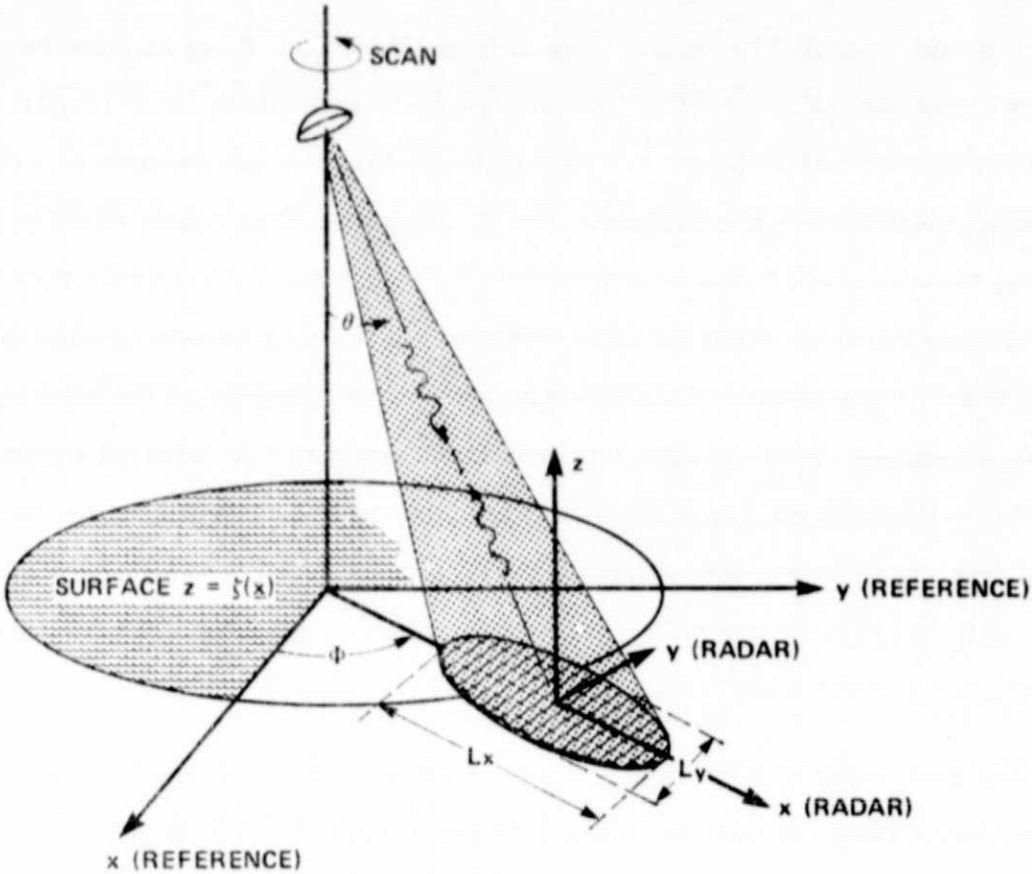

Figure 1a. Overall Geometry and Coordinate Definition

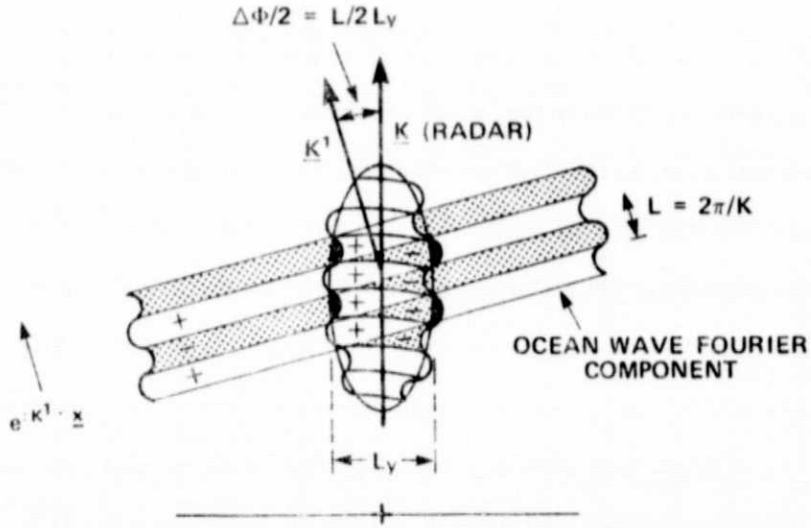

Figure 1b. Illustrating Directional Resolving Power (In the Case Where Wave-front Curvature Is Not the Limiting Factor)

regime, the sensitivity of the return to very small scale waves (e.g., capillary waves for 2-3 cm radars) is small compared to the sensitivity to these waves in the Bragg resonant diffraction regime at larger incidence angles ($\theta > 30°$), where the sensitivity is essentially 100% (Wright, 1968). In the quasi-specular backscatter regime (Barrick, 1974), the entire sea spectrum up to the small diffraction-limited wavelets is contributing to the population of specularly reflecting facets, and there is, therefore, some reason to suppose that the small scale waves—whose statistics via-a-vis the large wave profile are presently virtually unknown—will not enter into the problem in a too-critical way. The successful prediction of the average radar impulse response of the sea at vertical incidence by Jackson (1979) supports this supposition: in that work, assuming a geometrical optics model of scattering it was found that the (3 cm) data could be explained by the non-Gaussian statistics of the entire free gravity-wave ensemble without special consideration of the small waves. Thus, in the solution we present here (a physical optics solution in the high-frequency limit), it is probably the Gaussian assumption for the large wave field that is the weak point.

The above is not to say that larger incidence angles are to be avoided; the point is that theory for the hydrodynamic interactions that are the primary agents of the modulation at large angles is on very weak foundations (Wright, et al., 1978). A reliable model for large-angle backscatter would have to be constructed on the basis of empirical modulation functions; presently there are insufficient data to define these functions (or functionals) over a range of sea states.

In the following section we present a straightforward frequency domain analysis of the short-pulse and two-frequency systems that allows for arbitrary transmitted waveforms. The two systems can be viewed as alternative systems for detecting a modulation on noisy backscattered signals, a viewpoint inspired by the work of Parzen and Shiren (1956). It is shown that each system operates on the generalized three-frequency fourth-order statistical moment of the surface scattering transfer function, $M(k, \kappa, \Delta k)$, in different but symmertical ways. $M(k, \kappa, \Delta k)$ is calculated according to physical optics in three-dimensions, in the plane wave approximation, assuming a Gaussian sea. It is shown that $M(k, \kappa, \Delta k) = M_1(\kappa, \kappa) + M_1(k, \Delta k)$, and that the short-pulse system modulation spectrum is the non-DC part of $M_1(k, \kappa)$, and similarly for the two-frequency system with $\kappa \rightarrow \Delta k$. In the limit $k \rightarrow \infty$, $M(\kappa)$ has the form of the two-dimensional Fourier

transform of the product of the joint surface height characteristic function and the joint specular surface slope probability density function. Linearization of the integral M_1 in terms of the height and slope covariance functions results in direct proportionality of M_1 to the directional large wave slope spectrum (a result anticipated). Harmonic distortion or smearing of the slope spectrum due to nonlinearity in M_1 can be accounted for accurately, and in principle rectified by an iterative deconvolution procedure, using the second-order expansion of M_1. A sample (two-dimensional) calculation with a model wave spectrum is given to indicate the possible extent of harmonic distortion. For angles $10° \leq \theta \leq 15°$, the distortion is $< 30\%$ provided a reasonably sufficient amount of roughness (i.e., total radar-effective rms surface slope). A brief analysis of the measurement signal-to-noise is carried out in the last section of the paper, an analysis which includes the Doppler filtering concept of Alpers and Hasselmann (1978). The analysis indicates the feasibility of satellite measurements of directional wave spectra by either short-pulse or two-frequency techniques.

SHORT-PULSE AND TWO-FREQUENCY TECHNIQUES: THE GENERALIZED FOURTH ORDER MOMENT $M(k, \kappa, \Delta k)$

We consider the backscatter of an arbitrary (finite-energy) incident electric field waveform $E_0(t)$ whose Fourier transform is $E_0(k)$ where $k = \nu/c$ is the propagation constant, ν and c being the radian frequency and speed of light respectively. $E_0(k)$ is understood to be evaluated at the beam spot center $\underline{x} = (x, y) = (0, 0)$ on the mean surface $z = 0$. The surface transfer function for backscatter, $S(k)$, is the ratio of the backscattered field harmonic component $E_s(k)$ to the incident field harmonic component, viz.

$$S(k) = \frac{E_s(k)}{E_0(k)} \tag{1}$$

where the same holds in terms of frequency, $\nu = kc$. In principle, $S(k)$ is obtained as the solution to the complex boundary value problem for a unit amplitude incident monochromatic wave. If the scattering surface $z = \zeta(\underline{x})$ is assumed to be homogeneous random process in the horizontal coordinate $\underline{x}$, then $S(k)$ is a complex random variable (approximately Gaussian, if the illuminated area is large compared to the scale of the spatial surface correlation, namely, the dominant ocean

wavelength) that obtains for any realization of $\zeta(\underline{x})$. (In this work, we will not model the "slow-time," Doppler evolution of S(k); but we will consider this aspect of the problem when we discuss the measurement SNR problem.)

The short pulse detection system, diagrammed in Figure 2a, consists of a square-law envelope detector and a spectrum analyzer. The ensemble average output of the spectrum analyzer can be written as:

$$\langle Q(\omega_i)\rangle = (2\pi)^3 \int |H_i(\omega)|^2 \langle |P(\omega)|^2\rangle \, d\omega$$

where H_i is the i-th bandpass filter function and where

$$\langle |P(\omega)|^2\rangle = \iint \langle S(\nu)S^*(\nu-\omega)S^*(\nu')S(\nu'-\omega)\rangle \cdot E_o(\nu)E_o^*(\nu-\omega)E_o^*(\nu')E_o(\nu'-\omega)d\nu d\nu'.$$

The two-frequency detection system, diagrammed in Figure 2b, is a wide-band version of the original narrow-band (monochromatic) system first proposed by Ruck et al., (1972) and considered by Alpers and Hasselmann (1978). It consists of a two channel receiver and a cross-correlator. H_1 and H_2 are bandpass filters with center frequencies ν_1 and ν_2 separated by the modulation frequency $\Delta\nu_{12} = \nu_1 - \nu_2$. The K-filters are high-pass, DC-blocking filters. The ensemble average output of the correlator can be written as

$$\langle Q_{12}\rangle = (2\pi)^3 \int K_1 K_2^* \langle P_1 P_2^*\rangle \, d\omega$$

$$\langle P_1 P_2^*\rangle = (2\pi)^4 \iint \langle S(\nu)S^*(\nu-\omega)S^*(\nu')S(\nu'-\omega)\rangle \cdot H_1(\nu)H_1^*(\nu-\omega)H_2^*(\nu')H_2(\nu'-\omega) \quad (3)$$

$$\cdot\ E_o(\nu)E_o^*(\nu-\omega)E_o^*(\nu')E_o(\nu'-\omega)\, d\nu d\nu'.$$

The generalized fourth-order moment of the transfer function that both systems operate upon will be denoted by

$$M(k, \kappa, \Delta k) \equiv \langle S(k)S^*(k-\kappa)S^*(k')S(k'-\kappa)\rangle \quad (4)$$

where again we are using wavenumber k and frequency ν interchangeably. The difference or mixing wave number is defined by

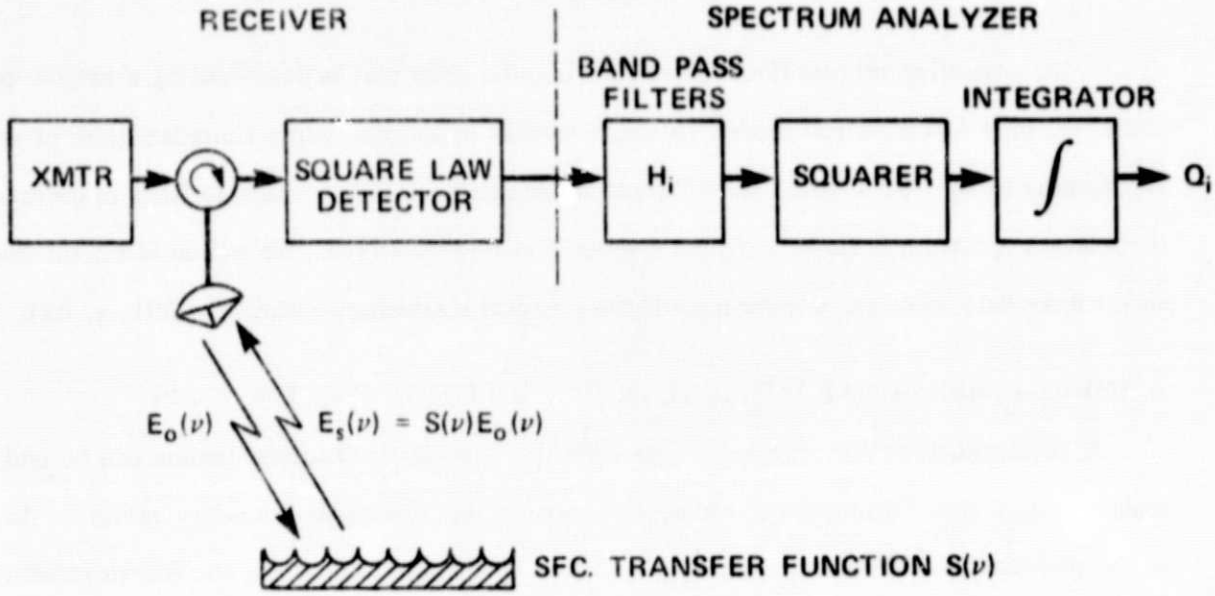

Figure 2a. Short-Pulse System Diagram

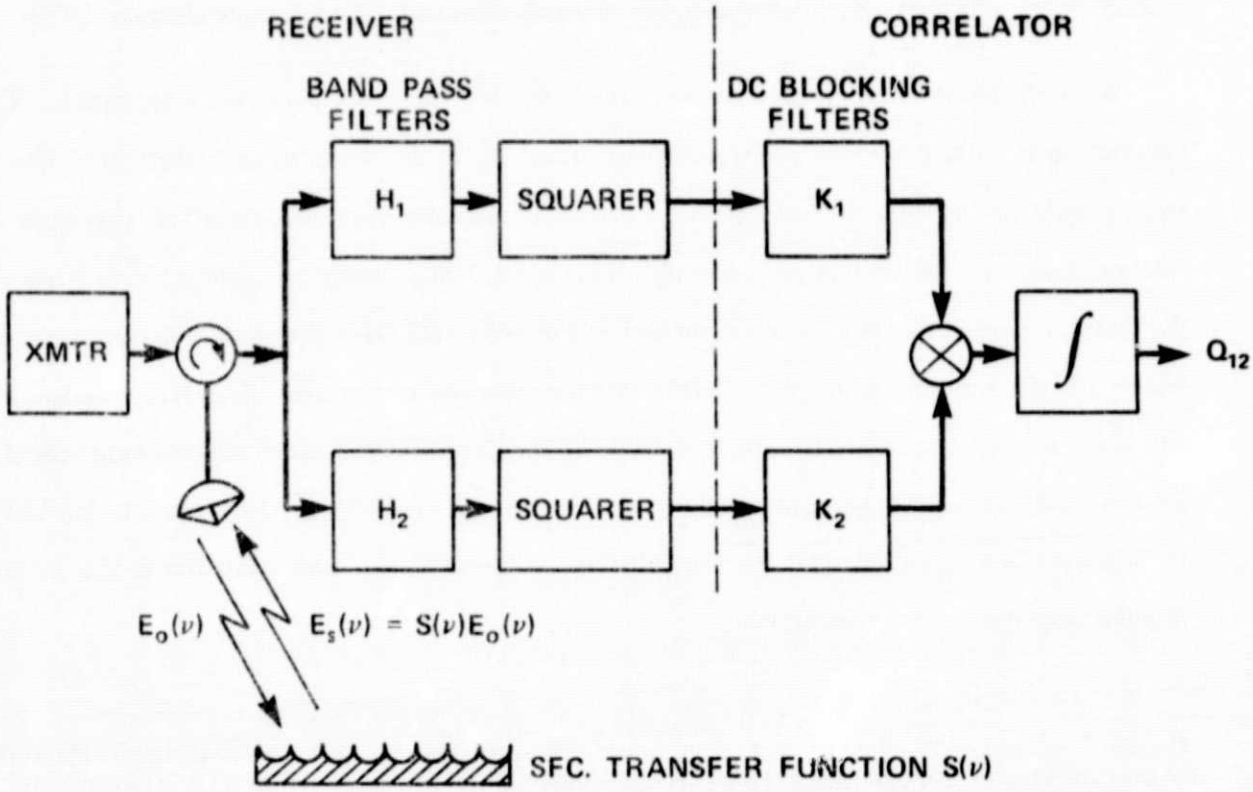

Figure 2b. Two-Frequency System Diagram

$$\Delta k = k - k'$$

If the scattering process (i.e., the surface impulse response) is described by a simple, physically plausible mathematical model, to wit, a weakly modulated white Gaussian noise process, the functioning of the two systems for different transmitted waveform characteristics in detecting the modulation spectrum is easily analyzed (Parzen and Shiren, 1956). We will hold off on this analysis until we have obtained a more meaningful physical scattering solution for $M(k, \kappa, \Delta k)$.

A THREE-DIMENSIONAL PHYSICAL OPTICS SOLUTION FOR $M(k, \kappa, \Delta k)$

A good solution* for $S(k)$ in the near-vertical, specular backscatter regime can be had with scalar physical optics using the so-called Kirchhoff or tangent plane boundary values of the field in the physical optics integral. The approach that we take in computing the fourth-order moment parallels the approach of Beckmann and Spizzichino (1963) to computing the second-order moment $\langle |S(k)|^2 \rangle$. That is, we will go to the high frequency limit $k \to \infty$ after interchanging expectation and integral operations. The alternative approach is to make the stationary phase approximation to the physical optics integral before ensemble averaging (see, e.g., Weissman, 1974).

We work under the simplifying assumptions of: (a) Far zone, plane wave scattering. This assumption is good if we stay away from vertical incidence and keep to high altitudes: The phase front should be flat over the height extent of the surface and over the azimuthal large-wave correlation distance. (b) Perfect conductivity. This is a trivial simplifying assumption (a Fresnel reflectivity at normal incidence can be applied at the end). (c) Deep phase modulation, $k\sigma >> 1$ where σ is the rms surface height. This is entirely valid for microwaves of 2–3 cm wavelength in any sea state. (d) Moderate bandwidths. A high bandwidth in the short pulse system would be 1% (i.e., 2 cm/2m). (e) Gaussian surface statistics. This is probably a poor assumption. The work of Jackson (1978) demonstrates the importance of the non-linear wave statistics in the average impulse response in the near-vertical.

*Exactly how good is this solution? A concrete, quantitative answer should be possible by working on the work of Axline and Fung (1978) (numerical, Monte-Carlo solutions of integral equations); Brown (1978) (composite, large and small scale surface method); and Jackson (1974a) (high-frequency, parabolic correction to the Kirchhoff tangent plane boundary values in the Stratton-Chu integral).

Let $z = \zeta(\underline{x})$ describe the random surface. Following Weissman (1974), we write the physical optics integral, as

$$S(k) = C_k \int G(\underline{x})\, e^{i2k\cos\theta\,\zeta(\underline{x})} e^{-i2k\sin\theta x} d\underline{x} \tag{5}$$

where x, z form the plane of incidence

θ is the angle of incidence

$\underline{x} = (x, y)$ and $d\underline{x} = dxdy$

$C_k = \pm ik(2\pi R\cos\theta)^{-1}\exp(ikR)$ where R is the range to the beam spot center, $\underline{x} = \underline{0}$

$G(\underline{x})$ = antenna power pattern, one way, $G(\underline{0}) = 1$.

Assuming interchangeability of expectation and integration operations, the fourth order moment (4) can be written as the four-fold integral.

$$M \sim |C_k|^4 \iiiint G_1 \ldots G_4 \langle e^{i2\cos\theta\,\vec{k}\cdot\vec{\zeta}}\rangle e^{i2\sin\theta\,\vec{k}\cdot\vec{x}} d\underline{x}_1 \ldots d\underline{x}_4 \tag{6}$$

In this, we use the short hand notation

$$\vec{x} \equiv (x_i) = (x_1, x_2, x_3, x_4)$$
$$\vec{k} \equiv (k_i) = (k, -k+\kappa, -k', k'-\kappa)$$
$$\vec{\zeta} \equiv (\zeta_i) = (\zeta(\underline{x}_1), \zeta(\underline{x}_2), \zeta(\underline{x}_3), \zeta(\underline{x}_4))$$

The approximation to the product of the C_k's, $|C_k|^4$ follows from the moderate bandwidth assumption, (d). The dot notation is the conventional vector inner product.

The expectation

$$\phi(2\cos\theta\,\vec{k}) = \langle e^{i2\cos\theta\,\vec{k}\cdot\vec{\zeta}}\rangle$$

is the characteristic function of the random four-vector of surface heights $\vec{\zeta}$. If $\vec{\zeta}$ normally distributed with zero mean, then (Fisz, 1963) ϕ has the form

$$\phi(2\cos\theta\,\vec{k}) = \exp(-2\cos^2\theta \sum R_{ij}k_ik_j) \tag{7}$$

where the covariance matrix

$$R_{ij} = \langle \zeta_i \zeta_j \rangle \equiv R(\underline{x}_i - \underline{x}_j) \tag{8}$$

is a symmetric matrix and a symmetric function in each of the lag vectors $\underline{x}_i - \underline{x}_j$. At zero lag

$$R_{ij}(\underline{0}) = \langle \zeta^2 \rangle \equiv \sigma^2 \tag{9}$$

where σ is the rms height of the surface. Let

$$\begin{aligned} \underline{u} &\equiv (u_x, u_y) = \underline{x}_2 - \underline{x}_1 \\ \underline{v} &\equiv (v_x, v_y) = \underline{x}_3 - \underline{x}_4 \\ \underline{w} &\equiv (w_x, w_y) = \underline{x}_4 - \underline{x}_2 \end{aligned} \tag{10}$$

and

$$d\underline{u} = d\underline{x}_2, \quad d\underline{v} = d\underline{x}_3, \quad d\underline{w} = d\underline{x}_4$$

Then transforming (6) from space variables to the lag variables, $\underline{u}$, $\underline{v}$, and $\underline{w}$ we have

$$\begin{aligned} M = |C_k|^4 \iiiint & G(\underline{x}_1) G(\underline{u} + \underline{x}_1) G(\underline{u} + \underline{v} + \underline{x}_1)\ G(\underline{u} + \underline{w} + \underline{x}_1) \\ \times\ \phi(2\cos\theta \vec{k}) \exp & \left\{ -i\sin\theta\, [k(u_x + v_x) - \Delta k v_x + \kappa w_x] \right\} d\underline{u}\, d\underline{v}\, d\underline{w}\, d\underline{x}_1 \end{aligned} \tag{11}$$

Expanding the quadratic form $\sum R_{ij} k_i k_j$ in ϕ and expressing the various lags in terms of $\underline{u}$, $\underline{v}$, and $\underline{w}$, we have

$$\begin{aligned} \phi = \exp\Big(-4\cos^2\theta \Big\{ & k^2 [2\sigma^2 - R(\underline{u}) - R(\underline{v}) - R(\underline{u} + \underline{v} + \underline{w}) + R(\underline{u} + \underline{w}) \\ & + R(\underline{v} + \underline{w}) - R(\underline{w})] - k\Delta k [2\sigma^2 - 2R(\underline{v}) \\ & - R(\underline{u} + \underline{v} + \underline{w}) + R(\underline{u} + \underline{w}) + R(\underline{v} + \underline{w}) - R(\underline{w})] \\ & - k\kappa [2\sigma^2 - R(\underline{u}) - R(\underline{v}) + R(\underline{u} + \underline{w}) + R(\underline{v} + \underline{w}) - 2R(\underline{w})] \\ & + \kappa\Delta k [\sigma^2 - R(\underline{v}) + R(\underline{v} + \underline{w}) - R(\underline{w})] \\ & + (\Delta k)^2 [\sigma^2 - R(\underline{v})] + \kappa^2 [\sigma^2 - R(\underline{w})] \Big\} \Big). \end{aligned} \tag{12}$$

On account of the moderate bandwidth assumption the leading term in the carrier wavenumber k dominates the behavior of the integral. Because of the deep phase modulation, $k\sigma \gg 1$, ϕ is concentrated along two hyperlines in $\underline{u}$, $\underline{v}$, $\underline{w}$ hyperspace where the factor of k^2 is identically zero. From (12) it is seen that these lines are

$$\begin{aligned} &\ell 1. \quad \underline{u} = \underline{v} = \underline{0} \ (\underline{w} \text{ axis}) \\ &\ell 2. \quad \underline{u} = -\underline{v}, \ \underline{w} = \underline{0} \end{aligned} \tag{13}$$

The thickness of the line masses, the e-folding coherency distance, is (e.g., on $\ell 1$)

$$|u_c| = |v_c| \sim (2k\cos\theta\, \sigma_s)^{-1}$$

where σ_s is the rms surface slope. Because ϕ is concentrated about the two lines, we can decompose M into two separate integrals, M_1 and M_2, about the small volumes surrounding $\ell 1$ and $\ell 2$. In each integral, the neighborhood of the origin, where the two line masses merge, will have to be excluded. Consider the integration about $\ell 1$, the $\underline{w}$ axis. Because of the dominance of the k^2 term, the cross-terms in $k\kappa$, etc., and the $(\Delta k)^2$ term are negligible in the $\underline{u}$, $\underline{v}$ integration; only the κ^2 term that depends only on $\underline{w}$ will be important. Now, we can treat the problem in two ways at this point: we can allow for diffraction by the small-wave structure by assuming a composite surface consisting of two independent sets of smaller (diffracting) waves and larger (reflecting) waves. Analysis can then proceed by expanding ϕ to first order in the small wave covariance function in the manner of Jackson (1974). The analysis, similar to that employed by Ruck, et al., (1972) is complicated enough in two dimensions and it will be worse in three. To keep the three-dimensional analysis simple enough we will sacrifice what physical optics has to tell about the diffracted fields; accordingly we will stay strictly in the specular backscatter regime where specular retro-reflection is the <u>dominant</u> mode of backscatter. (cf. Barrick, 1974; Brown, 1978) Thus, we will ignore the small structure and assume that the covariance function is well-behaved near the origin, i.e., that the surface is smooth on the order of a few wavelengths. Then the usual high frequency approximation can be made by representing the height covariance function R by its second-order Taylor series expansion about the origin (or about <u>any</u> lag $\underline{w}$).

Referring to (12), consider the $\ell 1$ integration over $\underline{u}$ and $\underline{v}$. On expanding the k^2 term in $\underline{u}$ and $\underline{v}$ about a fixed $\underline{w} \neq 0$ to second order, there results the quadratic form,

$$-\frac{1}{2}\sum m_{ij}(\underline{w})t_i t_j \tag{14}$$

where the characteristic vector

$$\vec{t} \equiv (t_i) = 2k\cos\theta(u_x, u_y, v_x, v_y) \tag{15}$$

and the covariance matrix m_{ij} of the surface slopes,

$$m_{ij}(\underline{w}) = \left[\begin{array}{cc|cc} \sigma_x^2 & \sigma_{xy}^2 & -R_{xx}(\underline{w}) & -R_{xy}(\underline{w}) \\ \sigma_{xy}^2 & \sigma_y^2 & -R_{xy}(\underline{w}) & -R_{yy}(\underline{w}) \\ \hline \multicolumn{2}{c|}{\underline{\underline{\text{symmetric}}}} & \sigma_x^2 & \sigma_{xy}^2 \\ & & \sigma_{xy}^2 & \sigma_y^2 \end{array}\right] \tag{16}$$

where subscripts stand for partial differentiation, and

$$-R_{xx}(\underline{w}) \equiv \langle \zeta_x(\underline{0})\zeta_x(\underline{w})\rangle \tag{17}$$

is the x-slope component covariance function, and similarly for xy and yy. The slope variances (understood to be the radar-effective, diffraction limited slope variances, i.e., having values less than the true high-frequency, optical values),

$$\sigma_x^2 \equiv -R_{xx}(\underline{0}) \equiv \langle \zeta_x^2 \rangle \tag{18}$$

With the κ^2 term in $\underline{w}$ that survives in the $\underline{u}$, $\underline{v}$ integration about $\ell 1$ we then have for ϕ

$$\phi = e^{-\frac{1}{2}\Sigma m_{ij}t_i t_j} \cdot e^{-4\cos^2\theta\kappa^2[\sigma^2 - R(\underline{w})]} \tag{19}$$

Now, since the coherency distances in $\underline{u}$ and $\underline{v}$ are small compared to the extent of illumination we can set $\underline{u} = \underline{v} = \underline{0}$ in the gain pattern: thus, $G_1 \ldots G_4 \sim G^2(\underline{x}_1)G^2(\underline{x}_1 + \underline{w})$. Also, in the phasor in (11) we can set $\Delta k = 0$ since by the moderate bandwidth assumption the phase difference $\Delta k|v_x|_c \ll 1$. Thus, if we define the joint specular slope vector

$$\vec{s} = \tan\theta(1, 0, 1, 0) \tag{20}$$

we can write the phasor as $\exp(-i\vec{t}\cdot\vec{s})\exp(-i2\sin\theta\kappa w_x)$. From the above, if we now integrate over the remaining space variable $\underline{x}_1$ (which only appears in the gain function, and if we change from $\underline{u}$, $\underline{v}$ variables to the $\vec{t}$ variables we have for the integration over $\ell 1$:

$$M_1(\kappa) = \frac{Ae}{(4R^2\cos^4\theta)^2} \oint_{-\infty}^{\infty} \hat{G}(\underline{w}) e^{-4\cos^2\theta\kappa^2[\sigma^2 - R(\underline{w})]}$$

$$\cdot \left\{ (2\pi)^{-4} \iiiint_{-\infty}^{\infty} e^{-\frac{1}{2}\Sigma m_{ij} t_i t_j} e^{-i\vec{t}\cdot\vec{s}} dt_1 \ldots dt_4 \right\} e^{-i2\sin\theta\kappa w_x} d\underline{w} \tag{21}$$

where

$$\hat{G}(\underline{w}) = \frac{1}{A_e} \int_{-\infty}^{\infty} G^2(\underline{x}_1) G^2(\underline{x}_1 + \underline{w}) d\underline{x}_1 \tag{22}$$

and $A_e \equiv \int_{-\infty}^{\infty} G^4(\underline{x}_1) d\underline{x}_1$

Note that the k-dependence of M has disappeared in the high frequency $k \to \infty$ approximation. The sign $\oint$ means that a region about the origin must be excluded in the integration (i.e., where $\ell 1$ and $\ell 2$ come together). We recognize that $\exp(-\frac{1}{2}\sum m_{ij} t_i t_j)$ is characteristic function of the jointly, normally distributed slope vector $\vec{\xi} = (\xi_{x_1}, \xi_{y_1}, \xi_{x_2}, \xi_{y_2})$ at two points 1 and 2 separated by the lag $\underline{w}$. The term in braces, the Fourier transform of the characteristic function evaluated at the joint specular slope condition $\vec{\xi} = \vec{s}$ is the joint probability density function (pdf) of $\vec{\xi}$ evaluated at $\vec{s}_1$ viz. (Fisz, 1963, p. 160)

$$p(\vec{s};\underline{w}) = \frac{1}{(2\pi)^2\sqrt{\det m_{ij}}} e^{-\frac{1}{2} m_{ij}^{-1} s_i s_j} \tag{23}$$

where m_{ij}^{-1} is the inverse to the covariance matrix m_{ij} given by (16).

Equation (21) is written in the radar system coordinates with the x-axis lying in the plane of incidence. Define a new set of x, y coordinates such that the radar can assume any azimuth

Φ relative to the new reference x-axis (Fig. 1). In this coordinate system, the surface modulation wavenumber $2\kappa\sin\theta$ becomes the vector modulation wavenumber,

$$\underline{K} = 2\kappa\sin\theta(\cos\Phi, \sin\Phi); \quad K \equiv |\underline{K}| \tag{24}$$

and the specular slope vector $\vec{s}$ becomes

$$\vec{s} = \tan\theta(\cos\Phi, \sin\Phi, \cos\Phi, \sin\Phi) \tag{25}$$

Since the pdf (23) is invariant with respect to the orientation of the reference coordinate axes (21) becomes in terms of $\underline{K}$

$$M_1(\underline{K}) = \frac{A_e \sec^8\theta}{16R^4} \mathcal{F}\!\!\int_{-\infty}^{\infty} \hat{G}(\underline{w})\, e^{-K^2\cot^2\theta[\sigma^2 - R(\underline{w})]} \cdot p(\vec{s};\underline{w}) e^{-i\underline{K}\cdot\underline{w}} d\underline{w} \tag{26}$$

where now $\underline{w} = (w_x, w_y)$ is the lag vector in the fixed surface x, y coordinates.

Thus far, we have obtained, in the high frequency limit, the contribution M_1 to the moment M from $\ell 1$. Since $M(k, \kappa, \Delta k)$ is symmetric with respect to a κ and Δk interchange, and since M_1 is independent of Δk, and since $M_1(\Delta k) \neq M_1(\kappa)$ for arbitrary $\Delta k \neq \kappa$ it follows that the contribution M_2 from $\ell 2$, $M_2 = M_1(k, \Delta k)$. Thus, the total moment M is given by (in the high frequency limit):

$$M(k, \kappa, \Delta k) = M_1(\kappa) + M_1(\Delta k) \tag{27}$$

SECOND-ORDER EXPANSION OF M_1

If $\kappa\sigma\cot\theta$ is not too large, the joint surface height characteristic function can be expanded in its argument, accurately, to second-order in the height covariance function $R(\underline{w})$. The relevant parameter in this expansion is the significant wave slope,

$$\delta_o \equiv H_s/L_o = (2/\pi)K_o\sigma \tag{28}$$

where $H_s = 4\sigma$ is the significant wave height and L_o is the wavelength of the dominant wave corresponding to the wavenumber K_o of the peak of the wave spectrum. In equilibrium sea conditions, $\delta_o \sim 1/20 = 5\%$; in strongly wind-driven developing seas the wave steepness may be as high as 10% (Kinsman, 1965). If we define the non-dimensional wavenumber $\hat{K} = K/K_o$, then

$$\delta \equiv K\sigma\cot\theta = (\pi/2)\delta_o\hat{K}\cot\theta \tag{29}$$

With values, $\delta_o = 0.05$, $\theta = 15°$ and $K \leq 3$, then $\delta \leq 0.88$ and the error in the second-order expansion will be less than 3 percent.

If the large-wave steepness δ_o is small compared to the total radar-effective rms slops σ_s, then the off-diagonal blocks of the slope covariance matrix $m_{ij}(\underline{w})$ for lags $\underline{w}$ away from the origin will be small compared to the diagonal blocks of m_{ij}. Then provided we are not too far into the wings of the slope distribution, i.e., provided that $\tan\theta/\sigma_s$ is not too large, we can expand $p(\vec{s};w)$ about its value at infinite lag, where the slope correlations vanish, i.e., we can expand about the value

$$p(\vec{s};\infty) \equiv p_1^2(\vec{s}_1) \tag{30}$$

where the specular slope $\vec{s}_1 \equiv \tan\theta(\cos\Phi, \sin\Phi)$ and p_1 is the (Gaussian) slope pdf (Cox and Munk, 1954). The relevant parameter in the expansion of p is

$$\epsilon = \frac{\tan\theta}{\sigma_s}\,\delta_o \tag{31}$$

A crude fitting of the geometrical optics backscatter cross-section,

$$\sigma^o = \pi\sec^4\theta\, p_1(\vec{s}_1) \tag{32}$$

to the 2cm data of Jones, et al., (1977) gives the following estimate of the radar-effective rms slope at 2cm as a function of wind speed, W:

$$\sigma_s^2 \sim 0.0025\,W[ms^{-1}] + 0.01 \tag{33}$$

This 2cm radar-effective slope variance is approximately 60% of the total, or optical, slope variance of Cox and Munk (1954) over the wind speed range 10–25 ms^{-1}. This is in perfect agreement with slope variances inferred from passive radiometric data (Wilheit, 1979). With values, $\delta_o = 0.05$, $\theta = 15°$, and $W \geq 5\,ms^{-1}$, then $\epsilon \leq 0.16$

For typical nadir angles and sea conditions the parameters δ and ϵ are small enough that a linear approximation to M_1 should be fairly accurate, and that a second-order approximation to

M_1 should be very accurate. To facilitate the expansion of M_1 we will assume that the x and y reference axes coincide with the symmetry axes of $p_1(\vec{s}_1)$. Then, if

$$\alpha = \frac{\tan\theta}{\sigma_x}\cos\Phi \equiv \alpha_o\cos\Phi$$
$$\beta = \frac{\tan\theta}{\sigma_y}\sin\Phi \equiv \beta_o\sin\Phi \tag{34}$$

$p_1(\vec{s})$ becomes simply

$$p_1 = p_1(\alpha,\beta) = \frac{1}{2\pi\sigma_x\sigma_y}\, e^{-\frac{1}{2}(\alpha^2+\beta^2)} \tag{35}$$

Denote the waveheight directional spectrum $F(\underline{K}) \equiv F(K,\Phi)$,

$$F(\underline{K}) = (2\pi)^{-1}\int R(\underline{w})e^{-i\underline{K}\cdot\underline{w}}\,d\underline{w} \tag{36}$$

The surface height variance σ^2 is the area under $F(\underline{K})$,

$$\sigma^2 = \int_0^{2\pi}\int_0^{\infty} F(K,\Phi)K\,dK\,d\Phi \tag{37}$$

The directional slope spectrum $K^2F(\underline{K})$ is the contribution to the total slope variance σ_s^2 from component waves travelling in various directions.

$$\sigma_s^2 = \int_0^{2\pi}\int_0^{\infty} K^2F(K,\Phi)K\,dK\,d\Phi \tag{38}$$

$K^2F(\underline{K})$ is simply the Fourier Transform of the slope covariance function in the direction of analysis, i.e., in the direction of the component wave. Thus if the x-axis is again the <u>radar</u> x-axis lying at an azimuth relative to the fixed x-axis, we have

$$K^2F(\underline{K},\Phi) = (2\pi)^{-1}\int -R_{xx}(w_x)e^{-iKw_x}\,d\underline{w} \tag{39}$$

In the expansion of M_1 to second order in the covariance functions and the consequent Fourier transformation in the surface reference coordinates we encounter such as

$$\int R_{xx}e^{-i\underline{K}\cdot\underline{w}}\,d\underline{w} \equiv -(2\pi)^2\cos^2\Phi K^2F(\underline{K})$$

which follows from the definition (36); the second order terms will result in various convolutions of the directional spectrum such as

$$\int RR_{xx} e^{-i\underline{K}\cdot\underline{w}}\, d\underline{w} \equiv -(2\pi)^2 \overline{F(\underline{K})} * \overline{K_x^2 F(\underline{K})} \tag{39}$$

where $*$ denotes the two-dimensional convolution and the overbar notation will be used to denote groups of variables involved in the convolution operation.

One last simplification will be made in the expansion of M_1: we let the antenna beam in both range and azimuth dimensions be broad compared to the decorrelation distances of the sea in either direction. This allows us to set $\hat{G}(\underline{w}) \sim \hat{G}(\underline{0})$ in the Fourier transformation over the modulation wave number range, and to set the rest of the integrand at its DC value, $p_1^2(\vec{s})$ in the Fourier transformation near $K = 0$. Further we will assume a separable pattern function $G = G_x(x)G_y(y)$; then we have the definitions

$$Lx \equiv \int G_x^2(x)dx \quad \text{and} \quad \hat{L}x \equiv \int G_x^4(x)dx \quad (x \to y) \tag{40}$$

From the definition (22) of the effective area A_e we have: $A_e = \hat{L}x\hat{L}y$. For Gaussian antenna beams, we have $\hat{L}x = Lx/\sqrt{2}(x \to y)$. For simplicity we represent the Foruier transform of the antenna pattern simply as a DC spike, i.e.,

$$\int \hat{G}(x,y)e^{-iKx}\, dxdy \to 2\pi\sqrt{2}\, Ly\, \delta(K) \tag{41}$$

From the above definitions, with the σ_{xy}^2 elements set to zero in m_{ij} (Eq. (16)), on expanding the integrand of (26) to second order and Fourier transforming we have the result

$$\begin{aligned} M_1(\underline{K}) = \left(\frac{\sqrt{2}\pi\, Lx\, Ly^2}{16R^4\cos^8\theta}\right) p_1^2(\alpha,\beta) \Bigg\{ & \delta(K) \\ & + \frac{\sqrt{2}\pi}{Ly}\cot^2\theta(1-\delta^2)\Bigg[[1 + (1+\Delta)(\alpha^2+\beta^2)^2]K^2F(\underline{K}) \\ & + \cot^2\theta\Bigg\{\Bigg[\frac{(1-\delta^2)^{-1}}{2}K^2\overline{F} + (\alpha^2\overline{K_x^2F} + 2\alpha\beta\overline{K_xK_yF} + \beta^2\overline{K_y^2F}\Bigg] * \overline{F}K^2 \\ & + \left(\frac{1+\Delta}{2}\right)\Bigg(\alpha_o^2(1-\alpha^2)\overline{K_x^2F} * \overline{K_x^2F} + [4\alpha_o^2\alpha^2\beta^2\overline{K_x^2F} + \alpha_o^2\beta_o^2(1-(\alpha-\beta)^2) \\ & \cdot \overline{K_xK_yF} + 4\beta_o^2\alpha^2\beta^2\overline{K_y^2F}] * \overline{K_xK_yF} + \beta_o^2(1-\beta^2)\overline{K_y^2F} * \overline{K_y^2F}\Bigg)\Bigg\}\Bigg]\Bigg\} \end{aligned} \tag{42}$$

In this we have let $\Delta \equiv \delta^4/2(1-\delta^2)$. As mentioned earlier, the convolution (*) only involves those groups of variables carrying the overbar.

Some features of the solution should be noted. The most important is the reciprocal Ly dependence of the signal part (non-DC part) of M_1. The decrease in modulation signal power with increasing Ly is the price paid for high directional resolution: of all the Fourier contrast waves contributing to the total modulation power the spectrometer is isolating a small subset that are travelling in the direction of radar look; consequently only a small fraction of the total spectral modulation power is being detected. The Ly^{-1} dependence of the solution can also be interpreted as follows: In a real, short-crested sea, waves are running out of step with each other across the extent Ly so that modulation power will add incoherently as $\sqrt{Ly}$. Thus the modulation power relative to the total average power decreases as $Ly^{-1/2}$, and the relative spectrum of modulation power as Ly^{-1}.

The directional resolution of the radar spectrometer is determined by the larger of the two effects (a) wave-front curvature on the surface and (b) the finite width of the data window Ly. The spectral window that results as the combined effect of (a) and (b) can be determined by redoing the foregoing analysis in the Fresnel approximation. The lag window $\hat{G}(\underline{w})$ becomes in the Fresnel approximation (assuming a Gaussian gain pattern),

$$\hat{G}(\underline{w}) \leftarrow \hat{G}(\underline{w}) \cdot \exp\left[-\kappa^2\left(\frac{Lx^2 w_x^2 + Ly^2 w_y^2}{2\pi R^2}\right)\right]. \tag{43}$$

The corresponding spectral window has a half power width,

$$\Delta K_x = \frac{2\sqrt{2\pi \ln 2}}{Lx}\left[1 + \frac{K^2 Lx^4 \csc^2\theta}{(2\pi R)^2}\right]^{1/2} \qquad (x \to y) \tag{44}$$

The directional resolution is given by

$$\Delta\Phi = \frac{\Delta K_y}{K} \qquad (\Delta K_y \ll K)$$

For example, if R = 700km, K = $2\pi/200$m, $\theta = 15°$ and Ly = 10km, then

$$\Delta\Phi = 0.76(1 + 7.6) = 6.5 \text{ degrees.}$$

We note that the second order part consists essentially of four convolutions involving the two-dimensional, directional wave spectrum $F(\underline{K})$. In principle, since the second-order terms are small, we ought to be able to retrieve F from M_1 by a process of iterative deconvolution, starting with a first guess $F(\underline{K}) \propto M_1(\underline{K})$.

To indicate, in rough terms, the amount of harmonic distortion resulting from the second-order terms in (42), we carry out a sample calculation in two-dimensions, using as a model spectrum a one-dimensional Phillips' equilibrium spectrum,

$$F(\hat{K}) = BH(\hat{K} - 1)\hat{K}^{-3} \tag{45}$$

where $\hat{K} = K/K_o$ is the scaled wavenumber, and H is the Heavyside step function. We use a value of the spectral constant B = 0.01 as this gives a realistic value of the significant wave slope δ_o and hence, of the expansion parameters δ and ϵ. From the definition (28) of δ_o and from (45) we have $\delta_o = \pi^{-1}\sqrt{2B} = 0.045$.

Figure 3 shows the results of the calculations for $\theta = 10°$ and $\theta = 15°$ for a range of roughness conditions, i.e., for a range of the parameter $\alpha_o = \tan\theta/\sigma_s$ where σ_s is given by Equation (33). For $\theta = 10$–$15°$, the harmonic distortion is quite tolerable, less than 30%, over the range of wind-speeds of practical importance.

MEASUREMENT SIGNAL-TO-NOISE RATIO

The result for M_1, Equation (42), may be expressed as

$$M_1(\underline{K}) = M_1(0)[\delta(K) + P_{mod}(\underline{K})] \tag{46}$$

where P_{mod} is the modulation spectrum.

$M_1(0)$ is proportional to the square of the average backscattered power; we can express it as

$$M_1(0) = \frac{\sqrt{2}\,\pi}{Lx}\,[\langle|S(k)|^2\rangle]^2 \tag{47}$$

The modulation index, defined for any azimuth Φ is

$$\mu(\Phi) = \int P_{mod}(K, \Phi)dK \tag{48}$$

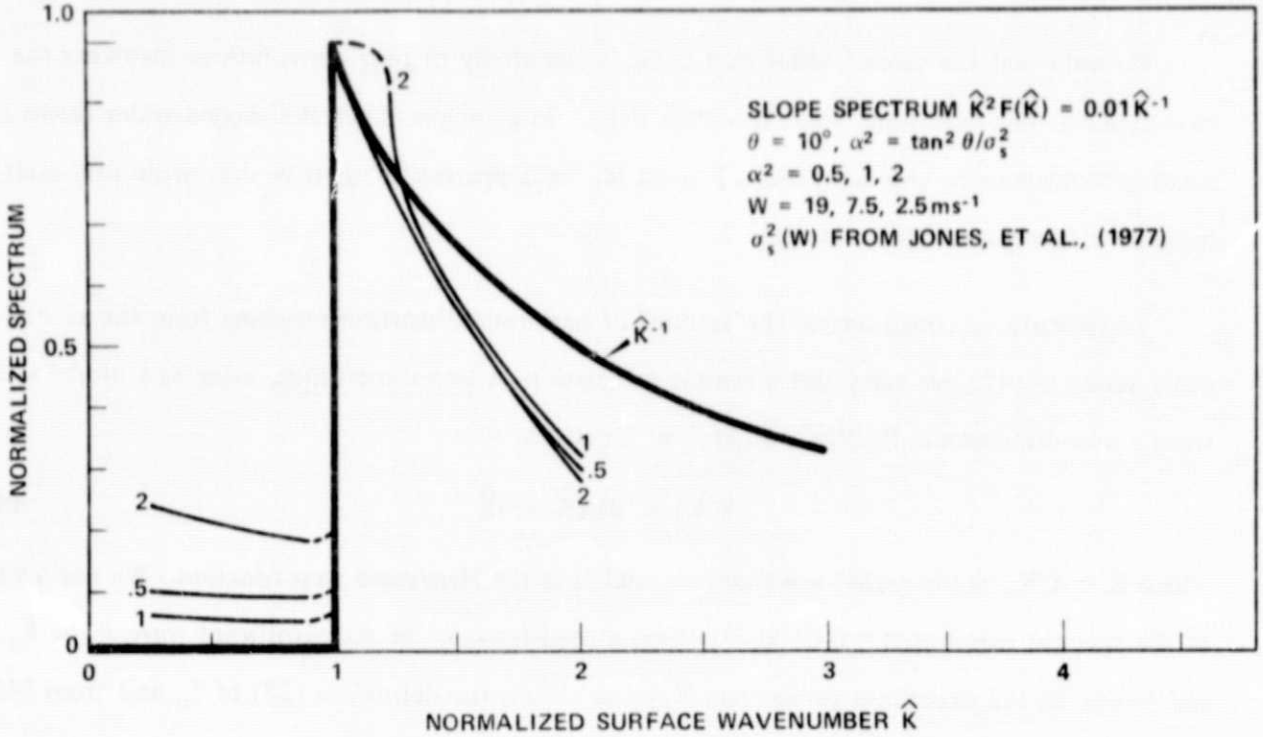

Figure 3a. Radar Spectrum vs. Surface Slope Spectrum

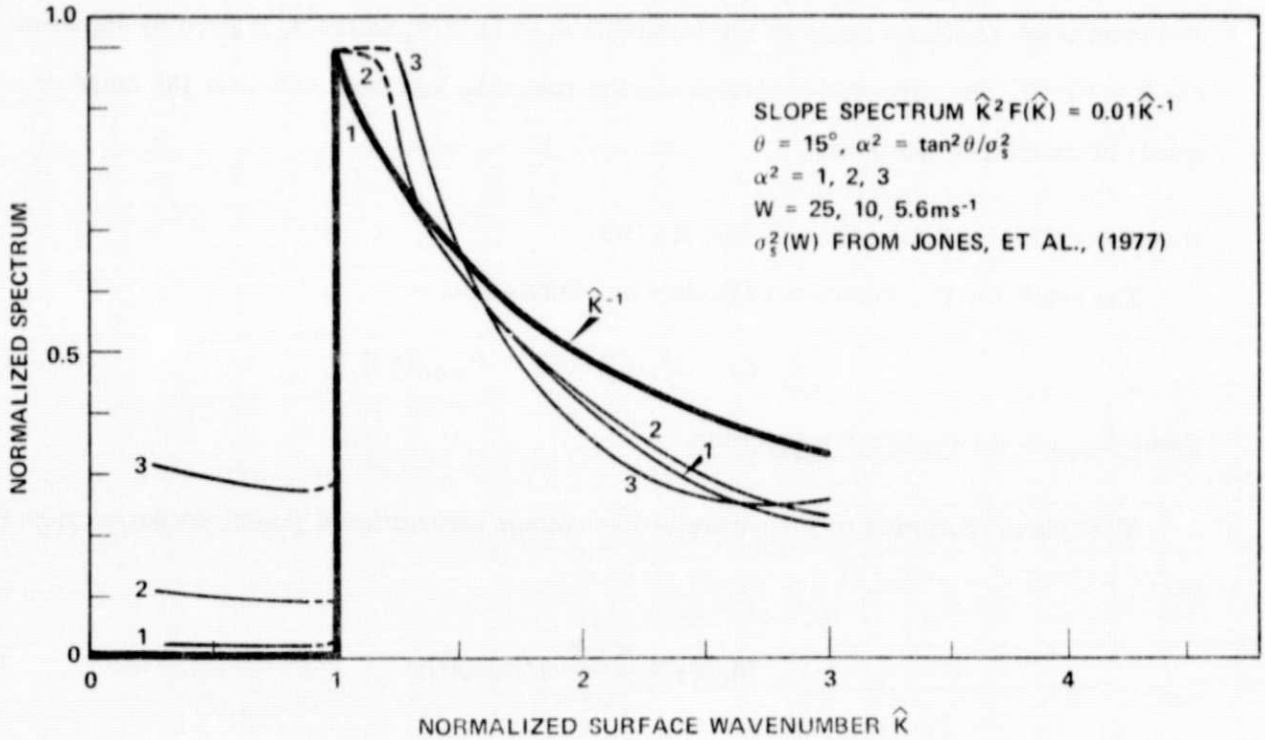

Figure 3b. Radar Spectrum vs. Surface Slope Spectrum

By (27), the total moment is

$$M(k,\kappa,\Delta k) = M_1(0)[\delta(K) + \delta(\Delta K) + P_{mod}(\underline{K}) + P_{mod}(\Delta K)] \tag{49}$$

Again, we have $\underline{K} = 2\kappa\sin\theta\,(\cos\Phi, \sin\Phi)$, $\kappa \equiv \omega/c$, and similarly for ΔK.

Analysis of Short Pulse System

The pulse bandwidth is assumed to be large compared to the dominant-wave modulation frequencies. Applying (49) to Equation (2), we find for the "per-pulse" (individual pulse) ensemble average output of the spectrum analyzer,

$$\langle Q(\omega_i)\rangle = \beta_{ai}\,\frac{\mathcal{E}^2}{T}\left[\frac{1 + \mu(\Phi)}{\beta_c} + P_{mod}(\omega,\Phi)\right] \tag{50}$$

where the filter constant is set equal to 1. β_{ai} is the noise bandwidth of the H_i filter; $\mathcal{E}$ is the average energy of the backscatter pulse,

$$\mathcal{E} = 2\pi\,\langle|S(k)|^2\rangle \int |E_o(\nu)|^2\,d\nu; \tag{51}$$

T is the effective backscattered pulse duration,

$$T = \sqrt{2}\sin\theta\,Lx/c \tag{52}$$

β_c is the effective pulse bandwidth,

$$\beta_c^{-1} = \beta_c^{-1}(\omega) = \frac{\int |E_o(\nu)|^2\,|E_o(\nu-\omega)|^2\,d\nu}{\left[\int |E_o(\nu)|^2\,d\nu\right]^2} \tag{53}$$

Let $\tau_c = 2\pi/c\beta_c(0)$ be the effective spatial pulse width. Then we can express the measurement signal-to-noise ratio, the ratio of the modulation spectrum to the broadband "Rayleigh clutter" spectrum, as

$$SNR = \frac{4\pi\sin\theta}{\tau_c}\,P_{mod}(\underline{K}) \tag{54}$$

where we have assumed $\mu \ll 1$. Let the directional wave height spectrum by given by the Phillips' form

$$F(\underline{K}) = 5 \times 10^{-3}\,(8/3\pi)\cos^4\Phi\,K^{-4} \tag{55}$$

Let $\theta = 15°$; assume a nominal wind speed of $15\,ms^{-1}$ and a corresponding dominant wavelength of 200 meters. With σ_s^2 given by (33), and assuming an upwind look, and using the linear part of (42) for P_{mod} we have $P_{mod} = .78\,m/Ly[km]$ and

$$SNR \sim \frac{2.6}{\tau_c[m]\,Ly[km]} \tag{56}$$

Reasonable SNR's thus are possible on a per-pulse spectrum analysis basis (i.e., without Doppler filtering) with τ_c on the order of a few meters and Ly on the order of 5-10km. SNR's as low as -10dB may be tolerable, if the measured spectrum is statistically stable, that is, if enough independent pulses are averaged so as to produce a stable clutter noise spectrum β_c^{-1} relative to the modulation signal spectrum. The time-bandwidth product (TBP) of the measurement is given by the analysis bandwidth β_a times the <u>total</u> integration time NpT where Np is a number of independent pulses. At the 90% confidence level, assuming large TBP, the length of the confidence interval is, relative to the signal level,

$$\pm \frac{1.64(SNR)^{-1}}{\sqrt{\beta_a TNp/2\pi}} = 90\% \text{ confidence interval}$$

If we set the analysis bandwidth at 25%, then, for our 200m wave example we have $\beta_a T/2\pi = (0.25)(Lx/200m)$. If SNR = 0.1, Lx = 25km, and Np = 1000, then P_{mod} is measurable to ±9% at the 90% confidence level.

As Alpers and Hasselman (1978) have shown for the narrow-band two-frequency measurement, Doppler filtering can be employed to increase the measurement SNR. One way to go about Doppler filtering in the short pulse spectrometer implementation is, in the time-domain, simply to keep track of or <u>stare</u> at the advected, frozen modulation pattern (e.g., as in image motion compensation). The maximum integration time is determined by the lesser of the wave period or the time it takes to move an appreciable fraction of the beam-spot in the along-satellite-track dimension. Both of these factors will restrict stare times to something on the order of 1 second. If we allow a 50% movement of the beam spot on the surface (in the along-track direction), then the maximum integration time available will be approximately, for looks to the side ($\Phi \geq 30°$):

$$T_{int} \sim \frac{R\Delta\Phi\cos\Phi}{2V} \tag{57}$$

where V is the spacecraft velocity. The Doppler spectrum width of backscatter from any fixed (stared-at) resolution cell on the surface is determined by the fastest interfering scattered waves from the extremities of the resolution cell (i.e., at the 3dB azimuth gain points):

$$\Delta f_{dop} \sim \frac{2\sqrt{2}\,V}{\lambda} \sin\theta\,|\sin\Phi|\,\Delta\Phi \tag{58}$$

The fast-time clutter spectrum β_c^{-1} will be reduced by slow-time Doppler filtering by the factor $\sqrt{\Delta f_{dop} T_{int}}$. Putting Ly = $R\Delta\Phi$, we get for the measurement SNR after Doppler filtering, (again with $\theta = 15°$, $\Phi \geq 30°$)

$$SNR \gtrsim \frac{27.5}{\tau_c\sqrt{R[km]\,\lambda[m]}} \tag{59}$$

a result which is independent of the azimuth beamwidth. With R = 700km, λ = 0.02m

$$SNR \gtrsim \frac{7.4}{\tau_c[m]} \tag{60}$$

For a 5km Ly, this is a 15dB improvement over the per-pulse SNR.

Analysis of Two-Frequency System

The transmitted waveform may be a short, wideband pulse or some tailored two-frequency waveform. Assume that the transmitted waveform Fourier transform $E_o(\nu)$ is constant over the bandpass β_1 and β_2 of the two filters H_1 and H_2; then on applying (49) to Equation (3) we get for ensemble average output of the correlator,

$$\langle Q_{12}\rangle = \frac{\mathcal{E}^2\beta_a}{T} P_{mod}(\Delta\nu_{12},\Phi) \tag{61}$$

The analysis bandwidth β_a is the combined noise bandwidth of the two channels. If the H_1 and H_2 filter bandwidths $\beta_1 = \beta_2$ then $\beta_a \equiv \sqrt{2}\beta_1$. $\mathcal{E}$ is the received energy in each channel; and T, again, is the effective backscattered pulse duration.

In (61), we note that there is no background, Rayleigh "clutter" noise spectrum as there is in the short pulse system. This is because the expected value (or infinite ensemble average) of the cross-correlation of the basic Rayleigh clutter noise at two frequencies ν_1 and ν_2 is zero (provided $\Delta\nu_{12}T \gg 1$). This follows from the definition of the basic unmodulated "clutter" process as a sample (of length T) of a stationary, Gaussian random process.

The measurement noise in the two-frequency system is the residual clutter noise that survives the cross-correlation over a finite integration time T. If $w_c(t)$ is the (unmodulated) noise process going into the integrator (Fig. 2), then we have

$$\langle Q_c \rangle = \int_0^T \langle w_c(t) \rangle \, dt = 0$$

Let σ_c^2 be the variance of $w_c(t)$ and β_c the bandwidth of $w_c(t)$. Then for large time-bandwidth products, $\beta_c T \gg 2\pi$, the standard deviation of the output of the integrator will be $\sigma_Q \sim \sqrt{2\pi/\beta_c T} \cdot \sigma_c T$.

A rigorous calculation of σ_Q is beyond the scope of the present work; unfortunately, Parzen and Shiren (1956), in their analysis, stop short of calculating σ_Q for the two-frequency system. To get on with the analysis we will simply assume that $\sigma_c = \mathcal{E}^2/T^2$ and that $\beta_c = \beta_a$. Then, the per-pulse SNR for the two-frequency system will be on the order of

$$\text{SNR} \sim (2\pi)^{-1/2} \beta_a^{3/2} T^{1/2} P_{mod}(\Delta\nu_{12}, \Phi) \tag{62}$$

The analysis bandwidth β_a is set at some fraction of the modulation frequency $\Delta\nu_{12}$ in accord with desired spectral resolution. Let $r_a = \beta_a/\Delta\nu_{12}$. Then, using the same sample conditions used in the short-pulse analysis, i.e., wherein $P_{mod}(K,0) = 0.78\,m/Ly[km]$, we have

$$\text{SNR} \sim 0.055\, r_a^{3/2} Lx^{1/2}[km]\, Ly^{-1}[km^{-1}] \tag{63}$$

Letting Lx = 25 km, Ly = 5 km, $r_a = 0.25$, then SNR = 0.007. This figure is not as good as the per pulse SNR for the short pulse system. E.g., for $\tau_c = 2$ m and Ly = 5 km, the short-pulse

SNR = 0.26, a factor of 32 greater. If the analysis bandwidth r is opened wide, $r_a = 1$, the two-frequency SNR becomes 0.06, and is comparable to the short-pulse SNR. The two-frequency SNR can also be improved by coherent Doppler integration. This would necessarily involve some kind of phase detection. If we assume an improvement factor of $\sqrt{\Delta f_{dop} T_{int}}$ (again with R = 700km, λ = 2cm), then the measurement SNR will be 0.1 (r_a = 0.25) and 0.85 for r_a = 1. (The reader is cautioned that we have been loose with certain numbers, i.e., with the effective integration time, T_{int} and Δf_{dop}, and σ_c.)

CONCLUSION

We have presented a three-dimensional physical optics solution for the generalized fourth-order moment of the surface transfer function in the case of near-vertical, specular backscatter from a Gaussian sea, and we have applied this solution to the analysis of the short-pulse and two-frequency techniques for the remote measurement of ocean wave directional spectra. The predicted modulation spectrum is found to bear a fairly good fidelity to the directional slope spectrum; harmonic distortion, or spectral smearing, is on the order of 20–30% or less. The solution's only serious defect, it is felt, is the Gaussian assumption for the ocean wave statistics. The measurement signal-to-noise problem for both short-pulse and two-frequency spectrometer implementations was examined briefly, and it was found that satellite measurement of the directional wave spectrum with either of these spectrometer systems appears to be feasible; it remains for future work to model diffraction and non-Gaussian wave statistics, and to perform a more thorough measurement signal-to-noise analysis; for example, trade-offs involving transmitter power, antenna gain and thermal noise must be considered.

REFERENCES

Alpers, W. and K. Hasselmann, The Two-Frequency Microwave Technique for Measuring Ocean Wave Spectra from an Airplane or Satellite, J. Boundary Layer Met., 13, 215-230, 1978.

Axline, R. M. and A. K. Fung, Numerical Computation of Scattering from a Perfectly Conducting Random Surface, IEEE Trans. Ant. Propagat., AP-26, 482-488, 1978.

Barrick, D. E., Wind Dependence of Quasi-Specular Microwave Sea Scatter, IEEE Trans. Antenna Propagat., AP-22, 135-136, 1974.

Beckmann, P. and A. Spizzichino, The Scattering of Electromagnetic Waves from Rough Surfaces, Pergamon Press, New York, 1963.

Brown, G. S., Backscattering from a Gaussian-Distributed Perfectly Conducting Rough Surface, IEEE Trans. Ant. Propagat., AP-26, 472-482, 1978a.

Cox, C. and W. Munk, Measurement of the Roughness of the Sea Surface from Photographs of the Sun's Glitter, J. Opt. Soc. Am., 44, 838-850, 1954.

Fisz, M., Probability Theory and Mathematical Statistics, John Wiley and Sons, New York, p. 160, 1963.

Jackson, F. C., A Curvature-Corrected Kirchoff Formulation for Radar Sea-Return from the Near Vertical, NASA CR-2406, April 1974a.

Jackson, F. C., Directional Spectra of Ocean Waves for Microwave Backscatter, Proc. URSI Specialists Meeting Microwave Scattering and Emission from the Earth, (E. Shanda, Ed.), Berne, Switz., 23-26, September 1974b.

Jackson, F. C., The Reflection of Impulses from a Non-linear Random Sea, to be published in J. Geophs. Res., 1979.

Jones, W. L., L. C. Schroeder and J. L. Mitchell, Aircraft Measurements of The Microwave Scattering Signature of the Ocean, IEEE J. Oceanic Eng., OE-2, 52-61, 1977

Kinsman, B., Wind Waves: Their Generation and Propagation on the Ocean Surface, Prentice-Hall, Inc., Englewood Cliffs, NJ, p. 306ff, 1963.

Parzen, E. and N. Shiren, Analysis of a General System for the Detection of Amplitude Modulated Noise, J. Math. Phys., 35, 278-288, 1956.

Phillips, O. M., The Dynamics of the Upper Ocean, Cambridge University Press, London, p. 111, 1966.

Ruck, G., D. E. Barrick and T. T. Kaliszewski, Bistatic Sea State Monitoring, Battelle Columbus Labs. Technical Report, Columbus, Ohio, June 1972.

Tomiyasu, K., Short Pulse Wide-Band Scatterometer Ocean Surface Signature, IEEE Trans. Geoscience Elec., GE-9, 175-177, 1971.

Weissman, D. E., Two Frequency Radar Interferometry Applied to the Measurement of Ocean Wave Height, IEEE Trans. Ant. Propagat., AP-21, 649-656, 1975.

Wilheit, T. T., The Effect of Wind on the Microwave Emission from the Ocean's Surface at 37 GHz, NASA Tech. Memo. 79588, July 1978. (To be published in J. Geophys. Res., 1979.)

Wright, J. W., A New Model of Sea Clutter, IEEE Trans. Ant. Propagat., AP-14, 749-754, 1968.

Wright, J. W., W. J. Plant and W. L. Jones, Ocean Wave Radar Modulation Functions, EOS Trans. Am. Geophys. Union, 59, 1101 (Abstract only), December 1978.