https://ntrs.nasa.gov/search.jsp?R=19800020271 2020-03-21T16:54:29+00:00Z

N O T I C E

THIS DOCUMENT HAS BEEN REPRODUCED FROM MICROFICHE. ALTHOUGH IT IS RECOGNIZED THAT CERTAIN PORTIONS ARE ILLEGIBLE, IT IS BEING RELEASED IN THE INTEREST OF MAKING AVAILABLE AS MUCH INFORMATION AS POSSIBLE

"Made available under NASA sponsorship in the interest of early and wide dissemination of Earth Resources Survey Program information and without liability for any use made thereof."

E80-10171
JSC-11848

NASA CR-
160596

"AS-BUILT" DESIGN SPECIFICATION FOR THE I-100 TAPE READ CONSOLIDATION PROGRAM (FULOI)

Job Order 71-695

(TIRF 76-0060)

(E80-10171) AS-BUILT DESIGN SPECIFICATION FOR THE I-100 TAPE READ CONSOLIDATION PROGRAM (FULOI) (Lockheed Electronics Co.) 74 p HC A04/MF A01 CSCL 05B

N80-28772

Unclas
G3/43 00171

Prepared By
Lockheed Electronics Company, Inc.
Aerospace Systems Division
Houston, Texas

Contract NAS 9-15200
For
EARTH OBSERVATIONS DIVISION
SCIENCE AND APPLICATIONS DIRECTORATE

National Aeronautics and Space Administration

LYNDON B. JOHNSON SPACE CENTER

Houston, Texas

July 1977

LEC-9925
Revision A

"AS-BUILT" DESIGN SPECIFICATION
FOR THE
I .00 TAPE READ CONSOLIDATION PROGRAM
(FULOI)

Job Order 71-695

(TIRF 76-0060)

Prepared By

T. R. Kell
E. O. Data Products Department

APPROVED BY

LEC

P. L. Krumm, Supervisor
Applications Software Section

NASA

J. M. Sulester
Procedure 1 Implementation
Manager

D. H. Hay, Chief
Systems and Facilities Branch

Prepared By
Lockheed Electronics Company, Inc.
For
Earth Observations Department
Science and Applications Directorate

NATIONAL AERONAUTICS AND SPACE ADMINISTRATION
LYNDON B. JOHNSON SPACE CENTER
HOUSTON, TEXAS
July 1977

CONTENTS

Section		Page
1.	SCOPE.	1
	1.1 GENERAL	1
2.	APPLICABLE DOCUMENTS.	1
3.	SYSTEM DESCRIPTION	1
	3.1 HARDWARE DESCRIPTION.	1
	3.2 SOFTWARE DESCRIPTION.	1
	3.2.1 FULOI 1	1
	3.2.2 DSET, DUSET, HREAD, FFIND, LREED . . .	2
	3.2.3 RREAD, RSKIP.	3
	3.2.4 ZOOOOM.	3
	3.2.5 HPROS	4
	3.2.6 GABI	4
	3.2.7 HOCUTT.	4
	3.2.8 CRUNCH.	5
	3.2.9 TCHLST.	5
	3.2.10 FULOI 2	6
	3.2.11 GBCALC	7
	3.2.12 T2D	7
	3.2.13 T2DR	8
	3.3 FLOWCHARTS	8
	3.4 LISTINGS.	51

Appendices

A COMMONS FCOM AND HCOM A-1

B FILES 11 FORMAT "F11" B-1

C USER INSTRUCTIONS FOR THE CONSOLIDATED TAPE READ PROGRAM C-1

1. SCOPE

1.1 GENERAL

This specification establishes the design of the I-100 Tape Read Consolidation Program (FULOI).

2. APPLICABLE DOCUMENTS

- TIRF 76-0060
- IMAGE-100 modifications for LACIE: Interim Requirements Specification LEC-9577
- JSC Image-100 Users' Manual, LEC-10263, Part II, Section 2.2

3. SYSTEM DESCRIPTION

3.1 HARDWARE DESCRIPTION

N/A

3.2 SOFTWARE DESCRIPTION

The purpose of this program is to read imagery in a variety of formats, expand or contract it spatially, transform it spectrally by either a matrix or linear gain equation or both, and display the resultant data on the I-100 CRT.

3.2.1 FULOI 1

This program requests all input parameters from the user such as:

1. Data location — file, MT, XT, whatever
2. Data format — Universal, LARSYS, ERTS
3. Data coordinates — both input as well as I-100 output
4. Spectral transformation controls -- both matrix and linear gains, biases, input channels, and I-100 channels.

The data is digested in such a way as to be readily usable to FULOI 2.

3.2.1.1 Linkages

Calls a variety of other software components and initiates execution of FULOI 2.

3.2.1.2 Inputs

Parameters as above and tape header record.

3.2.1.3 Outputs

Parameter request messages data file FULOI.DAT for FULOI 2, TPARAM.DAT, and HEADER.DAT for future FULOO.

3.2.2 DSET, DUSET, HREAD, FFIND, LREED

This module consisting of five entry points performs the following:

1. Initiates the connection between the program and the desired imagery input
2. Dissolves the above
3. Reads and processes the header record
4. Finds the desired input field
5. Reads one line, one channel of the desired field.

3.2.2.1 Linkages

Calls HPROS, RREAD, and RSKIP.

3.2.2.2 Inputs

Input imagery data and program arguments

3.2.2.3 Outputs

HREAD outputs the converted header to common HCOM via HPROS. LREED outputs the read data to the calling program.

3.2.3 RREAD, RSKIP

This module skips records on the input imagery to get to the desired data (RSKIP) and reads the foreign or F-11 files and transmits to the calling program.

3.2.3.1 Linkages

Uses the system modules LECTAP, FSTVID, and ERRMSG.

3.2.3.2 Inputs

Data from the imagery data source.

3.2.3.3 Outputs

Outputs a properly formatted data record to the calling program.

3.2.4 ZOOOOM

This module takes the imagery position data input by the operator and generates four tables which give the input line and pixel for each output line and pixel.

3.2.4.1 Linkages

None

3.2.4.2 Inputs

TX1, TX2, TY1, TY2, IX1, IX2, IY1, IY2.

3.2.4.3 Outputs

Four tables as above.

3.2.5 HPROS

This module moves various data from the tape header to common HCOM (App. A.)

3.2.5.1 Linkages

None

3.2.5.2 Inputs

Header record

3.2.5.3 Outputs

HCOM

3.2.6 GABI

This module moves gain/bias data from the Universal header to the linear gain/bias table.

3.2.6.1 Linkages

Optionally calls HOCUTT to modify the gain/bias data.

3.2.6.2 Input

Universal header, data format specifies

3.2.6.3 Outputs

Linear gain/bias values.

3.2.7 HOCUTT

This program converts gains and bias output from GABI to a normalized gain/bias uniform for all four channels.

3.2.7.1 Linkages

None

3.2.7.2 Input

Gains and biases

3.2.7.3 Output

Gains and biases

3.2.8 CRUNCH

This module compacts the matrix gain/bias/channel tables to allow easier use.

3.2.8.1 Linkages

None

3.2.8.2 Inputs

Above tables.

3.2.8.3 Outputs

Above tables - crunched.

3.2.9 TCHLST

This module generates

1. A list of input data channels required
2. A table indicating the relative position of each channel in the input data required
3. A table indicating which I-100 channels are to be modified.

3.2.9.1 Linkage

None

3.2.9.2 Inputs

1. The output of CRUNCH
2. The linear gain/bias tables

3.2.9.3 Outputs

The above output tables.

3.2.10 FULOI 2

This module is a executable task. It is initiated by FULOI 1. Its purpose is to

1. Read the input data needed
2. Read the I-100 channels needed
3. Spectrally transform the input data via GBCALC
4. Spatially transform the input data via the output tables of ZOOOOM
5. Write the I-100 channels to memory.

3.2.10.1 Linkages

Calls the routines of 3.2.2, GBCALC, and various system library routines.

3.2.10.2 Inputs

Reads file FULOI.DAT to obtain needed control parameters. Reads the input imagery data source. Reads the I-100 channels needed.

6.2.10.3 Outputs

I-100 channel data.

3.2.11 GBCALC

This program on each call calculates the spectrally transformed output data (one pixel, up to five channels) needed to output to the I-100 CRT.

3.2.11.1 Linkages

None

3.2.11.2 Inputs

1. Outputs of TCHLST (3.2.9)
2. Flags indicating linear/matrix gain calculations.
3. Input data pixel position.
4. Output data pixel position.
5. Input data buffer address.
6. Output data buffer address.

3.2.11.3 Outputs

Spectrally transformed pixel data; placed in the proper position in the output data buffer.

3.2.12 T2D

This module is an auxillary program to FULOI. Its purpose is to read a foreign tape and write it to a specified file. Currently it is set up to recognize Universal, LARSYS, and ERTS formats by header record length. Other formats can be input by specifying format "OTHER' which overrides the format checking.

3.2.12.1 Linkages

Uses library module T2DR.

3.2.12.2 Inputs

1. Output file name.
2. Estimated number of disk blocks to be output.
3. Input tape controller.
4. Input tape unit number.
5. Input tape file number.
6. Input tape format type.

3.2.12.3 Outputs

The program prints number of tape records read, the number of blocks written, and the number of parity errors encountered on the input tape.

3.2.13 T2DR

This program is called T2D. It reads the input tape, inserts pointers, format type, and record size, and uses the FSTVID package to write the record out.

3.2.13.1 Linkages

FSTVID, LEC TAP

3.2.13.2 Inputs

Subroutine arguments and the input tape.

3.2.13.3 Outputs

The input tape is output to the disk in a Files 11 form as specified in Appendix A.

3.3 FLOWCHARTS

3.3.1 FULOI 1

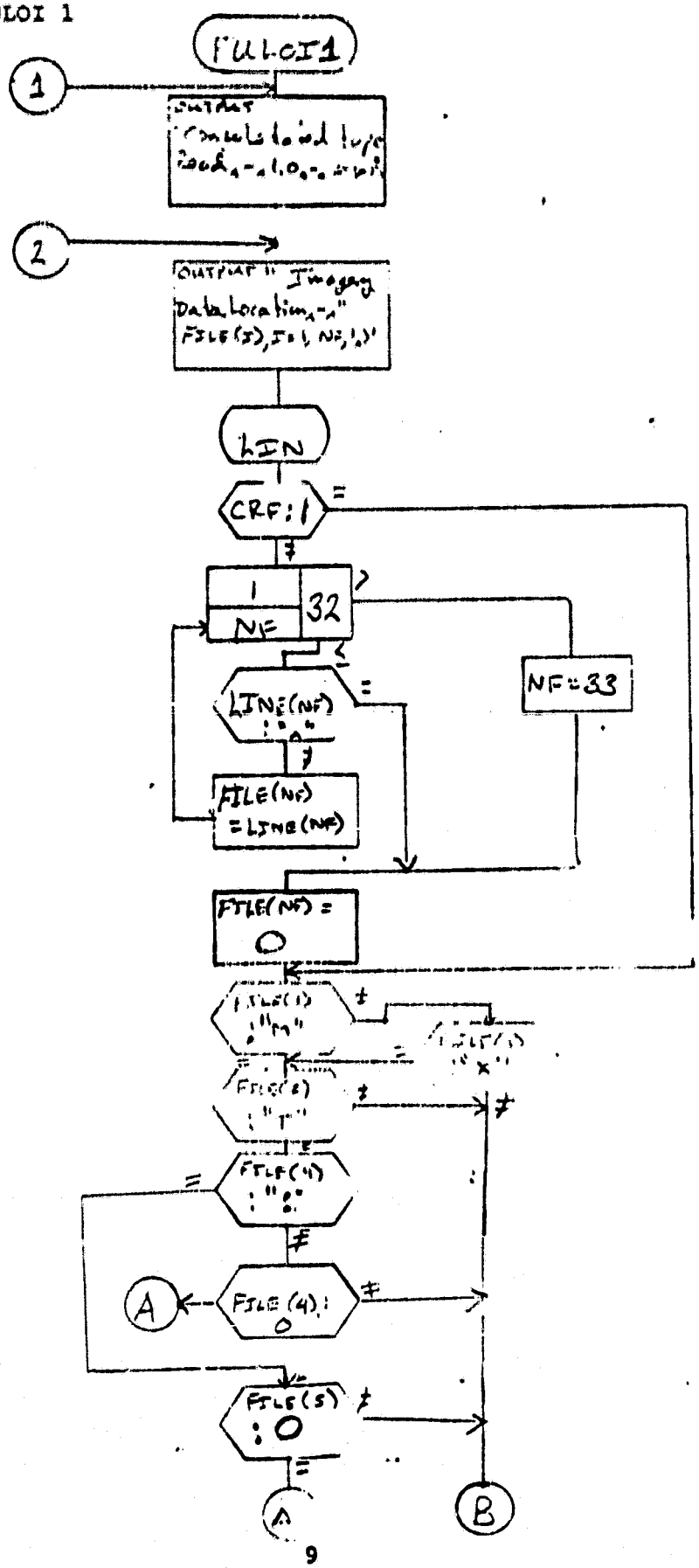

ORIGINAL PAGE IS
OF POOR QUALITY

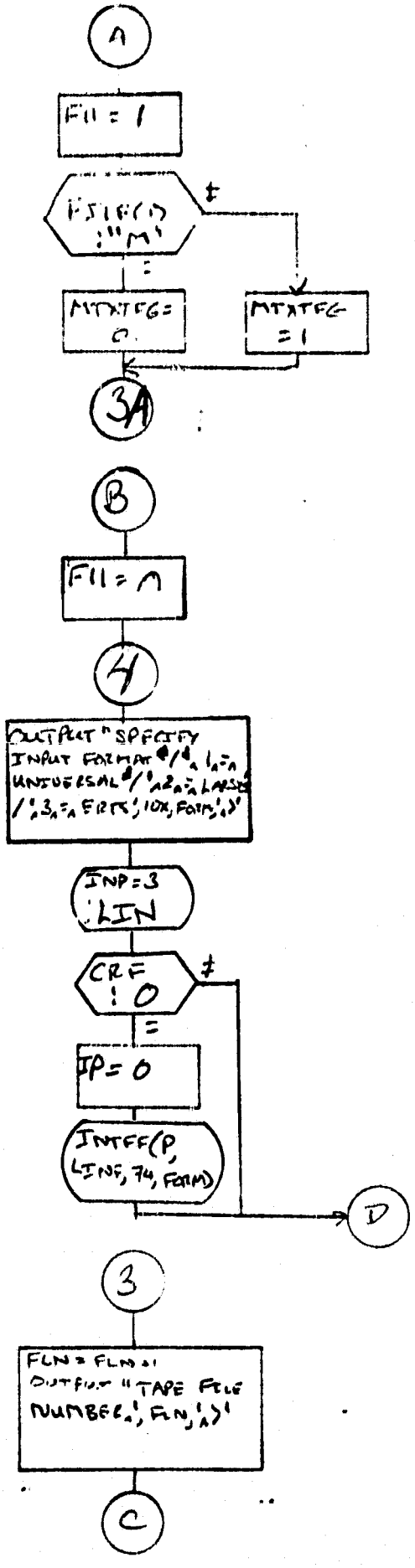
A
F11 = 1
FILE(1) :"M"
MTXTFG = 0
MTXTFG = 1
3A
B
F11 = 0
4
OUTPUT "SPECIFY INPUT FORMAT"/"1=UNIVERSAL"/"2=LARSYS"/"3=ERTS",10X,FORM,">"
INP=3 :LIN
CRF :0
IP=0
INTFF(P, LINE, 74, FORM)
D
3
FLN = FLN+1
OUTPUT "TAPE FILE NUMBER",FLN,">"
C

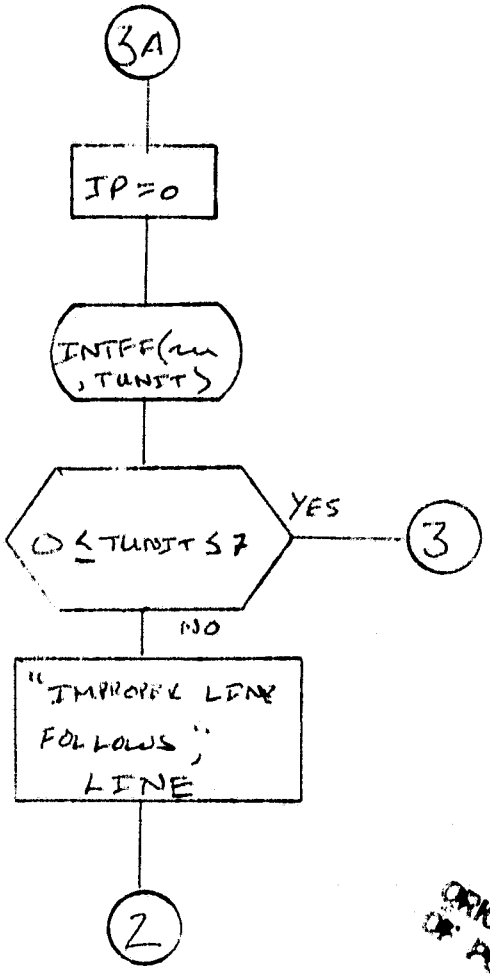

ORIGINAL PAGE IS
OF POOR QUALITY

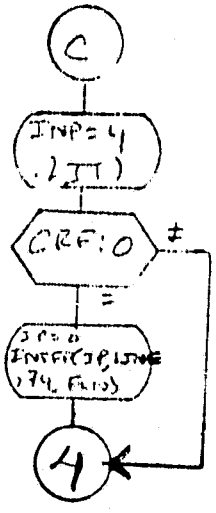

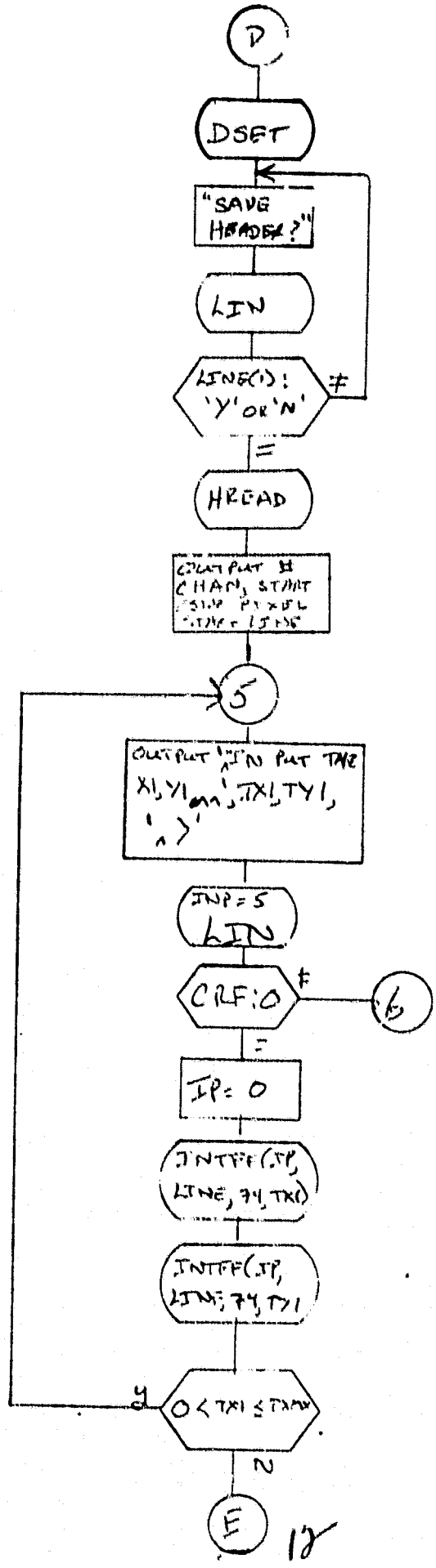
D
DSET
"SAVE HEADER?"
LIN
LINE(1): 'Y' OR 'N'
≠
=
HREAD
OUTPUT # CHAN, START
5
OUTPUT 'IN PUT THE X1, Y1, TX1, TY1, ' >'
INP = 5
LIN
CRF: 0
≠
6
=
IP = 0
INTFF(IP, LINE, 74, TX1)
INTFF(IP, LINE, 74, TY1
0 < TX1 ≤ TXMX
Y
N
E

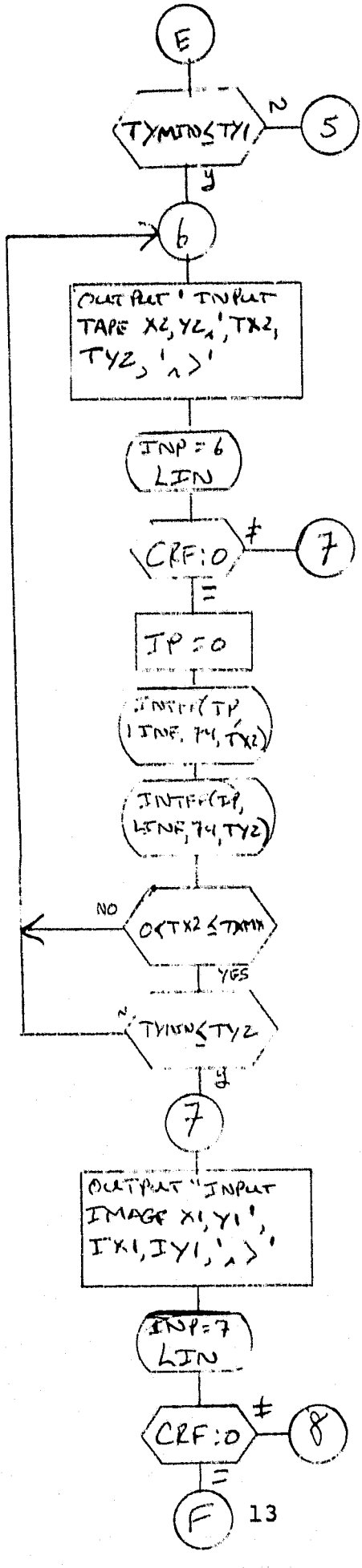
E
TYMIN≤TY1
N
5
y
6
OUTPUT 'INPUT TAPE X2,Y2,',TX2, TY2,',>'
INP=6 LIN
CRF:0
≠
7
=
IP=0
INTFF(IP, LINF,74,TX2)
INTFF(IP, LINF,74,TY2)
NO
0<TX2≤TXMX
YES
N
TYMIN≤TY2
y
7
OUTPUT "INPUT IMAGE X1,Y1', IX1,IY1,',>'
INP=7 LIN
CRF:0
≠
8
=
F

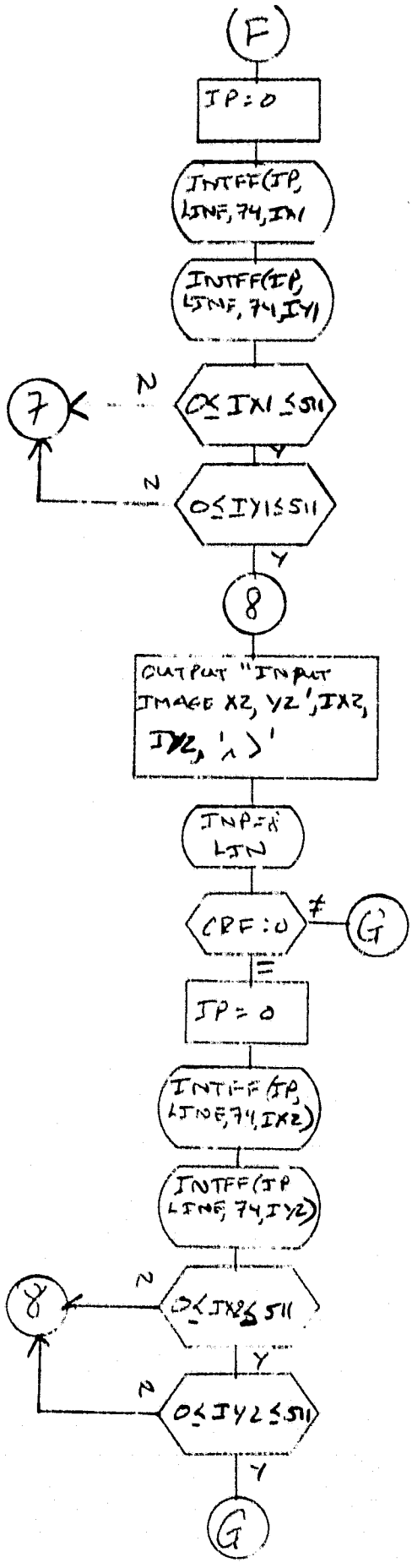

ORIGINAL PAGE IS OF POOR QUALITY

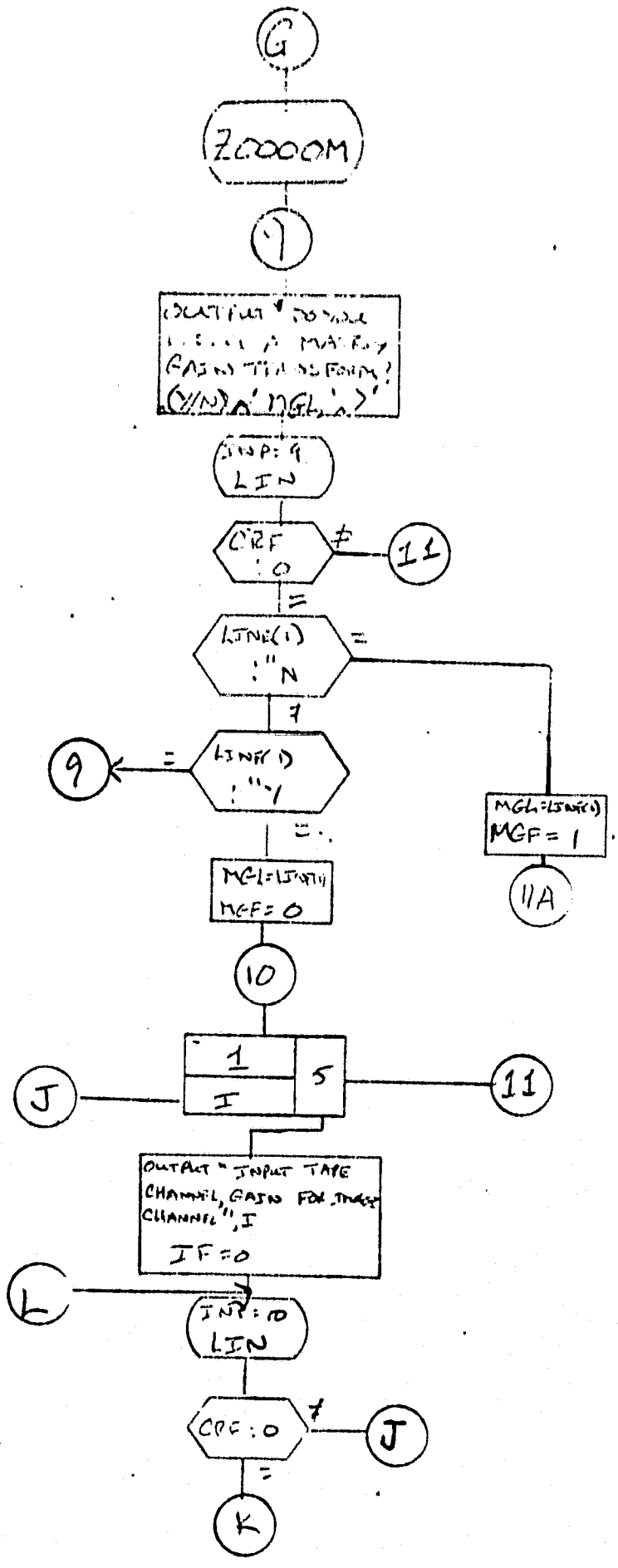
G
ZOOOOM
9
OUTPUT "DO YOU
GAIN TRANSFORM?
(Y/N) ∧' MGL, ∧ >'
INP: 9
LIN
CRF
: 0
≠
11
=
LINE(1)
: "N
=
≠
9
=
LINE(1)
: "Y
=
MGL=LINE(1)
MGF=0
MGL=LINE(1)
MGF=1
11A
10
1
I
5
J
11
OUTPUT "INPUT TAPE
CHANNEL, GAIN FOR
CHANNEL", I
IF=0
L
INP: 10
LIN
CRF: 0
≠
J
=
K

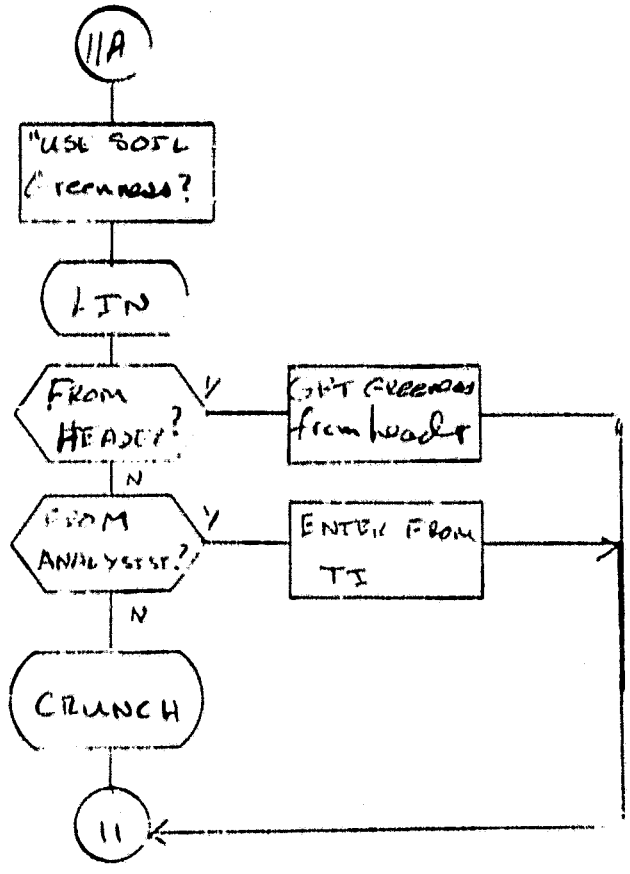

ORIGINAL PAGE IS
OF POOR QUALITY

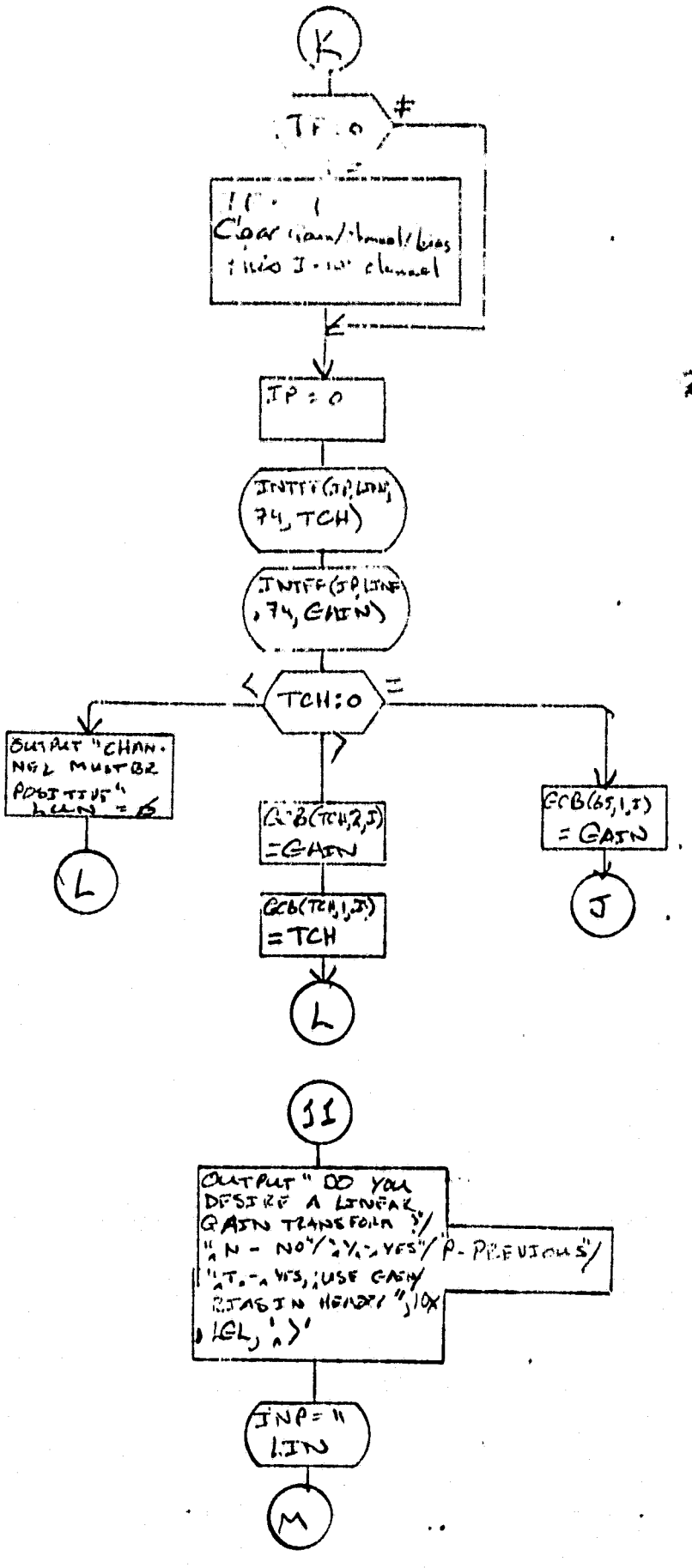
K
IP = 0
≠
=
IP = 1
Clear gain/channel/bias
this I-10 channel
IP = 0
INTFF(IP,LINE,
74, TCH)
INTFF(IP,LINE
,74, GAIN)
TCH:0
<
=
>
OUTPUT "CHAN-
NEL MUST BE
POSITIVE"
LUN = 6
L
GCB(TCH,2,I)
=GAIN
GCB(TCH,1,I)
=TCH
L
GCB(65,1,I)
= GAIN
J
11
OUTPUT " DO YOU
DESIRE A LINEAR
GAIN TRANSFORM ?"/
"N - NO"/"Y - YES"/"P - PREVIOUS"/
"T - YES, USE GAIN/
BIAS IN HEADER ",10X
,LGL, ">'
INP = "
LIN
M

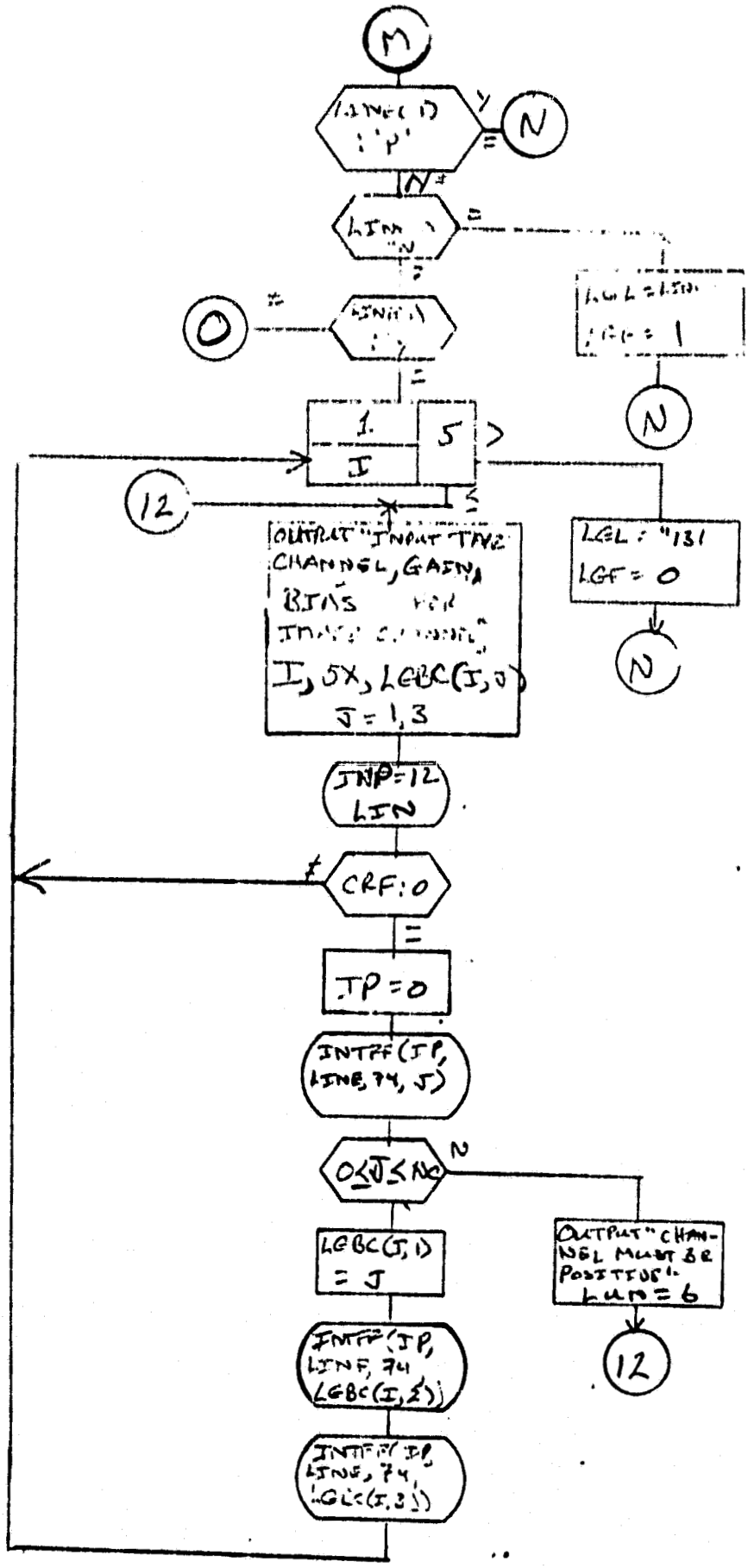
M
N
O
1
I
5
12
OUTPUT "INPUT TAPE CHANNEL, GAIN, BIAS FOR IMAGE CHANNEL"
I, 5X, LGBC(I,J)
J = 1,3
LGL = "131
LGF = 0
N
INP=12
LIN
CRF:0
IP=0
INTFF(IP, LINE, 74, J)
0≤J≤NC
N
LGBC(I,1) = J
OUTPUT "CHANNEL MUST BE POSITIVE"
LUN=6
12
INTFF(IP, LINE, 74, LGBC(I,2))
INTFF(IP, LINE, 74, LGBC(I,3))

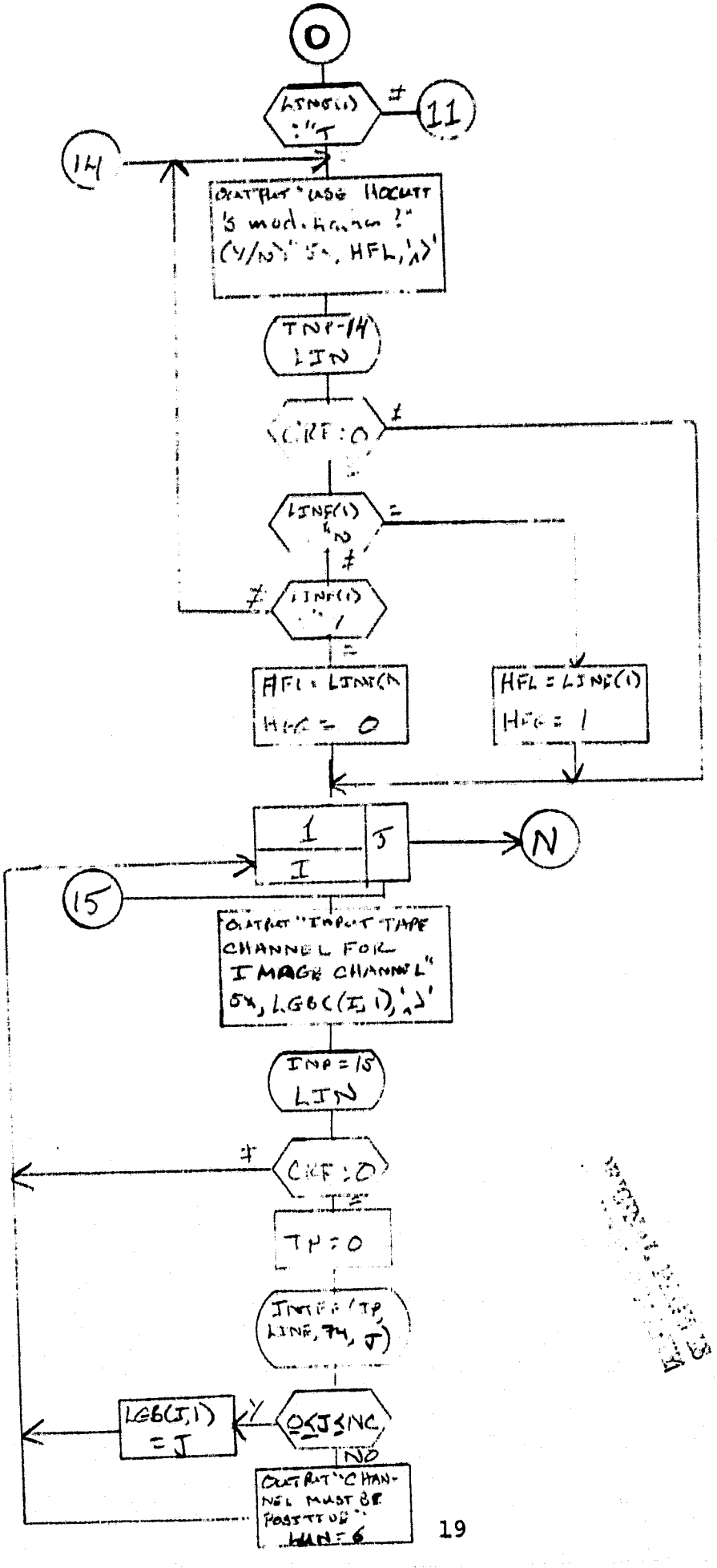
0
LINE(1) :"T
11
14
OUTPUT "USE HOCUTT 's modification ?" (Y/N):" 5x, HFL,'^>'
INP-14 LIN
CRF:0
LINE(1) "N
LINE(1) "Y
HFL = LINE(1) HFG = 0
HFL = LINE(1) HFG = 1
1
I
J
N
15
OUTPUT "INPUT TAPE CHANNEL FOR IMAGE CHANNEL" 5x, LGBC(I,1),'^>'
INP = 15 LIN
CRF:0
TP = 0
INTEF (TP, LINE, 74, J)
0≤J≤NC
LGB(I,1) = J
NO
OUTPUT "CHANNEL MUST BE POSITIVE" LUN = 6

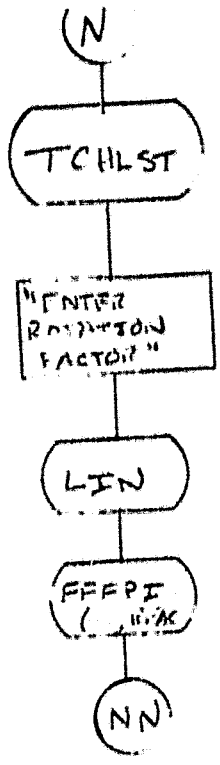
N
TCHLST
"ENTER
RADIATION
FACTOR"
LIN
FFFPI
NN

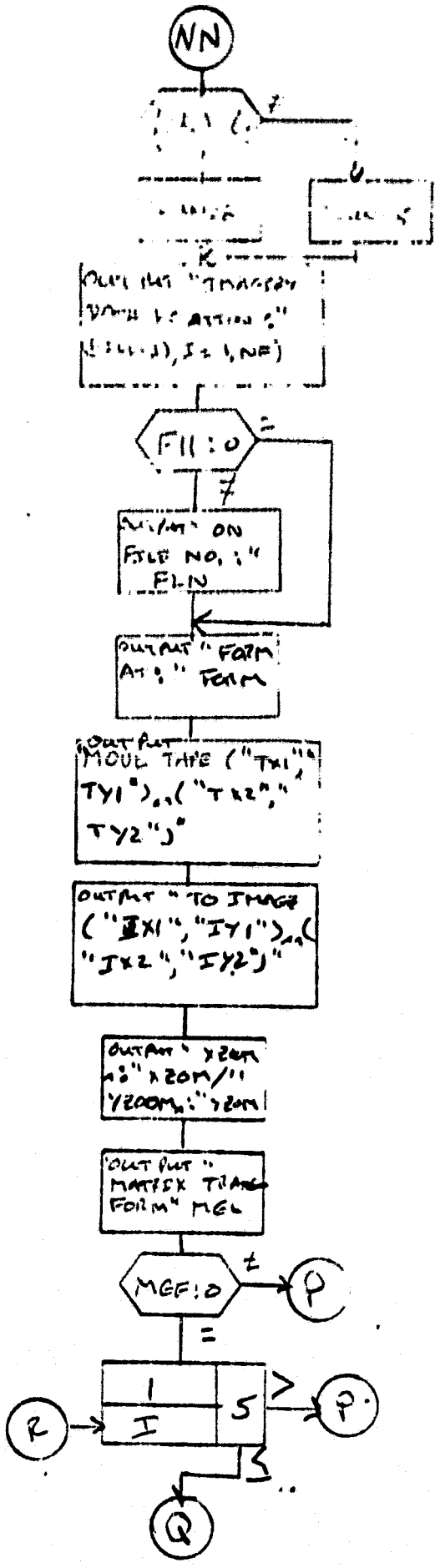

ORIGINAL PAGE IS
OF POOR QUALITY

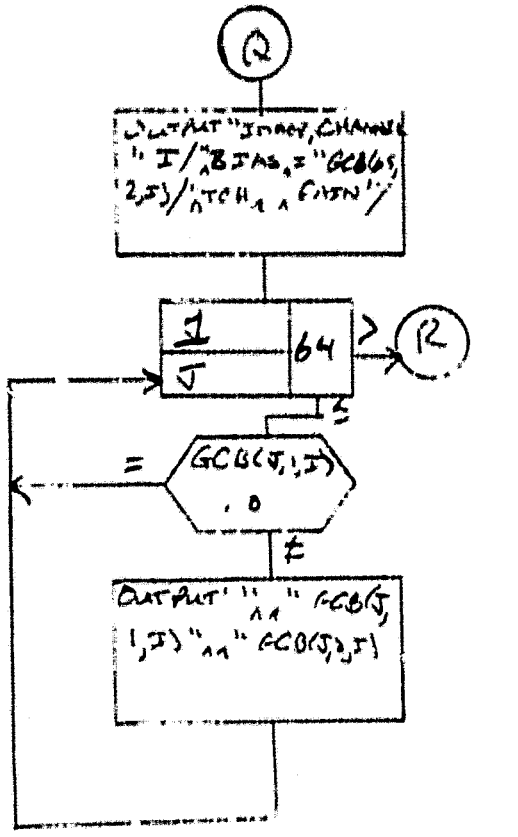
Q
OUTPUT "IMAGE, CHANNEL
" I/"BIAS = "GCB(65,
2,I)/"TCH FAIN"/
1
J
64
>
R
≤
=
GCB(J,1,I)
.0
≠
OUTPUT " " GCB(J,
1,I) " " GCB(J,2,I)

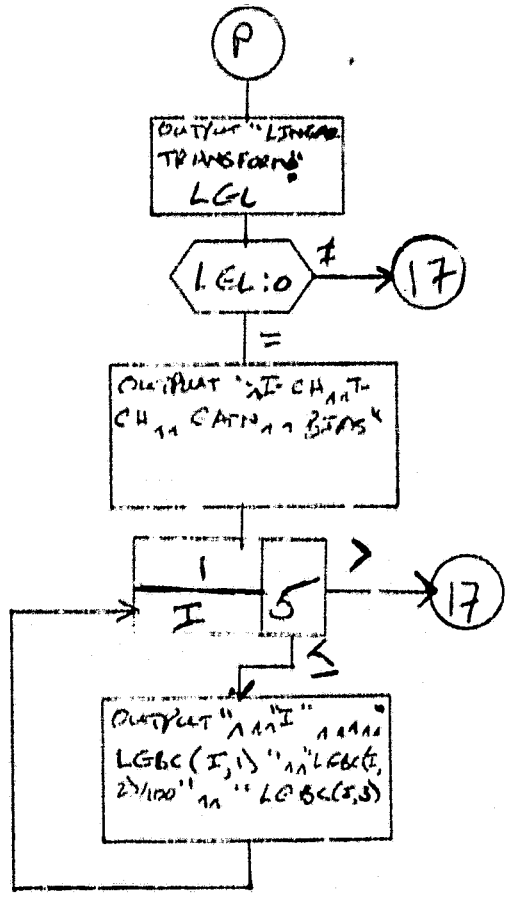
P
OUTPUT "LINEAR
TRANSFORM"
LGL
LGL:0
≠
17
=
OUTPUT "I-CH T-
CH GAIN BIAS"
1
I
5
>
17
≤
OUTPUT " " I " "
LGBC(I,1) " " LGBC(I,
2)/100 " " LGBC(I,3)

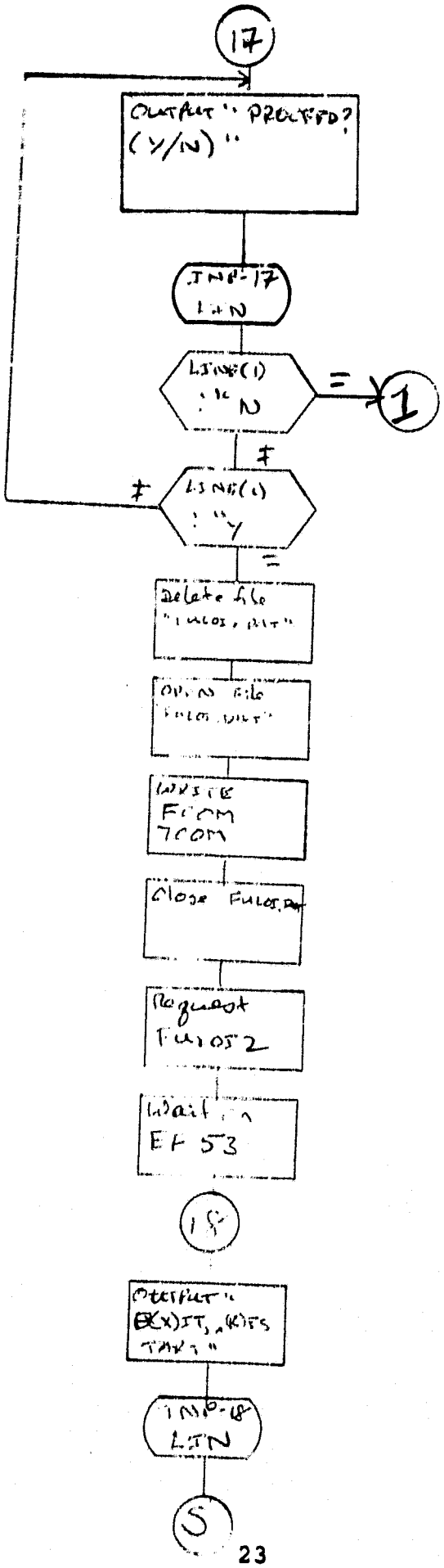
17
OUTPUT "PROCEED? (Y/N)"
INP-17 LIN
LINE(1) : "N
=
1
≠
LINE(1) : "Y
≠
=
Delete file
Open file
WRITE FCOM TCOM
Close
Request
Wait on EF 53
18
OUTPUT "
INP-18 LIN
5

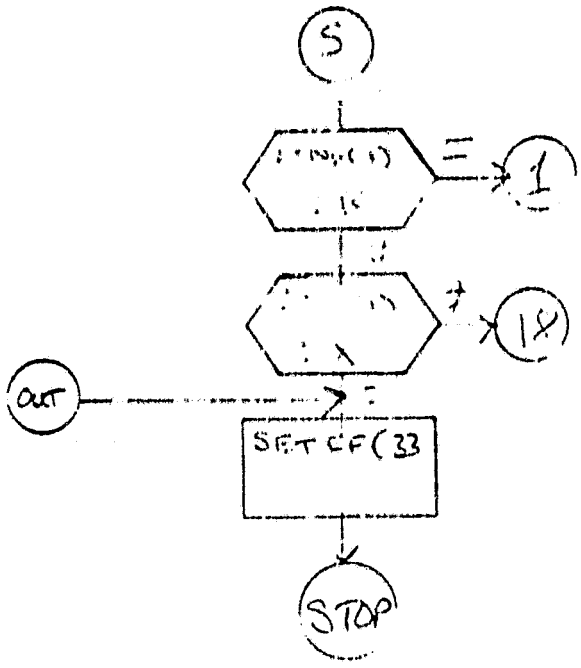

ORIGINAL PAGE IS
OF POOR QUALITY

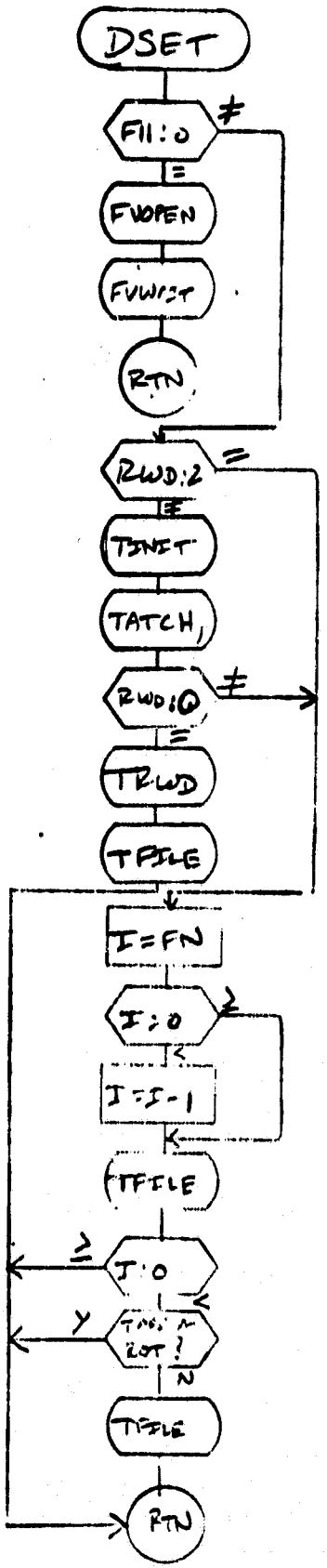
DSET
FII:0
≠
=
FVOPEN
FVWRIT
RTN
RWD:2
=
≠
TINIT
TATCH
RWD:0
≠
=
TRWD
TFILE
I=FN
I:0
≥
<
I=I-1
TFILE
≥
I:0
<
Y
N
TFILE
RTN

LUN
RWD

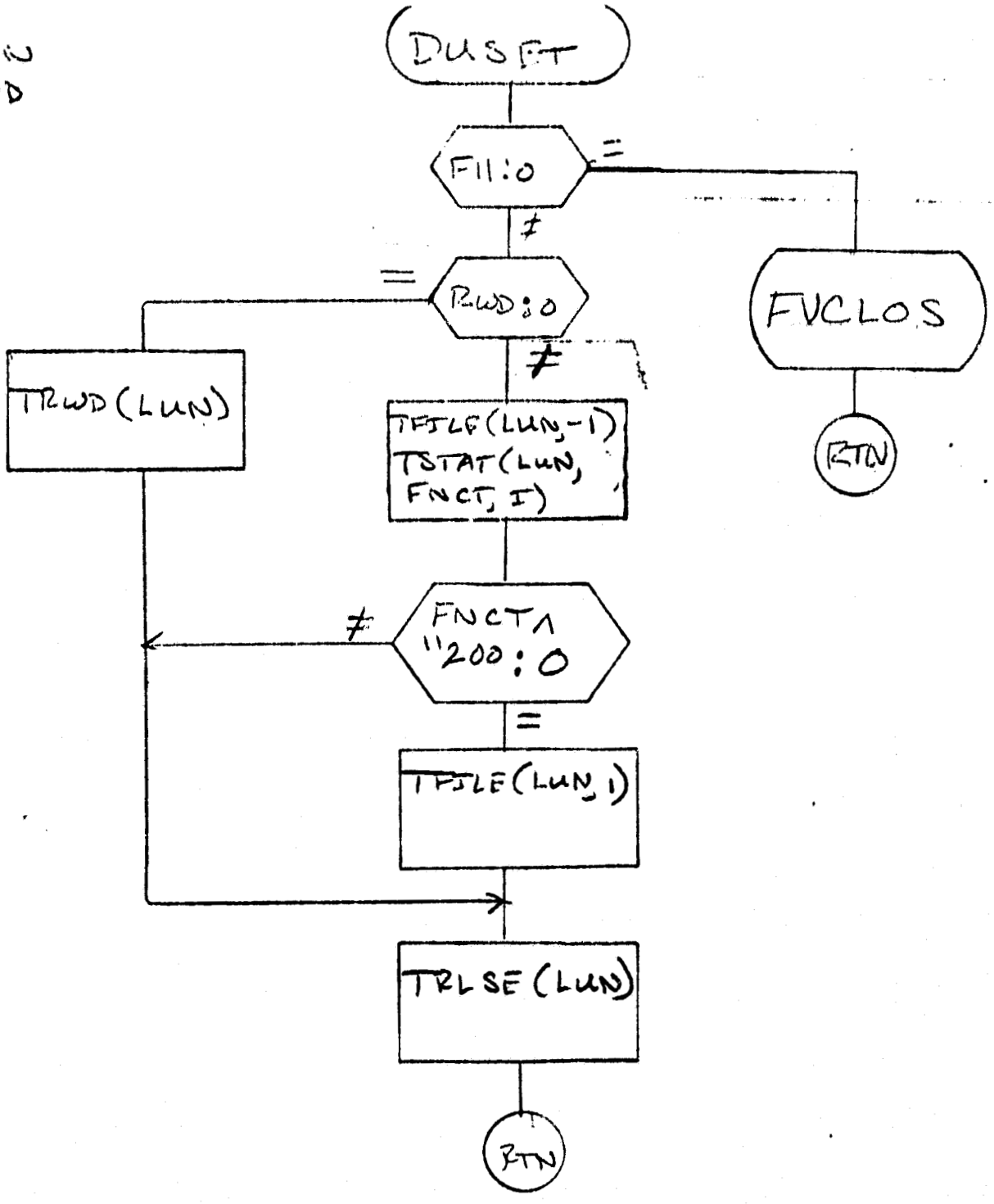
DUSFT
FIL:0
=
≠
RWD:0
=
≠
FVCLOS
RTN
TRWD(LUN)
TFILE(LUN,-1)
TSTAT(LUN,
FNCT, I)
FNCT∧
"200:0
≠
=
TFILE(LUN, 1)
TRLSE(LUN)
RTN

BUF

BUFSZ

HEADER

LUN

COMMON /UTRCOM/

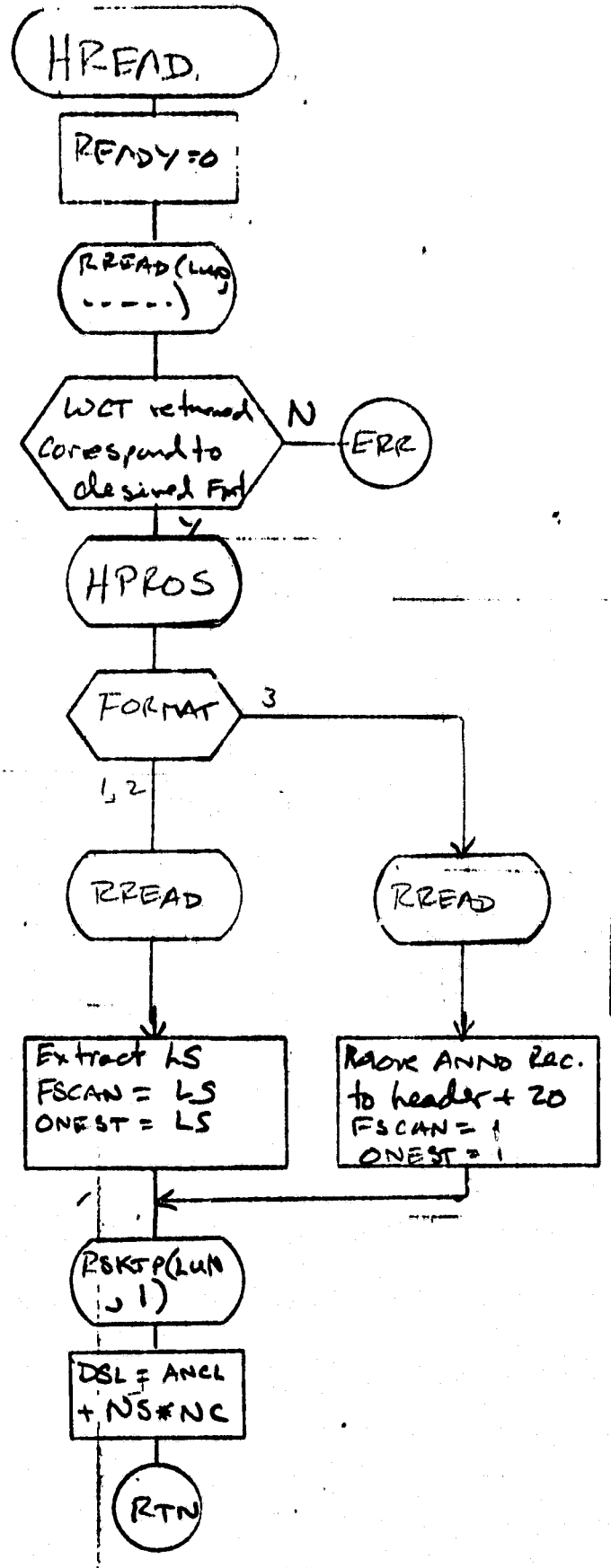

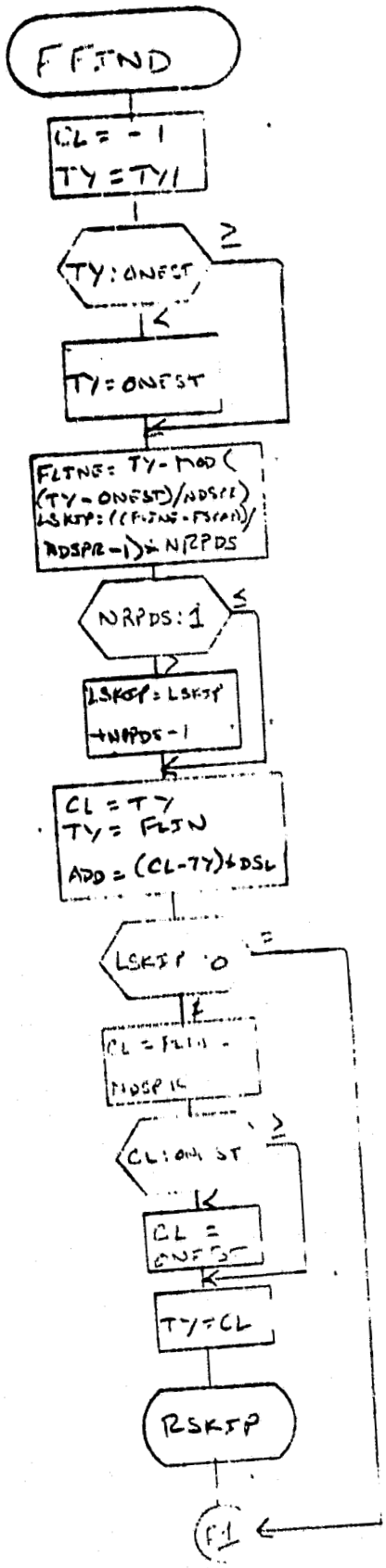

ORIGINAL PAGE IS
OF POOR QUALITY

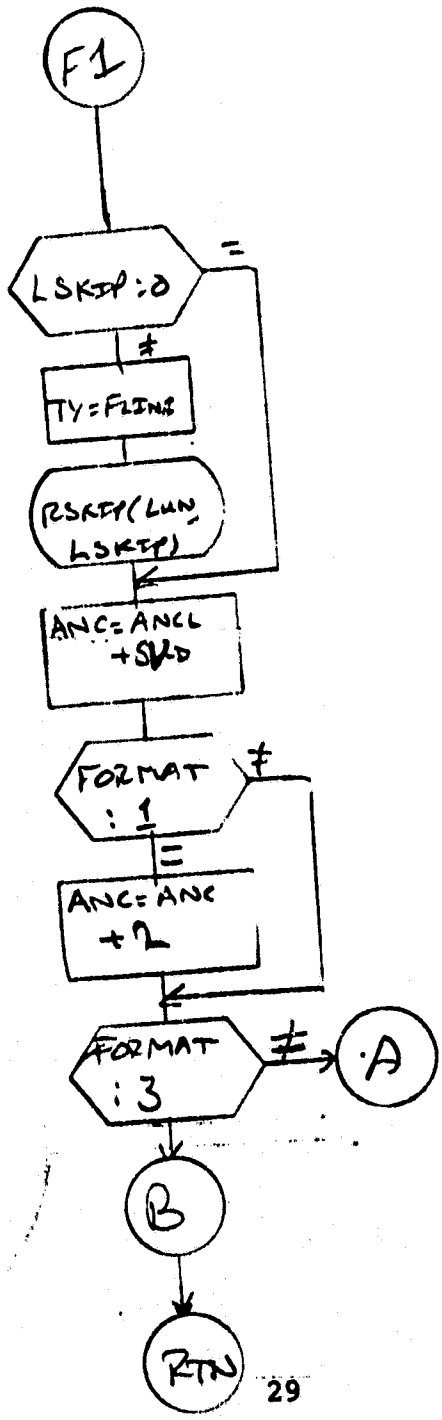
F1
LSKIP:0
=
≠
TY=FLING
RSKIP(LUN,
LSKIP)
ANC=ANCL
+SKD
FORMAT
:1
≠
=
ANC=ANC
+2
FORMAT
:3
≠
A
B
RTN

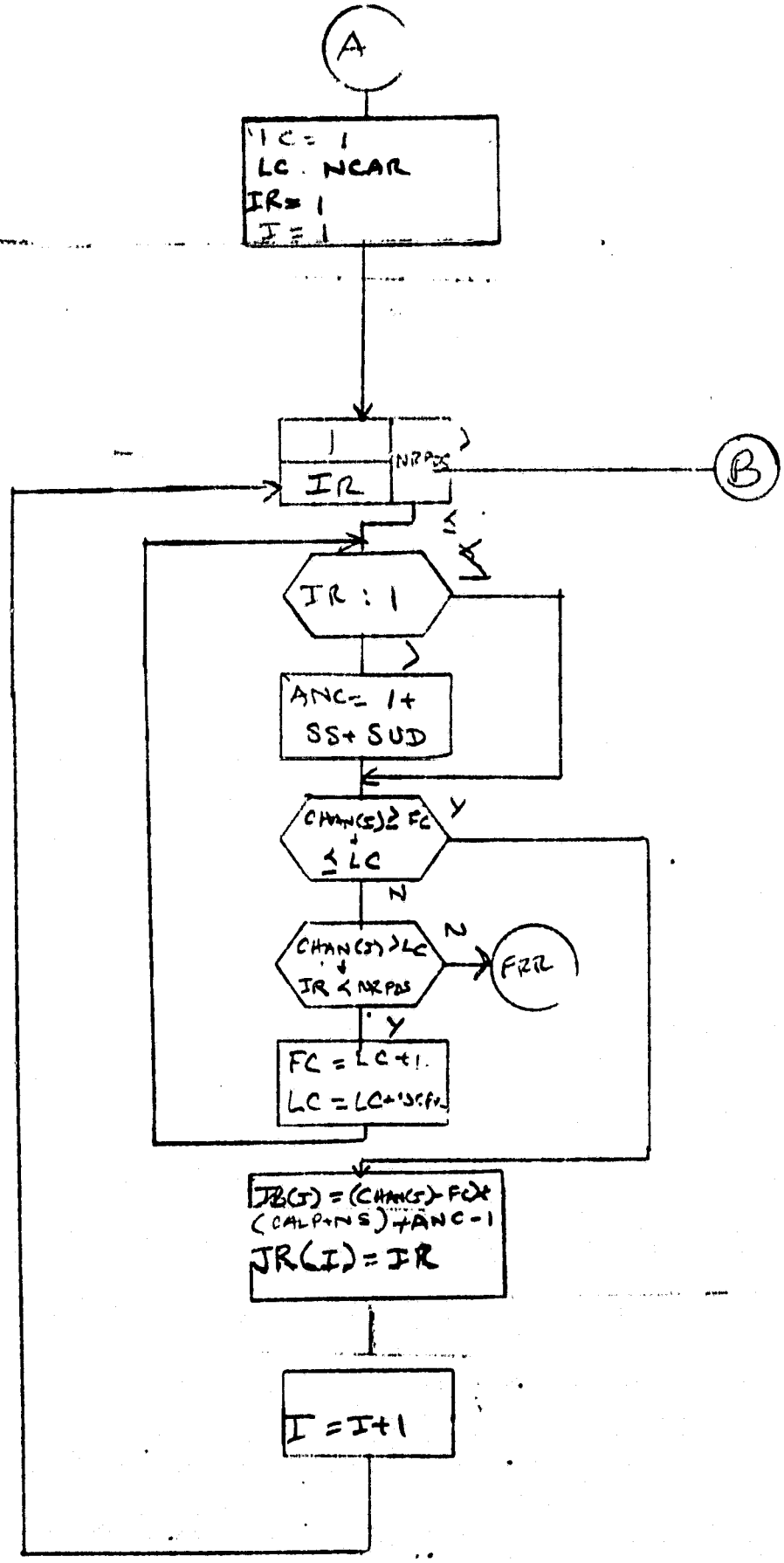
A
LC = 1
LC . NCAR
IR = 1
I = 1
1
IR
NRPDS
B
IR : 1
ANC = 1 +
SS + SUD
CHAN(I) ≥ FC
≤ LC
Y
N
CHAN(I) > LC
IR < NRPDS
N
FRR
Y
FC = LC + 1
LC = LC + NCFR
JB(I) = (CHAN(I) - FC) *
(CALP + NS) + ANC - 1
JR(I) = IR
I = I + 1

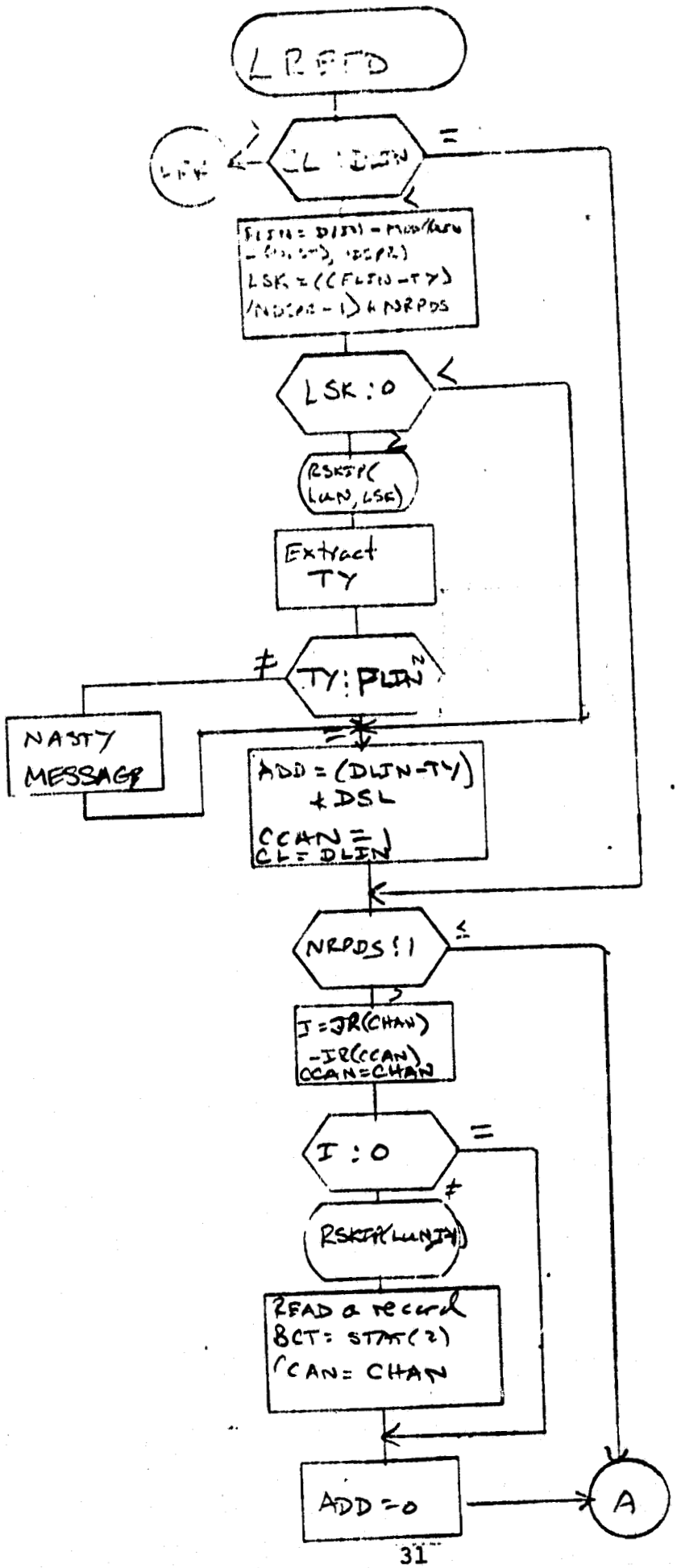
LREFD
CL : DLIN
=
LSK : 0
RSKIP(LUN, LSK)
Extract TY
TY : FLIN
≠
NASTY MESSAGE
ADD = (DLIN-TY) + DSL
CCAN = 1
CL = DLIN
NRPDS : 1
≤
I = IR(CHAN) - IR(CCAN)
CCAN = CHAN
I : 0
=
≠
READ a record
BCT = STAT(2)
CCAN = CHAN
ADD = 0
A

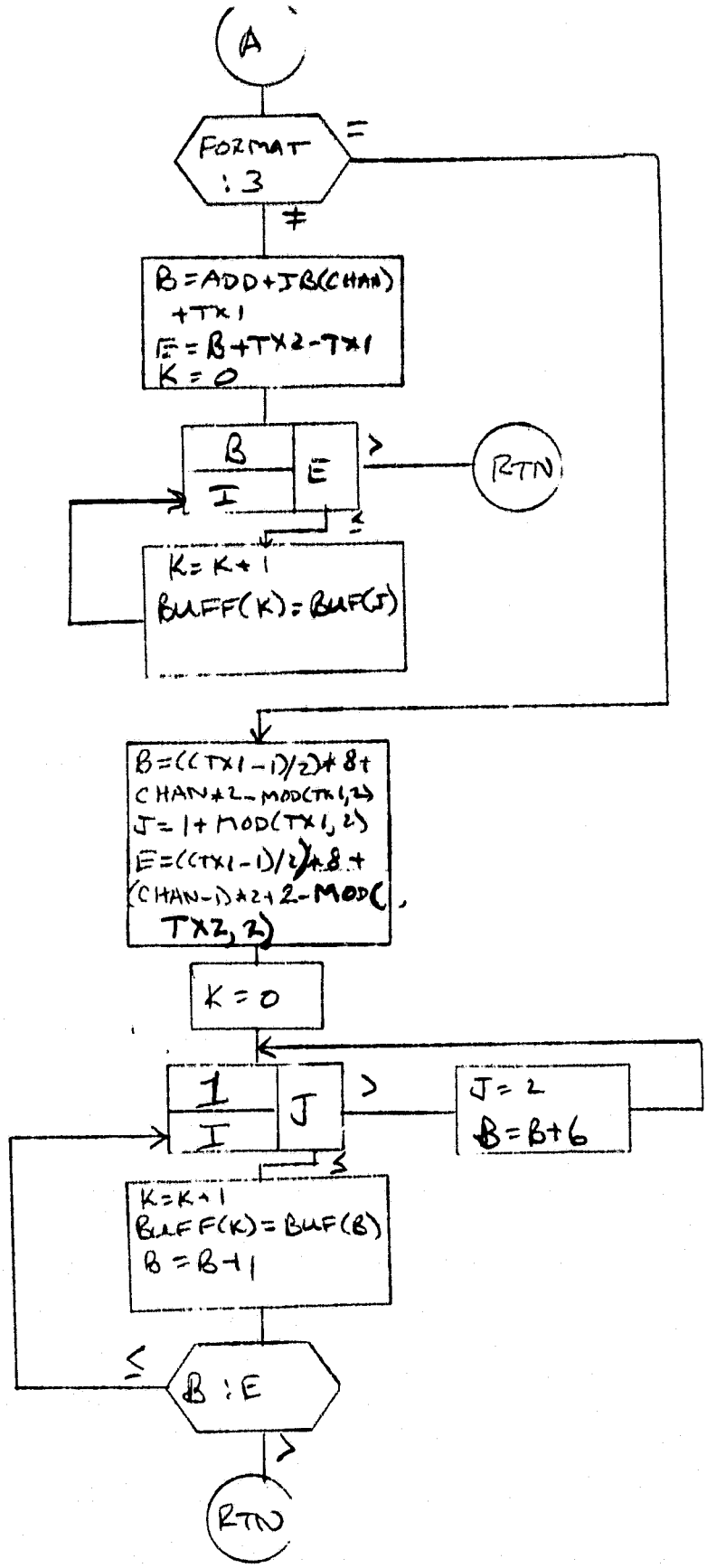
A
FORMAT
:3
=
≠
B=ADD+JB(CHAN)
+TX1
E=B+TX2-TX1
K=0
B
I
E
>
≤
RTN
K=K+1
BUFF(K)=BUF(J)
B=((TX1-1)/2)*8+
CHAN*2-MOD(TX1,2)
J=1+MOD(TX1,2)
E=((TX1-1)/2)*8+
(CHAN-1)*2+2-MOD(
TX2,2)
K=0
1
I
J
>
J=2
B=B+6
≤
K=K+1
BUFF(K)=BUF(B)
B=B+1
B : E
≤
>
RTN

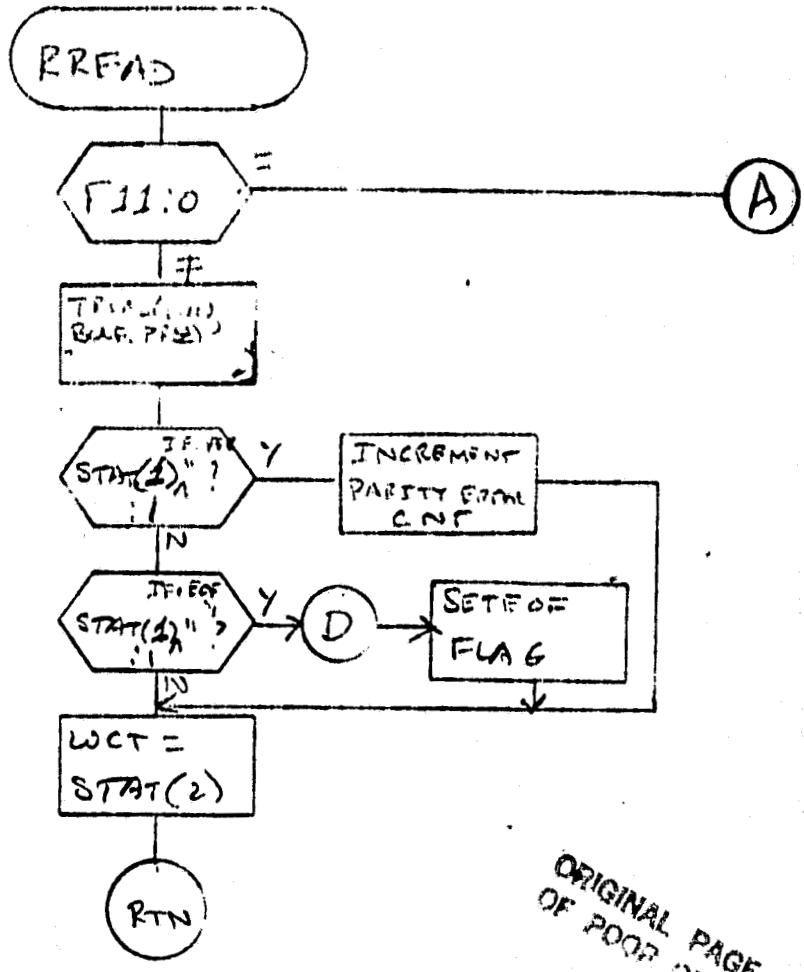

ORIGINAL PAGE IS
OF POOR QUALITY

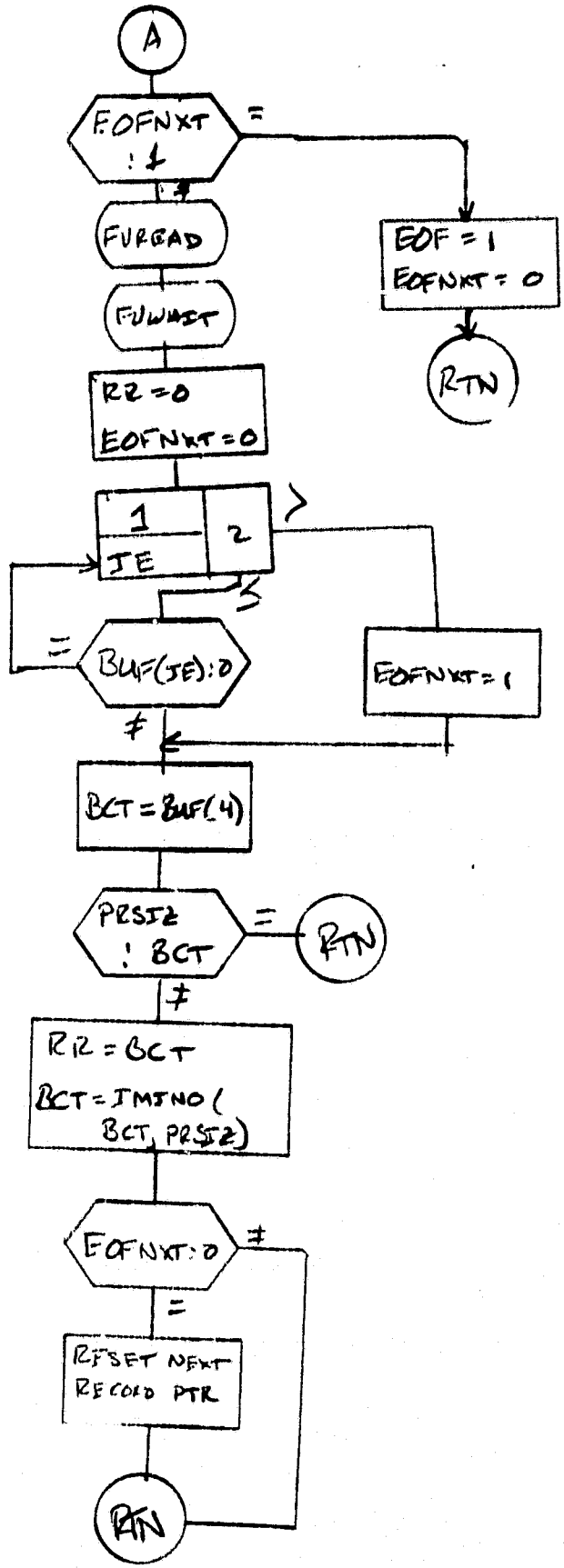
A
FOFNXT : 1
=
EOF = 1
EOFNXT = 0
RTN
FURBAD
FUWAIT
R2 = 0
EOFNXT = 0
1
JE
2
=
BUF(JE) : 0
EOFNXT = 1
≠
BCT = BUF(4)
PRSI2 : BCT
=
RTN
≠
R2 = BCT
BCT = IMINO (
BCT, PRSI2)
EOFNXT : 0
≠
=
RESET NEXT
RECORD PTR
RTN

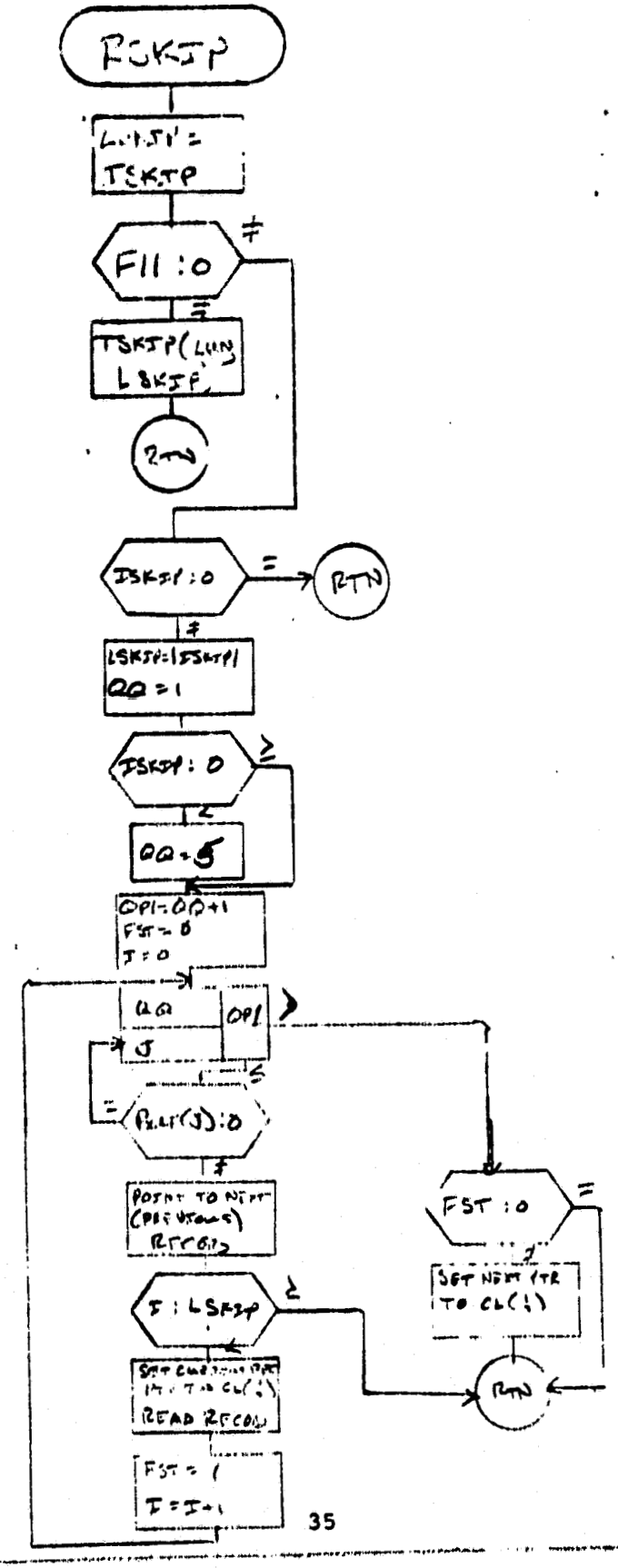
RSKIP
TSKIP
F11 : 0
TSKIP(LUN
LSKIP
RTN
ISKIP : 0
RTN
LSKIP=|ISKIP|
QQ = 1
ISKIP : 0
QQ = 5
QP1=QQ+1
FST = 0
I = 0
QQ
QP1
J
POINT TO NEXT
(PREVIOUS)
RECORD
I : LSKIP
READ RECORD
FST = 1
I = I+1
FST : 0
SET NEXT PTR
TO CL(1)
RTN

3.3.4 ZOOOOM

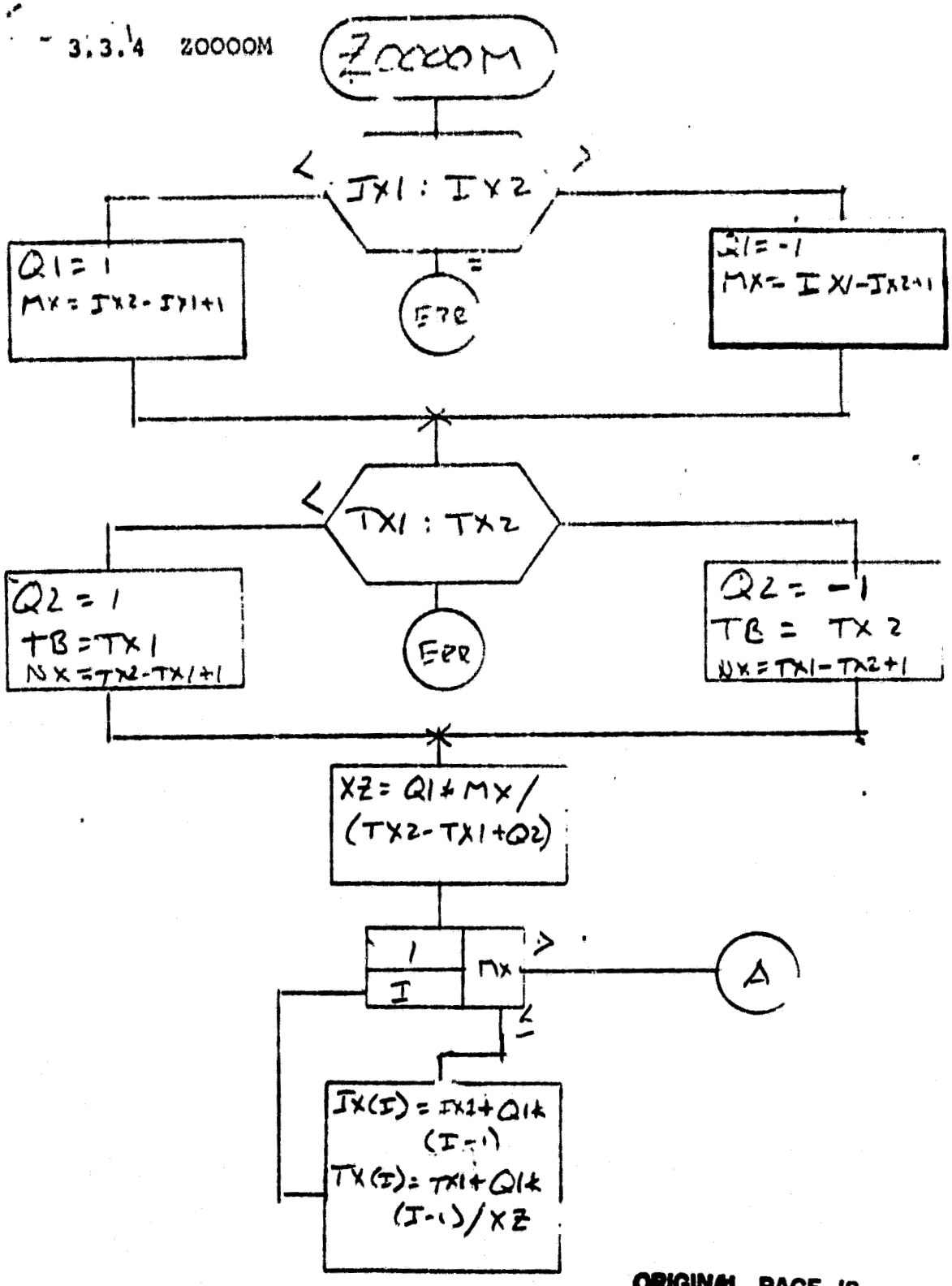

ORIGINAL PAGE IS
OF POOR QUALITY

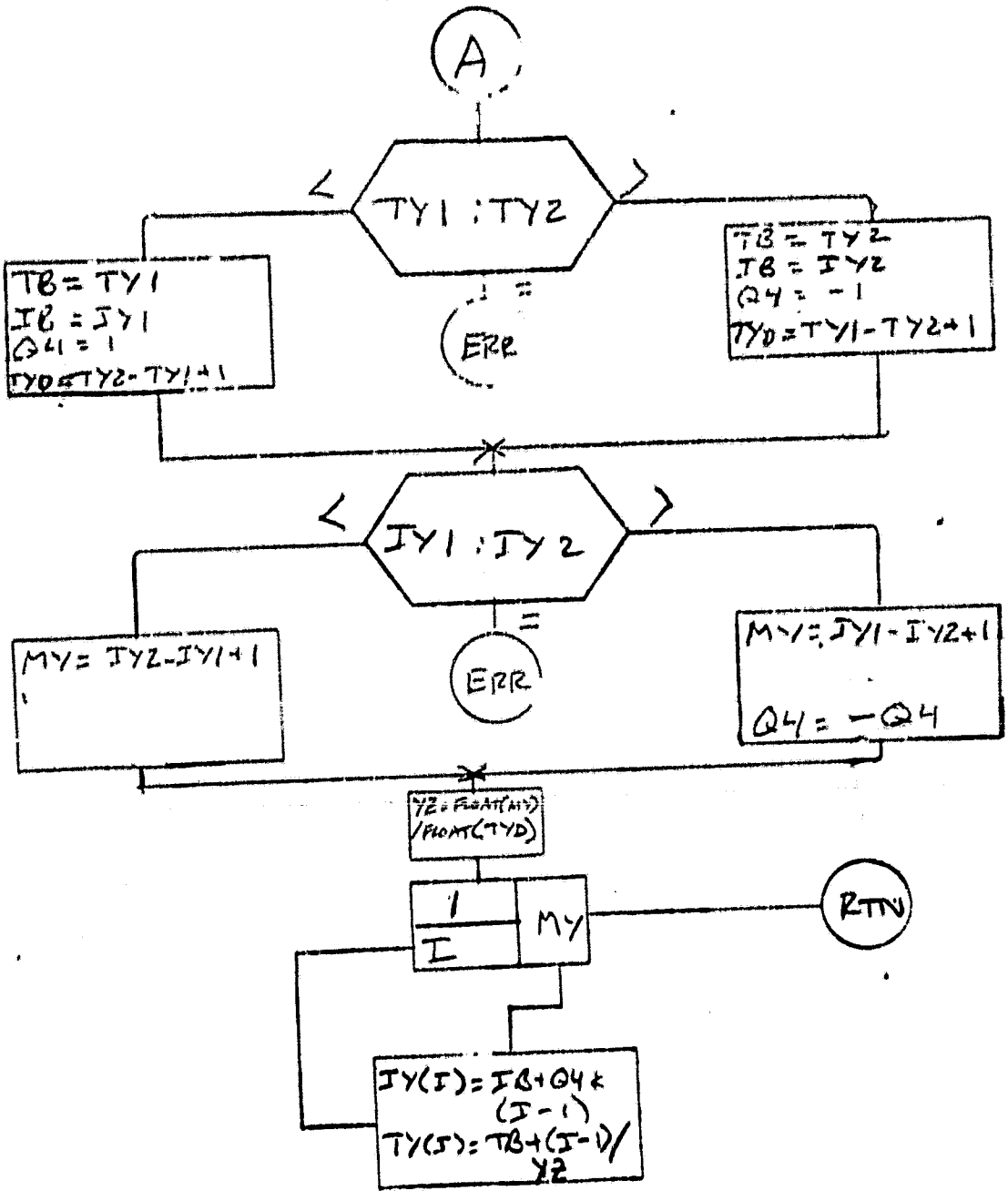
A
TY1 : TY2
<
>
=
TB = TY1
IB = JY1
Q4 = 1
TYD = TY2 - TY1 + 1
ERR
TB = TY2
IB = IY2
Q4 = -1
TYD = TY1 - TY2 + 1
JY1 : JY2
<
>
=
MY = IY2 - IY1 + 1
ERR
MY = JY1 - IY2 + 1
Q4 = -Q4
YZ = FLOAT(MY) / FLOAT(TYD)
1
I
MY
RTN
JY(I) = IB + Q4 * (I - 1)
TY(I) = TB + (I - 1) / YZ

3.3.5 HRPOS

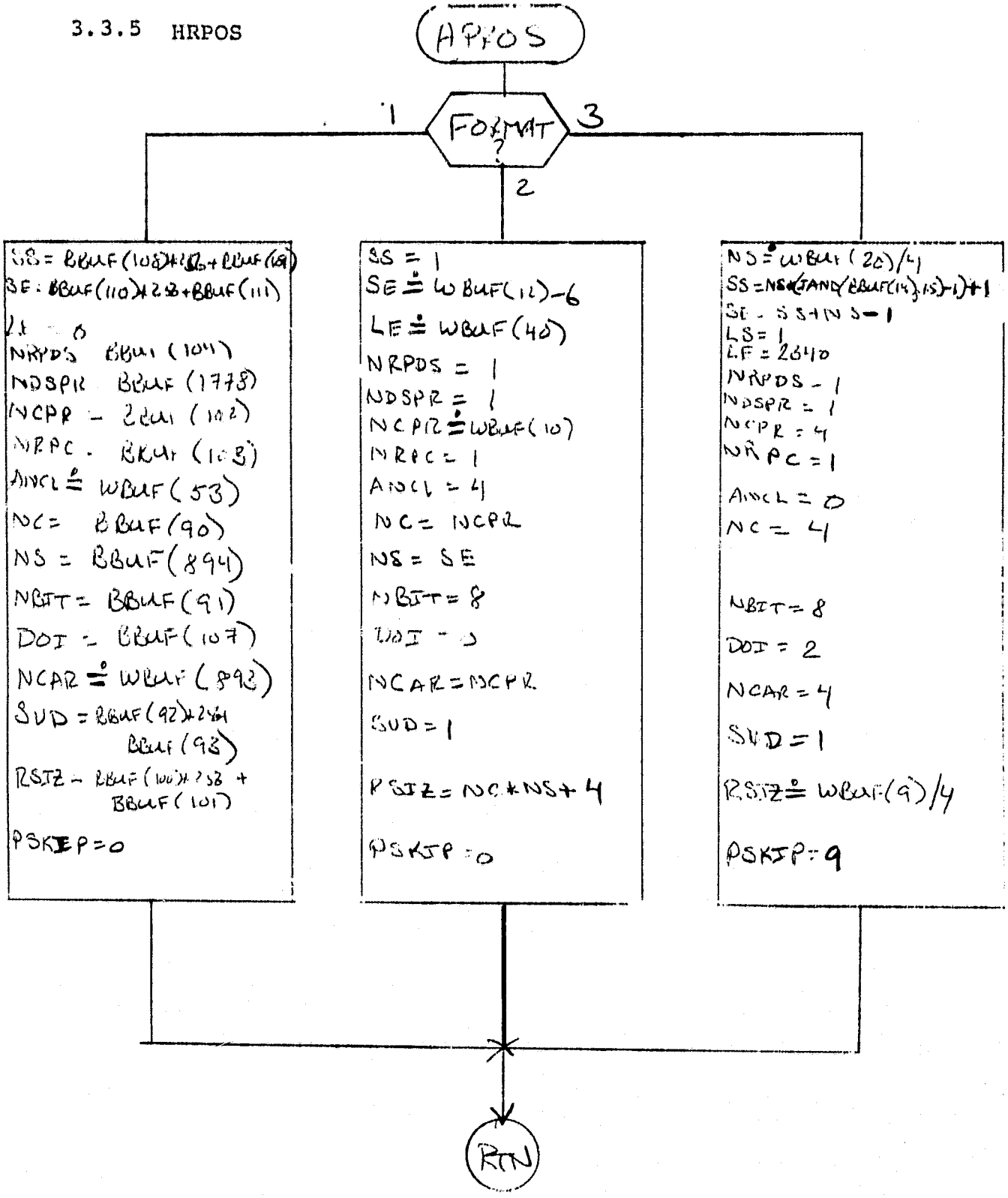

ORIGINAL PAGE IS
OF POOR QUALITY

3.3.6 GABI

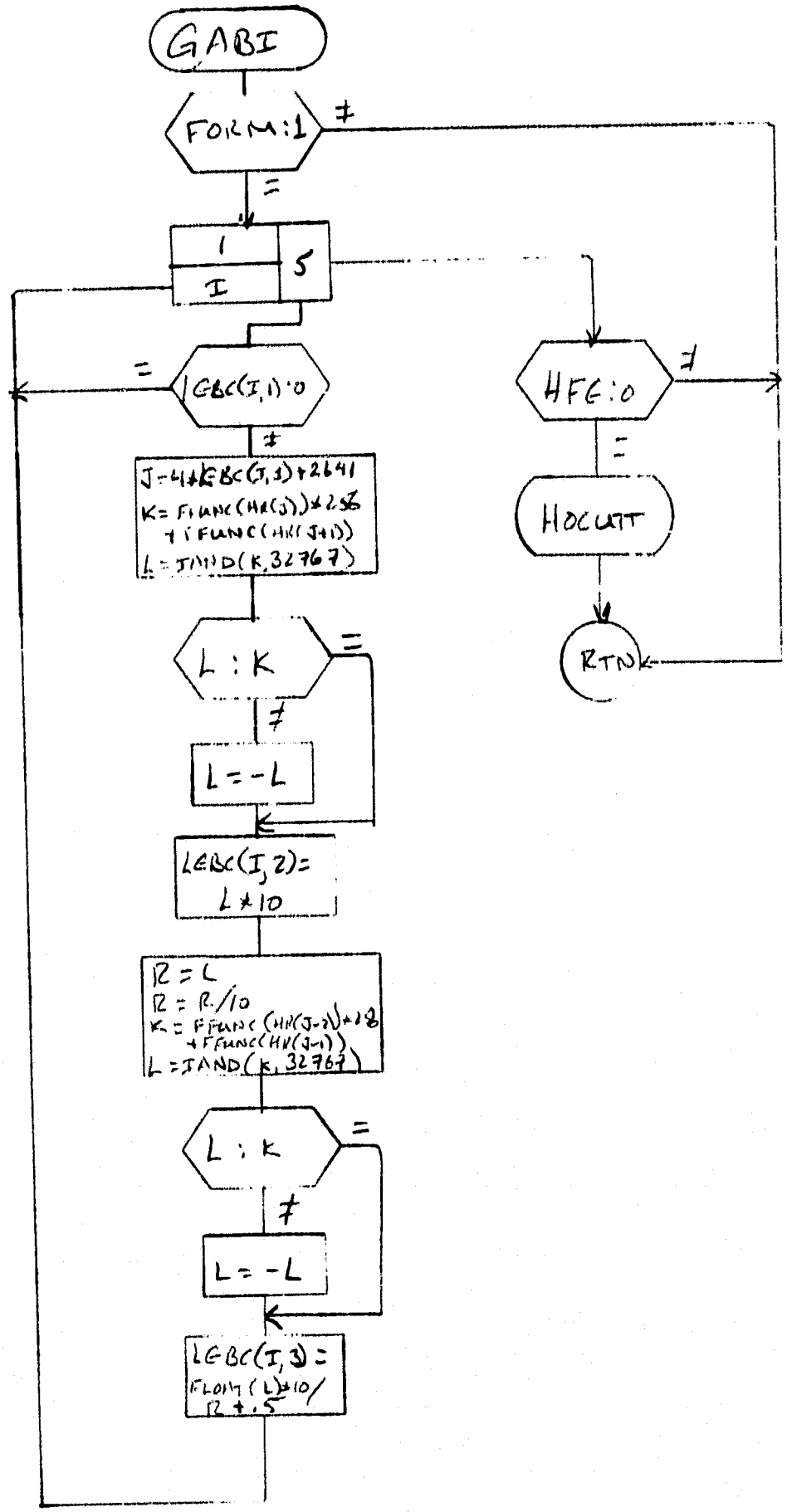
GABI
FORM:1
≠
=
1
I
5
=
GBC(I,1):0
≠
J=4+GBC(I,1)+2641
K=FFUNC(HR(J))*256
+FFUNC(HR(J+1))
L=IAND(K,32767)
L:K
=
≠
L=-L
LGBC(I,2)=
L*10
R=L
R=R/10
K=FFUNC(HR(J-2))*28
+FFUNC(HR(J-1))
L=IAND(K,32767)
L:K
=
≠
L=-L
LGBC(I,3)=
FLOAT(L)*10/
R+.5
HFG:0
≠
=
HOCUTT
RTN

3.3.7 HOCUTT

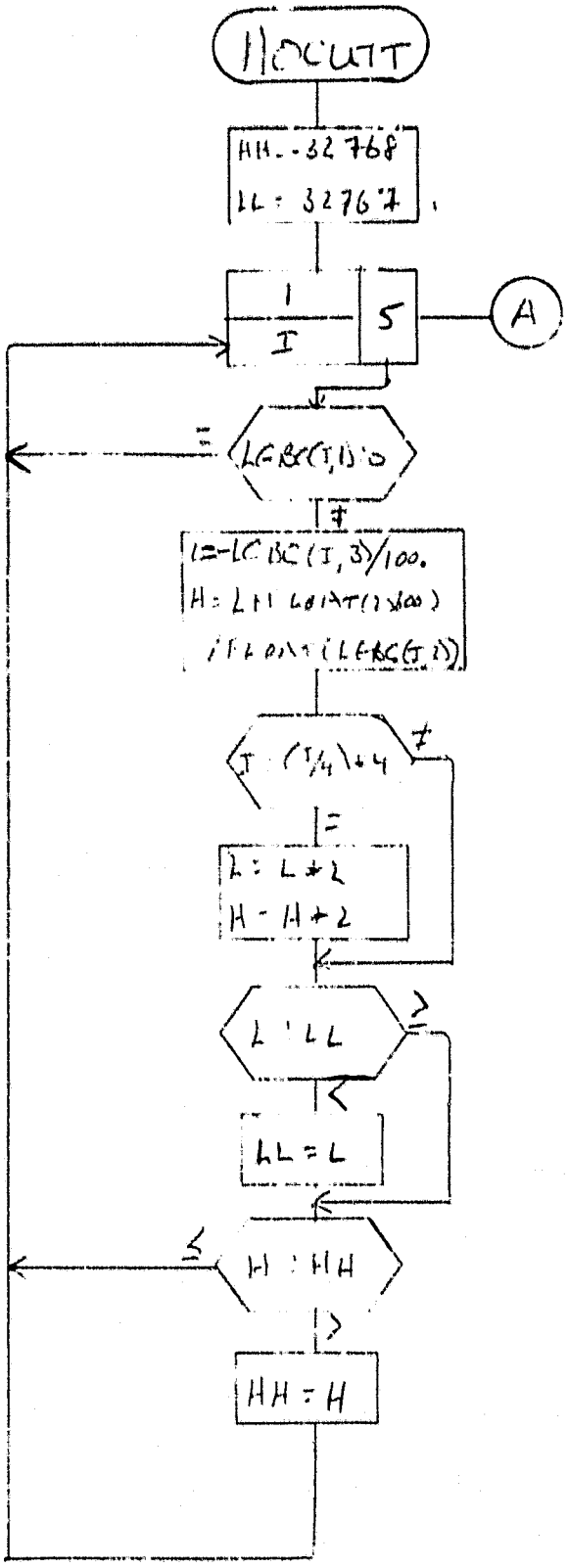
HOCUTT
HH=-32768
LL=32767
1
I
5
A
=
LGBC(I,1)=0
≠
L=LGBC(I,3)/100.
H=L+1
L=LGBC(I,1)
I=(I/4)*4
≠
=
L=L+2
H=H+2
L<LL
≥
LL=L
H≤HH
≤
>
HH=H

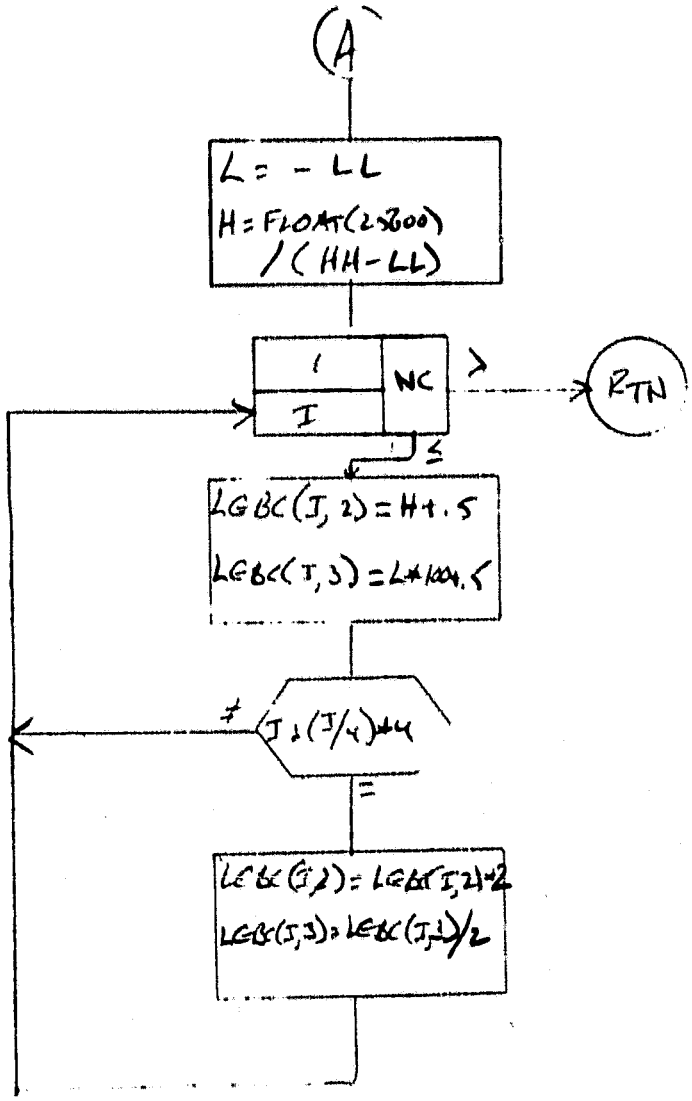
(A)
L = - LL
H = FLOAT(25600)
/ (HH-LL)
I
I
NC
>
RTN
≤
LGBC(I, 2) = H+.5
LGBC(I, 3) = L+100.5
≠
J = (J/4)*4
=
LGBC(J,2) = LGBC(I,2)+2
LGBC(J,3) = LGBC(J,2)/2

3.3.8 CRUNCH

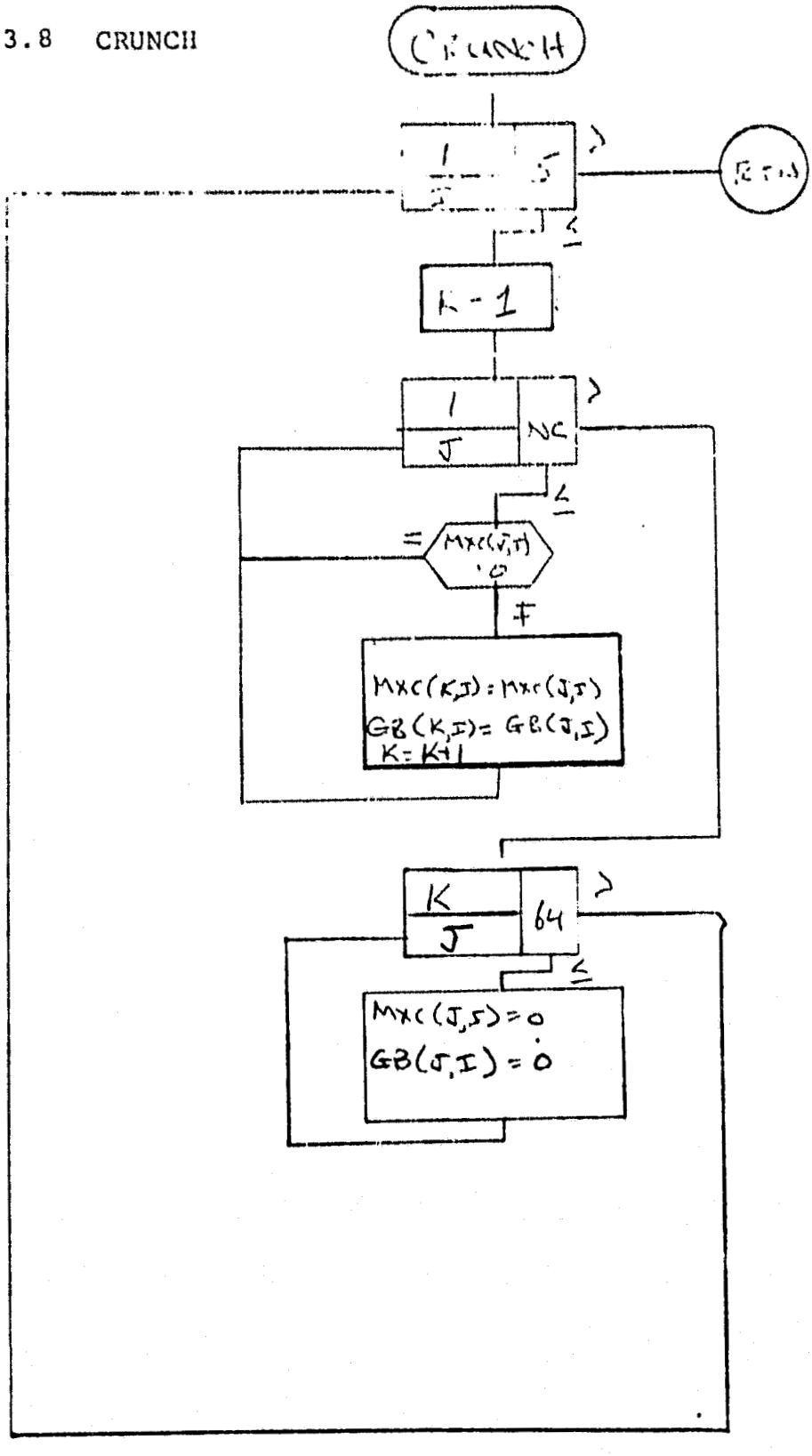
CRUNCH
1
J
>
RETURN
<
K - 1
1
J
NC
>
<
=
MXC(J,I)
0
F
MXC(K,I) = MXC(J,I)
GB(K,I) = GB(J,I)
K = K+1
K
J
64
>
<
MXC(J,I) = 0
GB(J,I) = 0

3.3.9 TCHLST

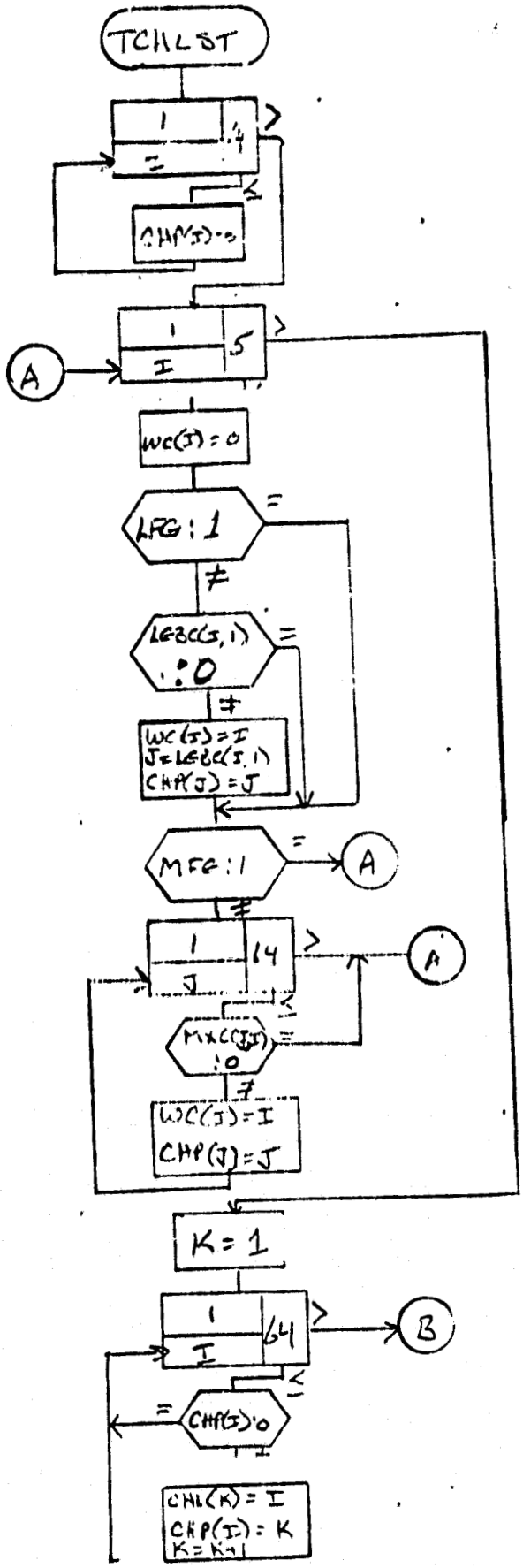

ORIGINAL PAGE IS
OF POOR QUALITY

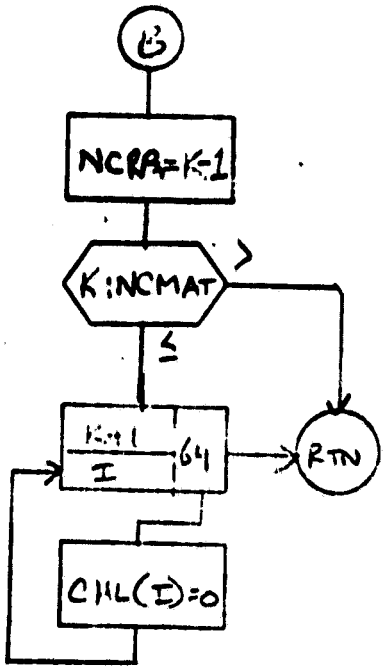
B
NCRA=K-1
K:NCMAT
>
≤
K+1
I
64
RTN
CHL(I)=0

3.3.11 GBCALC

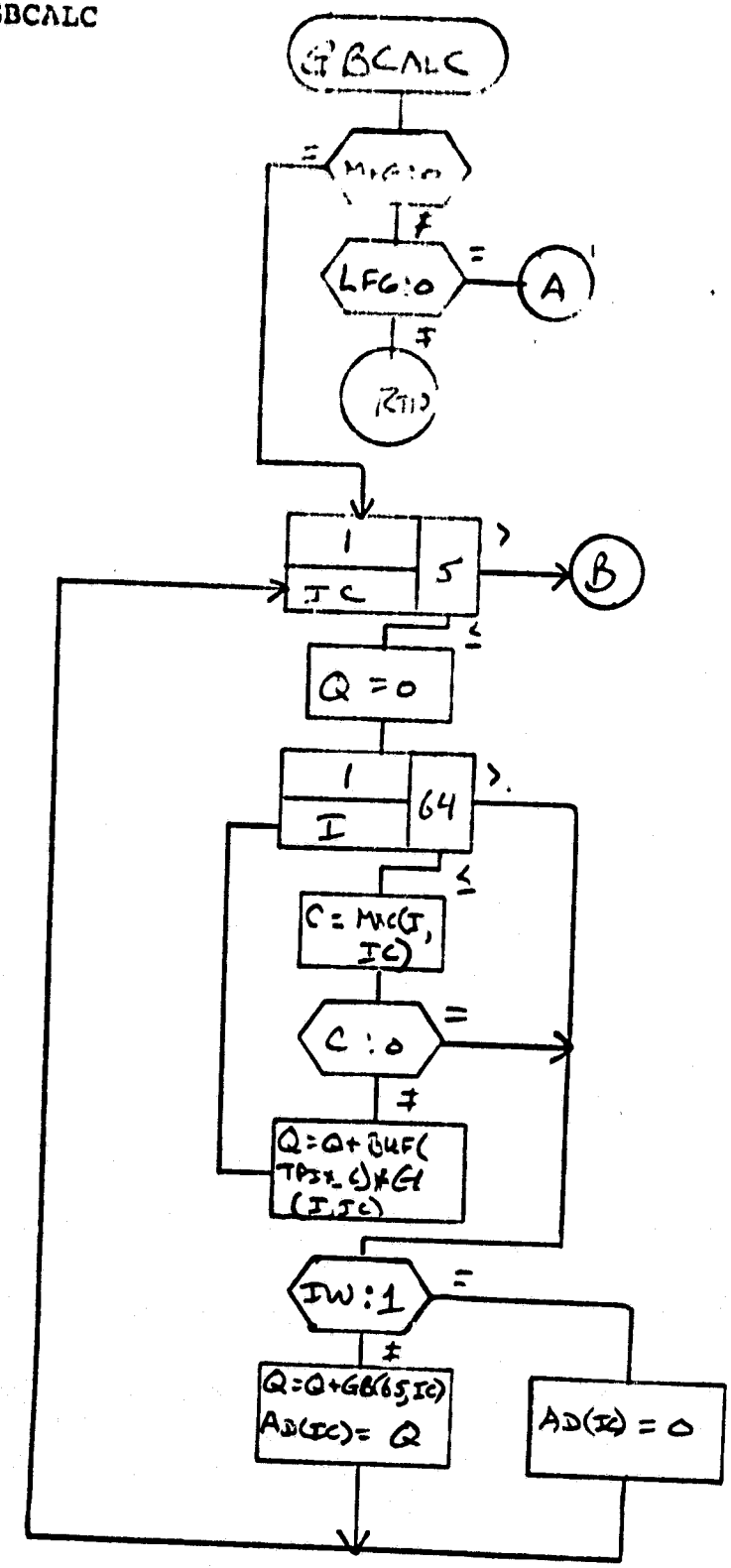
GBCALC
LFG:0
A
RTN
1
IC
5
B
Q = 0
1
I
64
C = MAC(I, IC)
C : 0
Q=Q+BUF(TPI*_C)*G1(I,IC)
IW:1
Q=Q+GB(65,IC)
AD(IC)= Q
AD(IC) = 0

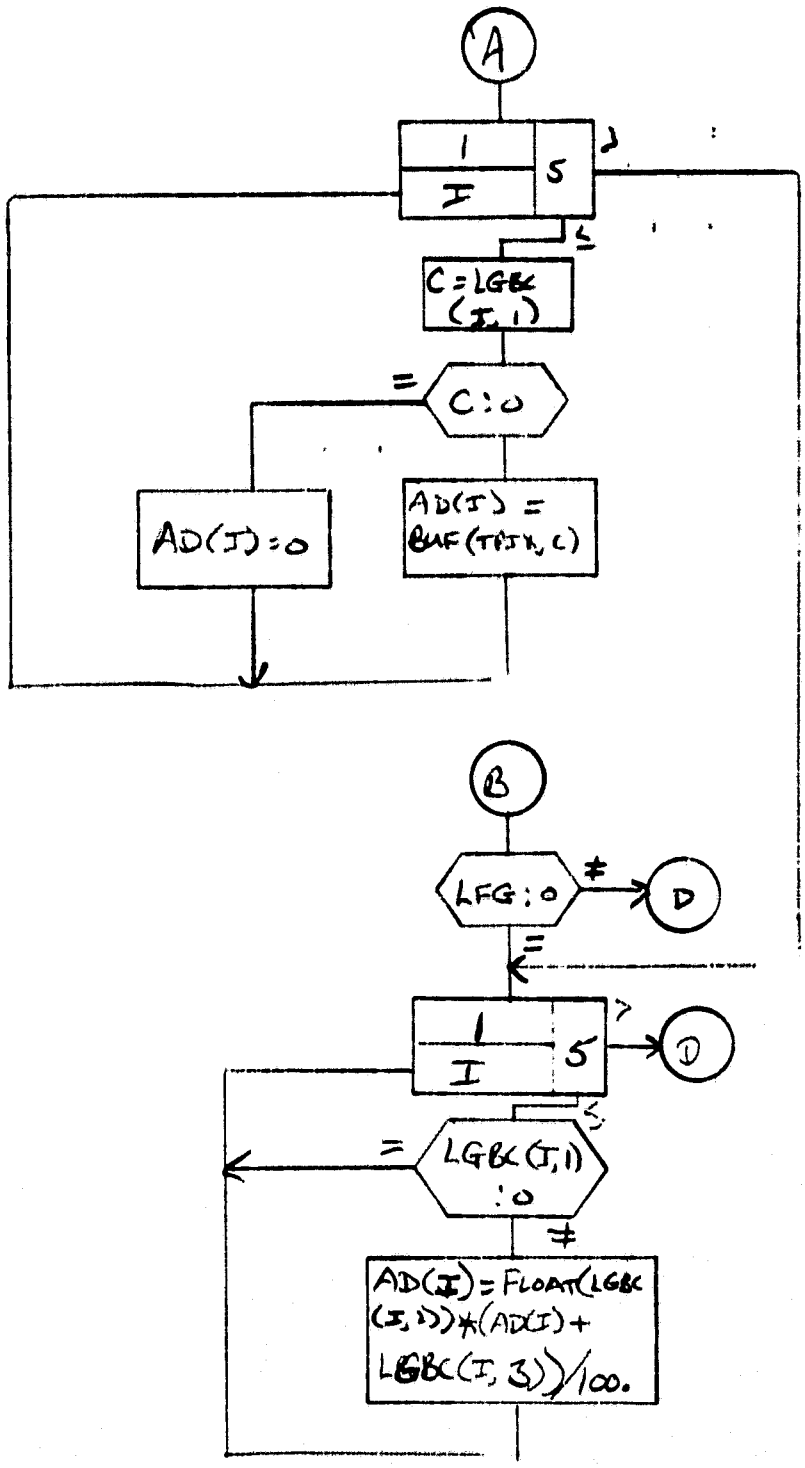
A
I
1
5
C = LGBC (I, 1)
=
C : 0
AD(I) : 0
AD(I) = BUF(TPTR, C)
B
LFG : 0
≠
D
=
I
1
5
7
D
=
LGBC(I,1) : 0
≠
AD(I) = FLOAT(LGBC (I, 1)) * (AD(I) + LGBC(I, 3)) / 100.

(3)

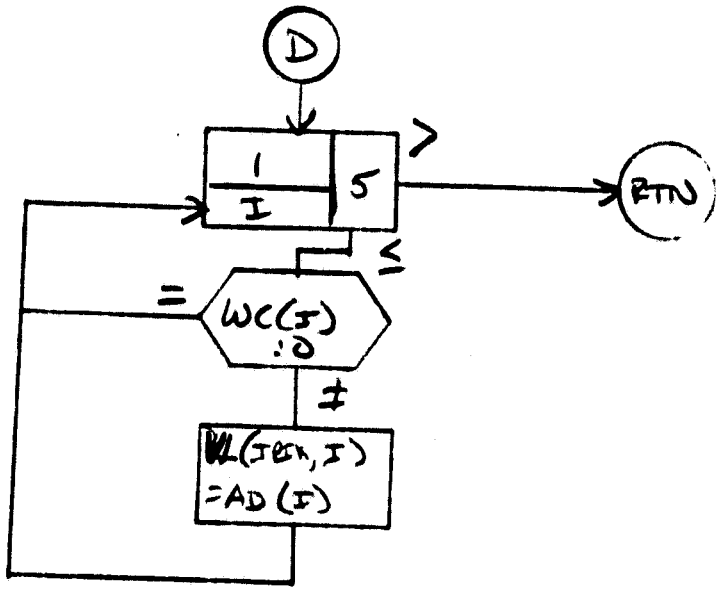

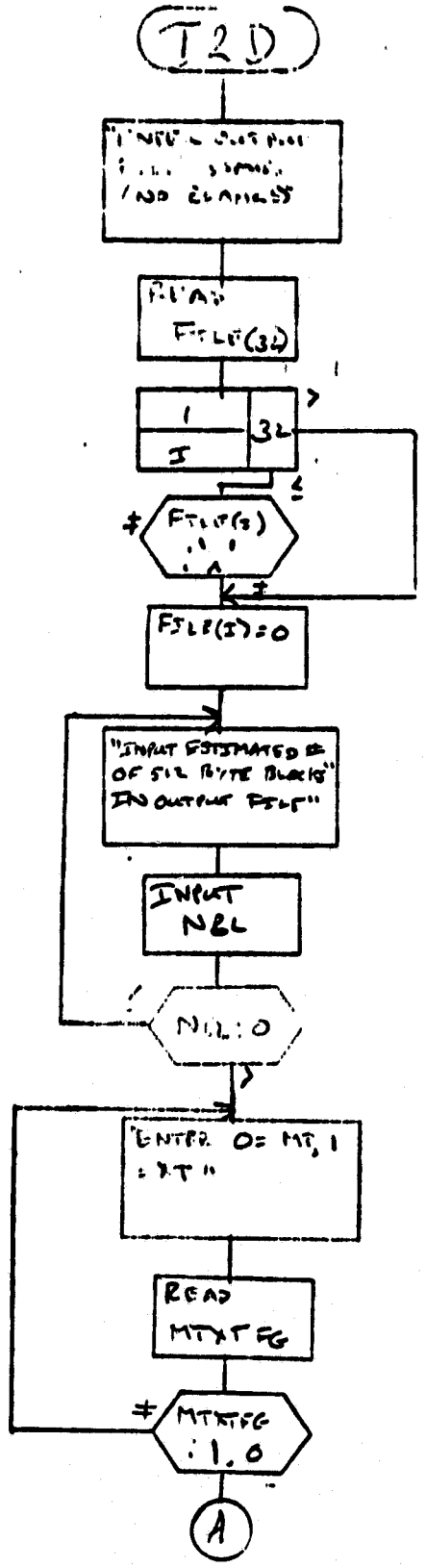
T2D
READ
FILE(32)
1
I
32
FILE(I)
FILE(I)=0
"INPUT ESTIMATED #
OF 512 BYTE BLOCKS"
IN OUTPUT FILE"
INPUT
NBL
NBL:0
ENTER 0= MT, 1
: XT "
READ
MTXTFG
MTXTFG
:1.0
A

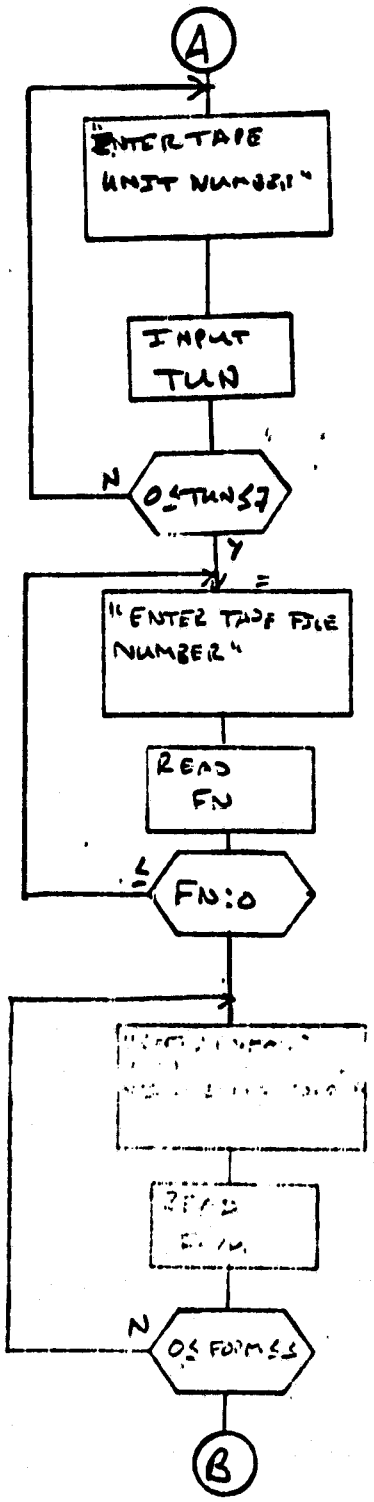

ORIGINAL PAGE IS OF POOR QUALITY

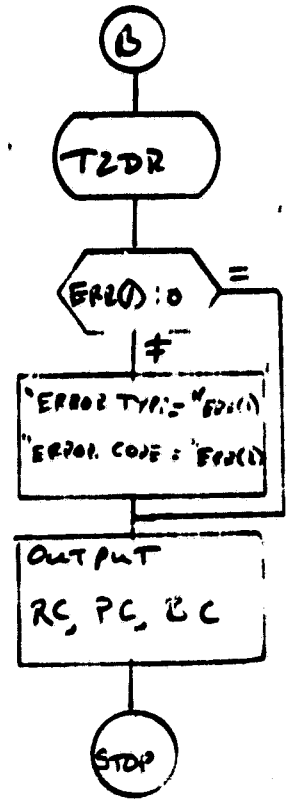
B
T2DR
ERR(1) : 0
=
≠
"ERROR TYPE:= "ERR(1)
"ERROR CODE : "ERR(1)
OUTPUT
RC, PC, EC
STOP

3.4 LISTINGS

Due to the size of the listings, they can be found on file in the DTL library.

APPENDIX A

COMMONS FCOM AND HCOM

FCOM

Name	Type	Size
FILE	B	33
NF	I	1
F11	I	1
MTXTFG	I	1
TUNIT	I	1
TUN	I	1
FLN	I	1
FORM	B	1
TX1	I	1
TY1	I	1
TX2	I	1
TY2	I	1
IX1	I	1
IY1	I	1
IX2	I	1
IY2	I	1
IX	I	512
TX	I	512
IY	I	512
TY	I	512
MX	I	1
MY	I	1
NCMAX	I	1
MGL	B	1
MGF	B	1
LGL	B	1
LGF	B	1
LGBC	I	5,2=10 words
HFL	B	1
HFG	B	1

Name	Type	Size
CHL	B	64
CHP	B	64
WC	B	5
MXC	B	64×5
LCB	R	65×5
LUN	I	1

HCOM

Name	Type	Size
SS	I	1
SE	I	1
LS	I	1
LE	I	1
NRPDS	I	1
NDSPR	I	1
NCPR	I	1
ANCL	I	1
NC	I	1
NS	I	1
NBIT	I	1
DOI	I	1
NCAR	I	1
SUD	I	1
RSIZ	I	1
PSKIP	I	1
HZJZ	I	1
CALP	I	1

APPENDIX B

FILES 11 FORMAT "F11"

RECORD FORMAT FOR Fl1 = 0 FILES

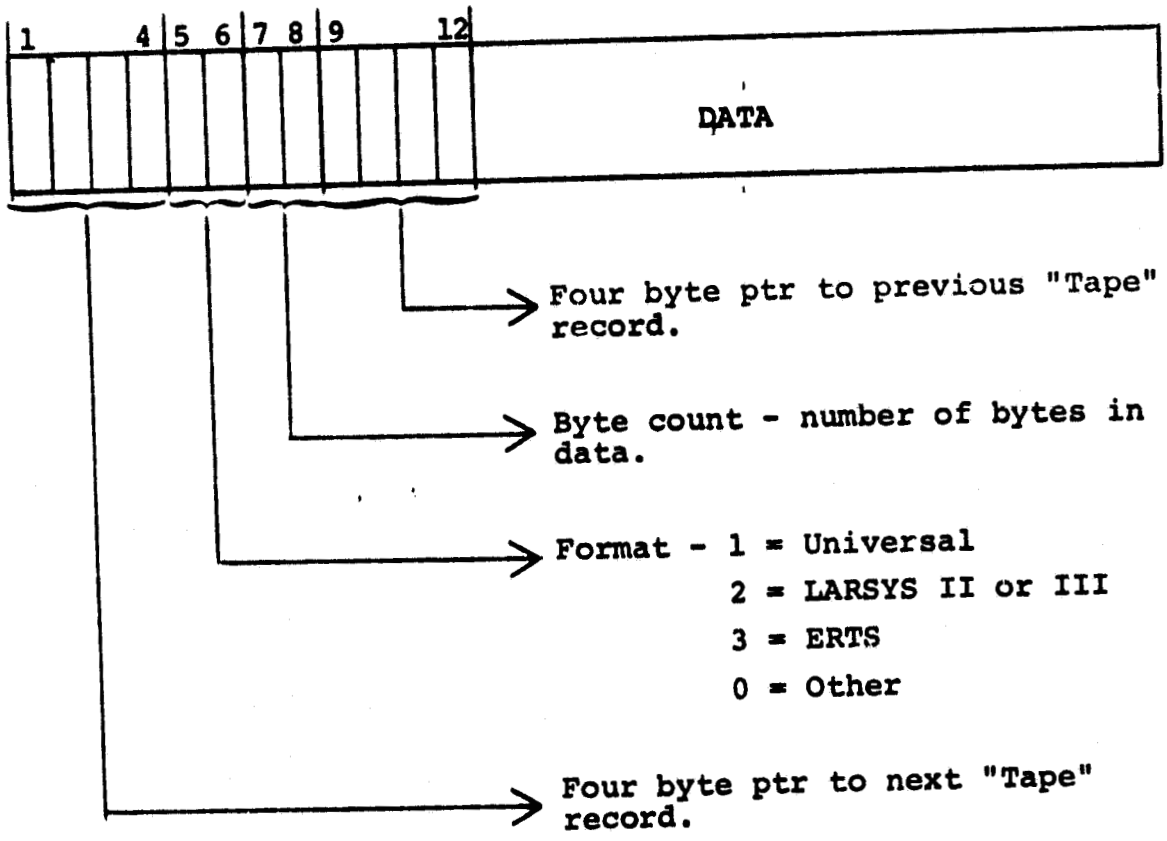

APPENDIX C

USER INSTRUCTIONS FOR THE CONSOLIDATED TAPE READ PROGRAM

(From the JSC Image-100 Users' Manual, Part II, Section 2.2)

4.1 CONSOLIDATED TAPE READ PROGRAM

4.1.1 DESCRIPTION

The Image-100 system, as delivered, could read ERTS-1 (Landsat) tapes but few others. As the system evolved, separate programs were developed to read Universal format tapes and LARSYSII tapes. As a result, several different sets of conventions evolved for reading of tapes, and there was much duplication of function in the several programs.

This program incorporates the best features of all of these programs and adds several new capabilities. It satisfies virtually all current requirements for reading data on tapes, and it also allows images to be read from disk storage into refresh memory. It is designed to be amplified as new formats appear. (As an example, Landsat-C and Landsat-D are expected to have formats that differ from current ERTS and Universal formats.)

This program allows the user to read images from tapes from two Bucode tape drives (800 bpi) and two Calcomp tape drives (800 or 1600 bpi); he may also read from files on disks.

Images may be in Universal, LARSYS, or ERTS format. If stored on the disk, it is in one of these formats but stored according to a Files-11 format, the internal format of the PDP 11/45 computer.

Coordinates of imagery data are normally accessed by X,Y coordinates in which X refers to sample number and Y refers to line number. Data are normally retrieved on the tape from the upper left corner (X1,Y1) to the lower right corner (X2,Y2) of a rectangular box and stored in refresh memory according to two such pairs of coordinates, CRT X1,Y1 and CRT X2,Y2 (normally the upper left and lower right corners). The data are linearly scaled to fit into refresh memory, by repetition of pixels for magnification or by skipping pixels for reducing. The only restriction is that X1 must not be equal to X2 for tape (or disk) coordinates, as well as for refresh memory coordinates. This allows complete flexibility in reversing images. This is also true for values of Y.

Offline transformations can be applied to the incoming data, in the form of gains and biases for each channel. They may also be applied to furnish full transformation matrices.

Data can also be slipped laterally according to a rotation factor. This compensates for apparent east-west motion of a polar-orbiting satellite caused by the rotation of the Earth.

From the perspective of the analysis, the program flows as shown in figure 2.2-1. Note that the flow must pass through "linear transformation" or matrix transformation or both. If it bypasses both, no image will be transmitted. (Zeros will be placed in the refresh memory).

4.1.2 PROCEDURE

4.1.2.1 Introduction

The Consolidated Tape Read Program has replaced the individual programs which were formerly used to read ERTS, LARSYS, and Universal tapes. All features of these programs have been maintained, and many more have been added. It is now possible to store images on disk and read them later with the Tape Read Program. It is possible to read the images with linear or matrix gain and bias inputs or a combination of both. An important feature of the program is that it is possible to backstep through the program to correct erroneous inputs. Another important feature of this program is the ability to store frequently used responses or complex matrix input parameters on a disk file to simplify the tape read input.

4.1.2.2 Location of Imagery Data

The program (fig. 2.2-2) will read data in Universal, ERTS, or LARSYS formats from tape or disk files.

1. Program requests IMAGERY DATA LOCATION - MT0:.

2. Acceptable responses are MT0, MT1, MT4, and MT5 or XT0, XT1, XT4, and XT5 for tapes, or the UIC and the name of a previously stored file on the disk. Default is MT0. An acceptable file response would be [100,2] IMAGIN CR.

3. If from tape, have operator mount tape.

4. If input is from tape, system requests: TAPE FILE NO (1-N)-1.

5. Default is 1. However, if the analyst wishes to display one file of a multifile tape, he types the file number followed by CR.

6. Program requests:

```
SPECIFY INPUT FORMAT
1 = Universal
2 = LARSYS
3 = ERTS
1 :
```

7. The analyst may enter CR to accept the Universal format or type a 2 or 3 followed by CR for LARSYS or ERTS (Landsat-1 or Landsat-2) format.

8. Program requests: SAVE HEADER FOR FUTURE USAGE (Y/N) -N: A response of Y will store a file, named HEADER.DAT, with data from the tape header on the system disk. This file can later be read and displayed by a Header Read Program.

9. Analyst types Y or N.

10. The computer will then display data from the header indicating the starting line and pixel values, the number of pixels on each line, and the number of tape channels contained on the tape.

11. Then the system requests: ENTER IMAGERY X1,Y1 - 1,1:.

12. The user should enter the first pixel which he wishes to display and the first line which he wishes to display or accept the default input which is the starting pixel and line of the tape. Illustrated defaults are only for LACIE segments. More appropriate defaults will be presented for other cases. A typical response would be 20,20 CR.

13. System requests: ENTER IMAGERY X2,Y2 - 196,117:.

14. The user should enter the last pixel which he wishes to display and the last line which he wishes to display or accept the default. A typical response might be 500,500 CR.

15. At this point, the computer will compute and display the maximum number of channels which can be processed in a matrix transform. This value is dependent upon the line length, tape format, and number of channels in an image.

4.1.2.3 Parameters for the Input of Imagery Data

The program (fig. 2.2-2) will store the image into any portion of a 512 by 512 area (although some lines at the edges of the screen will not be visible).

1. System requests: ENTER CRT X1,Y1 - 1,21:

2. The user enters the CRT pixel and line values ($0 \leq X \leq 511$) for the point where he wishes to display the starting pixel and line from step 5 of section 2.2.2.2. As usual, the user may accept default values. Note that the 20

lines are not visible on the screen. A typical response would be 1,21 CR.

3. System requests: ENTER CRT X2,Y2 - 392,254:

4. The user types the CRT pixel and line values (0<X<511) for the point where he wishes to display the ending pixel and line from step 13 of section 2.2.2.2. If the user accepts the default values for both X1,Y1 and X2,Y2 for a LACIE segment, he will store the segment with two repeats of each line and pixel in an area bounded by CRT lines 21 to 254 and CRT pixels 1 to 392.

4.1.2.3.1 Matrix Transform

The analyst can apply an affine transformation in the following way to each pixel (vector) of incoming data (fig. 2.2-3):

$$\vec{P}_{new} = M\vec{P}_{old} + \vec{b}$$

where

$\vec{P}$ = the new and old values for each pixel.

M = a transformation matrix (5 × 64, 5 being the maximum number of channels or components of the pixel vectors in the Image-100 refresh memory).

$\vec{b}$ = a bias vector.

Assume the following matrix and bias vector.

$$M = \begin{vmatrix} 433 & 622 & 586 & 264 & 0 \\ 0 & 2 & 0 & 0 & 0 \\ 0 & 0 & 2 & 0 & 0 \\ 0 & 0 & 0 & 4 & 0 \\ 0 & 0 & 0 & 0 & 0 \end{vmatrix} \quad b = \begin{vmatrix} 0 \\ 0 \\ 0 \\ 0 \\ 0 \end{vmatrix}$$

The analyst furnishes the data in row 1 in response to a request for gains and bias for CRT channel 1. Figure 2.2-3 illustrates the interactive operations needed to introduce M and b. Note that zero elements are assumed and therefore do not need to be entered.

1. System requests: DO YOU WANT A MATRIX GAIN TRANSFORM (Y/N) - N: (See last line of figure 2.2-2.)

2. Analyst types Y CR.

3. System requests: ENTER IMAGERY CHANNEL, GAIN FOR CRT CHANNEL 1, TERMINATE WITH 0, BIAS.

4. Analyst enters all nonzero gains as integers or numbers with decimal points. Then he types 0, followed by the bias value, and then CR. To code the first row of the matrix illustrated above he would type:

1	433			1	433.
2	622			2	622.
3	536		or	3	536.
4	264			4	264.
0	0	CR		0	0.

5. System repeats step 3, four times, and the analyst replies each time.

6. System then asks if a linear transformation is desired.

7. If a matrix transformation has been specified, no linear transformation will be needed. If no matrix is given, one will be needed. If the analyst wishes to redirect the output channels of a standard matrix, he may do so with the linear transform. For example, he may put channel 2 (brightness) of the Kauth-transformed image into channel 4 of the refresh memory in this way. (See section 2.2.2.3.3 for general instructions on the linear transformation.)

8. System requests: ROTATION FACTOR ø.øøøøø:.

9. The analyst may furnish a rotation factor to offset the rotation of the Earth between scan lines. For small areas such as LACIE segments (5 by 6 nautical miles), the correction is negligible and most users will enter a CR and accept the default value of 0.

10. At this point, the screen will clear and the system will recapitulate all display parameters (section 2.2.2.4).

4.1.2.3.2 Linear Transformation

The user has a choice of several preprogrammed linear transformations to select from, or he may input bias and gain values to perform the transformation (fig. 2.2-4). The bias and gain values will be used in the formula for each component of the pixel vector.

$$\vec{Y} = A\vec{X} + AB$$
$$= A\,(\vec{X} + \vec{B})$$

where

Y = the computed radiance level

X = the tape radiance level

A = gain

B = bias

Note that the equation is not Y = AX + B. If Y is less than zero, it is set to zero. If it is greater than 255, it is set to 255.

This is essentially identical to the matrix transform in the following sense. If M is the following matrix:

$$\begin{vmatrix} gain_1 & 0 & 0 & 0 & 0 \\ 0 & gain_2 & 0 & 0 & 0 \\ 0 & 0 & gain_3 & 0 & 0 \\ 0 & 0 & 0 & gain_4 & 0 \\ 0 & 0 & 0 & 0 & gain_5 \end{vmatrix}$$

then

$$\vec{P}_{new} = M\vec{P} + M\vec{b}$$
$$= M\,(\vec{P} + \vec{b})$$

Again, note that it is not $\vec{P} = M\vec{P} + \vec{b}$ as in the matrix transform.

1. System states DO YOU DESIRE A LINEAR TRANSFORM (Y)ES/(N)O/(P)REVIOUS/(T)APE HEADER, - Y:.

2. A response of Y allows the analyst to specify gains and biases; N bypasses this section, passing control to step 6. If he types P, the program recovers the gains and biases previously used, applies them, and proceeds to step 6. If he types T, gains and biases in the Universal header record are recovered and applied automatically (steps 8 to 12), but such data are found only on tapes of LACIE segments. Note that if a second tape image is read without exiting the program; the biases, gains, and channel assignments will be retained in memory and recovered on use of the P-option. Note also that the initial defaults read all channels into memory with no bias, with a gain of 2 for channels 1, 2, and 3 and a gain of 4 for use with Landsat.

3. If the analyst types Y and CR, then the stored bias, gain, and channel assignments for each channel will be displayed and the user will be allowed to accept or make changes to each. Gains and biases may be integer or decimal numbers. The system requests:

   ENTER IMAGERY CHANNEL, GAIN, BIAS FOR CRT CHANNEL 1
   1 , 2 , ø:

4. At this point, the user may accept the values by a CR or input other values followed by a CR. (A typical response might be 2, 4., 3 CR.)

5. The computer will then repeat step 3 for channels 2 through 5, and the analyst will reply as in step 4. A zero for the imagery channel will signal that nothing is to be done to the CRT channel.

6. The computer then requests a rotation factor: ROTATION FACTOR ø.øøøøø:.

7. Analyst responds. (See step 9 of section 2.2.2.3.1.) The system then recapitulates (section 2.? 2.4).

8. If the response to the query in step 1 is a T, followed by a CR, the computer will use the bias and scale factors computed by Goddard and stored on the header of Universal tapes to display the image. These bias and scale factors will expand the range of data on each channel from 0 to 255. This is identical to the method currently used to generate film products for LACIE. However, this method distorts the colors of the image.

   An alternative routine has been provided in the program which eliminates this color distortion. This routine will compute a single gain and bias for all channels. It should only be used when loading data from Landsat bands 4, 5, 6, and 7 into CRT channels 1, 2, 3, and 4, respectively, because the routine assigns the same bias and scale factors to CRT channels 1, 2, and 3 but changes the bias scale factors for CRT channel 4 to compensate for the difference in data range of Landsat band 7 (0 to 63 instead of 0 to 127). The routine is called by a response of Y, followed by a CR, to the query:

   USE HOCUTTS MODIFICATION (Y/N) - N:

9. Entering a CR will bypass this routine and the bias and scale factors will be computed individually for each channel.

10. In either case, the computer will request an imagery channel assignment for each channel:

    ENTER IMAGERY CHANNEL FOR CRT CHANNEL 1 - 1:

11. The user has the option of skipping this channel (no data will be loaded into the channel on this tape read) by entering a 0, entering another imagery channel number, or accepting the default value by entering a CR.

12. The computer will then request a rotation factor:

    ROTATION FACTOR Ø.ØØØØØ:

    The user responds as usual. At this point, the screen will clear and the system will recapitulate all display parameters (section 2.2.2.4).

4.1.2.3.3 Combined Matrix and Linear Transform

The matrix and linear transformations operate independently; therefore, it is possible to use them together. Although the combined transformation takes place pixel by pixel, it may be easier to understand how the transformation is accomplished if it is assumed that all data values X_i are transformed into data values Y_i by the matrix transform and that the data values Y^i are then transformed into data values Z_i by the linear transformation, which are then stored in the refresh memory and displayed on the screen (fig. 2.2-5).

If the user enters a matrix transform and a linear transform for the same CRT channel, the result will be a combined transformation. If he enters a matrix transform for a specific CRT channel and then a 0 gain for the same channel (in the linear transform), the result will be that all zeros will be loaded into that channel. The user may use a combined matrix and linear transformation to change channel locations of data produced by the matrix transformation.

4.1.2.4 Recapitulation of All Display Parameters

After the user has input all the display parameters, the computer will clear the screen and display these parameters and request: PROCEED? (Y/N). (See fig. 2.2-6.) If the parameters are satisfactory, a Y, followed by a CR, will start the tape read.

If the user wishes to change any of these parameters, he should type a B, followed by a CR. This will cause the computer to backstep to the previous query. By continuing to input B and Cr, the program can be backstepped past the unsatisfactory parameter. This value can then be changed, and the program can be stepped forward by successive CR's until the recapitulation again appears on the screen. A Y, followed by a CR, will start the tape read with the corrected parameters.

4.1.2.5 Input of Files from Cards

All inputs to this program may be generated on cards, placed in a card image file, and then input to the program command. There are two methods of doing this, a simple inflexible one and a slightly complicated but very flexible one.

4.1.2.5.1 Simple Method

When the program asks for an input, the user may type "@FILE". The program will then cease requesting data from the user but will input cards from the file FILE to satisfy its needs. When the file is empty, the program resumes requesting inputs from the keyboard. The input cards must be formatted EXACTLY as if they were typed in by the user. Comment cards may be used, as directed below. Figures 2.2-7 through 2.2-13 present some examples of files prepared in this way.

4.1.2.5.2 Flexible Method

In this method, the user has great flexibility of file usage for input. There are four commands which can be used.

Command 1

The first command is =F#,FILE. Here # is a Fortran line number not equal to 1, 2, 3, 4, 5, or 6. The user will normally want to restrict his usage to 7, 8, or 9. File is the input file desired. The effect of this command is to open the Logical Unit Number (LUN), attach it to the FILE, and direct the program to begin input by commands from file. This is referred to as OPENING the file.

Command 2

The second command is the reverse of the proceding; that is, to close an input file. When a file is closed, the program should be (1) finished with it and (2) not reading from it. If the program is reading from LUN 7, the user should not attempt to close LUN 7. Such behavior will cause a disaster. The command is =K#. Note that the file

name is not needed, only the LUN. After executing this command, the program returns to requesting inputs from the current LUN.

Command 3

This command tells the program to change from the LUN currently being used to another which is already open. The file on the old LUN is not disturbed in any way, so that further inputs may be obtained from it if desired. For example, File 1 may be defined as several command cards, followed by a =F6 and followed by several more commands. It looks like this:

```
.
.
.
.
F6
.
.
.
.
.
.
.
=F6
```

To access this file takes the following sequence of user commands:

```
=F7,FILE 1          Return at first =F6; input some commands.
.
.
.
=F7                 Start reading rest of cards, return at
.                   second =F6, and input some commands.
.
.
=K7                 Close file on LUN 7; no further inputs.
```

Command 4

Each time control is switched from one LUN to another, the program pushes the old LUN into a stack. This program retrieves the top LUN on the stack, pops it off, and resumes input from the new LUN. Thus, the command functions like a Fortran return statement. This command is =K. Note that there are no LUN's in this command, as it is retrieved from the stack. In the above example, this command could be used in place of the F6.

Comment Card

Any card image starting with a colon (:) is printed on T1 and another card is read from the current LUN.

Examples are presented in figures 2.2-7 through 2.2-13. To call this sequence of commands, the user types =F7,TEST CMD. If the user first uses T2D to copy a tape on MT0: to a file called IMAGE1.T2D and leaves the tape mounted on MT0:, he will see a four-part image on the screen in which each part is displayed in a different way.

4.1.2.6 Procedure to Use a File Stored on Disk for Input Parameters

All or part of the answers to the tape read queries may be stored on a named disk file by the PIP Utility Program. The input file should be a card deck, prepared as outlined in the previous section.

A card deck is read into a file in the following way:

```
MCR> PIP
PIP> "FILENAME"=CR:
PIP> Control Z
```

To use the same data, the user types =F7,[UIC]FILENAME and CR at any point where he would otherwise respond to a request from the program. The UIC is the one where the user stored the file and FILENAME is the name under which it was stored. An example of such a use can be seen in figure 2.2-14.

4.1.2.7 Kauth Transformation

Because the Kauth transformation has proved valuable for a wide variety of remote sensing problems, Kauth transformation matrices are maintained on permanent file on the system disk as KAUTH1 and KAUTH2 for use with Landsat-1 and Landsat-2. In addition, the soil number (greenness of soil) is included on Universal headers of LACIE segment tapes, though normally not on others.

Figure 2.2-14 demonstrates the application of the Kauth transform to a LACIE segment, recovery of soil number from header, scaling by use of gains and biases, and assignment of green number (channel 1) and brightness (channel 2) to channels 4 and 3 of the Image-100 refresh memory. Note that all printing is suppressed during entrance of matrix coefficients. Only comments in the KAUTH2 file are printed. (The KAUTH2 file is shown in figure 2.2-13.)

4.1.3 CONTINGENCIES

This is a complex program. In its most fundamental use, it will function very smoothly with a minimum of user interaction. In its most esoteric use, its operation can become nearly incomprehensible to the ordinary user.

Complications can arise because a matrix transformation and then a linear transformation can be applied sequentially to the same data. Since a single matrix transformation could simulate both operations, the double operation might have been implicitly prohibited by the program. However, it is allowed because circumstances can arise in which it is convenient for the user, such as rescaling a transformed channel of data, which allows the use of a channel of data produced in the matrix transformation to be replaced by some other data and the reassignment of channels.

It needs to be noted that gains and biases must be specified or a matrix transformation must be specified. If neither is given, only zero data will be placed in refresh memory. (This feature may be used to introduce zeros into specified positions in an image.)

The program has very convenient default values for location of images. The values illustrated here have been typical of LACIE segments. In the general case, Tape X1 and Tape X2 are set to the first sample and line on the tape. Tape X2 is set at the last sample, and Tape Y2 is set at Tape Y1 + 511. For the general case, CRT values are set to fill the entire screen (0,0 and 511,511). As a result, the analyst may always display an image by using defaults (but the image may be distorted).

In general, a value given in response to a request from the system, is maintained as default. This continues until the program is exited. In a typical case, the user may reply with Y and CR the first time and select the channels, gains, and biases. The next time he enters this program, the default value will be P, so that typing CR alone will automatically use the previous values; Y and CR will require that new values be introduced.