https://ntrs.nasa.gov/search.jsp?R=19800020284 2020-03-21T16:52:45+00:00Z

N O T I C E

THIS DOCUMENT HAS BEEN REPRODUCED FROM MICROFICHE. ALTHOUGH IT IS RECOGNIZED THAT CERTAIN PORTIONS ARE ILLEGIBLE, IT IS BEING RELEASED IN THE INTEREST OF MAKING AVAILABLE AS MUCH INFORMATION AS POSSIBLE

"Made available under NASA sponsorship in the interest of early and wide dissemination of Earth Resources Survey Program information and without liability for any use made thereof."

E80-10184

E78-10725 NMF

JSC- 13822

NASA CR-
160638

"AS-BUILT" DESIGN SPECIFICATION
FOR
PRODUCTION FILM CONVERTER GAINS AND BIASES PROGRAM
(PFCGAB)

Job Order 71-695

(TIRF 76-0081)

(E80-10184) AS-BUILT DESIGN SPECIFICATION FOR PRODUCTION FILM CONVERTER GAINS AND BIASES PROGRAM (PFCGAB) (Lockheed Electronics Co.) 182 p HC A09/MF A01 CSCL 05B G3/43

N80-28785

Unclas
00184

Prepared By

Lockheed Electronics Company, Inc.
Systems and Services Division
Houston, Texas

Contract NAS 9-15200

For

EARTH OBSERVATIONS DIVISION
SCIENCE AND APPLICATIONS DIRECTORATE

National Aeronautics and Space Administration

LYNDON B. JOHNSON SPACE CENTER

Houston, Texas

November 1977

LEC- 11678

JSC-13822

"AS-BUILT" DESIGN SPECIFICATION
FOR
PRODUCTION FILM CONVERTER GAINS AND BIASES PROGRAM
(PFCGAB)

Job Order 71-695

(TIRF 76-0081)

Prepared By

C. T. Gardner
Lockheed Electronics Company, Inc.

APPROVED BY

J. M. Allred, Supervisor
Physical Sciences Section

P. L. Krumm, Supervisor
Applications Software Section

Prepared By
Lockheed Electronics Company, Inc.
For
Earth Observations Division
Science and Applications Directorate

NATIONAL AERONAUTICS AND SPACE ADMINISTRATION
LYNDON B. JOHNSON SPACE CENTER
HOUSTON, TEXAS

November 1977

LEC-11678

CONTENTS

Section		Page
1.	SCOPE.	1-1
2.	APPLICABLE DOCUMENTS.	2-1
3.	SYSTEM DESCRIPTION	3-1
	3.1 HARDWARE DESCRIPTION	3-1
	3.2 SOFTWARE DESCRIPTION	3-1
	3.2.1 SOFTWARE COMPONENT NO.1 (PFCGAB)	3-1
	3.2.1.1 LINKAGES	3-2
	3.2.1.2 INTERFACES	3-2
	3.2.1.3 INPUTS	3-2
	3.2.1.4 OUTPUTS	3-3
	3.2.1.5 STORAGE REQUIREMENTS.	3-4
	3.2.1.6 DESCRIPTION.	3-4
4.	OPERATION	4-1
	4.1 CARD INPUT	4-2
	4.2 TAPE INPUT	4-5
	4.3 OUTPUT	4-5
	4.4 PROGRAM USE RESTRICTIONS.	4-7
	4.5 SAMPLE DECK SET-UP.	4-7
	4.6 PROGRAM EXECUTION CHARACTERISTICS.	4-8

Appendix

A.	PFCGAB DETAILED FLOWCHART	A-1
B.	PFCGAB PROGRAM LISTINGS	B-1
C.	PFCGAB SMAPLE OUTPUT	C-1
D.	SAMPLE PFCGAB OUTPUT FOR GODDARD TAPE PROCESSING .	D-1

1. SCOPE

The "As-built" Design Specifications for the Production Film Production Film Converter Gains and Biases Program (PFCGAB) are the subject of this document.

PFCGAB is a batch-input stand-alone program, programmed in the Univac Fortran V language, for operation under the EXEC II operating system on the Univac 1108 computer.

The program was developed for the Earth Observations Division (TF) of NASA-JSC. The program requestor and source of requirements was Mr. Richard Nance (TF3).

2. APPLICABLE DOCUMENTS

The following documents, of issue shown, are pertinent to the authorization for development and requirements for the PFCGAB program.

- Requirements for a Computer Program to Investigate PFC Gains and Biases, by Richard Nance (TF3) (No date)
- Action Document 2640: changes to PFCGAB, orignated by R. L. Nance (TF3) (No date)
- LEC Interdepartmental Communication 643-1447, dated 9/28/76: Subject: Modifications to Gains and Biases Program
- TIRF 76-0081

3. SYSTEM DESCRIPTION

A computer program, the Production Film Converter Gains and Biases program (PFCGAB), is described in following sections.

3.1 HARDWARE DESCRIPTION

PFCGAB is operational on the Univac 1108 computer, with the EXEC2 operating system. The program may be made completely compatible with operation on the Univac 1110 and the EXEC8 operating system, with a simple conversion of the EXEC2 PCF (Program Complex File) to an EXEC8 PF (Program File) as documented in the IDSD Procedures Manual, Part 20.

3.2 SOFTWARE DESCRIPTION

The program consists of a main element, PFCGAB, and twelve subprograms: IDHEAD, COVER, PRSTAT, PRXHIS, PFCHIS, PRPCT, PRGAB, TAPERD, UNPK8, UNPACK, TAPLAB, and BYTRAN.

PFCGAB and the first 10 subprograms named are programmed in the Univac Fortran V language. The last two subprograms, BYTRAN and TAPLAB, are programmed in the Univac assembly language SLEUTHII.

3.2.1 SOFTWARE COMPONENT NO.1 (PFCGAB)

PFCGAB (Production Film Converter Gains and Biases) is a program developed for the purpose of computing alternative gains and biases to be used by the PFC (Production Film Converter) when processing LACIE (Large Area Crop Inventory Experiment) images. The program is designed to input LACIE images from tape, and will accept either a GSFC (Goddard Space Flight Center) "CCT" LACIE image tape or ERIPS (Earth Resources Information Processing System) "merge" tape containing LACIE image(s). The program presumes 4-channels per image (ERTS acquisition).

3.2.1.1 Linkages

PFCGAB is the main element. PFCGAB calls the following subprograms:

(1) An assembly language subprogram, TAPLAB, to provide the label of the input tape(s); (2) TAPERD, a Fortran V subprogram which reads the header information and image data from the input LACIE image tape(s); (3) PRXHIS,a Fortran V subprogram which prints the histogram (frequency distribution) of pixels (radiance values) in the LACIE image, (4) PRSTAT, a Fortran V subprogram which prints 4-channel statistics computed over the 5x6 nautical mile sample segment area and the 10x11 nautical mile search area, (4) PRPCT, a Fortran V subprogram which prints a 4-channel tabulation of percentages of pixels, (6) PFCHIS, a Fortran V subprogram which prints a 4-channel histogram (frequency distribution) of PFC grey-shade levels (1-16) versus the number and percentage of pixels in the 5x6 nm sample segment area which are assigned to each grey-shade level, derived using the search area (10x11 nm) gains and biases A1, B1, and (7) PRGAB, a Fortran V subprogram which prints the 29 gains and biases derived in the main program PFCGAB.

3.2.1.2 Interfaces

PFCGAB interfaces with subprograms TAPLAB and TAPERD (entry points TAPHDR, FLDINT, and LINERD) by means of calling arguments. PFCGAB interfaces with the five output subprograms PRXHIS, PRSTAT, PRPCT, PFCHIS,PRGAB - by named common blocks: ALL, PFCH, PRCENT, FREQ, HDATA, STCOMP, ST1011, ST5x6, PGLABL.

3.2.1.3 Inputs

Both card and tape input are required by PFCGAB.

Tape input is required to be assigned to Univac logical unit A (Fortran unit 1). Tape input is required to contain LACIE images either as provided on the LACIE (Large Area Crop Inventory Experiment) image tapes sent to JSC (Johnson Space-craft Center) from GSFC (Goddard Space Flight Center) on "CCT" ("Computer compatible Tape") or as provided from an ERIPS (Earth Resources Image Processing System) "merge" out-put of LACIE images to tape. The format of the tapes may either be Universal format or LARSYS II format. The program will accept and process multi-file tapes.

Card input is expected by the program. Card input is required to be in Fortran V "NAMELIST" format. The "NAMELIST" name for the input is "$CARDIN."

The parameters to be card-input are described in Section 4.0, Program Operation.

3.2.1.4 Outputs

PFCGAB utilizes the printer for all output. Output consists of five tabulations. All tabulations are 4-channel. The output is as follows:

(1) A frequency distribution of pixel (radiance value) versus number and percentage of 5x6 nm sample segment area pixels having each radiance value, (2) basic statistics for the 5x6 nm sample segment area (minimum radiance value, maximum radiance value, radiance value range, arithmetic mean (P2), standard deviation (S2), mean deviation, median, and mode. The 10x11 nm search area statistics output are the arithmetic mean (P1) and standard deviation (S1), along with the search area gain (A1) and second bias (B1). (3) A tabulation of the per-centage of 5x6 nm sample segment area pixels which exceed a radiance value of 60, 90, 60-sun angle corrected, 70-sun angle

corrected, 80-sun angle corrected, and 90-sun angle corrected. (4) A frequency distribution of the PFC grey-shade levels (1-16) versus the number and percentage of 5x6 nm sample segment area pixels assigned to each PFC grey-shade level, using the search area gain and bias (A1, B1). (5) A print-out of all 10x11 nm search area and 5x6 nm sample segment area gains and biases derived by PFCGAB.

If more than 4 channels are processed (i.e., ERIPS "merge" images), the output tabulations are by 4-channel increments- i.e., channels 1-4, 5-8, 9-12, etc.

All output is labeled such that the output variables are self-identified and self-explanatory.

3.2.1.5 Storage Requirements

The computer core-storage requirement for PFCGAB and all subprograms is 5956 I-bank locations, 16728 D-bank locations, and 2647 locations for all 9 Named common blocks. Total core-storeage requirement is 25331 locations.

3.2.1.6 Description

PFCGAB presumes that the input images are LACIE images as provided to JSC from Goddard Space Flight Center, or as derived on ERIPS and output on an ERIPS "merge" tape. The program considers an "image" to contain 4-channel pixels, with 196 pixels per scan line, and 117 scan lines per "image." A maximum of 32 channels will be processed by the program; i.e., up to 8 "images," each "image" being a 4-channel image. This is the method used to process the ERIPS "merge" tapes with multiple LACIE acquisitions.

PFCGAB inputs LACIE images from tape, computes statistics (mean, standard deviation) for the 10x11 nautical mile search area and the 5x6 nautical mile sample segment area (mean, standard deviation, range, mean deviation, median, and mode), computes 5 gains and biases using 10x11 nm search area statistics, and computes 23 gains and biases using 5x6 nm sample segment area statistics.

The 10x11 nautical mile search area gain is A1, and the second bias is B1. A1 is either extracted from the input tape header for Goddard Tapes, or input via namelist "$CARDIN" for ERIPS "merge" tapes. B1 is computed from the search area bias, BO, extracted from the Goddard tape header or input via "$SCARDIN." B1 is computed as follows:

$$B1_i = {}^{BO_i}/_{A1_i}, \quad i = \text{channel no.}$$

The 10x11 search area mean, P1, is computed as follows:

$$P1_i = {}^{-B1_i + 128}/_{A1_i}$$

The 10x11 search area standard deviation, S1, is computed as follows:

$$S1_i = {}^{42.666667}/_{A1_i}$$

The five gains, biases computed using 10x11 nm search area statistics (P1,S1) are: A9, B9, A10, B10, A24, B24, A26, B26, A27, B27. The 10x11 nm search area related gains and biases are computed as follows:

A9, B9

$$A9_i = 256/(40S1_i)$$

$$B9_i = (P1_i - 2S1_i)$$

A10,B10

$A10_i = 256/(5\ Sl_i)$ $\quad i = 1,$ No. Channels

$B10_i = -\ (Pl_i - 2.5\ Sl_i)$

A24,B24 (truncated)

$A24_i = 8$

$B24_1 = (Pl_1 - 16)*8$

$A24_2 = 5$

$B24_2 = -\ (Pl_2 - 26)*5$

$A24_3 = 5$

$B24_3 = -\ (Pl_3 - 32)*5$

$A24_4 = 10$

$B24_4 = (Pl_4 - 13)*10$

A26,B26 (Bands 1,2,4 dependent)

$$P_{new} = MEAN_{new} = \frac{Pl_1 + Pl_2 + 2\ Pl_4}{3}$$

$$M = MAX[(Pl_i + 3\ Sl_i - P_{new}),\ (-Pl_i + 3Sl_i + P_{new})]$$

for i = channels 1, 2, and 4

where for $i = 4$, $Pl_i = 2*Pl_i$

$XHI = P_{new} + M$

$XLO = P_{new} - M$

$A26 = 256/(XHI-XLO)$

$B26 = -\ XLO * A26$

A27,B27 (Bands 2, 3, 4 dependent)

$$P_{new} = MEAN_{new} = \frac{Pl_2 + Pl_3 + 2\ Pl_4}{3}$$

$M = MAX](Pl_i + 3Sl_i - P_{new}), (-Pl_i + 3\ Sl_i + P_{new})]$

for i = 2, 3, 4 and when i = 4, $Pl_i = 2*Pl_i$

$XHI = P_{new} + M$

$XLO = P_{new} - M$

$A27 = 256/(XHI - XLO)$, $B27 = - XLO * A27$

The 5x6 nm sample segment area statistics are computed as follows:

for X_i = radiance value; channel i

NX_i = Number of pixels having radiance value X_i;

N_{TOTAL} = Total number of pixels

$XMIN_i = X_{min_i} = MIN\ [X_i]$ = minimum radiance value, channel i

$XMAX_i = X_{max_i} = MAX\ [X_i]$ = maximum radiance value, channel i

$XRANGE_i = RANGE_i = X_{max_i} - X_{min_i}$

$XMED_i = MEDIAN_i = X_i$, for the X_i at which $N_{X_i} \geq \frac{N_{TOTAL}}{2}$

$XMODE_i = MODE_i = X_i$, for the X_i satisfying $MAX[N_{X_i}]$

$$P2_i = MEAN_i = \frac{\sum X_i}{N_{TOTAL}}$$

$$XMNDEV_i = MEAN\ DEVIATION_i = \frac{\sum | X_i - P2_i |}{N_{TOTAL}}$$

$$S2_i = STANDARD\ DEVIATION_i = \left(\sum x_i^2 - \frac{\left(\sum X_i\right)^2}{N_{TOTAL}} \right) \Big/ \left(N_{TOTAL} - 1\right)$$

The gains and biases computed using the 5x6 nm sample segment area means and standard deviation (P2 and S2) or mean deviation are as follows:

A2 ,B2

$$A2_i = 256/6\ S2_i \qquad B2_i = -\ (P2_i - 3\ S2_i)$$

A3,B3 (truncated distribution)

$$P3_i = \frac{\sum X_i,}{N_{TOTAL_i}} = \text{MEAN}$$

$$S3_i = \left(\sum X_i^2 - \frac{\sum X_i}{N_{TOTAL_i}}^2\right) \Big/ \left(N_{TOTAL_i} - 1\right)$$

where, for i = 1, $4 \leq X_i \leq 120$
for i = 2, $3 \leq X_i \leq 120$
for i = 3, $5 \leq X_i \leq 120$
for i = 4, $2 \leq X_i \leq 61$

$$A3_i = 256/6\ S3_i,\ B3_i = (P3_i - 3\ S3_i)$$

A4,B4 (truncated distribution)

$$P4_i = \text{MEAN} = \frac{\sum X_i}{N_{TOTAL_i}}$$

$$S4_i = \text{std. deviation} = \left(\sum X_i^2 - \frac{\left(\sum X_i\right)^2}{N_{TOTAL_i}}\right) \Big/ \left(N_{TOTAL_i} - 1\right)$$

where; for $i = 1$, $10 \leq X_i \leq 80$
$i = 2$, $10 \leq X_i \leq 80$
$i = 3$, $10 \leq X_i \leq 80$
$i = 4$, $5 \leq X_i \leq 40$

$A4_i = 256/6\ S4_i$, $B4_i = -\ (P4_i - 3\ S4_i)$

A5,B5 (truncated distribution)

$$P5_i = \text{MEAN} = \frac{\sum X_i}{N_{TOTAL_i}}$$

$$S5_i = \text{std. deviation} = \left(\sum X_i^2 - \frac{\left(\sum X_i\right)^2}{N_{TOTAL_i}} \right) \Bigg/ \left(N_{TOTAL_i} - 1\right)$$

where, for $i = 1$, $20 \leq X_i \leq 60$
$i = 2$, $20 \leq X_i \leq 60$
$i = 3$, $20 \leq X_i \leq 60$
$i = 4$, $7 \leq X_i \leq 30$

A6,B6

$A6_i = 256/4\ S2_i$ $\qquad$ $B6_i = (P2_i - 2\ S2_i)$

A7,B7 (uses mean deviation)

$A7_i = 256/6D_i$ $\qquad$ $B7_i = -\ (P2_i - 3D_i)$

where D_i = mean deviation $= \dfrac{\sum | X_i - P2_i |}{N_{TOTAL}}$

A8,B8 (3σ truncation)

$$A8_i = \frac{256}{X_{MAX_i} - X_{MIN_i}}, \qquad B8_i = -X_{MIN_i}$$

where $X_{MAXI_i} = X_{UT_N}$ for $N = .00135\ N_{TOTAL}$ (UT = upper tail)

$X_{MIN_i} = X_{LT_N}$ for $N = .00135\ N_{TOTAL}$ (LT = lower tail)

A14,B14 (2.5σ truncation)

$$A14_i = \frac{256}{X_{MAX_i} - X_{MIN_i}}, \qquad B14_i = -X_{MIN_i}$$

where $X_{MAX_i} = X_{UT_N}$ for $N = .0065\ N_{TOTAL}$

$X_{MIN_i} = X_{LT_N}$ for $N = .0065\ N_{TOTAL}$

A15,B15 (2.0σ truncation)

$$A15_i = \frac{256}{X_{MAX_i} - X_{MIN_i}}, \qquad B15_i = -X_{MIN_i}$$

where $X_{MAX_i} = X_{UT_N}$ for $N = .0225\ N_{TOTAL}$

$X_{MIN_i} = X_{LT_N}$ for $N = .0225\ N_{TOTAL}$

A16,B16 (3σ truncation)

$$A16_i = \frac{256}{X_{MAX_i} - X_{MIN_i}}, \qquad B16_i = -(P2_i - X_{P2_i} - 3\sigma)$$

where $X_{MAX_i} = X_{UT_N}$ for $N = .00135\ N_{TOTAL}$

$X_{MIN_i} = X_{LT_N}$ for $N = .00135\ N_{TOTAL}$

$X_{P2_i} - 3\sigma = X_i$ at X_{LT} such that $N_{\bar{X}_i} + N_{X_i} \geq .49865\ N_{TOTAL}$

where $\bar{X}_i$ is mean radiance value, band i

A17,B17 (2.5σ truncation)

$$A17_i = \frac{256}{X_{MAX_i} - X_{MIN_i}} \quad , \quad B17_i = -(P2_i - X_{P2_i} - 2.5\sigma)$$

where $X_{MAX_i} = X_{UT_N}$ for $N = .00655\ N_{TOTAL}$

$X_{MIN_i} = X_{LT_N}$ for $N = .00655\ N_{TOTAL}$

$X_{P2_i} - 2.5\sigma = X_i$ at X_{LT} such that

$$N_{\bar{X}_i} + N_{X_i} \geq .49345\ N_{TOTAL}$$

where X_i = mean radiance, band i

A18,B18 (2.0σ truncation)

$$A18_i = \frac{256}{X_{MAX_i} - X_{MIN_i}} \quad , \quad B18_i = -(P2_i - X_{P2_i} - 2\sigma)$$

where $X_{MAX_i} = X_{UT_N}$ for $N = .0229\ N_{TOTAL}$

$X_{MIN_i} = X_{LT_N}$ for $N = .0229\ N_{TOTAL}$

$X_{P2_i} - 2\sigma = X_i$ at X_{LT} such that $N_{\bar{X}_i} + N_{X_i} \geq .4771\ N_{TOTAL}$

where $\bar{X}_i$ = mean radiance value, band i

A21,B21 (3σ truncation)

$$A21_i = \frac{256}{6\ S_{NEW_1}} \quad , \quad B21_i = -(P_{NEW_1} - 3\ S_{NEW_1})$$

where: $$S_{NEW_1} = \left(\sum X_i^2 - \frac{\left(\sum X_i\right)^2}{N_{TOTAL_1}} \right) \Big/ \left(N_{TOTAL_1} - 1 \right)$$

$$P_{NEW_1} = \frac{\sum X_i}{N_{TOTAL_1}}$$

with X_i constrained to be within the range

$P2_i - 3\ S2_i < X_i < P2_i + 3\ S2_i$

and N_{TOTAL_1} = Total no. pixels in the range $P2_i - 3\ S2_i < X_i < P2_i + 3\ S2_i$

A22,B22 (iterated 3σ truncation)

$$A22_i = \frac{256}{6\ S_{NEW_2}} \quad , \quad B22_i = -\ (P_{NEW_2} - 3\ S_{NEW_2})$$

where $$S_{NEW_2} = \left(\sum X_i^2 - \frac{\left(\sum X_i\right)^2}{N_{TOTAL_2}} \right) \Bigg/ \left(N_{TOTAL_2} - 1 \right)$$

$$P_{NEW_2} = \frac{\sum X_i}{N_{TOTAL_2}}$$

with X_i constrained within the range

$$P_{NEW_1} - 3\ S_{NEW_1} \leq X_i \leq P_{NEW_1} + 3\ S_{NEW_1}$$

and N_{TOTAL_2} = total no, pixels in the range $P_{NEW_1} - 3\ S_{NEW_1} \leq X_i \leq P_{NEW_1} + 3\ S_{NEW_1}$

A23,B23 (truncated, sun angle corrected)

$$A23_i = \frac{256}{6\ S_{T_i}} \quad , \quad B23_i = -\ (P_{T_i} - 3\ S_{T_i})$$

S_T = std. deviation of truncated distribution

P_T = mean of truncated distribution

where:

for i = 1, $4*CFACT \leq X_i \leq 80*CFACT$

i = 2, $4*CFACT \leq X_i \leq 80*CFACT$

i = 3, $4*CFACT \leq X_i \leq 80*CFACT$

$i = 4, \quad 2*CFACT \leq X_i \leq 40*CFACT$

$$\text{and } S_{T_i} = \left(\sum X_i^2 - \frac{\left(\sum X_i \right)^2}{N_{TOTAL_i}} \right) \Big/ \left(N_{TOTAL_i} - 1 \right)$$

$$P_{T_i} = \frac{\sum X_i}{N_{TOTAL_i}}$$

and N_{TOTAL_i} = total no. radiance values, channel i, within the range constraint for channel i

and $CFACT = \frac{\text{SIN } 60°}{\text{SIN SUN ANGLE}}$

A11,B11

$$A11_i = \frac{256}{5\ S2_i}, \quad B11_i = -(P2_i - 2.5\ S2_i)$$

A12,B12

$$A12_i = \frac{256}{5\ D_i}, \quad B12_i = -(P2_i - 2.5\ D_i)$$

where $D_i = \frac{\sum | X_i - P2_i |}{N_{TOTAL}}$ = mean deviation, channel i

A13,B13

$$A13_i = \frac{256}{4D_i}, \quad B13_i = -(P2_i - 2.0\ D_i)$$

where D_i = mean deviation in channel i = $\frac{\sum | X_i - P2_i |}{N_{TOTAL}}$

A25,B25

$A25_1 = 8$, $B25_1 = -(P2_1-16)*8$

$A25_2 = 5$, $B25_2 = -(P2_2-26)*5$

$A25_3 = 5$, $B25_3 = -(P2_3-32)*5$

$A25_4 = 10$, $B25_4 = -(P2_4-13)*10$

A19,B19 (Bands 1, 2, 4 dependent)

$$A19 = \frac{256}{X_{MAX} - X_{MIN}} \quad , \quad B19 = -X_{MIN}$$

where $X_{MAX} = MAX\ [X_i]$

$X_{MIN} = MIN\ [X_i]$

for i = Channels 1, 2, and 4,
with constraint that X_i at i = 4 = $2*X_i$

A28,B28 (Bands 1, 2, 4 dependent)

$$A28 = \frac{256}{X_{HI} - X_{LO}} \quad , \quad B28 = -X_{LO}*A28$$

where:

$X_{HI} = P_{NEW} + M$

$X_{LO} = P_{NEW} - M$

P_{NEW} = NEW MEAN = $\dfrac{P2_1 + P2_2 + 2P2_4}{3}$

$$M = MAX\left[(P2_i + 3\ S2_i - P_{NEW}),\ (-P2_i + 3\ S2_i + P_{NEW})\right]$$

for i = channels 1, 2, and 4

A20,B20 (Bands 2,3, 4 dependent)

$$A20 = \frac{256}{X_{MAX} - X_{MIN}} \quad , \quad B20 = -X_{MIN}$$

where $X_{MAX} = MAX\ [X_i]$

$X_{MIN} = MIN\ [X_i]$

for i = channels 2, 3, 4 and constraint $X_i = 2\ X_i$, for i = 4

A29,B29 (Bands 2, 3, 4 dependent)

$$A29 = \frac{256}{X_{HI} - X_{LO}}, \quad B29 = -X_{LO} * A29$$

where $X_{HI} = P_{NEW} + M$

$X_{LO} = P_{NEW} - M$

$$P_{NEW} = \text{new mean} = \frac{p2_2 + P2_3 + P2_4}{3}$$

$$M = MAX\left[\left(P2_i + 3S2_i - P_{NEW}\right),\ \left(-P2_i + 3S2_i + PNEW\right)\right]$$

for i = channels 2, 3, 4

PFCGAB also computes and outputs the frequency distribution of PFC grey-shade levels for the input image radiance values, using the 10x11 nm search area gain, A1, and second bias, B1. The PFC grey-shade levels are computed such that there is equal probability of image radiance values being assigned to the 16 PFC grey levels, as follows:

$Y_i = A1_i * (X_i + B1_i)$ = gain, and bias corrected radiance value, channel i

$Y_{MAX_i} = MAX\ [Y_i]$

$Y_{MIN_i} = MIN\ [Y_i]$

ΔZ_i = grey-level increment = $\dfrac{16.0}{Y_{MAX_i} - Y_{MIN_i}}$

Ny = Number of Y-values = $Y_{MAX} - Y_{MIN} + 1.0$

LEVEL = $J*\Delta Z+1$, J = 1,2,...,Ny

with constraint that $1(\leq \text{LEVEL}) \leq 16$, integers.

$\text{FREQUENCY}_J = \sum N_{X_i} \Rightarrow Y_{J_i}$; i.e., the number of pixels at PFC level J = the number of pixels mapped into Y_T and $Y_J = 1*\Delta Z \leq Y_J \leq Y_J + 1*\Delta Z$

A sun angle may be input to PFCGAB from either the input image tape header (for GSFC tapes) or by NAMELIST $CARDIN card input. If available, a sun angle correction factor is computed as follows:

CFACT = sun angle correction factor = $\dfrac{\text{SIN (60°)}}{\text{SIN (Sun angle)}}$

If the sun-angle is available the sun angle correction is applied to the 5x6 nm sample segment area statistics for output of sun angle-corrected statistics computed as follows:

$CXMIN_i = CFACT * XMIN_i$ = corrected X_{MIN}

$CXMAX_i = CFACT * XMAX_i$ = corrected X_{MAX}

$CRANGE_i = CFACT * XRANGE_i$ = corrected range

$CMEAN_i$ = CFACT * $P2_i$ = corrected mean

$CSTDEV_i$ = CFACT * $S2_i$ = corrected standard deviation

$CMNDEV_i$ = CFACT * $XMNDEV_i$ = corrected mean deviation

$CMODE_i$ = CFACT * $XMODE_i$ = corrected mode

$CMED_i$ = CFACT * $XMED_i$ = corrected median

for i = band 1, 2, 3, 4

3.2.1.7 Flowcharts

The detail flowchart for PRCGAB is contained in Appendix A of this document.

3.2.1.8 Program Listings

The listing for every element in the PFCGAB program is contained in Appendix B of this document.

4. OPERATION

Program PFCGAB is executed via a batch-run deck submitted to the NASA-JSC central computing complex in Building 12. The run deck must have as the innitial card in the deck the Univac "Run" card ("7/8 RUN ...") as documented in the Institutional Data Systems Division (IDSD) Procedures Manual, Part 19. The necessary Univac system control cards to assign the input data tape and the program tape to the run are illustrated in the "Sample Deck" illustration, section 4.5. Execution of the program, after the program tape contents have been entered into the Program Complex File area of the drum, is by means of the Univac Control card, "7/8 XQT PFCGAB." Following the "7/8 XQT PFCGAB" control card one or more Fortran V NAMELIST inputs are expected. The NAMELIST Name for input is "$CARDIN," with "$" always punched in card column 2 of the card.

The final card in the batch-run deck, following all NAMELIST "$CARDIN....$END" sets of variable values input to the program, should be the Univac End-of-File control card, "7/8 EOF." The EOF card is the program's signal to stop attempting to read "$CARDIN...$END" inputs, and terminate execution.

The specific variables which may be card-input to the program via NAMELIST $CARDIN are described below. The user is cautioned that NAMELIST input demands that the variables be input by "Name = value," and that the Name must be spelled accurately in the input.

The two required tapes to be input, and the program's printed output are also described below.

4.1 CARD INPUT

Input is by MEANS of NAMELIST "$CARDIN," i.e., "$CARDIN
VAR1 = XX, VAR2 = Y, VAR3 = Z, VAR4(1) = XYZ.W,..., $END "

The variables which may be input, by NAME, are:

Variable	Description
GSFCTP	(Integer) Flag to indicate that the input tape is a Goddard-generated tape- GSFCTP $\geq$ 1, input tape is a Goddard tape GSFCTP $\leq$ 0, input tape is not a Goddard tape
REGTP	(Integer) Flag to indicate that the input tape is one produced from segment-registration studies- REGTP $\geq$ 1, input tape is a registration tape. REGTP $\leq$ 0, input tape is not a "registration" tape (NOTE; The capability to process registration tapes is not in the program at this time)
MERGTP	(Integer) Flag to indicate that the input Tape is a "merged-image" Tape from ERIPS- MERGTP $\geq$ 1, input tape is a merged-image tape. MERGTP $\leq$ 0, input tape is not a merged-image tape.
NFILES	(Integer) number of files to process, on the input tape (default = 1).
FSTART	(Integer) FIRST FILE NUMBER, at which processing is to begin on the input tape (default = 1) Processing of the input Tape begins at

Variable	Description
	FSTART, and NFILES files will be sequentially processed on the Tape.
NUMCH	(Integer) The total number of channels on the Tape-input image; should be an integral multiple of 4 channels (i.e.; 4, 8, 12, 16, 20, ..., 32) (default set = 4 channels)
EL	(Integer) Sun angle. If the Sun angle is input, the input sun angle will be used in computing sun-angle corrections to the 5x6 area statistics. If the sun angle is not input, and is not available from the input tape header record, no sun-angle corrections will be attempted by the program. (default set = 0)
A	(floating point) dimensioned = 4 - the 10x11 search area gain for 4 channels (A1), may be input as: "A(1) = XX.X, A(2) = XX.X, A(3) = XX.X, A(4) = XX.X" (default set = 0.0)
B	(floating point) dimensioned = 4 - the 10x11 search area biases (B1) for 4 channels may be input as: "B(1) - XX.X, B(2) = XX.X, B(3) = XX.X B(4) = XX.X" (default set = 0.0) (NOTE: If A1 and B1 <u>are</u> input via A and B, the input gains and biases <u>will</u> be used, instead of the Tape-supplied A1, B1, if available. If A1, B1 are

Variable	Description
	are neither input nor available from the tape, the gains and biases computed from A1, B1 are bypassed in the program, and will not be present in the printed output)

The default (program-set) values assigned to the input variables are:

GSFCTP = 1 (i.e., Goddard tape is the default)
REGTP = 0
MERGTP = 0
FSTART = 1 (file no. 1 is the default)
NFILES = 1 (the number of files = 1 is the default)
MUMCH = 4 (total No. of channels on the tape = 4 is the default)
A(1), A(2), A(3), A4 = 0.0
B(1), B(2), B(3), B(4) = 0.0

Any variable not specifically input, by NAME and value, will go into execution with the program-set default value. An "empty" NAMELIST input ("$CARDIN $END") will result in program execution with all input variables set to the default values.

The program expects and will execute multiple "$CARDIN... $END" inputs. There is No requirement to order multiple "$CARDIN $END" namelist inputs with respect to type of tape being processed, or the files to be processed.

The program expects to be terminated by an "End-of-file" card ("7/8 EOF"), following the last "$CARDIN...$END" NAMELIST input.

4.2 TAPE INPUT

The input Tape must be assigned to (logical) Univac unit "A" (Fortran unit 1). The input tape is presumed to be in the "Univeral" (or LARSYS2) tape format, one or more files, and four or more channels per input image up to a maximum of 32 channels. The program internally processes "images" with 4-channels per "image" pixel, 196 pixels per scan line and 117 scan lines. The input tape is also presumed to be a 9-TRACK tape, on the sample deck set-up shown in a succeeding section.

The program (PCF) tape may be assigned to any unit other than "A" ("B" - "Z"). The program is entered into the computer from the program tape by appropriate use of the EXEC II system "CUR" ("Complex utility Routines") commands. See the sample deck set-up for the format and sequence of the control cards and commands to bring in the program from tape.

The current Bldg. 12 library tape number for the program tape is X01400.

4.3 OUTPUT

All output is printer output, as follows:

The first page contains various self-identified quantities from the "universal" tape header record, which are pertinent to the imagery in the file being processed.

The second and succeeding pages of output are generated by program PFCGAB. Each page of output of a given type is headed by:

File No., of current input tape file being processed
LACIE Sample Segment No., of current input tape file being processed.
Sample Segment I.D. (LANDSAT Orbit) of the segment
Latitude, Longitude, of sample segment center
Sun elevation,
Sun Azimuth, at the time the imagery was LANDSAT-acquired (in degrees)

All these quantities are obtained from the tape header record associated with the input tape file being processed.

The first page of program PFCGAB output contains the uncorrected and (sun elevation) corrected statistics for the 5x6 nm sample segment, and the statistics and bais and gain from the 10x11 nm search area, on a per-channel basis.

The second page of program PFCGAB output contains a tabulation of the percentage of pixels in the 5x6 nm sample segment, which exceed certain pre-selected pixel values, on a per-channel basis.

The third (and probably fourth) pages of PFCGAB output are a frequency distribution histogram of the input 5x6 sample segment pixels, on a per-channel basis.

The page following the 5x6 sample segment histogram is a histogram of the frequency distribution of the Production Film Converter (PFC) gray-shade levels for 5x6 nm sample segment, after application of the Goddard (or input) bias and scale factors (A1,B1) to the input imagery.

Following the PFC Frequency Distribution, the PFCGAB program outputs the gain, bias, mean, and standard deviation for the 10x11 nm search area (A1, B1, P1, S1), the 5x6 NM sample segment area (A2, B2, P2, S2) and the program-computed gain, bias, mean, standard deviation for 3 pre-selected truncated distributions of the 5x6 NM area, the bias and scaling factor for "modified" (4 std dev.) standard deviation, the "average" (256/6x mean deviation) scaling and bias (= sample mean - 3 mean deviations), and the "percent" scale and bias factor computed from the sample segment distribution within .00135 tail limits. All computations shown on a per-channel basis. Succeeding pages of output contain the self-identified gains and biases computed by the program using various combinations of multiples of the standard deviation. See section 3.2.1.6, Description, for the method of computing the output gains and biases.

4.4 PROGRAM USE RESTRICTIONS

Although input is set up for three types of input tapes, the program is currently restricted to input and processing of the Goddard or ERIPS "merge" tapes only. Processing of the registration tapes requires additional specialized card-input variables to compensate for the lack of usable header information on the "registration" tapes.

Also, the user is cautioned that NAMELIST input variables retain their values until specifically changed by input of the variable, by NAME, on a "$CARDIN...$END" namelist input.

4.5 SAMPLE DECK SET-UP

Card Column 1

```
7/8ØRUNØ···
7/8ØSCHØØ9T = 1, TT=1
```

```
7/8AN⌀ASG⌀A=XXXXX
7/8bASG⌀B=X01400
7/8⌀XQT⌀CUR
     TRW A,B
     IN ⌀⌀ B
     TRI B
     TOC
7/8⌀ XQT ⌀⌀ PFCGAB
```

Card Column 2

```
$CARDIN ⌀⌀ VAR. NAME1=X, VAR. NAME=XX, ... $END
7/8⌀EØF
```

4.6 PROGRAM EXECUTION CHARACTERISTICS

Typical run-time, for a multi-file execution, is on the order of 1 minute per file. The amount (No. of pages) of print-out to be expected is estimated as 4 pages + no. files x 10 pages per file.

The program executes on the UNIVAC 1108, EXEC2 operating system, in batch mode. The program run deck, user-supplied input tape, and the required form 588, "Instructions for Central Computer Complex Runs," are submitted to the dispatch desk in building 12. The tape, if properly labeled by the user, and printed output from the run will be returned to the location code supplied on the "7/8 RUN" card of the deck, and noted in the proper place on the form 588 input to the dispatch area with the run deck.

It is advisable to note on the F m 588, in the "Programmer Comments" area, that a 9-track tape unit is required for the run, and also on the form 588 under "Input Tapes," where the input tape unit and number are shown, to add a notation beside the input tape that it is a 9-track tape.

NOTE: The program is not restricted to run with a 9-track input data tape. If LACIE imagery is to be input on a 7-track tape, the only required change is in the run deck, to use the correct Univac "7/8 ASG" control card options for the type of tape (9-track or 7-track) being input.

APPENDIX A

PFCGAB DETAILED FLOWCHART

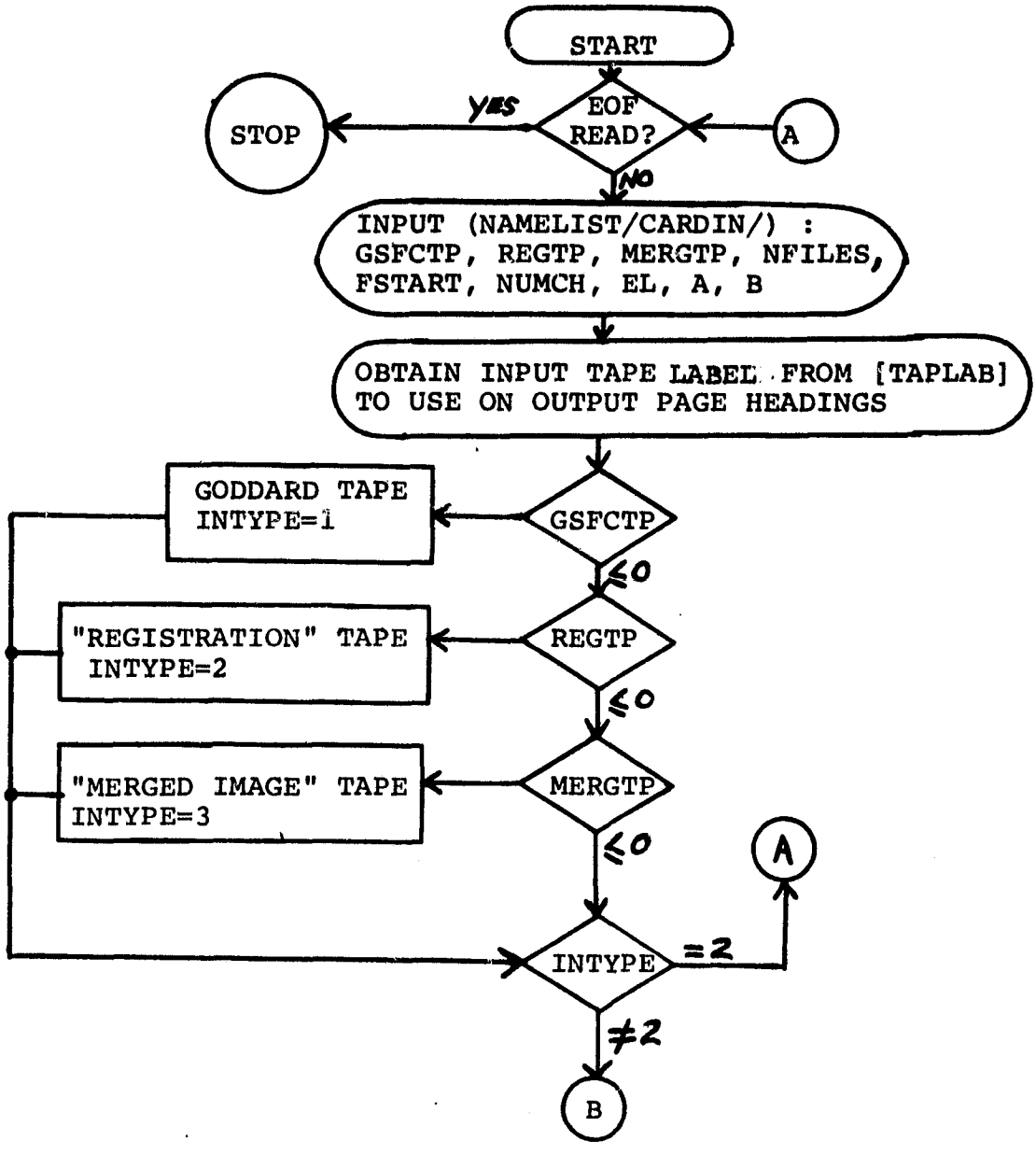
START
EOF READ?
YES
STOP
A
NO
INPUT (NAMELIST/CARDIN/) :
GSFCTP, REGTP, MERGTP, NFILES,
FSTART, NUMCH, EL, A, B
OBTAIN INPUT TAPE LABEL FROM [TAPLAB]
TO USE ON OUTPUT PAGE HEADINGS
GSFCTP
GODDARD TAPE
INTYPE=1
≤0
REGTP
"REGISTRATION" TAPE
INTYPE=2
≤0
MERGTP
"MERGED IMAGE" TAPE
INTYPE=3
≤0
A
INTYPE
=2
≠2
B

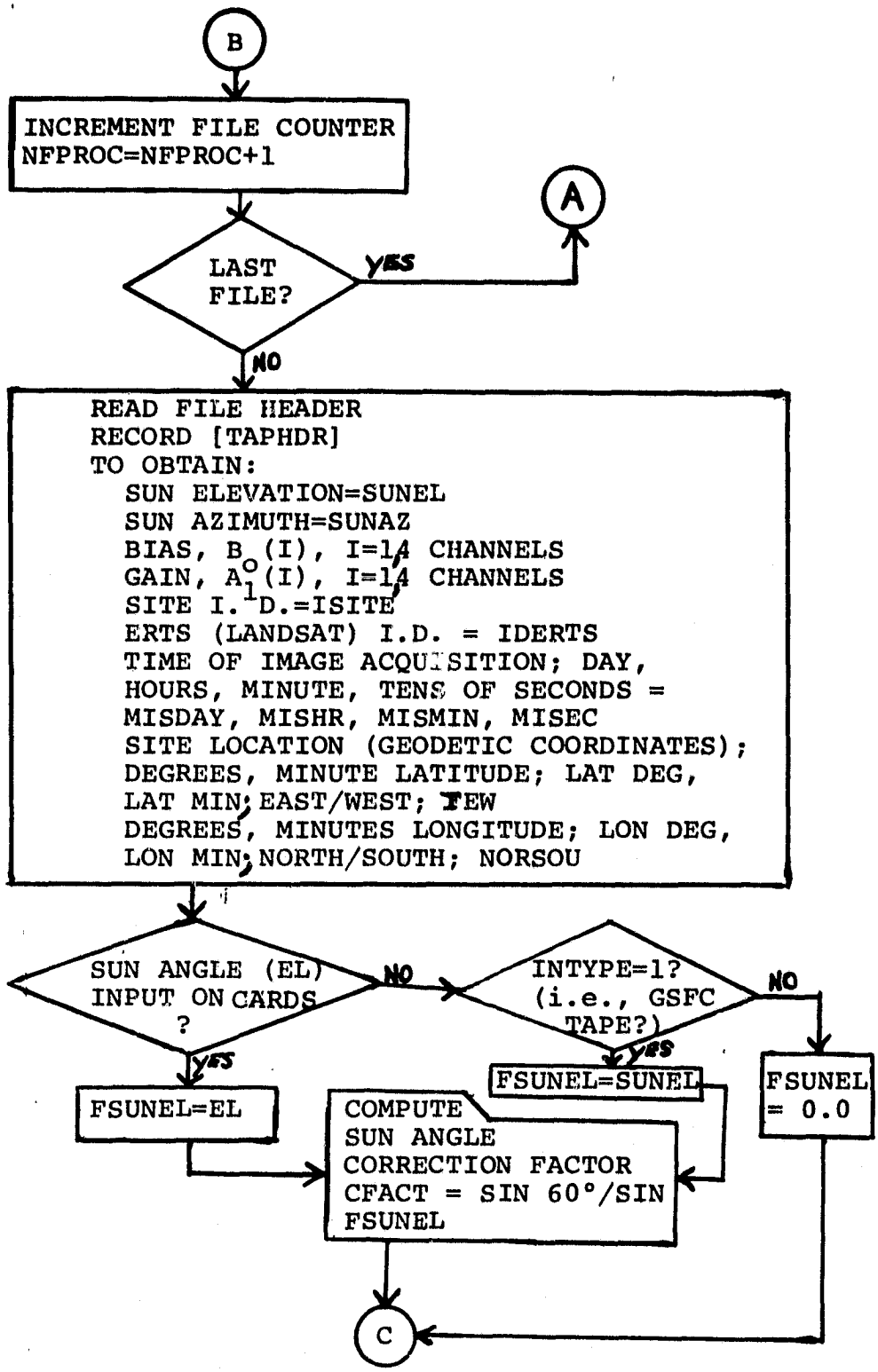
B
INCREMENT FILE COUNTER
NFPROC=NFPROC+1
A
LAST FILE?
YES
NO
READ FILE HEADER
RECORD [TAPHDR]
TO OBTAIN:
SUN ELEVATION=SUNEL
SUN AZIMUTH=SUNAZ
BIAS, B0(I), I=1,4 CHANNELS
GAIN, A1(I), I=1,4 CHANNELS
SITE I.D.=ISITE
ERTS (LANDSAT) I.D. = IDERTS
TIME OF IMAGE ACQUISITION; DAY,
HOURS, MINUTE, TENS OF SECONDS =
MISDAY, MISHR, MISMIN, MISEC
SITE LOCATION (GEODETIC COORDINATES);
DEGREES, MINUTE LATITUDE; LAT DEG,
LAT MIN; EAST/WEST; EW
DEGREES, MINUTES LONGITUDE; LON DEG,
LON MIN; NORTH/SOUTH; NORSOU
SUN ANGLE (EL) INPUT ON CARDS ?
NO
YES
INTYPE=1? (i.e., GSFC TAPE?)
NO
YES
FSUNEL=EL
FSUNEL=SUNEL
FSUNEL = 0.0
COMPUTE SUN ANGLE CORRECTION FACTOR
CFACT = SIN 60°/SIN FSUNEL
C

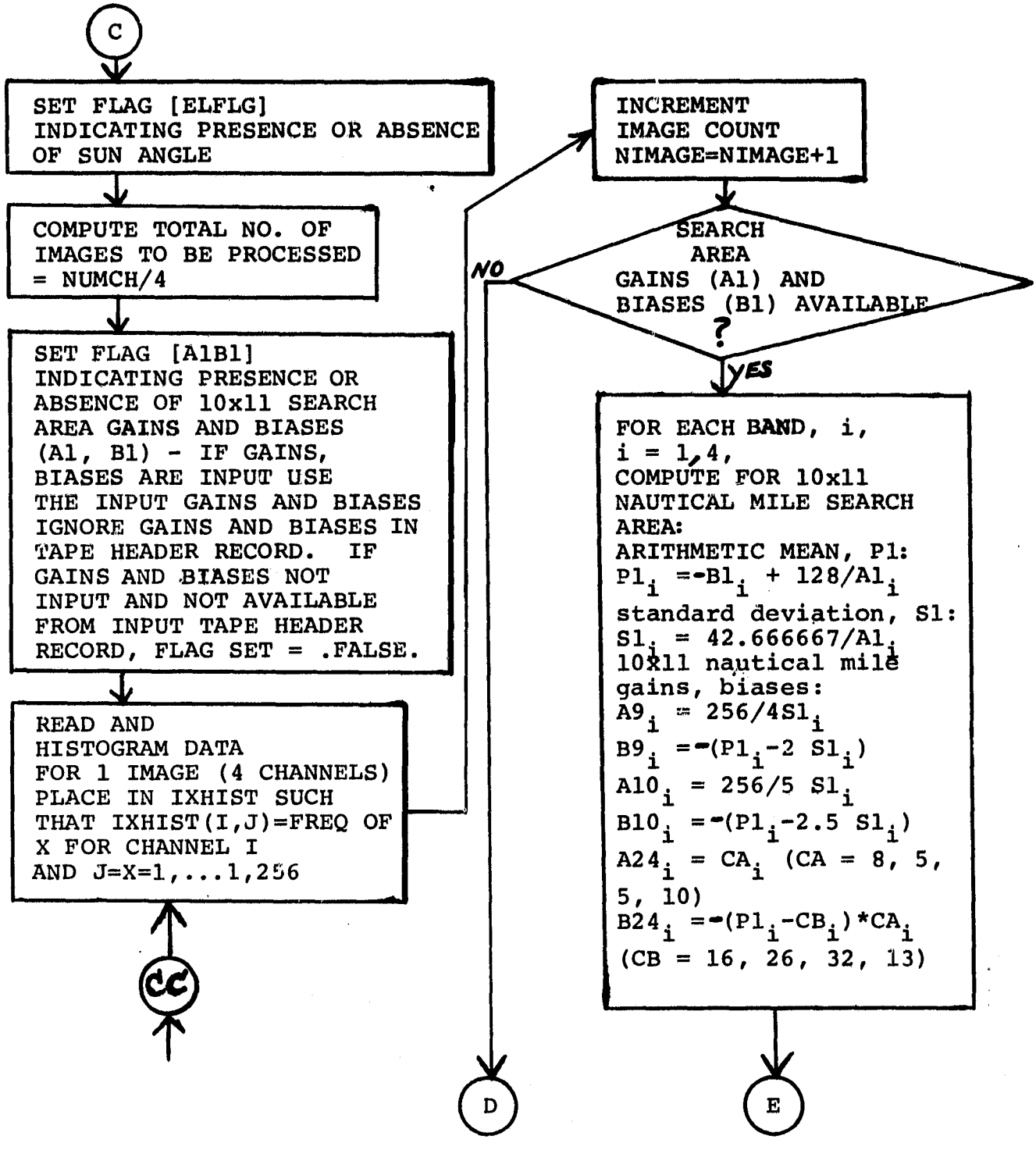
C
SET FLAG [ELFLG] INDICATING PRESENCE OR ABSENCE OF SUN ANGLE
COMPUTE TOTAL NO. OF IMAGES TO BE PROCESSED = NUMCH/4
SET FLAG [A1B1] INDICATING PRESENCE OR ABSENCE OF 10x11 SEARCH AREA GAINS AND BIASES (A1, B1) - IF GAINS, BIASES ARE INPUT USE THE INPUT GAINS AND BIASES IGNORE GAINS AND BIASES IN TAPE HEADER RECORD. IF GAINS AND BIASES NOT INPUT AND NOT AVAILABLE FROM INPUT TAPE HEADER RECORD, FLAG SET = .FALSE.
READ AND HISTOGRAM DATA FOR 1 IMAGE (4 CHANNELS) PLACE IN IXHIST SUCH THAT IXHIST(I,J)=FREQ OF X FOR CHANNEL I AND J=X=1,...1,256
CC
INCREMENT IMAGE COUNT NIMAGE=NIMAGE+1
SEARCH AREA GAINS (A1) AND BIASES (B1) AVAILABLE ?
NO
YES
FOR EACH BAND, i, i = 1,4, COMPUTE FOR 10x11 NAUTICAL MILE SEARCH AREA:
ARITHMETIC MEAN, P1:
$P1_i = -B1_i + 128/A1_i$
standard deviation, S1:
$S1_i = 42.666667/A1_i$
10x11 nautical mile gains, biases:
$A9_i = 256/4S1_i$
$B9_i = -(P1_i - 2\ S1_i)$
$A10_i = 256/5\ S1_i$
$B10_i = -(P1_i - 2.5\ S1_i)$
$A24_i = CA_i$ (CA = 8, 5, 5, 10)
$B24_i = -(P1_i - CB_i) * CA_i$
(CB = 16, 26, 32, 13)
D
E

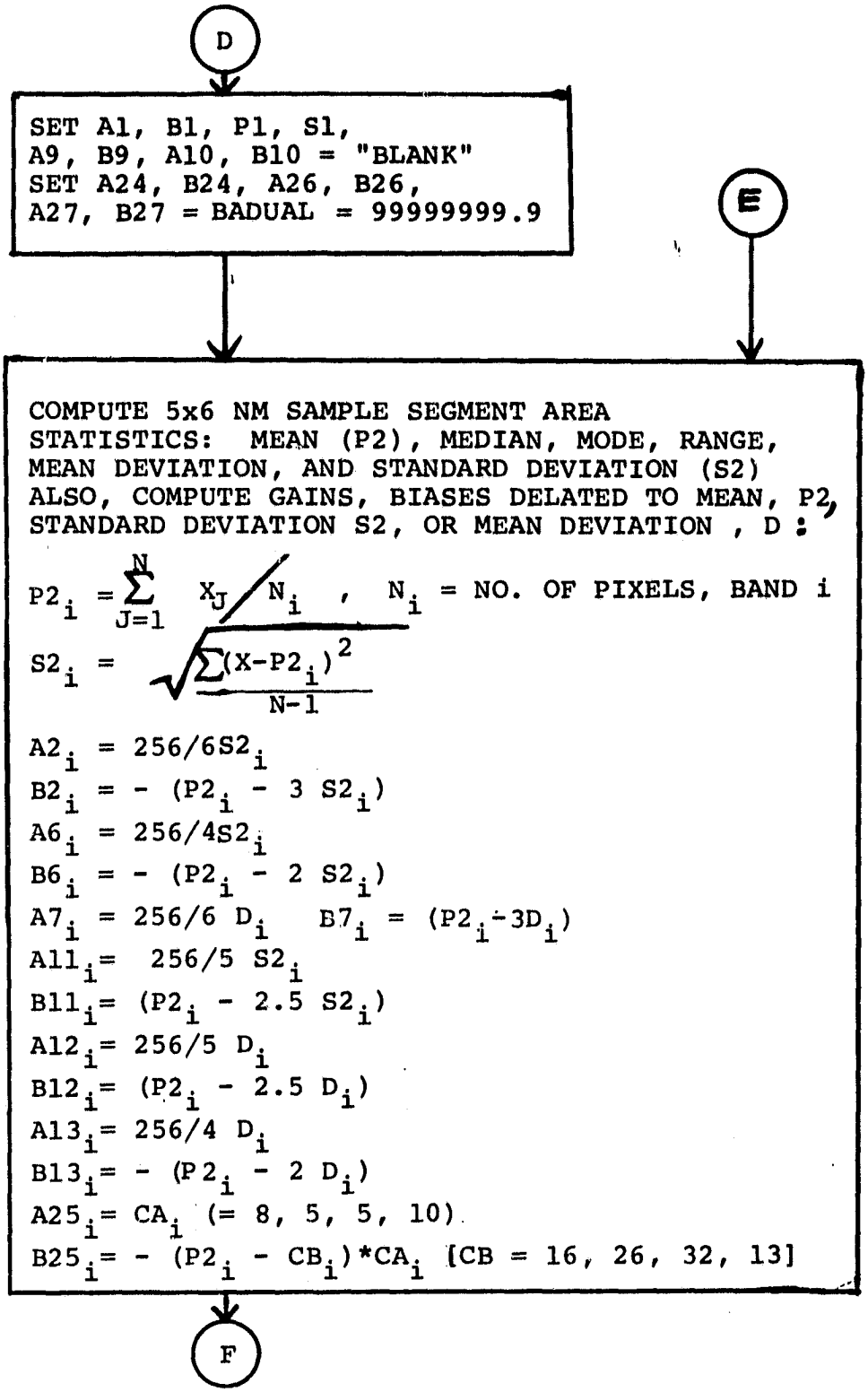
D
SET A1, B1, P1, S1,
A9, B9, A10, B10 = "BLANK"
SET A24, B24, A26, B26,
A27, B27 = BADUAL = 99999999.9
E
COMPUTE 5x6 NM SAMPLE SEGMENT AREA
STATISTICS: MEAN (P2), MEDIAN, MODE, RANGE,
MEAN DEVIATION, AND STANDARD DEVIATION (S2)
ALSO, COMPUTE GAINS, BIASES DELATED TO MEAN, P2,
STANDARD DEVIATION S2, OR MEAN DEVIATION , D :
$P2_i = \sum_{J=1}^{N} X_J / N_i$, N_i = NO. OF PIXELS, BAND i
$S2_i = \sqrt{\frac{\sum (X-P2_i)^2}{N-1}}$
$A2_i = 256/6S2_i$
$B2_i = -(P2_i - 3\ S2_i)$
$A6_i = 256/4S2_i$
$B6_i = -(P2_i - 2\ S2_i)$
$A7_i = 256/6\ D_i$ $B7_i = (P2_i - 3D_i)$
$A11_i = 256/5\ S2_i$
$B11_i = (P2_i - 2.5\ S2_i)$
$A12_i = 256/5\ D_i$
$B12_i = (P2_i - 2.5\ D_i)$
$A13_i = 256/4\ D_i$
$B13_i = -(P2_i - 2\ D_i)$
$A25_i = CA_i$ (= 8, 5, 5, 10)
$B25_i = -(P2_i - CB_i)*CA_i$ [CB = 16, 26, 32, 13]
F

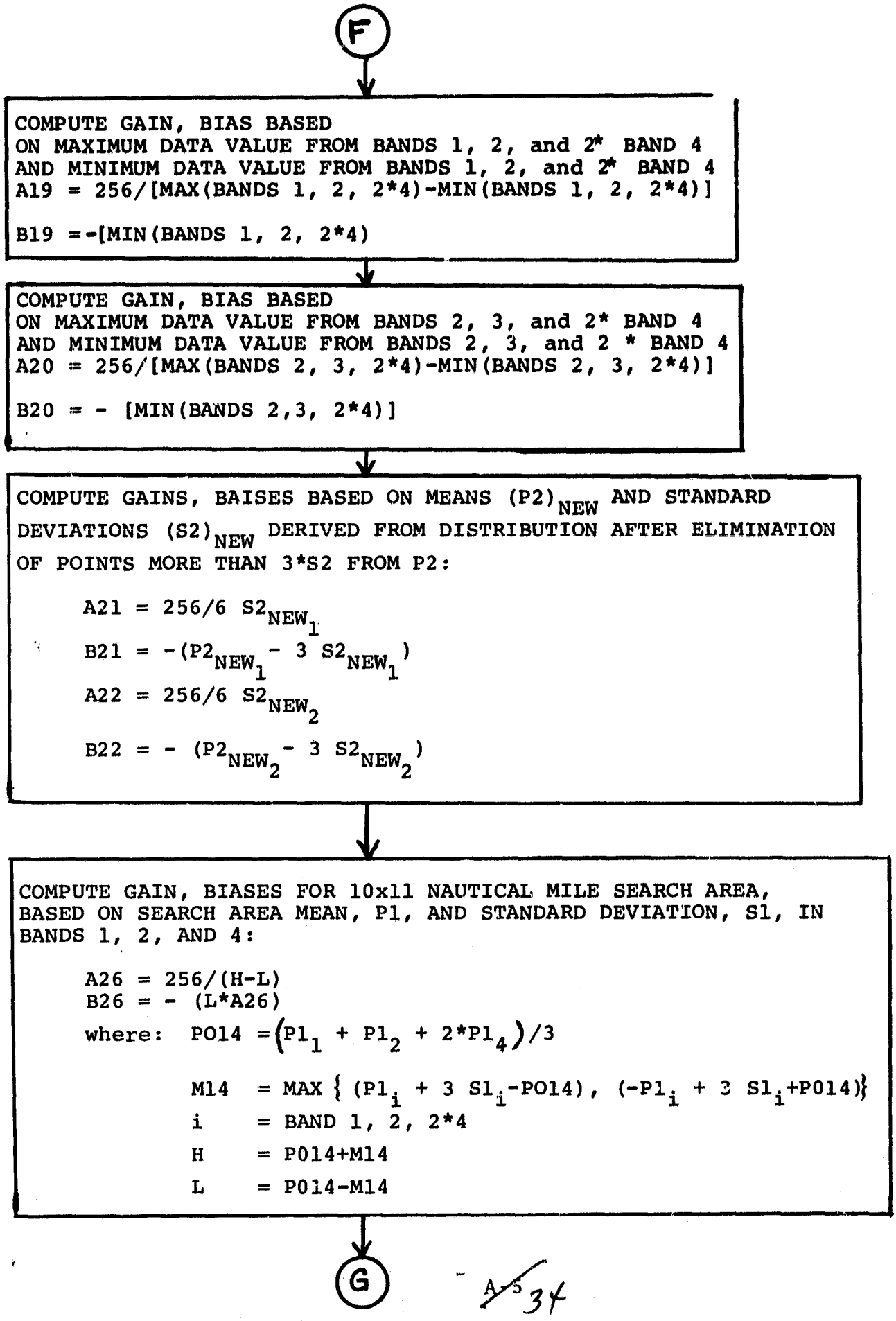
F
COMPUTE GAIN, BIAS BASED
ON MAXIMUM DATA VALUE FROM BANDS 1, 2, and 2* BAND 4
AND MINIMUM DATA VALUE FROM BANDS 1, 2, and 2* BAND 4
A19 = 256/[MAX(BANDS 1, 2, 2*4)-MIN(BANDS 1, 2, 2*4)]
B19 =-[MIN(BANDS 1, 2, 2*4)
COMPUTE GAIN, BIAS BASED
ON MAXIMUM DATA VALUE FROM BANDS 2, 3, and 2* BAND 4
AND MINIMUM DATA VALUE FROM BANDS 2, 3, and 2 * BAND 4
A20 = 256/[MAX(BANDS 2, 3, 2*4)-MIN(BANDS 2, 3, 2*4)]
B20 = - [MIN(BANDS 2,3, 2*4)]
COMPUTE GAINS, BAISES BASED ON MEANS (P2)NEW AND STANDARD DEVIATIONS (S2)NEW DERIVED FROM DISTRIBUTION AFTER ELIMINATION OF POINTS MORE THAN 3*S2 FROM P2:
A21 = 256/6 S2NEW1
B21 = -(P2NEW1 - 3 S2NEW1)
A22 = 256/6 S2NEW2
B22 = - (P2NEW2 - 3 S2NEW2)
COMPUTE GAIN, BIASES FOR 10x11 NAUTICAL MILE SEARCH AREA, BASED ON SEARCH AREA MEAN, P1, AND STANDARD DEVIATION, S1, IN BANDS 1, 2, AND 4:
A26 = 256/(H-L)
B26 = - (L*A26)
where: PO14 = (P1 1 + P1 2 + 2*P1 4)/3
M14 = MAX { (P1 i + 3 S1 i-PO14), (-P1 i + 3 S1 i+P014)}
i = BAND 1, 2, 2*4
H = P014+M14
L = P014-M14
G

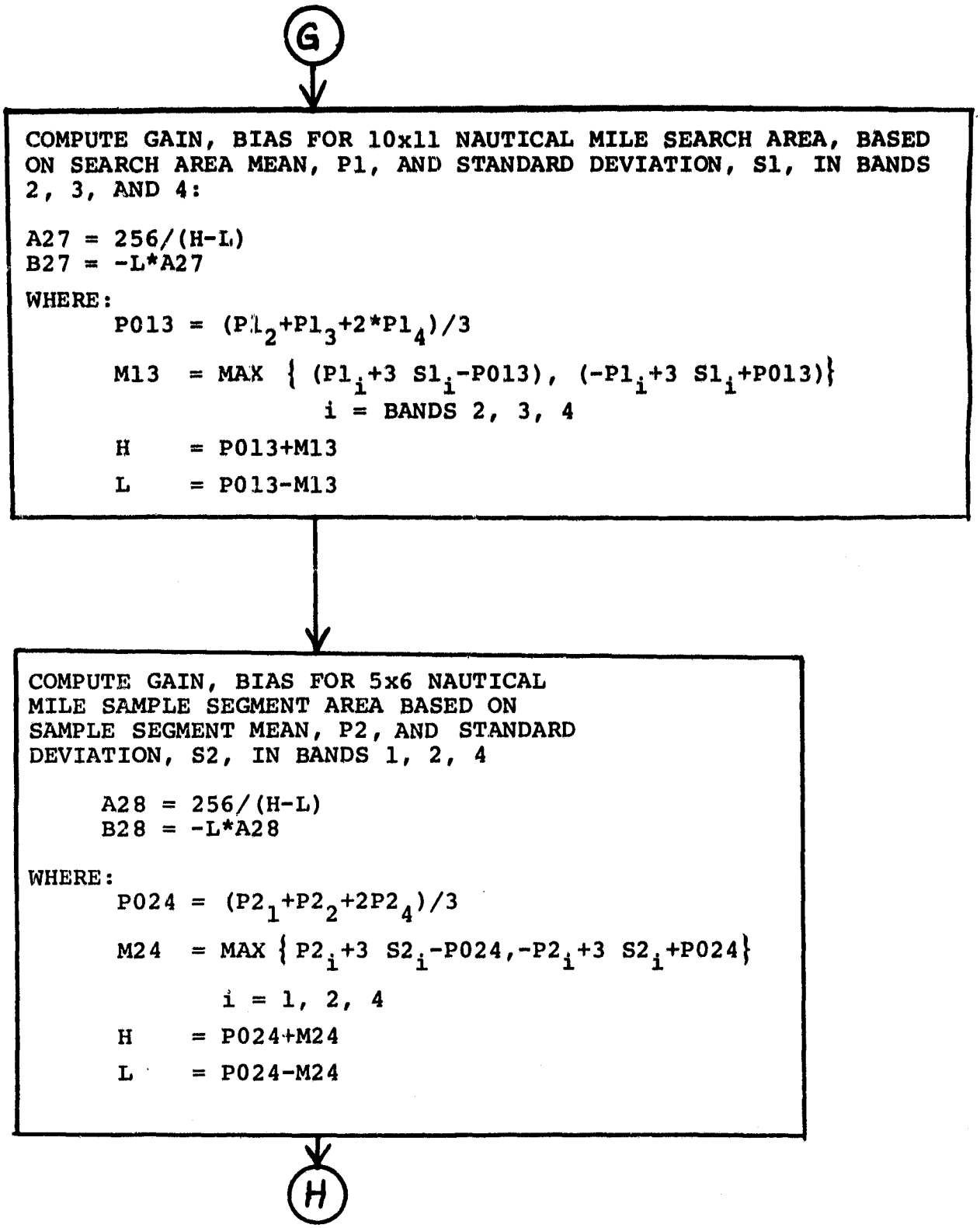
G
COMPUTE GAIN, BIAS FOR 10x11 NAUTICAL MILE SEARCH AREA, BASED ON SEARCH AREA MEAN, P1, AND STANDARD DEVIATION, S1, IN BANDS 2, 3, AND 4:
A27 = 256/(H-L)
B27 = -L*A27
WHERE:
P013 = (P1$_2$+P1$_3$+2*P1$_4$)/3
M13 = MAX { (P1$_i$+3 S1$_i$-P013), (-P1$_i$+3 S1$_i$+P013)}
i = BANDS 2, 3, 4
H = P013+M13
L = P013-M13
COMPUTE GAIN, BIAS FOR 5x6 NAUTICAL MILE SAMPLE SEGMENT AREA BASED ON SAMPLE SEGMENT MEAN, P2, AND STANDARD DEVIATION, S2, IN BANDS 1, 2, 4
A28 = 256/(H-L)
B28 = -L*A28
WHERE:
P024 = (P2$_1$+P2$_2$+2P2$_4$)/3
M24 = MAX { P2$_i$+3 S2$_i$-P024,-P2$_i$+3 S2$_i$+P024}
i = 1, 2, 4
H = P024+M24
L = P024-M24
H

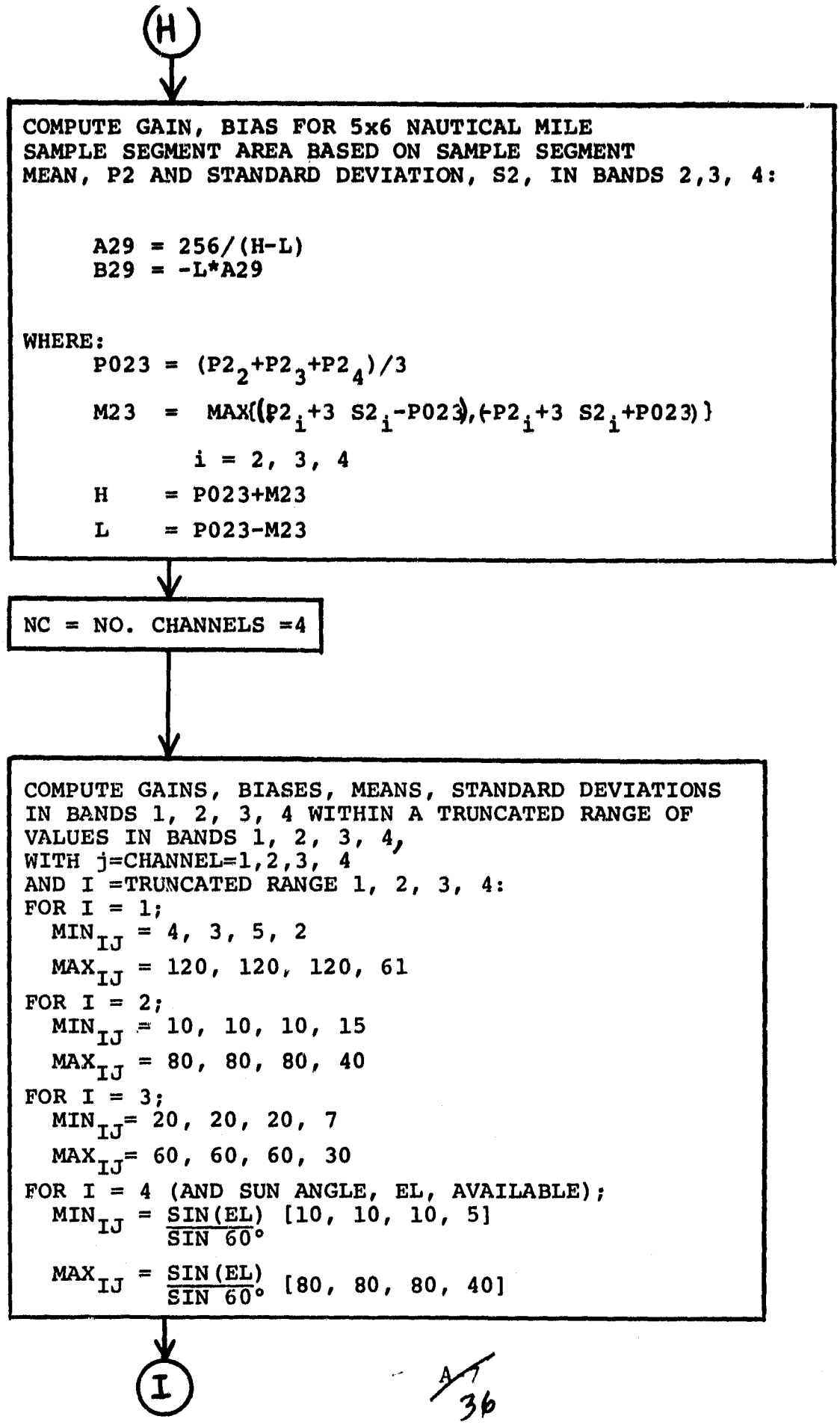
(H)
COMPUTE GAIN, BIAS FOR 5x6 NAUTICAL MILE
SAMPLE SEGMENT AREA BASED ON SAMPLE SEGMENT
MEAN, P2 AND STANDARD DEVIATION, S2, IN BANDS 2,3, 4:
A29 = 256/(H-L)
B29 = -L*A29
WHERE:
P023 = (P2$_2$+P2$_3$+P2$_4$)/3
M23 = MAX{(P2$_i$+3 S2$_i$-P023),(-P2$_i$+3 S2$_i$+P023)}
i = 2, 3, 4
H = P023+M23
L = P023-M23
NC = NO. CHANNELS =4
COMPUTE GAINS, BIASES, MEANS, STANDARD DEVIATIONS
IN BANDS 1, 2, 3, 4 WITHIN A TRUNCATED RANGE OF
VALUES IN BANDS 1, 2, 3, 4,
WITH j=CHANNEL=1,2,3, 4
AND I =TRUNCATED RANGE 1, 2, 3, 4:
FOR I = 1;
MIN$_{IJ}$ = 4, 3, 5, 2
MAX$_{IJ}$ = 120, 120, 120, 61
FOR I = 2;
MIN$_{IJ}$ = 10, 10, 10, 15
MAX$_{IJ}$ = 80, 80, 80, 40
FOR I = 3;
MIN$_{IJ}$= 20, 20, 20, 7
MAX$_{IJ}$= 60, 60, 60, 30
FOR I = 4 (AND SUN ANGLE, EL, AVAILABLE);
MIN$_{IJ}$ = SIN(EL)/SIN 60° [10, 10, 10, 5]
MAX$_{IJ}$ = SIN(EL)/SIN 60° [80, 80, 80, 40]
(I)

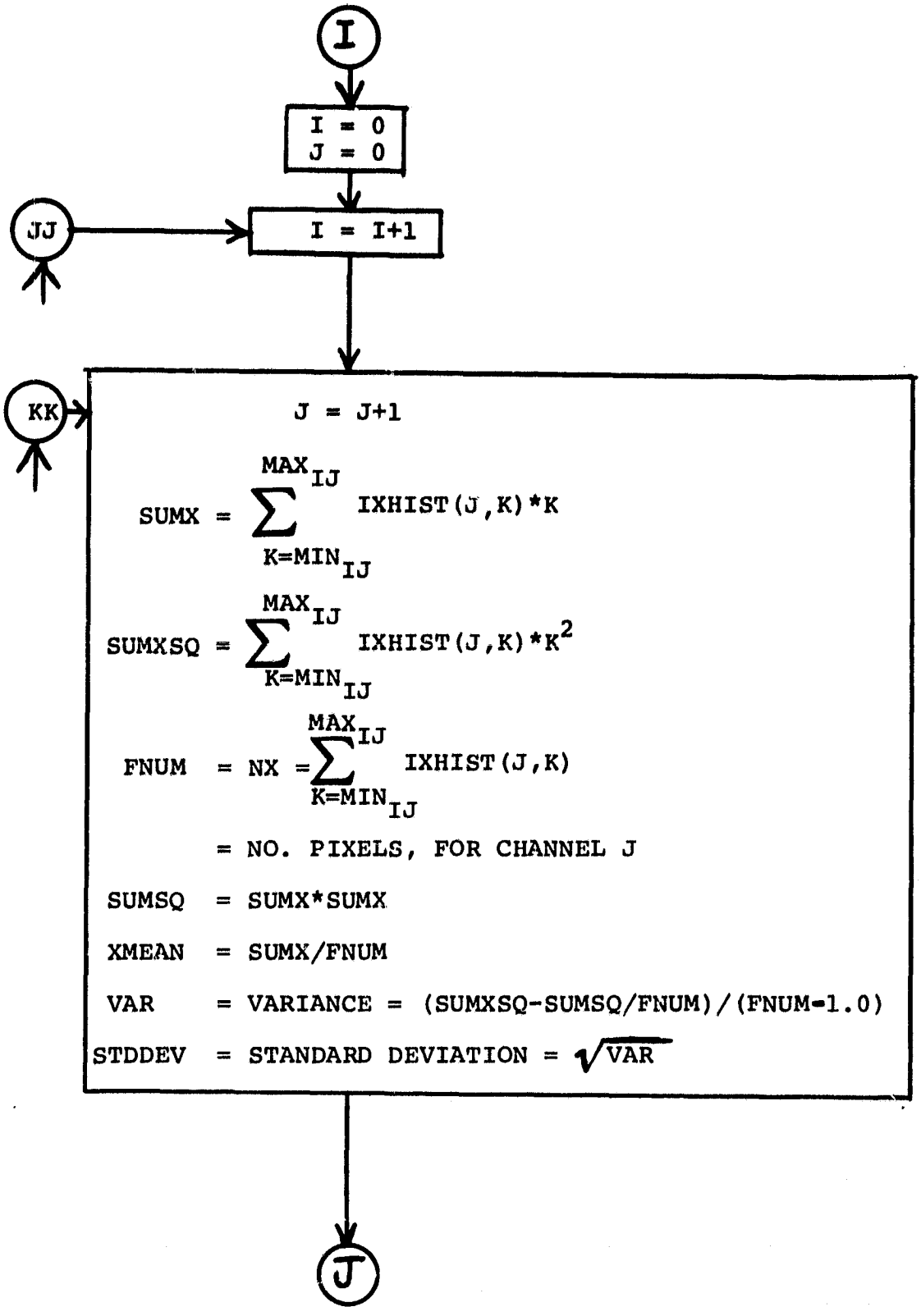
I
I = 0
J = 0
JJ
I = I+1
KK
J = J+1
SUMX = $\sum_{K=MIN_{IJ}}^{MAX_{IJ}}$ IXHIST(J,K)*K
SUMXSQ = $\sum_{K=MIN_{IJ}}^{MAX_{IJ}}$ IXHIST(J,K)*K^2
FNUM = NX = $\sum_{K=MIN_{IJ}}^{MAX_{IJ}}$ IXHIST(J,K)
= NO. PIXELS, FOR CHANNEL J
SUMSQ = SUMX*SUMX
XMEAN = SUMX/FNUM
VAR = VARIANCE = (SUMXSQ-SUMSQ/FNUM)/(FNUM-1.0)
STDDEV = STANDARD DEVIATION = $\sqrt{VAR}$
J

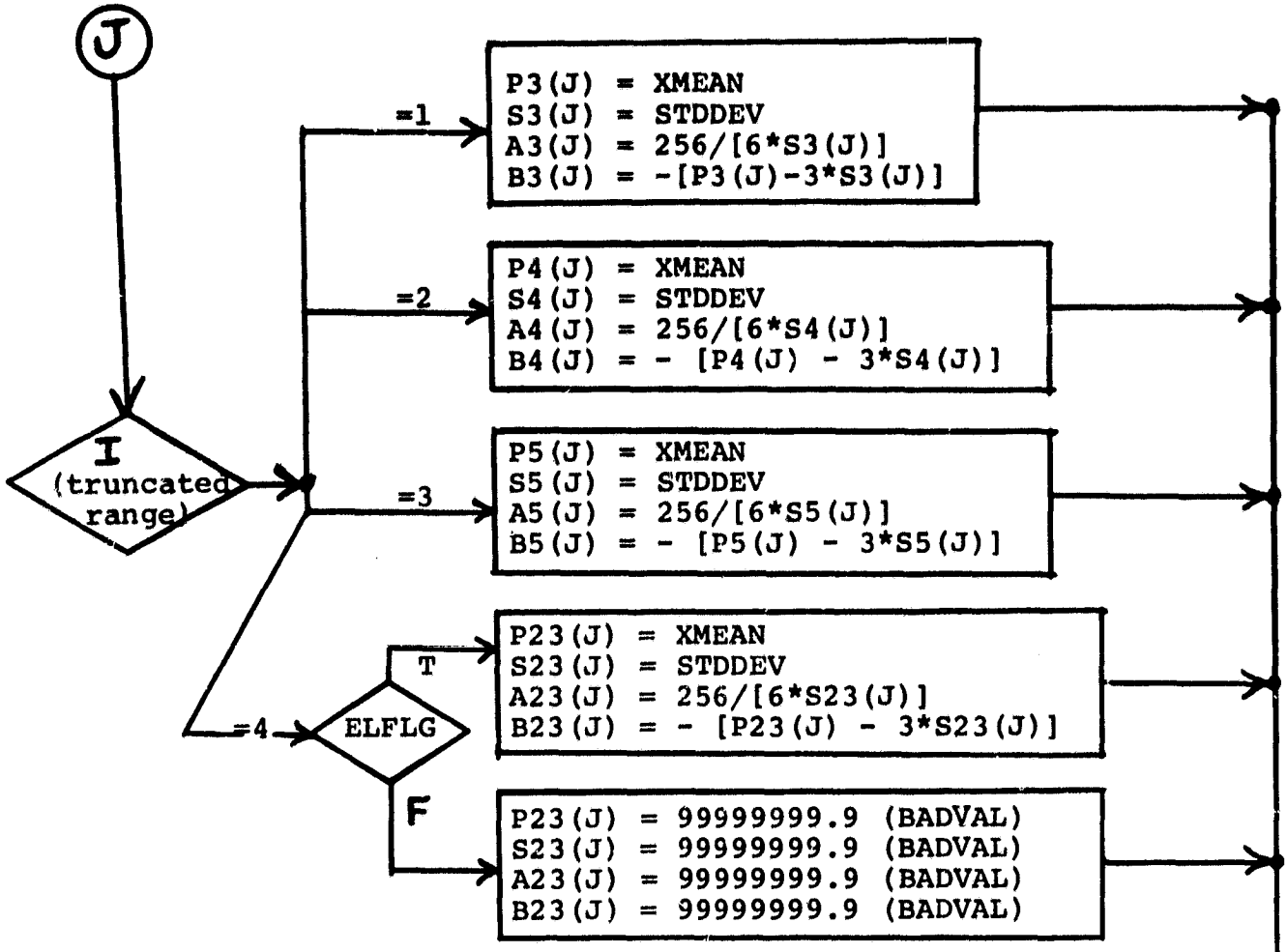

COMPUTE 3σ, 2.5σ, 2.0σ GAINS AND BIASES (A8, B8, A14, B14, A15, B15, A16, B16, A17, B17, A18, B18):

$NUMX_i$ = TOTAL NO. PIXELS IN CHANNEL i

$GSC_k = GSCALE_k$, k = 1,...,6

= .00135, .00655, .0225, .00135, .00655, .0229

$BSC_k = BSCALE_k$, k = 1, ..., 6

= .00135, .00655, .0225, .49865 .49345, .4771

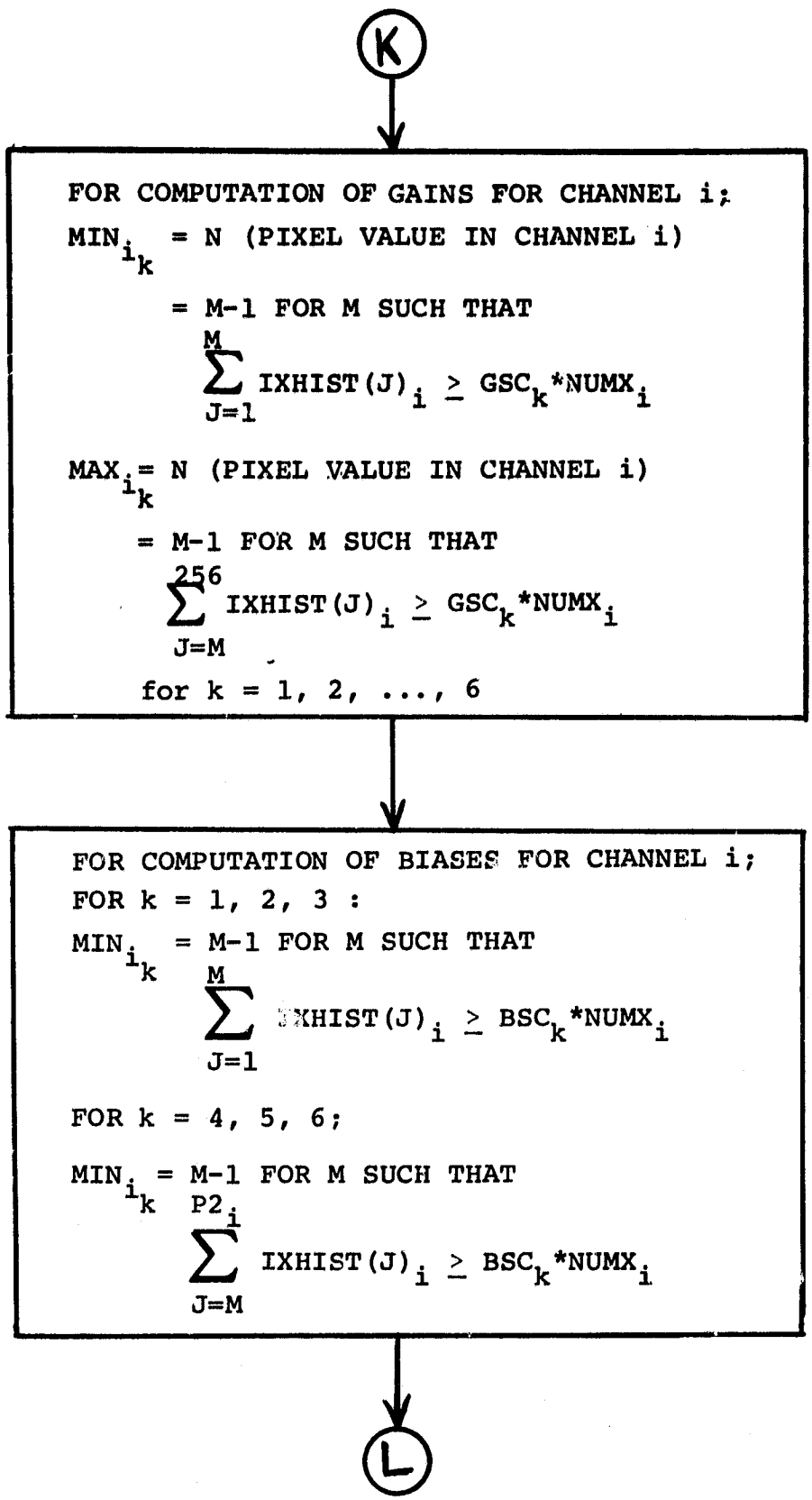
K
FOR COMPUTATION OF GAINS FOR CHANNEL i;
MIN_{i_k} = N (PIXEL VALUE IN CHANNEL i)
= M-1 FOR M SUCH THAT
$\sum_{J=1}^{M} IXHIST(J)_i \geq GSC_k * NUMX_i$
MAX_{i_k} = N (PIXEL VALUE IN CHANNEL i)
= M-1 FOR M SUCH THAT
$\sum_{J=M}^{256} IXHIST(J)_i \geq GSC_k * NUMX_i$
for k = 1, 2, ..., 6
FOR COMPUTATION OF BIASES FOR CHANNEL i;
FOR k = 1, 2, 3 :
MIN_{i_k} = M-1 FOR M SUCH THAT
$\sum_{J=1}^{M} IXHIST(J)_i \geq BSC_k * NUMX_i$
FOR k = 4, 5, 6;
MIN_{i_k} = M-1 FOR M SUCH THAT
$\sum_{J=M}^{P2_i} IXHIST(J)_i \geq BSC_k * NUMX_i$
L

3.0, 2.5, 2.0σ GAINS:

$$A8_i = 256/(MAX_{i_1} - MIN_{i_1})$$

= 3σ GAIN, CHANNEL i

$$A14_i = 256/(MAX_{i_2} - MIN_{i_2})$$

= 2.5σ GAIN, CHANNEL i

$$A15_i = 256/(MAX_{i_3} - MIN_{i_3})$$

= 2.0σ GAIN, CHANNEL i

$$A16_i = 256/(MAX_{i_4} - MIN_{i_4})$$

= 3.0σ GAIN, CHANNEL i

$$A17_i = 256/(MAX_{i_5} - MIN_{i_5})$$

= 2.5σ GAIN, CHANNEL i

$$A18_i = 256/(MAX_{i_6} - MIN_{i_6})$$

= 2.0σ GAIN, CHANNEL i

3.0,2.5,2.0σ BIASES:

$$B8_i = - MIN_{i_1}$$

$$B14_i = - MIN_{i_2}$$

$$B15_i = - MIN_{i_3}$$

$$B16_i = - MIN_{i_4}$$

$$B17_i = -MIN_{i_5}$$

$$B18_i = - MIN_{i_6}$$

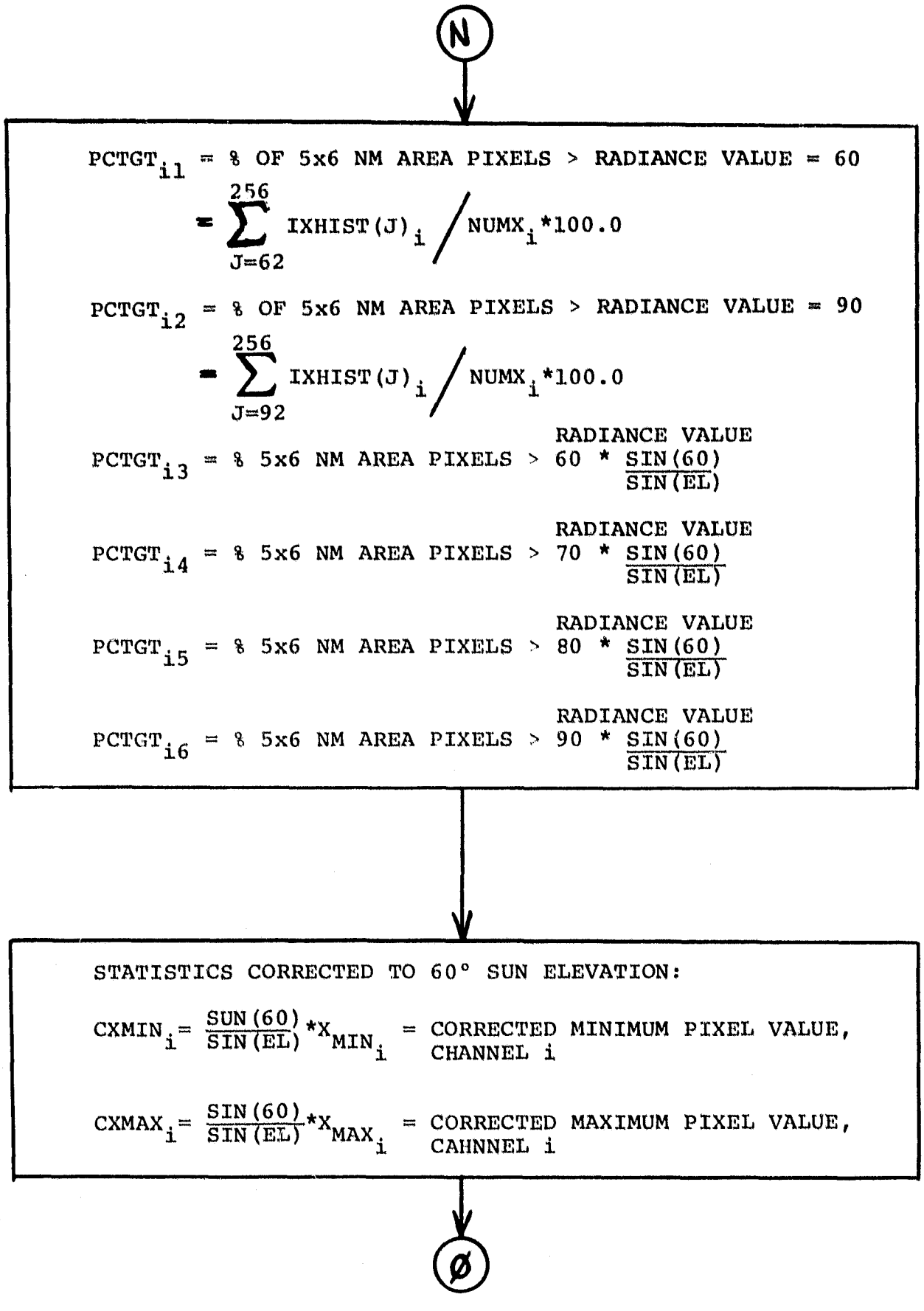
N
PCTGT$_{i1}$ = % OF 5x6 NM AREA PIXELS > RADIANCE VALUE = 60
$= \sum_{J=62}^{256} IXHIST(J)_i \Big/ NUMX_i * 100.0$
PCTGT$_{i2}$ = % OF 5x6 NM AREA PIXELS > RADIANCE VALUE = 90
$= \sum_{J=92}^{256} IXHIST(J)_i \Big/ NUMX_i * 100.0$
PCTGT$_{i3}$ = % 5x6 NM AREA PIXELS > 60 * RADIANCE VALUE SIN(60) / SIN(EL)
PCTGT$_{i4}$ = % 5x6 NM AREA PIXELS > 70 * RADIANCE VALUE SIN(60) / SIN(EL)
PCTGT$_{i5}$ = % 5x6 NM AREA PIXELS > 80 * RADIANCE VALUE SIN(60) / SIN(EL)
PCTGT$_{i6}$ = % 5x6 NM AREA PIXELS > 90 * RADIANCE VALUE SIN(60) / SIN(EL)
STATISTICS CORRECTED TO 60° SUN ELEVATION:
CXMIN$_i$ = SUN(60) / SIN(EL) * X$_{MIN_i}$ = CORRECTED MINIMUM PIXEL VALUE, CHANNEL i
CXMAX$_i$ = SIN(60) / SIN(EL) * X$_{MAX_i}$ = CORRECTED MAXIMUM PIXEL VALUE, CAHNNEL i
Ø

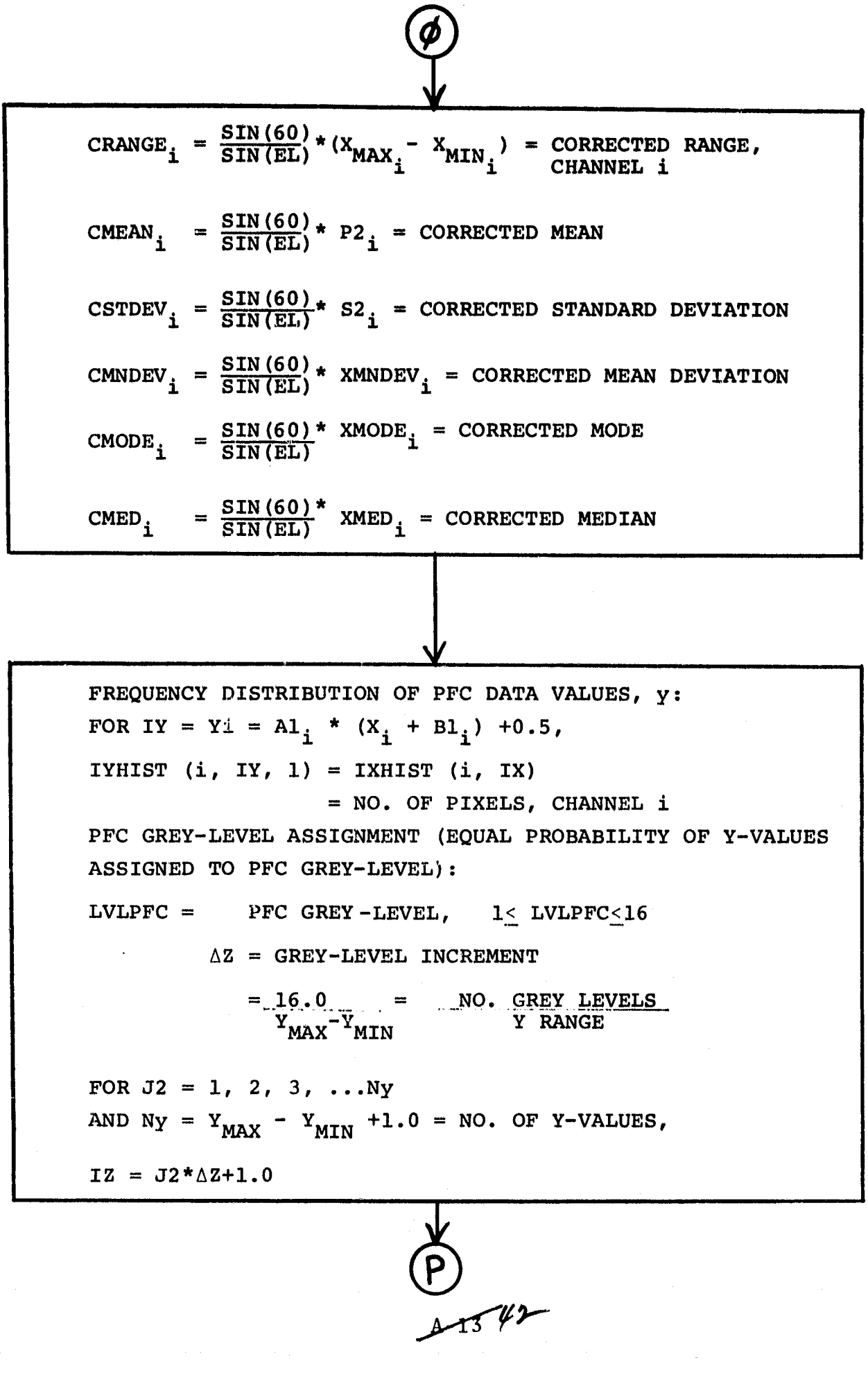
ϕ
$CRANGE_i = \frac{SIN(60)}{SIN(EL)} * (X_{MAX_i} - X_{MIN_i})$ = CORRECTED RANGE, CHANNEL i
$CMEAN_i = \frac{SIN(60)}{SIN(EL)} * P2_i$ = CORRECTED MEAN
$CSTDEV_i = \frac{SIN(60)}{SIN(EL)} * S2_i$ = CORRECTED STANDARD DEVIATION
$CMNDEV_i = \frac{SIN(60)}{SIN(EL)} * XMNDEV_i$ = CORRECTED MEAN DEVIATION
$CMODE_i = \frac{SIN(60)}{SIN(EL)} * XMODE_i$ = CORRECTED MODE
$CMED_i = \frac{SIN(60)}{SIN(EL)} * XMED_i$ = CORRECTED MEDIAN
FREQUENCY DISTRIBUTION OF PFC DATA VALUES, y:
FOR IY = $Yi = Al_i * (X_i + Bl_i) + 0.5$,
IYHIST (i, IY, 1) = IXHIST (i, IX)
= NO. OF PIXELS, CHANNEL i
PFC GREY-LEVEL ASSIGNMENT (EQUAL PROBABILITY OF Y-VALUES ASSIGNED TO PFC GREY-LEVEL):
LVLPFC = PFC GREY-LEVEL, $1 \leq LVLPFC \leq 16$
ΔZ = GREY-LEVEL INCREMENT
$= \frac{16.0}{Y_{MAX} - Y_{MIN}} = \frac{\text{NO. GREY LEVELS}}{\text{Y RANGE}}$
FOR J2 = 1, 2, 3, ...Ny
AND $Ny = Y_{MAX} - Y_{MIN} + 1.0$ = NO. OF Y-VALUES,
$IZ = J2 * \Delta Z + 1.0$
P

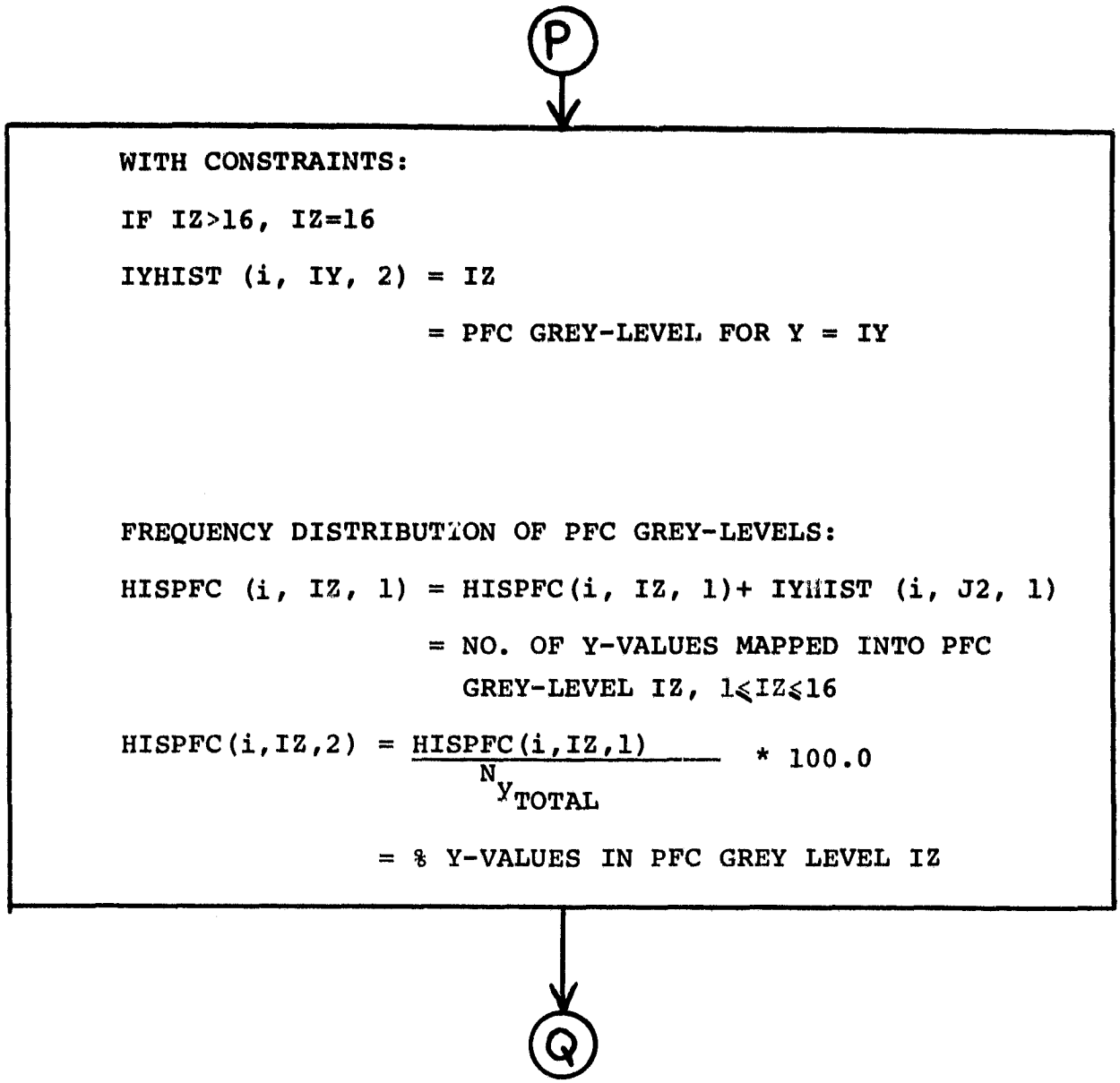
P
WITH CONSTRAINTS:
IF IZ>16, IZ=16
IYHIST (i, IY, 2) = IZ
= PFC GREY-LEVEL FOR Y = IY
FREQUENCY DISTRIBUTION OF PFC GREY-LEVELS:
HISPFC (i, IZ, 1) = HISPFC(i, IZ, 1)+ IYHIST (i, J2, 1)
= NO. OF Y-VALUES MAPPED INTO PFC GREY-LEVEL IZ, 1≤IZ≤16
HISPFC(i,IZ,2) = HISPFC(i,IZ,1) / N_y TOTAL * 100.0
= % Y-VALUES IN PFC GREY LEVEL IZ
Q

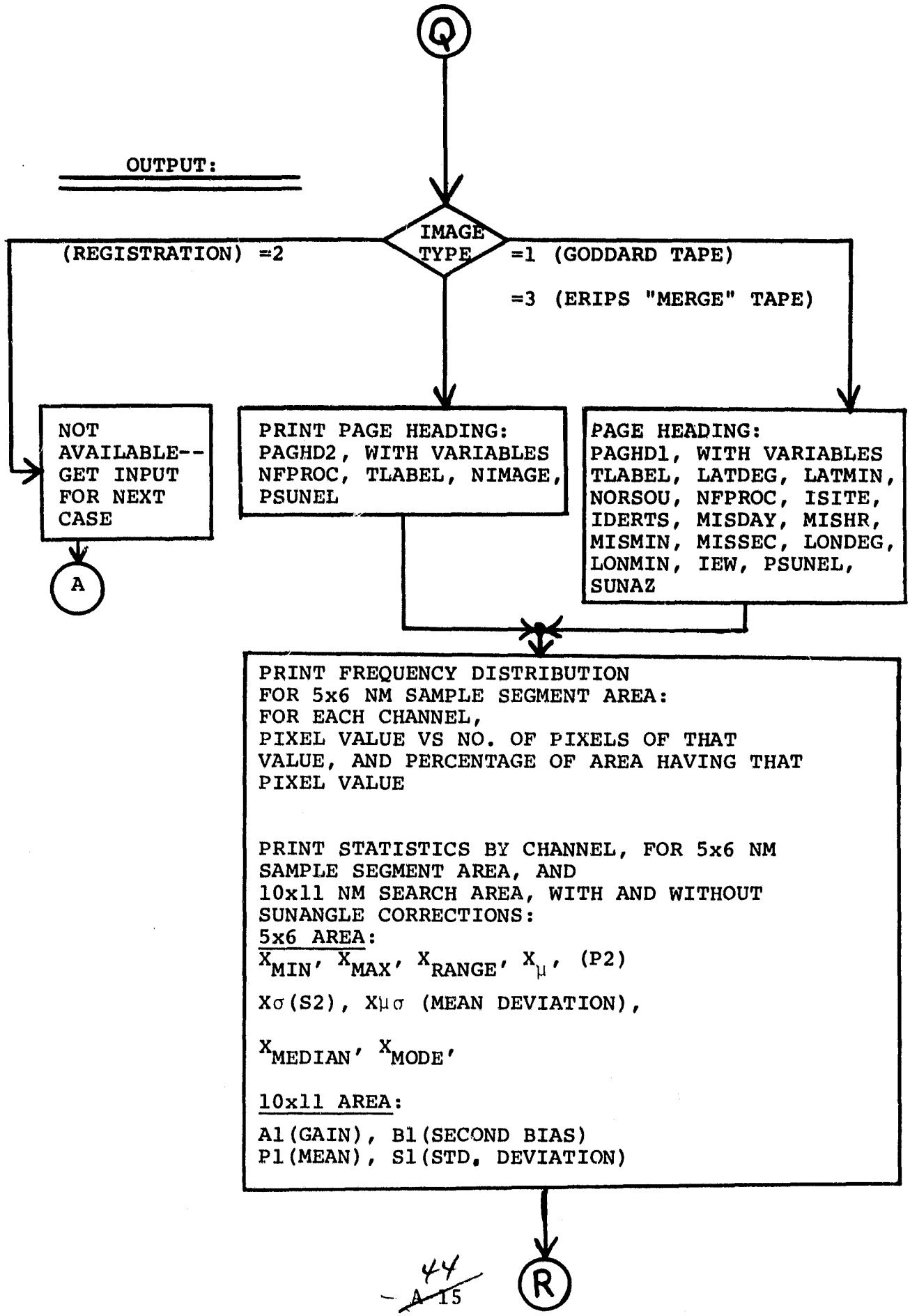
Q
OUTPUT:
IMAGE TYPE
(REGISTRATION) =2
=1 (GODDARD TAPE)
=3 (ERIPS "MERGE" TAPE)
NOT AVAILABLE--GET INPUT FOR NEXT CASE
A
PRINT PAGE HEADING: PAGHD2, WITH VARIABLES NFPROC, TLABEL, NIMAGE, PSUNEL
PAGE HEADING: PAGHD1, WITH VARIABLES TLABEL, LATDEG, LATMIN, NORSOU, NFPROC, ISITE, IDERTS, MISDAY, MISHR, MISMIN, MISSEC, LONDEG, LONMIN, IEW, PSUNEL, SUNAZ
PRINT FREQUENCY DISTRIBUTION FOR 5x6 NM SAMPLE SEGMENT AREA: FOR EACH CHANNEL, PIXEL VALUE VS NO. OF PIXELS OF THAT VALUE, AND PERCENTAGE OF AREA HAVING THAT PIXEL VALUE
PRINT STATISTICS BY CHANNEL, FOR 5x6 NM SAMPLE SEGMENT AREA, AND 10x11 NM SEARCH AREA, WITH AND WITHOUT SUNANGLE CORRECTIONS:
5x6 AREA:
X_{MIN}, X_{MAX}, X_{RANGE}, X_{μ}, (P2)
$X\sigma$(S2), $X\mu\sigma$ (MEAN DEVIATION),
X_{MEDIAN}, X_{MODE},
10x11 AREA:
A1(GAIN), B1(SECOND BIAS)
P1(MEAN), S1(STD. DEVIATION)
R

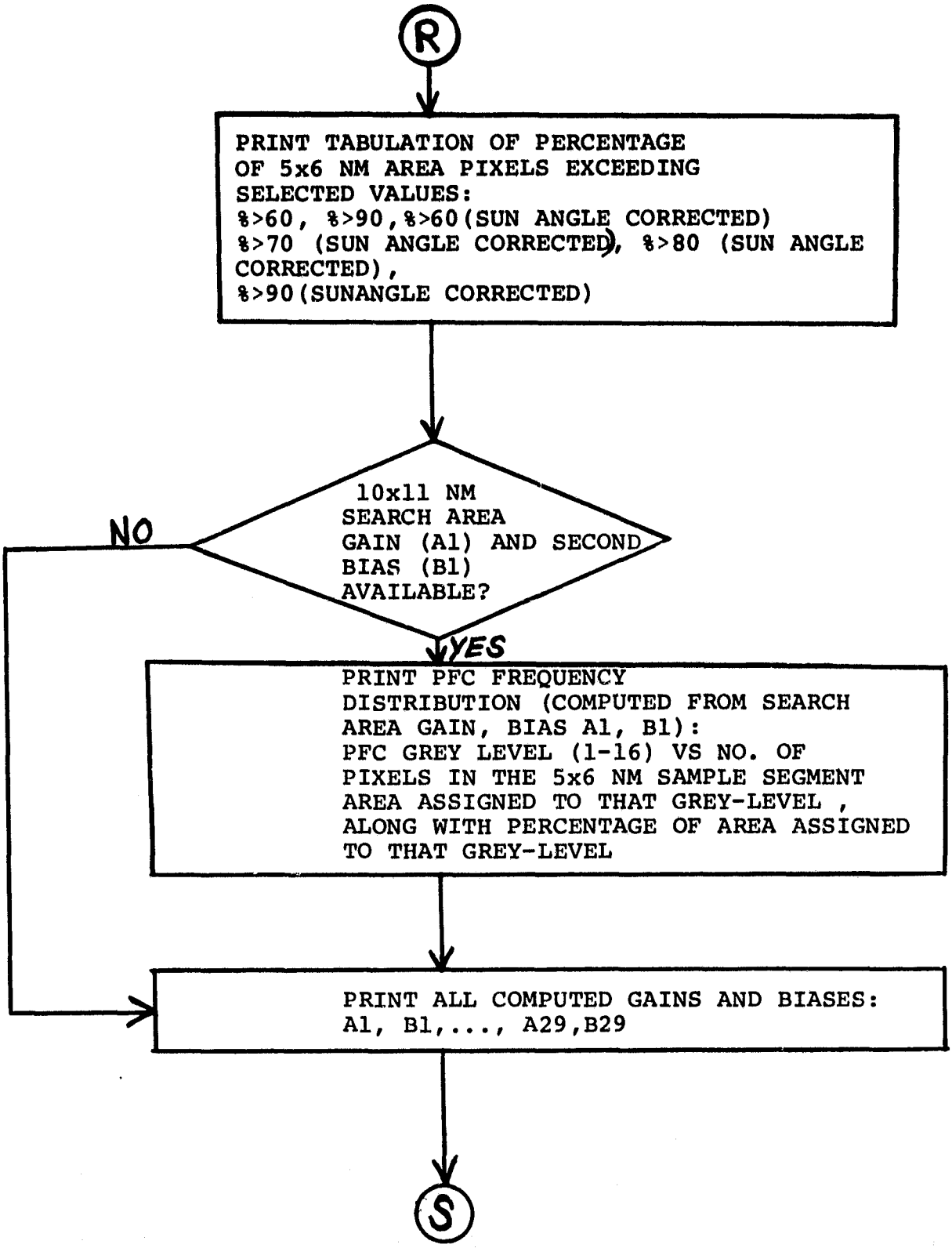
R
PRINT TABULATION OF PERCENTAGE OF 5x6 NM AREA PIXELS EXCEEDING SELECTED VALUES:
%>60, %>90, %>60 (SUN ANGLE CORRECTED)
%>70 (SUN ANGLE CORRECTED), %>80 (SUN ANGLE CORRECTED),
%>90 (SUNANGLE CORRECTED)
10x11 NM SEARCH AREA GAIN (A1) AND SECOND BIAS (B1) AVAILABLE?
NO
YES
PRINT PFC FREQUENCY DISTRIBUTION (COMPUTED FROM SEARCH AREA GAIN, BIAS A1, B1):
PFC GREY LEVEL (1-16) VS NO. OF PIXELS IN THE 5x6 NM SAMPLE SEGMENT AREA ASSIGNED TO THAT GREY-LEVEL, ALONG WITH PERCENTAGE OF AREA ASSIGNED TO THAT GREY-LEVEL
PRINT ALL COMPUTED GAINS AND BIASES:
A1, B1,..., A29,B29
S

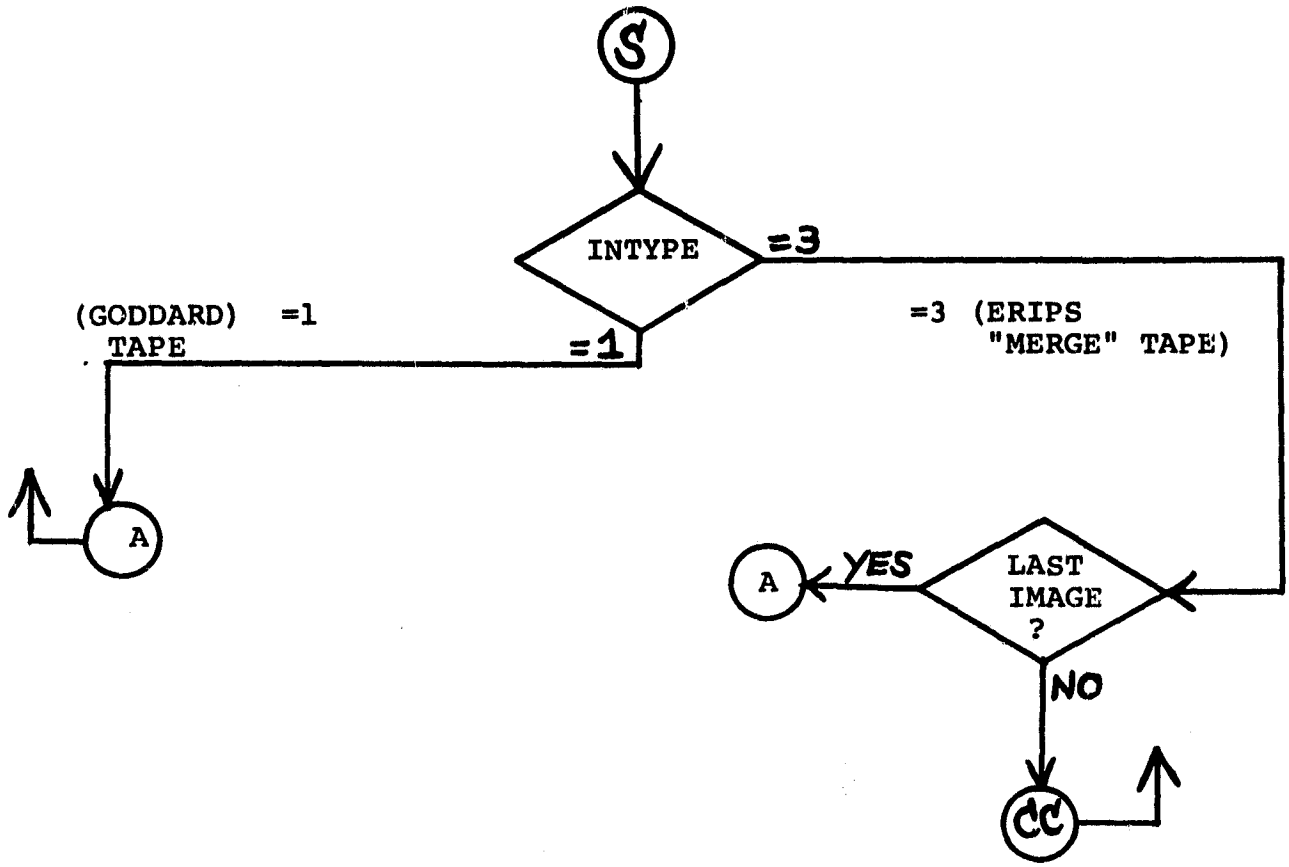
S
INTYPE
=3
=1
(GODDARD) =1
TAPE
=3 (ERIPS
"MERGE" TAPE)
A
A
YES
LAST
IMAGE
?
NO
CC

APPENDIX B

PFCGAB PROGRAM LISTINGS

```
@ FOR,•   PFCGAB,PFCGAB                                        26 OCT 76          18:50:16.867
UNIVAC 1108 FORTRAN V EXEC II LEVEL 28A  -(EXECH LEVEL E1201001OA)
THIS COMPILATION WAS DONE ON 26 OCT 76 AT 18:50:16

   MAIN PROGRAM

   STORAGE USED: CODE(1) 004053; DATA(0) 014361; BLANK COMMON(2) 000000

    COMMON BLOCKS:

    0003    PGLABL 000075
    0004    ST5X6  000110
    0005    ST1011 000020
    0006    STCOMP 000374
    0007    HDATA  000026
    0010    FREQ   004010
    0011    PRCENT 000036
    0012    PFCH   000200
    0013    ALL    000012

   EXTERNAL REFERENCES (BLOCK, NAME)

    0014    TAPLAB
    0015    TAPHDR
    0016    FLDINT
    0017    LINERD
    0020    PRXHIS
    0021    PRSTAT
    0022    PRPCT
    0023    PFCHIS
    0024    PRGAB
    0025    NRNL$
    0026    SIN
    0027    NWDU$
    0030    NIO2$
    0031    SQRT
    0032    NERR2$
    0033    NSTOP$

   STORAGE ASSIGNMENT  (BLOCK, TYPE, RELATIVE LOCATION, NAME)

    0001  000055 10L     0001  004047 1000L   0001  001712 1023G   0001  001732 1027G   0001  002033 1051G
    0001  000623 111L    0001  002256 1127G   0001  002274 1133G   0001  000664 115L    0001  002372 1157G
    0001  000734 120L    0001  002576 1237G   0001  002617 1244G   0001  002677 1261G   0001  002731 1273G
    0001  000757 130L    0001  003040 1322G   0001  003164 1365G   0001  001005 140L    0001  003232 1400G
    0001  003253 1406G   0001  003271 1414G   0001  003320 1432G   0001  003363 1451G   0001  003421 1457G
    0001  001007 150L    0001  003507 1502G   0001  003537 1514G   0001  003623 1536G   0001  003675 1554G
    0001  001151 160L    0001  001167 170L    0001  001261 180L    0001  000131 20L     0001  000223 2001L
    0001  002362 201L    0001  002424 205L    0001  000256 21L     0001  002464 210L    0001  002502 214L
    0001  000022 227G    0001  002520 239L    0001  002536 235L    0001  002555 236L    0001  002566 240L
    0001  002720 265L    0001  000356 27L     0001  002752 260L    0001  000403 29L     0001  002762 290L
    0001  000417 2902L   0001  002765 291L    0001  003060 293L    0001  003076 294L    0001  003104 295L
    0001  003112 296L    0001  003120 297L    0001  003126 298L    0001  003134 299L    0001  003141 300L
    0001  003201 310L    0001  003204 320L    0001  003221 330L    0001  000313 345G    0001  000320 353G
    0001  000324 360G    0001  000336 367G    0001  003351 385L    0001  003476 400L    0001  000367 404G
    0001  000411 415G    0001  003522 420L    0001  000434 426G    0001  000454 435G    0001  003552 440L

                                        B-1
```

```
0001    000464  442G    0001    003712  475L    0001    000556  477G    0001    003713  480L    0001    004030  490L
0001    000017  5L      0001    004033  500L    0001    004036  510L    0001    000627  514G    0001    004041  520L
0001    004044  530L    0001    000702  541G    0001    000531  55L     0001    000712  551G    0001    000766  573G
0001    001434  610L    0001    001446  620L    0001    001456  630L    0001    001122  634G    0001    001465  640L
0001    001505  650L    0001    001534  660L    0001    001235  663G    0001    001562  670L    0001    001653  690L
0001    001665  700L    0030    010120  7000F   0001    001676  710L    0001    001336  711G    0001    001357  721G
0001    001401  726G    0001    001710  730L    0001    001741  740L    0001    001765  750L    0001    001471  751G
0001    001474  754G    0001    001770  760L    0001    001576  770G    0001    002002  770L    0001    002007  760L
0001    002013  790L    0001    002063  800L    0001    002070  810L    0001    002074  820L    0001    002106  821L
0001    002114  822L    0001    002140  830L    0001    002160  840L    0001    002170  850L    0001    002200  860L
0001    002210  870L    0001    002220  880L    0001    002230  890L    0001    002237  900L    0000    010162  9000F
0001    002250  910L    0000  R 014217  A       0007  R 000005  AA1     0005  R 000000  A1      0013  L 000010  A101
0006  R 000160  A10     0006  R 000170  A11     0006  R 000200  A12     0006  R 000210  A13     0006  R 000220  A14
0006  R 000230  A15     0006  R 000240  A16     0006  R 000250  A17     0006  R 000260  A18     0006  R 000270  A19
0004  R 000000  A2      0006  R 000272  A20     0006  R 000274  A21     0006  R 000304  A22     0006  R 000314  A23
0006  R 000334  A24     0006  R 000344  A25     0006  R 000354  A26     0006  R 000356  A27     0006  R 000360  A28
0006  R 000362  A29     0006  R 000040  A3      0006  R 000060  A4      0006  R 000100  A5      0006  R 000120  A6
0006  R 000130  A7      0006  R 000140  A8      0006  R 000150  A9      0000  R 014257  B       0006  R 007727  BADVAL
0000  R 014257  BIAS    0000  R 007732  BLANK   0000  I 000004  BLOCK   0007  R 000002  B0      0000  R 010025  BSC
0000  R 007700  BSCALE  0005  R 000004  B1      0006  R 000164  B10     0006  R 000174  B11     0006  R 000204  B12
0006  R 000214  B13     0006  R 000224  B14     0006  R 000234  B15     0006  R 000244  B16     0006  R 000254  B17
0006  R 000264  B18     0006  R 000271  B19     0004  R 000004  B2      0006  R 000273  B20     0006  R 000300  B21
0006  R 000310  B22     0006  R 000320  B23     0006  R 000340  B24     0006  R 000350  B25     0006  R 000355  B26
0006  R 000357  B27     0006  R 000361  B28     0006  R 000363  B29     0006  R 000044  B3      0006  R 000064  B4
0006  R 000104  B5      0006  R 000124  B6      0006  R 000134  B7      0006  R 000144  B8      0006  R 000154  B9
0000    010063  CARDIN  0000  R 007747  CFACT   0013  I 000004  CHVEC   0000  R 007750  CINV    0004  R 000064  CMEAN
0004  R 000100  CMED    0004  R 000074  CMNDEV  0004  R 000104  CMODE   0004  R 000060  CRANGE  0004  R 000070  CSTDEV
0004  R 000054  CXMAX   0004  R 000050  CXMIN   0000  R 007740  DGTORD  0000  I 000061  EL      0013  L 000011  ELFLG
0000  I 000016  EOFSKP  0000  R 010054  FINC    0000  R 010010  FLK     0000  R 010042  FMAX    0000  R 010040  FMIN
0000  R 010017  FNMI    0000  R 010052  FNPFC   0000  R 010016  FNTOT   0000  R 010000  FNUM    0000  R 010012  FNX
0000  R 010053  FNY     0000  R 010051  FPFC    0000  I 000003  FSTART  0000  R 007744  FSUNEL  0000  R 010041  FTOTAL
0000  R 014217  GAIN    0000  R 010024  GSC     0000  R 007672  GSCALE  0000  I 000001  GSFCTP  0012  R 000000  HISPFC
0012  R 000000  HPFC    0000  I 007741  I       0000  I 007743  IABFLG  0006  I 000364  ICA     0006  I 000370  ICB
0000  I 007654  ICUT    0000  I 000076  IDATA   0007  I 000013  IDERTS  0007  I 000021  IE#     0000  I 010022  II
0000  I 007753  IMTOT   0013  I 000000  INTYPE  0000  I 007736  INUNIT  0000  I 007767  IPIX    0007  I 000012  ISITE
0000  I 007775  IX      0010  I 000000  IXH     0010  I 000000  IXHIST  0000  I 007776  IXSG    0000  I 010045  IY
0000  I 010207  IYH     0000  I 010207  IYHIST  0000  I 007762  J       0000  I 007761  JJ      0000  I 010047  JJI
0000  I 010046  JI      0030  I 010056  J2      0000  I 010060  J3      0000  I 007745  K       0000  I 010020  KK
0000  I 010023  L       0030  I 007742  LASTF   0007  I 000022  LATDEG  0007  I 000023  LATMIN  0000  I 007755  LEND
0000  I 007756  LINC    0000  I 007763  LINCNT  0007  I 000024  LONDEG  0007  I 000025  LONMIN  0000  I 007754  LSTART
0000  I 010057  LVLPFC  0030  I 000000  MAX     0000  I 007737  MAXCH   0000  I 007751  MAXPIX  0000  I 007772  MAXVAL
0000  I 010006  MEDIAN  0000  I 010007  MEDTST  0000  I 007733  MERGTP  0000  I 007752  MINPIX  0011  I 000030  MINTST
0000  I 007773  MINVAL  0007  I 000014  MISDAY  0007  I 000015  MISHR   0007  I 000016  MISMIN  0007  I 000017  MISSEC
0000  I 010004  MODE    0000  I 010005  MODTST  0000  I 010036  NBCUT   0000  I 007764  NBEG    0013  I 000003  NC
0013  I 000002  NCHOUT  0000  I 007734  NFILES  0003  I 000072  NFPROC  0000  I 007777  NHALF   0013  I 000001  NIMAGE
0000  I 007757  NLINES  0000  I 010032  NLT     0007  I 000020  NORSOU  0000  I 007760  NPIXEL  0000  I 010062  NPRINT
0000  I 007766  NPT     0000  I 010026  NRCUT   0000  I 010037  NTEST   0000  I 007735  NUMCH   0000  I 010030  NUMLT
0000  I 010027  NUMUT   0000  I 007774  NUMVAL  0000  I 007662  NUMX    0000  I 007666  NUMY    0000  I 010031  NUT
0000  I 010043  NVAL    0000  I 010011  NX      0000  I 010050  NY      0000  I 000060  OCH     0003  R 000000  PAGM01
0003  R 000053  PAGM02  0000  R 007726  PAGSKP  0000  R 010061  PCT     0011  R 000000  PCTGT   0010  R 002004  PCTX
0000  R 010055  PFCTOT  0000  R 007730  PI      0000  I 000012  PIXEL1  0000  I 000013  PIXEND  0000  I 000014  PIXINC
0003  I 000074  PSUNEL  0005  R 000010  PI      0004  R 000024  P2      0006  R 000324  P23     0006  R 000050  P3
0006  R 000070  P4      0006  R 000110  P5      0000  I 000002  REGTP   0000  R 010035  RNE#    0000  R 007712  SDNE#
0000  R 007746  SINSUN  0000  R 007731  SIN60   0000  R 010021  STDDEV  0000  R 010001  SUM56   0000  R 007770  SUMX
0000  R 007771  SUMXSQ  0007  I 000001  SUNAZ   0007  I 000000  SUNEL   0030  R 007745  SUNRAD  0005  R 000014  SI
0004  R 000030  S2      0036  R 000330  S23     0006  R 000054  S3      0006  R 000074  S4      0006  R 000114  S5
0000  I 000057  TAPFMT  0000  R 010014  TEST1   0000  R 010015  TEST2   0003  I 000073  TLABEL  0000  I 000015  TPEOF
0000  I 000037  TRMAX   0000  I 000017  TRMIN   0006  I 000000  TRUNC   0000  R 010003  VAR     0000  R 010013  X
```

```
0000 R 007716 XHI        0000 R 007722 XLO        0000 R 010033 XLT        0004 R 000014 XMAX       0000 R 010002 XMEAN
0004 R 000040 XMED       0004 R 000010 XMIN       0004 R 000034 XMNDEV     0000 R 007706 XMNEW      0004 R 000044 XMODE
0010 R 002004 XPCT       0004 R 000020 XRANGE     0000 R 010034 XUT        0000 R 010044 Y          0000 R 000066 YMAX
0000 R 000062 YMIN       0000 R 000072 YRANGE
```

```
00101      1•          COMPILER ( DATA=SHORT )
00101      2•    C
00101      3•    C
00103      4•          PARAMETER   MCH=4
00103      5•    C
00105      6•          PARAMETER   NPFC=16, MAXPL1=257, NVTOTL= MCH*MAXPL1
00105      7•    C
00106      8•          PARAMETER  NVTX2 = NVTOTL*2 , NPFCT = MCH*NPFC*2
00106      9•    C
00107     10•          LOGICAL   A1B1 , ELFLG
00110     11•          INTEGER  GSFCTP,REGTP,FSTART,CHVEC,BLOCK,PIXEL1,PIXEND,PIXINC
00110     12•    C
00111     13•          INTEGER  TPEOF, EOFSKP, TRMIN, TRMAX, TRUNC, SUNEL, SUNAZ
00111     14•    C
00112     15•          INTEGER  TAPFMT , OCH , TLABEL , EL , PSUNEL
00112     16•    C
00113     17•          DIMENSION  B1(MCH), A1(MCH),S1(MCH), P1(MCH)
00114     18•          DIMENSION  B2(MCH), A2(MCH), S2(MCH), P2(MCH)
00115     19•          DIMENSION  B3(MCH), A3(MCH), S3(MCH), P3(MCH)
00116     20•          DIMENSION  B4(MCH), A4(MCH), S4(MCH), P4(MCH)
00117     21•          DIMENSION  B5(MCH), A5(MCH), S5(MCH), P5(MCH)
00120     22•          DIMENSION  B6(MCH), A6(MCH)
00121     23•          DIMENSION  B7(MCH), A7(MCH)
00122     24•          DIMENSION  B8(MCH), A8(MCH), PCTX(NVTOTL),    XPCT (MCH,MAXPL1)
00123     25•          DIMENSION  B9(MCH), A9(MCH)
00124     26•          DIMENSION  B10(MCH),A10(MCH)
00125     27•          DIMENSION  B11(MCH),A11(MCH),B12(MCH),A12(MCH),B13(MCH),A13(MCH)
00126     28•          DIMENSION  B14(MCH),A14(MCH),B15(MCH),A15(MCH),B16(MCH),A16(MCH)
00127     29•          DIMENSION  B17(MCH),A17(MCH),B18(MCH),A18(MCH),B21(MCH),A21(MCH)
00130     30•          DIMENSION  B22(MCH),A22(MCH),B23(MCH),A23(MCH),S23(MCH),P23(MCH)
00131     31•          DIMENSION  B24(MCH),A24(MCH),B25(MCH),A25(MCH)
00131     32•    C
00132     33•          DIMENSION  XMIN(MCH), XMAX(MCH), XRANGE(MCH), IXHIST(MCH,MAXPL1)
00132     34•    C
00133     35•          DIMENSION  YMIN(MCH), YMAX(MCH), YRANGE(MCH), IYHIST(MCH,MAXPL1,2)
00133     36•    C
00134     37•          DIMENSION  XMED(MCH), XMODE(MCH), XMNDEV(MCH)
00134     38•    C
00135     39•          DIMENSION CMNDEV(MCH),CXMIN(MCH),CXMAX(MCH),CMEAN(MCH),CMED(MCH)
00135     40•    C
00136     41•          DIMENSION CMODE(MCH),CRANGE(MCH),CSTDEV(MCH)
00136     42•    C
00137     43•          DIMENSION  CHVEC(MCH),BLOCK(6),IDATA(3950),IXH(NVTOTL),IYH(NVTX2)
00137     44•    C
00140     45•          DIMENSION  TRMIN(16) , TRMAX(16), TRUNC(4,MCH,2), HPFC(NPFCT)
00140     46•    C
00141     47•          DIMENSION  PAGHD1(93), PAGHD2(15), ICUT(6), NUMX(MCH), NUMY(MCH)
00141     48•    C
00141     49•    C
00142     50•          DIMENSION   GSCALE(6) , BSCALE(6)
```

ORIGINAL PAGE IS OF POOR QUALITY

```
00142     51•      C
00143     52•            DIMENSION    XMNEW(MCH), SDNEW(MCH), XHI(MCH), XLO(MCH)
00143     53•      C
00144     54•            DIMENSION    ICA(4) , ICB(4) , GAIN(32) , BIAS(32) , A(32), B(32)
00144     55•      C
00145     56•            DATA  PAGSKP/'(1H1)'/ ,  BADVAL/99999999.9/
00145     57•      C
00150     58•            DATA  PAGHD1 /'(1H1  T5,5HTAPE: ,1X,A6, T41,9HEDAYHRMNS , T55,
00150     59•      C
00150     60•           1 4HLAT= ,1X,I3, T63,1H: , I2, 1X, A1 / T5,5HFILE: ,1X,I3, T21,
00150     61•      C
00150     62•           2 8HSEGMENT: ,1X,I4, T37,4H10:  ,11, I3, I2, I2, I1, T54,5HLONG= ,
00150     63•      C
00150     64•           3 1X,I3, T63,1H: ,I2,1X,A1, T75,9HSUN ELEV: ,1X,I3, T91,7HSUN AZ: ,
00150     65•      C
00150     66•           4 1X,I3 )' /
00150     67•      C
00152     68•            DATA  PAGHD2 /'(1H1/T5,''FILE:'',1X, I3, T21,''MERGE TAPE:'', 2X,
00152     69•      C
00152     70•           1 A6,6X,''IMAGE NO.'',I4,10X,''SUN ELEV='',I4)' /
00152     71•      C
00154     72•            COMMON  /PGLABL/  PAGHD1, PAGHD2, NFPROC, TLABEL, PSUNEL
00154     73•      C
00154     74•      C
00155     75•            COMMON /ST5X6/ A2,B2, XMIN, XMAX, XRANGE, P2, S2, XMNDEV, XMED,
00155     76•      C
00155     77•           1   XMODE, CXMIN, CXMAX, CRANGE, CMEAN, CSTDEV, CMNDEV, CMED, CMODE
00155     78•      C
00156     79•            COMMON /ST1011/  A1, B1, P1, S1
00156     80•      C
00157     81•            COMMON /STCOMP/  TRUNC, A3, B3, P3, S3, A4, B4, P4, S4, A5, B5,
00157     82•           1              P5, S5, A6, B6, A7, B7, A8, B8, A9, B9, A10, B10
00157     83•           2             ,A11,B11,A12,B12,A13,B13,A14,B14,A15,B15,A16,B16,
00157     84•           3              A17,B17,A18,B18,A19,B19,A20,B20,A21,B21,A22,B22,
00157     85•           4              A23,B23,P23,S23,A24,B24,A25,B25,A26,B26,A27,B27,
00157     86•           5              A28,B28,A29,B29 , ICA , ICB
00157     87•      C
00160     88•            COMMON  /HDATA/ SUNEL, SUNAZ, BO(MCH), AAI(MCH), ISITE, IDERTS,
00160     89•           1              MISDAY, MISHR, MISMIN, MISSEC, NORSOU, IEW, LATDEG,
00160     90•           2              LATMIN, LONDEG, LONMIN
00160     91•      C
00161     92•            COMMON /FREQ/  IXHIST , XPCT
00161     93•      C
00162     94•            COMMON /PRCENT/   PCTGT(MCH,6) , MINTST(6)
00162     95•      C
00163     96•            COMMON /PFCH/   HISPFC(MCH,NPFC,2)
00163     97•      C
00164     98•            COMMON /ALL/ INTYPE, NIMAGE, NCHOUT, NC, CHVEC, AIBI, ELFLG
00164     99•      C
00165    100•            EQUIVALENCE  ( IXHIST(1,1), IXH(1) ) , ( IYHIST(1,1,1), IYH(1) )
00165    101•      C
00166    102•            EQUIVALENCE  ( NPFC(1), HISPFC(1,1,1) ) , ( PCTX(1), XPCT(1,1) )
00166    103•      C
00167    104•            DATA  TRMIN/   4, 3 , 5 , 2,10,10,10, 5,20,20,20, 7, 4, 4, 4, 2 /
00167    105•      C
00171    106•            DATA  TRMAX/ 120,120,120,61,80,80,80,40,60,60,60,30,80,80,80,40 /
00171    107•      C
00173    108•            DATA   PI/3.1415927/  ,  SIN60/.86603/ ,  BLANK/'      ' /
```

```
00173     109•      C
00177     110•            DATA  / ICUT/ 60,90,60,70,80,90 /
00177     111•      C
00177     112•      C
00177     113•      C
00177     114•      C                        A8        A14     A15     A16       A17     A18
00201     115•            DATA  GSCALE/ .00135, .00655, .0225, .00135, .00655, .0229 /
00201     116•      C
00201     117•      C                        B8        B14     B15     B16       B17     B18
00203     118•            DATA  BSCALE/ .00135, .00655, .0225, .49865, .49345, .4771 /
00203     119•      C
00203     120•      C
00205     121•            DATA  IC4/ 8, 5, 5, 10 /  ,  ICB / 16, 26, 32, 13 /
00205     122•      C
00205     123•      C
00210     124•            EQUIVALENCE  ( GAIN, A )  ,  ( BIAS, B )
00210     125•      C
00210     126•      C
00210     127•      C
00210     128•      C•••••••
```

```
00246    167•            IABFLG = 0
00247    168•            IF ( GAIN(1) .GT. 0.0 )  IABFLG = 99
00247    169•      C
00247    170•      C
00247    171•      C********  EXTRACT INPUT TAPE LABEL
00247    172•      C
00247    173•      C
00251    174•       18   CALL TAPLAB ( INUNIT , TLABEL )
00251    175•      C
00251    176•      C
00252    177•            IF ( GSFCTP .GT. 0 )  INTYPE = 1
00253    178•      C
00254    179•            IF(REGTP .GT. 0)  INTYPE = 2
00254    180•      C
00256    181•            IF( MERGTP .GT. 0)  INTYPE = 3
00256    182•      C
00260    183•            IF( INTYPE .EQ. 2)  GO TO 5
00260    184•      C
00260    185•      C
00260    186•      C
00262    187•         20 NFPROC = NFPROC + 1
00263    188•            IF( NFPROC .GT. LASTF)  GO TO 5
00265    189•            EOFSKP = NFPROC - 1
00265    190•      C
00265    191•      C
00266    192•            CALL TAPHDR ( INUNIT , EOFSKP , TAPFMT )
00266    193•      C
00266    194•      C
00266    195•      C
00266    196•      C********  IF SUN ANGLE IS INPUT, OVERRIDE ANY OTHER SUN ANGLE WITH
00266    197•      C          THE INPUT SUN ANGLE - IF NOT INPUT, AND NOT PROCESSING A
00266    198•      C          GODDARD TAPE, SET SUN ANGLE = 0.0 --- COMPUTE SUN ANGLE
00266    199•      C          CORRECTION FACTOR, IF SUN ANGLE AVAILABLE .
00266    200•      C
00266    201•      C*******
00266    202•      C
00267    203•            FSUNEL = 0.0
00270    204•            IF( INTYPE .EQ. 1)  FSUNEL = SUNEL
00272    205•            IF ( EL .GT. 0 )  FSUNEL = EL
00274    206•            PSUNEL = FSUNEL
00275    207•            ELFLG = FSUNEL .GT. 0.0
00276    208•            IF ( .NOT. ELFLG )  GO TO 2001
00300    209•            SUNRAD = FSUNEL * DGTORD
00301    210•            SINSUN = SIN(SUNRAD)
00302    211•            CFACT = SIN60/SINSUN
00303    212•            CINV = 1.0/CFACT
00304    213•       2001 CONTINUE
00304    214•      C
00304    215•      C
00305    216•            MAXPIX = MAXPL1 - 2
00306    217•            MINPIX = 0
00306    218•      C
00306    219•      C
00307    220•            NIMAGE = 0
00307    221•      C
00307    222•      C
00307    223•      C
00310    224•            IMIQT = NUMCH/4
```

```
00310     225.      C
00310     226.      C
00310     227.      C
00311     228.            IF ( IMTOT .GT. 0)  GO TO 21
00313     229.            WRITE( 6,PAGSKP )
00315     230.            WRITE(6,7000)  NUMCH
00315     231.      C
00320     232.       7000 FORMAT(///// 5X,'****** TOTAL NO. OF CHANNELS REQUESTED TO BE PROC
00320     233.      C
00320     234.           1ESSED IS', I5 // 12X,'NO. OF CHANNELS MUST BE AN INTEGRAL MULTIPLE
00320     235.      C
00320     236.           2 OF  4' // 12X,'THIS CASE NOT PROCESSED - PROCEEDING TO NEXT INPUT
00320     237.      C
00320     238.           3 CASE' )
00320     239.      C
00321     240.            WRITE( 6 , PAGSKP )
00323     241.            GO TO 5
00323     242.      C
00323     243.      C
00324     244.         21 IF( NIMAGE .GE. IMTOT )  GO TO 20
00324     245.      C
00326     246.            LSTART = 1
00327     247.            LEND = 117
00330     248.            LINC = 1
00331     249.            PIXEL1 = 1
00332     250.            PIXEND = 196
00333     251.            PIXINC = 1
00334     252.            BLOCK(1) = LSTART
00335     253.            BLOCK(2) = LEND
00336     254.            BLOCK(3) = LINC
00337     255.            BLOCK(4) = PIXEL1
00340     256.            BLOCK(5) = PIXEND
00341     257.            BLOCK(6) = PIXINC
00342     258.            NLINES = LEND - LSTART + 1
00343     259.            NPIXEL = PIXEND - PIXEL1 + 1
00344     260.            DO   22  I=1,NVTOTL
00347     261.            PCTX(I) = 3.0
00350     262.         22 IXH(I) = 0
00350     263.      C
00352     264.            DO   23  I=1,NVTX2
00355     265.         23 IYH(I) = 0
00355     266.      C
00357     267.            DO   24  I=1,NPFCT
00362     268.         24 HPFC(I) = 0.0
00362     269.      C
00362     270.      C
00364     271.            NC = 4
00364     272.      C
00364     273.      C
00365     274.            JJ = NIMAGE * 4
00366     275.            DO   26  I=1,NC
00371     276.         26 CHVEC(I) = JJ + I
00371     277.      C
00371     278.      C
00371     279.      C
00371     280.      C**************      COMPUTE  10 X 11  AREA  GAIN , BIAS
00371     281.      C**************       A1 , B1
00371     282.      C
```

```
00371    283*      C
00373    284*            AIBI = .FALSE.
00373    285*      C
00374    286*            IF( IABFLG .GT. 0)  GO TO 27
00374    287*      C
00376    288*            IF( INTYPE .EQ. 1 )  GO TO 29
00376    289*      C
00400    290*            GO TO 2902
00400    291*      C
00401    292*       27   AIBI = .TRUE.
00401    293*      C
00402    294*            J = NIMAGE * 4
00403    295*            DO  28  I=1,NC
00406    296*            JJ = J + I
00407    297*            A1(I) = GAIN(JJ)
00410    298*       28   BI(I) = BIAS(JJ)
00410    299*      C
00412    300*            GO TO 2902
00412    301*      C
00413    302*       29   AIBI = .TRUE.
00413    303*      C
00414    304*            DO  2901  I=1,NC
00417    305*            A1(I) = AA1(I)
00420    306*      2901  BI(I) = BO(I)/A1(I)
00420    307*      C
00422    308*      2902  CONTINUE
00422    309*      C
00423    310*            CALL FLDINT( BLOCK, CHVEC, NC )
00423    311*      C
00423    312*      C
00423    313*      C
00424    314*            LINCNT = 0
00424    315*      C
00424    316*      C
00424    317*      C
00424    318*      C
00424    319*      C************  READ INPUT TAPE AND OBTAIN 5 X 6 AREA FREQUENCY DIST.
00424    320*      C
00424    321*      C
00424    322*      C
00425    323*            DO  50  I=1,NLINES
00425    324*      C
00425    325*      C
00430    326*            CALL LINERD( IDATA, IPEOF )
00430    327*      C
00430    328*      C
00431    329*            IF ( IPEOF .LT. 0 )  GO TO 55
00433    330*            LINCNT  = LINCNT + 1
00433    331*      C
00434    332*            DO  40  J=1,NC
00437    333*            OCH = J
00440    334*            NBEG = ( J-1) * NPIXEL
00441    335*            DO  30  K=1,NPIXEL
00444    336*            NPT = NBEG + K
00445    337*            IPIX = IDATA(NPT)
00446    338*            IF ( IPIX .LT. MINPIX)  IPIX = MAXPLI - 1
00450    339*            IF ( IPIX .GT. MAXPIX )  IPIX = MAXPLI - 1
00452    340*            IPIX = IPIX + 1
```

```
00453     341.          30  IAHIST( OCH , IPIX ) = IAHIST( OCH , IPIX ) + 1
00455     342.          40  CONTINUE
00457     343.          50  CONTINUE
00457     344.      C
00461     345.          NCHOUT = NC
00461     346.      C
00462     347.       55 NIMAGE = NIMAGE + 1
00462     348.      C
00463     349.          WRITE(6,9000)  NFPROC, LINCNT, NIMAGE
00463     350.      C
00470     351.       9000 FORMAT(  / 5X, 'FROM PFCGAB:' / 5X, '------------' /  5X,
00470     352.      C
00470     353.         1 'FILE NO.' , I5 , 3X, ', NO. SCAN LINES READ =' , I7 , 3X,
00470     354.      C
00470     355.         2 ', FOR IMAGE NO.' , I5 )
00470     356.      C
00471     357.          IF ( IFEOF .LT. 0)  GO TO 20
00471     358.      C
00471     359.      C
00471     360.      C
00471     361.      C
00471     362.      C        COMPUTE STATISTICS,GAINS,BIASES FOR THE CURRENT FILE
00471     363.      C
00471     364.      C
00471     365.      C
00473     366.       100   CONTINUE
00473     367.      C
00473     368.      C
00473     369.      C************  FOR THE  10 x 11  NM SEARCH AREA:
00473     370.      C
00473     371.      C              ARITHMETIC MEAN = P1
00473     372.      C              STANDARD DEVIATION = S1
00473     373.      C
00473     374.      C
00473     375.      C              COMPUTE  A9,B9,  A10,B10,   A24,B24
00473     376.      C
00473     377.      C************
00473     378.      C
00473     379.      C
00474     380.          IF( .NOT. AIBI )  GO TO 111
00474     381.      C
00476     382.          DO  110  I=1,NC
00501     383.          P1(I) = -B1(I) +  (128.0/A1(I) )
00502     384.          S1(I) = 42.666667/A1(I)
00502     385.      C
00503     386.          A9(I) = 256.0/( 4.0 * S1(I) )
00503     387.      C
00504     388.          B9(I) = - ( P1(I) - 2.0 * S1(I) )
00504     389.      C
00505     390.          A10(I) = 256.0/( 5.0 * S1(I) )
00505     391.      C
00506     392.          B10(I) = - ( P1(I) - 2.5 * S1(I) )
00506     393.      C
00507     394.          A24(I) = ICA(I)
00507     395.      C
00510     396.       110  B24(I) = - ( P1(I) - ICB(I) ) * ICA(I)
00510     397.      C
00512     398.          GO TO 115
```

```
00512     399•      C
00513     400•       111   DO  112  I=1,NC
00516     401•             A1(I) = BLANK
00517     402•             B1(I) = BLANK
00520     403•             P1(I) = BLANK
00521     404•             S1(I) = BLANK
00522     405•             A9(I) = BLANK
00523     406•             B9(I) = BLANK
00524     407•             A10(I) = BLANK
00525     408•             B10(I) = BLANK
00526     409•             A24(I) = BADVAL
00527     410•       112   B24(I) = BADVAL
00531     411•             A26 = BADVAL
00532     412•             B26 = BADVAL
00533     413•             A27 = BADVAL
00534     414•             B27 = BADVAL
00534     415•      C
00534     416•      C
00534     417•      C
00534     418•      C•••••••••••••
00534     419•      C
00534     420•      C               FOR THE  5 X 6  NM SAMPLE SEGMENT AREA :
00534     421•      C
00534     422•      C               STATISTICS:
00534     423•      C
00534     424•      C               MEAN = P2
00534     425•      C               MEDIAN = XMED
00534     426•      C               MODE = XMODE
00534     427•      C               RANGE = XRANGE
00534     428•      C               MEAN DEVIATION = XMNDEV
00534     429•      C               STANDARD DEVIATION = S2
00534     430•      C
00534     431•      C               ALSO,  COMPUTE  A6,B6,  A7,B7,  A11,B11,  A12,B12,
00534     432•      C
00534     433•      C               A13,B13,   A25,B25
00534     434•      C
00534     435•      C•••••••••••••
00534     436•      C
00534     437•      C
00535     438•       115  CONTINUE
00535     439•      C
00536     440•            MAX = MAXPL1 - 1
00536     441•      C
00537     442•            NC = 4
00537     443•      C
00540     444•            DO  200  I= 1,NC
00543     445•            SUMX = 0.0
00544     446•            SUMXSQ = 0.0
00545     447•            MAXVAL = 0
00546     448•            MINVAL = 0
00547     449•            NUMVAL = 0
00550     450•            DO  130  J=1,MAX,1
00553     451•            JJ = J
00554     452•            K = IXHIST(I,JJ)
00555     453•            IF(K .EQ. 0)  GO TO 130
00557     454•            IX = JJ - 1
00560     455•            IF( MINVAL .GT. 0)  GO TO 129
00562     456•            MINVAL = JJ
```

```
00563   457•       120  SUMX = SUMX + ( IX • K)
00564   458•            IXSQ = IX • IX
00565   459•            SUMXSQ = SUMXSQ + ( K • IXSQ )
00566   460•            NUMVAL = NUMVAL + K
00567   461•       130  CONTINUE
00567   462•       C
00571   463•            NUMX(I) = NUMVAL
00571   464•       C
00571   465•       C
00572   466•            DO  140  J=MAX,1,-1
00575   467•            IF( MAXVAL .GT. 0)  GO TO 150
00577   468•            JJ = J
00600   469•            K = IXHIST(I,JJ)
00601   470•            IF( K .EQ. 0)  GO TO 140
00603   471•            MAXVAL = JJ
00603   472•       C
00604   473•        140 CONTINUE
00604   474•       C
00606   475•       150  CONTINUE
00606   476•       C
00607   477•            NHALF = NUMX(I)/2
00610   478•            FNUM = NUMX(I)
00611   479•            SUMSQ = SUMX • SUMX
00612   480•            XMEAN = SUMX/FNUM
00612   481•       C
00613   482•            P2(I) = XMEAN
00613   483•       C
00614   484•            XMIN(I) = MINVAL  - 1
00615   485•            XMAX(I) = MAXVAL - 1
00616   486•            XRANGE(I) = XMAX(I) - XMIN(I)
00617   487•            VAR = ( SUMXSQ - SUMSQ/FNUM)/ (FNUM - 1.0)
00617   488•       C
00620   489•            S2(I) = SQRT(VAR)
00621   490•            A2(I) = 256.0/( 6.0 • S2(I) )
00622   491•            B2(I) = - ( P2(I) - ( 3.0 • S2(I) ) )
00622   492•       C
00623   493•            A6(I) = 256.0/ ( 4.0 • S2(I) )
00624   494•            B6(I) = - ( P2(I) - ( 2.0 • S2(I) ) )
00624   495•       C
00624   496•       C
00625   497•            A25(I) = ICA(I)
00626   498•            B25(I) = - ( P2(I) - ICB(I) ) • ICA(I)
00626   499•       C
00626   500•       C
00627   501•            MODE = 0
00630   502•            MODTST = 0
00631   503•            MEDIAN = 0
00632   504•            MEDTST = 0
00633   505•            DO  170  J=MINVAL,MAXVAL,1
00636   506•            JJ = J
00637   507•            K = IXHIST(I,JJ)
00640   508•            FLK = K
00641   509•            XPCT(I,J) = FLK/FNUM • 100.0
00642   510•            IF( K .LE. MODTST)  GO TO 160
00644   511•            MODTST = K
00645   512•            MODE = JJ
00646   513•       160  IF ( MEDIAN .GT. 0 )   GO TO 170
00650   514•            MEDTST = MEDTST + K
```

```
00651     515•            IF( MEDTST .GE. NHALF)  MEDIAN = JJ
00653     516•      170   CONTINUE
00653     517•      C
00655     518•            XMODE(I) = MODE - 1
00656     519•            XMED(I) = MEDIAN - 1
00657     520•            MINVAL = XMIN(I) + 1.0
00660     521•            MAXVAL = XMAX(I) + 1.0
00661     522•            SUMX = 0.0
00662     523•            DO  180  J=MINVAL,MAXVAL,1
00665     524•            NX = IXHIST(I,J)
00666     525•            IF ( NX .EQ. 0)  GO TO 180
00670     526•            FNX = NX
00671     527•            X = J - 1
00672     528•            SUMX = SUMX + ( FNX * ABS( X-XMEAN) )
00673     529•      180   CONTINUE
00673     530•      C
00675     531•            XMNDEV(I) = SUMX/FNUM
00675     532•      C
00676     533•            A7(I) = 256.0/ ( 6.0 * XMNDEV(I) )
00677     534•            B7(I) = - ( P2(I) - ( 3.0 * XMNDEV(I) ) )
00677     535•      C
00700     536•            A11(I) = 256.0/( 5.0 * S2(I) )
00701     537•            B11(I) = - ( P2(I) - 2.5 * S2(I) )
00701     538•      C
00702     539•            A12(I) = 256.0/( 5.0 * XMNDEV(I) )
00703     540•            B12(I) = - ( P2(I) - 2.5 * XMNDEV(I) )
00703     541•      C
00704     542•            A13(I) = 256.0/( 4.0 * XMNDEV(I) )
00705     543•            B13(I) = - ( P2(I) - 2.0 * XMNDEV(I) )
00705     544•      C
00706     545•      200   CONTINUE
00706     546•      C
00706     547•      C
00706     548•      C
00706     549•      C******  COMPUTE  A19,B19,  A20,B20  ---  BANDS 1,2,4  AND 2,3,4
00706     550•      C
00706     551•      C
00710     552•            DO  600  I=1,4
00713     553•            XHI(I) = P2(I) + 3.0 * S2(I)
00714     554•      600   XLO(I) = P2(I) - 3.0 * S2(I)
00714     555•      C
00716     556•            XHI(4) = 2.0 * XHI(4)
00717     557•            XLO(4) = 2.0 * XLO(4)
00717     558•      C
00720     559•            DO  640  J=1,2
00723     560•            TEST1 = -1.0 * 10.**8
00724     561•            TEST2 = 1.0 * 10.**8
00724     562•      C
00725     563•            DO  610  I=1,4
00730     564•            IF( J .EQ. 1 .AND. I .EQ. 3)  GO TO 610
00732     565•            IF( J .EQ. 2 .AND. I .EQ. 1)  GO TO 610
00732     566•      C
00734     567•            TEST1 = AMAX1( TEST1, XHI(I) )
00734     568•      C
00735     569•            TEST2 = AMIN1( TEST2 , XLO(I) )
00735     570•      C
00736     571•      610   CONTINUE
00736     572•      C
```

```
00740     573.          GO TO ( 620 , 630 ) ,  J
00740     574.    C
00741     575.     620  A19 = 256.0/(TEST1 -TEST2)
00742     576.          B19 = -TEST2
00742     577.    C
00743     578.          GO TO 640
00743     579.    C
00744     580.     630  A20 = 256.0/(TEST1-TEST2)
00745     581.          B20 = -TEST2
00745     582.    C
00746     583.     640  CONTINUE
00746     584.    C
00746     585.    C
00746     586.    C********   COMPUTE  A21,B21,  A22,B22 --- ITERATE ON 3 STD DEV. TRUNC.
00746     587.    C
00746     588.    C
00750     589.          DO  720  J=1,2
00750     590.    C
00753     591.          DO  710  I=1,NC
00753     592.    C
00756     593.          GO TO ( 650, 660 ) ,  J
00756     594.    C
00757     595.     650  MINVAL = P2(I) - 3.0 * S2(I) + 1.5
00760     596.          MAXVAL = P2(I) + 3.0 * S2(I) + 1.5
00760     597.    C
00761     598.          GO TO 670
00761     599.    C
00762     600.     660  MINVAL = XMNEW(I) - 3.0 * SDNEW(I) + 1.5
00763     601.          MAXVAL = XMNEW(I) + 3.0 * SDNEW(I) + 1.5
00763     602.    C
00764     603.     670  SUMX = 0.0
00765     604.          SUMXSQ = 0.0
00766     605.          FNTOT = 0.0
00766     606.    C
00767     607.          DO  680  K=MINVAL,MAXVAL,1
00767     608.    C
00772     609.          X = K + 1
00773     610.          FNX = IXHIST(I,K)
00774     611.          SUMX = SUMX + FNX * X
00775     612.          FNTOT = FNTOT + FNX
00776     613.     680  SUMXSQ = SUMXSQ + FNX * ( X * X )
00776     614.    C
01000     615.          FNM1 = FNTOT - 1.0
01001     616.          VAR = ( SUMXSQ - ( SUMX*SUMX/FNTOT))/FNM1
01002     617.          SDNEW(I) = SQRT(VAR)
01003     618.          XMNEW(I) = SUMX/FNTOT
01003     619.    C
01004     620.          GO TO ( 690 , 700 ) ,  J
01004     621.    C
01005     622.     690  A21(I) = 256.0/(6.0 * SDNEW(I) )
01006     623.          B21(I) = - ( XMNEW(I) - 3.0 * SDNEW(I) )
01006     624.    C
01007     625.          GO TO 710
01007     626.    C
01010     627.     700  A22(I) = 256.0/( 6.0 * SDNEW(I) )
01011     628.          B22(I) = - ( XMNEW(I) - 3.0 * SDNEW(I) )
01011     629.    C
01012     630.     710  CONTINUE
```

ORIGINAL PAGE IS OF POOR QUALITY

```
01012     631•      C
01014     632•       720  CONTINUE
01014     633•      C
01014     634•      C
01014     635•      C*******   COMPUTE  A26,B26,  A27,B27, A28,B28,  A29, B29
01014     636•      C
01014     637•      C           BANDS  1,2,4  AND  2,3,4  FOR 10 X 11 MEAN,STD DEV AND
01014     638•      C
01014     639•      C          5 X 6 MEAN , STD DEV
01014     640•      C
01014     641•      C*******
01014     642•      C
01014     643•      C
01016     644•            KK = 1
01016     645•      C
01017     646•            IF ( .NOT. A1B1)  KK = 2
01017     647•      C
01021     648•       730  CONTINUE
01021     649•      C
01022     650•            DO  900  J=1,2
01025     651•            XLO(1) = 0.0
01025     652•      C
01026     653•            DO  760  I=1,4
01026     654•      C
01031     655•            IF ( J .EQ. 1 .AND. I .EQ. 3)  GO TO 760
01031     656•      C
01033     657•            IF ( J .EQ. 2 .AND. I .EQ. 1)  GO TO 760
01033     658•      C
01035     659•            GO TO ( 740 , 750) , KK
01035     660•      C
01036     661•       740  XLO(I) = XLO(I) + P1(I)
01037     662•            GO TO 760
01037     663•      C
01040     664•       750  XLO(I) = XLO(I) + P2(I)
01040     665•      C
01041     666•       760  CONTINUE
01041     667•      C
01043     668•            GO TO ( 770 , 780 ) , KK
01043     669•      C
01044     670•       770  XLO(I) = ( XLO(I) + P1(4) )/3.0
01044     671•      C
01045     672•            GO TO 790
01045     673•      C
01046     674•       780  XLO(I) = ( XLO(I) + P2(4) )/3.0
01046     675•      C
01047     676•       790  XHI(I) = -1.0 * 10.**6
01047     677•      C
01050     678•            DO  830  I=1,4
01050     679•      C
01053     680•            IF ( J .EQ. 1 .AND. I .EQ. 3)  GO TO 830
01053     681•      C
01055     682•            IF ( J .EQ. 2 .AND. I .EQ. 1)  GO TO 830
01055     683•      C
01057     684•            GO TO ( 800 , 810) , KK
01057     685•      C
01060     686•       800  STDDEV = S1(I)
01061     687•            XMEAN = P1(I)
01061     688•      C
```

```
01062    689•            GO TO 820
01062    690•      C
01063    691•       810  STDDEV = S2(I)
01064    692•            XMEAN = PZ(I)
01064    693•      C
01064    694•      C
01065    695•       820 GO TO ( 822 , 822 , 822 , 821 ) ,  I
01065    696•      C
01065    697•      C
01066    698•       821 STDDEV = 2.0 * STDDEV
01067    699•            XMEAN = 2.0 * XMEAN
01067    700•      C
01067    701•      C
01070    702•       822 TEST1 = 3.0 * STDDEV + XMEAN - XLO(1)
01070    703•      C
01071    704•            TEST2 = 3.0 * STDDEV - XMEAN + XLO(1)
01071    705•      C
01072    706•            TEST1 = AMAX1( TEST1 , TEST2 )
01072    707•      C
01073    708•            XHI(1) = AMAX1( TEST1 , XHI(1) )
01073    709•      C
01074    710•       830  CONTINUE
01074    711•      C
01076    712•            XHI(2) = XLO(1) + XHI(1)
01076    713•      C
01077    714•            XLO(2) = XLO(1) - XHI(1)
01077    715•      C
01100    716•            GO TO ( 840 , 870 ) ,  KK
01100    717•      C
01101    718•       840  GO TO ( 850 , 860 ) ,  J
01101    719•      C
01102    720•       850  A26 = 256.0 / ( XHI(2) - XLO(2) )
01103    721•            B26 = - XLO(2) * A26
01103    722•      C
01104    723•            GO TO 900
01104    724•      C
01105    725•       860  A27 = 256.0/ ( XHI(2) - XLO(2) )
01106    726•            B27 = -XLO(2) * A27
01106    727•      C
01107    728•            GO TO 900
01107    729•      C
01110    730•       870  GO TO ( 880 , 890 ) ,  J
01110    731•      C
01111    732•       880  A28 = 256.0/( XHI(2) - XLO(2) )
01112    733•            B28 = -XLO(2) * A28
01112    734•      C
01113    735•            GO TO 900
01113    736•      C
01114    737•       890  A29 = 256.0/( XHI(2) - XLO(2) )
01115    738•            B29 = -XLO(2) * A29
01115    739•      C
01116    740•       900  CONTINUE
01116    741•      C
01120    742•            IF ( KK .EQ. 2)  GO TO 910
01120    743•      C
01122    744•            KK = 2
01123    745•            GO TO 730
01123    746•      C
```

```
01124     747•       910  CONTINUE
01124     748•      C
01124     749•      C•••••••••••••••••••••••••••••••••••••••••••••
01124     750•      C
01124     751•      C              TRUNCATED DISTRIBUTIONS --- STATISTICS, GAINS, BIASES
01124     752•      C
01124     753•      C              COMPUTE  A3,B3,P3,S3,   A4,B4,P4,S4,   A5,B5,P5,S5,
01124     754•      C
01124     755•      C              A23,B23,P23,S23
01124     756•      C
01124     757•      C•••••••••••••••••••••••••••••••••••••••••••••
01124     758•      C
01125     759•            NC = 4
01125     760•      C
01126     761•            DO  253  I=1,4
01131     762•            II = ( I-1) * NC
01132     763•            DO  240  J=1,NC
01135     764•            OCH = J
01136     765•            JJ = II + J
01137     766•            TRUNC( I, OCH, 1) = TRMIN(JJ)
01140     767•            TRUNC( I, OCH, 2) = TRMAX(JJ)
01141     768•            SUMX = 0.0
01142     769•            SUMXSQ = 0.0
01143     770•            NX = 0
01144     771•            MINVAL = TRUNC(I, OCH, 1) + 1
01145     772•            MAXVAL = TRUNC(I, OCH, 2) + 1
01145     773•      C
01146     774•            IF ( I .LT. 4)  GO TO 201
01146     775•      C
01150     776•            IF ( .NOT.  ELFLG )  GO TO 236
01152     777•            MINVAL = TRUNC(I,OCH,1) * CINV + 1.5
01153     778•            MAXVAL = TRUNC(I,OCH,2) * CINV + 1.5
01154     779•            TRUNC(I,OCH,1) = MINVAL - 1
01155     780•            TRUNC(I,OCH,2) = MAXVAL - 1
01155     781•      C
01156     782•       201  DO  205  K=MINVAL,MAXVAL,1
01161     783•            L = K
01162     784•            L = IXHIST( OCH, K )
01163     785•            IF( L .EQ. 0)  GO TO 205
01165     786•            IX = K - 1
01166     787•            SUMX = SUMX + ( L * IX)
01167     788•            SUMXSQ = SUMXSQ + L * ( IX*IX)
01170     789•            NX = NX + L
01171     790•       205  CONTINUE
01173     791•            FNUM = NX
01174     792•            XMEAN = SUMX/FNUM
01175     793•            SUMSQ = SUMX * SUMX
01176     794•            VAR = ( SUMXSQ - SUMSQ/FNUM)/(FNUM-1.0)
01177     795•            STDDEV = SQRT(VAR)
01177     796•      C
01200     797•            GO TO ( 210, 220, 230, 235) ,  I
01200     798•      C
01201     799•       210  P3(OCH) = XMEAN
01202     800•            S3(OCH) = STDDEV
01203     801•            A3(OCH) = 256.0/( 6.3 * S3(OCH) )
01204     802•            B3(OCH) = - ( P3(OCH) - (3.0 * S3(OCH) ) )
01204     803•      C
01205     804•            GO TO 240
```

```
01205     805*      C
01206     806*       220  P4(OCH) = XMEAN
01207     807*            S4(OCH) = STDDEV
01210     808*            A4(OCH) = 256.0/( 6.0 * S4(OCH) )
01211     809*            B4(OCH) = - ( P4(OCH) - ( 3.0 * S4(OCH) ) )
01211     810*      C
01212     811*            GO TO 240
01212     812*      C
01213     813*       230  P5(OCH) = XMEAN
01214     814*            S5(OCH) = STDDEV
01215     815*            A5(OCH) = 256.0/( 6.0 * S5(OCH) )
01216     816*            B5(OCH) = - ( P5(OCH) - ( 3.0 * S5(OCH) ) )
01216     817*      C
01217     818*            GO TO  240
01217     819*      C
01220     820*       235  P23(OCH) = XMEAN
01221     821*            S23(OCH) = STDDEV
01221     822*      C
01222     823*            A23(OCH) = 256.0/( 6.0 * STDDEV)
01223     824*            B23(OCH) = - ( XMEAN - 3.0 * STDDEV)
01223     825*      C
01224     826*            GO TO 240
01224     827*      C
01225     828*       236  P23(OCH) = BADVAL
01226     829*            S23(OCH) = BADVAL
01227     830*            A23(OCH) = BADVAL
01230     831*            B23(OCH) = BADVAL
01231     832*       240  CONTINUE
01231     833*      C
01231     834*      C
01233     835*       250  CONTINUE
01233     836*      C
01233     837*      C
01233     838*      C
01233     839*      C
01233     840*      C************    3-SIGMA BIAS,BB, AND SCALING FACTOR, AB
01233     841*      C
01233     842*      C
01233     843*      C********          COMPUTE   AB,B5,   A14,B14, ... , A18,B18
01233     844*      C
01233     845*      C
01235     846*            NC = 4
01235     847*      C
01236     848*            DO  305  K=1,4
01241     849*            GSC = GSCALE(K)
01242     850*            BSC = BSCALE(K)
01242     851*      C
01243     852*            DO  300  I=1,NC
01246     853*            II = I
01247     854*            NRCUT = GSC * NUMAX(I) + 0.5
01250     855*            NUMUT = NRCUT
01251     856*            NUMLT = NRCUT
01252     857*            MINVAL = XMIN(I) + 1.1
01253     858*            MAXVAL = XMAX(I) + 1.1
01254     859*            NUT = 0
01255     860*            NLT = 0
01256     861*            XLT = XMIN(I)
01257     862*            XUT = XMAX(I)
```

```
01260     863.            DO  260  J=MINVAL,MAXVAL,1
01263     864.            IF ( NLT .GE. NUMLT )  GO TO 265
01265     865.            JJ = IXHIST(II, J )
01266     866.            NLT = NLT + JJ
01267     867.      260   XLT = J - 1
01267     868.      C
01271     869.      265   CONTINUE
01271     870.      C
01272     871.            DO  270  J=MAXVAL,MINVAL,-1
01275     872.            IF ( NUT .GE. NUMUT )  GO TO 280
01277     873.            JJ = IXHIST(II , J )
01300     874.            NUT = NUT + JJ
01301     875.      270   XUT = J - 1
01301     876.      C
01301     877.      C
01303     878.      280   CONTINUE
01303     879.      C
01304     880.      285   RNEW = XUT - XLT
01304     881.      C
01305     882.            IF ( RNEW .GT. 0.0)  GO TO 290
01305     883.      C
01305     884.      C
01307     885.            GAIN(I) = 0.0
01307     886.      C
01310     887.            GO TO 291
01311     888.      290   GAIN(I) = 256.0/RNEW
01311     889.      C
01312     890.      291   IF( K .LE. 3)  GO TO 293
01312     891.      C
01314     892.            MAXVAL = P2(II) + 1.5
01315     893.            MINVAL = XMIN(II) + 1.5
01316     894.            NBCUT = BSC * NUMX(II) + 0.5
01317     895.            NLT = 0
01320     896.            XLT = XMIN(II)
01320     897.      C
01321     898.            DO  292  L=MAXVAL,MINVAL,-1
01321     899.      C
01324     900.            IF( NLT .GE. NBCUT)  GO TO 293
01326     901.            NLT = NLT + IXHIST(II,L)
01327     902.            XLT = L - 1
01327     903.      C
01330     904.      292   CONTINUE
01330     905.      C
01332     906.      293   BIAS(I) = -XLT
01332     907.      C
01333     908.            GO TO ( 294,295, 296, 297, 298, 299 ) , K
01333     909.      C
01334     910.      294   A8(II) = GAIN(I)
01335     911.            B8(II) = BIAS(I)
01336     912.            GO TO 300
01336     913.      C
01337     914.      295   A14(II) = GAIN(I)
01340     915.            B14(II) = BIAS(I)
01341     916.            GO TO 300
01341     917.      C
01342     918.      296   A15(II) = GAIN(I)
01343     919.            B15(II) = BIAS(I)
01344     920.            GO TO 300
```

```
01344     921.      C
01345     922.       297  A16(II) = GAIN(I)
01346     923.            B16(II) = BIAS(I)
01347     924.            GO TO 300
01347     925.      C
01350     926.       298  A17(II) = GAIN(I)
01351     927.            B17(II) = BIAS(I)
01352     928.            GO TO 300
01352     929.      C
01353     930.       299  A18(II) = GAIN(I)
01354     931.            B18(II) = BIAS(I)
01354     932.      C
01355     933.       300  CONTINUE
01355     934.      C
01357     935.       305  CONTINUE
01357     936.      C
01357     937.      C
01357     938.      C
01357     939.      C************  FOR THE  5 X 6 NM  SAMPLE SEGMENT AREA :
01357     940.      C
01357     941.      C                 %  >  60  BRIGHTNESS
01357     942.      C
01357     943.      C                 %  >  90
01357     944.      C
01357     945.      C                 %  > ( SIN  SUN ELEV)**2 * ( 60 * SIN 60 )
01357     946.      C
01357     947.      C
01357     948.      C                 %  >          " "          * (70 * SIN 60)
01357     949.      C                 %  >          " "          * (80 * SIN 60)
01357     950.      C                 %  >          " "          * (90 * SIN 60)
01357     951.      C
01357     952.      C
01357     953.      C**************
01357     954.      C
01357     955.      C
01357     956.      C
01361     957.            NTEST = 6
01362     958.            IF( .NOT. ELFLG)  NTEST = 2
01362     959.      C
01362     960.      C
01364     961.            DO  330  J=1,NTEST
01364     962.      C
01367     963.            GO TO ( 310, 310, 320, 320, 320, 320 ),  J
01367     964.      C
01370     965.       310  MINTST(J) = ICUT(J)
01370     966.      C
01371     967.            GO TO 330
01371     968.      C
01372     969.       320  FMIN = ICUT(J)
01373     970.            MINTST(J) = ( FMIN * CFACT) + 0.5
01373     971.      C
01374     972.       330  CONTINUE
01374     973.      C
01376     974.            NC = 4
01377     975.            DO  370  I=1,NC
01402     976.            II = I
01403     977.            FTOTAL = NUMX(I)
01404     978.            MAXVAL = XMAX(I) + 1.0
```

99

```
01405     979•            DO  360  J=1,NTEST
01410     980•            JJ = J
01411     981•            MINVAL = MINTST(J) + 1
01412     982•            NX = 0
01413     983•            DO  340  K=MINVAL,MAXVAL,1
01416     984•            L = IXHIST(I,K)
01417     985•       340  NX = NX + L
01421     986•            FNX = NX
01422     987•            PCTGT(I,J) = FNX/FTOTAL * 100.0
01422     988•      C
01423     989•       360  CONTINUE
01423     990•      C
01425     991•       370  CONTINUE
01425     992•      C
01427     993•            IF( .NOT. ELFLG )  GO TO 385
01427     994•      C
01427     995•      C
01427     996•      C**************
01427     997•      C
01427     998•      C               STATISTICS CORRECTED TO 60 DEGREE SUN ELEVATION :
01427     999•      C
01427    1000•      C               CORRECTED MEAN DEVIATION = CMNDEV
01427    1001•      C                         MINIMUM PIXEL = CXMIN
01427    1002•      C                         MAXIMUM PIXEL = CXMAX
01427    1003•      C                         RANGE = CRANGE
01427    1004•      C                         STANDARD DEVIATION = CSTDEV
01427    1005•      C                         ARITHMETIC MEAN = CMEAN
01427    1006•      C                         MEDIAN  =  CMED
01427    1007•      C
01427    1008•      C                         MODE =  CMODE
01427    1009•      C
01427    1010•      C**************
01427    1011•      C
01427    1012•      C
01431    1013•            DO  380  I=1,NC
01434    1014•            CXMIN(I) = CFACT * XMIN(I)
01435    1015•            CXMAX(I) = CFACT * XMAX(I)
01436    1016•            CRANGE(I) = CFACT * XRANGE(I)
01437    1017•            CMEAN(I) = CFACT * P2(I)
01440    1018•            CSTDEV(I) = CFACT * SZ(I)
01441    1019•            CMNDEV(I) = CFACT * XMNDEV(I)
01442    1020•            CMODE(I) = CFACT * XMODE(I)
01443    1021•       380  CMED(I) = CFACT * XMED(I)
01443    1022•      C
01443    1023•      C
01443    1024•      C*************  FOR  5 X 6  NM  SAMPLE SEGMENT AREA :
01443    1025•      C
01443    1026•      C
01443    1027•      C               FREQUENCY DISTRIBUTION OF DATA PROCESSED FOR PFC
01443    1028•      C*************
01443    1029•      C
01443    1030•      C
01445    1031•       385  IF ( .NOT.  A181 )  GO TO 475
01445    1032•      C
01447    1033•            FMAX = MAXPL1 - 1
01450    1034•            DO  470  I = 1,NC
01453    1035•            II = I
01454    1036•            MINVAL = XMIN(I) + 1.0
```

```
01455   1037•            MAXVAL = XMAX(I) + 1.0
01456   1038•             DO  400  J=MINVAL,MAXVAL,1
01461   1039•            JJ = J
01462   1040•            NVAL = IXHIST(I,J)
01463   1041•            IF ( NVAL .EQ. 0 )  GO TO 400
01465   1042•            X = JJ - 1
01466   1043•            Y = AI(I) * ( X + BI(I) ) + .5
01467   1044•            IF ( Y .LT. 0.0 )  Y = 0.0
01471   1045•            Y = Y + 1.0
01472   1046•            IF ( Y .GT. FMAX )  Y = FMAX
01474   1047•            IY = Y
01475   1048•            IYHIST(I,IY,1) = IYHIST(I,IY,1) +  NVAL
01475   1049•      C
01476   1050•       400  CONTINUE
01476   1051•      C
01476   1052•      C
01500   1053•            MAX = MAXPL1 - 1
01501   1054•            DO  410  J1=1,MAX,1
01504   1055•            JJ1 = J1
01505   1056•            NY = IYHIST(I,J1,1 )
01506   1057•            IF ( NY .GT. 0 )  GO TO 420
01506   1058•      C
01510   1059•       410  CONTINUE
01510   1060•      C
01512   1061•       420  YMIN(I) = JJ1 - 1
01512   1062•      C
01512   1063•      C
01513   1064•            DO  430  K=MAX,1,-1
01516   1065•            KK = K
01517   1066•            NY = IYHIST(I,K,1)
01520   1067•            IF ( NY .GT. 0)  GO TO 440
01520   1068•      C
01522   1069•       430  CONTINUE
01522   1070•      C
01522   1071•      C
01524   1072•       440  YMAX(I) = KK - 1
01525   1073•            YRANGE(I) = YMAX(I) - YMIN(I)
01526   1074•            FPFC = 1.01
01527   1075•            FNPFC = NPFC
01530   1076•            FNY = YRANGE(I) + 1.0
01531   1077•            FINC = FNPFC/FNY
01532   1078•            MINVAL = YMIN(I) + 1.0
01533   1079•            MAXVAL = YMAX(I) + 1.0
01534   1080•            PFCTOT = 0.0
01535   1081•            DO  450  J2=MINVAL,MAXVAL,1
01540   1082•            LVLPFC = FPFC
01541   1083•            IF( LVLPFC .GT. NPFC)  LVLPFC = NPFC
01543   1084•            IYHIST(I,J2,2) = LVLPFC
01544   1085•            FPFC = FPFC + FINC
01545   1086•            FNY = IYHIST(I,J2,1)
01546   1087•            PFCTOT = PFCTOT + FNY
01547   1088•            HISPFC(I,LVLPFC,1) = HISPFC(I,LVLPFC,1) + FNY
01547   1089•      C
01550   1090•       450  CONTINUE
01550   1091•      C
01550   1092•      C
01552   1093•            NUMY(I) = PFCTOT
01552   1094•      C
```

89

```
01552   1095•      C
01553   1096•            DO  460  J3=1,NPFC,1
01556   1097•            FNUM = HISPFC(I,J3,1)
01557   1098•            PCT = FNUM/PFCTOT * 100.0
01557   1099•      C
01560   1100•       460  HISPFC(I,J3,2) = PCT
01560   1101•      C
01560   1102•      C
01562   1103•       470  CONTINUE
01562   1104•      C
01562   1105•      C
01564   1106•       475  CONTINUE
01564   1107•      C
01564   1108•      C
01564   1109•      C
01564   1110•      C**************
01564   1111•      C**************        OUTPUT
01564   1112•      C**************
01564   1113•      C
01564   1114•      C
01565   1115•            NPRINT = 0
01566   1116•       480  NPRINT = NPRINT + 1
01567   1117•            IF ( INTYPE .EQ. 3 .AND. NPRINT .GT. 5)  GO TO 21
01571   1118•            IF ( NPRINT .GT. 5)  GO TO 20
01571   1119•      C
01573   1120•            IF ( INTYPE .NE. 3)
01573   1121•      C
01573   1122•           • WRITE(6,PAGHD1)  TLABEL, LATDEG, LATMIN, NORSOU, NFPROC, IGITE,
01573   1123•      C
01573   1124•           1  IDERTS, MISDAY, MISHR, MISMIN, MISSEC, LONDEG, LONMIN, IEW,
01573   1125•      C
01573   1126•           2  PSUNEL , SUNAZ
01573   1127•      C
01573   1128•      C
01616   1129•            IF( NPRINT .EQ. 4 .AND. ( .NOT. A1B1) )  GO TO 480
01616   1130•      C
01620   1131•            IF ( INTYPE .EQ. 3 ) WRITE(6,PAGHD2) NFPROC,TLABEL,MIMAGE,PSUNEL
01620   1132•      C
01627   1133•            GO TO ( 490 , 500 , 510 , 520 , 530 ) ,  NPRINT
01627   1134•      C
01627   1135•      C
01627   1136•      C**************    PRINT  FREQUENCY DISTRIBUTION ,  5 X 6 NM AREA
01627   1137•      C
01627   1138•      C
01627   1139•      C
01630   1140•       490  CALL PRXMIS
01630   1141•      C
01631   1142•            GO TO 460
01631   1143•      C
01631   1144•      C
01631   1145•      C
01631   1146•      C**************    PRINT  STATISTICS FOR 5 X 6 AREA AND 10 x 11 AREA
01631   1147•      C
01631   1148•      C
01631   1149•      C
01632   1150•       500  CALL PRSTAT
01632   1151•      C
01633   1152•            GO TO 480
```

```
01633   1153*      C
01633   1154*      C
01633   1155*      C
01633   1156*      C**************     PRINT  TABULATION OF PERCENT (5 X 6 AREA)  PIXELS
01633   1157*      C
01633   1158*      C                   EXCEEDING SELECTED PIXEL VALUES
01633   1159*      C**************
01633   1160*      C
01633   1161*      C
01633   1162*      C
01634   1163*       510  CALL PRPCT
01634   1164*      C
01635   1165*            GO TO 480
01635   1166*      C
01635   1167*      C
01635   1168*      C
01635   1169*      C**************  PRINT  FREQUENCY DISTRIBUTION, PFC LEVELS
01635   1170*      C
01635   1171*      C
01636   1172*       520  CALL  PFCHIS
01636   1173*      C
01637   1174*            GO TO 480
01637   1175*      C
01637   1176*      C
01637   1177*      C
01637   1178*      C**************     PRINT  TABULATION OF COMPUTED  GAINS  ,  BIASES ,
01637   1179*      C
01637   1180*      C                   AND STATISTICS:  A1,B1,P1,S1,   A2,B2,P2,S2, ... ,
01637   1181*      C
01637   1182*      C                   A6,B6, A7,B7, ... , A29,B29
01637   1183*      C**************
01637   1184*      C
01637   1185*      C
01637   1186*      C
01640   1187*       530  CALL  PRGAB
01641   1188*            GO TO 460
01641   1189*      C
01641   1190*      C
01642   1191*       1000 STOP
01643   1192*            END

    END OF COMPILATION:        NO  DIAGNOSTICS.
PFCGAB          SYMBOLIC                                  21 OCT 76  17:11:02   0  01434670    14  1192  (DELETED)
PFCGAB  CODE    RELOCATABLE                               21 OCT 76  17:11:02   1  01477350    72     1  (DELETED)
                                                                                0  01477460    14   237
```

70

```
@ FOR,*   HISTX,HISTX
UNIVAC 1108 FORTRAN V EXEC 11 LEVEL 25A  -(EXEC8 LEVEL E12010U10A)                    26 OCT 76          18:50:25. 81
THIS COMPILATION WAS DONE ON 26 OCT 76 AT 18:50:25

   SUBROUTINE PRXHIS     ENTRY POINT 000362

   STORAGE USED: CODE(1) 000376; DATA(0) 000103; BLANK COMMON(2) 000000

    COMMON BLOCKS:

    0003    ALL     000010
    0004    FREQHD  000064
    0005    FREQ    004310
    0006    ST5X6   000020

   EXTERNAL REFERENCES (BLOCK, NAME)

    0007    NNCUD$
    0010    NIO2$
    0011    NWDU$
    0012    NIO1$
    0013    NERR3$

   STORAGE ASSIGNMENT  (BLOCK, TYPE, RELATIVE LOCATION, NAME)

    0000     000031 1000F      0001     000010 131G       0001     000114 160G       0000     000033 2000F      0001     000201 206G
    0001     000205 212G       0001     000213 216G       0001     000220 223G       0001     000226 231G       0001     000235 237G
    0001     000247 244G       0001     000256 253G       0001     000331 277G       0001     000315 30L        0006     000000 A2
    0000  R  000001 BAND       0000  R  000002 BLANK      0006     000004 B2         0000  R  000000 DASH       0004  R  000000 HDFREG
    0000  I  000010 I          0000     000054 INJP$      0003     000000 INTYPE     0000  I  000023 IX         0005  I  000000 IXH
    0000  I  000012 IXN        0000  I  000030 IXOUT     0000  I  000011 IXI        0000  I  000021 J          0000  I  000022 JJ
    0000  I  000020 K          0000  I  000024 L1        0000  I  000025 L2         0000  I  000016 NBEG       0003     000003 NC
    0000  I  000005 NCHAN      0003  I  000002 NCHOUT    0003  I  000004 NCVEC      0003     000001 NIMAGE     0000  I  000015 NLAST
    0000  I  000017 NPR        0000  I  000026 NVAL      0000  I  000014 NWRITE    0000  I  000013 NX         0000  I  000003 NXFMT
    0004  R  000054 OUTREC     0000  R  000027 PCT       0000  R  000004 PCTFMT    0006  R  000014 XMAX       0006  R  000010 XMIN
    0000  R  000007 XN         0000  R  002004 XPCT      0000  R  000006 X1

00100       1*      C
00101       2*            COMPILER ( DATA=SHORT )
00101       3*      C
00103       4*            SUBROUTINE  PRXHIS
00103       5*      C
00105       6*            PARAMETER   MCH=4
00105       7*      C
00106       8*            PARAMETER  MAXPL1 = 257
00106       9*      C
00107      10*            DIMENSION   NCVEC(MCH)
00107      11*      C
00110      12*            COMMON /ALL/ INTYPE, NIMAGE, NCHOUT, NC, NCVEC
00110      13*      C
00111      14*            DATA  DASH/'------'/ , BAND/'BAND '/ , BLANK/'      '/
```

```
00111     15•      C
00115     16•           DATA  NAFMT/'( I6 )'/ , PCTFMT/'(F6.1)'/
00115     17•      C
00120     18•           COMMON /FREQHD/  HDFREQ(44) , OUTREC(8)
00120     19•      C
00121     20•           DATA   HDFREQ/'(///// T47, 11HS X 6  AREA      /  T46,2A6,A1// T42,
00121     21•      C
00121     22•          1 22HFREQUENCY DISTRIBUTION  / T41, 4A6,A1 /// 20X,         (A5,I2,
00121     23•      C
00121     24•          2 14X) /   14X,          (2A6,A4,5X) /2X, 5HPIXEL /2X,5HVALUE,9X,
00121     25•      C
00121     26•          3     (4HFREQ ,6X, 1H3 , 10X) /2X,6H-------,7X,          (A6,3X,A5,
00121     27•      C
00121     28•          4 7X)  )     ' /
00121     29•      C
00121     30•      C
00123     31•           COMMON /FREQ/  IXH(MCH ,MAXPLI),  XPCT(MCH,MAXPLI)
00123     32•      C
00124     33•           COMMON /ST5X6/ A2(MCH), B2(MCH), XMIN(MCH), XMAX(MCH)
00124     34•      C
00124     35•      C
00124     36•      C
00125     37•           NCHAN = NCHOUT
00126     38•           XI = 1.0E36
00127     39•           XN = 0.0
00127     40•      C
00130     41•           DO  10  I=1,NCHAN,1
00130     42•      C
00133     43•           IF ( XMIN(I) .LT. XI )  XI = XMIN(I)
00133     44•      C
00135     45•           IF ( XMAX(I) .GT. XN )   XN = XMAX(I)
00135     46•      C
00137     47•        10 CONTINUE
00141     48•           IXI = XI
00142     49•           IXN = XN
00143     50•           NX = IXN - IXI + 1
00144     51•           NWRITE = NCHAN /4 + 1
00145     52•           IF ( NCHAN .EQ. 4 )   NWRITE = 1
00147     53•           HDFREQ(3) = 6H'S X 6
00150     54•           HDFREQ(4) =             6H  AREA
00151     55•           HDFREQ(5) =                6H'
00152     56•           HDFREQ(27) = 6HSHPIXE
00153     57•           HDFREQ(28) = 6HL /2X,
00154     58•           HDFREQ(29) = 6HSHVALU
00155     59•           HDFREQ(30) = 6HE ,9X,
00156     60•           NLAST = 0
00156     61•      C
00157     62•           DO  50  I=1,NWRITE,1
00162     63•           NBEG = NLAST + 1
00163     64•           NLAST = NBEG + 3
00164     65•           IF ( I .EQ. NWRITE )   NLAST = NCHAN
00166     66•           NPR = IABS( NLAST - NBEG + 1 )
00166     67•      C
00166     68•      C
00167     69•           ENCODE(6,1000, HDFREQ(18) )   NPR
00172     70•           ENCODE(6,1000, HDFREQ(23) )   NPR
00175     71•           ENCODE(6,1000, HDFREQ(31) )   NPR
00200     72•           ENCODE(6,1000, HDFREQ(39) )   NPR
```

```
00200      C
00203      1000 FORMAT( 3X , I1 , 2X )
00203      C
00203      C
00203      C
00204            WRITE(6,HDFREQ)  ( DASH, K=1,3) , ( DASH, K=1,5 ) ,
00204      C
00204           1   ( BAND, NCVEC(K), K=NBEG,NLAST,1 )  ,
00204      C
00204           2   ( DASH,DASH,DASH, K=NBEG,NLAST,1 )  ,
00204      C
00204           3   ( DASH,DASH, K=NBEG,NLAST,1)
00204      C
00204      C
00236            DO  40  J=1,NX,1
00241            JJ = J
00242            IX = IX1 + JJ
00242      C
00243            DO  20  K=1,8
00246        20  OUTREC(K) = BLANK
00246      C
00250            L1 = 0
00251            [illegible]
00251      C
00252            DO  30  K=NBEG,NLAST,1
00255            L1 = L2 + 1
00256            L2 = L1 + 1
00257            NVAL = IAH(K,IX)
00260            IF ( NVAL .EQ. 0)  GO TO  30
00262            PCT = XPCT(K,IX)
00262      C
00263            ENCODE(6, NXFMT, OUTREC(L1) )  NVAL
00266            ENCODE(6, PCTFMT, OUTREC(L2) )  PCT
00266      C
00271        30  CONTINUE
00271      C
00273            IXOUT = IX - 1
00273      C
00274            WRITE(6,2000)  IXOUT , OUTREC
00274      C
00303      2000 FORMAT(1H   1X, I4, 8X,  4( A6, 3X, A6, 6X )  )
00303      C
00304        40  CONTINUE
00304      C
00306        50  CONTINUE
00306      C
00310            RETURN
00310      C
00311            END

   END OF COMPILATION:          NO  DIAGNOSTICS.
HISTX            SYMBOLIC                                  21 OCT 76  17:11:03   0  01506046    14   121  (DELETED)
HISTX    CODE    RELOCATABLE                               21 OCT 76  17:11:03   1  01511304    36     1  (DELETED)
                                                                                   0  01511350    14    34
```

73

```
@ FOR,*   PSTAT,PSTAT                                                                    26 OCT 76          18:50:26.683
UNIVAC 1108 FORTRAN V EXEC II LEVEL 25A  -(EXEC8 LEVEL E12010010A)
THIS COMPILATION WAS DONE ON 26 OCT 76 AT 18:50:26

   SUBROUTINE PRSTAT    ENTRY POINT 000702

   STORAGE USED: CODE(1) 000715; DATA(0) 000307; BLANK COMMON(2) 000000

    COMMON BLOCKS:

    0003    ST5X6   000110
    0004    ST1011  000020
    0005    ALL     000010

   EXTERNAL REFFRENCES (BLOCK, NAME)

    0006    NWDU$
    0007    NIO2$
    0010    NIO1$
    0011    NERR3$

   STORAGE ASSIGNMENT  (BLOCK, TYPE, RELATIVE LOCATION, NAME)

    0001    000310 10L       0000    000164 1000F     0001    000366 15L       0001    000414 20L       0000    000170 2000F
    0001    000035 202G      0001    000072 215G      0001    000104 225G      0001    000116 235G      0001    000130 245G
    0001    000142 255G      0001    000154 265G      0001    000163 274G      0000    000173 3000F     0001    000211 304G
    0001    000251 316G      0001    000257 322G      0001    000276 333G      0001    000304 337G      0001    000314 347G
    0001    000522 35L       0001    000352 361G      0001    000360 365G      0001    000402 376G      0001    000545 40L
    0000    000173 4000F     0001    000410 402G      0001    000420 412G      0001    000446 422G      0001    000506 434G
    0001    000514 440G      0001    000533 450G      0001    000541 454G      0001    000567 470G      0001    000601 500G
    0000    000203 5000F     0001    000610 507G      0001    000642 517G      0001    000650 523G      0001    000265 6L
    0001    000656 60L       0000    000207 6000F     0000    000213 7000F     0000    000220 7001F     0000    000225 8000F
    0000    000240 8001F     0000    000244 8002F     0000    000247 8003F     0000    000233 8004F     0004    000000 A1
    0003    000000 A2        0000 R  000136 BAND      0004    000004 B1        0003    000004 B2        0003    000064 CMEAN
    0003    000100 CMED      0003    000074 CMNDEV    0003    000104 CMODE     0003    000060 CRANGE    0003    000070 CSTDEV
    0003    000054 CXMAX     0003    000050 CXMIN     0000 R  000137 DASH      0000 R  000142 HAREA     0000 R  000145 HCOR
    0000 R  000144 HDAT      0000 R  000143 HEL       0000 R  000141 HSUN      0000 R  000032 H1011     0000 R  000140 H5X6
    0000 I  000146 I         0000    000257 INJPS     0005 I  000000 INTYPE    0000 I  000126 ISTAT1    0000 I  000132 ISTAT2
    0000 I  000155 J         0000 I  000162 JJJ       0000 I  000160 J1        0000 I  000161 J2        0000 I  000154 K
    0000 I  000163 L         0000 I  000046 LINLAB    0000 I  000152 NBEG      0005    000003 NC        0000 I  000147 NCHAN
    0005 I  000002 NCHOUT    0005 I  000004 NCVEC     0000 I  000153 NDIF      0005    000001 NIMAGE    0000 I  000156 NLABN
    0000 I  000157 NLAB1     0000 I  000151 NLAST     0000 I  000150 NWRITE    0004    000010 P1        0003    000024 P2
    0003 R  000010 STAT1     0003 R  000050 STAT2     0004 R  000000 STAT3     0000 R  000000 STHDG     0004    000014 S1
    0003    000030 S2        0003    000014 XMAX      0003    000040 XMED      0003    000010 XMIN      0003    000034 XMNDEV
    0003    000044 XMODE     0003    000020 XRANGE


00100      1*      C
00101      2*              COMPILER ( DATA=SHORT )
00101      3*      C
00101      4*      C
00103      5*              SUBROUTINE   PRSTAT
```


74

```
00103       6*      C
00105       7*            PARAMETER   MCH=4
00105       8*      C
00106       9*            PARAMETER   NPR1=8*MCH , NPR2=4*MCH
00106      10*      C
00107      11*            DIMENSION  A1(MCH), B1(MCH), P1(MCH), S1(MCH), NCVEC(MCH)
00107      12*      C
00110      13*            DIMENSION  A2(MCH), B2(MCH), P2(MCH), S2(MCH)
00110      14*      C
00111      15*            DIMENSION XMIN(MCH),XMAX(MCH),XRANGE(MCH)
00112      16*            DIMENSION XMNDEV(MCH),XMED(MCH),XMODE(MCH),CXMIN(MCH),CSTDEV(MCH)
00113      17*            DIMENSION CXMAX(MCH),CMEAN(MCH),CMNDEV(MCH),CMED(MCH),CMODE(MCH)
00114      18*            DIMENSION  CRANGE(MCH)
00114      19*      C
00114      20*      C
00115      21*            COMMON /ST5X6/ A2, B2, XMIN, XMAX, XRANGE, P2, S2, XMNDEV,
00115      22*           1   XMED, XMODE, CXMIN, CXMAX, CRANGE, CMEAN, CSTDEV, CMNDEV,
00115      23*           2   CMED, CMODE
00115      24*      C
00116      25*            COMMON /ST1011/  A1,B1, P1, S1
00116      26*      C
00117      27*            COMMON /ALL/ INTYPE, NIMAGE, NCHOUT, NC, NCVEC
00117      28*      C
00120      29*            DIMENSION  STHDG(20) , H1011(12) , LINLAB(48)
00120      30*      C
00121      31*            DIMENSION  STAT1(NPR1), STAT2(NPR1), ISTAT1(MCH), ISTAT2(MCH)
00121      32*      C
00122      33*            DIMENSION  STAT3(NPR2)
00122      34*      C
00123      35*            EQUIVALENCE  ( STAT3(1) , A1(1) ), ( STAT2(1), CXMIN(1) )
00123      36*      C
00124      37*            EQUIVALENCE  ( STAT1(1) , XMIN(1) )
00124      38*      C
00125      39*            DATA  STHDG/'(///  T58,''STATISTICS''/ T26,''----------
00125      40*      C
00125      41*           1----------''// T58,
00125      42*      C
00125      43*           2 ''5 X 6 AREA'' / T57,''-----------'' /)' /
00125      44*      C
00127      45*            DATA  H1011/'(///// T53,''10 X 11  SEARCH AREA'' / T53,''----------
00127      46*      C
00127      47*           3----------'' // )' /
00127      48*      C
00131      49*            DATA  BAND/'BAND '/ ,  DASH/'------' /
00131      50*      C
00134      51*            DATA H5X6/'5 X 6 '/, HSUN/'SUN   '/, HAREA/'AREA  '/, HEL/'ELEV'/
00134      52*      C
00141      53*            DATA  HDAT/'DATA  '/, HCOR/'CORR  '/
00141      54*      C
00144      55*            DATA   (LINLAB(I),I=1,4)/'MIN                    ' /
00144      56*      C
00146      57*            DATA   (LINLAB(I),I=5,8)/'MAX                    ' /
00146      58*      C
00150      59*            DATA   (LINLAB(I),I=9,12) /'RANGE                  ' /
00150      60*      C
00152      61*            DATA   (LINLAB(I),I=13,16)/'MEAN              P2=  ' /
00152      62*      C
00154      63*            DATA   (LINLAB(I),I=17,20)/'STD DEVIATION     S2=  ' /
```

```
00154     64.     C
00156     65.           DATA   (LINLAB(I),I=21,24)/'MEAN DEVIATION          ' /
00156     66.     C
00160     67.           DATA   (LINLAB(I),I=25,28)/'MEDIAN                  ' /
00160     68.     C
00162     69.           DATA   (LINLAB(I),I=29,32)/'MODE                    ' /
00162     70.     C
00164     71.           DATA   (LINLAB(I),I=33,36)/'GAIN                A1= '/
00164     72.     C
00166     73.           DATA   (LINLAB(I),I=37,40)/'SECOND BIAS         B1= ' /
00166     74.     C
00170     75.           DATA   (LINLAB(I),I=41,44)/'ARITHMETIC MEAN     P1= ' /
00170     76.     C
00172     77.           DATA   (LINLAB(I),I=45,48)/'STANDARD DEVIATION  S1= ' /
00172     78.     C
00172     79.     C
00172     80.     C
00172     81.     C
00174     82.           NCHAN = NCHOUT
00174     83.     C
00175     84.           NWRITE = NCHAN/4 + 1
00176     85.           IF ( NCHAN .GE. 4 .AND. MOD(NCHAN,4) .EQ. 0 )  NWRITE = NCHAN/4
00200     86.           NLAST = 0
00201     87.           DO  60  I=1,NWRITE,1
00204     88.           NBEG = NLAST + 1
00205     89.           NLAST = NBEG + 3
00206     90.           IF ( I .EQ. NWRITE)  NLAST = NCHAN
00210     91.           NDIF = NLAST - NBEG
00211     92.           WRITE(6,STHDG)
00213     93.           WRITE(6,1000)  ( BAND, NCVEC(K), K=NBEG,NLAST,1)
00213     94.     C
00222     95.      1000 FORMAT(/ 30X, 4(A5, I2, 13X) )
00222     96.     C
00223     97.           WRITE(6,2000)  ( DASH,DASH, K=NBEG,NLAST,1)
00223     98.     C
00232     99.      2000 FORMAT( 26X  4(2A6,8X ) )
00232    100.     C
00233    101.           WRITE(6,3000)  ( HSX6,HSUN, K=NBEG,NLAST, 1 )
00233    102.     C
00242    103.      3000 FORMAT( 25X  4(A5, 5X, A3, 7X )  )
00242    104.     C
00243    105.           WRITE(6,4000)  ( HAREA, HEL, K=NBEG, NLAST, 1  )
00243    106.     C
00252    107.      4000 FORMAT( 26X  4( A4, 4X, A4, 8X )  )
00252    108.     C
00253    109.           WRITE(6,5000)   ( HDAT, HCOR, K=NBEG,NLAST,1  )
00253    110.     C
00262    111.      5000 FORMAT( 24X  4( A4, 4X, A4, 8X )  )
00262    112.     C
00263    113.           WRITE(6,6000)   ( DASH, DASH, K=NBEG,NLAST,1 )
00263    114.     C
00272    115.      6000 FORMAT( 25X  4( A6, 3X, A6, 5X )   )
00272    116.     C
00272    117.     C
00272    118.     C          STAT1 =  5X4 AREA STATISTICS: AMIN,AMAX,XRANGE,P2,S2,XMODEV,
00272    119.     C                                        XMED,XMODE, FOR ALL OUTPUT
00272    120.     C                                        CHANNELS
00272    121.     C
```

```
00272     122•      C
00272     123•      C          STAT2 = CORRECTED STATISTICS FOR 5X6 AREA :
00272     124•      C
00272     125•      C                   CXMIN,CXMAX,CRANGE,CMEAN,CSTDEV,CMNDEV,CMED,CMODE,
00272     126•      C
00272     127•      C                   FOR ALL OUTPUT CHANNELS
00272     128•      C
00272     129•      C
00272     130•      C          STAT3 = 10  X  11 AREA GAIN, BIAS, MEAN, STD DEV (A1,B1,P1,S1)
00272     131•      C                  FOR ALL OUTPUT CHANNELS
00272     132•      C
00272     133•      C
00272     134•      C
00273     135•            DO  10  J=1,3
00276     136•            NLABN = IABS(J*4)
00277     137•            NLABI = IABS(NLABN-3)
00300     138•            J1 = ( J-1 ) * MCH + NBEG
00301     139•            J2 = J1 + NDIF
00302     140•            JJJ = J1
00303     141•            DO  5  L=NBEG,NLAST,1
00306     142•            ISTAT1(L) = STAT1(JJJ)
00307     143•            ISTAT2(L) = STAT2(JJJ)
00310     144•        5   JJJ = JJJ + 1
00310     145•      C
00312     146•            IF ( INTYPE .EQ. 3)  GO TO 6
00312     147•      C
00314     148•            WRITE(6,7000)  ( LINLAB(K),K=NLABI,NLABN) ,
00314     149•      C
00314     150•           1               ( ISTAT1(K), ISTAT2(K), K=NBEG,NLAST,1 )
00314     151•      C
00327     152•
00327     153•       7000 FORMAT(/ 3X  3A6, A2, 3X, 4( I4, 4X, I4, 8X )  )
00327     154•      C
00330     155•            GO TO 10
00330     156•      C
00331     157•        6   WRITE(6,7001)  ( LINLAB(K), K=NLABI,NLABN) ,
00331     158•      C
00331     159•           1               ( ISTAT1(K),K=NBEG,NLAST,1)
00331     160•      C
00343     161•       7001 FORMAT( / 3X, 3A6, A2, 3X, 4(I4,16X)  )
00343     162•      C
00344     163•        10  CONTINUE
00344     164•      C
00344     165•      C
00346     166•            DO  20  J=4,6
00351     167•            NLABN = IABS(J*4)
00352     168•            NLABI = IABS(  NLABN - 3 )
00353     169•            J1 = ( J - 1 ) * MCH + NBEG
00354     170•            J2 = J1 + NDIF
00354     171•      C
00355     172•            IF( INTYPE .EQ. 3)  GO TO 15
00355     173•      C
00357     174•            WRITE(6,8000)  ( LINLAB(K), K=NLABI,NLABN) ,
00357     175•      C
00357     176•           1                ( STAT1(K), STAT2(K), K= J1,J2 )
00357     177•      C
00372     178•       8000 FORMAT(/ 3X, 3A6, A2, 3X,  4( F6.1, 2X, F6.1, 6X )  )
00372     179•      C
```

```
00373     180•            GO TO 20
00373     181•      C
00374     182•       15   WRITE(6,8004)    ( LINLAB(K), K=NLAB1,NLABN )  ,
00374     183•      C
00374     184•          1                  (  STAT1(K) , K=J1,J2 )
00374     185•      C
00406     186•       8004 FORMAT( / 3X, 3A6,A2, 3X, 4(F6.1,14X) )
00407     187•         20   CONTINUE
00407     188•      C
00407     189•      C
00411     190•            DO  40  J=7,8
00414     191•            NLABN = IABS(J*4)
00415     192•            NLAB1 = IABS( NLABN - 3 )
00416     193•            J1 = ( J - 1 ) * MCH + NBEG
00417     194•            J2 = J1 + NDIF
00420     195•            JJJ = J1
00421     196•            DO  30  L=NBEG,NLAST,1
00424     197•            ISTAT1(L) = STAT1(JJJ)
00425     198•            ISTAT2(L) = STAT2(JJJ)
00425     199•      C
00426     200•         30   JJJ = JJJ + 1
00426     201•      C
00430     202•            IF ( INTYPE .EQ. 3)  GO TO 35
00430     203•      C
00432     204•            WRITE(6,7000)  ( LINLAB(K), K=NLAB1,NLABN ) ,
00432     205•      C
00432     206•          1                ( ISTAT1(K), ISTAT2(K), K=NBEG,NLAST,1 )
00432     207•      C
00445     208•            GO TO 40
00445     209•      C
00446     210•         35   WRITE(6,7001)  ( LINLAB(K), K=NLAB1,NLABN ) ,
00446     211•      C
00446     212•          1                  ( ISTAT1(K) , K=NBEG,NLAST,1 )
00446     213•      C
00446     214•      C
00460     215•         40   CONTINUE
00460     216•      C
00462     217•            IF ( INTYPE .EQ. 3)  GO TO 60
00464     218•            WRITE(6,81011 )
00464     219•      C
00466     220•            WRITE(6,8001)    ( BAND, MCVEC(K), K=NBEG,NLAST )
00466     221•      C
00475     222•       8001 FORMAT(/ 30X,  4( A5, I2, 13X )  )
00475     223•      C
00476     224•            WRITE(6,8002)    (  DASH, DASH, K=NBEG,NLAST )
00476     225•      C
00505     226•       8002 FORMAT(  30X  4( A6, A1, 13X )  )
00505     227•      C
00505     228•      C
00506     229•            DO  50  J=1,4
00511     230•            NLABN = ( J+8 ) * 4
00512     231•            NLAB1 = NLABN - 3
00513     232•            J1 = ( J - 1 )  * MCH + NBEG
00514     233•            J2 = J1 + NDIF
00515     234•            WRITE(6,8003)    (  LINLAB(K), K=NLAB1,NLABN ) ,
00515     235•      C
00515     236•          1                  (  STAT3(K), K=J1,J2 )
00515     237•      C
```


ORIGINAL, PAGE IS
OF POOR QUALITY

```
00527      8003 FORMAT(// 3X   3A6,A5, 4X,  4( F6.1, 14X )  )
00527     C
00527     C
00530       50  CONTINUE
00530     C
00530     C
00532       60  CONTINUE
00532     C
00532     C
00534           RETURN
00535           END

     END OF COMPILATION:        NO  DIAGNOSTICS.
PSTAT          SYMBOLIC                                  21 OCT 76  17:11:06   0  01512304    14   248  (DELETED)
PSTAT    CODE  RELOCATABLE                               21 OCT 76  17:11:06   1  01521124    36     1  (DELETED)
                                                                               0  01521170    14    64
```

79

```
@ FOR,*   PPCT,PPCT                                                    26 OCT 76          18:50:28.972
UNIVAC 1108 FORTRAN V EXEC II LEVEL 25A  -(EXECR LEVEL E12010010A)
THIS COMPILATION WAS DONE ON 26 OCT 76 AT 18:50:29

   SUBROUTINE PRPCT     ENTRY POINT 000271

   STORAGE USED: CODE(1) 000303; DATA(0) 000165; BLANK COMMON(2) 000000

    COMMON BLOCKS:

    0003   ALL     000010
    0004   PRCENT  000036

   EXTERNAL REFERENCES (BLOCK, NAME)

    0005   NNCOD$
    0006   N*DU$
    0007   NIO2$
    0010   NIO1$
    0011   NERR2$
    0012   NERR3$

   STORAGE ASSIGNMENT  (BLOCK, TYPE, RELATIVE LOCATION, NAME)

    0001    000150 10L        0000    000120 1000F      0001    000034 141G       0001    000074 153G       0001    000106 163G
    0001    000110 165G       0001    000133 177G       0001    000157 20L        0000    000124 2000F      0001    000222 231G
    0001    000226 235G       0000    000127 2500F      0001    000166 30L        0000    000131 3000F      0001    000171 40L
    0001    000174 50L        0001    000177 60L        0001    000201 70L        0001    000214 75L        0001    000250 90L
    0000 R  000105 BAND       0000 R  000062 DASH       0000 R  000064 FTNOTE     0000 R  000001 HDGPCT     0000 I  000112 I
    0000 I  000106 IBLANK     0000    000143 INJP$      0003 I  000000 INTYPE     0000 I  000116 J          0000 I  000114 K
    0000 I  000117 L          0000 I  000057 LINLAB     0000 I  000000 MIN        0004 I  000030 MINTST     0000 I  000113 NREG
    0003    000003 NC         0000 I  000107 NCHAN      0003 I  000002 NCHOUT     0003 I  000004 NCVEC      0000 I  000035 NGT60
    0000 I  000043 NGT60C     0000 I  000046 NGT70C     0000 I  000051 NGT80C     0000 I  000040 NGT90      0000 I  000054 NGT90C
    0003    000001 NIMAGE     0000 I  000111 NLAST      0000 I  000115 NPR        0000 I  000110 NWRITE     0004 R  000000 PCTGT

00101      1*            COMPILER ( DATA=SHORT )
00101      2*      C
00101      3*      C
00103      4*            SUBROUTINE  PRPCT
00103      5*      C
00105      6*            PARAMETER   MCH=4
00105      7*      C
00106      8*            DIMENSION   HDGPCT(28), NGT60(3), NGT90(3), NGT60C(3), NGT70C(3)
00106      9*      C
00107     10*            DIMENSION   NGT80C(3), NGT90C(3), LINLAB(3), DASH(2),  FTNOTE(17)
00107     11*      C
00110     12*            DIMENSION   NCVEC(MCH)
00110     13*      C
00111     14*            COMMON /ALL/ INTYPE, NIMAGE, NCHOUT, NC, NCVEC
00111     15*      C
00111     16*      C
```

ORIGINAL PAGE IS OF POOR QUALITY

```
00112     17•            DATA   DASH/'------------'/,  BAND/'BAND '/,  IBLANK/'      '/
00112     18•      C
00116     19•            DATA  NGT60/'% > 60 ' /, NGT90/'% > 90 ' /, NGT60C/'% > 60•' /
00116     20•      C
00122     21•            DATA  NGT70C/'% > 70•' /, NGT80C/'% > 80••'/, NGT90C/'% > 90••'/
00122     22•      C
00126     23•            DATA  HDGPCT/'(///// T47,11H5 X 6  AREA  / T46,  ''----------''
00126     24•      C
00126     25•           1   //  T35 , ''PERCENT EXCEEDING SELECTED VALUES'' /  T35 ,
00126     26•      C
00126     27•           2       ''----------------------------------''/)' /
00126     28•      C
00126     29•      C
00130     30•            DATA  FTNOTE/'(/////  T17,''• = CORRECTED BRIGHTNESS'' /  T19,
00130     31•      C
00130     32•           1  ''= BRIGHTNESS  X  SIN 60/SIN SUN ELEV''  /  )' /
00130     33•      C
00130     34•      C
00132     35•            COMMON /PRCENT/  PCTGT(MCH,6) , MINTST(6)
00132     36•      C
00132     37•      C
00133     38•            NCHAN = NCHOUT
00133     39•      C
00134     40•            NWRITE = NCHAN/4 + 1
00135     41•            IF ( NCHAN .GE. 4 .AND. MOD(NCHAN,4) .EQ. 0)  NWRITE = NCHAN/4
00137     42•            NLAST = 0
00140     43•            DO  90  I=1,NWRITE,1
00143     44•            NBEG = NLAST + 1
00144     45•            NLAST = NBEG + 3
00145     46•            IF ( I .EQ. NWRITE)  NLAST = NCHAN
00145     47•      C
00147     48•            WRITE(6, HDGPCT )
00147     49•      C
00151     50•            WRITE(6,1000)    (  BAND, NCVEC(K), K=NBEG,NLAST )
00151     51•      C
00160     52•       1000 FORMAT(///  30X, 4(A5, I2, 13X )  )
00160     53•      C
00161     54•            WRITE(6,2000)    (  DASH, K=NBEG,NLAST )
00161     55•      C
00172     56•       2000 FORMAT( 30X  4( A6, A1, 13X)  )
00172     57•      C
00172     58•      C
00173     59•            NPR = 6
00173     60•      C
00174     61•            IF( INTYPE .EQ. 3)  NPR = 2
00174     62•      C
00176     63•            DO  80  J=1,NPR
00176     64•      C
00201     65•            GO TO (  10, 20, 30, 40, 50, 60 ) , J
00201     66•      C
00202     67•         10  LINLAB(1) = NGT60(1)
00203     68•             LINLAB(2) = NGT60(2)
00204     69•             LINLAB(3) = IBLANK
00205     70•             GO TO 75
00205     71•      C
00206     72•         20  LINLAB(1) = NGT90(1)
00207     73•             LINLAB(2) = NGT90(2)
00210     74•             LINLAB(3) = IBLANK
```

18

```
00211          GO TO 75
00211    C
00212       30 LINLAB(1) = NGT60C(1)
00213          GO  TO  70
00213    C
00214       40 LINLAB(1) = NGT70C(1)
00215          GO  TO  70
00215    C
00216       50 LINLAB(1) = NGT80C(1)
00217          GO  TO  70
00217    C
00220       60 LINLAB(1) = NGT90C(1)
00220    C
00220    C
00221       70 MIN = MINTST(J)
00221    C
00222          ENCODE(6, 2500, LINLAB(2) )    MIN
00222    C
00225     2500 FORMAT(  3H* (   ,   I3   )
00225    C
00226          LINLAB(3) = 6H)
00226    C
00227       75 WRITE(6, 3000 )    LINLAB, ( PCTGT(L,J), L=NREG,NLAST )
00227    C
00241     3000 FORMAT( //  T11, 3A6, 2X, F6.1, 3( 14X, F6.1)   )
00241    C
00242       80 CONTINUE
00242    C
00244          IF ( INTYPE .EQ. 3)  GO TO 90
00244    C
00246          WRITE(6,FTNOTE )
00246    C
00250       90 CONTINUE
00250    C
00250    C
00252          RETURN
00253          END

   END OF COMPILATION:        NO  DIAGNOSTICS.
PPCT            SYMBOLIC                                  21 OCT 76  17:11:07   0  01522770    14   111  (DELETED)
PPCT     CODE   RELOCATABLE                               21 OCT 76  17:11:07   1  01526012    36     1  (DELETED)
                                                                                 0  01526056    14    30
```

82

```
@ FOR,*   HISPFC,HISPFC                                                                    26 OCT 76          18:50:30.404
UNIVAC 1108 FORTRAN V EXEC II LEVEL 25A  -(EXEC8 LEVEL E12010010A)
THIS COMPILATION WAS DONE ON 26 OCT 76 AT 18:50:30

   SUBROUTINE PFCHIS    ENTRY POINT 000333

   STORAGE USED: CODE(1) 000350; DATA(0) 000076; BLANK COMMON(2) 000000

    COMMON BLOCKS:

    0003    ALL     000010
    0004    PFCH    000200
    0005    FREQHD  000064

   EXTERNAL REFERENCES (BLOCK, NAME)

    0006    NNCOD$
    0007    NIO2$
    0010    NWDU$
    0011    NIO1$
    0012    NERR3$

   STORAGE ASSIGNMENT  (BLOCK, TYPE, RELATIVE LOCATION, NAME)

    0000    000024 1000F     0001    000057 141G      0001    000144 167G      0001    000150 173G      0001    000156 177G
    0001    000270 20L       0000    000026 2000F     0001    000163 204G      0001    000171 212G      0001    000200 220G
    0001    000207 224G      0001    000216 233G      0001    000301 257G      0000 R  000001 BAND      0000 R  000002 BLANK
    0000 R  000000 DASH      0005 R  000000 HDFREQ    0004 R  000000 HPFC      0000 I  000011 I         0000    000046 INJP$
    0003    000000 INTYPE    0000 I  000015 J         0000 I  000014 K         0000 I  000010 LAST      0000 I  000017 L1
    0000 I  000020 L2        0000 I  000012 NBEG      0003    000003 NC        0000 I  000021 NCH       0000 I  000005 NCHAN
    0003 I  000002 NCHOUT    0003 I  000004 NCVEC     0003    000001 NIMAGE    0000 I  000016 NL        0000 I  000006 NLVL
    0000 I  000013 NPR       0000 I  000022 NV        0000 I  000003 NVFMT     0000 I  000007 NWRITE    0005 R  000054 OUTREC
    0000 R  000023 PCT       0000 R  000004 PCTFMT

00101        1.          COMPILER ( DATA=SHORT )
00101        2.     C
00101        3.     C
00103        4.          SUBROUTINE  PFCHIS
00103        5.     C
00103        6.     C
00105        7.          PARAMETER   MCH=4
00105        8.     C
00106        9.          PARAMETER  NPFC = 16
00106       10.     C
00107       11.          PARAMETER  MAXPL1 = 257
00107       12.     C
00110       13.          DIMENSION   NCVEC(MCH)
00110       14.     C
00111       15.          COMMON /ALL/ INTYPE, NIMAGE, NCHOUT, NC, NCVEC
00111       16.     C
00112       17.          DATA  DASH/'------'/ , BAND/'BAND '/ , BLANK/'      '/
```


83

```
00112    18•      C
00116    19•            DATA  NVFMT/'( I6 )'/ , PCTFMT/'(F6.1)'/
00116    20•      C
00121    21•            COMMON /PFCH/   HPFC(MCH,NPFC,2)
00121    22•      C
00122    23•            COMMON /FREQHD/ HDFREQ(44) , OUTREC(8)
00122    24•      C
00122    25•      C
00122    26•      C
00123    27•            NCHAN = NCHOUT
00124    28•            NLVL = NPFC
00125    29•            NWRITE = NCHAN/4 + 1
00125    30•      C
00126    31•            IF ( NCHAN .GE. 4 .AND. MOD(NCHAN,4) .EQ. 0)  NWRITE = NCHAN/4
00126    32•      C
00130    33•            HDFREQ(3) = 6H'     P
00131    34•            HDFREQ(4) =         6HFC
00132    35•            HDFREQ(5) =                 6H      '
00133    36•            HDFREQ(27) = 6HSH PFC
00134    37•            HDFREQ(23) = 6H  /2X,
00135    38•            HDFREQ(2) = 6HSHLEVE
00136    39•            HDFREQ(39) = 6HL ,9X,
00136    40•      C
00136    41•      C
00137    42•            LAST = 0
00137    43•      C
00140    44•            DO  40  I=1,NWRITE,1
00143    45•            NBEG = LAST + 1
00144    46•            LAST = NBEG + 3
00145    47•            IF ( I .EQ. NWRITE )   LAST = NCHAN
00147    48•            NPR = IABS(  LAST - NBEG + 1 )
00147    49•      C
00147    50•      C
00150    51•            ENCODE (6,1000, HDFREQ(18) )   NPR
00153    52•            ENCODE (6,1000, HDFREQ(23) )   NPR
00156    53•            ENCODE(6,1000, HDFREQ(31) )   NPR
00161    54•            ENCODE (6,1000, HDFREQ(39) )   NPR
00161    55•      C
00164    56•       1000 FORMAT( 3X , I1 , 2X )
00164    57•      C
00164    58•      C
00165    59•            WRITE(6,HDFREQ)   ( DASH, K=1,3) , ( DASH, K=1,5)  ,
00165    60•      C
00165    61•           1   ( BAND, NCVEC(K), K=NBEG,LAST,1 )  ,
00165    62•      C
00165    63•           2   ( DASH, DASH, DASH, K=NBEG,LAST,1 )  ,
00165    64•      C
00165    65•           3   ( DASH,DASH, K=NBEG, LAST,1 )
00165    66•      C
00165    67•      C
00217    68•            DO  30  J=1,NLVL,1
00222    69•            NL = J
00222    70•      C
00223    71•            DO  10  K=1,8
00226    72•       10   OUTREC(K) = BLANK
00226    73•      C
00230    74•            L1 = 0
00231    75•            L2 = 0
```

7-8

```
00231      C
00232            DO  20  K=NBEG,LAST,1
00235            NCH = K
00236            L1 = L2 + 1
00237            L2 = L1 + 1
00240            NV = HPFC(NCH,NL,1)
00241            IF( NV .EQ. 0)  GO TO 20
00243            PCT = HPFC(NCH,NL,2)
00244            ENCODE(6, NVFMT, OUTREC(L1) )   NV
00247            ENCODE(6, PCTFMT, OUTREC(L2) )   PCT
00252         20 CONTINUE
00252      C
00254            WRITE(6,2000)   NL , OUTREC
00254      C
00263      2000 FORMAT( /  2X, I4, 8X,  4( A6, 3X, A6, 6X )  )
00263      C
00264         30 CONTINUE
00264      C
00266         40 CONTINUE
00266      C
00266      C
00270            RETURN
00270      C
00271            END

   END OF COMPILATION:        NO  DIAGNOSTICS.
HISPFC          SYMBOLIC                                  21 OCT 76  17:11:09   0  01526722    14    99  (DELETED)
HISPFC  CODE    RELOCATABLE                               21 OCT 76  17:11:09   1  01531474    36     1  (DELETED)
                                                                                 0  01531540    14    27
```

85

```
@  FOR,*   GABPR,GABPR                                                                    26 OCT 76          18:50:31.869
UNIVAC 1108 FORTRAN V EXEC II LEVEL 25A  -(EXEC8 LEVEL E12010010A)
THIS COMPILATION WAS DONE ON 26 OCT 76 AT 18:50:31

   SUBROUTINE PRGAB      ENTRY POINT 000674

   STORAGE USED: CODE(1) 000705; DATA(0) 001004; BLANK COMMON(2) 000000

    COMMON BLOCKS:

    0003    ALL     000012
    0004    ST1011  000020
    0005    ST5X6   000040
    0006    STCOMP  000374
    0007    PGLABL  000075
    0010    HDATA   000026

   EXTERNAL REFERENCES (BLOCK, NAME)

    0011    NNCOD$
    0012    NIO2$
    0013    NWDU$
    0014    NIO1$
    0015    NERR3$

   STORAGE ASSIGNMENT  (BLOCK, TYPE, RELATIVE LOCATION, NAME)

    0001    000050 1L        0000    000723 1001F     0000    000730 1002F     0000    000735 1003F     0000    000742 1004F
    0000    000745 1005F     0000    000754 1006F     0001    000321 11L       0001    000366 12L       0001    000513 14L
    0001    000565 16L       0001    000112 221G      0001    000136 231G      0001    000151 240G      0001    000374 373G
    0001    000534 467G      0001    000600 514G      0010    000006 AA1       0004 R  000000 A1        0003 L  000010 A1B1
    0006 R  000160 A10       0006 R  000170 A11       0006 R  000200 A12       0006 R  000210 A13       0006 R  000220 A14
    0006 R  000230 A15       0006 R  000240 A16       0006 R  000250 A17       0006 R  000260 A18       0006 R  000270 A19
    0005 R  000000 A2        0006 R  000272 A20       0006 R  000274 A21       0006 R  000304 A22       0006 R  000314 A23
    0006 R  000334 A24       0006 R  000344 A25       0006 R  000354 A26       0006 R  000356 A27       0006 R  000360 A28
    0006 R  000362 A29       0006 R  000040 A3        0006 R  000060 A4        0006 R  000100 A5        0006 R  000120 A6
    0006 R  000130 A7        0006 R  000140 A8        0006 R  000150 A9        0000 R  000322 BLANK     0010    000002 B0
    0004 R  000004 B1        0006 R  000164 B10       0006 R  000174 B11       0006 R  000204 B12       0006 R  000214 B13
    0006 R  000224 B14       0006 R  000234 B15       0006 R  000244 B16       0006 R  000254 B17       0006 R  000264 B18
    0006 R  000271 B19       0005 R  000004 B2        0006 R  000273 B20       0006 R  000300 B21       0006 R  000310 B22
    0006 R  000320 B23       0006 R  000340 B24       0006 R  000350 B25       0006 R  000355 B26       0006 R  000357 B27
    0006 R  000361 B28       0006 R  000363 B29       0006 R  000044 B3        0006 R  000064 B4        0006 R  000104 B5
    0006 R  000124 B6        0006 R  000134 B7        0006 R  000144 B8        0006 R  000154 B9        0000 R  000045 CHSEP
    0000 R  000320 DASH      0003 L  000011 ELFLG     0000 R  000000 HDGAB     0000 I  000707 I         0006 I  000364 ICA
    0006 I  000370 ICB       0010 I  000013 IDERTS    0010 I  000021 IEW       0000    000763 INJP$     0003 I  000000 INTYPE
    0010 I  000012 ISITE     0006 I  000000 ITRUNC    0000 I  000716 IXMAX     0000 I  000715 IXMIN     0000 I  000712 J
    0000 I  000711 K         0000 I  000721 L         0000 I  000706 LAST      0010 I  000022 LATDEG    0010 I  000023 LATMIN
    0000 I  000075 LINE1     0000 I  000117 LINE2     0000 I  000135 LINE3     0000 I  000203 LINE4     0000 I  000251 LINE5
    0000 I  000275 LINE6     0010 I  000024 LONDEG    0010 I  000025 LONMIN    0000 I  000722 M         0010 I  000014 MISDAY
    0010 I  000015 MISHR     0010 I  000016 MISMIN    0010 I  000017 MISSEC    0000 I  000720 N         0000 I  000710 NBEG
    0003    000003 NC        0000 I  000713 NCH       0000 I  000704 NCHAN     0003 I  000002 NCHOUT    0003 I  000004 NCVEC
    0007 I  000072 NFPROC    0003 I  000001 NIMAGE    0010 I  000020 NORSOU    0000 I  000714 NUMCH     0000 I  000705 NWRITE
    0000 R  000717 PAGFLG    0007 R  000000 PAGHD1    0007 R  000053 PAGHD2    0000 R  000321 PGSKP     0007 I  000074 PSUNEL
    0004 R  000010 P1        0005 R  000024 P2        0000 R  000562 P2PT2     0000 R  000646 P2PT3     0000 R  000323 P2IL1
```

```
0000 R 000363 P21L2      0006   000324 P23        0006 R 000050 P3         0000 R 000500 P3L1       0000 R 000533 P3PT1
0006 R 000070 P4         0000 R 000417 P4L1       0000 R 000450 P4L23      0006 R 000110 P5         0010 R 000001 SUNAZ
0010 I 000000 SUNEL      0004 R 000014 S1         0005 R 000030 S2         0006   000330 S23        0006 R 000054 S3
0006 R 000074 S4         0006 R 000114 S5         0007 I 000073 TLABEL     0005 R 000014 XMAX       0005 R 000010 XMIN
0005   000034 XMNDEV     0005   000020 XRANGE
```

```
00101      1•              COMPILER ( DATA=SHORT )
00101      2•      C
00101      3•      C
00101      4•      C
00103      5•              SUBROUTINE   PRGAB
00103      6•      C
00103      7•      C
00105      8•              LOGICAL   A181 , ELFLG
00105      9•      C
00106     10•              INTEGER   TLABEL, PSUNEL , SUNEL
00106     11•      C
00107     12•              PARAMETER   MCH=4
00107     13•      C
00110     14•              DIMENSION  HDGAB(37) , CHSEP(24) , LINE1(18), LINE2(14)
00110     15•      C
00111     16•              DIMENSION  LINE3(38), LINE4(38), LINE5(20), LINE6(19), NCVEC(MCH)
00111     17•      C
00112     18•              DATA  DASH/'------'/ ,  PGSKP/'(1H1) '/
00112     19•      C
00115     20•              DATA    BLANK/'      ' /
00115     21•      C
00117     22•              DATA  HDGAB/'(// T75,''MOD.''/ T26,''AREA'', T49,''TRUNCATED'' ,
00117     23•      C
00117     24•             1 T73, ''STD DEV'', T84, ''AVERAGE'', T95, ''PERCENT'' / 17X ,
00117     25•      C
00117     26•             2  3A6,A1  , 2X, 5A6, 3X, 3( A6,A2,3X ) / T17,''(10  X  11)'', T29,
00117     27•      C
00117     28•             3''(5  X  6 )'' ) ' /
00117     29•      C
00121     30•              DATA     CHSEP/'(1H  1X,''----------
00121     31•      C
00121     32•             1----------
00121     33•      C
00121     34•             2----------'' )' /
00121     35•      C
00123     36•              DATA  LINE1/'(1HO 1X,''BAND'', 1X, I2 , T29,''MIN='', I3, T40 ,
00123     37•      C
00123     38•             1 ''MIN='', I3,  T51, ''MIN='', I3 , T62, ''MIN='', I3)' /
00123     39•      C
00125     40•              DATA  LINE2/'(1H   T29,''MAX='', I3 , T40,''MAX='', I3 , T51 ,
00125     41•      C
00125     42•             2 ''MAX='', I3 , T62,''MAX='', I3 )' /
00125     43•      C
00125     44•      C
00127     45•              DATA  LINE3/'(1HO T12,''GAIN'', T18,''A1='', F6.1, T29,''A2='' ,
00127     46•      C
00127     47•             1 F6.1 , T40,''A3='', F6.1 , T51,''A4='', F6.1 , T62,''A5='', F6.1,
00127     48•      C
00127     49•             2  T73,''A6='', F6.1 , T84,''A7='', F6.1 , T95,''A8='', F6.1, T106,
```

```
00127     50•      C
00127     51•           3  ''A9='', F6.1, T117,''A10='', F6.1) ' /
00127     52•      C
00131     53•           DATA  LINE4/'(1HO T12,''BIAS'', T18,''B1='', F6.1, T29,''B2='' ,
00131     54•      C
00131     55•          1 F6.1 , T40,''B3='', F6.1 , T51,''B4='', F6.1 , T62,''B5='', F6.1,
00131     56•      C
00131     57•          2  T73,''B6='', F6.1 , T84,''B7='', F6.1 , T95,''B8='', F6.1, T106,
00131     58•      C
00131     59•          3  ''B9='', F6.1, T117,''B10='', F6.1) ' /
00131     60•      C
00133     61•           DATA  LINE5/'(1HO T12,''MEAN'', T18,''P1='', F6.1, T29,''P2='' ,
00133     62•      C
00133     63•          1 F6.1 , T40,''P3='', F6.1 , T51,''P4='', F6.1 , T62,''P5='', F6.1
00133     64•      C
00133     65•          2)' /
00133     66•      C
00135     67•           DATA  LINE6/'(1HO T10,''STD DEV S1='', F6.1, T29,''S2='', F6.1 ,
00135     68•      C
00135     69•          1  T40,''S3='', F6.1  , T51,''S4='', F6.1, T62,''S5='', F6.1)'/
00135     70•      C
00137     71•           DIMENSION  P2IL1(32) , P2IL2(28)
00137     72•      C
00140     73•           DATA  P2IL1/'(/// 1X,''BAND'', T12,''GAIN'', T20,''A11='', F6.1,
00140     74•      C
00140     75•          1 T32,''A12='', F6.1, T44,''A13='', F6.1, T56,''A14='', F6.1, T68,
00140     76•      C
00140     77•          2 ''A15='', F6.1, T80,''A16='', F6.1, T92,''A17='', F6.1, T104,
00140     78•      C
00140     79•          3 ''A18='', F6.1 / 2X, 2)' /
00140     80•      C
00140     81•      C
00142     82•           DATA  P2IL2/'(1H+  T12,''BIAS'', T20,''B11='', F6.1, T32,''B12='',
00142     83•      C
00142     84•          1 F6.1, T44,''B13='', F6.1, T56,''B14='', F6.1, T68,''B15='', F6.1,
00142     85•      C
00142     86•          2 T80,''B16='', F6.1, T92,''B17='', F6.1, T104,''B18='', F6.1/)'/
00142     87•      C
00142     88•      C
00144     89•           DIMENSION   P4L1(25) ,  P4L23(24)
00144     90•      C
00145     91•           DATA   P4L1/'(//  1X,''BAND'',1X,I2,  T20,''MIN='', I4, T30,
00145     92•      C
00145     93•          1 ''MAX='', I4, T58,''CA='', I4, T67,''CB='', I4, T84,''CA='', I4,
00145     94•      C
00145     95•          2 T93,''CB='', I4 //T64,''(P1)'', T90,''(P2)''/)' /
00145     96•      C
00145     97•      C
00147     98•           DATA   P4L23/'( /  T5,''GAIN'', T23,''A23='', F6.1, T60,''A24='',
00147     99•      C
00147    100•          1 F6.1, T86,''A25='', F6.1 /1H  T5,''BIAS'', T23,''B23='', F6.1,
00147    101•      C
00147    102•          2 T60,''B24='', F6.1, T86,''B25='', F6.1/)' /
00147    103•      C
00147    104•      C
00151    105•           DIMENSION   P3L1(27) , P3PT1(23), P2PT2(52), P2PT3(30)
00151    106•      C
00152    107•           DATA  P3L1/'(/// T28,''TRUNCATED @  P2  +/- 3 S2'', T76,''TRUNCATE
```

```
C
      1D @  P2(NEW) +/- 3 S2(NEW)'' / T27,''-------------------------'',
C
      2 T75,''-----------------------------------'' /)' /
C
C
       DATA  P3PT1/'(/ T2,''BAND'', I4 // T2,''GAIN , BIAS'', T28,
C
      1 ''A21='', F6.1, T40,'','', T43,''B21='', F6.1, T79,''A22='',F6.1,
C
      2 T91,'','', T94,''B22='', F6.1 / )' /
C
C
       DATA  P2PT2/'(////T31,''MAX(HI)/MIN(LO)'', T71,''P1/S1'', T95,
C
      1 ''P2/S2'' / T31,''----------------'', T68,''------------'', T92,
C
      2 ''------------'' //  T7,''BANDS'', T21,''GAIN'', T35,''A19='',
C
      3 F6.1, T69,''A26='', F6.1, T93,''A28='', F6.1 // T5,''1, 2, 2(4)''
C
      4 , T21,''BIAS'', T35,''B19='', F6.1, T69,''B26='', F6.1, T93,
C
      5 ''B29='', F6.1 /   )' /
C
C
       DATA  P2PT3/'(/// T7,''BANDS'', T21,''GAIN'', T35,''A20='', F6.1,
C
      1 T69,''A27='', F6.1, T93,''A29='', F6.1 // T5,''2, 3, 2(4)'', T21,
C
      2 ''BIAS'', T35,''B20='', F6.1, T69,''B27='', F6.1, T93,''B29='',
C
      3 F6.1 /  )' /
C
C
C
C
       COMMON /ALL/ INTYPE, NIMAGE, NCHOUT, NC, NCVEC, A1B1, ELFLG
C
       COMMON /ST1011/ A1(MCH), B1(MCH), P1(MCH), S1(MCH)
C
C
       COMMON /ST5X6/ A2(MCH), B2(MCH), XMIN(MCH), XMAX(MCH),
      1   XRANGE(MCH), P2(MCH), S2(MCH), XMNDEV(MCH)
C
C
       COMMON /STCOMP/  ITRUNC(4,MCH,2) , A3(MCH), B3(MCH), P3(MCH),
C
      1                 S3(MCH), A4(MCH), B4(MCH), P4(MCH), S4(MCH),
C
      2                 A5(MCH), B5(MCH), P5(MCH), S5(MCH), A6(MCH),
C
      3                 B6(MCH), A7(MCH), B7(MCH), A8(MCH), B8(MCH)
C
      4 ,A9(MCH), B9(MCH), A10(MCH), B10(MCH), A11(MCH), B11(MCH),
C
      5 A12(MCH), B12(MCH), A13(MCH), B13(MCH), A14(MCH), B14(MCH),
C
```

ORIGINAL PAGE IS
OF POOR QUALITY

```
00165     164*          6 A15(MCH), B15(MCH), A16(MCH), B16(MCH), A17(MCH), B17(MCH),
00165     165*     C
00165     166*          7 A18(MCH), B18(MCH), A19, B19,A20,B20,A21(MCH),B21(MCH),A22(MCH),
00165     167*     C
00165     168*          8 B22(MCH), A23(MCH), B23(MCH), P23(MCH), S23(MCH), A24(MCH),
00165     169*     C
00165     170*          9 B24(MCH), A25(MCH), B25(MCH), A26, B26, A27, B27, A28, B28,
00165     171*     C
00165     172*          * A29, B29, ICA(MCH), ICB(MCH)
00165     173*     C
00165     174*     C
00166     175*           COMMON  /PGLABL/ PAGHD1(43), PAGHD2(15), NFPROC, TLABEL, PSUNEL
00166     176*     C
00166     177*     C
00167     178*           COMMON /HDATA/ SUNEL,SUNAZ,BO(MCH),AA1(MCH),ISITE,IDERTS,MISDAY,
00167     179*     C
00167     180*          1                MISHR,MISMIN,MISSEC,NORSOU,IEW,LATDEG,LATMIN,
00167     181*     C
00167     182*          2                LONDEG,LONMIN
00167     183*     C
00167     184*     C
00167     185*     C
00167     186*     C
00170     187*           IF( INITYPE .NE. 3 )  GO TO 1
00170     188*     C
00172     189*           ENCODE( 24, 1001, LINE3(3) )
00172     190*     C
00174     191*      1001 FORMAT( 24HIN',  A6,              T2  )
00174     192*     C
00175     193*           ENCODE ( 24, 1002, LINE4(3) )
00175     194*     C
00177     195*      1002 FORMAT( 24HAS',  A6,              T2  )
00177     196*     C
00200     197*           ENCODE ( 24, 1003, LINE5(3) )
00200     198*     C
00202     199*      1003 FORMAT( 24HAN',  A6,              T2  )
00202     200*     C
00203     201*           ENCODE ( 12, 1004, LINE6(4) )
00203     202*     C
00205     203*      1004 FORMAT( 12H',  A6,             )
00205     204*     C
00206     205*           ENCODE ( 36, 1005, LINE3(29)  )
00206     206*     C
00210     207*      1005 FORMAT( 36H  2A6  )                                  )
00210     208*     C
00211     209*           ENCODE ( 36, 1005, LINE4(29) )
00211     210*     C
00211     211*     C
00213     212*        1  NCHAN = NCHOUT
00214     213*           NWRITE = NCHAN/4 + 1
00214     214*     C
00215     215*           IF ( NCHAN .GE. 4 .AND. MOD(NCHAN,4) .EQ. 0)  NWRITE = NCHAN/4
00217     216*           LAST = 0
00217     217*     C
00220     218*           DO  20  I=1,NWRITE,1
00223     219*           NBEG = LAST + 1
00224     220*           LAST = NBEG + 3
00225     221*           IF ( I .EQ. NWRITE )   LAST = NCHAN
```

```
00225      C
00227            WRITE(6, HDGAB )    (  DASH- K=1,15 )
00235            WRITE(6 , CHSEP )
00235      C
00237            DO  10  J=NBEG,LAST,1
00237      C
00242            NCH = J
00243            NUMCH = NCVEC(NCH)
00244            IXMIN = XMIN(NCH)
00244      C
00245            WRITE(6, LINE1 )  NUMCH , IXMIN, ITRUNC(1,NCH,1), ITRUNC(2,NCH,1),
00245      C
00245           1                  ITRUNC(3,NCH,1)
00245      C
00254            IXMAX = XMAX(NCH)
00254      C
00255            WRITE(6,  LINE2 )  IXMAX, ITRUNC(1,NCH,2), ITRUNC(2,NCH,2),
00255      C
00255           1                  ITRUNC(3,NCH,2)
00255      C
00263            WRITE(6, LINE3 )  A1(NCH), A2(NCH), A3(NCH), A4(NCH), A5(NCH) ,
00263      C
00263           1                 A6(NCH), A7(NCH), A8(NCH)
00263      C
00263           2               , A9(NCH) , A10(NCH)
00263      C
00277            WRITE(6,  LINE4 )  B1(NCH), B2(NCH), B3(NCH), B4(NCH), B5(NCH) ,
00277      C
00277           1                 B6(NCH), B7(NCH), B8(NCH)
00277      C
00277           2               , B9(NCH) , B10(NCH)
00277      C
00313            WRITE(6,  LINE5 )  P1(NCH), P2(NCH), P3(NCH), P4(NCH), P5(NCH)
00313      C
00322            WRITE(6,  LINE6 )  S1(NCH), S2(NCH), S3(NCH), S4(NCH), S5(NCH)
00322      C
00331            WRITE(6, CHSEP )
00331      C
00331      C
00333       10   CONTINUE
00333      C
00333      C
00335            ASSIGN  12  TO PAGFLG
00335      C
00335      C
00336       11   IF ( INTYPE .EQ. 1)  WRITE(6, PAGHD1) TLABEL, LATDEG, LATMIN,
00336      C
00336           1 NORSOU, NFPROC, ISITE, IDERTS, MISDAY, MISHR, MISMIN, MISSEC,
00336      C
00336           2 LONDEG, LONMIN, IEW, PSUNEL, SUNAZ
00336      C
00336      C
00361            IF ( INTYPE .EQ. 3) WRITE(6,PAGHD2) NFPROC,TLABEL,NIMAGE,PSUNEL
00361      C
00361      C
00370            GO TO PAGFLG
00370      C
00371       12   N = 0
```


ORIGINAL PAGE IS
OF POOR QUALITY

```
00371     282•      C
00372     283•            DO  13  K=NBEG,LAST,1
00375     284•            N = N + 1
00376     285•            NUMCH = NCVEC(K)
00376     286•      C
00377     287•            WRITE(6, P21L1 )  A11(N), A12(N), A13(N), A14(N), A15(N), A16(N),
00377     288•      C
00377     289•           1                   A17(N), A18(N), NUMCH
00377     290•      C
00377     291•      C
00412     292•            WRITE(6, P21L2 ) B11(N), B12(N), B13(N), B14(N), B15(N), B16(N),
00412     293•      C
00412     294•           1                  B17(N), B18(N)
00412     295•      C
00412     296•      C
00424     297•            WRITE(6, CHSEP )
00424     298•      C
00426     299•        13  CONTINUE
00426     300•      C
00430     301•            WRITE(6, 1006 )
00430     302•      C
00432     303•            WRITE(6, P2PT2 )  A19, A26, A28, B19, B26, B28
00432     304•      C
00442     305•            WRITE(6, CHSEP )
00442     306•      C
00444     307•            WRITE(6, P2PT3 )   A20, A27, A29, B20, B27, B29
00444     308•      C
00454     309•            WRITE(6, CHSEP )
00454     310•      C
00454     311•      C
00456     312•            ASSIGN  14  TO PAGFLG
00456     313•      C
00457     314•            GO TO 11
00457     315•      C
00457     316•      C
00460     317•        14  WRITE(6, 1006 )
00460     318•      C
00462     319•       1006 FORMAT(/// )
00462     320•      C
00463     321•            WRITE(6, P3L1 )
00463     322•      C
00465     323•            N = 0
00466     324•            DO  15  L=NBEG,LAST,1
00471     325•            N = N + 1
00472     326•            NUMCH = NCVEC(L)
00472     327•      C
00473     328•            WRITE(6, P3PT1 )  NUMCH, A21(N), B21(N), A22(N), B22(N)
00473     329•      C
00502     330•            WRITE(6, CHSEP )
00502     331•      C
00504     332•        15  CONTINUE
00504     333•      C
00504     334•      C
00506     335•            ASSIGN  16  TO PAGFLG
00506     336•      C
00507     337•            GO TO 11
00507     338•      C
00510     339•        16  N = 0
```

```
00510      C
00511            WRITE(6, 1006 )
00511      C
00513            DO  17  M=NBEG,LAST,1
00516            N = N + 1
00517            NUMCH = NCVEC(M)
00517      C
00520            WRITE(6, CHSEP )
00520      C
00520      C
00522            WRITE(6, P4L1 )  NUMCH, ITRUNC(4,N,1), ITRUNC(4,N,2), ICA(N),
00522      C
00522           1                 ICB(N), ICA(N), ICB(N)
00522      C
00522      C
00533            WRITE(6, P4L23 )  A23(N), A24(N), A25(N), B23(N), B24(N), B25(N)
00533      C
00543        17  CONTINUE
00543      C
00545            WRITE(6, CHSEP )
00545      C
00545      C
00547        20  CONTINUE
00547      C
00551            RETURN
00551      C
00552            END

    END OF COMPILATION:        NO  DIAGNOSTICS.
GABPR            SYMBOLIC                                  21 OCT 76  17:11:12   0  01532332    14    366  (DELETED)
GABPR    CODE    RELOCATABLE                               21 OCT 76  17:11:12   1  01544336    48      1  (DELETED)
                                                                                   0  01544416    14     93
```

93

```
@ FOR,*   TAPERD,TAPERD                                                                    26 OCT 76          18:50:34.607
UNIVAC 1108 FORTRAN V EXEC II LEVEL 25A  -(EXEC8 LEVEL E12010010A)
THIS COMPILATION WAS DONE ON 26 OCT 76 AT 18:50:34

   SUBROUTINE TAPERD     ENTRY POINT 002012
              TAPHDR     ENTRY POINT 002015
              FLDINT     ENTRY POINT 002020
              LINERD     ENTRY POINT 002023

   STORAGE USED: CODE(1) 002375; DATA(0) 016344; BLANK COMMON(2) 000000

   EXTERNAL REFERENCES (BLOCK, NAME)

    0003    KTRAN
    0004    CMERR
    0005    UNPAK1
    0006    UNPACK
    0007    IDHEAD
    0010    BYTRAN
    0011    NWDUS
    0012    NIO2S
    0013    NEXPIS
    0014    NIO1S
    0015    NERR3S
    0016    NERR4S

   STORAGE ASSIGNMENT  (BLOCK, TYPE, RELATIVE LOCATION, NAME)

    0001    002250 10L      0001    000406 100L     0001    002036 1001G    0001    000425 105L     0001    000461 110L
    0001    000535 120L     0001    000605 126L     0001    000624 127L     0001    000643 130L     0001    000661 132L
    0001    000741 136L     0001    000755 138L     0001    000766 139L     0001    000776 140L     0001    001016 145L
    0001    001034 146L     0001    001211 150L     0001    001244 160L     0001    000121 167G     0001    001254 180L
    0001    001303 195L     0001    001357 196L     0001    000077 20L      0001    002266 20L      0001    001301 200L
    0001    001405 201L     0001    001424 205L     0001    001432 210L     0001    001472 220L     0001    001545 231L
    0001    001564 235L     0001    000240 236G     0001    001632 240L     0001    000114 25L      0001    001643 250L
    0001    001712 255L     0001    001725 257L     0001    001737 260L     0001    001743 265L     0000    015520 270F
    0000    015530 280F     0000    015540 290F     0001    002304 30L      0000    015547 300F     0001    000131 31L
    0000    015557 310F     0001    000135 32L      0000    015567 320F     0000    015613 330F     0000    015637 340F
    0001    000176 35L      0000    015731 350F     0000    015742 360F     0000    015756 370F     0001    000573 375G
    0000    015773 380F     0000    016006 390F     0001    000236 40L      0000    016022 400F     0000    016035 410F
    0000    016051 420F     0000    016060 430F     0000    016075 440F     0000    016114 470F     0000    016124 481F
    0001    002161 5L       0001    000303 50L      0000    016152 500F     0001    001124 523G     0001    001132 526G
    0001    002244 6L       0001    000313 60L      0000    016167 600F     0000    016174 610F     0001    001404 622G
    0000    016205 650F     0000    016213 700F     0001    000344 80L      0000    016221 800F     0001    000374 90L
    0000    016231 900F     0000 I  015504 ADD      0000 I  015473 ANC      0000 I  016246 ANCKNG   0000 I  015515 BEGWRD
    0000 I  015372 BIT      0000 I  015454 BUF      0000 I  016252 DOI      0000 I  015453 DSL      0000 I  015475 FC
    0000 I  015461 FLINE    0000 I  015441 FORMAT   0000 I  015222 FRM      0000 I  015457 FSCAN    0000 I  015463 FSKIP
    0000 I  015422 HWRD     0000 I  015442 I        0000 I  015502 IADR     0000 I  015516 IBACK    0000 I  015514 IBIT
    0000 I  000000 IBUF     0000 I  015240 IBYTE    0000 I  016243 ID       0000 I  015456 IFRST    0000 I  015510 IFT
    0000 I  015446 INB      0000 I  015507 INCBIT   0000    016301 INJPS    0000    016305 INJPS    0000    016311 INJPS
    0000 I  015513 IP       0000 I  015452 IRD      0000 I  015500 IREC     0000 I  015226 IST      0000 I  015440 ISTAT
    0000 I  015450 ITEMP    0000 I  015517 ITRY     0000 I  015436 IUNIT    0000 I  015445 IWD      0000 I  015511 J
    0000 I  015512 JJ       0000 I  015276 JREC     0000 I  015477 K        0000 I  015437 KBUF     0000 I  015447 KNB
    0000 I  015451 KPTS     0000 I  015334 LBUF     0000 I  015476 LC       0000 I  015472 LINC     0000 I  015465 LINEND
```


94

```
0000 I 015466 LININC     0000 I 015460 LINSTR     0000 I 015462 LSKIP      0000 I 015444 MAXREC     0000 I 015506 NB
0000 I 016251 NBITS      0000 I 015474 NBUFS      0000 I 016247 NC         0000 I 016254 NCAR       0000 I 016244 NCPR
0000 I 015443 NCS        0000 I 016253 NDSPR      0000 I 016245 NPRC       0000 I 016243 NRPDS      0000 I 016250 NS
0000 I 015501 NSAMP      0000 I 015464 NSCAN      0000 I 015221 PAGSKP     0000 I 015220 READY      0000 I 015455 REC
0000 I 015470 SAMEND     0000 I 015471 SAMINC     0000 I 015467 SAMSTR     0000 I 015503 SCAN       0000 I 015506 SKPBIT
0000 I 016256 SMSTR      0000 I 015505 STOBIT     0000 I 016255 SVD
```

```
00100      1•      C•                                                                    TAPE0080
00101      2•            SUBROUTINE TAPERD                                               TAPE0000
00101      3•      C•••••••••••••••••••••••••••••••••••••••••••••••••••••••••••••••••••••TAPE0010
00101      4•      C•                                                                    TAPE0020
00101      5•      C•    TAPERD READS THE MULTISPECTRAL SCANNER DATA TAPE, UNPACKS THE    TAPE0030
00101      6•      C•    REQUESTED DATA AND RETURNS IT UNPACKED TO THE CALLING ROUTINE.   TAPE0040
00101      7•      C•    THERE ARE THREE ENTRY POINTS TO THE SUBROUTINE. TAPHDR, FLDINT   TAPE0050
00101      8•      CC•    AND LINERD                                                     TAPE0060
00101      9•      C•                                                                    TAPE0070
00101     10•      C•    TAPHDR MUST BE CALLED ONCE TO READ THE HEADER RECORD AND UNPACK  TAPE0090
00101     11•      C•     NECESSARY DATA FROM THE RECORD                                TAPE0100
00101     12•      C•                                                                    TAPE0110
00101     13•      C•    CALL TAPHDR(DATAPE,FILENO)
00101     14•      C•        DATAPE-INPUT UNIT NUMBER FOR DATA TAPE                      TAPE0140
00101     15•      C•        FILENO - NO. OF E-O-F'S ON DATA TAPE USER WISHES TO READ OVER
00101     16•      C•                 IN ORDER TO POSITION TAPE TO DESIRED FILE
00101     17•      C•                                                                    TAPE0180
00101     18•      C•    FLDINT MUST BE CALLED ONCE FOR EACH FIELD, THE TAPE IS POSITIONED TAPE0190
00101     19•      C•    TO THE CORRECT RECORD AND PARAMETERS ARE INITIALIZED FOR THE FIELDTAPE0200
00101     20•      C•                                                                    TAPE0210
00101     21•      C•    CALL FLDINT(BLOCK,FETVEC,NOFEAT)                                TAPE0220
00101     22•      C•        BLOCK(1)=LINE START                                         TAPE0230
00101     23•      C•        BLOCK(2)=LINE END                                           TAPE0240
00101     24•      C•        BLOCK(3)=LINE INCREMENT                                     TAPE0250
00101     25•      C•        BLOCK(4)=SAMPLE START                                       TAPE0260
00101     26•      C•        BLOCK(5)=SAMPLE END                                         TAPE0270
00101     27•      C•        BLOCK(6)=SAMPLE INCREMENT                                   TAPE0280
00101     28•      C•        FETVEC- (INPUT) VECTOR CONTAINING FEATURES REQUESTED        TAPE0290
00101     29•      C•        NOFEAT (INPUT) NO. OF FEATURES IN FETVEC                    TAPE0300
00101     30•      C•                                                                    TAPE0310
00101     31•      C•    LINERD MUST BE CALLED ONCE FOR EACH SCAN LINE IN THE FIELD      TAPE0320
00101     32•      C•                                                                    TAPE0330
00101     33•      C•    CALL LINERD(IDATA,ENDTAP)
00101     34•      C•        IDATA-(OUTPUT) ARRAY CONTAINING UNPACKED DATA               TAPE0350
00101     35•      C•        ENDTAP - TIGGER INDICATING WHETHER OF NOT AN E-O-F HAS BEEN
00101     36•      C•                 REACHED  WHILE TRYING TO READ A GIVEN  SCAN LINE NO.
00101     37•      C•                 IF AN E-O-F IS FOUND ENDTAP = -1, OTHERWISE, ENDTAP
00101     38•      C•                 = 0.
00101     39•      C•                                                                    TAPE0360
00101     40•      C•                                                                    TAPE0370
00101     41•      C•••••••••••••••••••••••••••••••••••••••••••••••••••••••••••••••••••••TAPE0380
00103     42•            DIMENSION ID(20),IBUF(6800)                                   TAPE0390
00104     43•            IMPLICIT INTEGER(A-Z)                                         TAPE0440
00105     44•            LOGICAL READY                                                 TAPE0400
00105     45•      C•    READY IS A LOGICAL INDICATOR TO TEST WHETHER THE TAPE HAS BEEN  TAPE0410
00105     46•      C•    POSITIONED AND PARAMETERS SET FOR A FIELD                       TAPE0420
00106     47•            DATA READY/.FALSE./
00106     48•      C
```

```
00106     49•      C
00110     50•            DATA   PAGSKP/'(1H1) ' /
00110     51•      C
00110     52•      C
00112     53•            DIMENSION FRM(2,2)                                                    TAPE0450
00113     54•            DATA FRM/'UNIVERSAL   ','LARSYS 2'/                                   TAPE0460
00115     55•            DIMENSION IST(10),IBYTE(30),JREC(30),LBUF(30)
00115     56•      C•                                                                          TAPE0480
00115     57•      C•    THE ARRAYS BIT,NB,AND HARD ARE PRECALCULATED WORD AND BIT             TAPE0490
00115     58•      C•    POSITIONS OF INFORMATION IN THE HEADER RECORD OF THE UNIVERSAL        TAPE0500
00115     59•      C•    FORMAT WHICH MUST BE EXTRACTED.                                       TAPE0510
00115     60•      C•                                                                          TAPE0520
00115     61•      C•      NRPDS - NO. OF RECORDS PER DATA SET                                 TAPE0530
00115     62•      C•      NCPR - NO. OF CHANNELS PER RECORD ON RECORDS PAST ANCILLARY RECO    TAPE0540
00115     63•      C•      NPRC - NO. OF PHYSICAL RECORDS PER CHANNEL                          TAPE0550
00115     64•      C•      ANCLNG - ANCILLARY LENGTH IN BYTES                                  TAPE0560
00115     65•      C•      NC - NO. OF CHANNELS                                                TAPE0570
00115     66•      C•      NS - NO. OF SAMPLES PER CHANNEL PER SCAN                            TAPE0580
00115     67•      C•      NBITS - NO. OF BITS PER PIXEL                                       TAPE0590
00115     68•      C•      DOI - DATA ORDER INDICATOR                                          TAPE0600
00115     69•      C•      NDSPR - NO. OF DATA SETS PER RECORD                                 TAPE0610
00115     70•      C•      NCAR - NO. OF CHANNELS OF VIDEO DATA ON SAME RECORD                 TAPE0620
00115     71•      C•              WITH ANCILLARY DATA)                                        TAPE0630
00115     72•      C•      SVD - START OF VIDEO DATA. (BYTE POSITION WITHIN DATA FOR           TAPE0640
00115     73•      C•            A GIVEN CHANNEL)                                              TAPE0650
00115     74•      C•                                                                          TAPE0660
00116     75•            DIMENSION BIT(12),NB(12),HARD(12)
00117     76•            DATA HARD/23,23,23,24,20,397,21,24,395,397,21,24/
00121     77•            DATA BIT/32,16,24,4,26,32,0,20,32,16,8,26/
00123     78•            DATANB/8,8,8,16,8,16,8,8,8,16,16,16/
00125     79•            EQUIVALENCE (ID(1),NRPDS ),(ID(2),NCPR  ),                          TAPE0710
00125     80•           •            (ID(3),NPRC  ),(ID(4),ANCLNG),                          TAPE0720
00125     81•           •            (ID(5),NC    ),(ID(6),NS    ),                          TAPE0730
00125     82•           •            (ID(7),NBITS ),(ID(8),DOI   ),                          TAPE0740
00125     83•           •            (ID(9),NDSPR ),(ID(10),NCAR ),                          TAPE0750
00125     84•           •            (ID(11),SVD)                                            TAPE0760
00126     85•            EQUIVALENCE (IB(12),SMSTR)
00126     86•      C•                                                                          TAPE0780
00126     87•      C•                                                                          TAPE0790
00126     88•      C•    ENTRY FOR READING HEADER INFORMATION                                  TAPE0800
00126     89•      C•                                                                          TAPE0810
00127     90•            ENTRY  TAPHDR ( DATAPE, FILENO, FMT )
00127     91•      C•                                                                          TAPE0840
00127     92•      C•    INFORMATION IN EBCDIC OR IBM FLOATING POINT IS NOT UNPACKED           TAPE0850
00127     93•      C•    FROM THE HEADER RECORD AT THIS TIME.                                  TAPE0860
00127     94•      C•                                                                          TAPE0870
00131     95•            WRITE(6,PAGSKP)
00131     96•      C
00131     97•      C
00133     98•            IUNIT=DATAPE                                                          TAPE0880
00134     99•            KBUF=680                                                              TAPE0890
00134    100•      C•                                                                          TAPE0900
00135    101•            CALL NTRAN(IUNIT,10,22)
00136    102•            IF (FILENO .NE. 0) CALL NTRAN(IUNIT,5,FILENO)
00140    103•            CALL NTRAN(IUNIT,2,KBUF,IBUF,ISTAT,22)                                TAPE0910
00141    104•            IF (ISTAT .EQ. 176)  FORMAT = 2
00143    105•            IF (.STAT .EQ. 680)   FORMAT = 1
00145    106•            IF ( FMT .EQ. 3 )  FORMAT = 3
```

```
00147   107*          IF (ISTAT.GT.0) GO TO 20                                  TAPE0920
00151   108*       10 WRITE (6,280)                                             TAPE0930
00153   109*          WRITE(6,340)
00155   110*          CALL CMERR                                                TAPE0950
00156   111*       20 IF (FORMAT.EQ.1) GO TO 40                                 TAPE0960
00156   112*     C
00160   113*          IF ( FORMAT .EQ. 2 )  GO TO 25
00160   114*     C
00162   115*          IF ( FORMAT .EQ. 3 )  GO TO 31
00162   116*     C
00164   117*          GO TO 265
00164   118*     C
00165   119*       25 CALL  UNPAK1( IBUF )
00166   120*          DO 30 I=1,6                                               TAPE0980
00171   121*       30 CALL UNPACK(ID (I),32)                                    TAPE0990
00171   122*     C
00173   123*          GO TO 32
00173   124*     C
00174   125*       31 NC = 4
00175   126*          NS = 196
00175   127*     C
00176   128*       32 NCS = NC * NS
00177   129*          MAXREC=(NCS*8 + 32)/36 + 2                                TAPE1030
00177   130*     C
00200   131*          IF ( FORMAT .EQ. 3)  MAXREC = ( NCS * 8 )/36 + 1
00200   132*     C
00202   133*          IF(MAXREC.LE.6800)GO TO 35
00204   134*          WRITE(6,330)NC,NS
00210   135*          CALL CMERR
00211   136*       35 CONTINUE
00212   137*          NRPDS=1                                                   TAPE1040
00213   138*          NCAR=NC                                                   TAPE1050
00214   139*          ANCLNG=4                                                  TAPE1060
00214   140*     C
00215   141*          IF ( FORMAT .EQ. 3)  ANCLNG = 0
00215   142*     C
00217   143*          SVD=1                                                     TAPE1070
00220   144*          NBITS=8                                                   TAPE1080
00221   145*          DDI=0                                                     TAPE1090
00222   146*          NCPR=0                                                    TAPE1100
00223   147*          NDSPR=1                                                   TAPE1110
00224   148*          NPRC = 0
00225   149*          WRITE(6,481)FRM(1,2),FRM(2,2),NC,NS
00233   150*          SMSTR=1
00234   151*          GO TO 100                                                 TAPE1120
00234   152*     C*                                                             TAPE1130
00234   153*     C*    UNPACK NECESSARY INFORMATION FROM HEADER RECORD-UNIVERSAL FORMAT  TAPE1140
00234   154*     C*                                                             TAPE1150
00235   155*       40 DO 60 I=1,12
00240   156*          IWD=HWRD(I)                                               TAPE1170
00241   157*          IF ((BIT(I)+NB(I)).LE.36) GO TO 50                        TAPE1180
00243   158*          INB=36-BIT(I)                                             TAPE1190
00244   159*          KNB=NB(I)-INB                                             TAPE1200
00245   160*          ITEMP=FLD(BIT(I),INB,IBUF(IWD))                           TAPE1210
00246   161*          ID(I)=ITEMP*2**KNB + FLD(0,KNB,IBUF(IWD+1))               TAPE1220
00247   162*          GO TO 60                                                  TAPE1230
00250   163*       50 CONTINUE                                                  TAPE1240
00251   164*          ID(I)=FLD(BIT(I),NB(I),IBUF(IWD))                         TAPE1250
```


ORIGINAL PAGE IS OF POOR QUALITY

```
00252          60 CONTINUE                                                      TAPE1260
00254             WRITE(6,481)FRM(1,1),FRM(2,1),NC,NS
00262             MAXREC=600                                                    TAPE1270
00263          70 IF (NPRC.LE.1) GO TO 80                                       TAPE1310
00265             WRITE (6,360)                                                 TAPE1320
00267             CALL CMERR                                                    TAPE1330
00270          80 CONTINUE                                                      TAPE1340
00271             IF(SVD.LE.0)SVD=1
00273             IF(NDSPR.LE.0)NDSPR=1                                         TAPE1350
00275             IF (NBITS.EQ.8) GO TO 90                                      TAPE1360
00277             WRITE (6,390)NBITS                                            TAPE1370
00302             NBITS=8
00303          90 IF( DOI .EQ. 0)  GO TO 100
00305             WRITE (6,400)DOI                                              TAPE1400
00310             CALL CMERR                                                    TAPE1410
00311         100 CONTINUE                                                      TAPE1420
00311       C
00311       C
00311       C**************
00311       C                    UNPACK AND PRINT OUT HEADER INFORMATION PERTINENT
00311       C                    TO  LACIE (ERTS)  IMAGES
00311       C**************
00312             CALL IDHEAD ( IBUF )
00312       C
00312       C
00313             KPTS=0                                                        TAPE1430
00314             IRD=0                                                         TAPE1440
00314       C*                                                                  TAPE1450
00314       C*    DATA SET LENGTH IN BYTES                                      TAPE1460
00315             DSL=ANCLNG+NS*NC                                              TAPE1470
00315       C*                                                                  TAPE1480
00315       C*    READ FIRST DATA SET TO DETERMINE FIRST SCAN LINE NUMBER       TAPE1490
00315       C*                                                                  TAPE1500
00316             BUF=1
00317             REC=0
00320             CALL BUFILL(REC)
00321         105 IF(IST(1).EQ.-1)GO TO 105
00323             IF (IST(1).GT.0) GO TO 110                                    TAPE1530
00325             WRITE (6,350)IST(1)                                           TAPE1540
00330             WRITE (6,340)FRM(1,FORMAT),FRM(2,FORMAT)                      TAPE1550
00334             CALL CMERR                                                    TAPE1560
00335         110 IF(FORMAT.EQ.1)IFRST=FLD(20,16,IBUF(16))                      TAPE1570
00337             IF(FORMAT.EQ.2)IFRST=FLD(0,16,IBUF(1))                        TAPE1580
00337       C
00341             IF ( FORMAT .EQ. 3 )  IFRST = 1
00343             IF (IFRST.GT.0) GO TO 120                                     TAPE1590
00345             WRITE (6,300)                                                 TAPE1600
00347             WRITE (6,340)FRM(1,FORMAT),FRM(2,FORMAT)                      TAPE1610
00353             CALL CMERR                                                    TAPE1620
00354         120 FSCAN=IFRST
00355             WRITE(6,500)IFRST,SMSTR
00355       C
00355       C
00361             RETURN                                                        TAPE1640
00361       C*                                                                  TAPE1650
00361       C*    ENTRY FOR POSITIONING TAPE TO CORRECT SCAN LINE FOR A SPECIFIC FIFTAPE1660
00361       C*                                                                  TAPE1670
00362             ENTRY FLDINT(BLOCK,FETVEC,NOFEAT)                             TAPE1680
```

```
00364          DIMENSION BLOCK(6)                                                TAPE1690
00365          DIMENSION FETVEC(NOFEAT)                                          TAPE1700
00366          ENDTAP = 0
00367          READY = .TRUE.                                                    TAPE1710
00367    C
00370          IF ( FORMAT .EQ. 3)  FSCAN = IFRST
00370    C
00372          IF ( FORMAT .EQ. 3 )   GO TO 127
00372    C
00372    C
00372    C.    CHECK FETVEC
00374          DO 125 I=1,NOFEAT
00377      125 IF(FETVEC(I).GT.NC)GO   126
00402          GO TO 127
00403      126 WRITE(6,470)NC
00406          NOFEAT=I-1
00407          IF(NOFEAT.LE.0)CALL CMERR
00411      127 CONTINUE
00412          LINSTR=BLOCK(1)                                                   TAPE1720
00413          IF (LINSTR.GE.IFRST) GO TO 130                                    TAPE1730
00415          WRITE(6,430)IFRST
00420          CALL CMERR
00421      130 CONTINUE                                                          TAPE1760
00422          IF(BLOCK(2).GE.IFRST)GO TO 132
00424          WRITE(6,430)IFRST
00427          CALL CMERR
00430      132 CONTINUE
00430    C.    FLINE=FIRST SCAN ON RECORD CONTAINING LINSTR                      TAPE1770
00431          FLINE=LINSTR-MOD((LINSTR-IFRST),NDSPR)                            TAPE1780
00432          LSKIP=((FLINE-FSCAN)/NDSPR-1)*NRPDS                               TAPE1790
00433          IF (LSKIP) 135,138,138
00436      135 FSKIP = ((BLOCK(1) - IFRST) / NDSPR ) * NRPDS + 1
00437          IF (FSKIP .GE. IABS(LSKIP))  GO TO 138
00437    C.
00437    C.    ON MULTI-FILE TAPES FOR FILES OTHER THAN FILE 1, DO THE FOLLOWING-
00437    C.        1. BACK SPACE 1 FILE
00437    C.        2. READ FORWARD 1 E-O-F
00437    C.        3. READ FORWARD NO. OF DESIRED RECORDS
00437    C.
00441          IF (FILENO .EQ. 0)  GO TO 136
00443          CALL NTRAN(IUNIT,22,8,-1)
00444          CALL NTRAN(IUNIT,22,8,1)
00445          CALL NTRAN(IUNIT,7,FSKIP)
00446          GO TO 139
00447      136 CONTINUE
00447    C.
00447    C.    FOR FILE 1 DO A REWIND AND SKIP FORWARD THE DESIRED NO. OF RECORDS
00447    C.
00450          CALL NTRAN(IUNIT,22,10,22)
00451          CALL NTRAN(IUNIT,7,FSKIP)
00452          GO TO 139
00452    C.                                                                      TAPE1800
00452    C.    SKIP DOWN THE TAPE TO BEGINNING LINE OF THIS FIELD.               TAPE1810
00452    C.    AND INITIATE READ FOR FIRST DATA SET                              TAPE1820
00452    C.                                                                      TAPE1830
00453      138 IF (FSCAN.EQ.FLINE) GO TO 140                                     TAPE1840
00455          CALL NTRAN(IUNIT,7,LSKIP)                                         TAPE1850
00456      139 REC=0
```

```
00457   281•            CALL BUFILL(REC)
00460   282•            BUF=1
00461   283•            FSCAN=FLINE                                              TAPE1870
00462   284•          140 CONTINUE                                               TAPE1880
00463   285•            NSCAN=LINSTR                                             TAPE1890
00464   286•            IF(BLOCK(5).LE.NS)GO TO 145
00466   287•            WRITE(6,440)NS
00471   288•            CALL CMERR
00472   289•          145 IF(BLOCK(4).LE.NS)GO TO 146
00474   290•            WRITE(6,440)NS
00477   291•            CALL CMERR
00500   292•          146 CONTINUE
00501   293•            LINEND=BLOCK(2)                                          TAPE1910
00502   294•            LININC=BLOCK(3)                                          TAPE1920
00503   295•            SAMSTR=BLOCK(4)                                          TAPE1930
00504   296•            SAMEND=BLOCK(5)                                          TAPE1940
00505   297•            SAMINC=BLOCK(6)                                          TAPE1950
00505   298•      C•    LINC=NO.OF RECORDS TO SKIP AFTER EACH SCCAN LINE         TAPE1960
00506   299•            LINC=(LININC/NDSPR - 1)*NRPDS                            TAPE1970
00507   300•            IF(LINC.LT.0)LINC=0                                      TAPE1980
00507   301•      C•                                                             TAPE1990
00507   302•      C•    ESTABLISH AREAS ON EACH SCAN LINE TO UNPACK              TAPE2000
00507   303•      C•                                                             TAPE2010
00511   304•            ANC=ANCLNG + SAMSTR + SVO - 1                            TAPE2020
00512   305•            IF(FORMAT.EQ.1)ANC=ANC+2                                 TAPE2030
00514   306•            NBUFS=NRPDS/10
00515   307•            IF(MOD(NRPDS,10).NE.0)NBUFS=NBUFS+1
00517   308•            FC=1                                                     TAPE2040
00520   309•            LC=NCAR                                                  TAPE2050
00521   310•            K=1                                                      TAPE2060
00522   311•            DO 190 I=1,NOFEAT                                        TAPE2070
00525   312•            DO 170 IREC=K,NRPDS                                      TAPE2080
00530   313•            IF(IREC.GT.1)ANC=2 + SAMSTR + SVO - 1                    TAPE2090
00532   314•            IF (FETVEC(I).GE.FC.AND.FETVEC(I).LE.LC) GO TO 150       TAPE2100
00534   315•            IF (FETVEC(I).GT.LC.AND.IREC.LT.NRPDS) GO TO 160         TAPE2110
00536   316•            WRITE (6,380)FETVEC(I)                                   TAPE2120
00541   317•            CALL CMERR                                               TAPE2130
00542   318•          150 IBYTE(I)=(FETVEC(I)-FC)*NS + ANC                       TAPE2140
00543   319•            JREC(I)=MOD(IREC,10)
00544   320•            IF(JREC(I).EQ.0)JREC(I)=10
00546   321•            LBUF(I)=IREC/10 + 1
00547   322•            IF(MOD(IREC,10).EQ.0)LBUF(I)=LBUF(I)-1
00551   323•            GO TO 180                                                TAPE2160
00552   324•          160 FC=LC+1                                                TAPE2170
00553   325•            LC=LC+NCPR                                               TAPE2180
00554   326•          170 CONTINUE                                               TAPE2190
00556   327•          180 K=IREC                                                 TAPE2200
00557   328•          190 CONTINUE                                               TAPE2210
00557   329•      C•                                                             TAPE2220
00557   330•      C•    NSAMP = NO. OF SAMPLES TO UNPACK FOR EACH FEATURE IN FETVEC  TAPE2230
00557   331•      C•                                                             TAPE2240
00561   332•            NSAMP = (SAMEND - SAMSTR) / SAMINC + 1
00562   333•            RETURN                                                   TAPE2260
00562   334•      C•                                                             TAPE2270
00562   335•      C•                                                             TAPE2280
00562   336•      C•    ENTRY FOR READING AND UNPACKING ONE SCAN LINE OF DATA    TAPE2290
00562   337•      C•                                                             TAPE2300
00563   338•            ENTRY LINERD(IDATA,END,TAP)
```

```
00565          DIMENSION IDATA(1)                                          TAPE2320
00566          IF (READY) GO TO 200                                        TAPE2330
00570          WRITE (6,410)                                               TAPE2340
00570    C*                                                                TAPE2350
00572      200 IADR=1                                                      TAPE2360
00573      195 IF(IST(1).EQ.-1)GO TO 195
00575          IF(FORMAT .EQ.1)SCAN=FLD(20,16,IBUF(16))
00577          IF(FORMAT .EQ.2)SCAN=FLD(0,16,IBUF(1))
00577    C
00601          IF ( FORMAT .EQ. 3 )   SCAN = FSCAN
00603          IF(SCAN.EQ.FSCAN)GO TO 196
00605          IF (IST(1) .LT. 0)  GO TO 250
00605    C*
00607          CALL SEARCH($250,$235)
00610          REC=0
00611          BUF=1
00612          CALL BUFILL(REC)
00613          GO TO 195
00614      196 CONTINUE
00615          ADD = (NSCAN-FSCAN)*DSL                                     TAPE2370
00616          STOBIT = (36 - NBITS) + 1
00617          SKPBIT = STOBIT - 1
00620          INCBIT = IABS( (SAMINC - 1) * NBITS)
00621          DO 230 IFT=1,NOFEAT                                         TAPE2380
00624      201 IF(LBUF(IFT).EQ.BUF)GO TO 205
00626          CALL NTRAN(IUNIT,22)
00627          CALL BUFILL(REC)
00630          BUF=BUF+1
00631          GO TO 201
00632      205 CONTINUE
00633          J=JREC(IFT)                                                 TAPE2390
00634          JJ=(J-1)*MAXREC + 1                                         TAPE2400
00634    C*                                                                TAPE2410
00634    C*    CHECK STATUS OF THIS RECORD BEFORE UNPACKING                TAPE2420
00634    C*                                                                TAPE2430
00635      210 IF (IST(J).GE.0) GO TO 220                                  TAPE2440
00637          IF(IST(J).GE.-1)GO TO 210
00641          IF(IST(J).EQ.-2)GO TO 250
00643          WRITE (6,290)                                               TAPE2470
00645          WRITE (6,310)NSCAN,IST(J)                                   TAPE2480
00651          WRITE(6,340)
00653          GO TO 250                                                   TAPE2500
00653    C*                                                                TAPE2510
00653    C*    UNPACK DATA FOR THIS FEATURE                                TAPE2520
00653    C*                                                                TAPE2530
00654      220 IP = ADD + IBYTE(IFT) - 1
00655          IBIT = MOD( (IP*NBITS), 36) + 1
00656          BEGWRD = (IP*NBITS) / 36 + JJ
00657          CALL SYTRAN(IBIT,IBUF(BEGWRD),INCBIT,NSAMP,NBITS,STOBIT,IDATA(IADR
00657         *),SKPBIT)
00660          IADR=IADR+NSAMP                                             TAPE2560
00661      230 CONTINUE                                                    TAPE2570
00661    C*    FINISHED UNPACKING ONE SCAN LINE OF DATA                    TAPE2580
00663          IF ((NSCAN+LININC).GT.LINEND) GO TO 260                     TAPE2590
00663    C*
00663    C*    MAKE SURE ALL BUFFERS FOR THIS DATA SET HAVE BEEN READ
00663    C*
00665      231 IF(BUF.EQ.NBUFS)GO TO 235
```


101

```
00667     397.          CALL BUFILL(REC)
00670     396.          BUF=BUF+1
00671     399.          CALL NTRAN(IUNIT,22)
00672     400.          GO TO 231
00673     401.        235 CONTINUE
00674     402.          NSCAN=NSCAN+LININC                                          TAPE2600
00675     403.          IF(NSCAN.LT.(FSCAN+NDSPR))RETURN                            TAPE2610
00677     404.          FSCAN=FSCAN + NDSPR*(1 + LINC/NRPDS)                        TAPE2620
00700     405.          CALL NTRAN(IUNIT,7,LINC)                                    TAPE2630
00701     406.          IF (NSCAN.LT.(FSCAN+NDSPR)) GO TO 240                       TAPE2640
00703     407.          CALL NTRAN(IUNIT,7,1)                                       TAPE2650
00704     408.          FSCAN=FSCAN+NDSPR                                           TAPE2660
00705     409.        240 CONTINUE                                                  TAPE2670
00705     410.    C.                                                                TAPE2680
00705     411.    C.      INITIATE READ FOR NEXT SCAN                               TAPE2690
00705     412.    C.                                                                TAPE2700
00706     413.          REC=0
00707     414.          BUF=1
00710     415.          CALL BUFILL(REC)
00711     416.          RETURN                                                      TAPE2720
00711     417.    C.                                                                TAPE2730
00711     418.    C.    END OF DATA                                                 TAPE2740
00711     419.    C.                                                                TAPE2750
00712     420.        250 IF(NSCAN.GT.LINSTR)NSCAN=NSCAN-LININC                     TAPE2760
00714     421.          BLOCK(2)=NSCAN                                              TAPE2770
00715     422.          WRITE (6,320)NSCAN                                          TAPE2780
00720     423.          IF (FILEND .EQ. 0)  GO TO 255
00720     424.    C.
00720     425.    C.    BACK SPACE 1 FILE AND POSITION AT FIRST SCAN LINE
00720     426.    C.
00722     427.          CALL NTRAN(IUNIT,22,8,-1)
00723     428.          CALL NTRAN(IUNIT,22,8,1)
00724     429.          CALL NTRAN(IUNIT,7,1)
00725     430.          GO TO 257
00726     431.        255 CONTINUE
00726     432.    C.                                                                TAPE2790
00726     433.    C.    REWIND TAPE AND POSITION AT FIRST SCAN LINE                 TAPE2800
00726     434.    C.                                                                TAPE2810
00727     435.          CALL NTRAN(IUNIT,22,10,22)                                  TAPE2820
00730     436.          CALL NTRAN(IUNIT,7,1)                                       TAPE2830
00731     437.        257 FSCAN = IFRST
00732     438.          ENDTAP = -1
00733     439.          REC=0
00734     440.          BUF=1
00735     441.          CALL BUFILL(REC)
00736     442.        260 READY=.FALSE.                                             TAPE2860
00737     443.          RETURN                                                      TAPE2870
00740     444.        265 WRITE(6,340)
00742     445.          WRITE(6,420) ISTAT
00745     446.          CALL CMERR
00746     447.        270 FORMAT(' END-OF-FILE ENCOUNTERED ON HEADER RECORD')       TAPE2880
00747     448.        280 FORMAT(' UNRECOVERABLE ERROR READING HEADER RECORD')      TAPE2890
00750     449.        290 FORMAT(' ERROR WHILE READING DATA RECORD')                TAPE2900
00751     450.        300 FORMAT(' A LINE NO. IS LESS THAN OR EQUAL ZERO')          TAPE2910
00752     451.        310 FORMAT(' LAST SCAN LINE READ',I5,' ISTAT=',I5)            TAPE2920
00753     452.        320 FORMAT(' FIELD BOUNDARY FOR THIS FIELD DEFINED BEYOND SCOPE  OF DATAPE2930
00753     453.           'TA'/' THIS FLIGHT LINE CONTAINS',I6,' SCAN LINES')        TAPE2940
00754     454.        330 FORMAT('/' INTERNAL DIMENSIONS TOO SMALL FOR DATA'/' NO. OF CHANNELTAPE2950
```

```
00754    455•          •5 ON DATA TAPE=',I7,' NO. OF POINTS/CHANNEL=',I7/)                    TAPE2960
00755    456•        340 FORMAT(' CHECK THE FOLLOWING POSSIBLE ERRORS'/' 1. DATA TAPE IS NO
00755    457•          •T IN UNIVERSAL OR LARSYS FORMAT'/
00755    458•          •' 2. IF DATA TAPE IS 9-TRACK, THE -ASG- CARD SHOULD HAVE AN -N- OPTAPE3000
00755    459•          •TION'/4X,'AND A MESSAGE TO OPERATOR SHOULD BE ON 588 FORM'/          TAPE3010
00755    460•          •' 3. IF THE DATA TAPE WAS GENERATED ON A MACHINE OTHER THAN THE IITAPE3020
00755    461•          •08'/4X,'THE -ASG- CARD SHOULD HAVE AN -A- OPTION')                  TAPE3030
00756    462•        350 FORMAT(' ERROR READING FIRST DATA RECORD--ISTAT=',I3)              TAPE3040
00757    463•        360 FORMAT(' ONLY ONE OR LESS RECORDS PER CHANNEL ACCEPTABLE AT THIS TTAPE3050
00757    464•          •IME')                                                               TAPE3060
00760    465•        370 FORMAT(' NO. OF RECORDS PER DATA SET=',I5,' MUST BE LESS THAN OR ETAPE3070
00760    466•          •QUAL 15')                                                           TAPE3080
00761    467•        380 FORMAT(' FEATURE NUMBERS' I5,' AND ABOVE ARE NOT ON DATA TAPE'/    TAPE3090
00761    468•          •)                                                                   TAPE3100
00762    469•        390 FORMAT(' NO. OF BITS/PIXEL=',I5,' ONLY 8 BITS ACCEPTABLE AT THIS TTAPE3110
00762    470•          •IME')                                                               TAPE3120
00763    471•        400 FORMAT(' DATA ORDER INDICATOR=',I5/' DATA MUST BE ORDERED BY PIXELTAPE3130
00763    472•          •')                                                                  TAPE3140
00764    473•        410 FORMAT(' FLOINT MUST BE CALLED TO INITIALIZE PARAMETERS FOR A NE• TAPE3150
00764    474•          •FIELD')                                                             TAPE3160
00765    475•        420 FORMAT('  LENGTH OF HEADER RECORD IS', I5)
00766    476•        430 FORMAT(' FIRST SCAN ON THIS TAPE IS NUMBERED',I6,' FIELD DEFINITIO
00766    477•          •N IN ERROR')
00767    478•        440 FORMAT(' NUMBER OF SAMPLES OF PER SCAN ON THIS TAPE IS',I6,' FIELD
00767    479•          • DEFINITION IN ERROR')
00770    480•        470 FORMAT(' THIS TAPE CONTAINS ONLY',I6,' CHANNELS')
00771    481•        481  FORMAT(1H   '  INPUT IMAGE DATA TAPE INFORMATION:'  //
00771    482•          •    5X,'FORMAT', T30,2A6 /
00771    483•          •    5X,'NO. OF CHANNELS',T30,I4 /
00771    484•          •    5X,'NO. OF PIXELS/LINE',T30,I4)
00772    485•         500  FORMAT(// 5X, 'FIRST SCAN LINE NO.' , T30 , I4 ,
00772    486•          •  5X,'FIRST PIXEL REFERENCE PT.', T67, I4 )
00772    487•        C•                                                                     TAPE3170
00772    488•        C•     INTERNAL ROUTINE TO INITIATE READS FOR ONE SCAN LINE)           TAPE3180
00773    489•               SUBROUTINE BUFILL(IRN)
00776    490•               CALL NTRAN(IUNIT,22)                                           TAPE3200
00777    491•               K=1                                                            TAPE3210
01000    492•               DO 310 I=1,10
01003    493•               CALL NTRAN(IUNIT,2,MAXREC,IBUF(K),IST(I))                      TAPE3230
01004    494•               IRN=IRN+1
01005    495•               IF(IRN.GE.NRPDS)RETURN
01007    496•               K=K+MAXREC                                                     TAPE3240
01010    497•           310 CONTINUE                                                       TAPE3250
01012    498•               RETURN                                                         TAPE3260
01012    499•        C•
01012    500•        C•     INTERNAL ROUTINE TO SEARCH FOR CORRECT SCAN LINE
01012    501•        C•
01013    502•               SUBROUTINE SEARCH(S,$)
01016    503•               WRITE(6,600)FSCAN
01021    504•           600 FORMAT(' SEARCHING FOR LINE',I5)
01022    505•               WRITE(6,610)NRPDS,NDSPR
01026    506•           610 FORMAT(' RECORDS PER SCAN',I5,'  SCANS PER RECORD',I5)
01027    507•               IBACK=-5
01030    508•               IF(NRPDS.GT.5)IBACK=-NRPDS
01032    509•               IF(FSCAN.LE.5)IBACK=-NRPDS
01034    510•               CALL NTRAN(IUNIT,7,IBACK)
01035    511•               ITRY=1
01036    512•             5 CALL NTRAN(IUNIT,2,MAXREC,IBUF,ISTAT,22)
```


103

ORIGINAL PAGE
OF POOR QUALITY

```
01037          IF(ISTAT.EQ.-2)RETURN 1
01041          IF(FORMAT.EQ.1)SCAN=FLD(20,16,IBUF(16))
01043          IF(FORMAT.EQ.2)SCAN=FLD(0,16,IBUF(1))
01045          WRITE(6,650)SCAN,ISTAT
01051      650 FORMAT(' SCAN NO',I5,3X,'ISTAT=',I3)
01052          IF(SCAN.EQ.FSCAN)GO TO 10
01054          IF(SCAN.EQ.FSCAN+NDSPR)GO TO 30
01056          IF(ITRY.EQ.10)GO TO 20
01060        6 CONTINUE
01061          ITRY=ITRY+1
01062          GO TO 5
01063       10 WRITE(6,700)ITRY
01066      700 FORMAT(' FOUND IT AFTER',I3,' TRIES'/)
01067          CALL NTRAN(IUNIT,7,-1)
01070          RETURN
01071       20 IF(ITRY.LT.2*NRPDS)GO TO 6
01073          WRITE(6,800)ITRY
01076      800 FORMAT(' FAILED AFTER',I5,' TRIES--ABORTING')
01077          CALL CMERR
01100       30 CONTINUE
01101          WRITE(6,900)FSCAN
01104      900 FORMAT(' SCAN',I5,' IS MISSING--USING PREVIOUS SCAN INSTEAD')
01105          IBACK=-1
01106          CALL NTRAN(IUNIT,7,IBACK)
01107          RETURN 2
01110          END                                                          TAPE3270

    END OF COMPILATION:        NO  DIAGNOSTICS.
TAPERD          SYMBOLIC                          21 OCT 76  17:11:16   0  01547[illegible]4    14   53[illegible]  (DELETED)
TAPERD  CODE    RELOCATABLE                       21 OCT 76  17:11:16   1  01565620    36     1  (DELETED)
                                                                        0  01565664    14   169
```

104

```
@  FOR,*   UNPACK,UNPACK                                                                  26 OCT 76          18:50:39.156
UNIVAC 1108 FORTRAN V EXEC II LEVEL 25A  -(EXEC8 LEVEL E12010010A)
THIS COMPILATION WAS DONE ON 26 OCT 76 AT 18:50:39

   SUBROUTINE UNPAK1     ENTRY POINT 000202
              UNPACK     ENTRY POINT 000207

   STORAGE USED: CODE(1) 000232; DATA(0) 000044; BLANK COMMON(2) 000000

   EXTERNAL REFERENCES (BLOCK, NAME)

    0003    NWDU$
    0004    NIO2$
    0005    NERR3$

   STORAGE ASSIGNMENT  (BLOCK, TYPE, RELATIVE LOCATION, NAME)

    0001    000061 10L       0001    000124 20L       0001    000152 30L       0001    000155 40L       0000    000011 50F
    0000 I  000010 I         0000    000032 INJPS     0000 I  000000 JBIT      0000 I  000005 JMAX      0000 I  000001 KBIT
    0000 I  000002 KWRD      0000 I  000003 KWRD1     0000 I  000007 L         0000 I  000004 NAV       0000 I  000006 NOV


00101          SUBROUTINE UNPAK1 (IDAT)                                                  UNPC0000
00101    C                                                                               UNPC0010
00101    C     THIS ROUTINE UNPACKS UP TO 32-BIT IBM 360 WORDS INTO                      UNPC0020
00101    C     36-BIT WORD IMAGES WHICH CAN BE READ BY THE UNIVAC 1108.                  UNPC0030
00101    C                                                                               UNPC0040
00103          DIMENSION IDAT(1)                                                         UNPC0050
00103    C                                                                               UNPC0060
00103    C     INITIALIZE IDAT ARRAY                                                     UNPC0070
00103    C                                                                               UNPC0080
00104          JBIT = 0                                                                  UNPC0090
00105          KBIT = -1                                                                 UNPC0100
00106          KWRD = 0                                                                  UNPC0110
00107          KWRD1 = 0                                                                 UNPC0120
00110          NAV = 36                                                                  UNPC0130
00111          RETURN                                                                    UNPC0140
00111    C                                                                               UNPC0150
00112          ENTRY UNPACK (NTRE, NBITS)                                                UNPC0160
00112    C                                                                               UNPC0170
00112    C     UNPACK NEXT NBITS FROM IREC ARRAY INTO NTRE                               UNPC0180
00112    C                                                                               UNPC0190
00114          IF (NBITS.GT.32) GO TO 40                                                 UNPC0200
00116          IF (NBITS.LE.0) GO TO 30                                                  UNPC0210
00116    C                                                                               UNPC0220
00120          KBIT = KBIT + NBITS                                                       UNPC0230
00121          KWRD = KBIT / 36                                                          UNPC0240
00122          IF (NAV.LT.NBITS) GO TO 10                                                UNPC0250
00124          NTRE = FLD(JBIT,NBITS,IDAT(KWRD+1))                                       UNPC0260
00125          JBIT = JBIT + NBITS                                                       UNPC0270
00126          NAV = NAV - NBITS                                                         UNPC0280
00127          KWRD1 = KWRD                                                              UNPC0290
```

```
00130          RETURN                                                          UNPC0300
00130    C                                                                     UNPC0310
00131       10 JMAX = (KWRD1 + 1) * 36 - 1                                     UNPC0320
00132          NOV = KBIT - JMAX                                               UNPC0330
00133          L = 36 - NBITS                                                  UNPC0340
00134          IF (NAV.LE.0) GO TO 20                                          UNPC0350
00136          I = 36 - NAV                                                    UNPC0360
00137          FLD(L,NAV,NTRE) = FLD(I,NAV,IDAT(KWRD))                         UNPC0370
00140          L = L + NAV                                                     UNPC0380
00140    C                                                                     UNPC0390
00141       20 FLD(L,NOV,NTRE) = FLD(ABS(0),NOV,IDAT(KWRD+1))                  UNPC0400
00142          JBIT = NOV                                                      UNPC0410
00143          KWRD1 = KWRD                                                    UNPC0420
00144          NAV = 36 - NOV                                                  UNPC0430
00144    C                                                                     UNPC0440
00145       30 RETURN                                                          UNPC0450
00145    C                                                                     UNPC0460
00146       40 WRITE (6,50)NBITS                                               UNPC0470
00151       50 FORMAT(///// 5X,'***** ERROR FROM SUBR. UNPAK1 ---',I5,3X,'BITS EX
00151         1CEEDS 32-BIT WORD LENGTH' //// )
00152          GO TO 30                                                        UNPC0490
00153          END                                                             UNPC0500

    END OF COMPILATION:        NO  DIAGNOSTICS.
  UNPACK          SYMBOLIC                          21 OCT 76  17:11:17   0  01572362    14    52  (DELETED)
  UNPACK   CODE   RELOCATABLE                       21 OCT 76  17:11:17   1  01573712    24     7  (DELETED)
                                                                          0  01573742    14    18
```

166

```
@ FOR,*   IDHDR,IDHDR                                                                    26 OCT 76          18:50:40*51
UNIVAC 1108 FORTRAN V EXEC II LEVEL 25A  -(EXEC8 LEVEL E12010010A)
THIS COMPILATION WAS DONE ON 26 OCT 76 AT 18:50:40

   SUBROUTINE IDHEAD    ENTRY POINT 000726

   STORAGE USED: CODE(1) 000743; DATA(0) 003165; BLANK COMMON(2) 000000

    COMMON BLOCKS:

    0003   HDATA  000026

   EXTERNAL REFERENCES (BLOCK, NAME)

    0004   UNPK8
    0005   COVER
    0006   NPRT$
    0007   NI01$
    0010   NI02$
    0011   NERR3$

   STORAGE ASSIGNMENT  (BLOCK, TYPE, RELATIVE LOCATION, NAME)

    0000   002560 100F      0000   002567 105F      0000   002605 115F      0001   000025 115G      0000   002625 120F
    0000   002710 125F      0000   002717 130F      0000   002775 135F      0000   003004 140F      0001   000057 142G
    0000   003013 150F      0001   000070 151G      0000   003047 155F      0000   003063 160F      0000   003077 165F
    0000   003113 170F      0001   000167 206G      0001   000260 236G      0001   000335 261G      0000   002470 60F
    0000   002505 65F       0000   002513 70F       0000   002522 75F       0000   002531 80F       0000   002540 85F
    0000   002551 95F       0003 R 000006 A1        0003 R 000002 B0        0000 I 000001 EBCDIC    0000 I 001233 HEADER
    0000 R 002466 HEAD1     0003 R 002467 HEAD2     0000 I 002465 I         0003 I 000013 IDERTS    0003 I 000021 IEW
    0000   003150 INJPS     0003 I 000012 ISITE     0003 I 000022 LATDEG    0003 I 000023 LATMIN    0003 I 000024 LONDEG
    0003 I 000025 LONMIN    0003 I 000000 MASK      0003 I 000014 MISDAY    0003 I 000015 MISHR     0003 I 000016 MISMIN
    0003 I 000017 MISSEC    0003 I 000020 NORSOU    0003 I 000001 SUNAZ     0003 I 000000 SUNEL

00101          SUBROUTINE  IDHEAD(HEADAB)
00103          PARAMETER  MCH = 4
00104          DATA MASK/077777/
00106          COMMON /HDATA/ SUNEL, SUNAZ, B0(MCH), A1(MCH), ISITE, IDERTS,
00106         1              MISDAY, MISHR, MISMIN, MISSEC, NORSOU, IEW, LATDEG,
00106         2              LATMIN, LONDEG, LONMIN
00107          INTEGER  HEADAB(6800), EBCDIC(666), HEADER(666), SUNEL, SUNAZ
00107     C
00110       50 CALL UNPK8(HEADAB,EBCDIC,68,1)
00111          CALL UNPK8(HEADAB,HEADER,68,1)
00112          CALL COVER(EBCDIC,68)
00113          PRINT 60,(EBCDIC(I),I=1,32)
00113     C
00121       60 FORMAT( /  20X, 'HEADER :' / 20X,  '------'    // 20X,
00121     C
00121         1 'COMPUTING SYSTEM  ID' , 10X, 32R1 )
00121     C
```


167

```
00122     18•          PRINT 65,EBCDIC(34)
00125     19•       65 FORMAT(    20X,'LAST DIGIT OF YEAR ',10X,I1)
00128     20•          PRINT 70,EBCDIC(35),EBCDIC(36),EBCDIC(37)
00133     21•       70 FORMAT(    20X,'DAY NUMBER OF YEAR ',10X,3I1)
00133     22•     C
00134     23•          PRINT 75,EBCDIC(38)
00137     24•       75 FORMAT(    20X,'DAILY TAPE SERIAL NO.', 8X,I3)
00137     25•     C
00140     26•          PRINT 80,(EBCDIC(I),I=53,60)
00146     27•       80 FORMAT(    20X,'    SENSOR ID      ',10X,8R1)
00146     28•     C
00147     29•          PRINT 85,(HEADER(I),I=61,63)
00155     30•       85 FORMAT(    20X,'      DATE         ',10X,I2,'/',I2,'/',I2)
00155     31•     C
00155     32•     C
00156     33•          FLD(20,8,HEADER(66))=FLD(28,8,HEADER(65))
00157     34•          PRINT 95,           HEADER(66)
00162     35•       95 FORMAT(    20X,'ERTS MISSION NUMBER ',10X,I13)
00162     36•     C
00163     37•          FLD(20,8,HEADER(68))=FLD(28,8,HEADER(67))
00164     38•          PRINT 100,HEADER(68)
00167     39•      100 FORMAT(    20X,'SITE - SAMPLE SEG. NO.',10X,I14)
00167     40•     C
00170     41•          ISITE = HEADER(68)
00171     42•          CALL UNPK8(HEADAB,EBCDIC,60,2110)
00172     43•          CALL UNPK8(HEADAB,HEADER,60,2110)
00173     44•          CALL COVER(EBCDIC,60)
00173     45•     C
00174     46•          PRINT 105,HEADER(1)
00177     47•      105 FORMAT(    20X,'CLOUD COVER',I2,' PERCENT OF 10X11 NM SEARCH AREA
00177     48•         .COVERED BY CLOUDS')
00177     49•     C
00177     50•     C
00200     51•          PRINT 115,HEADER(13)
00203     52•      115 FORMAT(    20X,'FLAG INDICATING WHETHER A REFERENCE SCENE HAS BEEN
00203     53•         . USED FOR REGISTRATION----FLAG=',I1)
00203     54•     C
00204     55•          PRINT 123,(EBCDIC(I),I=14,22)
00212     56•      120 FORMAT(    20X,'(RTS SCENE/FRAME ID NUMBER FOR NEW DATA)',/,21X,
00212     57•         • I1,'  =ERTS MISSION NUMBER',/,21X,
00212     58•         •3I1 ,'= DAY NUMBER RELATIVE TO LAUNCH AT TIME OF OBSERVATION',/,
00212     59•         •21X,2I1,' = HOUR AT TIME OF OBSERVATION',/,21X,
00212     60•         •2I1,' =MINUTE AT TIME OF OBSERVATION',/,
00212     61•         •21X,I1,'  = TENS OF SECONDS AT TIME OF OBSERVATION')
00212     62•     C
00212     63•     C
00213     64•          IDERTS = EBCDIC(14)
00214     65•          MISDAY = 100 * EBCDIC(15) + 10 * EBCDIC(16) + EBCDIC(17)
00215     66•          MISHR = 10 * EBCDIC(18) + EBCDIC(19)
00216     67•          MISMIN = 10 * EBCDIC(20) + EBCDIC(21)
00217     68•          MISSEC = EBCDIC(22)
00217     69•     C
00220     70•          PRINT 125,HEADER(24)
00223     71•      125 FORMAT(    20X,'DATA QUALITY CLASSIFICATION=',I1)
00223     72•     C
00224     73•          IF(EBCDIC(25) .EQ.19)       EBCDIC(25)=6HNORTH
00226     74•          IF(EBCDIC(25) .EQ.24)       EBCDIC(25)=6HSOUTH
00230     75•          IF(EBCDIC(31) .EQ. 28)      EBCDIC(31)=6HWEST
```

80/

```
00232     76•           IF(EBCDIC(31) .EQ. 10)      EBCDIC(31)=6HEAST
00234     77•           PRINT 130,(EBCDIC(I),I=25,36)
00242     78•     130 FORMAT(    20X,'CENTER OF SAMPLE SEGMENT',//,21X,
00242     79•        •'LATITUDE (GEODETIC)  ',/ ,21X,12X,A6,/,21X,
00242     80•        •'DEGREES              = ',3I1,/,21X,
00242     81•        •'MINUTES              = ',2I1,//,21X,
00242     82•        •'LONGITUDE (GEODETIC)  ',/,21X,12X,A6,/,21X,
00242     83•        •'DEGREES              = ',3I1,/,21X,
00242     84•        •'MINUTES              = ',2I1)
00242     85•     C
00243     86•           NORSOU = EBCDIC(25)
00244     87•           IEW = EBCDIC(31)
00245     88•           LATDEG = 100 • EBCDIC(26) + 10 • EBCDIC(27) + EBCDIC(28)
00246     89•           LATMIN = 10 • EBCDIC(29) + EBCDIC(30)
00247     90•           LONDEG = 100 • EBCDIC(32) + 10 • EBCDIC(33) + EBCDIC(34)
00250     91•           LONMIN = 10 • EBCDIC(35) + EBCDIC(36)
00250     92•     C
00251     93•           PRINT 135,EBCDIC(54),EBCDIC(55)
00255     94•     135 FORMAT(    20X,'SUN ELEVATION  (DEGREES) ',2I1)
00255     95•     C
00256     96•           SUNEL = 10 • EBCDIC(54) + EBCDIC(55)
00256     97•     C
00257     98•           PRINT 140,(EBCDIC(I),I=59,61)
00265     99•     140 FORMAT(    20X,'SUN AZIMUTH    (DEGREES) ',3I1)
00265    100•     C
00265    101•     C
00266    102•           SUNAZ = 100 • EBCDIC(59) + 10 • EBCDIC(60) + EBCDIC(61)
00266    103•     C
00267    104•           CALL UNPK8(HEADA8,HEADER,16,2643)
00267    105•     C
00270    106•           PRINT 150
00272    107•     150 FORMAT(    20X,'BIAS FACTORS AND SCALING FACTORS=SIGNED BINARY',/,
00272    108•        •21X,'FOUR BYTES PER CHANNEL,WHERE FIRST TWO BYTES=BIAS FACTOR.',/,
00272    109•        •21X,'SECOND TWO BYTES=SCALING FACTOR.')
00272    110•     C
00273    111•           FLD(20,8,HEADER(2))=FLD(24,8,HEADER(1))
00274    112•           FLD(20,8,HEADER(4))=FLD(24,8,HEADER(3))
00275    113•           IF(FLD(20,1,HEADER(2)) .EQ. 1)
00275    114•        •HEADER(2)=-(AND(MASK,HEADER(2)))
00277    115•           HEAD1=FLOAT(HEADER(2))/10.
00300    116•           IF(FLD(20,1,HEADER(4)) .EQ. 1)
00300    117•        •HEADER(4)=-(AND(MASK,HEADER(4)))
00302    118•           HEAD2=FLOAT(HEADER(4))/10.
00303    119•           PRINT 155,HEAD1,HEAD2
00307    120•     155 FORMAT(    20X,'CHANNEL 1 BIAS FACTOR=',F10.1,/,30X,
00307    121•        •'SCALING FACTOR=',F10.1)
00307    122•     C
00307    123•     C
00310    124•           B0(1) = HEAD1
00311    125•           A1(1) = HEAD2
00311    126•     C
00311    127•     C
00312    128•           FLD(20,8,HEADER(6))=FLD(24,8,HEADER(5))
00313    129•           FLD(20,8,HEADER(8))=FLD(24,8,HEADER(7))
00314    130•           IF(FLD(20,1,HEADER(6)) .EQ. 1)
00314    131•        •HEADER(6)=-(AND(MASK,HEADER(6)))
00316    132•           HEAD1=FLOAT(HEADER(6))/10.
00317    133•           IF(FLD(20,1,HEADER(8)) .EQ. 1)
```

601

```
00317     134*            *HEADER(8)=-(AND(MASK,HEADER(8)))
00321     135*             HEAD2=FLOAT(HEADER(8))/10.
00322     136*             PRINT 160,HEAD1,HEAD2
00326     137*          160 FORMAT(    20X,'CHANNEL 2 BIAS FACTOR=',F10.1,/,30X,
00326     138*            *'SCALING FACTOR=',F10.1)
00326     139*      C
00327     140*             BO(2) = HEAD1
00330     141*             AI(2) = HEAD2
00330     142*      C
00330     143*      C
00331     144*             FLD(20,8,HEADER(10))=FLD(28,8,HEADER(9))
00332     145*             FLD(20,8,HEADER(12))=FLD(28,8,HEADER(11))
00333     146*             IF(FLD(20,1,HEADER(10)) .EQ. 1)
00333     147*            *HEADER(10)=-(AND(MASK,HEADER(10)))
00335     148*             HEAD1=FLOAT(HEADER(10))/10.
00336     149*             IF(FLD(20,1,HEADER(12)) .EQ. 1)
00336     150*            *HEADER(12)=-(AND(MASK,HEADER(12)))
00340     151*             HEAD2=FLOAT(HEADER(12))/10.
00341     152*             PRINT 165,HEAD1,HEAD2
00345     153*          165 FORMAT(    20X,'CHANNEL 3 BIAS FACTOR=',F10.1,/,30X,
00345     154*            *'SCALING FACTOR=',F10.1)
00345     155*      C
00345     156*      C
00346     157*             BO(3) = HEAD1
00347     158*             AI(3) = HEAD2
00347     159*      C
00347     160*      C
00350     161*             FLD(20,8,HEADER(14))=FLD(28,8,HEADER(13))
00351     162*             FLD(20,8,HEADER(16))=FLD(28,8,HEADER(15))
00352     163*             IF(FLD(20,1,HEADER(14)) .EQ. 1)
00352     164*            *HEADER(14)=-(AND(MASK,HEADER(14)))
00354     165*             HEAD1=FLOAT(HEADER(14))/10.
00355     166*             IF(FLD(20,1,HEADER(16)) .EQ. 1)
00355     167*            *HEADER(16)=-(AND(MASK,HEADER(16)))
00357     168*             HEAD2=FLOAT(HEADER(16))/10.
00360     169*             PRINT 170,HEAD1,HEAD2
00364     170*          170 FORMAT(    20X,'CHANNEL 4 BIAS FACTOR=',F10.1,/,30X,
00364     171*            *'SCALING FACTOR=',F10.1)
00364     172*      C
00364     173*      C
00365     174*             BO(4) = HEAD1
00366     175*             AI(4) = HEAD2
00366     176*      C
00367     177*          250 CONTINUE
00370     178*             RETURN
00371     179*             END

   End of Compilation:        0  DIAGNOSTICS.
IO.DR          SYMBOLIC
IO.OBR   CODE  RELOCATABLE                    21 OCT 76  17:11:20   0  01574336   14   179  (DELETED)
                                              21 OCT 76  17:11:20   1  01601250   24     1  (DELETED)
                                                                    0  01601300   14    82
```

```
@  FOR,*   COVER,COVER                                                                    26 OCT 76          18:50:42.76
UNIVAC 1108 FORTRAN V EXEC II LEVEL 25A  -(EXEC8 LEVEL E12010010A)
THIS COMPILATION WAS DONE ON 26 OCT 76 AT 18:50:42

   SUBROUTINE COVER      ENTRY POINT 000071

   STORAGE USED: CODE(1) 000102; DATA(0) 000414; BLANK COMMON(2) 000000

   EXTERNAL REFERENCES (BLOCK, NAME)

    0003    NERR3$

   STORAGE ASSIGNMENT  (BLOCK, TYPE, RELATIVE LOCATION, NAME)

    0001    000055 100L       0001    000007 121G       0001    000043 50L       0001    000052 70L       0000 I 000000 BLANK
    0000 I 000400 I           0000 I 000001 IC          0000 I 000401 IH         0000    000402 INJP$


00100      1.      C           CONVERT EBCDIC TO FIELDATA
00100      2.      C
00101      3.            SUBROUTINE  COVER(FIELDA,NCHAR)
00103      4.            INTEGER FIELDA(666),BLANK
00104      5.            DIMENSION IC(255)
00105      6.            DATA (IC(I),I=193,201)/6,7,8,9,10,11,12,13,14/
00107      7.            DATA (IC(I),I=209,217)/15,16,17,18,19,20,21,22,23/
00111      8.            DATA (IC(I),I=226,233)/24,25,26,27,28,29,30,31/
00113      9.            DATA (IC(I),I=240,249)/0,1,2,3,4,5,6,7,8,9/
00115     10.            DATA IC(64)/5/
00117     11.            BLANK=5
00120     12.            DO 100 I=1,NCHAR
00123     13.            IH=FIELDA(I)
00124     14.            IF(IH .GT. 192 .AND. IH .LT. 250 .OR. IH .EQ. 64
00124     15.           .  .OR. IH .EQ. 0)GO TO 50
00126     16.            FIELDA(I)=BLANK
00127     17.            GO TO 100
00130     18.         50 CONTINUE
00131     19.            IF(IH)60,60,70
00134     20.         60 IF(IH .EQ. 0)FIELDA(I)=0
00136     21.            GO TO 100
00137     22.         70 FIELDA(I)=IC(IH)
00140     23.        100 CONTINUE
00142     24.            RETURN
00143     25.            END

      END OF COMPILATION:          NO  DIAGNOSTICS.
   COVER              SYMBOLIC                                  21 OCT 76  17:11:21   0  01603474    14    25  (DELETED)
   COVER    CODE      RELOCATABLE                               21 OCT 76  17:11:21   1  01604232    24     1  (DELETED)
                                                                                       0  01604262    14    11
```

```
@ FOR,*   UNPK8,UNPK8                                                                    26 OCT 76          18:50:43.78
UNIVAC 1108 FORTRAN V EXEC II LEVEL 25A  -(EXEC8 LEVEL E12010010A)
THIS COMPILATION WAS DONE ON 26 OCT 76 AT 18:50:43

   SUBROUTINE UNPK8      ENTRY POINT 000211

   STORAGE USED: CODE(1) 000221; DATA(0) 000016; BLANK COMMON(2) 000000

   EXTERNAL REFERENCES (BLOCK, NAME)

    0003    NERR2$
    0004    NERR3$

   STORAGE ASSIGNMENT  (BLOCK, TYPE, RELATIVE LOCATION, NAME)

    0001    000045 11L       0001    000054 12L       0001    000064 13L       0001    000074 14L       0001    000104 15L
    0001    000126 16L       0001    000136 17L       0001    000146 18L       0001    000156 19L       0000 I  000001 IC
    0000    000004 INJP$     0000 I  000002 J         0000 I  000000 K         0000 I  000003 NP


00101      1*              SUBROUTINE UNPK8(KI,KO,N,IS)
00103      2*              DIMENSION KI(1),KO(1)
00104      3*              K=IS-1
00105      4*              IC=(K*2)/9+1
00106      5*              J=IABS(MOD(K,9))+1
00107      6*              NP=2-J
00110      7*              GO TO (11,12,13,14,15,16,17,18,19),J
00111      8*       11     KO(NP  )=FLD( 0,8,KI(IC))
00112      9*       12     KO(NP+1)=FLD( 8,8,KI(IC))
00113     10*       13     KO(NP+2)=FLD(16,8,KI(IC))
00114     11*       14     KO(NP+3)=FLD(24,8,KI(IC))
00115     12*       15     IC=IC+1
00116     13*              KO(NP+4)=FLD( 0,4,KI(IC))
00117     14*              FLD(28,4,KO(NP+4))=FLD(32,4,KI(IC-1))
00120     15*       16     KO(NP+5)=FLD( 4,8,KI(IC))
00121     16*       17     KO(NP+6)=FLD(12,8,KI(IC))
00122     17*       18     KO(NP+7)=FLD(20,8,KI(IC))
00123     18*       19     KO(NP+8)=FLD(28,8,KI(IC))
00124     19*              IC=IC+1
00125     20*              NP=NP+9
00126     21*              IF(NP.LE.N) GO TO 11
00130     22*              RETURN
00131     23*              END

      END OF COMPILATION:        NO  DIAGNOSTICS.
   UNPK8            SYMBOLIC                                  21 OCT 76  17:11:22   0  01604514    14    23  (DELETED)
   UNPK8    CODE    RELOCATABLE                               21 OCT 76  17:11:22   1  01605216    24     1  (DELETED)
                                                                                      0  01605246    14    15
```

112

```
@ ASM,* BYTRAN,BYTRAN
ASSEMBLED BY UNIVAC 1108 EXEC II ASSEMBLER   2404 0098A                    26 OCT 76          18:50:44.94
THIS ASSEMBLY WAS DONE ON 26 OCT 76 AT 18:50:45
000001
000002
000003
000004
000005
000006
000007
000008
000009
000010
000011
000012
000013
000014
000015
000016
000017
000018
000019
000020
000021
000022
000023
000024
000025
000026
000027
000028
000029
000030
000031
000032
000033
000034
000035
000036
000037
000038
000039
000040
000041
000042
000043
000044
000045
000046
000047
000048
000049
000050
000051
000052
000053
000054
000055
```

```
*  CALL BYTRAN(SBIT1,SWORD1,SBSKP,NBYTES,BYTESZ,DBIT1,DWORD1,DBSKP)
*
*
*           SBIT1 = BIT NO. OF FIRST BIT,FIRST BYTE,FIRST
*                   SOURCE WORD( =1,2,3,...,36  LEFT-TO-RIGHT )
*
*           SWORD1 = FIRST SOURCE WORD ADDRESS
*
*           SBSKP = NO. OF BITS TO SKIP BETWEEN BYTES,IN SOURCE
*                   BYTE STRING
*
*                   IF = 0, BYTES ARE A CONTIGUOUS BYTE STRING
*
*           IF .GT. 0,STARTING WITH BYTE 1 LEFT JUSTIFIED TO SBIT1,
*                     NBYTES  BYTES ARE UNPACKED EVERY SBSKP BITS,
*                     WORD BOUNDARIES IGNORED IN UNPACKING SOURCE BYTE
*                     STRING
*
*           NBYTES = TOTAL NO. OF BYTES TO BE UNPACKED FROM SOURCE STRING
*           AND PACKED INTO DESTINATION STRING
*
*           BYTESZ = BYTE SIZE ( NO. OF BITS/BYTE )
*
*           DBIT1 = BIT NO. FOR FIRST BIT OF FIRST BYTE ,FIRST WORD OF
*           DESTINATION STRING   ( = 1,2,3,...,36  LEFT-TO-RIGHT )
*
*           DWORD1 = FIRST DESTINATION WORD ADDRESS
*
*           DBSKP = NO. BITS TO SKIP BETWEEN BYTES PACKED INTO DESTINATION
*                   BYTE STRING
*
*                   IF = 0, BYTES ARE PACKED IN A CONTIGUOUS BYTE STRING
*                           WITH FIRST BYTE LEFT-JUSTIFIED TO DBIT1 OF DWORD1
*
*                   IF .GT. 0, DBSKP BITS ARE SKIPPED OVER BETWEEN BYTES
*                              WHEN PACKING THE BYTES IN THE DESTINATION
*                              STRING
*
*           NBYTES AND BYTESZ ARE COMMON TO SOURCE AND DESTINATION BYTE
*           STRINGS. OTHER VARIABLES INDEPENDENT OF EACH OTHER.
*
*
*                       NOTE:  THIS VERSION OF BYTRAN TESTS FOR
*                       THE PACKING MODE TO BE RIGHT-JUSTIFICATION OF
*                       THE BYTE IN THE DESTINATION WORDS. IF
*                       RIGHT-JUSTIFY IS THE PACKING MODE,BYTRAN WILL
*                       ZERO THE DESTINATION WORD PRIOR TO PACKING .
*
*                       ALSO,ONLY ASCENDING WORD ADDRESSES ARE
*                       ALLOWED IN THE SOURCE STRING AND
*                       DESTINATION STRING .
*
*
*                       EXECUTION TIME =  .075 MILLISEC PER BYTE
```

113

```
000055
000057                                                  .
000058                                                  .
000059                                                  S(1)
000060          11    000000   74 06 03 00 0 000000              NBPR
000061                000001   06 01 13 00 0 000001   BYTRAN*    NOP     0,NAME
000062                000002   71 12 04 00 0 000002              SX,H2   X11,RETALD
000063                000003   01 00 0e 00 0 000004              DS      A4,RSAVE
000064                000004   06 00 01 00 0 000005              SA      A0,RSAVE+2
000065                000005   06 00 02 00 0 000006              SX      X1,RSAVE+3
000066                000006   04 00 01 00 0 000007              SX      X2,RSAVE+4
000067                000007   04 00 02 00 0 000010              SR      R1,RSAVE+5
000068                000010   12 00 04 13 1 000003              SR      R2,RSAVE+6
000069                000011   17 00 04 00 0 000012              LMA     A4,*3,X11
000070                000012   27 00 01 00 0 000020              ANM     A4,ONE
000071                000013   12 00 04 13 1 000004              LX      X1,A4
000072                000014   03 01 04 00 0 000060              LMA     A4,*4,X11
000073                000015   12 00 05 13 1 000002              SM,H2    A4=MSK
000074                000016   16 00 05 00 0 000020              LMA     A5,*2,X11
000075                000017   03 00 05 00 0 000022              AMA     A5,A4
000076                                                          S1      A5,ISKP
000077                                                  .
000078                000020   12 00 05 13 1 000007   CONT1      LMA     A5,*7,X11
000079                000021   16 00 05 00 0 000040              AMA     A5,A4
000080                000022   03 00 05 00 0 000023              SM      A5,OSKP
000081                000023   17 00 04 00 0 000013   CONT2      ANM     A4,THRTY6
000082                000024   01 00 04 00 0 000021              SA      A4,SIZM36
000083                000025   10 00 04 13 0 000001              L       A4,1,X11
000084                000026   17 00 04 00 0 000012              ANM     A4,ONE
000085                000027   31 00 04 00 0 000013              MSI     A4,THRTY6
000086                000030   12 00 06 13 1 000000              LMA     A6,*0,X11
000087                000031   17 00 0e 00 0 000012              ANM     A6,ONE
000088                000032   16 00 06 00 0 000020              AMA     A6,A4
000089                000033   03 00 0e 00 0 000014              SM      A6,CUMIN
000090                000034   10 00 04 13 0 000006              LA      A4,6,X11
000091                000035   17 00 04 00 0 000012              ANM     A4,ONE
000092                000036   31 00 04 00 0 000013              MSI     A4,THRTY6
000093                000037   12 00 11 13 1 000005              LMA     A9,*5,X11
000094                000040   17 00 11 00 0 000012              ANM     A9,ONE
000095                000041   12 00 05 00 0 000025              LM      A5,A9
000096                000042   16 00 11 00 0 000020              AMA     A9,A4
000097                000043   03 00 11 00 0 000015              SM      A9,CUMOUT
000098                000044   05 00 00 00 0 000020              SZ      RTJSFY
000099                000045   16 00 05 13 1 000004              AM      A5,*4,X11
000100                000046   52 00 05 00 0 000013              TE      A5,THRTY6
000101                000047   74 04 00 00 0 000057              J       S+8
000102                000050   05 00 00 00 0 000020              SZ      A4
000103                000051   12 00 05 00 0 000023              LM      A5,OSKP
000104                000052   34 00 04 00 0 000013              DI      A4,THRTY6
000105                000053   52 00 05 00 0 000011              TE      A5,ZERO
000106                000054   74 04 00 00 0 000057              J       S+3
000107                000055   10 00 05 00 0 000012              LA      A5,ONE
000108                000056   03 00 05 00 0 000020              SM      A5,RTJSFY
000109                000057   10 00 04 00 0 000017              LA      A4,MASK
000110                000060   73 12 04 00 0 000000   ISR        LSSL    A4,0
000111                000061   23 00 02 00 0 000020              LR      R2,A4
000112                000062   05 00 00 00 0 000021   NOJUST     SZ      A5
000113                000063   34 00 05 00 0 000013              DI      A5,THRTY6
```

• X1= LOOP COUNTER= NO. BYTES-1

• A4 = BYTE SIZE

• ••••

•••

• ••••

• ••••

• SIZM36 = BYTESZ - 36

• A4 = INITIAL SOURCE WORD ADDRESS

• SOURCE WORD ADDRESS = I

• CUMULATIVE BIT COUNT (SOURCE)

• A6 = BIT NO. OF FIRST BIT,FIRST BYTE (SOURCE)

• A6 = BIT I ADDRESS (SOURCE) (0-35)

• A6 = CUMIN = INITIAL CUMULATIVE BIT COUNT(SOURCE

• A4 = INITIAL DEST. WORD ADDRESS

• A4 = CUMULATIVE BIT COUNT (DEST.)

• A9 = BIT NO. OF FIRST BIT,FIRST BYTE (DEST.)

• A9 = BIT I ADDRESS (DEST.) (0-35)

• A9 = CUMOUT = INITIAL CUMULATIVE BIT COUNT (DEST

• A5 = DEST. BIT I ADDRESS + BYTE SIZE

• RIGHT-JUSTIFY FLAG SET

• INITIALIZE MASK REGISTER

```
000114  000064  14 00 05 00 0 000012          A     A5,ONE
000115  000065  03 00 05 00 0 000024          SM    A5,SWD       * A5 = SWD = CURRENT SOURCE WORD ADDRESS
000116  000066  05 00 00 00 0 000024          SZ    A8
000117  000067  34 00 10 00 0 000013          DI    A8,THRTY6
000118  000070  14 00 10 00 0 000012          A     A8,ONE
000119  000071  03 00 10 00 0 000025          SM    A8,DWD       * A8 = DWD = CURRENT DEST. WORD ADDRESS
000120  000072  50 00 00 00 0 000020          TZ    RTJSFY       *
000121  000073  05 00 03 00 1 000025          SZ    *DWD         * ZERO-FILL THE DESTINATION WORD
000122                                                           * IF THE RIGHT-JUSTIFY FLAG IS SET
000123  000074  31 00 05 00 0 000013          MSI   A5,THRTY6
000124  000075  17 00 05 00 0 000014          ANM   A5,CUMIN     * A5 = SOURCE WDI X 36 - CUMIN
000125  000076  10 00 04 00 0 000013          LA    A4,THRTY6
000126  000077  17 00 04 00 0 000021          ANM   A4,A5        * A4 = 36 - (WDI X 36 - CUMIN)
000127                                                           *    = BIT1 ADDRESS,CURRENT SOURCE WORD
000128  000100  14 00 04 00 0 000021          AA    A4,SIZM36    * A4 = (BIT1 + BYTESZ - 36 = SHIFT DIRECTION
000129                                                           * AND MAGNITUDE
000130  000101  03 00 04 00 0 000026          SM    A4,SHFCNT    * A4      = SOURCE WORD SHIFT COUNT (MAGNITUDE)
000131  000102  71 13 12 00 1 000024          DL    A10,*SWD     * A10,A11 = SOURCE WDI,WDI+1
000132  000103  51 00 00 00 0 000020          TNZ   A4
000133  000104  74 04 00 00 0 000112          J     $+6          * SHIFT COUNT = 0
000134  000105  60 00 00 00 0 000020          TP    A4
000135  000106  74 04 00 00 0 000111          J     $+3
000136  000107  73 13 12 00 1 000026  SHFT1   LDSL  A10,*SHFCNT   * SHIFT COUNT POSITIVE-RIGHT JUSTIFY THE
000137                                                           * SOURCE BYTE IN A10
000138  000110  74 04 00 00 0 000112          J     $+2
000139  000111  73 02 12 00 1 000026          SSL   A10,*SHFCNT   * SHIFT COUNT NEGATIVE- RIGHT JUSTIFY THE
000140                                                           * SOURCE BYTE IN A10
000141  000112  71 13 16 00 1 000025          DL    A14,*DWD     * A14,A15 = DESTINATION WDI,WDI+1
000142  000113  31 00 10 00 0 000013          MSI   A8,THRTY6
000143  000114  17 00 10 00 0 000015          ANM   A8,CUMOUT    * A8 = DESTINATION WDI X 36 - CUMOUT
000144  000115  10 00 05 00 0 000013          LA    A5,THRTY6
000145  000116  17 00 05 00 0 000024          ANM   A5,A8        * A5 = 36 - (WDIX36 - CUMOUT)
000146                                                           *    = BIT 1 ADDRESS IN DEST. WORD
000147  000117  14 00 05 00 0 000021          AA    A5,SIZM36    * A5 = OBIT1 + BYTESZ - 36
000148                                                           *    = SHIFT DIRECTION AND MAGNITUDE
000149  000120  03 00 05 00 0 000026          SM    A5,SHFCNT    * SHFCNT = DEST. WORD SHIFT (MAGNITUDE)
000150  000121  51 00 00 00 0 000021          TNZ   A5
000151  000122  74 04 00 00 0 000130          J     $+6
000152  000123  60 00 00 00 0 000021          TP    A5           * SHIFT COUNT NON-ZERO - TEST FOR POSITIVE COUNT
000153  000124  74 04 00 00 0 000127          J     $+3
000154  000125  73 11 16 00 1 000026  SHFT2   LDSC  A14,*SHFCNT   * SHIFT COUNT POSITIVE- RIGHT JUSTIFY THE
000155                                                           * DESTINATION BYTE POSITION IN A14
000156  000126  74 04 00 00 0 000130          J     $+2
000157  000127  73 01 16 00 1 000026          DSC   A14,*SHFCNT   * SHIFT COUNT NEGATIVE- RIGHT JUSTIFY THE
000158                                                           * DESTINATION BYTE POSITION IN A14
000159  000130  43 07 12 00 0 000032          MLU   A10,A14      * SOURCE WORD,WITH BYTE RIGHT-ADJUSTED,MASKED
000160                                                           * WITH DESTINATION WORD,BYTE POSITION
000161                                                           * RIGHT-ADJUSTED, RESULT IN  A11
000162  000131  10 00 16 00 0 000027          LA    A14,A11      * A14 RE-INITIALIZED WITH ADJUSTED DEST. WORD,
000163                                                           * INCLUDING PACKED BYTE
000164  000132  51 00 00 00 0 000021          TNZ   A5
000165  000133  74 04 00 00 0 000141          J     $+6
000166  000134  60 00 00 00 0 000021          TP    A5
000167  000135  74 04 00 00 0 000140          J     $+3
000168  000136  73 01 16 00 1 000026          DSC   A14,*SHFCNT   * SHIFT WAS POSITIVE- RESTORE DEST. WDI,WDI+1
000169                                                           * TO ORIGINAL BIT POSITIONS
000170  000137  74 04 04 00 0 000141          J     $+2
000171  000140  73 11 16 00 1 000026          LDSC  A14,*SHFCNT   * SHIFT WAS NEGATIVE- RESTORE DEST. WDI,WDI+1
```

```
000172                                                  .                                   TO ORIGINAL BIT POSITIONS
000173          000141  71 12 16 00 1 000025                    DS     A14,*DWD          . DESTINATION WD1,WD1+1 RETURNED,
000174                                                  .                                   WITH PACKED BYTE
000175          000142  12 00 06 00 0 000014                    LMA    A6,CUMIN
000176          000143  14 00 06 00 0 000022                    A      A6,ISKP
000177          000144  03 00 06 00 0 000014                    SM     A6,CUMIN          . CUMIN UPDATED FOR BYTE SIZE AND OFFSET
000178          000145  12 00 11 00 0 000015                    LMA    A9,CUMOUT
000179          000146  14 00 11 00 0 000023                    A      A9,OSKP
000180          000147  03 00 11 00 0 000015                    SM     A9,CUMOUT         . CUMOUT UPDATED FOR BYTE SIZE AND OFFSET
000181          000150  70 00 01 00 0 000062                    JGD    X1,NOWWD          . DECREMENT BYTE COUNT. GO GET NEXT SOURCE BYTE
000182          000151  71 13 04 00 0 000002                    DL     A4,RSAVE
000183          000152  10 00 06 00 0 000004                    LA     A6,RSAVE+2
000184          000153  27 00 01 00 0 000005                    LX     X1,RSAVE+3
000185          000154  27 00 02 00 0 000006                    LX     X2,RSAVE+4
000186          000155  23 00 01 00 0 000007                    LR     R1,RSAVE+5
000187          000156  23 00 02 00 0 000010                    LR     R2,RSAVE+6
000188          000157  27 00 13 00 0 000001                    LX     X11,RETADD
000189          000160  74 04 00 13 0 000011                    J      9,X11             . RETURN TO CALLING PROGRAM
000190                                                  $(0)
000191     00   000000  073631270623                   NAME     +      'BYTRAN'
000192          000001  000000000000                   RETADD   +      0
000193          000002                                 RSAVE    RES    7
000194          000011  000000000000                   ZERO     +      0
000195          000012  000000000001                   ONE      +      1
000196          000013  000000000044                   THRTY6   +      36
000197          000014  000000000000                   CUMIN    +      0
000198          000015  000000000000                   CUMOUT   +      0
000199          000016  000000000000                   BYTESZ   +      0
000200          000017  777777777777                   MASK     +      0777777777777
000201          000020  000000000000                   RTJSFY   +      0
000202          000021  000000000000                   SIZM36   +      0
000203          000022  000000000000                   ISKP     +      0
000204          000023  000000000000                   OSKP     +      0
000205          000024  000000000000                   SWD      +      0
000206          000025  000000000000                   DWD      +      0
000207          000026  000000000000                   SHFCNT   +      0
000208                                                          END
    BYTRAN          SYMBOLIC                                        21 OCT 7.   17:11:24   0  01605570    14    208  (DELETED)
    BYTRAN   CODE   RELOCATABLE                                     21 OCT 76   17:11:24   1  01613330    12      1  (DELETED)
                                                                                           0  01613344    14     14
```

```
@  ASM,*  TAPLAB,TAPLAB                                                                    26 OCT 76          18:50:47.597
ASSEMBLED BY UNIVAC 1108 EXEC II ASSEMBLER   2494 0008A
THIS ASSEMBLY WAS DONE ON 26 OCT 76 AT 18:50:47
000001                                                                                  .
000002                                                                                  .
000003                                                                                  .  FORTRAN  CALL :
000004                                                                                  .  CALL  TAPLAB ( ARG1 , ARG2 )
000005                                                                                  .
000006                                                                                  .  ARG1 = INPUT FORTRAN UNIT NUMBER ---
000007                                                                                  .  POSITIVE INTEGER WITHIN RANGES 1-4,
000008                                                                                  .  7-16, OR 18-29
000009                                                                                  .
000010                                                                                  .  ARG2 = OUTPUT OPERATIONAL LABEL ASSIGNED
000011                                                                                  .  TO THE FORTRAN UNIT NO. GIVEN IN ARG1
000012                                                                                  .
000013                                                                                  .  ON RETURN FROM TAPLAB, IF ARG2 IS SET
000014                                                                                  .  ALL ZERO'S THE UNIT GIVEN WAS UNASSIGNED
000015                                                                                  .  FOR THE RUN
000016                                                                                  .
000017                                                                                  .  IF ARG2 IS SET ALL X'S ( I.E. 'XXXXXX' ),
000018                                                                                  .  THE UNIT NO. GIVEN WAS OUTSIDE THE
000019                                                                                  .  LEGITIMATE RANGES
000020                                                                                  .
000021                                                                                  .
000022                                                                                  .
000023                                                  S(1)                            .
000024                                                                  NBPR            .
000025      01    000000  74 06 00 00 0 000003                         NOP     0.NAME  .
000026            000001  06 01 13 00 0 000000          TAPLAB*         SX,H2   X11,RETADD .
000027            000002  10 00 07 13 1 000000                         LA      A7,*0,X11 .  A7 = FORTRAN UNIT NUMBER ( INTEGER )
000028            000003  10 16 10 00 0 000000                         LA,U    A8,0    .
000029            000004  10 16 11 00 0 000004                         LA,U    A9,4    .
000030            000005  56 00 10 00 0 000023          CK14            TW      A8,A7   .  A7 GT 0 , LE 4 ?
000031            000006  74 04 00 00 0 000012                          J      CK717   .  EITHER A7 LT 0, OR A7 GE 5
000032            000007  14 16 07 00 0 000005                          A,U    A7,5    .  A7 GE 1, LE 4  ---  CONVERT TO 'A',....,'D'
000033            000010  01 10 07 00 0 000030                         SA,S6   A7,GETLAB+1
000034            000011  74 04 00 00 0 000027                         J       GETLAB  .  GO GET LABEL
000035            000012  10 16 10 00 0 000006          CK717           LA,U    A6,6    .
000036            000013  10 16 11 00 0 000020                         LA,U    A9,16   .
000037            000014  56 00 10 00 0 000023                         TW      A8,A7   .  A7 GT 6 , LE 16 ?
000038            000015  74 04 00 00 0 000021                         J       CK1829  .  EITHER A7 LE 6, OR A7 GE 17
000039            000016  14 16 07 00 0 000003                         A,U     A7,3    .  A7 GE 7,LE 16 --- CONVERT TO 'E',....,'N'
000040            000017  01 10 07 00 0 000030                         SA,S6   A7,GETLAB+2
000041            000020  74 04 00 00 0 000027                          J      GETLAB  .  GO GET LABEL
000042            000021  10 16 10 00 0 000021          CK1829          LA,U    A8,17   .
000043            000022  10 16 11 00 0 000035                         LA,U    A9,29   .
000044            000023  56 00 10 00 0 000023                         TW      A8,A7   .  A7 GT 17 AND LE 29 ?
000045            000024  74 04 00 00 0 000041                          J      ERUNIT  .  EITHER A7 LE 17, OR A7 GE 30
000046            000025  14 16 07 00 0 000002                          A,U    A7,2    .  A7 GE 18, LE 29 --- CONVERT TO 'O',....,'Z'
000047            000026  01 10 07 00 0 000030                         SA,S6   A7,S+2  .
000048 U          000027  74 13 13 00 0 000000          GETLAB          LMJ     X11,TLABLS .  RETRIEVE LABEL ASSIGNED TO UNIT DESIGNATED
000049                                                                                  .  IN A7
000050            000030  000000 000005                                 +       0.' '   .
000051            000031  27 00 13 00 0 000000                         LX      X11,RETADD .
000052            000032  01 00 00 13 1 000001                         SA      A0,*1,X11 .  STORE LABEL IN ARG2 OF CALLING SEQUENCE
000053            000033  73 02 00 00 0 000036                         SSL     A0,30   .
000054            000034  10 16 07 00 0 000004                         LA,U    A7,4    .
000055            000035  10 00 10 00 0 000002                         LA      A8,BLANK .
```

117

```
000056          000036  55 00 07 00 0 000014            TG      A7,A0       .  TEST FIRST POSITION OF LABEL
000057          000037  01 15 10 13 1 000001            SA,S1   A8,*1,X11   .  IF FIRST CHARACTER LESS THAN OCTAL 05,
000058                                                                      .  STORE A 'BLANK' IN 1'ST CHARACTER OF LABEL
000059          000040  74 04 00 13 0 000003  RETRN1     J      3,X11       .  RETURN TO CALLING PROGRAM
000060          000041  10 00 07 00 0 000001  ERUNIT    LA      A7,XLABEL   .
000061          000042  01 00 07 13 1 000001            SA      A7,*1,X11   .  ERRONEOUS UNIT NUMBER GIVEN
000062          000043  74 04 00 13 0 000003  RETRN2     J      3,X11       .  RETURN TO CALLING PROGRAM
000063                                        S(0)
000064     00   000000  000000000000          RETADD     +      0           .
000065          000001  353535353535          XLABEL     +      0353535353535  .
000066          000002  050505050505          BLANK      +      0050505050505  .
000067          000003  310625210607          NAME       +      'TAPLAB'    .
000068                                                  END
                                              TLABLS
    TAPLAB          SYMBOLIC                                  21 OCT 76  17:11:26   0  01613650    14    68  (DELETED)
    TAPLAB  CODE    RELOCATABLE                               21 OCT 76  17:11:26   1  01615540    12     1  (DELETED)
                                                                                    0  01615554    14     4
```


118

```
          STARTING ADDRESS  014000
          CORE LIMITS 014000 037205     100000 150125     163777 163777


PFCGAB/CODE
0    100000-114360
1    014000-020052

NSTOP$/RLEC5
1    020053-020064

NERR$ /RLEC4
0    114361-114550
1    020065-020527

SQRT  /RL24
0    114551-114554
1    020530-020567
2    114555-114562

NIER$ /RLEC5
0    114563-114563
1    020570-021075
2    114564-114660

NFMT$ /RLEC4
1    021076-022033
2    114661-114675

NFTV$ /RL22
1    022034-022056

NCNVT$/RLEC5
1    022057-022303
2    114676-114764

NOTIN$/RLEC5
1    022304-022753
2    114765-115033

FPACK$/CODE
1    022754-023017

DEPTH /******
```

APPENDIX C

PFCGAB SAMPLE OUTPUT

SAMPLE PFCGAB OUTPUT

FOR

ERIPS "MERGE" TAPE PROCESSING

SAMPLE OUTPUT : 16-CHANNEL "MERGE" TAPE

```
INPUT IMAGE DATA TAPE INFORMATION:

  FORMAT                    UNIVERSAL
  NO. OF CHANNELS             16
  NO. OF PIXELS/LINE         196

                HEADER :
                -------

                COMPUTING SYSTEM  ID          ERIPS
                LAST DIGIT OF YEAR            6
                DAY NUMBER OF YEAR            885
                DAILY TAPE SERIAL NO.           5
                   SENSOR ID                  ERTS MSS
                   DATE                       29/ 7/76
                ERTS MISSION NUMBER              2
                SITE - SAMPLE SEG. NO.           19.9
                CLOUD COVER 0 PERCENT OF 185X11 NM SEARCH AREA COVERED BY CLOUDS
                FLAG INDICATING WHETHER A REFERENCE SCENE HAS BEEN USED FOR REGISTRATION----FLAG=1
                (RTS SCENE/FRAME ID NUMBER FOR NEW DATA)
                 2  =ERTS MISSION NUMBER
                 211= DAY NUMBER RELATIVE TO LAUNCH AT TIME OF OBSERVATION
                 17 = HOUR AT TIME OF OBSERVATION
                 38 =MINUTE AT TIME OF OBSERVATION
                 5  = TENS OF SECONDS AT TIME OF OBSERVATION
                DATA QUALITY CLASSIFICATION=1
                CENTER OF SAMPLE SEGMENT

                 LATITUDE (GEODETIC)
                        NORTH
                 DEGREES              = 048
                 MINUTES              = 53

                 LONGITUDE (GEODETIC)
                        WEST
                 DEGREES              = 111
                 MINUTES              = 47
                SUN ELEVATION  (DEGREES) 46
                SUN AZIMUTH    (DEGREES) 135
                BIAS FACTORS AND SCALING FACTORS-SIGNED BINARY
                 FOUR BYTES PER CHANNEL,WHERE FIRST TWO BYTES=BIAS FACTOR.
                 SECOND TWO BYTES=SCALING FACTOR.
                CHANNEL 1 BIAS FACTOR=        5.3
                          SCALING FACTOR=     -41.8
                CHANNEL 2 BIAS FACTOR=        3.8
                          SCALING FACTOR=     -96.6
                CHANNEL 3 BIAS FACTOR=        4.3
                          SCALING FACTOR=     -64.9
                CHANNEL 4 BIAS FACTOR=        9.1
                          SCALING FACTOR=   -3070.9

FIRST SCAN LINE NO.        1      FIRST PIXEL REFERENCE PT.       1

FROM PFCGAR:
------------
FILE NO.    1    , NO. SCAN LINES READ =    117    , FOR IMAGE NO.    1
```

FILE: 1 MERGE TAPE: 10008 IMAGE NO. 1 SUN ELEV= 0

5 X 6 AREA

FREQUENCY DISTRIBUTION

PIXEL VALUE	BAND 1 FREQ	BAND 1 %	BAND 2 FREQ	BAND 2 %	BAND 3 FREQ	BAND 3 %	BAND 4 FREQ	BAND 4 %
0							3	.0
1							20	.1
2							44	.2
3					3	.0	101	.4
4					8	.0	80	.3
5					8	.0	39	.2
6					16	.1	65	.3
7					12	.1	114	.5
8					6	.0	123	.5
9			3	.0	5	.0	49	.2
10			9	.0	6	.0	23	.1
11			16	.1	3	.0	34	.1
12	3	.0	14	.1	2	.0	36	.2
13			11	.0	1	.0	48	.2
14	19	.1	13	.1	5	.0	45	.2
15	14	.1	18	.1	6	.0	60	.3
16	9	.0	5	.0	4	.0	145	.6
17	4	.0	2	.0	11	.0	305	1.3
18	27	.1	2	.0	15	.1	811	3.5
19	12	.1	21	.1	6	.0	1568	6.8
20	14	.1	16	.1	2	.0	2875	12.5
21	23	.1	41	.2	22	.1	3493	15.2
22	19	.1	13	.1	14	.1	3681	16.1
23	24	.1	29	.1	22	.1	3577	15.6
24	36	.2	14	.1	11	.0	2132	9.3
25	29	.1	83	.4	52	.2	1910	8.3
26	122	.5	86	.4	39	.2	879	3.8
27	31	.1	116	.5	49	.2	405	1.8
28	125	.5	48	.2			167	.7
29	374	1.6	340	1.5	42	.2	67	.3
30	196	.9	387	1.7			22	.1
31	627	2.7	231	1.0	34	.1	7	.0
32	847	3.7	294	1.3	17	.1	2	.0
33	664	2.9	548	2.4	19	.1		
34	1531	6.7	359	1.6	28	.1	2	.0
35	887	3.9	204	.9	1	.0		
36	1119	4.9	714	3.1	32	.1		
37	1329	5.8	165	.7	46	.2		
38	1188	5.2	302	1.3	30	.1		

ORIGINAL PAGE IS OF POOR QUALITY

39	2303	10.3	555	2.4	106	.5
40	1475	6.4	153	.7	83	.4
41	792	3.5	1007	4.4	93	.4
42	2625	11.4	281	1.2	146	.6
43	1586	6.9	1279	5.6	492	2.1
44	849	3.7	673	2.9		
45	2067	9.0	1751	7.6	302	1.3
46	471	2.1	926	4.0	1459	6.4
47	438	1.9			291	1.3
48	440	1.9	1990	8.7	1305	5.7
49	227	1.0	1043	4.5	1104	4.8
50	156	.7	523	2.3	436	1.9
51			3033	13.2	1780	7.8
52	82	.4	1426	6.2	1798	7.8
53	72	.3	407	1.8	617	2.7
54	7	.0	924	4.0	1951	8.5
55	10	.0	163	.7	1388	6.1
56	33	.1	1129	4.9	1762	7.7
57	11	.0	466	2.0	1172	5.1
58	4	.0			1108	4.8
59	6	.0	447	1.9	990	4.3
60	3	.0	265	1.2	884	3.9
61			59	.3	924	4.0
62			123	.5	773	3.4
63			59	.3	406	1.8
64			3	.0	483	2.1
65			18	.1	51	.2
66			45	.2	154	.7
67					190	.8
68			16	.1	53	.2
69			10	.0		
70			4	.0	20	.1
71			30	.1	21	.1
72			2	.0		
73			15	.1	8	.0
74			1	.0	1	.0
75					2	.0
76			2	.0	1	.0
77					1	.0

FILE: 1 MERGE TAPE: 10008 IMAGE NO. 1 SUN ELEV= 0

STATISTICS

5 X 6 AREA

		BAND 1		BAND 2		BAND 3		BAND 4	
		5 X 6 AREA DATA	SUN ELEV CORR	5 X 6 AREA DATA	SUN ELEV CORR	5 X 6 AREA DATA	SUN ELEV CORR	5 X 6 AREA DATA	SUN ELEV CORR
MIN		12		9		3		0	
MAX		63		76		77		34	
RANGE		48		67		74		34	
MEAN	P2=	39.2		46.1		53.2		21.5	
STD DEVIATION	S2=	5.4		8.5		7.3		3.7	
MEAN DEVIATION		4.3		6.7		5.3		2.4	
MEDIAN		39		48		54		22	
MODE		42		51		54		22	

FILE: 1 MERGE TAPE: 10008 IMAGE NO. 1 SUN ELEV= 0

5 X 6 AREA

PERCENT EXCEEDING SELECTED VALUES

	BAND 1	BAND 2	BAND 3	BAND 4
% > 60	.0	2.8	17.3	.0
% > 90	.0	.0	.0	.0

126

FILE: 1 MERGE TAPE: 1000@ IMAGE NO. 1 SUN ELEV= 0

	AREA (10 X 11)	AREA (5 X 6)	TRUNCATED	TRUNCATED	MOD. STD DEV	AVERAGE	PERCENT
BAND 1	MIN= 12 MAX= 60	MIN= 4 MAX=120	MIN= 10 MAX= 80	MIN= 20 MAX= 60			
GAIN	A2= 7.8	A3= 7.8	A4= 7.8	A5= 8.1	A6= 11.8	A7= 9.9	A8= 6.2
BIAS	B2= -22.9	B3= -22.9	B4= -22.9	B5= -23.5	B6= -28.4	B7= -26.3	B8= -15.0
MEAN	P2= 39.2	P3= 39.2	P4= 39.2	P5= 39.3			
STD DEV	S2= 5.4	S3= 5.4	S4= 5.4	S5= 5.3			
BAND 2	MIN= 9 MAX= 76	MIN= 3 MAX=120	MIN= 10 MAX= 80	MIN= 20 MAX= 60			
GAIN	A2= 5.0	A3= 5.0	A4= 5.0	A5= 5.4	A6= 7.5	A7= 6.4	A8= 4.3
BIAS	B2= -20.7	B3= -20.7	B4= -20.7	B5= -22.3	B6= -29.2	B7= -26.2	B8= -12.0
MEAN	P2= 46.1	P3= 46.1	P4= 46.1	P5= 46.0			
STD DEV	S2= 6.5	S3= 8.5	S4= 6.5	S5= 7.9			
BAND 3	MIN= 3 MAX= 77	MIN= 5 MAX=120	MIN= 10 MAX= 80	MIN= 20 MAX= 60			
GAIN	A2= 5.8	A3= 5.9	A4= 6.2	A5= 7.3	A6= 8.8	A7= 8.1	A8= 3.9
BIAS	B2= -31.3	B3= -31.6	B4= -32.6	B5= -34.5	B6= -38.6	B7= -37.5	B8= -6.0
MEAN	P2= 53.2	P3= 53.3	P4= 53.4	P5= 52.0			
STD DEV	S2= 7.3	S3= 7.2	S4= 6.9	S5= 5.8			
BAND 4	MIN= 0 MAX= 34	MIN= 2 MAX= 61	MIN= 5 MAX= 40	MIN= 7 MAX= 30			
GAIN	A2= 11.6	A3= 11.8	A4= 13.6	A5= 14.5	A6= 17.4	A7= 17.9	A8= 9.1
BIAS	B2= -10.4	B3= -10.6	B4= -12.3	B5= -12.9	B6= -14.1	B7= -14.4	B8= -2.0
MEAN	P2= 21.5	P3= 21.5	P4= 21.7	P5= 21.8			
STD DEV	S2= 3.7	S3= 3.6	S4= 3.1	S5= 3.0			

FILE: 1 MERGE TAPE: 10008 IMAGE NO. 1 SUN ELEV= 0

BAND 1	GAIN	A11=	9.4	A12=	11.9	A13=	14.9	A14=	8.8	A15=	12.8	A16=	6.2	A17=	8.8	A18=	12.8
	BIAS	B11=	-25.6	B12=	-28.5	B13=	-30.6	B14=	-23.0	B15=	-29.0	B16=	-22.0	B17=	-26.0	B18=	-29.0
BAND 2	GAIN	A11=	6.0	A12=	7.7	A13=	9.6	A14=	6.1	A15=	8.0	A16=	4.3	A17=	6.1	A18=	8.0
	BIAS	B11=	-24.9	B12=	-29.5	B13=	-32.8	B14=	-21.0	B15=	-28.0	B16=	-9.0	B17=	-9.0	B18=	-9.0
BAND 3	GAIN	A11=	7.0	A12=	9.7	A13=	12.2	A14=	5.7	A15=	9.5	A16=	3.9	A17=	5.7	A18=	9.5
	BIAS	B11=	-35.0	B12=	-40.1	B13=	-42.7	B14=	-22.0	B15=	-37.0	B16=	-3.0	B17=	-3.0	B18=	-3.0
BAND 4	GAIN	A11=	13.9	A12=	21.5	A13=	26.9	A14=	10.2	A15=	13.5	A16=	9.1	A17=	10.2	A18=	13.5
	BIAS	B11=	-12.3	B12=	-15.6	B13=	-16.7	B14=	-3.0	B15=	-8.0	B16=	-19.0	B17=	-19.0	B18=	-19.0

		MAX(HI)/MIN(LO)	P1/S1	P2/S2
BANDS	GAIN	A19= 5.0	A26=******	A28= 4.5
1, 2, 2(4)	BIAS	B19= -20.7	B26=******	B28= -62.4
BANDS	GAIN	A20= 4.7	A27=******	A29= 4.6
2, 3, 2(4)	BIAS	B20= -20.7	B27=******	B29= -91.4

28

FILE: 1 MERGE TAPE: 10008 IMAGE NO. 1 SUN ELEV= 0

	TRUNCATED @ P2 +/- 3 S2	TRUNCATED @ P2(NEW) +/- 3 S2(NEW)
BAND 1		
GAIN , BIAS	A21= 8.3 , B21= -23.9	A22= 8.4 , B22= -24.1
BAND 2		
GAIN , BIAS	A21= 5.2 , B21= -21.9	A22= 5.3 , B22= -22.1
BAND 3		
GAIN , BIAS	A21= 7.1 , B21= -35.8	A22= 7.4 , B22= -36.4
BAND 4		
GAIN , BIAS	A21= 17.0 , B21= -14.4	A22= 18.1 , B22= -14.9

ORIGINAL PAGE IS
OF POOR QUALITY

FILE: 1 MERGE TAPE: 10008 IMAGE NO. 1 SUN ELEV= 0

BAND 1	MIN= 4 MAX= 80	CA= 8 CB= 16 (P1)	CA= 8 CB= 16 (P2)
GAIN	A23=******	A24=******	A25= 8.0
BIAS	B23=******	B24=******	B25=-185.9
BAND 2	MIN= 4 MAX= 80	CA= 5 CB= 26 (P1)	CA= 5 CB= 26 (P2)
GAIN	A23=******	A24=******	A25= 5.0
BIAS	B23=******	B24=******	B25=-100.6
BAND 3	MIN= 4 MAX= 80	CA= 5 CB= 32 (P1)	CA= 5 CB= 32 (P2)
GAIN	A23=******	A24=******	A25= 5.0
BIAS	B23=******	B24=******	B25=-106.2
BAND 4	MIN= 2 MAX= 40	CA= 10 CB= 13 (P1)	CA= 10 CB= 13 (P2)
GAIN	A23=******	A24=******	A25= 10.0
BIAS	B23=******	B24=******	B25= -85.0

FROM PFCGAB:
FILE NO. 1 , NO. SCAN LINES READ = 117 , FOR IMAGE NO. 2

FILE: 1 MERGE TAPE: 10008 IMAGE NO. 2 SUN ELEV= 0

5 X 6 AREA

FREQUENCY DISTRIBUTION

PIXEL VALUE	BAND 5 FREQ	BAND 5 %	BAND 6 FREQ	BAND 6 %	BAND 7 FREQ	BAND 7 %	BAND 8 FREQ	BAND 8 %
1							26	.1
2					1	.0	62	.3
3							62	.3
4					1	.0	50	.2
5					5	.0	68	.3
6					8	.0	86	.4
7			1	.0	29	.1	151	.7
8					15	.1	105	.5
9			7	.0	13	.1	107	.5
10			6	.0	12	.1	102	.4
11			23	.1	22	.1	93	.4
12	1	.0	35	.2	13	.1	107	.5
13	6	.0	46	.2	15	.1	115	.5
14	11	.0	58	.3	26	.1	144	.6
15	14	.1	37	.2	52	.2	126	.5
16	33	.1	60	.3	27	.1	125	.5
17	26	.1	15	.1	51	.2	200	.9
18	76	.3	53	.2	46	.2	240	1.0
19	85	.4	94	.4	39	.2	340	1.5
20	86	.4	144	.6	36	.2	323	1.4
21	123	.5	162	.7	32	.1	493	2.1
22	128	.6	139	.6	53	.2	706	3.1
23	152	.7	82	.4	50	.2	999	4.4
24	63	.3	44	.2	16	.1	953	4.2
25	160	.7	260	1.1	47	.2	1792	7.8
26	345	1.5	198	.9	41	.2	2361	10.3
27			170	.7	45	.2	2875	12.5
28	351	1.5	184	.8	40	.2	2407	10.5
29	645	2.8	656	2.9	44	.2	2627	11.5
30	269	1.2	145	.6			2070	9.0
31	669	2.9	557	2.4	68	.3	1353	5.9
32	541	2.4	245	1.1	35	.2	686	3.0
33	533	2.3	557	2.4	36	.2	332	1.4
34	1249	5.4	169	.7	64	.3	183	.8
35	543	2.4	159	.7			105	.5
36	355	1.5	640	2.8	68	.3	82	.4
37	591	2.5	157	.7	60	.3	65	.3
38	865	3.7	344	1.5	24	.1	42	.2
39	1022	4.5	510	2.2	69	.3	45	.2

121

40	972	4.2	170	.7	105	.5	37	.2
41	411	1.8	725	3.2	37	.2	29	.1
42	917	4.0	440	1.9	90	.4	27	.1
43	1720	7.5	529	2.3	250	1.1	10	.0
44	71	.3	381	1.7	3	.0	6	.0
45	1287	5.6	609	2.7	44	.2	9	.0
46	1495	6.5	700	3.1	315	1.4	1	.0
47	1446	6.3			145	.6	1	.0
48	504	2.2	1169	5.1	254	1.1	3	.0
49	1467	6.4	474	2.1	105	.5		
50	1216	5.3	301	1.3	171	.7	1	.0
51	210	.9	1579	6.9	299	1.3		
52	509	2.2	851	3.7	253	1.1		
53	460	2.0	383	1.7	253	1.1		
54	264	1.2	591	2.6	344	1.5		
55	75	.3			199	.9		
56	167	.7	1088	4.7	899	3.9		
57	88	.4	793	3.5	551	2.4		
58	29	.1			359	1.6		
59	67	.3	1346	5.9	1054	4.6		
60	24	.1	528	2.3	614	2.7		
61	62	.3	138	.6	432	1.9		
62	31	.1	1011	4.4	1793	7.8		
63	18	.1	569	2.5	943	4.1		
64	47	.2			940	4.1		
65	22	.1	31	.1	490	2.1		
66			1143	5.0	1002	4.4		
67	47	.2			1631	7.1		
68	23	.1	237	1.0	1032	4.5		
69			231	1.0	1024	4.5		
70	32	.1			53	.2		
71	32	.1	311	1.4	1937	8.4		
72			50	.2	477	2.1		
73	23	.1	6	.0	394	1.7		
74	29	.1	130	.6	1041	4.5		
75			20	.1				
76	10	.0	14	.1	568	2.5		
77	45	.2	86	.4	354	1.5		
78			15	.1	434	1.9		
79					59	.3		
80	28	.1	24	.1	6	.0		
81	21	.1	31	.1	81	.4		
82			10	.0	103	.4		
83	8	.0	12	.1	67	.3		
84	24	.1	14	.1	84	.4		
85			21	.1				
86			14	.1	13	.1		
87	9	.0	14	.1	37	.2		
88	20	.1	7	.0	29	.1		
89	4	.0	23	.1	20	.1		
90			8	.0	20	.1		
91	8	.0	9	.0	13	.1		
92	6	.0	19	.1	17	.1		
93	3	.0	11	.0	25	.1		
94			5	.0	23	.1		
95	5	.0	6	.0				
96	9	.0	27	.1	34	.1		
97			2	.0				

/32

| | | |

FILE: 1 MERGE TAPE: 10008 IMAGE NO. 2 SUN ELEV= 0

STATISTICS

5 X 6 AREA

		BAND 5		BAND 6		BAND 7		BAND 8	
		5 X 6 AREA DATA	SUN ELEV CORR	5 X 6 AREA DATA	SUN ELEV CORR	5 X 6 AREA DATA	SUN ELEV CORR	5 X 6 AREA DATA	SUN ELEV CORR
MIN		12		7		2		1	
MAX		113		123		127		50	
RANGE		101		116		125		49	
MEAN	P2=	41.7		48.6		62.8		26.0	
STD DEVIATION	S2=	9.7		14.1		13.1		5.7	
MEAN DEVIATION		7.4		11.2		9.0		3.9	
MEDIAN		43		51		64		27	
MODE		43		51		71		27	

134

FILE: 1 HERGE TAPE: 10008 IMAGE NO. 2 SUN ELEV= 0

5 X 6 AREA

PERCENT EXCEEDING SELECTED VALUES

	BAND 5	BAND 6	BAND 7	BAND 8
% > 60	2.6	21.1	69.8	.0
% > 90	.2	.7	1.5	.0

135

FILE: 1 MERGE TAPE: 10008 IMAGE NO. 2 SUN ELEV= 0

	AREA (10 X 11)	AREA (5 X 6)	TRUNCATED		MOD. STD DEV	AVERAGE	PERCENT
BAND 5	MIN= 12 MAX=113	MIN= 4 MAX=120	MIN= 10 MAX= 80	MIN= 20 MAX= 60			
GAIN	A2= 4.4	A3= 4.4	A4= 4.7	A5= 5.4	A6= 6.6	A7= 5.8	A8= 3.4
BIAS	B2= -12.6	B3= -12.6	B4= -14.1	B5= -17.3	B6= -22.3	B7= -19.6	B8= -15.0
MEAN	P2= 41.7	P3= 41.7	P4= 41.5	P5= 41.2			
STD DEV	S2= 9.7	S3= 9.7	S4= 9.1	S5= 8.0			
BAND 6	MIN= 7 MAX=123	MIN= 3 MAX=120	MIN= 10 MAX= 80	MIN= 20 MAX= 60			
GAIN	A2= 3.0	A3= 3.0	A4= 3.2	A5= 4.1	A6= 4.5	A7= 3.8	A8= 2.8
BIAS	B2= -6.2	B3= -6.2	B4= -8.3	B5= -13.3	B6= -20.3	B7= -14.9	B8= -11.0
MEAN	P2= 48.6	P3= 48.6	P4= 48.1	P5= 44.9			
STD DEV	S2= 14.1	S3= 14.1	S4= 13.3	S5= 10.5			
BAND 7	MIN= 2 MAX=127	MIN= 5 MAX=120	MIN= 10 MAX= 80	MIN= 20 MAX= 60			
GAIN	A2= 3.3	A3= 3.3	A4= 3.7	A5= 4.5	A6= 4.9	A7= 4.7	A8= 2.4
BIAS	B2= -23.4	B3= -23.6	B4= -27.0	B5= -23.0	B6= -36.5	B7= -35.8	B8= -7.0
MEAN	P2= 62.8	P3= 62.7	P4= 61.9	P5= 51.2			
STD DEV	S2= 13.1	S3= 13.1	S4= 11.7	S5= 9.4			
BAND 8	MIN= 1 MAX= 50	MIN= 2 MAX= 61	MIN= 5 MAX= 40	MIN= 7 MAX= 30			
GAIN	A2= 7.4	A3= 7.5	A4= 8.2	A5= 9.3	A6= 11.2	A7= 11.0	A8= 6.2
BIAS	B2= -8.8	B3= -9.0	B4= -10.4	B5= -11.5	B6= -14.5	B7= -14.3	B8= -2.0
MEAN	P2= 26.0	P3= 26.0	P4= 26.1	P5= 25.3			
STD DEV	S2= 5.7	S3= 5.7	S4= 5.2	S5= 4.6			

136

FILE: 1 MERGE TAPE: 10008 IMAGE NO. 2 SUN ELEV= 0

BAND 5	GAIN	A11=	5.3	A12=	6.9	A13=	8.7	A14=	4.1	A15=	6.6	A16=	3.4	A17=	4.1	A18=	6.6
	BIAS	B11=	-17.5	B12=	-23.3	B13=	-27.0	B14=	-18.0	B15=	-22.0	B16=	-12.0	B17=	-12.0	B18=	-20.0
BAND 6	GAIN	A11=	3.6	A12=	4.6	A13=	5.7	A14=	3.4	A15=	4.7	A16=	2.8	A17=	3.4	A18=	4.7
	BIAS	B11=	-13.3	B12=	-20.6	B13=	-26.2	B14=	-14.0	B15=	-20.0	B16=	-7.0	B17=	-7.0	B18=	-16.0
BAND 7	GAIN	A11=	3.9	A12=	5.7	A13=	7.1	A14=	2.9	A15=	4.2	A16=	2.4	A17=	2.9	A18=	4.3
	BIAS	B11=	-30.0	B12=	-40.3	B13=	-44.8	B14=	-14.0	B15=	-23.0	B16=	-2.0	B17=	-2.0	B18=	-2.0
BAND 8	GAIN	A11=	8.9	A12=	13.2	A13=	16.5	A14=	7.1	A15=	9.8	A16=	6.2	A17=	7.1	A18=	9.8
	BIAS	B11=	-11.6	B12=	-16.3	B13=	-18.2	B14=	-3.0	B15=	-8.0	B16=	-1.0	B17=	-1.0	B18=	-1.0

		MAX(HI)/MIN(LO)		P1/S1	P2/S2
BANDS	GAIN	A19=	3.0	A26=******	A28= 2.9
1, 2, 2(4)	BIAS	B19=	-6.2	B26=******	B28= -11.1
BANDS	GAIN	A20=	2.7	A27=******	A29= 2.7
2, 3, 2(4)	BIAS	B20=	-6.2	B27=******	B29= -16.9

ORIGINAL PAGE IS OF POOR QUALITY

FILE: 1 MERGE TAPE: 10008 IMAGE NO. 2 SUN ELEV= 0

	TRUNCATED @ P2 +/- 3 S2	TRUNCATED @ P2(NEW) +/- 3 S2(NEW)
BAND 5		
GAIN , BIAS	A21= 4.9 , B21= -15.1	A22= 5.0 , B22= -15.6
BAND 6		
GAIN , BIAS	A21= 3.1 , B21= -7.5	A22= 3.1 , B22= -7.6
BAND 7		
GAIN , BIAS	A21= 4.0 , B21= -31.5	A22= 4.4 , B22= -35.0
BAND 8		
GAIN , BIAS	A21= 9.2 , B21= -12.6	A22= 10.6 , B22= -14.7

FILE: 1 MERGE TAPE: 10008 IMAGE NO. 2 SUN ELEV= 0

BAND 5	MIN= 4 MAX= 80	CA= 8 CB= 16 (P1)	CA= 8 CB= 16 (P2)	
GAIN	A23=******	A24=*******	A25= 8.0	
BIAS	B23=******	B24=*******	B25=-205.9	
BAND 6	MIN= 4 MAX= 80	CA= 5 CB= 26 (P1)	CA= 5 CB= 26 (P2)	
GAIN	A23=******	A24=*******	A25= 5.0	
BIAS	B23=******	B24=*******	B25=-113.2	
BAND 7	MIN= 4 MAX= 80	CA= 5 CB= 32 (P1)	CA= 5 CB= 32 (P2)	
GAIN	A23=******	A24=*******	A25= 5.0	
BIAS	B23=******	B24=*******	B25=-153.8	
BAND 8	MIN= 2 MAX= 40	CA= 10 CB= 13 (P1)	CA= 10 CB= 13 (P2)	
GAIN	A23=******	A24=*******	A25= 10.0	
BIAS	B23=******	B24=*******	B25=-129.7	

FROM PFCGAB:

FILE NO. 1 ; NO. SCAN LINES READ = 117 ; FOR IMAGE NO. 3

FILE: 1 MERGE TAPE: 10008 IMAGE NO. 3 SUN ELEV= 0

5 X 6 AREA

FREQUENCY DISTRIBUTION

PIXEL VALUE	BAND 9		BAND 10		BAND 11		BAND 12	
	FREQ	%	FREQ	%	FREQ	%	FREQ	%
0							1	.0
1							12	.1
2	1	.0					79	.3
3					4	.0	82	.4
4					2	.0	108	.5
5					5	.0	118	.5
6			2	.0	1	.0	150	.7
7			3	.0	11	.0	170	.7
8			10	.0	31	.1	127	.6
9			16	.1	19	.1	104	.5
10			66	.3	56	.2	89	.4
11	1	.0	106	.5	71	.3	99	.4
12	15	.1	102	.4	11	.0	137	.6
13	29	.1	72	.3	82	.4	138	.6
14	77	.3	142	.6	49	.2	131	.6
15	75	.3	167	.7	76	.3	132	.6
16	44	.2	88	.4	52	.2	317	1.4
17	128	.6	47	.2	60	.3	813	3.5
18	128	.6	277	1.2	65	.3	1246	5.4
19	220	1.0	222	1.0	47	.2	1541	6.7
20	137	.6	359	1.6	77	.3	1770	7.7
21	340	1.5	699	3.0	28	.1	2120	9.2
22	788	3.4	655	2.9	44	.2	2597	11.3
23	605	2.6	174	.8	39	.2	2776	12.1
24	26	.1	170	.7	51	.2	2278	9.9
25	994	4.3	1007	4.4	63	.3	1346	5.9
26	1492	6.5	1169	5.2	26	.1	1113	4.9
27			269	1.2	49	.2	734	3.2
28	1190	5.2	278	1.2	67	.3	572	2.5
29	1890	8.2	1418	6.2	71	.3	362	1.6
30	1017	4.4	1387	6.0	18	.1	269	1.2
31	1044	4.6	48	.2	82	.4	183	.8
32	1626	7.1	568	2.5	34	.1	143	.6
33	520	2.3	1079	4.7	64	.3	123	.5
34	2216	9.7	349	1.5	73	.3	101	.4
35	1528	6.7	402	1.8	23	.1	94	.4
36	670	2.9	1026	4.5	94	.4	66	.3
37	718	3.1	418	1.8	51	.2	83	.4
38	592	2.6	1090	4.8	75	.3	71	.3

| | | |

97	10	.0				
98	22	.1	8	.0	13	.1
99	7	.0	29	.1	10	.0
100	4	.0	11	.0	45	.2
101	22	.1			14	.1
102	17	.1	10	.0	14	.1
103	10	.0	22	.1	15	.1
104			9	.0		
105	11	.0			41	.2
106	12	.1	5	.0	29	.1
107	18	.1	27	.1	4	.0
108	2	.0	21	.1		
109	5	.0			34	.1
110	7	.0	4	.0	11	.0
111	11	.0	14	.1		
112	9	.0	18	.1	6	.0
113	4	.0			33	.1
114	18	.1	6	.0	7	.0
115	5	.0	9	.0	15	.1
116	4	.0	26	.1	14	.1
117	6	.0			15	.1
118	1	.0	6	.0		
119	6	.0	3	.0	8	.0
120	4	.0	20	.1	51	.2
121	9	.0			2	.0
122	6	.0	6	.0		
123	3	.0	4	.0	11	.0
124	6	.0	12	.1	7	.0
125	5	.0	4	.0	9	.0
126	13	.1	9	.0		
127	134	.6	203	.9	250	1.1

FILE: 1 MERGE TAPE: 19008 IMAGE NO. 3 SUN ELEV= 0

STATISTICS

5 X 6 AREA

		BAND 9		BAND 10		BAND 11		BAND 12	
		5 X 6 AREA DATA	SUN ELEV CORR	5 X 6 AREA DATA	SUN ELEV CORR	5 X 6 AREA DATA	SUN ELEV CORR	5 X 6 AREA DATA	SUN ELEV CORR
MIN		2		6		3		0	
MAX		127		127		127		63	
RANGE		125		121		124		63	
MEAN	P2=	35.2		37.8		53.0		22.3	
STD DEVIATION	S2=	15.3		17.6		15.9		6.5	
MEAN DEVIATION		8.8		11.5		9.2		4.1	
MEDIAN		32		36		52		22	
MODE		34		41		53		23	

143

FILE: 1 MERGE TAPE: 10008 IMAGE NO. 3 SUN ELEV= 0

5 X 6 AREA

PERCENT EXCEEDING SELECTED VALUES

	BAND 9	BAND 10	BAND 11	BAND 12
% > 60	5.4	6.8	15.7	.1
% > 90	2.1	2.7	3.7	.0

FILE: 1 MERGE TAPE: 10008 IMAGE NO. 3 SUN ELEV= 0

	AREA (10 X 11)	TRUNCATED (5 X 6)			MOD. STD DEV	AVERAGE	PERCENT
BAND 9	MIN= 2 MAX=127	MIN= 4 MAX=120	MIN= 10 MAX= 80	MIN= 20 MAX= 60			
GAIN	A2= 2.6	A3= 3.3	A4= 4.5	A5= 6.0	A6= 4.2	A7= 4.9	A8= 2.2
BIAS	B2= 10.7	B3= 4.8	B4= -4.9	B5= -11.5	B6= -4.6	B7= -8.8	B8= -13.0
MEAN	P2= 35.2	P3= 34.5	P4= 33.1	P5= 32.8			
STD DEV	S2= 15.3	S3= 13.1	S4= 9.4	S5= 7.1			
BAND 10	MIN= 6 MAX=127	MIN= 3 MAX=120	MIN= 10 MAX= 80	MIN= 20 MAX= 60			
GAIN	A2= 2.4	A3= 2.8	A4= 3.6	A5= 4.7	A6= 3.6	A7= 3.7	A8= 2.2
BIAS	B2= 15.0	B3= 8.6	B4= -.2	B5= -8.1	B6= -2.6	B7= -3.2	B8= -9.0
MEAN	P2= 37.8	P3= 36.8	P4= 35.4	P5= 35.4			
STD DEV	S2= 17.6	S3= 15.1	S4= 11.7	S5= 9.1			
BAND 11	MIN= 3 MAX=127	MIN= 5 MAX=120	MIN= 10 MAX= 80	MIN= 20 MAX= 60			
GAIN	A2= 2.7	A3= 3.1	A4= 4.2	A5= 6.3	A6= 4.0	A7= 4.7	A8= 2.2
BIAS	B2= -5.2	B3= -10.9	B4= -20.0	B5= -29.4	B6= -21.1	B7= -25.6	B8= -8.0
MEAN	P2= 53.0	P3= 52.2	P4= 50.5	P5= 49.8			
STD DEV	S2= 15.9	S3= 13.8	S4= 10.2	S5= 6.8			
BAND 12	MIN= 0 MAX= 63	MIN= 2 MAX= 61	MIN= 5 MAX= 40	MIN= 7 MAX= 30			
GAIN	A2= 6.5	A3= 6.6	A4= 8.5	A5= 10.7	A6= 9.8	A7= 10.3	A8= 4.6
BIAS	B2= -2.8	B3= -2.7	B4= -7.0	B5= -9.7	B6= -9.3	B7= -9.9	B8= -2.0
MEAN	P2= 22.3	P3= 22.3	P4= 22.1	P5= 21.7			
STD DEV	S2= 6.5	S3= 6.5	S4= 5.0	S5= 4.0			

FILE: 1 MERGE TAPE: 10008 IMAGE NO. 3 SUN ELEV= 0

BAND 9	GAIN	A11=	3.3	A12=	5.8	A13=	7.3	A14=	2.3	A15=	3.8	A16=	2.2	A17=	2.3	A18=	3.8
	BIAS	B11=	3.1	B12=	-13.2	B13=	-17.6	B14=	-15.0	B15=	-19.0	B16=	-26.0	B17=	-26.0	B18=	-28.0
BAND 10	GAIN	A11=	2.9	A12=	4.4	A13=	5.6	A14=	2.2	A15=	3.2	A16=	2.2	A17=	2.2	A18=	3.2
	BIAS	B11=	6.2	B12=	-9.0	B13=	-14.7	B14=	-11.0	B15=	-14.0	B16=	-22.0	B17=	-22.0	B18=	-22.0
BAND 11	GAIN	A11=	3.2	A12=	5.6	A13=	7.0	A14=	2.2	A15=	2.9	A16=	2.2	A17=	2.2	A18=	2.9
	BIAS	B11=	-13.2	B12=	-30.1	B13=	-34.7	B14=	-11.0	B15=	-17.0	B16=	-44.0	B17=	-45.0	B18=	-45.0
BAND 12	GAIN	A11=	7.8	A12=	12.4	A13=	15.5	A14=	5.4	A15=	7.8	A16=	4.6	A17=	5.4	A18=	7.8
	BIAS	B11=	-6.0	B12=	-12.0	B13=	-14.1	B14=	-3.0	B15=	-6.0	B16=	-7.0	B17=	-8.0	B18=	-12.0

		MAX(HI)/MIN(LO)		P1/S1	P2/S2	
BANDS	GAIN	A19=	2.4	A26=******	A28=	2.4
1, 2, 2(4)	BIAS	B19=	15.0	B26=******	B28=	35.5
BANDS	GAIN	A20=	2.2	A27=******	A29=	2.1
2, 3, 2(4)	BIAS	B20=	15.0	B27=******	B29=	31.9

FILE: 1 MERGE TAPE: 10008 IMAGE NO. 3 SUN ELEV= 0

	TRUNCATED @ P2 +/- 3 S2	TRUNCATED @ P2(NEW) +/- 3 S2(NEW)
BAND 9 GAIN , BIAS	A21= 65.2 , B21= 8.0	A22= 85.4 , B22= 8.0
BAND 10 GAIN , BIAS	A21= 3.4 , B21= 2.2	A22= 3.8 , B22= -1.2
BAND 11 GAIN , BIAS	A21= 3.6 , B21= -15.3	A22= 4.4 , B22= -22.0
BAND 12 GAIN , BIAS	A21= 7.9 , B21= -5.7	A22= 9.0 , B22= -7.8

147

FILE: 1 MERGE TAPE: 10008 IMAGE NO. 3 SUN ELEV= 3

BAND 9	MIN= 4 MAX= 80	CA= 8 CB= 16 (P1)	CA= 8 CB= 16 (P2)	
GAIN	A23=******	A24=******	A25= 8.0	
BIAS	B23=******	B24=******	B25=-153.3	
BAND 10	MIN= 4 MAX= 80	CA= 5 CB= 26 (P1)	CA= 5 CB= 26 (P2)	
GAIN	A23=******	A24=******	A25= 5.0	
BIAS	B23=******	B24=******	B25= -58.9	
BAND 11	MIN= 4 MAX= 80	CA= 5 CB= 32 (P1)	CA= 5 CB= 32 (P2)	
GAIN	A23=******	A24=******	A25= 5.0	
BIAS	B23=******	B24=******	B25=-105.2	
BAND 12	MIN= 2 MAX= 40	CA= 10 CB= 13 (P1)	CA= 10 CB= 13 (P2)	
GAIN	A23=******	A24=******	A25= 10.0	
BIAS	B23=******	B24=******	B25= -93.3	

FROM PFCGAB:

FILE NO. 1 , NO. SCAN LINES READ = 117 , FOR IMAGE NO. 4

FILE: 1 MERGE TAPE: 10008 IMAGE NO. 4 SUN ELEV= 0

5 X 6 AREA

FREQUENCY DISTRIBUTION

PIXEL VALUE	BAND 13		BAND 14		BAND 15		BAND 16	
	FREQ	%	FREQ	%	FREQ	%	FREQ	%
0					3	.0	37	.2
1					3	.0	82	.4
2					13	.1	72	.3
3					8	.0	115	.5
4					13	.1	101	.4
5			3	.0	21	.1	59	.3
6			28	.1	31	.1	65	.3
7			65	.3	58	.3	75	.3
8			92	.4	72	.3	160	.7
9			115	.5	36	.2	392	1.7
10	15	.1	72	.3	63	.3	837	3.6
11	140	.6	48	.2	46	.2	1424	6.2
12	62	.3	43	.2	32	.1	1750	7.6
13	153	.7	126	.5	29	.1	2015	8.8
14	62	.3	218	1.0	32	.1	2379	10.4
15	62	.3	182	.8	34	.1	2401	10.5
16	65	.3	311	1.4	24	.1	2491	10.9
17	155	.7	95	.4	28	.1	2367	10.3
18	800	3.5	681	3.0	83	.4	2084	9.1
19	1505	6.6	520	2.3	20	.1	1590	6.9
20	1544	6.7	1282	5.6	123	.5	1023	4.5
21	4935	21.5	2276	9.9	89	.4	491	2.1
22	3822	16.7	2817	12.3	162	.7	385	1.7
23	3504	15.3	1081	4.7	254	1.1	222	1.0
24	675	2.9	738	3.2	495	2.2	134	.6
25	1887	8.2	3607	15.7	365	1.6	78	.3
26	1775	7.7	2514	11.0	200	.9	53	.2
27			938	4.1	1096	4.8	22	.1
28	724	3.2	502	2.2	792	3.5	12	.1
29	421	1.8	1713	7.5	866	3.8	7	.0
30	294	1.3	733	3.2	335	1.5	8	.0
31	130	.6	648	2.8	1105	4.8		
32	53	.2	167	.7	790	3.4		
33	50	.2	524	2.3	1252	5.5		
34	49	.2	104	.5	1437	6.3		
35	12	.1	114	.5	469	2.0		
36	2	.0	273	1.2	2045	8.9		
37	8	.0	2	.0	1130	4.9	1	.0
38	9	.0	111	.5	521	2.3		

39	1	.0	83	.4	2735	11.9
40	9	.0	7	.0	1450	6.3
41	2	.0	82	.4	435	1.9
42			3	.0	972	4.2
43	1	.0	11	.0	900	3.9
44	1	.0	1	.0	495	2.2
45					688	3.0
46					230	1.0
47					134	.6
48			1	.0	221	1.0
49					108	.5
50	1	.0			163	.7
51					64	.3
52					24	.1
53					67	.3
54					8	.0
55					13	.1
56					25	.1
57						
58			1	.0	12	.1
59					4	.0
60					1	.0
61					4	.0
62					3	.0
63						
64					1	.0

FILE: 1 MERGE TAPE: 10008 IMAGE NO. 4 SUN ELEV= 0

STATISTICS

5 X 6 AREA

		BAND 13		BAND 14		BAND 15		BAND 16	
		5 X 6 AREA DATA	SUN ELEV CORR	5 X 6 AREA DATA	SUN ELEV CORR	5 X 6 AREA DATA	SUN ELEV CORR	5 X 6 AREA DATA	SUN ELEV CORR
MIN		10		5		0		0	
MAX		50		58		64		37	
RANGE		40		53		64		37	
MEAN	P2=	22.4		24.3		35.0		15.2	
STD DEVIATION	S2=	3.3		5.1		7.6		3.8	
MEAN DEVIATION		2.4		3.8		5.8		3.0	
MEDIAN		22		25		36		15	
MODE		21		25		39		16	

151

FILE: 1 MERGE TAPE: 10008 IMAGE NO. 4 SUN ELEV= 0

5 A 6 AREA

PERCENT EXCEEDING SELECTED VALUES

	BAND 13	BAND 14	BAND 15	BAND 16
% > 60	.0	.0	.0	.0
% > 90	.0	.0	.0	.0

FILE: 1 MERGE TAPE: 10008 IMAGE NO. 4 SUN ELEV= 0

	AREA (10 X 11)	AREA (5 X 6)	TRUNCATED				MOD. STD DEV		AVERAGE		PERCENT	
BAND 13	MIN= 10 MAX= 50		MIN= 4 MAX=120		MIN= 10 MAX= 80		MIN= 20 MAX= 60					
GAIN	A2= 13.1		A3= 13.1		A4= 13.1		A5= 15.9	A6= 19.7	A7= 18.1		A8= 9.8	
BIAS	B2= -12.6		B3= -12.6		B4= -12.6		B5= -15.1	B6= -15.9	B7= -15.4		B8= -11.0	
MEAN	P2= 22.4		P3= 22.4		P4= 22.4		P5= 23.1					
STD DEV	S2= 3.3		S3= 3.3		S4= 3.3		S5= 2.7					
BAND 14	MIN= 5 MAX= 58		MIN= 3 MAX=120		MIN= 10 MAX= 80		MIN= 20 MAX= 60					
GAIN	A2= 8.4		A3= 8.4		A4= 9.0		A5= 10.5	A6= 12.6	A7= 11.2		A8= 7.3	
BIAS	B2= -9.0		B3= -9.0		B4= -10.2		B5= -13.2	B6= -14.1	B7= -12.8		B8= -6.0	
MEAN	P2= 24.3		P3= 24.3		P4= 24.5		P5= 25.4					
STD DEV	S2= 5.1		S3= 5.1		S4= 4.8		S5= 4.1					
BAND 15	MIN= 0 MAX= 64		MIN= 5 MAX=120		MIN= 10 MAX= 80		MIN= 20 MAX= 60					
GAIN	A2= 5.6		A3= 5.7		A4= 6.1		A5= 6.6	A6= 8.4	A7= 7.3		A8= 4.9	
BIAS	B2= -12.2		B3= -12.6		B4= -14.3		B5= -16.4	B6= -19.8	B7= -17.6		B8= -4.0	
MEAN	P2= 35.0		P3= 35.1		P4= 35.4		P5= 35.7					
STD DEV	S2= 7.6		S3= 7.5		S4= 7.0		S5= 6.5					
BAND 16	MIN= 0 MAX= 37		MIN= 2 MAX= 61		MIN= 5 MAX= 40		MIN= 7 MAX= 30					
GAIN	A2= 11.1		A3= 11.5		A4= 12.3		A5= 12.6	A6= 16.6	A7= 14.5		A8= 9.5	
BIAS	B2= -3.6		B3= -4.1		B4= -5.0		B5= -5.3	B6= -7.5	B7= -6.3		B8= .0	
MEAN	P2= 15.2		P3= 15.2		P4= 15.4		P5= 15.4					
STD DEV	S2= 3.8		S3= 3.7		S4= 3.5		S5= 3.4					

FILE: 1 MERGE TAPE: 1000H IMAGE NO. 4 SUN ELEV= 0

BAND 13	GAIN	A11=	15.7	A12=	21.8	A13=	27.2	A14=	12.2	A15=	18.3	A16=	9.8	A17=	12.2	A18=	18.3
	BIAS	B11=	-14.3	B12=	-16.5	B13=	-17.7	B14=	-11.0	B15=	-16.0	B16=	-19.0	B17=	-19.0	B18=	-19.0
BAND 14	GAIN	A11=	10.1	A12=	13.4	A13=	16.8	A14=	8.3	A15=	11.1	A16=	7.3	A17=	8.3	A18=	11.1
	BIAS	B11=	-11.6	B12=	-14.7	B13=	-16.6	B14=	-8.0	B15=	-13.0	B16=	-5.0	B17=	-5.0	B18=	-5.0
BAND 15	GAIN	A11=	6.7	A12=	8.8	A13=	11.0	A14=	5.7	A15=	8.0	A16=	4.9	A17=	5.7	A18=	8.3
	BIAS	B11=	-16.0	B12=	-20.5	B13=	-23.4	B14=	-7.0	B15=	-16.0	B16=	.0	B17=	.0	B18=	.0
BAND 16	GAIN	A11=	13.3	A12=	17.3	A13=	21.7	A14=	11.1	A15=	15.1	A16=	9.5	A17=	11.1	A18=	15.1
	BIAS	B11=	-5.5	B12=	-7.8	B13=	-9.3	B14=	-2.0	B15=	-6.0	B16=	-6.0	B17=	-8.0	B18=	-9.0

		MAX(HI)/MIN(LO)		PI/S1	P2/S2	
BANDS	GAIN	A19=	5.5	A26=******	A28=	4.6
1, 2, 2(4)	BIAS	B19=	-7.3	B26=******	B28=	9.5
BANDS	GAIN	A20=	5.1	A27=******	A29=	4.6
2, 3, 2(4)	BIAS	B20=	-7.3	B27=******	B29=	-8.8

151

FILE: 1 MERGE TAPE: 10008 IMAGE NO. 4 SUN ELEV= 0

	TRUNCATED @ P2 +/- 3 S2	TRUNCATED @ P2(NEW) +/- 3 S2(NEW)
BAND 13		
GAIN , BIAS	A21= 14.6 , B21= -13.7	A22= 15.3 , B22= -14.1
BAND 14		
GAIN , BIAS	A21= 9.0 , B21= -10.1	A22= 9.2 , B22= -10.6
BAND 15		
GAIN , BIAS	A21= 6.3 , B21= -15.1	A22= 6.4 , B22= -15.7
BAND 16		
GAIN , BIAS	A21= 12.2 , B21= -4.8	A22= 12.5 , B22= -5.1

GAIN
BIAS

GAIN
BIAS

BAND 15

GAIN
BIAS

BAND 16

GAIN
BIAS

26 OCT 76 18:52:09 IDENT LXI ACCOUNT L88126 CARDS IN 25 CARDS OUT 0 PAGES 115 ELAPSED TIME 0 2 5;

-EXEC-II-UNIVAC-1108-1-V129A-JSC-NASA-HOUSTON-TX-

157

----------EXEC-11-UNIVAC-1108-1-V129A-JSC-NASA-HOUSTON-TX----------

OF POOR QUALITY

157

APPENDIX D

SAMPLE PFCGAB OUTPUT

FOR

GODDARD TAPE PROCESSING

SAMPLE OUTPUT: Goddard Tape, file 4 — NO INPUT SUN ANGLE, USE HEADER SUN ANGLE

```
INPUT IMAGE DATA TAPE INFORMATION:

  FORMAT                    UNIVERSAL
  NO. OF CHANNELS             4
  NO. OF PIXELS/LINE        196

                  HEADER :
                  -------

                  COMPUTING SYSTEM  ID          LACIP NDPF
                  LAST DIGIT OF YEAR           4
                  DAY NUMBER OF YEAR           317
                  DAILY TAPE SERIAL NO.          1
                      SENSOR ID                ERTS MSS
                         DATE                  13/11/74
                  ERTS MISSION NUMBER            1
                  SITE - SAMPLE SEG. NO.         117
                  CLOUD COVER 0 PERCENT OF 10X11 NR SEARCH AREA COVERED BY CLOUDS
                  FLAG INDICATING WHETHER A REFERENCE SCENE HAS BEEN USED FOR REGISTRATION----FLAG=0
                  (RTS SCENE/FRAME ID NUMBER FOR NEW DATA)
                   1  =ERTS MISSION NUMBER
                   616= DAY NUMBER RELATIVE TO LAUNCH AT TIME OF OBSERVATION
                   16 = HOUR AT TIME OF OBSERVATION
                   35 =MINUTE AT TIME OF OBSERVATION
                   0  = TENS OF SECONDS AT TIME OF OBSERVATION
                  DATA QUALITY CLASSIFICATION=0
                  CENTER OF SAMPLE SEGMENT

                   LATITUDE (GEODETIC)
                            NORTH
                   DEGREES              = 038
                   MINUTES              = 09

                   LONGITUDE (GEODETIC)
                            WEST
                   DEGREES              = 097
                   MINUTES              = 49
                  SUN ELEVATION  (DEGREES) 47
                  SUN AZIMUTH    (DEGREES) 135
                  BIAS FACTORS AND SCALING FACTORS-SIGNED BINARY
                   FOUR BYTES PER CHANNEL,WHERE FIRST TWO BYTES=BIAS FACTOR.
                   SECOND TWO BYTES=SCALING FACTOR.
                  CHANNEL 1 BIAS FACTOR=    -290.2
                            SCALING FACTOR=       13.4
                  CHANNEL 2 BIAS FACTOR=    -123.0
                            SCALING FACTOR=        8.3
                  CHANNEL 3 BIAS FACTOR=    -131.8
                            SCALING FACTOR=        6.6
                  CHANNEL 4 BIAS FACTOR=     -85.3
                            SCALING FACTOR=       13.6

  FIRST SCAN LINE NO.        1      FIRST PIXEL REFERENCE PT.      1

  FROM PICGAB:
  ------------
  FILE NO.    4    . NO. SCAN LINES READ =    117    . FOR IMAGE NO.    1
```

160

TAPE: 10007
FILE: 4

SEGMENT: 1117

EDAYHRMNS
ID: 161616350

LAT= 38: 9 N
LONG= 97:49 W

SUN ELEV: 47 SUN AZ: 135

5 X 6 AREA

FREQUENCY DISTRIBUTION

PIXEL VALUE	BAND 1		BAND 2		BAND 3		BAND 4	
	FREQ	%	FREQ	%	FREQ	%	FREQ	%
4							1	.0
5							15	.1
6							18	.1
7							9	.0
8							8	.0
9							12	.1
10							34	.1
11							78	.3
12							175	.8
13							384	1.7
14					2	.0	699	3.0
15			2	.0	3	.0	1014	4.4
16			1	.0			1839	8.0
17			6	.0	3	.0	2000	8.7
18			27	.1	3	.0	2220	9.7
19			13	.1	7	.0	2144	9.3
20	2	.0	81	.4	6	.0	1960	8.5
21			167	.7	14	.1	1695	7.4
22	3	.0	285	1.2	29	.1	1526	6.7
23	6	.0	475	2.1	28	.1	1222	5.3
24	33	.1	870	3.8	52	.2	1611	7.0
25	147	.6	881	3.8	90	.4	1253	5.5
26	549	2.4	1817	7.9	146	.6	1031	4.5
27	820	3.6	1755	7.7	287	1.3	814	3.5
28	3106	13.5	2874	12.5	144	.6	528	2.3
29	2402	10.5	2189	9.5	617	2.7	295	1.3
30	1259	5.5	1289	5.6	704	3.1	205	.9
31	4333	18.9	1743	7.6	678	3.0	92	.4
32	4471	19.5	2610	11.4	1396	6.1	38	.2
33	1358	5.9	814	3.5	503	2.2	11	.0
34	1817	7.9	1544	6.7	1759	7.7	1	.0
35	752	3.3	544	2.4	351	1.5		
36	749	3.3	980	4.3	1785	7.8		
37	440	1.9	70	.3	692	3.0		
38	282	1.2	690	3.0	1316	5.7		
39	170	.7	138	.6	1001	4.4		
40	128	.6	289	1.3	1011	4.4		
41			223	1.0	909	4.0		
42	53	.2	146	.6	1351	5.9		

43	18	.1	143	.6	1397	6.1
44	4	.0			723	3.2
45	19	.1	135	.5	1657	7.2
46	2	.0	45	.2	1060	4.6
47	5	.0	50	.2	586	2.6
48	1	.0	32	.1	727	3.2
49			19	.1	637	2.8
50	1	.0	5	.0	480	2.1
51			5	.0	269	1.2
52	1	.0	7	.0	176	.8
53	1	.0	8	.0	159	.7
54			5	.0	57	.2
55					33	.1
56			5	.0	35	.2
57					16	.1
58			1	.0	10	.0
59			1	.0	11	.0
60					5	.0
61			1	.0	3	.0
62					1	.0
63					2	.0
64						
65					1	.0

TAPE: 10007
FILE: 4

SEGMENT: 1117 ID: EDAYHRMNS 161616350 LAT= 38: 9 N LONG= 97:49 W SUN ELEV: 47 SUN AZ: 135

STATISTICS

5 X 6 AREA

		BAND 1		BAND 2		BAND 3		BAND 4	
		5 X 6 AREA DATA	SUN ELEV CORR	5 X 6 AREA DATA	SUN ELEV CORR	5 X 6 AREA DATA	SUN ELEV CORR	5 X 6 AREA DATA	SUN ELEV CORR
MIN		20	23	15	17	14	16	4	4
MAX		53	62	61	72	65	76	34	40
RANGE		33	39	46	54	51	60	30	35
MEAN	P2=	31.2	37.0	30.3	35.9	39.3	46.6	20.4	24.1
STD DEVIATION	S2=	2.9	3.5	4.7	5.6	6.6	7.8	4.2	5.0
MEAN DEVIATION		2.2	2.6	3.7	4.4	5.5	6.5	3.5	4.1
MEDIAN		31	36	30	35	39	46	20	23
MODE		32	37	28	33	36	42	18	21

10 X 11 SEARCH AREA

		BAND 1	BAND 2	BAND 3	BAND 4
GAIN	A1=	13.4	8.3	6.6	10.6
SECOND BIAS	B1=	-21.7	-14.8	-20.0	-8.0
ARITHMETIC MEAN	P1=	31.2	30.2	39.4	20.1
STANDARD DEVIATION	S1=	3.2	5.1	6.5	4.0

59/65

TAPE: 10007
FILE: 4

SEGMENT: 1317 ID: EDAYHRMNS 161616350 LAT= 38: 9 N LONG= 97:49 W SUN ELEV: 47 SUN AZ: 135

5 X 6 AREA

PERCENT EXCEEDING SELECTED VALUES

	BAND 1	BAND 2	BAND 3	BAND 4
% > 60	.0	.0	.1	.0
% > 90	.0	.0	.0	.0
% > 60* (71)	.0	.0	.0	.0
% > 70* (83)	.0	.0	.0	.0
% > 80* (95)	.0	.0	.0	.0
% > 90* (107)	.0	.0	.0	.0

* = CORRECTED BRIGHTNESS
= BRIGHTNESS X SIN 69/SIN SUN ELEV

TAPE: .0007 EDAYHRMNS LAT= 38: 9 N
FILE: 4 SEGMENT: 1117 ID: 161616350 LONG= 97:49 W SUN ELEV: 47 SUN AZ: 135

PFC

FREQUENCY DISTRIBUTION

PFC LEVEL	BAND 1 FREQ	BAND 1 %	BAND 2 FREQ	BAND 2 %	BAND 3 FREQ	BAND 3 %	BAND 4 FREQ	BAND 4 %
1	5	.0	3	.0	67	.3	63	.3
2	39	.2	33	.1	80	.3	112	.5
3	147	.6	94	.4	523	2.3	175	.8
4	549	2.4	452	2.0	761	3.3	1083	4.7
5	820	3.6	1345	5.9	2778	12.1	1014	4.4
6	3106	13.5	2698	11.8	2262	9.9	3839	16.7
7	2402	10.5	4629	20.2	2136	9.3	2220	9.7
8	5592	24.4	3478	15.2	3009	13.1	4104	17.9
9	4471	19.5	4353	19.0	1920	8.4	1695	7.4
10	1358	5.9	2358	10.3	3471	15.1	2748	12.0
11	1817	7.9	1524	6.6	2717	11.8	1611	7.0
12	752	3.3	760	3.3	1313	5.7	2284	10.0
13	1189	5.2	138	.6	1386	6.0	814	3.5
14	282	1.2	512	2.2	335	1.5	823	3.6
15	170	.7	286	1.2	125	.5	205	.9
16	233	1.0	269	1.2	49	.2	142	.6

165

TAPE: 10007
FILE: 4 SEGMENT: 1117 ID: EDAYHRMNS 161616350 LAT= 38: 9 N LONG= 97:49 W SUN ELEV: 47 SUN AZ: 135

		AREA (10 X 11)	TRUNCATED (5 X 6)				MOD. STD DEV	AVERAGE	PERCENT
BAND 1			MIN= 20 MAX= 53	MIN= 4 MAX=120	MIN= 10 MAX= 80	MIN= 20 MAX= 60			
	GAIN	A1= 13.4	A2= 14.6	A3= 14.6	A4= 14.6	A5= 14.6	A6= 21.8	A7= 19.2	A8= 12.8	A9= 20.1	A10= 16.1
	BIAS	B1= -21.7	B2= -22.4	B3= -22.4	B4= -22.4	B5= -22.4	B6= -25.4	B7= -24.6	B8= -24.0	B9= -24.8	B10= -23.2
	MEAN	P1= 31.2	P2= 31.2	P3= 31.2	P4= 31.2	P5= 31.2					
	STD DEV	S1= 3.2	S2= 2.9	S3= 2.9	S4= 2.9	S5= 2.9					
BAND 2			MIN= 15 MAX= 61	MIN= 3 MAX=120	MIN= 10 MAX= 80	MIN= 20 MAX= 60			
	GAIN	A1= 8.3	A2= 9.0	A3= 9.0	A4= 9.0	A5= 9.1	A6= 13.5	A7= 11.6	A8= 7.8	A9= 12.4	A10= 10.0
	BIAS	B1= -14.8	B2= -16.1	B3= -16.1	B4= -16.1	B5= -16.2	B6= -20.8	B7= -19.3	B8= -18.0	B9= -20.0	B10= -17.4
	MEAN	P1= 30.2	P2= 30.3	P3= 30.3	P4= 30.3	P5= 30.3					
	STD DEV	S1= 5.1	S2= 4.7	S3= 4.7	S4= 4.7	S5= 4.7					
BAND 3			MIN= 14 MAX= 65	MIN= 5 MAX=120	MIN= 10 MAX= 80	MIN= 20 MAX= 60			
	GAIN	A1= 6.6	A2= 6.5	A3= 6.5	A4= 6.5	A5= 6.5	A6= 9.7	A7= 7.7	A8= 6.9	A9= 9.9	A10= 7.9
	BIAS	B1= -20.0	B2= -19.5	B3= -19.5	B4= -19.5	B5= -19.7	B6= -26.1	B7= -22.7	B8= -21.0	B9= -26.4	B10= -23.2
	MEAN	P1= 39.4	P2= 39.3	P3= 39.3	P4= 39.3	P5= 39.3					
	STD DEV	S1= 6.5	S2= 6.6	S3= 6.6	S4= 6.6	S5= 6.6					
BAND 4			MIN= 4 MAX= 34	MIN= 2 MAX= 61	MIN= 5 MAX= 40	MIN= 7 MAX= 30			
	GAIN	A1= 10.6	A2= 10.1	A3= 10.1	A4= 10.1	A5= 10.4	A6= 15.2	A7= 12.3	A8= 9.8	A9= 15.9	A10= 12.7
	BIAS	B1= -8.0	B2= -7.7	B3= -7.7	B4= -7.7	B5= -8.0	B6= -11.9	B7= -10.0	B8= -6.0	B9= -12.1	B10= -10.1
	MEAN	P1= 20.1	P2= 20.4	P3= 20.4	P4= 20.4	P5= 20.3					
	STD DEV	S1= 4.0	S2= 4.2	S3= 4.2	S4= 4.2	S5= 4.1					

TAPE: 10007
FILE: 4

SEGMENT: 1117 ID: EDAYHRMNS 161616350 LAT= 38: 9 N LONG= 97:49 W SUN ELEV: 47 SUN AZ: 135

BAND 1	GAIN	A11=	17.5	A12=	23.0	A13=	28.8	A14=	17.1	A15=	21.3	A16=	12.8	A17=	17.1	A18=	21.3
	BIAS	B11=	-23.9	B12=	-25.7	B13=	-26.8	B14=	-25.0	B15=	-26.0	B16=	-27.0	B17=	-27.0	B18=	-28.0
BAND 2	GAIN	A11=	10.8	A12=	13.9	A13=	17.4	A14=	10.2	A15=	12.8	A16=	7.8	A17=	10.2	A18=	12.8
	BIAS	B11=	-18.4	B12=	-21.1	B13=	-22.9	B14=	-21.3	B15=	-22.0	B16=	-24.0	B17=	-24.0	B18=	-24.0
BAND 3	GAIN	A11=	7.8	A12=	9.3	A13=	11.6	A14=	8.8	A15=	10.7	A16=	6.9	A17=	8.8	A18=	10.7
	BIAS	B11=	-22.8	B12=	-25.5	B13=	-28.3	B14=	-25.0	B15=	-27.0	B16=	-25.0	B17=	-26.0	B18=	-28.0
BAND 4	GAIN	A11=	12.2	A12=	14.8	A13=	18.4	A14=	13.5	A15=	16.0	A16=	9.8	A17=	13.5	A18=	16.0
	BIAS	B11=	-9.8	B12=	-11.7	B13=	-13.4	B14=	-11.0	B15=	-13.0	B16=	-14.0	B17=	-14.0	B18=	-15.0

		MAX(HI)/MIN(LO)		P1/S1	P2/S2
BANDS 1, 2, 2(4)	GAIN	A19=	5.1	A26= 4.2	A28= 4.0
	BIAS	B19=	-15.5	B26= -14.3	B28= -8.7
BANDS 2, 3, 2(4)	GAIN	A20=	5.1	A27= 4.6	A29= 4.4
	BIAS	B20=	-15.5	B27= -40.7	B29= -33.1

TAPE: 10007
FILE: 4

SEGMENT: 1117 ID: EDAYHRMNS 161616350 LAT= 38: 9 N LONG= 97:49 W SUN ELEV: 47 SUN AZ: 135

	TRUNCATED @ P2 +/- 3 S2	TRUNCATED @ P2(NEW) +/- 3 S2(NEW)
BAND 1 GAIN , BIAS	A21= 15.2 , B21= -22.7	A22= 15.2 , B22= -22.7
BAND 2 GAIN , BIAS	A21= 9.7 , B21= -16.9	A22= 9.8 , B22= -17.0
BAND 3 GAIN , BIAS	A21= 6.5 , B21= -19.7	A22= 6.5 , B22= -19.7
BAND 4 GAIN , BIAS	A21= 10.2 , B21= -7.9	A22= 10.2 , B22= -7.9

99/

TAPE: 10007
FILE: 4

SEGMENT: 1117 ID: EDAYHRMNS 161616350 LAT= 38: 9 N LONG= 97:49 W SUN ELEV: 47 SUN AZ: 135

BAND 1	MIN= 3 MAX= 68	CA= 8 CB= 16 (P1)	CA= 8 CB= 16 (P2)	
GAIN	A23= 14.6	A24= 8.0	A25= 8.0	
BIAS	B23= -22.4	B24=-121.7	B25=-121.8	
BAND 2	MIN= 3 MAX= 68	CA= 5 CB= 26 (P1)	CA= 5 CB= 26 (P2)	
GAIN	A23= 9.0	A24= 5.0	A25= 5.0	
BIAS	B23= -16.1	B24= -21.2	B25= -21.4	
BAND 3	MIN= 3 MAX= 68	CA= 5 CB= 32 (P1)	CA= 5 CB= 32 (P2)	
GAIN	A23= 6.5	A24= 5.0	A25= 5.0	
BIAS	B23= -19.5	B24= -36.8	B25= -36.6	
BAND 4	MIN= 2 MAX= 34	CA= 10 CB= 13 (P1)	CA= 10 CB= 13 (P2)	
GAIN	A23= 10.1	A24= 10.0	A25= 10.0	
BIAS	B23= -7.7	B24= -71.2	B25= -73.7	

69

SAMPLE OUTPUT: Goddard Tape, file 4 - INPUT SUN ANGLE = 60

```
INPUT IMAGE DATA TAPE INFORMATION:

  FORMAT                    UNIVERSAL
  NO. OF CHANNELS             4
  NO. OF PIXELS/LINE        196

                  HEADER :
                  ------

                  COMPUTING SYSTEM  ID          LACIP NDPF
                  LAST DIGIT OF YEAR            4
                  DAY NUMBER OF YEAR            317
                  DAILY TAPE SERIAL NO.           1
                      SENSOR ID                 ERTS MSS
                         DATE                   13/11/74
                  ERTS MISSION NUMBER             1
                  SITE SAMPLE SEG. NO.            1117
                  CLOUD COVER 0 PERCENT OF 1nx11 NM SEARCH AREA COVERED BY CLOUDS
                  FLAG INDICATING WHETHER A REFERENCE SCENE HAS BEEN USED FOR REGISTRATION----FLAG=0
                  (RTS SCENE/FRAME ID NUMBER FOR NEW DATA)
                   1  =ERTS MISSION NUMBER
                   616= DAY NUMBER RELATIVE TO LAUNCH AT TIME OF OBSERVATION
                   16 = HOUR AT TIME OF OBSERVATION
                   35 =MINUTE AT TIME OF OBSERVATION
                   0  = TENS OF SECONDS AT TIME OF OBSERVATION
                  DATA QUALITY CLASSIFICATION=0
                  CENTER OF SAMPLE SEGMENT

                   LATITUDE (GEODETIC)
                            NORTH
                   DEGREES              = 038
                   MINUTES              = 39

                   LONGITUDE (GEODETIC)
                            WEST
                   DEGREES              = 097
                   MINUTES              = 49
                  SUN ELEVATION  (DEGREES) 47
                  SUN AZIMUTH    (DEGREES) 135
                  BIAS FACTORS AND SCALING FACTORS-SIGNED BINARY
                   FOUR BYTES PER CHANNEL,WHERE FIRST TWO BYTES=BIAS FACTOR.
                   SECOND TWO BYTES=SCALING FACTOR.
                  CHANNEL 1 BIAS FACTOR=     -290.2
                            SCALING FACTOR=        13.4
                  CHANNEL 2 BIAS FACTOR=     -123.0
                            SCALING FACTOR=         8.3
                  CHANNEL 3 BIAS FACTOR=     -131.8
                            SCALING FACTOR=         6.6
                  CHANNEL 4 BIAS FACTOR=      -85.3
                            SCALING FACTOR=        10.6

FIRST SCAN LINE NO.        1      FIRST PIXEL REFERENCE PT.       1

FROM PFCGAR:
------------
FILE NO.     4    , NO. SCAN LINES READ =     117    , FOR IMAGE NO.     1
```

TAPE: 10007
FILE: 4 SEGMENT: 1117 ID: EDAYHRMMS 161616350 LAT= 38: 9 N LONG= 97:49 W SUN ELEV: 60 SUN AZ: 135

5 X 6 AREA

FREQUENCY DISTRIBUTION

PIXEL VALUE	BAND 1 FREQ	BAND 1 %	BAND 2 FREQ	BAND 2 %	BAND 3 FREQ	BAND 3 %	BAND 4 FREQ	BAND 4 %
4							1	.0
5							15	.1
6							18	.1
7							9	.0
8							8	.0
9							12	.1
10							34	.1
11							78	.3
12							175	.8
13							384	1.7
14					2	.0	699	3.0
15			2	.0	3	.0	1014	4.4
16			1	.0			1839	8.0
17			6	.0	3	.0	2000	8.7
18			27	.1	3	.0	2220	9.7
19			13	.1	7	.0	2144	9.3
20	2	.0	81	.4	6	.0	1960	8.5
21			167	.7	14	.1	1695	7.4
22	3	.0	285	1.2	29	.1	1526	6.7
23	6	.0	475	2.1	28	.1	1222	5.3
24	33	.1	870	3.8	52	.2	1611	7.0
25	147	.6	881	3.8	90	.4	1253	5.5
26	549	2.4	1817	7.9	146	.6	1031	4.5
27	820	3.6	1755	7.7	287	1.3	814	3.5
28	3106	13.5	2874	12.5	144	.6	528	2.3
29	2402	10.5	2189	9.5	617	2.7	295	1.3
30	1259	5.5	1289	5.6	704	3.1	205	.9
31	4333	18.9	1743	7.6	678	3.0	92	.4
32	4471	19.5	2610	11.4	1396	6.1	38	.2
33	1358	5.9	814	3.5	503	2.2	11	.0
34	1817	7.9	1544	6.7	1759	7.7	1	.0
35	752	3.3	544	2.4	351	1.5		
36	749	3.3	983	4.3	1785	7.8		
37	443	1.9	70	.3	692	3.0		
38	282	1.2	690	3.0	1316	5.7		
39	173	.7	138	.6	1001	4.4		
40	128	.6	289	1.3	1011	4.4		
41			223	1.0	909	4.0		
42	53	.2	146	.6	1351	5.9		

171

43	18	.1	140	.6	1397	6.1
44	4	.0			723	3.2
45	19	.1	135	.5	1657	7.2
46	2	.0	45	.2	1060	4.6
47	5	.0	50	.2	586	2.6
48	1	.0	12	.1	727	3.2
49			19	.1	637	2.8
50	1	.0	5	.0	480	2.1
51			5	.0	269	1.2
52	1	.0	7	.0	176	.8
53	1	.0	8	.0	159	.7
54			5	.0	57	.2
55					33	.1
56			5	.0	35	.2
57					16	.1
58			1	.0	10	.0
59			1	.0	11	.0
60					5	.0
61			1	.0	3	.0
62					1	.0
63					2	.0
64						
65					1	.0

172

TAPE: 10007
FILE: 4

SEGMENT: 1117 ID: EDAYHRMNS 161616350 LAT= 38: 9 N LONG= 97:49 W SUN ELEV: 60 SUN AZ: 135

STATISTICS

5 X 6 AREA

		BAND 1		BAND 2		BAND 3		BAND 4	
		5 X 6 AREA DATA	SUN ELEV CORR	5 X 6 AREA DATA	SUN ELEV CORR	5 X 6 AREA DATA	SUN ELEV CORR	5 X 6 AREA DATA	SUN ELEV CORR
MIN		20	20	15	15	14	14	4	4
MAX		53	53	61	61	65	65	34	34
RANGE		33	33	46	46	51	51	30	30
MEAN	P2=	31.2	31.2	30.3	30.3	39.3	39.3	20.4	20.4
STD DEVIATION	S2=	2.9	2.9	4.7	4.7	6.6	6.6	4.2	4.2
MEAN DEVIATION		2.2	2.2	3.7	3.7	5.5	5.5	3.5	3.5
MEDIAN		31	31	30	30	39	39	20	20
MODE		32	32	28	28	36	36	18	18

10 X 11 SEARCH AREA

		BAND 1	BAND 2	BAND 3	BAND 4
GAIN	A1=	23.4	13.3	16.6	20.6
SECOND BIAS	B1=	-31.7	-24.3	-30.3	-13.0
ARITHMETIC MEAN	P1=	37.2	33.9	37.7	19.2
STANDARD DEVIATION	S1=	1.8	3.2	2.6	2.1

173

TAPE: 10007 SEGMENT: 1117 ID: EDAYHRMNS 161616350 LAT= 38: 9 N LONG= 97:49 W SUN ELEV: 60 SUN AZ: 135
FILE: 4

5 X 6 AREA

PERCENT EXCEEDING SELECTED VALUES

	BAND 1	BAND 2	BAND 3	BAND 4
% > 60	.0	.0	.1	.0
% > 90	.0	.0	.0	.0
% > 60* (60)	.0	.0	.1	.0
% > 70* (70)	.0	.0	.0	.0
% > 80* (80)	.0	.0	.0	.0
% > 90* (90)	.0	.0	.0	.0

* = CORRECTED BRIGHTNESS
= BRIGHTNESS X SIN 60/SIN SUN ELEV

TAPE: 10007
FILE: 4

SEGMENT: 1117 ID: EDAYHRMNS 161616350 LAT= 38: 9 N LONG= 97:49 W SUN ELEV: 60 SUN AZ: 135

PFC

FREQUENCY DISTRIBUTION

PFC LEVEL	BAND 1		BAND 2		BAND 3		BAND 4	
	FREQ	%	FREQ	%	FREQ	%	FREQ	%
1	17131	74.7	2808	12.2	2135	9.3	734	3.2
2	1358	5.9	1817	7.9	678	3.0	699	3.0
3			1755	7.7	1396	6.1	1014	4.4
4	1817	7.9	5063	22.1	503	2.2	1839	8.0
5	752	3.3	1289	5.6	1759	7.7		
6			1743	7.6	351	1.5	2000	8.7
7	749	3.3	2610	11.4	1785	7.8	2220	9.7
8	440	1.9	814	3.5	692	3.0	2144	9.3
9			2388	9.1	1316	5.7		
10	282	1.2	980	4.3	1001	4.4	1960	8.5
11	170	.7	70	.3	1011	4.4	1695	7.4
12			690	3.0	909	4.0	1526	6.7
13	128	.6	138	.6	1351	5.9	1222	5.3
14			512	2.2	1397	6.1		
15			146	.6	723	3.2	1611	7.0
16	105	.5	409	1.8	5925	25.8	4268	18.6

125

TAPE: 10007
FILE: 4 SEGMENT: 1117 ID: EDAYHRMNS 161616350 LAT= 38: 9 N LONG= 97:49 W SUN ELEV: 60 SUN AZ: 135

		AREA (10 X 11)	TRUNCATED (5 X 6)				MOD. STD DEV	AVERAGE	PERCENT
BAND 1			MIN= 20 MAX= 53	MIN= 4 MAX=120	MIN= 10 MAX= 80	MIN= 20 MAX= 60			
	GAIN	A1= 23.4	A2= 14.6	A3= 14.6	A4= 14.6	A5= 14.6	A6= 21.8	A7= 19.2	A8= 12.8	A9= 35.1	A10= 28.1
	BIAS	B1= -31.7	B2= -22.4	B3= -22.4	B4= -22.4	B5= -22.4	B6= -25.4	B7= -24.6	B8= -24.0	B9= -33.5	B10= -32.6
	MEAN	P1= 37.2	P2= 31.2	P3= 31.2	P4= 31.2	P5= 31.2					
	STD DEV	S1= 1.8	S2= 2.9	S3= 2.9	S4= 2.9	S5= 2.9					
BAND 2			MIN= 15 MAX= 61	MIN= 3 MAX=120	MIN= 10 MAX= 80	MIN= 20 MAX= 60			
	GAIN	A1= 13.3	A2= 9.0	A3= 9.0	A4= 9.0	A5= 9.1	A6= 13.5	A7= 11.6	A8= 7.8	A9= 19.9	A10= 16.0
	BIAS	B1= -24.3	B2= -16.1	B3= -16.1	B4= -16.1	B5= -16.2	B6= -20.8	B7= -19.3	B8= -18.0	B9= -27.5	B10= -25.9
	MEAN	P1= 33.9	P2= 30.3	P3= 30.3	P4= 30.3	P5= 30.3					
	STD DEV	S1= 3.2	S2= 4.7	S3= 4.7	S4= 4.7	S5= 4.7					
BAND 3			MIN= 14 MAX= 65	MIN= 5 MAX=120	MIN= 10 MAX= 80	MIN= 20 MAX= 60			
	GAIN	A1= 16.6	A2= 6.5	A3= 6.5	A4= 6.5	A5= 6.5	A6= 9.7	A7= 7.7	A8= 6.9	A9= 24.9	A10= 19.9
	BIAS	B1= -30.0	B2= -19.5	B3= -19.5	B4= -19.5	B5= -19.7	B6= -26.1	B7= -22.7	B8= -21.0	B9= -32.6	B10= -31.3
	MEAN	P1= 37.7	P2= 39.3	P3= 39.3	P4= 39.3	P5= 39.3					
	STD DEV	S1= 2.6	S2= 6.6	S3= 6.6	S4= 6.6	S5= 6.6					
BAND 4			MIN= 4 MAX= 34	MIN= 2 MAX= 61	MIN= 5 MAX= 40	MIN= 7 MAX= 30			
	GAIN	A1= 20.6	A2= 10.1	A3= 10.1	A4= 10.1	A5= 10.4	A6= 15.2	A7= 12.3	A8= 9.6	A9= 30.9	A10= 24.7
	BIAS	B1= -13.0	B2= -7.7	B3= -7.7	B4= -7.7	B5= -8.0	B6= -11.9	B7= -10.0	B8= -6.0	B9= -15.1	B10= -14.0
	MEAN	P1= 19.2	P2= 20.4	P3= 20.4	P4= 20.4	P5= 20.3					
	STD DEV	S1= 2.1	S2= 4.2	S3= 4.2	S4= 4.2	S5= 4.1					

ORIGINAL PAGE IS OF POOR QUALITY

TAPE: 10007
FILE: 4

SEGMENT: 1117 EDAYHRMNS ID: 161616350

LAT= 38: 9 N
LONG= 97:49 W

SUN ELEV: 60 SUN AZ: 135

BAND 1	GAIN	A11=	17.5	A12=	23.0	A13=	28.8	A14=	17.1	A15=	21.3	A16=	12.8	A17=	17.1	A18=	21.3
	BIAS	B11=	-23.9	B12=	-25.7	B13=	-26.8	B14=	-25.0	B15=	-26.0	B16=	-27.0	B17=	-27.0	B18=	-28.0
BAND 2	GAIN	A11=	10.8	A12=	13.9	A13=	17.8	A14=	10.2	A15=	12.8	A16=	7.8	A17=	10.2	A18=	12.8
	BIAS	B11=	-18.4	B12=	-21.1	B13=	-22.9	B14=	-21.0	B15=	-22.0	B16=	-24.0	B17=	-24.0	B18=	-24.0
BAND 3	GAIN	A11=	7.8	A12=	9.3	A13=	11.6	A14=	8.6	A15=	10.7	A16=	6.9	A17=	8.8	A18=	10.7
	BIAS	B11=	-22.8	B12=	-25.5	B13=	-28.3	B14=	-25.0	B15=	-27.0	B16=	-25.0	B17=	-26.0	B18=	-28.0
BAND 4	GAIN	A11=	12.2	A12=	14.8	A13=	18.4	A14=	13.5	A15=	16.0	A16=	9.8	A17=	13.5	A18=	16.0
	BIAS	B11=	-9.8	B12=	-11.7	B13=	-13.4	B14=	-11.0	B15=	-13.0	B16=	-14.0	B17=	-14.0	B18=	-15.0

		MAX(HI)/MIN(LO)	P1/S1	P2/S2
BANDS 1, 2, 2(4)	GAIN	A19= 5.1	A26= 8.9	A28= 4.0
	BIAS	B19= -15.5	B26=-197.7	B28= -8.7
BANDS 2, 3, 2(4)	GAIN	A20= 5.1	A27= 9.0	A29= 4.4
	BIAS	B20= -15.5	B27=-203.5	B29= -33.1

177

TAPE: 10007
FILE: 4

SEGMENT: 1117 ID: EDAYHRMNS 161616350 LAT= 36: 9 N LONG= 97:49 W SUN ELEV: 60 SUN AZ: 135

	TRUNCATED @ P2 +/- 3 S2	TRUNCATED @ P2(NEW) +/- 3.S2(NEW)
BAND 1 GAIN , BIAS	A21= 15.2 , B21= -22.7	A22= 15.2 , B22= -22.7
BAND 2 GAIN , BIAS	A21= 9.7 , B21= -16.9	A22= 9.8 , B22= -17.0
BAND 3 GAIN , BIAS	A21= 6.5 , B21= -19.7	A22= 6.5 , B22= -19.7
BAND 4 GAIN , BIAS	A21= 10.2 , B21= -7.9	A22= 10.2 , B22= -7.9

178

TAPE: 10007
FILE: 4

SEGMENT: 1117 ID: EDAYHRMNS 161616350

LAT= 38: 9 N
LONG= 97:49 W

SUN ELEV: 60 SUN AZ: 135

BAND 1	MIN= 4 MAX= 80	CA= 8 CB= 16 (P1)	CA= 8 CB= 16 (P2)	
GAIN	A23= 14.6	A24= 8.0	A25= 8.0	
BIAS	B23= -22.4	B24=-169.4	B25=-121.8	
BAND 2	MIN= 4 MAX= 80	CA= 5 CB= 26 (P1)	CA= 5 CB= 26 (P2)	
GAIN	A23= 9.0	A24= 5.0	A25= 5.0	
BIAS	B23= -16.1	B24= -39.6	B25= -21.4	
BAND 3	MIN= 4 MAX= 80	CA= 5 CB= 32 (P1)	CA= 5 CB= 32 (P2)	
GAIN	A23= 6.5	A24= 5.0	A25= 5.0	
BIAS	B23= -19.5	B24= -28.6	B25= -36.6	
BAND 4	MIN= 2 MAX= 40	CA= 10 CB= 13 (P1)	CA= 10 CB= 13 (P2)	
GAIN	A23= 10.1	A24= 10.0	A25= 10.0	
BIAS	B23= -7.7	B24= -62.1	B25= -73.7	

179