NASA Contractor Report 159846

Engine Bleed Air Reduction in DC-10 Aircraft

W. H. Newman and
M. R. Viele

McDonnell Douglas Corporation
Douglas Aircraft Company
Long Beach, California 90846

CONTRACT NAS3-21763
SEPTEMBER 1980

National Aeronautics and
Space Administration

Lewis Research Center
Cleveland, Ohio 44135

FOREWORD

The work was performed by the Douglas Aircraft Company, Long Beach, California, for the National Aeronautics and Space Administration, Lewis Research Center, Cleveland, Ohio. This report was prepared by M. R. Viele, Project Engineer, under the direction of Project Manager, W. H. Newman. The NASA Project Engineer for this program was F. J. Hrach. The program was initiated in September 1978 and was completed in September 1980.

TABLE OF CONTENTS

SECTION PAGE

LIST OF ILLUSTRATIONS

PRECEDING PAGE BLANK NOT FILMED

LIST OF TABLES

TABLES PAGE

SECTION 1

SUMMARY

Bleed air extracted from the engine compressors and then used for cabin conditioning is normally exhausted overboard. Loss of this air from the engine cycle increases engine fuel consumption. A significant fuel savings can be achieved by reducing the amount of bleed air used for air conditioning. Air in the cabin can be recirculated to maintain a comfortable ventilation rate, but the quality of the air tends to decrease due to entrainment of smoke and odors. The maximum limit of recirculation for many aircraft, while still maintaining a comfortable cabin, is not known. A development system was designed and fabricated under the NASA Engine Component Improvement Program to define this limit for the DC-10. With the system, a wide range of recirculation rates are possible.

The system was installed on an American Airlines DC-10. It was evaluated in revenue service during which the amount of recirculation was varied to define the optimum operating point. Results indicate that the cabin remains comfortable with a reduction in engine bleed air extraction of as much as 50 percent, corresponding to a predicted fuel savings of 0.8 percent. The contributions of various elements that affect the savings are presented. These include ram air cooling, thrust recovery from exhausting the cabin air overboard in an aft direction, system weight, and electrical power requirements. Flight test results which verify the analytical predictions also are presented.

An economic assessment of incorporating the recirculation system is included in the report. It shows that the system is cost effective; at today's fuel prices a pay back period as low as 1.3 years was calculated. The increase in maintenance costs imposed by the recirculation system is more than offset by the reduction in engine maintenance resulting from a decrease in turbine inlet temperature when the bleed flow is reduced.

SECTION 2

INTRODUCTION

National energy demand has outpaced domestic supply, thus creating an increased U.S. dependence on foreign oil. This increased dependence was dramatized by the OPEC oil embargo in the winter of 1973 to 1974. In addition, the embargo triggered a rapid rise in the cost of fuel which, along with the potential of further increases, brought about a changing economic circumstance with regard to the use of energy. These events, of course, were felt in the air transportation industry as well as other forms of transportation. As a result, the Government, with the support of the aviation industry, initiated programs aimed at both the supply and demand aspects of the problem. The supply problem is being investigated by looking at increasing fuel availability from such sources as coal and oil shale. Efforts are currently under way to develop engine combustor and fuel systems that will accept fuels with broader specifications.

Reduced fuel consumption is the other approach dealing with the overall problem. Accordingly, NASA sponsored the Aircraft Energy Efficient (ACEE) program, based on a congressional request, which is directed at reducing fuel consumption of commercial transports. The propulsion part of the ACEE program has a long range effort to reduce consumption by developing new technology which will result in a more energy efficient turbofan, or the use of a different propulsive cycle such as a turboprop. Although studies have indicated large reductions in fuel usage are possible (e.g., 15 to 40 percent), the impact of this approach in any significant way would be 15 or more years away. In the near term, the only practical propulsion approach is to improve the fuel efficiency of current engines. Examination of this approach has indicated that a 5 percent fuel reduction goal to be reached in the 1980 to 1982 time period is feasible for the General Electric CF6 and Pratt & Whitney JT8D and JT9D engines. These engines are, and will continue to be, significant fuel users for the next 15 to 20 years.

PAGE 2 INTENTIONALLY BLANK

The Engine Component Improvement (ECI) program, which is the near term element of the ACEE program, is directed at the fuel efficiency of these current engines. The ECI program consists of two parts: engine diagnostics and performance improvement. The engine diagnostics effort is to provide information to identify the sources and causes of engine deterioration. The performance improvement effort is directed at developing engine components having improved performance and performance retention for new production engines and for retrofit. The initial effort consisted of feasibility analyses conducted by General Electric and Pratt & Whitney in cooperation with the Boeing and Douglas aircraft companies and American and United Airlines. The study consisted of:

- The identification of engine and component modifications which exhibited a fuel savings potential in CF6, JT8D and JT9D engines
- The technical and economic assessment of the modifications, including airline acceptability, the probability of introduction into production in the 1980 to 1982 time period, and retrofit potential
- The assessment of fuel savings for the Douglas and Boeing aircraft which use these engines
- The selection of the most promising concepts and the preparation of Technology Development Plans for their development and evaluation.

The results of the feasibility analyses are reported in References 1 and 2.

One of the fuel saving concepts selected by NASA for further development and evaluation was the engine bleed air reduction on DC-10 aircraft. In this concept, the reduced airflow from the engine into the cabin is supplemented by recirculated and filtered cabin air to maintain a comfortable ventilation rate. This report presents the results of the development and evaluation efforts on the program.

On existing DC-10 models, fresh air from the engine bleed air system is delivered to the occupied compartments. The objectives of the NASA sponsored program were to design, fabricate, test, and conduct an in-service evaluation of a prototype cabin recirculation system for the DC-10 which would permit a significant reduction in engine bleed air. This evaluation was conducted by American Airlines, in conjunction with Douglas, on an American Airlines DC-10 in commercial service. The system was designed with sufficient flexibility to optimize fuel saving by determining the best balance among the following factors: the amount of engine bleed air (fresh air supply), the amount of recirculated cabin air, the use of air filtration methods, and the degree of passenger comfort. In addition, the impact on aircraft maintenance was assessed. The increased maintenance for the recirculation system and the decreased engine maintenance were estimated. (Reduced engine bleed flow results in a lower exhaust gas temperature (EGT) which in turn reduces engine maintenance.)

It is expected that the data and service experience gained from the program relative to fuel saving and reduced engine maintenance will be directly applicable to the future design of fuel efficient aircraft air conditioning systems.

SECTION 3
DESIGN

3.1 EXISTING SYSTEMS

The systems described herein are installed on DC-10 models (Series 10) which are currently in service with American Airlines (Figure 1). There are basically three systems on the DC-10 which are affected by the installation of the prototype recirculation system. They are the pneumatic supply, air conditioning, and conditioned air distribution systems.

Pneumatic Supply

This system is illustrated in Figure 2. It includes the ducting, components, and associated controls required to deliver engine bleed air to the using systems. They include air conditioning, wing ice protection, crossfeed engine starting, and various other aircraft systems requiring pneumatic pressure, flow, or heat. In flight, pneumatic air is supplied by the aircraft engines. On the ground, air can be supplied from the engines, the onboard auxillary power unit (APU), or a ground based pneumatic source. During normal in-flight operation, bleed air extracted from the engine low pressure port (8th stage compressor bleed) flows through the check valve to the pressure regulator which limits the downstream air pressure. The air then passes through the overpressure shutoff valve and into the precooler where it is cooled by a controlled flow of engine fan air. The overpressure valve provides protection for the pneumatic system should the pressure regulator fail in the open position. Whenever the pressure from the low pressure engine port is insufficient to meet the system demands, the high pressure bleed valve opens, which in turn closes the low-stage check valve, and supplies high stage bleed air (16th stage compressor bleed) to the systems.

FIGURE 1. DC-10 SERIES 10 AIRPLANE

ORIGINAL PAGE IS
OF POOR QUALITY

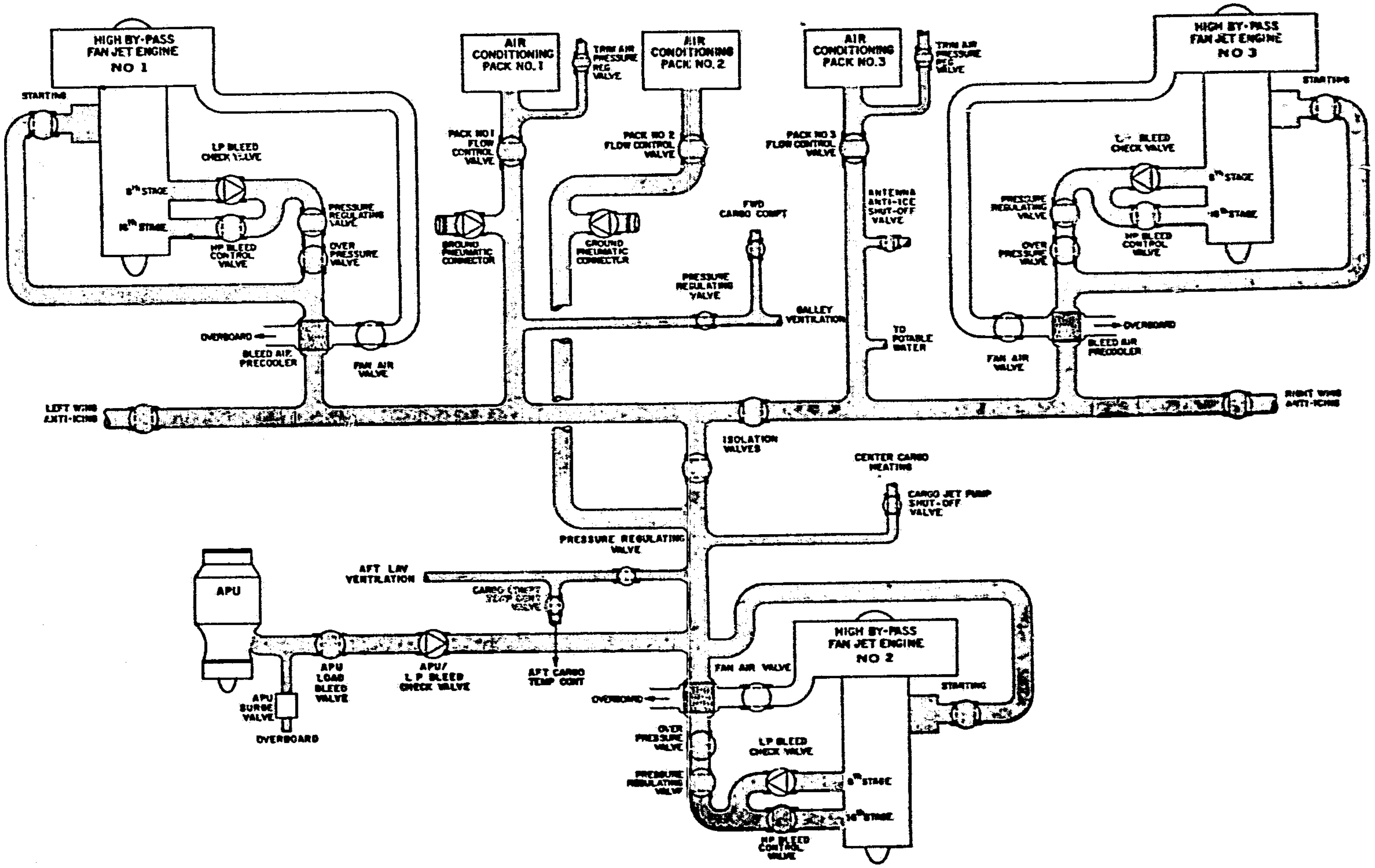

FIGURE 2. PNEUMATIC SUPPLY SYSTEM

In normal flight operation, the two isolation valves are closed. In this mode, the No. 1 air conditioning pack receives all of its air from the No. 1 engine. In like manner, packs No. 2 and 3 are isolated to the No. 2 and 3 engines. Proper manipulation of the isolation valves permits unrestricted dispatch over a wide range of air conditioning and pneumatic manifold system inoperative modes.

Air Conditioning

The DC-10 air conditioning system is operated by bleed air from the pneumatic supply system. The air conditioning system provides heating, cooling, and ventilation for the occupied compartments. The air conditioning and distribution system is shown schematically in Figure 3. Air from the pneumatic supply system flows through the flow control valves into the air conditioning air cycle packs, which reduces the air temperature, and is then distributed to the occupied compartments.

All three packs are controlled to the lowest supply air temperature required by any of the cabin zones, the cockpit, or the lower galley. Hot air, bypassed around packs No. 1 and 3 and then manifolded together, acts as a source of trim air for zone temperature control. Air from the manifold is added, as required, to raise the supply air temperature for each zone to its required level. The amount of hot air added to each zone depends on the relative heating or cooling loads in the zone.

As mentioned above, high temperature air from the pneumatic system is cooled by the air cycle packs. A diagram of one of the packs is presented in Figure 4. The flow control valve modulates to limit the air flow rate to approximately 57 m^3/min (2000 cfm). Individual ON-OFF switches for the three valves are located on the Flight Engineer's panel. During normal cruise operation at high altitude, air is cooled primarily by ram air flowing through the heat exchanger. Air enters the pack through the flow control valve and

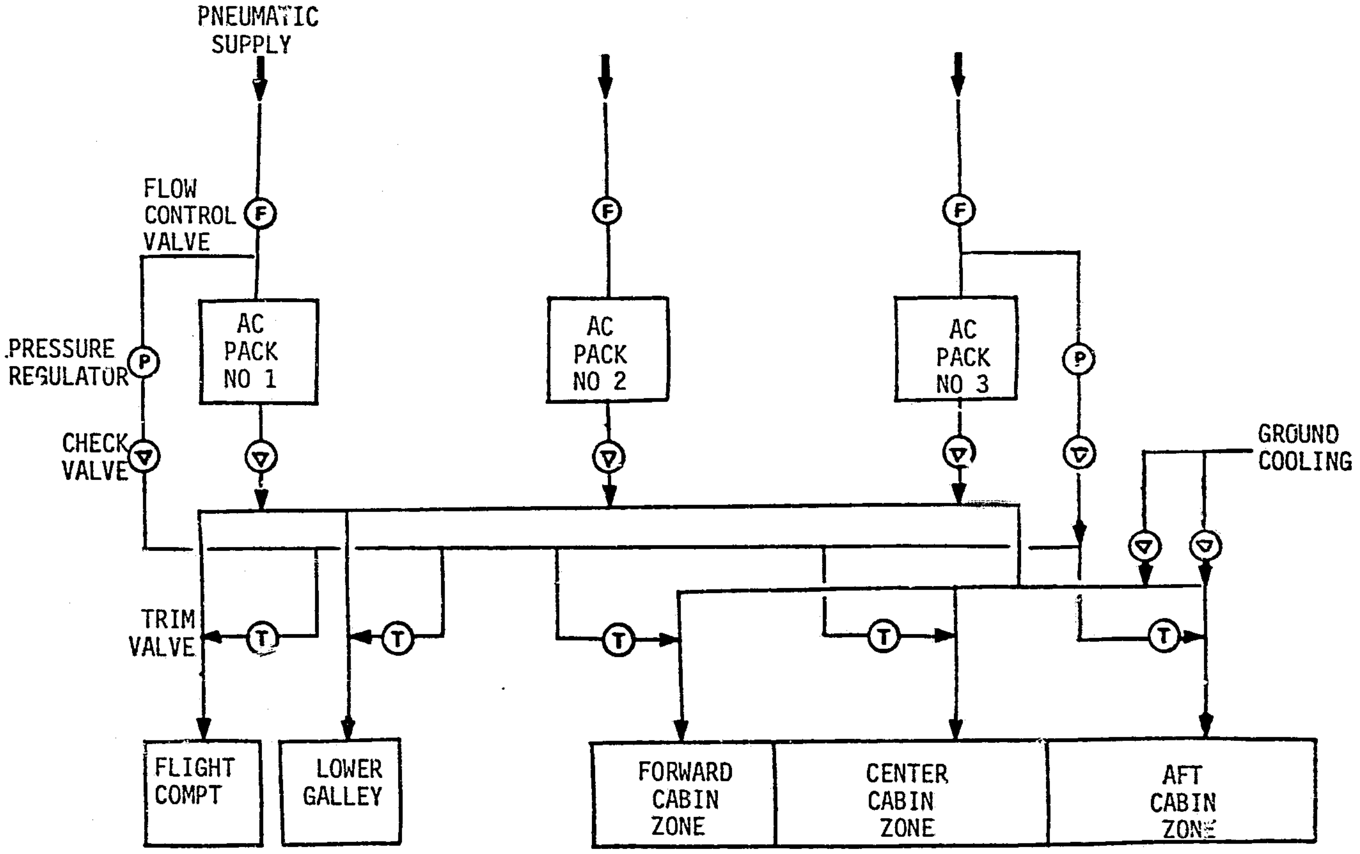

FIGURE 3. AIR CONDITIONING AND DISTRIBUTION SYSTEM

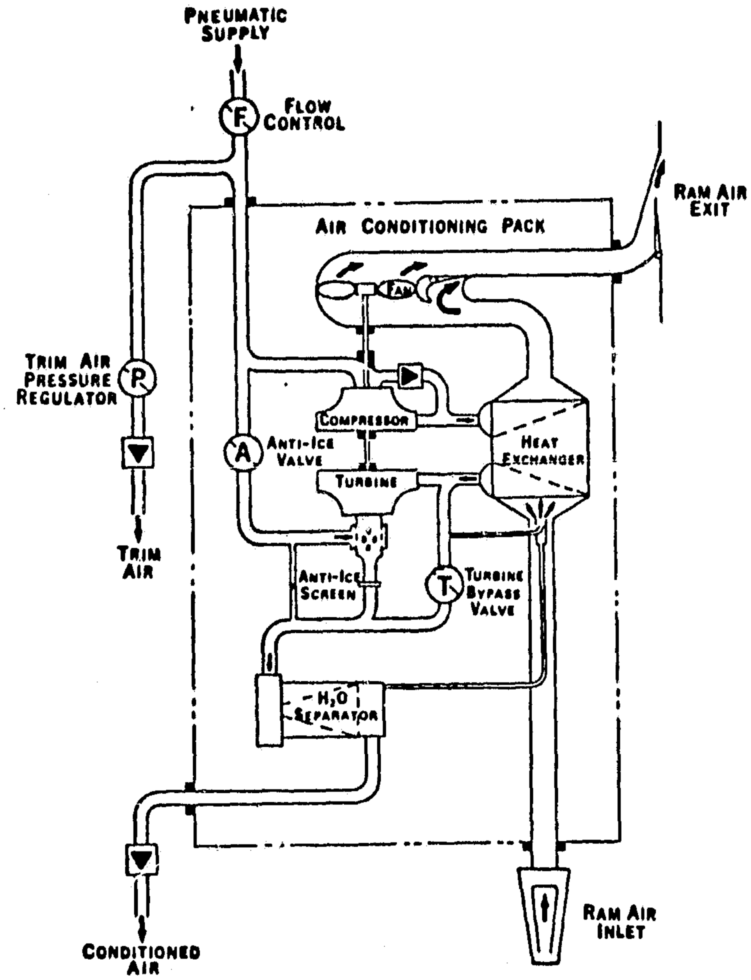

FIGURE 4. AIR CONDITIONING AIR CYCLE PACK

divides, approximately half passing through the check valve and half through the compressor. The mixture then flows through the heat exchanger and divides again with approximately three fourths flowing through the turbine bypass valve and the remainder through the cooling turbine. The recombined air then passes into the conditioned air supply ducts. For this condition, the air cycle machine is idling with little or no energy expended in the cooling turbine.

As the airplane descends into a warmer environment, the cooling requirements increase while the heat exchanger cooling capacity decreases. Increased pack cooling is provided by modulation of the ram air inlet and exit doors toward the open position and modulation of turbine bypass valve toward the closed position. This increases the amount of cooling air flowing through the heat exchanger and the amount of bleed air expanding through the cooling turbine. Both effects lower the temperature of the air leaving the pack.

As more cooling is required, the turbine bypass valve continues to close and the heat exchanger ram air inlet and exit doors open further. Finally, in the full cooling mode, the turbine bypass valve is fully closed, the ram air inlet and exit doors are fully open, and all of the bleed air is expanded and cooled through the turbine. The turbine, in addition to driving the compressor, powers the fan that forces ambient cooling air through the heat exchanger during ground operation, and assists ram air flow during flight.

Frequently, cooling by the turbine reduces the temperature of the air below the dewpoint and water droplets form. In order to enhance cooling capacity, the liquid condensate is removed by the water separator and sprayed into the ram air as it enters the heat exchanger. Freezing of the water is prevented by routing air from the compressor inlet through an anti-ice valve to the turbine discharge in sufficient quantity to maintain the temperature above freezing at the water separator, or above the dewpoint if the dewpoint temperature is below freezing.

Conditioned Air Distribution

Figure 5 presents a plan view of the DC-10 cockpit and forward cabin conditioned air distribution system. The air conditioning packs are located in two compartments under the cabin floor on either side of the nose wheel well. The hot trim air discussed in the previous section is mixed with cooled air just downstream of the air conditioning packs. The temperature controlled air is then routed to each compartment through individual ducts. The ducts leading to the passenger compartments and the cockpit are routed up the side of the fuselage and above the ceiling. The duct leading to the galley is below the floor.

The air circulation patterns within the cabin are shown in Figure 6. Conditioned air is introduced into the cabin from slots located alongside the light troughs which run the length of the ceiling. These inlets are designed to entrain cabin air with the incoming fresh air to provide large flows at low velocities to maintain uniform temperature without drafts. The circulation patterns are such that air is generally rising wherever people are seated and descending in the aisles and in a thin layer along the wall. The rising air around the passengers is effective in dispersing tobacco smoke and odors. Air exhausts from the cabin through grills at the lower edge of the sidewalls and passes below the floor to the thrust recovery outflow valve. For cabin pressure differentials at normal cruise altitudes, cabin air exhausts from the outflow valve at supersonic velocities, thus providing additional aircraft thrust. The outflow valve, also called the thrust recovery nozzle, is located on the left side of the airplane forward of the wing.

Odor control in the lavatories is provided by ejectors using a small amount of high pressure air from the pneumatic system for the primary jet. In this way, odors are exhausted below the floor at any time pneumatic pressure is available. In addition, inlets for conditioned air, adjustable in both flow and direction, are located in each lavatory.

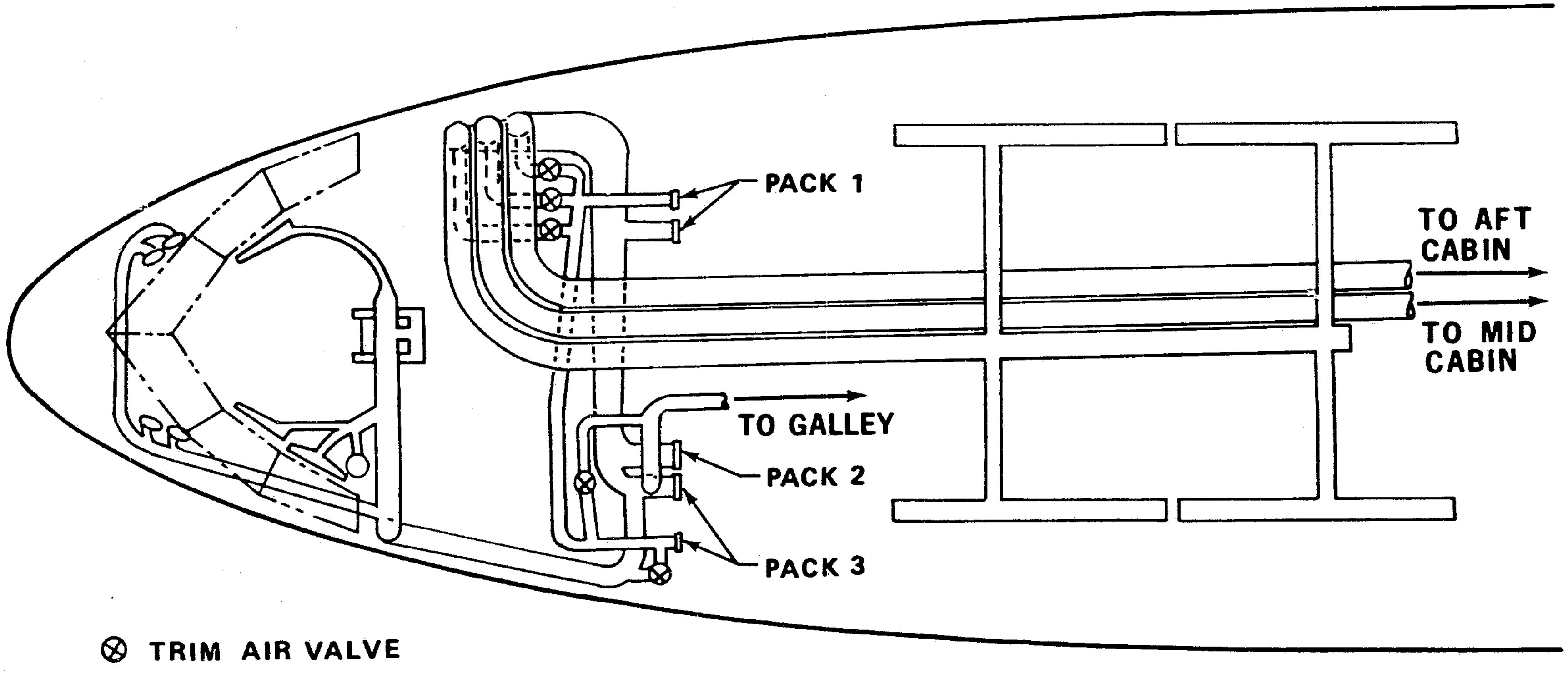

FIGURE 5. CONDITIONED AIR DISTRIBUTION SYSTEM

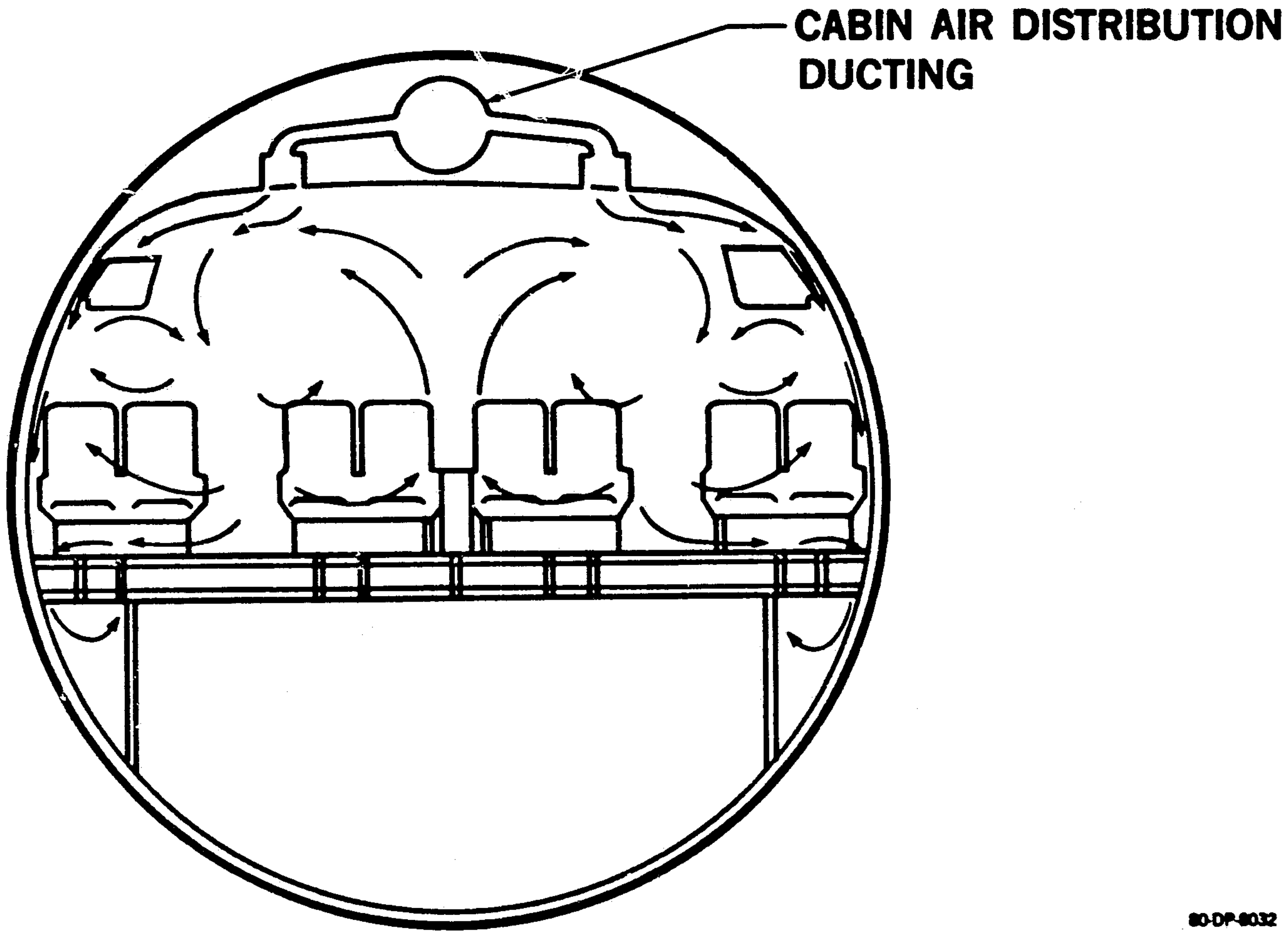

FIGURE 6. CABIN AIR CIRCULATION PATTERNS

Various conditioned air inlets are installed in the cockpit as shown in Figure 7. All are adjustable in flow and some in direction, permitting the crew to select conditions best suited to their needs. Exhaust air paths from the cockpit route the air over the instrument cases, behind switch panels, along wire runs, and behind circuit panels. In this way, the instruments are in a controlled environment, and smoke and odors are routed away from the crew.

As illustrated in Figure 8, the lower galley is provided with a continuous flow of fresh air delivered from a distribution manifold above the refrigerated modules. Air exhaust from the galley, as from the lavatories, is by means of an ejector using air from the pneumatic system for the primary jet. This system draws air from around the ovens and food containers to remove heat and to control the odors. The system also draws air from just above the floor at the forward and aft ends of the galley.

The fresh air ventilation rates for the occupied compartments, along with times to complete one air change, are listed in Table 1.

3.2 RECIRCULATION SYSTEM

A schematic diagram of the cabin air recirculation system, along with the current air conditioning and distribution system, is presented in Figure 9. Heavy lines identify additional or modified components. The recirculation system consists of three sets of filters, fans, and check valves, along with interconnecting ducts, installed above the cabin ceiling. When in operation, the system draws cabin air up through slots between the center ceiling panels into the area above the ceiling. The air is then drawn through the filters by the fans and discharged through check valves into a common manifold. From the common manifold, the recirculation air is ducted, in correct proportions, to the three main distribution ducts where it mixes with fresh air from the air cycle packs. This mixture of fresh and recirculated air is then discharged

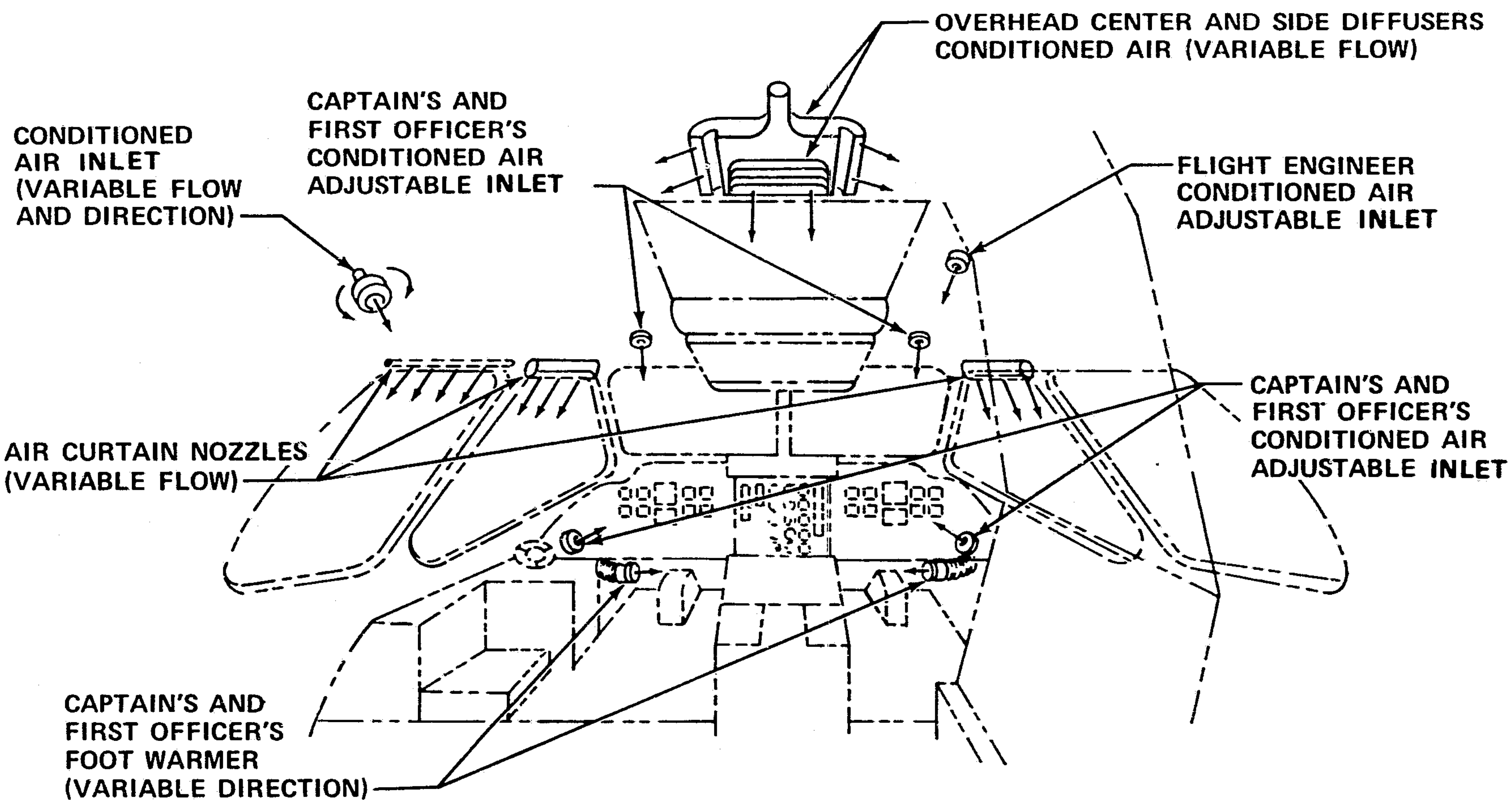

FIGURE 7. COCKPIT CONDITIONED AIR INLETS

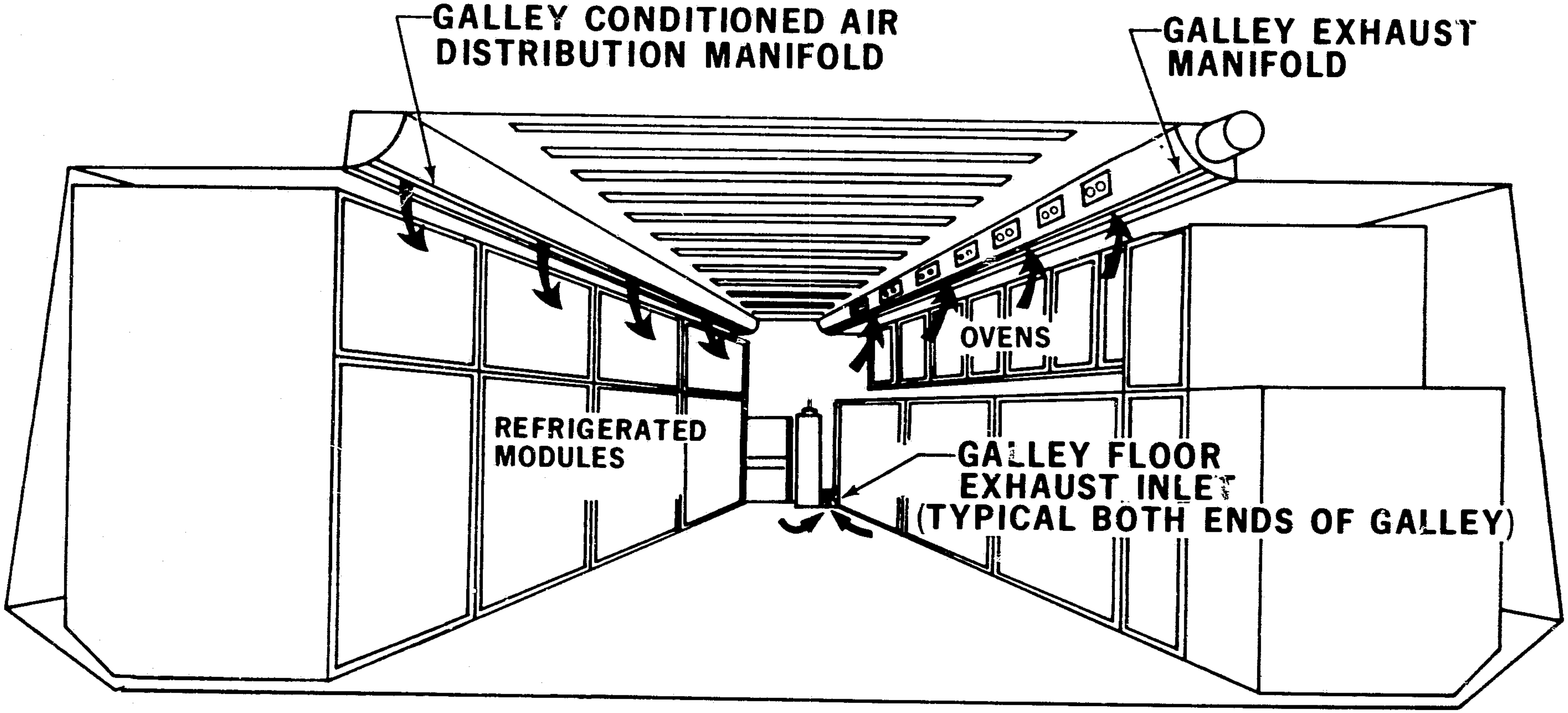

VIEW LOOKING FWD

FIGURE 8. LOWER GALLEY AIR CIRCULATION

Table 1. FRESH AIR VENTILATION RATES

	VOLUME FLOW	TIME FOR ONE COMPLETE AIR CHANGE
CABIN	142 m^3/min (5000 cfm)	3 min
COCKPIT	15 m^3/min (525 cfm)	1 min
LOWER GALLEY	11 m^3/min (380 cfm)	2 min
TOTAL FRESH AIR VENTILATION RATE	168 m^3/min (5905 cfm)	

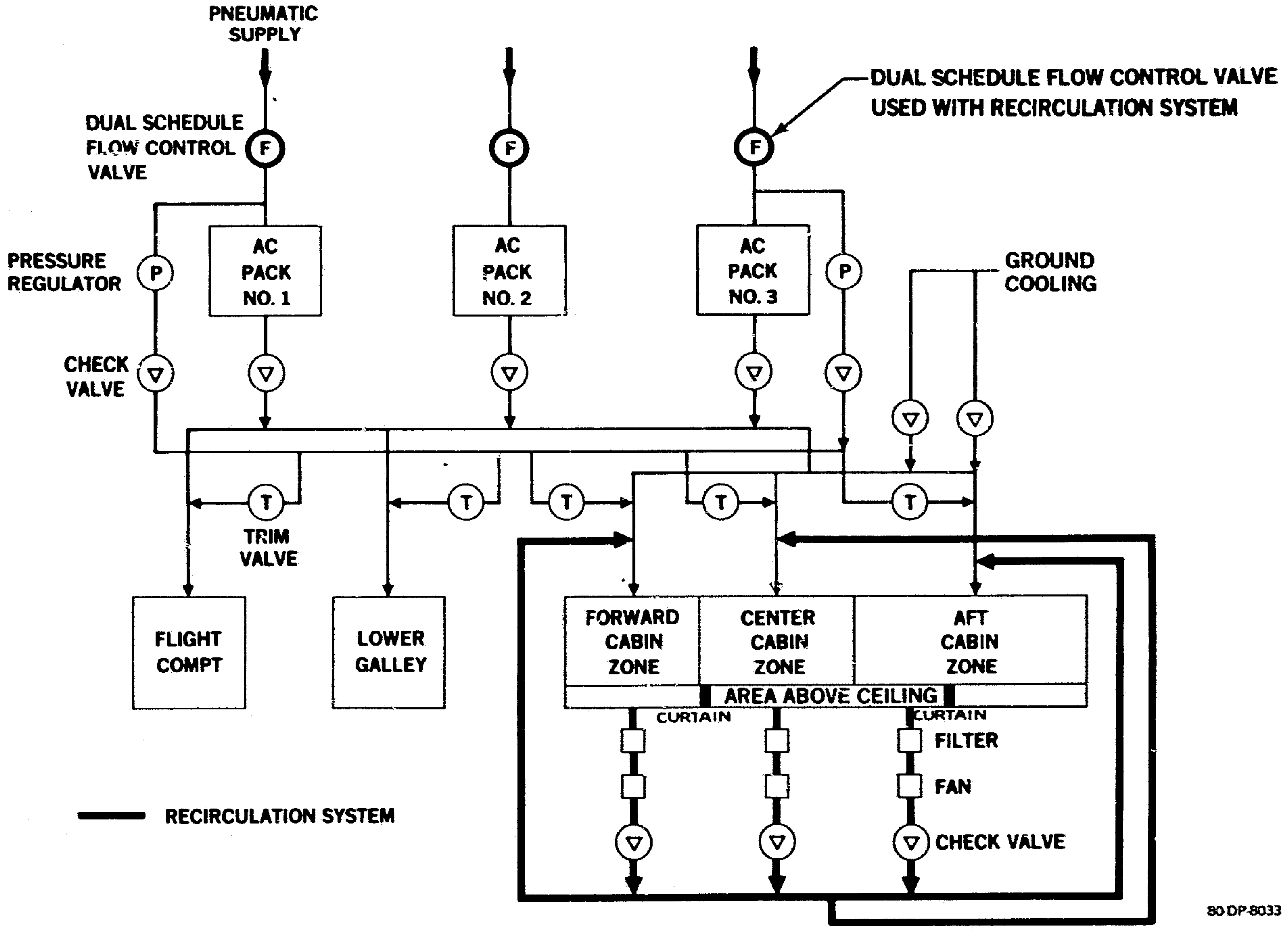

FIGURE 9. AIR CONDITIONING AND DISTRIBUTION SYSTEM (WITH CABIN AIR RECIRCULATION)

into the cabin as before, through the slots in the overhead light troughs. The slots through which recirculated air is drawn into the area above the ceiling can be seen in Figure 10. Because they are located in the recessed panel joints, the slots cannot be seen from a normal viewing angle, as Figure 11 illustrates. The air circulation patterns, as modified by recirculation, are shown in Figure 12.

A moisture problem in the passenger cabin has been reported on some DC-10 aircraft currently in airline service. Investigations have revealed that in a high passenger density configuration, during long, high altitude flights, moisture given off by the passengers is migrating to, and forming as frost on cold structures, particularly door support structures, above the cabin ceiling. Special attention to the problem of moisture was given to an aircraft with recirculation. With fresh air reduced by 50 percent, the relative humidity nearly doubles. Corrective action was taken by adding insulation, improved vapor seals, and curtains which are installed above the cabin ceiling just aft of the No. 2 doors and just forward of the No. 4 doors (Figure 9). The purpose of the curtains is to confine the flow of recirculated air, with its relatively high moisture content, to the attic areas above the mid and aft sections and away from the No. 2 and 4 door areas. The No. 2 doors are located just aft of the First Class compartment and the No. 4 doors are located in the aft end of the aft cabin zone. (There have been no condensation problems reported from the service evaluation aircraft as a result of the cabin air recirculation installation.)

The amount of recirculated air to each cabin zone is controlled by orifices installed in the branch ducts leading to the three main distribution ducts. The split of recirculated air flow among the zones is relatively constant whether one, two, or three fans are operating. The fans are independently controlled which permits the flight crew of the service evaluation aircraft to select total recirculation flow rates of approximately 30 m^3/min (1000 cfm), 56 m^3/min (2000 cfm), or 78 m^3/min (2800 cfm) corresponding to 1, 2, or 3 fans in operation. The flow of fresh air from the

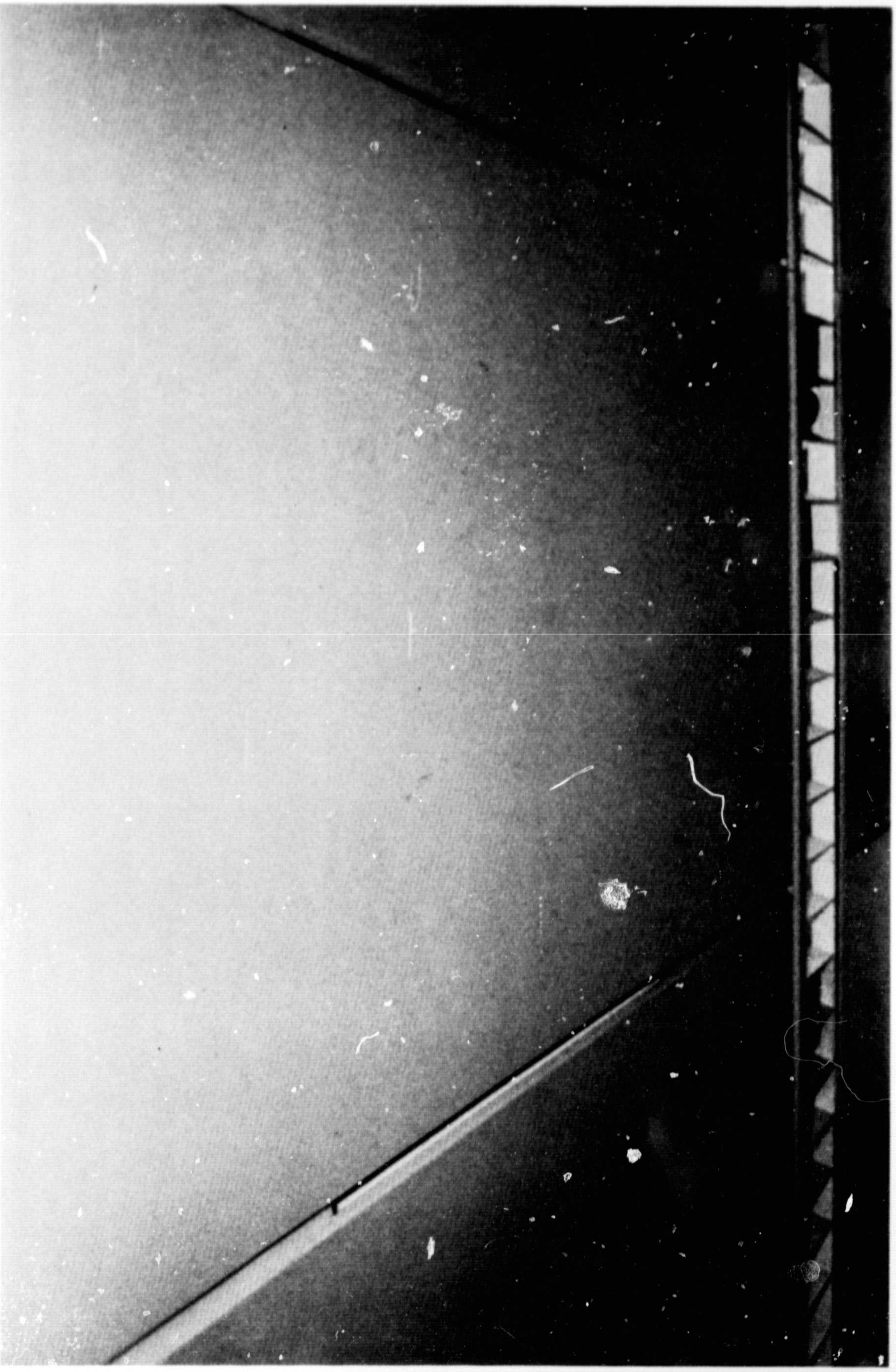

FIGURE 10. AIR SLOTS BETWEEN CENTER CEILING PANELS

FIGURE 11. DC-10 MID PASSENGER COMPARTMENT (CEILING SLOTS NOT VISIBLE)

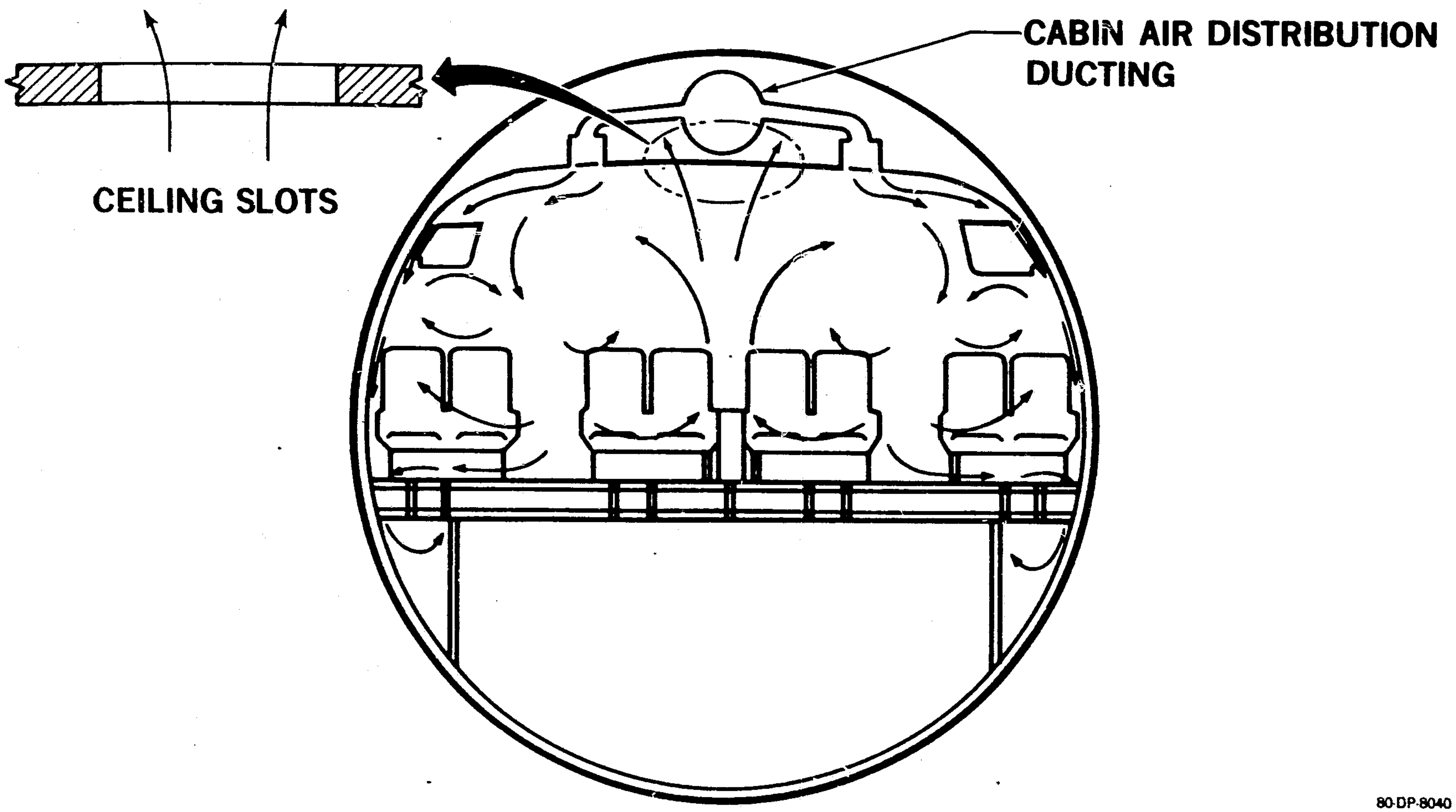

FIGURE 12. CABIN AIR CIRCULATION PATTERNS WITH RECIRCULATION

air cycle packs can be varied through the use of special dual schedule flow control valves (Figure 9). Variation is achieved by selecting normal or low flow settings for each of the valves. Normal flow from each pack is approximately 57 m^3/min (2000 cfm) and low is approximately 42 m^3/min (1500 cfm), or 75 percent of normal flow. Switches for the flow control valves and recirculation fans are located at the flight engineer's station as shown in Figure 13. The existing pack mode selector switches on the flight engineer's panel, which turn the flow control valves on and off, are retained. By selecting the number of packs operating, the positions of the dual schedule flow control valves, and the number of fans operating, a wide range of fresh air flow and total ventilation rates can be obtained for evaluation. A map of the possible operating points is shown in Figure 14. The fresh and recirculated air flow rates for the three cabin zones are shown in Table 2. The numbers circled on the map correspond to the case numbers in the table. The flow rates are calculated for a typical cruise altitude of 10,700 m (35,000 ft) and for standard day conditions.

A typical installation of the fan, filter, and check valve is shown in Figure 15. The photograph was taken looking upward from the passenger cabin with the ceiling panels removed. The fans are mounted from fuselage structure above the ceiling, approximately in the center of the cabin on the left side, between the No. 2 and No. 3 passenger doors. They are low speed centrifugal fans which operate on 3 phase, 115-200 volts, 400 cycle power and draw approximately 6.5 amperes each. The filters upstream of the fans are installed just above the light troughs, and are also supported from fuselage structure. The nonreusable filters are 95 percent efficient at 0.3 micron particle size and will remove lint, dust, and large smoke particles. The dual flapper check valves, which are duct mounted at the fan discharge ports, prevent reverse airflow through the filter whenever the fan is not operating.

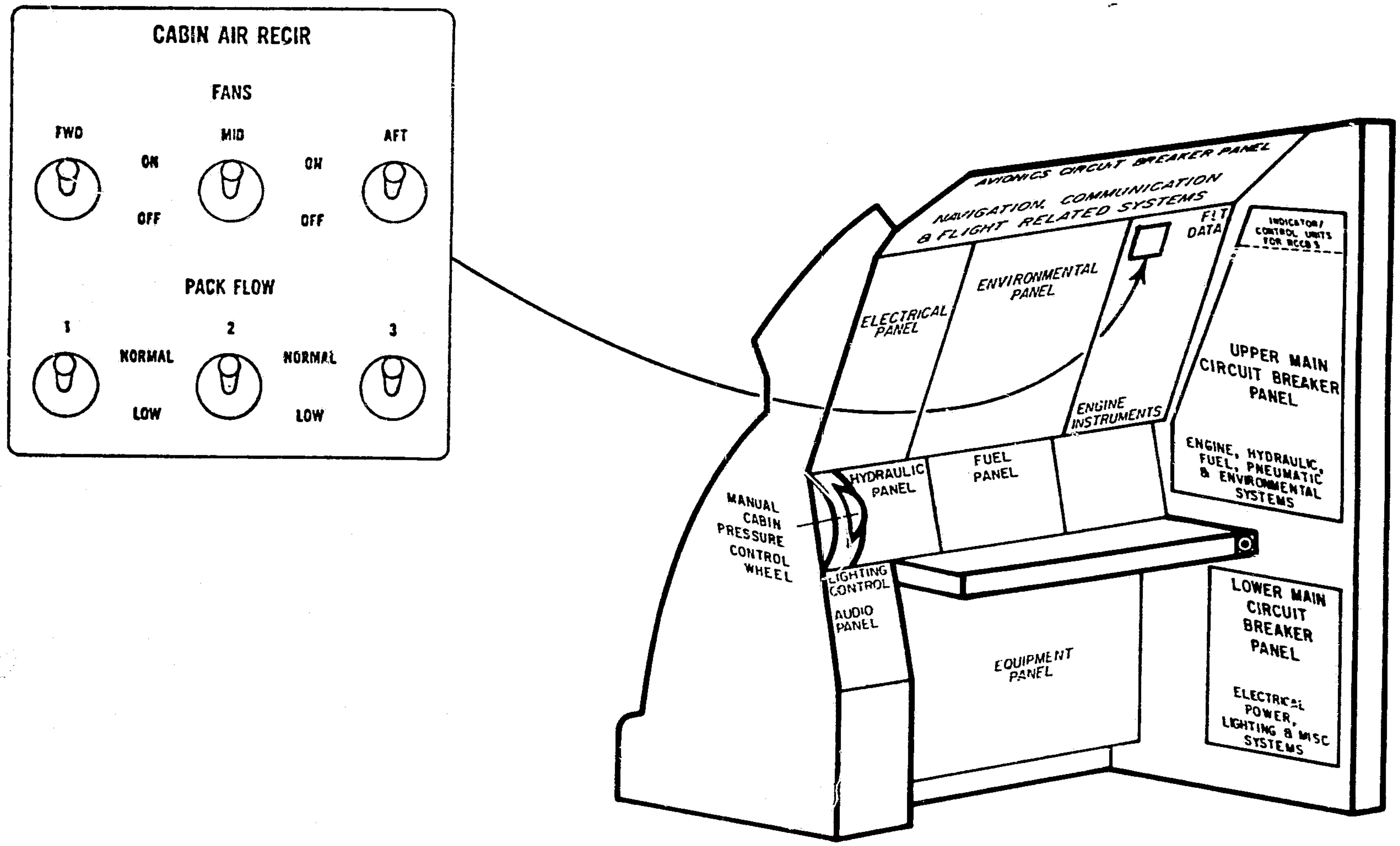

FIGURE 13. FLIGHT ENGINEER'S STATION

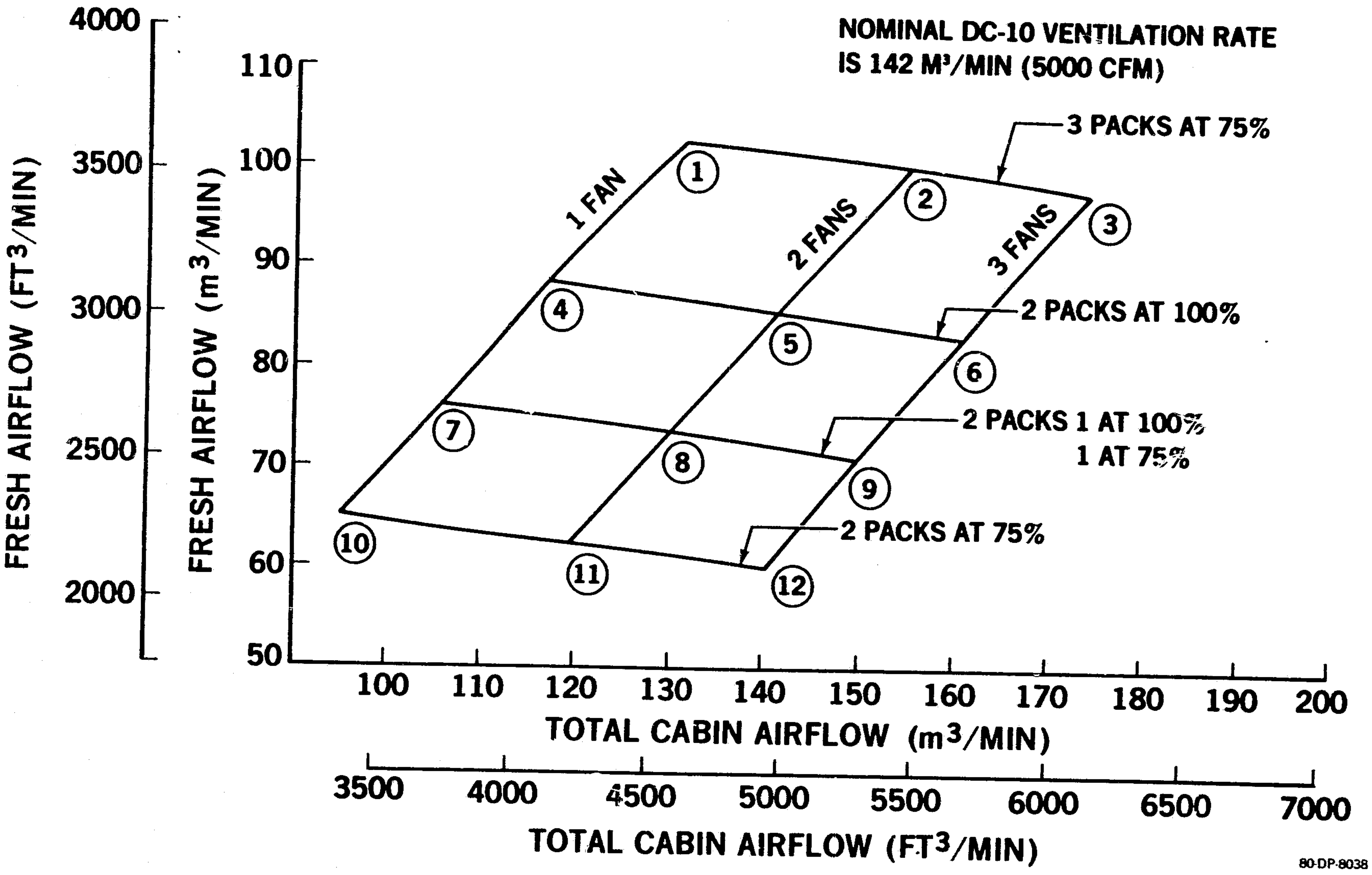

FIGURE 14. AIR RECIRCULATION SYSTEM OPERATING POINTS

TABLE 2. CABIN VENTILATION RATES

CASE	CONFIGURATION			CABIN VENTILATION FLOWS - m^3/min											
	A.C. PACKS			FORWARD CABIN			MID CABIN			AFT CABIN					
	NO	MODE*	FANS	FRESH	RECIRC	% RECIRC	FRESH	RECIRC	% RECIRC	FRESH	RECIRC	% RECIRC	TOTAL FRESH	TOTAL RECIRC	TOTAL FRESH +RECIRC
1	3	LOW	1	22.74	2.29	9	35.11	10.93	24	44.49	15.55	26	102.34	28.77	131.11
2	3	LOW	2	23.87	4.42	16	34.04	21.04	38	41.91	29.90	42	99.82	55.36	155.18
3	3	LOW	3	24.69	6.14	20	33.02	29.22	47	39.64	41.54	51	97.35	76.90	174.25
4	2	NORMAL	1	19.82	2.29	10	30.30	10.87	26	38.23	15.43	29	88.35	28.60	116.95
5	2	NORMAL	2	21.04	4.50	18	29.05	21.35	42	35.23	30.36	46	85.32	56.21	141.53
6	2	NORMAL	3	21.95	6.23	22	28.03	29.59	51	33.13	42.05	56	83.11	77.87	160.98
7	2	1 NORMAL 1 LOW	1	17.41	2.41	12	26.05	11.41	30	32.56	16.20	33	76.02	30.02	106.04
8	2	1 NORMAL 1 LOW	2	18.63	4.53	20	24.95	21.58	46	29.90	30.67	51	73.48	56.78	130.26
9	2	1 NORMAL 1 LOW	3	19.54	6.31	24	23.79	30.02	56	27.47	42.67	61	70.80	79.00	149.80
10	2	LOW	1	15.32	2.41	14	22.23	11.41	34	27.58	16.20	37	65.13	30.02	95.15
11	2	LOW	2	16.34	4.59	22	21.07	21.80	51	24.86	30.98	55	62.27	57.37	119.64
12	2	LOW	3	17.41	6.40	27	20.30	30.44	60	22.43	43.27	66	60.14	80.11	140.25

* NORMAL = 100% DC-10 FLOW
LOW = 75% DC-10 FLOW

10,700 METER (35,000 FT) ALTITUDE
STANDARD DAY CRUISE

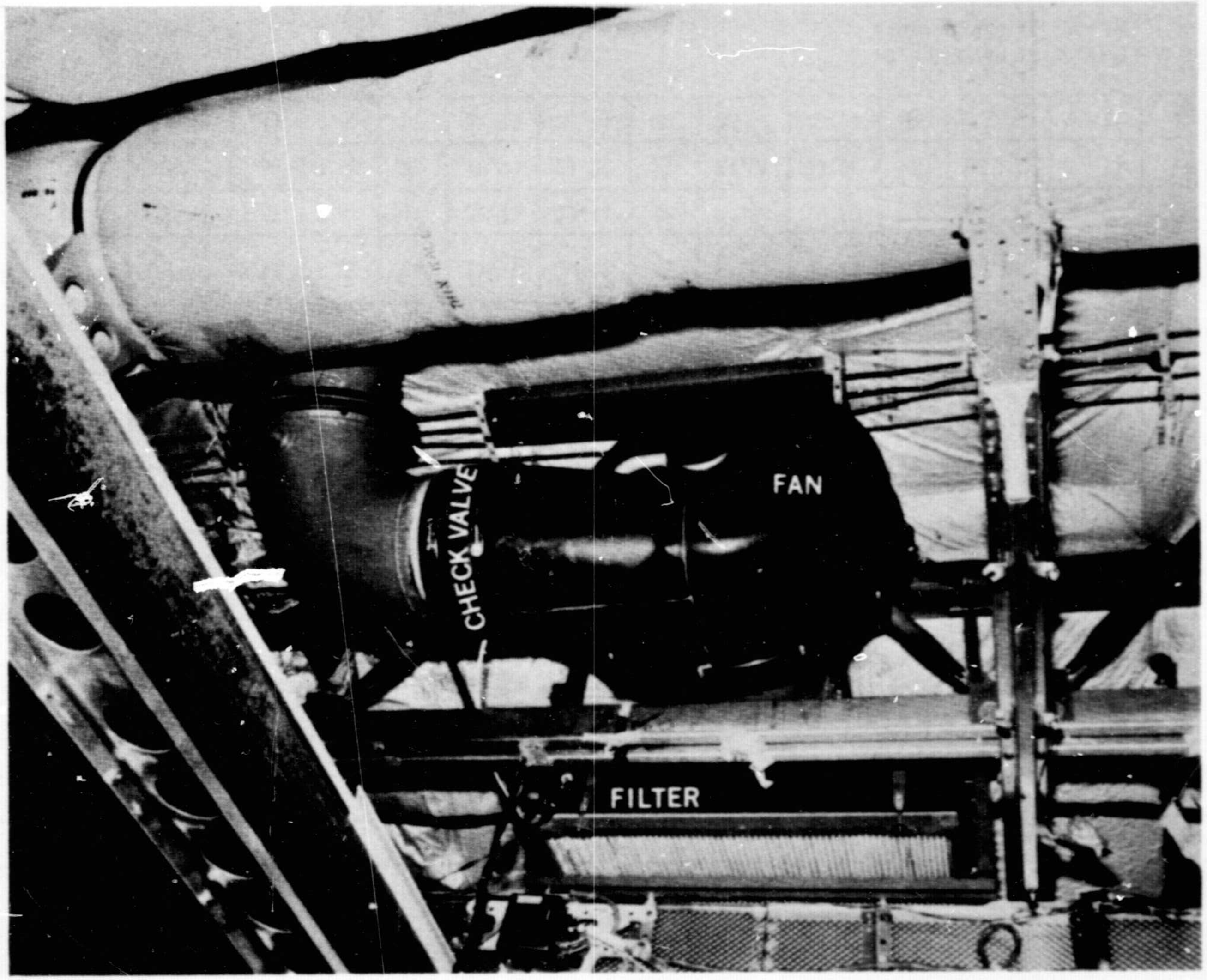

FIGURE 15. FAN FILTER AND CHECK VALVE
- MOUNTED ABOVE CABIN CEILING

3.3 PREDICTED FUEL SAVINGS

Analytical predictions were made for fuel savings for each of the possible operating points shown in Figure 14. The Master System Interface Computer Program developed for the DC-10 was used to generate the predicted savings. The master program interfaces with the Engine Cycle Program, the Pneumatic (bleed air) System Program, the Air Conditioning System Simulation Subroutine, and Aerodynamic Drag Data. The interfaces are shown in Figure 16.

Data required to compute the fuel flows include altitude, gross weight, mach number, and ambient temperature. With this input, the master program accesses the aero data and obtains the drag for this condition. The program divides the drag by three, sets it equal to the thrust of each of the three engines, and inputs these data to the engine cycle program. Engine bleed air pressures and temperatures, fuel flow, and other parameters (assuming zero bleed extraction) are computed and returned to the master program for input to the pneumatic system program. The mode of operation (high or low stage bleed) is determined and the pressure and temperatures available to the air conditioning packs are computed. These data are then input by the pneumatic system program into the air conditioning subroutine. Bleed air demands are computed, input back to the main program via the pneumatic system program, and in turn, to the engine cycle program. New bleed air pressures, bleed temperatures, and fuel flows for the revised bleed extraction rates are computed and supplied to the master program. Iteration continues with this procedure until the values converge.

Using the engine bleed air flows determined from this first computer run, thrust recovered at the cabin pressure control valve outflow nozzle was calculated and subtracted from the engine thrust. The new, corrected, engine thrust was then input back into the master program and the fuel flow obtained from the second run was used to compute the fuel saved with cabin air recirculation. The minor effects of reduced air conditioning ram air flow, recirculation fan power extraction, and recirculation system weight were determined separately from additional program runs and aerodynamic data.

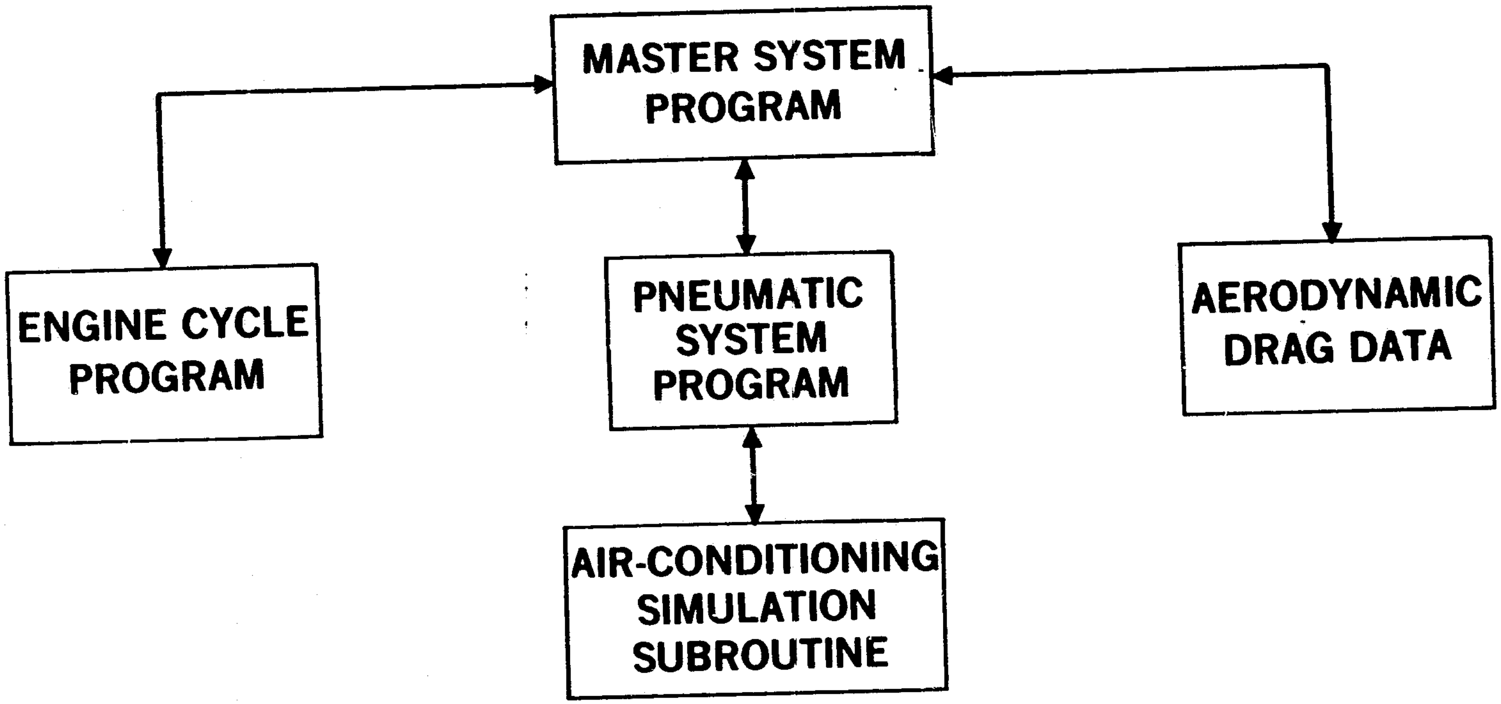

FIGURE 16. COMPUTER PROGRAM INTERFACE DIAGRAM

80-DP-8039-1

Thrust recovery from the cabin exhaust air was determined from the momentum of the air discharged overboard and directed aft by the variable nozzle valve. Calculations of the thrust were made using the equation:

$$T = C\,(W/g)\,V$$

Where:

T = Exhaust Thrust
C = Recovery Efficiency
W/G = Exhaust Mass Flow Rate
V = Exhaust Velocity

This calculation is generally similar to the one defined in Reference 3, except that a recovery efficiency is used instead of duct pressure drop. An efficiency of 0.86 was used for this valve based on Douglas wind tunnel tests for the DC-8 and DC-9 outflow valves. The DC-10 valve is similar. The loss in recovery efficiency is a result of the cabin air not being exhausted directly aft and the exhaust air scrubbing the fuselage. The flow of air from the exhaust valve equals the flow supplied to the cabin less uncontrolled and controlled leakages. The exhaust velocity is determined by assuming an isentropic expansion from cabin pressure to the ambient pressure outside of the aircraft. Because thrust recovery is substantial, predictions of fuel savings that do not take it into account can be very misleading.

In determining the fuel saved, engine fuel flows were computed with recirculation for each of the pack/fan operating modes shown in Figure 14. These were then compared to the base case, i.e., no recirculation and three packs operating at normal flow conditions, to arrive at the fuel savings listed in Table 3.

These calculations were made for the following typical aircraft operating conditions:

TABLE 3. CALCULATED FUEL SAVINGS

CASE	CONFIGURATION			FUEL SAVING — kg/HOUR						NET FUEL SAVINGS (LB/HR)	SAVING
	AIRCRAFT PACKS		FANS	BLEED AIR REDUCTION	LOSS OF THRUST RECOVERY	AIRCRAFT PACK RAM AIR FLOW	RECIRC FAN POWER	RECIRC SYSTEM WEIGHT	NET FUEL SAVINGS		PERCENT OF CRUISE FUEL FLOW
	NO.	MODE*									
BASE	3	NORMAL	0	0	0	0	0	0	0	0	0
1	3	LOW	1	39.51	−16.33	1.81	−0.27	−2.72	22.00	48.5	0.379
2	3	LOW	2	39.51	−16.33	1.81	−0.54	−2.72	21.73	47.9	0.374
3	3	LOW	3	39.51	−16.33	1.81	−0.82	−2.72	21.45	47.3	0.369
4	2	NORMAL	1	53.03	−22.05	2.27	−0.27	−2.72	30.26	66.7	0.521
5	2	NORMAL	2	53.03	−22.05	2.27	−0.54	−2.72	29.99	66.1	0.516
6	2	NORMAL	3	53.03	−22.05	2.27	−0.82	−2.72	29.71	65.5	0.511
7	2	1 NORMAL 1 LOW	1	66.09	−27.49	3.18	−0.27	−2.72	38.79	85.5	0.667
8	2	1 NORMAL 1 LOW	2	66.09	−27.49	3.18	−0.54	−2.72	38.52	84.9	0.663
9	2	1 NORMAL 1 LOW	3	66.09	−27.49	3.18	−0.82	−2.72	38.24	84.3	0.658
10	2	LOW	1	79.52	−33.48	3.63	−0.27	−2.72	46.68	102.9	0.803
11	2	LOW	2	79.52	−33.48	3.63	−0.54	−2.72	46.41	102.3	0.799
12	2	LOW	3	79.52	−33.48	3.63	−0.82	−2.72	46.13	101.8	0.794

DC-10-10/CF6-6D ENGINE

*NORMAL = 100 PERCENT DC-10 FLOW
LOW = 75 PERCENT DC-10 FLOW

ALTITUDE = 10,700 METERS (35,000 FEET)
GROSS WEIGHT = 140,600 KILOGRAMS (310,000 POUNDS)
CRUISE SPEED = MACH 0.81

AMBIENT TEMP = 218.9 DEG KELVIN (−66°F)
RECIRCULATION SYSTEM WEIGHT = 106 KILOGRAMS (234 POUNDS)

80 DP 8042

• Altitude	10,700 meters (35,000 feet)
• Gross Weight	140,500 kilograms (310,000 pounds)
• Cruise Speed	Mach 0.81
• Ambient Temperature	219° Kelvin (-66°F) (Standard Day)

The net thrust remained constant in all cases since the above input data were held constant.

The net savings, as well as the individual source of contribution or loss for each operating point, are shown in the table. As expected, reduction in bleed air extraction is the dominant source of savings. A secondary source of fuel savings is the lower drag resulting from reduced ram air cooling demands of the pack heat exchangers. The additional fuel required to overcome the reduced thrust from the cabin air outflow (pressure control) thrust recovery valve is a surprisingly large reduction of the savings, on the order of 40 percent in most cases. The weight of the recirculation system and the electric power used by the fan increase fuel consumption, but these losses were found to be of secondary significance.

As shown in Table 3, a fuel savings of 0.8 percent was calculated for cases 10, 11, and 12, all of which correspond to a 50 percent reduction in bleed air extraction for cabin air conditioning. This savings was set as the goal for the program.

SECTION 4
MANUFACTURE

4.1 FABRICATION

The design of the cabin air recirculation system was influenced by the fact that only one ship set of parts was to be produced. Existing parts were used wherever possible. The support for the filter plenums, shown in Figure 17, is an example of this approach. The structural rail in the left side of the picture is a standard aluminum extrusion. The fitting attached to the rail to support the plenum is a die casting designed for the DC-9 overhead baggage rack.

The recirculation ducting is of the same light-weight design developed for the cabin air distribution system and was, in general, made from large diameter texturized (dimpled) aluminum sheet. The sheet was rolled into a circular section and then welded. This type of ducting was made in straight sections and cannot be bent. Bends were made separately and welded onto straight segments of texturized ducts. When a bend is required, an arc segment was cut from a doughnut shaped duct and was then welded to two adjacent straight sections. The doughnut shaped ducts were made in two halves. The halves are identical and were formed by metal spinning an annular duct half on a spin block. The two annular halves were welded together to form a complete 360 degree circular duct. It was necessary to build simplified weld fixtures for about one-half the ducts in order to ensure that the duct would fit the aircraft support system.

Approximately half of the sheet metal duct support brackets are modifications of existing parts. Two of the three complex fan air inlets to the large diameter recirculation manifolds are segments of existing cabin air distribution ducting. Their use resulted in improved pressure drop characteristics and less tooling costs. The recirculation fans, filters, and

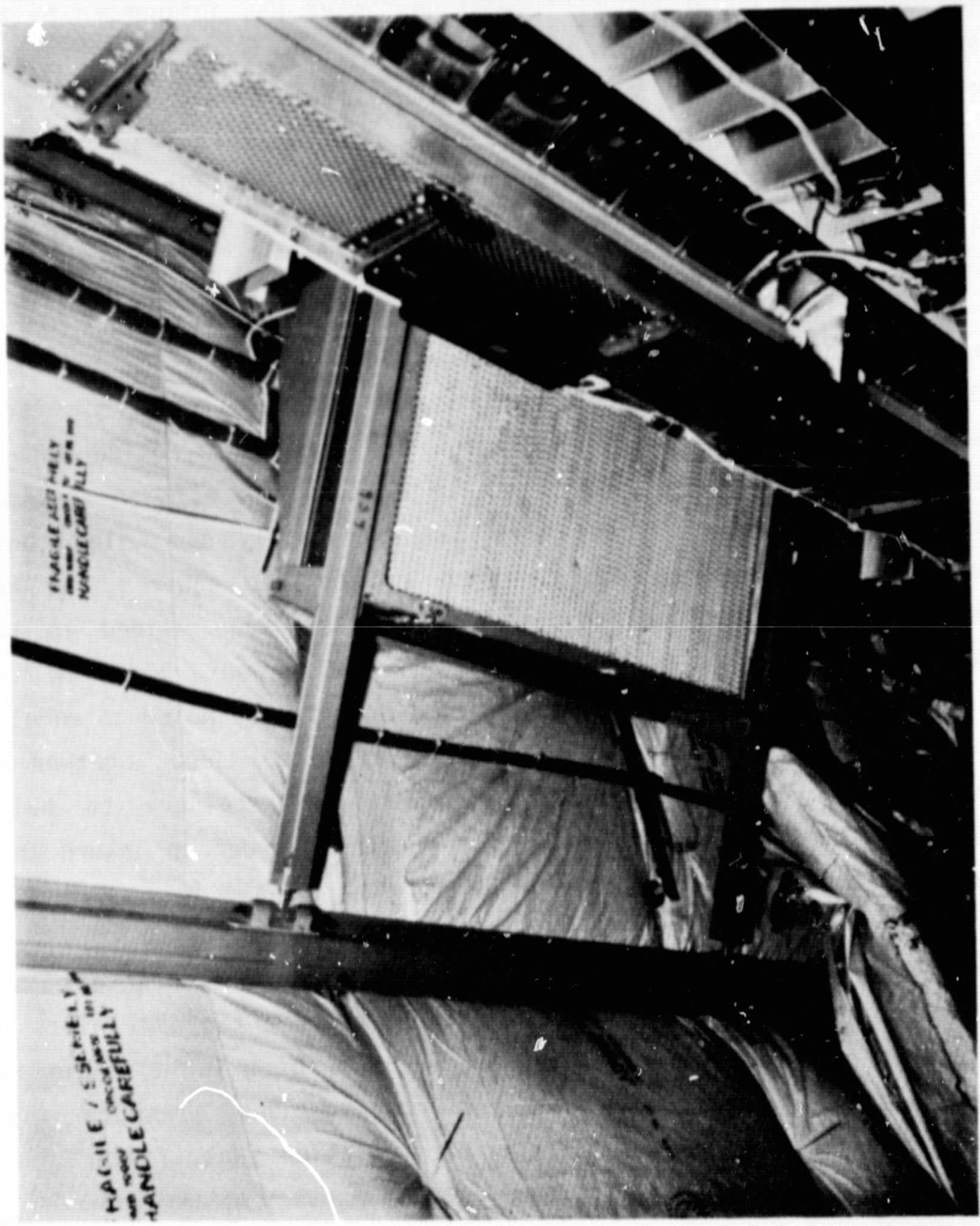

FIGURE 17. FILTER INSTALLATION

check valves are "off-the-shelf" components procured from outside manufacturers. The dual schedule flow control valves are modifications of the production (single schedule) flow control valves. These valves were modified and tested by the manufacturer.

4.2 INSTALLATION

The recirculation system was not added to a completed aircraft but was installed during the normal production build-up of DC-10-10 fuselage 294 which would later become American Airlines aircraft N132AA. This permitted structural supports for the filters and fans to be added to the fuselage shell before being hidden by installation of fuselage soundproofing and insulation blankets. Brackets and support rails were then attached to the structural members extending through the vapor-proof insulation blankets. The fans, the plenums containing the filters, and the check valves were mounted to the brackets and support rails. The recirculation ducts were mounted directly to the ceiling structure and to the cabin air distribution ducts. Figure 1 shows the type of airplane on which the system is installed.

The dual schedule flow control valve is interchangeable with the standard DC-10 flow control valve. However, the dual schedule valve requires an additional electrical connector for the dual schedule control feature and a modification of the sound attenuation blanket surrounding the valve.

Wire runs were routed so that they could be clipped to the existing runs wherever possible. Control circuit-breakers were located in spare positions on the flight engineer's upper main circuit-breaker panel. The fan power breakers and relays were located on existing equipment panels. Controls for the valve position and fan power were located in unused space on the flight engineer's panel (Figure 13).

The completed installation passed a conformity inspection by the FAA and received its final approval.

4.3 MAINTAINABILITY

The major recirculation system components requiring maintenance are the fans, filters, flow control valves, check valves, wiring, and ducting. The maintainability procedures considered in the design were consistent with normal airline maintenance practice.

Access to the system components is gained by removing the ceiling panel closest to the unit, or units, requiring attention. Figures 18 through 20 illustrate, in sequence, how the filter is removed. First, two bolts, one on each side of the filter, are removed (Figure 18). The filter assembly is then pulled free by sliding it out and down as shown in Figures 19 and 20. It is estimated that the time between filter replacements will be approximately 3500 flight hours. Fittings for recording pressure drop across the filter and across the fan have been incorporated on the adjoining duct sections. This makes it possible to monitor the increased pressure loss caused by the accumulation of dirt in the filter. The pressure drop is a direct measure of the percent decrease in recirculation air flow. From this data an optimum filter replacement time can be established.

The fan is easily removed by disconnecting the bolted attachments on the fan housing, loosening the hose connections at the inlet and exhaust ports, and disconnecting the electrical receptacle (Figure 15). The check valve is assembled as an integral part of the elbow on the discharge side of the fan. To remove the check valve/elbow assembly, the hose connection at the fan exhaust port is loosened and the bolted flange on the downstream side of the elbow is disconnected.

Access to the dual schedule flow control valves, installed upstream of the air cycle packs, is through the external door leading to the air conditioning compartments on either side of the nosewheel well. The valves are line mounted with V-band clamps.

FIGURE 18. FILTER REMOVAL

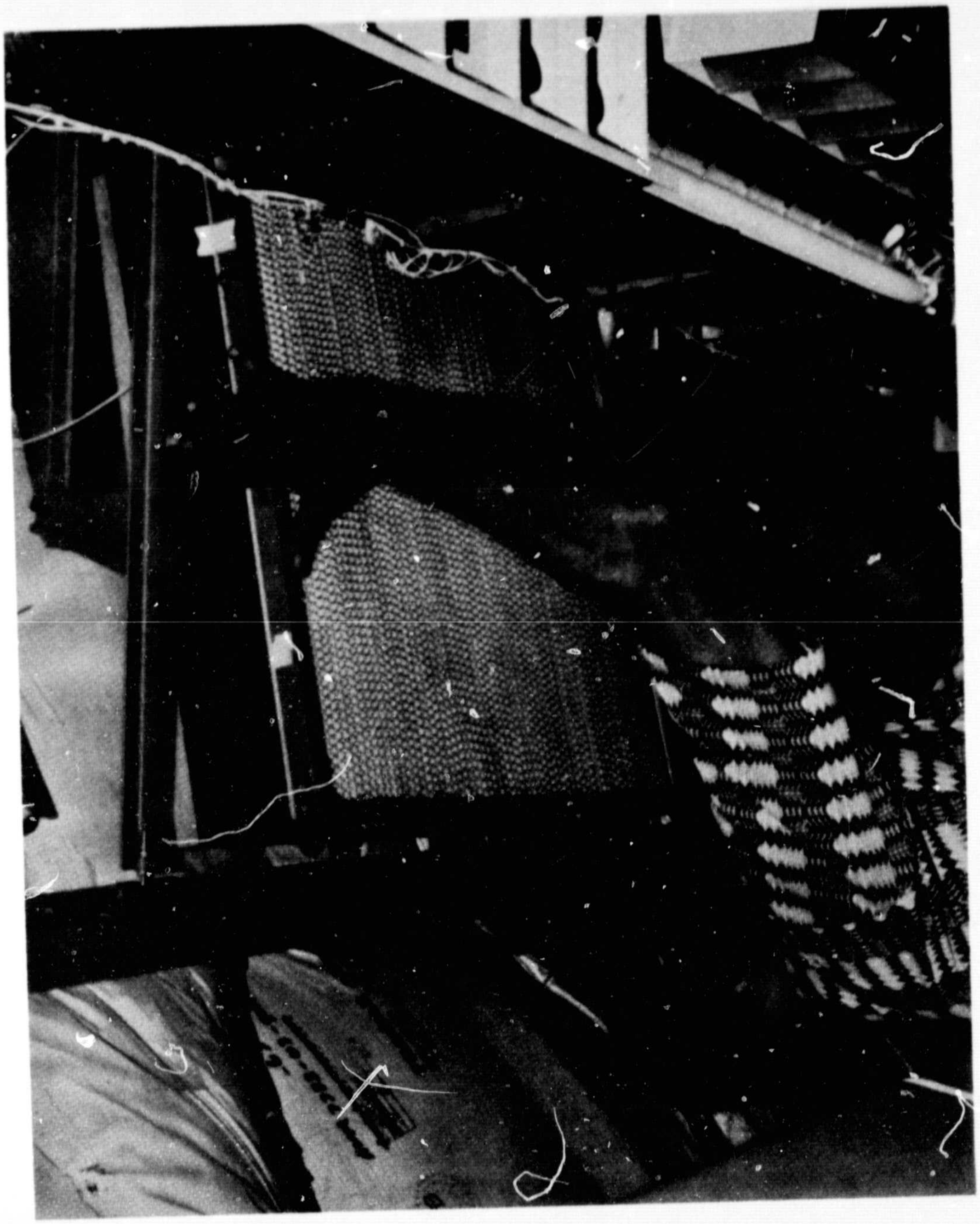

FIGURE 19. FILTER REMOVAL

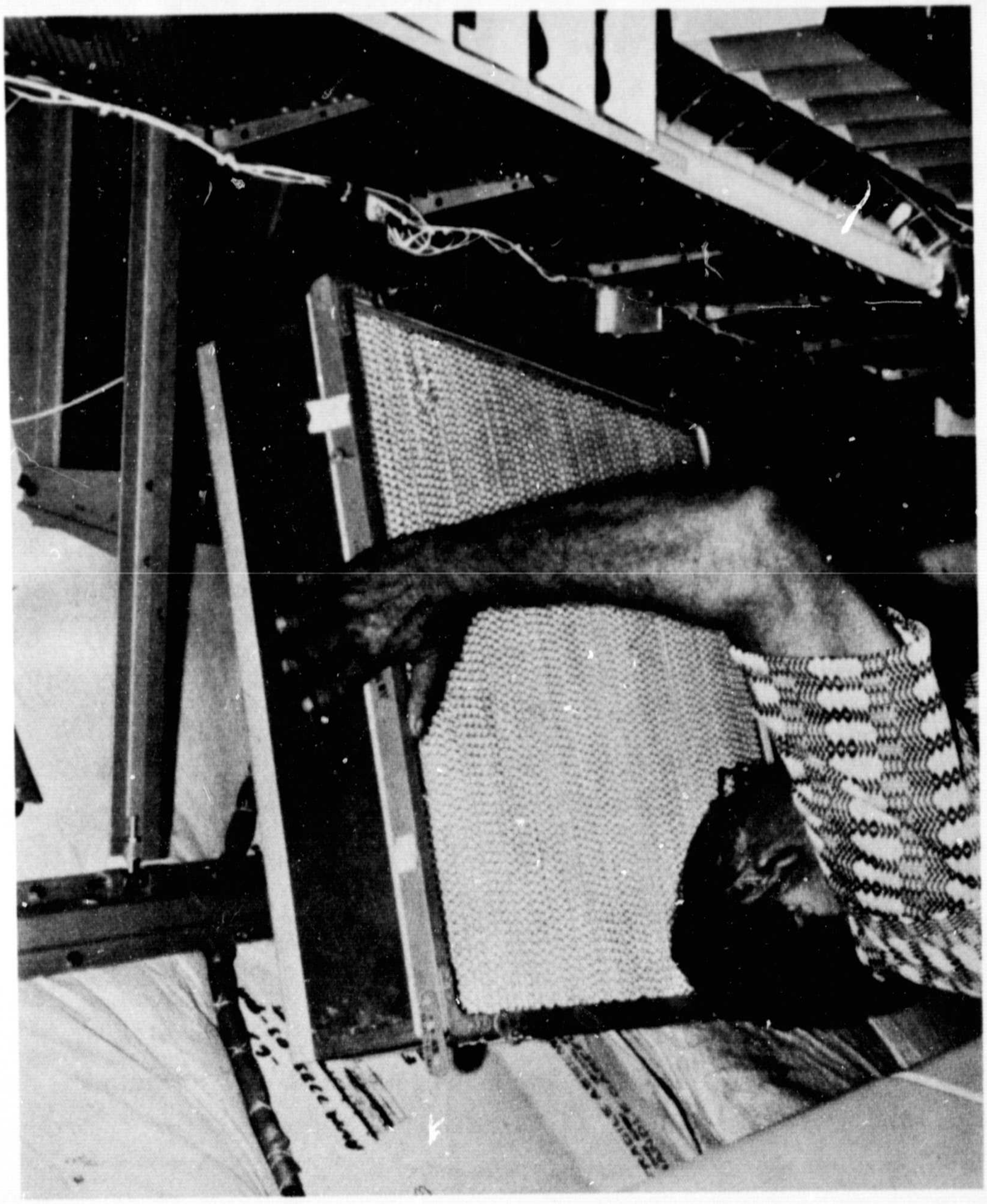

FIGURE 20. FILTER REMOVAL

4.4 RELIABILITY AND SAFETY

The recirculation system component reliabilities in Mean Time Between Unscheduled Removals (MTBUR) are listed below:

• Fan:	10,964 Hours MTBUR
• Check Valve:	100,000 Hours MTBUR
• Dual Schedule Flow Control Valve	3,694 Hours MTBUR
• Filter:	Targeted for 3500 hours replacement time (67,521 Hours MTBUR)

The reliability values for the fan and check valves were obtained from airline service records on the Boeing B747. Those for the dual schedule flow control valve and filter were provided by the manufacturers.

A failure analysis conducted on the recirculation system has shown that there are no hazardous failure modes associated with its operation. In the process of certification, the FAA approved a System Fault Analysis prepared by Douglas.

The recirculation fans are equipped with overheat thermal switches set at 408°K (275°F) to protect the motor windings. The relatively low temperature setting was selected to preclude the possibility of smoke being generated from the motor windings due to a failure such as a seized fan or rotor. In the event of fire or smoke anywhere in the cabin, the recirculation fans would be turned off by the Flight Engineer to prevent the spread of smoke or fire to other parts of the cabin. A vertical burn test of the air filter, conducted in accordance with the Douglas Material Specification, has been approved by the FAA.

There are no hazards associated with the failure of one or more of the fans. If the cabin becomes uncomfortable because of a reduction in ventilation rate, the crew can switch to normal (100 percent) flow from the air cycle packs. Also, a failure of one or more recirculation system check valves has no adverse effect on system safety. In the event a valve should fail to check the back-flow of air through an inoperative fan, the result simply would be a diversion of some of the cabin air from its normal supply path. Air from the failed check valve would flow back through the fan and filter into the volume above the ceiling. From there, it would find its way into the cabin, either down through the slots between the cabin ceiling panels or through the normal recirculation course provided by the other fans in operation. The net result would be a minor disruption of the normal air circulation patterns in the cabin.

As part of the fan qualification tests conducted by the manufacturer, burst containment at maximum operating speed was demonstrated in accordance with FAA regulations. Qualification tests of the dual schedule flow control valves were also conducted by the manufacturer to prove their reliability. A failure of the flow control valve will not present a safety problem because there is redundancy provided by three air cycle systems, as in the standard DC-10 system.

SECTION 5
PERFORMANCE EVALUATION

5.1 CABIN ENVIRONMENT

The limit of cabin air recirculation that can be achieved while still maintaining a comfortable cabin undoubtedly varies from one aircraft design to another. It is influenced by the air flow patterns in the cabin, the location of the air inlets and exhausts, geometry of the cabin, location of the overhead storage racks, seating density, location of the smoking zones in the cabin, and the location of the air inlets for the recirculation fans. Cabin air circulation patterns in the DC-10 with recirculation are shown in Figure 12. The recirculation system was designed to determine an optimum operating point for the DC-10. The optimum point is defined as the minimum rate of bleed air extraction for air conditioning that maintains a comfortable cabin.

Optimum Operating Point

When planning the evaluation procedure to be followed in determining the optimum point, all possible operating modes were included. Further, it was anticipated that factors which might designate a point unsatisfactory would be inadequate ventilation, excessive smoke, and/or odors carried over from the smoking sections to the nonsmoking sections by too much recirculation. These considerations are reflected in the plan for selecting the optimum operating point shown in Figure 21. In some cases, in order to cover all possibilities, a point was selected for evaluation whether the preceding point was satisfactory or unsatisfactory.

One observer from American Airlines and one from Douglas were on board the aircraft for the evaluations. The starting point (case 5) was selected as being relatively certain of providing acceptable cabin conditions. (The case numbers in Figure 21 correspond to those in Figure 14.) At the beginning of the evaluation on aircraft N132AA Case 5 proved to be acceptable. The next step, Case 8, reduced the fresh air inflow (bleed air extraction) and was

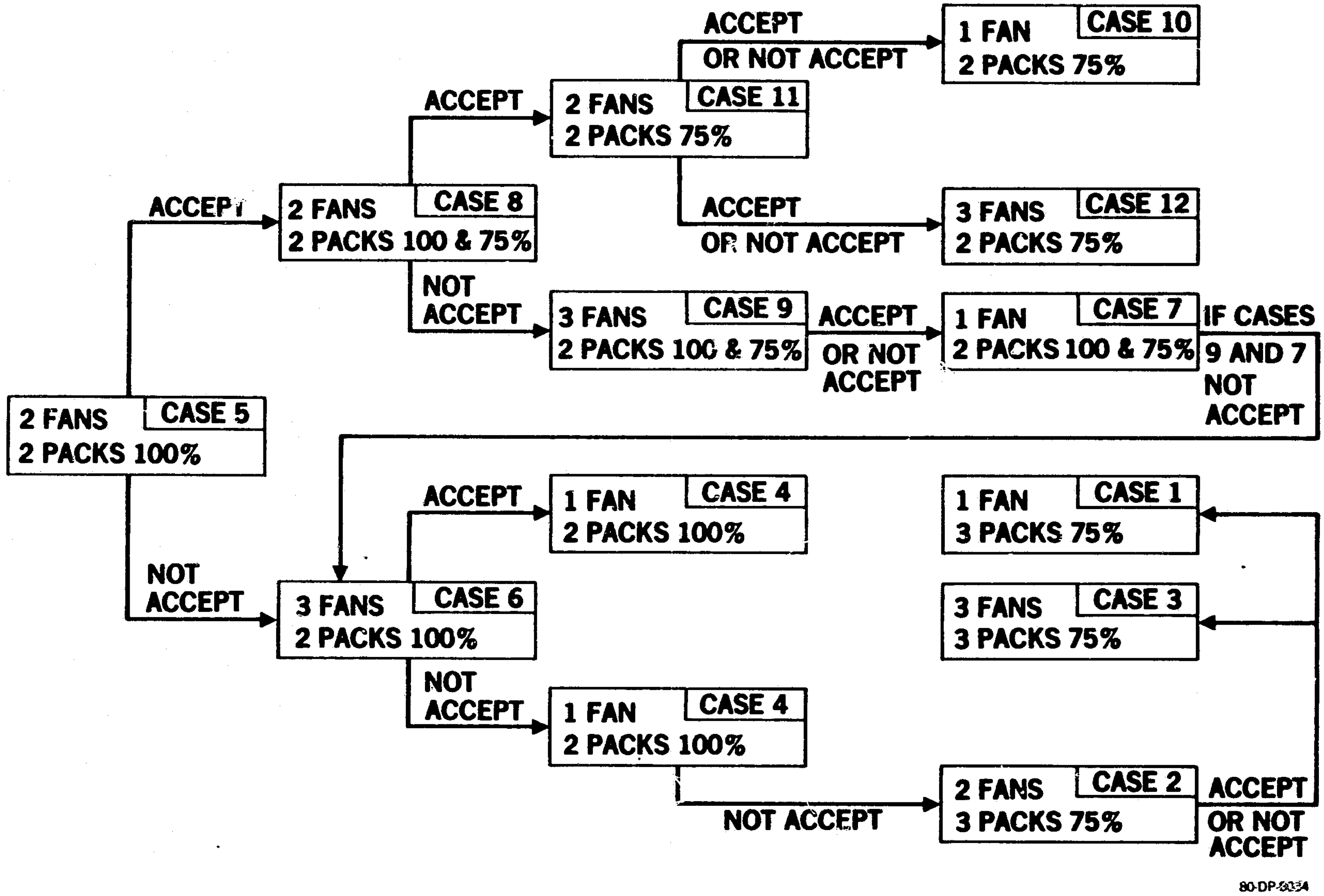

FIGURE 21. PLAN FOR SELECTING THE OPTIMUM OPERATING POINT

acceptable. Case 11 was the next point evaluated, as specified by the evaluation plan, and this point was unacceptable because of excessive haze accumulation at the ceiling. Two packs on low and three fans, Case 12, has been successfully evaluated on one high density flight. Case 12 represents the maximum reduction in bleed air flow shown in Figure 14 and achieves the 0.8 percent fuel savings goal.

Environmental Benefits

Air circulation has improved the cabin environment in three areas. First, the circulation patterns in the cabin are enhanced. This improvement is derived because air flowing from the cabin through the ceiling slots, as shown in Figure 12, carries with it the haze that tends to accumulate at the ceiling level, particularly during flights with high passenger loads. The high efficiency filters remove most of the particles (mainly smoke). Removal of the haze has a psychological as well as a physiological benefit. A second improvement is the reduction of the ozone level in the cabin. This factor has not been demonstrated on aircraft N132AA, however, measurements of ozone concentration on aircraft (Reference 4) have demonstrated a significant reduction in cabin ozone with air recirculation. The third improvement is the higher humidity associated with cabin air recirculation. This results from the constant rate at which passengers add moisture to the cabin air and the lower rate of fresh air flow through the cabin.

5.2 FUEL FLOW MEASUREMENTS

Fuel flow measurements with and without reduced bleed air extraction were made on an unmodified DC-10 aircraft which had been instrumented for performance evaluation tests. The aircraft fuel flow indicators and transmitters were bench calibrated prior to conducting the tests. In addition to fuel flow, such performance parameters as Mach number, altitude, gross weight, static air temperature, engine rotor speeds, and exhaust gas temperatures were monitored and recorded continuously on flight test recording equipment. With the aircraft in a cruise condition at approximately 11,600 meters (38,000 feet), Mach 0.82, and with three packs operating, conditions were sought in which Mach number, engine RPM, static air temperature, altitude, wind direction, and wind speed were relatively steady. When these conditions were judged suitable, data were recorded for the three pack case. Packs Two and Three were then shut off and their ram air inlet and exhaust doors closed. Flight conditions were again stabilized and data were recorded for the single pack case.

Data printouts were obtained at ten second intervals for the two test runs. By inspection of the printouts, a segment of particularly stable data from the three pack run and one from the single pack run were isolated for comparison (Figure 22). The data in these segments were averaged and various corrections and adjustments were made to convert the fuel flows to the following baseline condition used in predicting the fuel saving: 10,700 meter (35,000 feet) altitude, standard day cruise, at Mach 0.81. The following presents the procedure used.

Correction factors derived from aerodynamic performance data, which are applicable within the narrow range of flight conditions encountered during the test runs, are listed in Table 4. First these factors were used to correct the measured fuel flows (three pack and single pack) to a known documented performance point very near the flight test conditions: 11,600 meter (38,000 feet) altitude, 149,685 kilogram (330,000 pound) gross weight, standard temperature minus 10 degrees Kelvin, and 0.82 Mach number. The difference in fuel flows between this point and the standard day baseline condition (also a known performance point) were then applied to the measured flows as initially corrected to arrive at measured fuel flows adjusted to the standard day baseline cruise condition. The adjustments also included the addition of recirculation system weight to, and deduction of fuel burned weight from the single pack aircraft gross weight. The raw test data include the effects of ram air drag and thrust recovery. The effect on fuel flow of electrical power for the recirculation fans is negligible. The measured fuel flows, along with the corrected fuel flows, are listed in Table 5. It shows that when two packs are shut off, a difference of 1.35 percent of the normal (3 pack) fuel flow is realized.

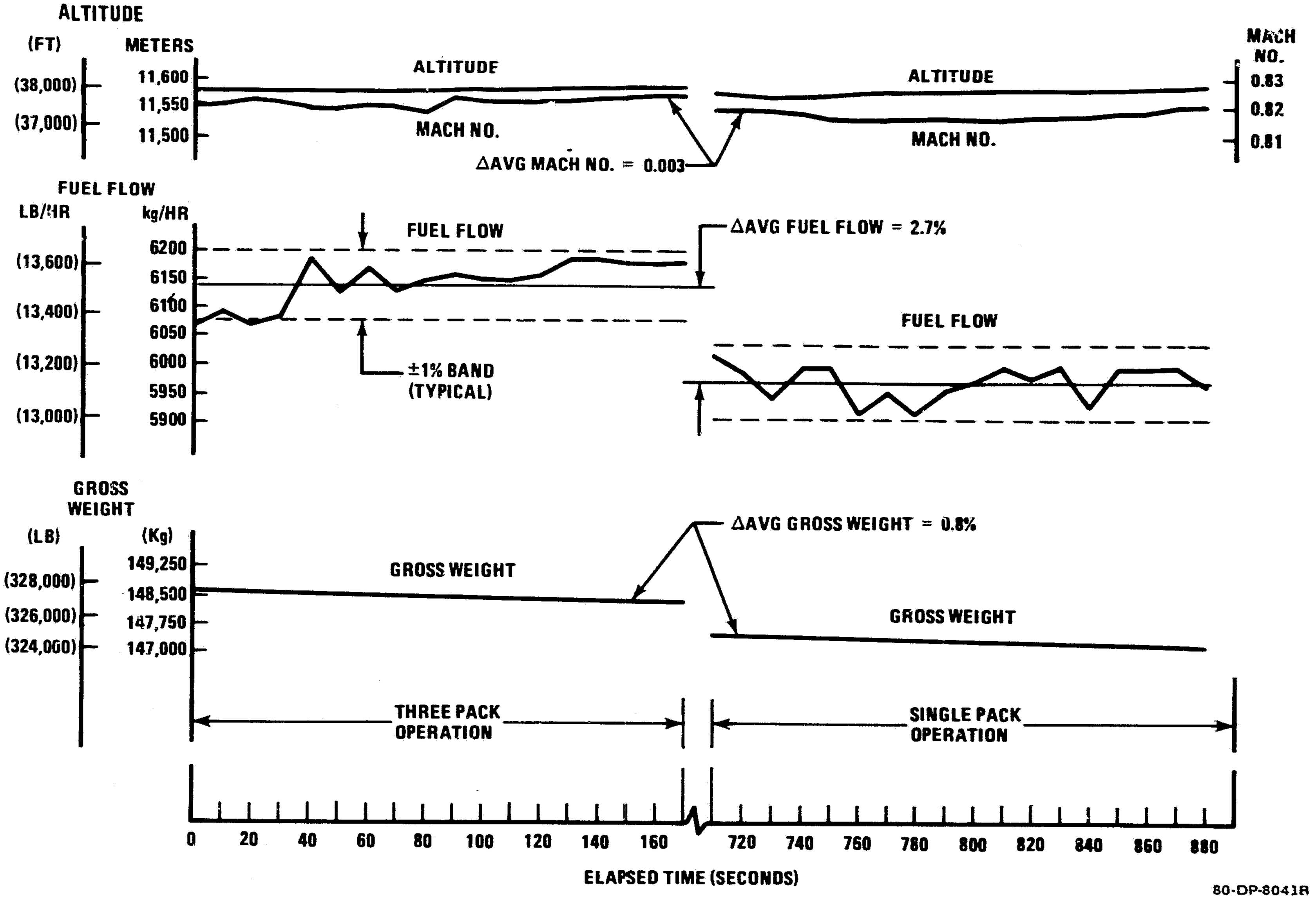

FIGURE 22. MEASURED FUEL FLOWS

TABLE 4

FUEL FLOW CORRECTION FACTORS - AT TEST CONDITIONS

	GROSS WEIGHT (per 10,000 lbs or 4536 kg)	AMBIENT TEMP (per 10°C or K)	MACH NUMBER (per 0.01 Mach)	ALTITUDE
KILOGRAMS OF FUEL PER HOUR	168	132	112	0
POUNDS OF FUEL PER HOUR	370	292	247	0

The correction factors shown were determined from Aerodynamic data and are usable in the range of:

GROSS WEIGHT - 145, 150 kg (320,000 lbs) to 149,685 kg (330,000 lbs)

AMBIENT TEMPERATURE - Standard to Standard - 10°K (or C)

MACH NUMBER - 0.81 to 0.83

ALTITUDE - 11,278 m (37,000 ft) to 11,887 m (39,000 ft)

TABLE 5. FLIGHT TEST FUEL FLOW MEASUREMENTS

	THREE-PACK RUN		ONE-PACK RUN		DIFFERENCE PERCENT
	KG/HOUR	LB/HOUR	KG/HOUR	LB/HOUR	
MEASURED FLOW	6140	13537	5973	13167	2.73
CORRECTED FLOW	6152	13562	6069	13379	1.35

80-DP-8043

5.3 COMPARISON OF MEASURED AND CALCULATED FUEL SAVINGS

The equivalent of one and one-half packs (50 percent reduction in fresh air) is the design goal for cabin air conditioning with recirculation. This is equivalent to one pack off and two packs on low. This condition could not be reproduced on the performance-instrumented flight test airplane because it had production flow control valves with only the 100 percent flow capability. When the aircraft was flown with only a single pack in operation, the bleed flow was reduced 67 percent. Scaling down the corrected fuel savings to a 50 percent reduction results in a 1.0 percent fuel saving. This is illustrated in Figure 23 which presents a comparison between the fuel savings based on the test data and the calculated values. The calculated fuel savings is approximately 0.8 percent for the same operating point (2 packs on low, i.e., 50 percent of normal 3-pack flow). Thus, the test results are a good substantiation of the predicted fuel savings.

An additional comparison was made between the measured fuel flow and the analytical predictions for the three pack case. The total fuel flow rates agreed within 0.4 percent. From these comparisons, as well as previous analytical and test results of DC-10 fuel consumption rate, the correlation between actual and computed fuel flows is considered excellent. The test results, and the analytical correlation, therefore lend a high degree of confidence that the predicted fuel savings presented in Table 3 will be achieved in service.

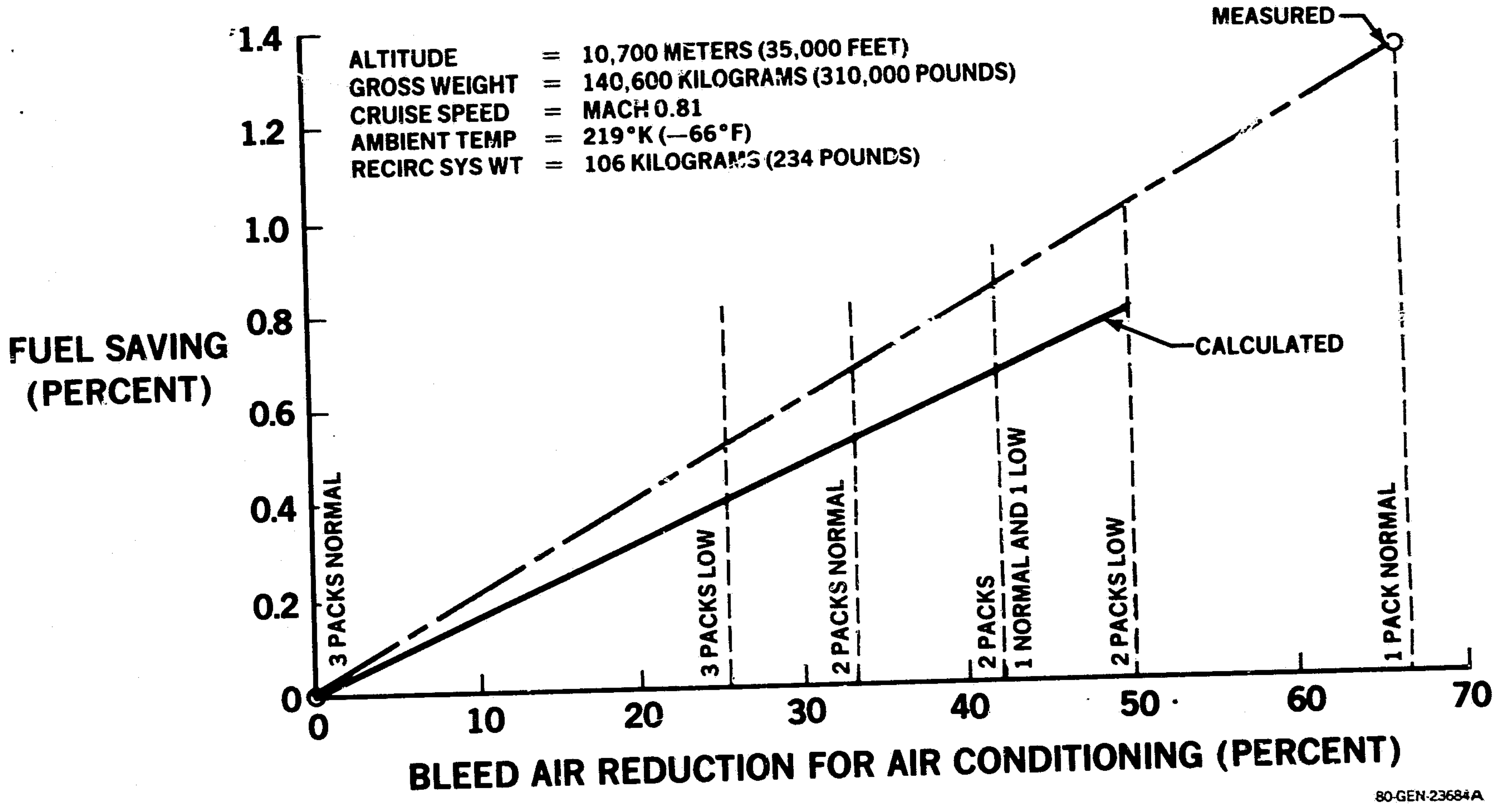

FIGURE 23. COMPARISON OF MEASURED AND CALCULATED FUEL SAVINGS

SECTION 6
IN-SERVICE EVALUATION

6.1 FLIGHT CREW EVALUATION

The flight crews on aircraft N132AA continuously monitored the recirculation system operation and its effect on the cabin environment. Questionnaire forms were provided for the purpose of recording their observations. The Flight Engineer, with the aid of the other crew members, completed one of the forms on each flight. Inputs from the Flight Attendants were particularly valuable because they were in the best position to evaluate the cabin environment and monitor the reactions of the passengers. A sample questionnaire is shown in Appendix B. The questions on the form pertain primarily to the number and location of the smoking and nonsmoking passengers, the operating mode of the packs and fans, and the general comfort conditions of the cabin ventilation and cabin temperature. Copies of the questionnaires completed by the flight crew were distributed to the cognizant American and Douglas engineers for use in their evaluation of the recirculation system. Results of the questionnaires are summarized in Table 6.

The results from 92 questionnaires are listed in the table. Most are evaluations of two particular cases. Forty are evaluations of case 5 (two packs operating at 100 percent and two fans on corresponding to a 33 percent reduction of bleed flow) and forty six are evaluations of case 9 (two packs operating, one at 100 percent and the other at 75 percent, and three fans on corresponding to a 43 percent reduction of bleed flow). For both of these configurations, 83 percent of the questionnaires rated the system completely satisfactory even though there was an additional 9 percent reduction in fresh air flow in the second configuration. To be classified completely satisfactory, the crew judged the conditions in the cabin and cockpit to be completely confortable in all respects.

Three case 5 flights and one case 9 flight were rated partially satisfactory. On those flights the passenger load varied from 53 percent to 100 percent. In all cases, the crew's comments were related to the presence of a smoke haze in the aft cabin above the smoking section. On one of the flights in this category, the American and Douglas observers were on board.

TABLE 6. FLIGHT CREW QUESTIONNAIRES

CASE	CONFIGURATION			% BLEED AIR REDUCTION	TOTAL NUMBER OF QUESTIONNAIRES	COMPLETELY SATISFACTORY	PARTIALLY SATISFACTORY	UNSATISFACTORY
	A.C. Packs		FANS					
	NO	MODE						
3	3	LOW	3	25	1	1	0	0
5	2	NORMAL	2	33	40	33 (83%)	3	4
6	2	NORMAL	3	33	4	4	0	0
9	2	1 NORMAL 1 LOW	3	42	46	38 (83%)	1	7
12	2	LOW	3	50	1	1	0	0
TOTALS					92	77	4	11

On this flight all seats were filled, and when a steady state cruise condition was reached, the system was operated with two packs on low and two fans on (50 percent bleed reduction, case 11). After a short period it was noted that a smoke haze had accumulated over the aft smoking section. The third fan was turned on (Case 12) which cleared the smoke, and conditions remained satisfactory for the remainder of the flight.

Several questionnaires rated the system unsatisfactory, four for case 5 and 7 for case 9. In each instance, all three packs were returned to normal (100 percent) operation, and in a majority of cases the fans were left on.

From a survey of this type, which was very subjective in nature, it was not expected that there would be 100 percent agreement among the questionnaires received. However, from observation made by the American and Douglas engineers on revenue flights, from discussions with the flight crews and cabin attendants, and from the questionnaires filled out by the crew, it was concluded that the recirculation system did not compromise the operation or effectiveness of the air conditioning system in any way, and in some respects, enhanced the system performance. When operating with two packs on low and three fans on, which achieves the goal of 0.8 percent fuel savings, the system remained environmentally acceptable to both the crew and passengers.

6.2 MAINTENANCE REQUIREMENTS

The net impact of the reduction in bleed air extraction on aircraft maintenance has been evaluated on the basis of increased DC-10 maintenance cost imposed by the recirculation system, and decreased maintenance resulting from a reduction in engine exhaust gas temperatures (EGT) when the engine bleed airflows are lowered.

In support of the recirculation system evaluation program, a kit of spare parts was delivered to American Airlines consisting of: one fan, one flow control valve, one check valve, and three filter elements. In the event of a component failure, American was to operate the airplane without recirculation (if necessary) until a replacement part could be installed. The failed part was to be sent to Douglas for disposition and repair as necessary and returned to American as a spare. The time spent on recirculation system maintenance by American was to be recorded and submitted to Douglas. All maintenance costs were to be compiled and recorded by Douglas. During the evaluation period, however, there were no problems or component failures, and consequently no maintenance costs recorded against the recirculation system.

The increased recirculation system on-aircraft maintenance cost was therefore determined using known MTBUR values and assumed removal and replacement times for the system components. The repair and material costs (off-aircraft) were obtained from American Airlines records on like or similar equipment. Included in the estimate is the cost to periodically replace the recirculation system air filters. On aircraft N132AA, the pressure loss across the filter, which is a measure of the amount of dirt accumulation in the filter, was checked prior to and at the end of the recirculation system evaluation period. The average increase in pressure loss was found to be 0.5 cm (0.2 inches) of water after 1700 flight hours of operation. From this information the projected filter replacement time was estimated to be 3500 flight hours. The overall increase in maintenance cost for the recirculation system was estimated to be $3,780 per year per aircraft.

The average reduction in engine EGT at cruise was determined from the engine cycle computer program to be $8^{o}K$ ($14^{o}F$). The decreased engine maintenance for this EGT reduction was obtained from General Electric data relating EGT to engine maintenance costs. The reduced cost was estimated at $7980 per year per aircraft. This results in a net maintenance cost saving per aircraft of $4,200 per year attributable to the recirculation system.

SECTION 7
ECONOMIC ASSESSMENT

Feasibility studies, which are reported in references 1 and 2, were conducted to aid in the selection of those performance improvement concepts to be developed under the Engine Component Improvement Program. The General Electric study (Reference 1) projected the following benefits for the DC-10 Cabin Air Recirculation System:

SFC Reduction, percent	0.7
Payback period, years	1.6 for the DC-10-10 1.2 for the DC-10-30
Fuel Savings Over the next 25 years, Millions of liters (gallons)	3720 (982)

Since the development has been completed, several of the assumptions used in the feasibility study have changed. The most significant change was the doubling of fuel costs as shown in Figure 24. Other less drastic changes have been the net decrease in maintenance costs, the increase in installation costs, and an increase in fuel savings. On balance, these changes have made the Cabin Air Recirculation System economically more attractive than it was in the earlier feasibility studies.

In computing the fuel savings for the economic assessment, a stage length of 1690 kilometers (1050 statute miles) was used which included the complete mission profile; i.e., climb, cruise and descent. It was assumed that the higher rate of fuel savings during climb than during cruise (because of the higher climb fuel flow rate) was offset by the lesser savings during the descent. Therefore, the fuel savings for the cruise condition (0.8%) was used for the entire stage length.

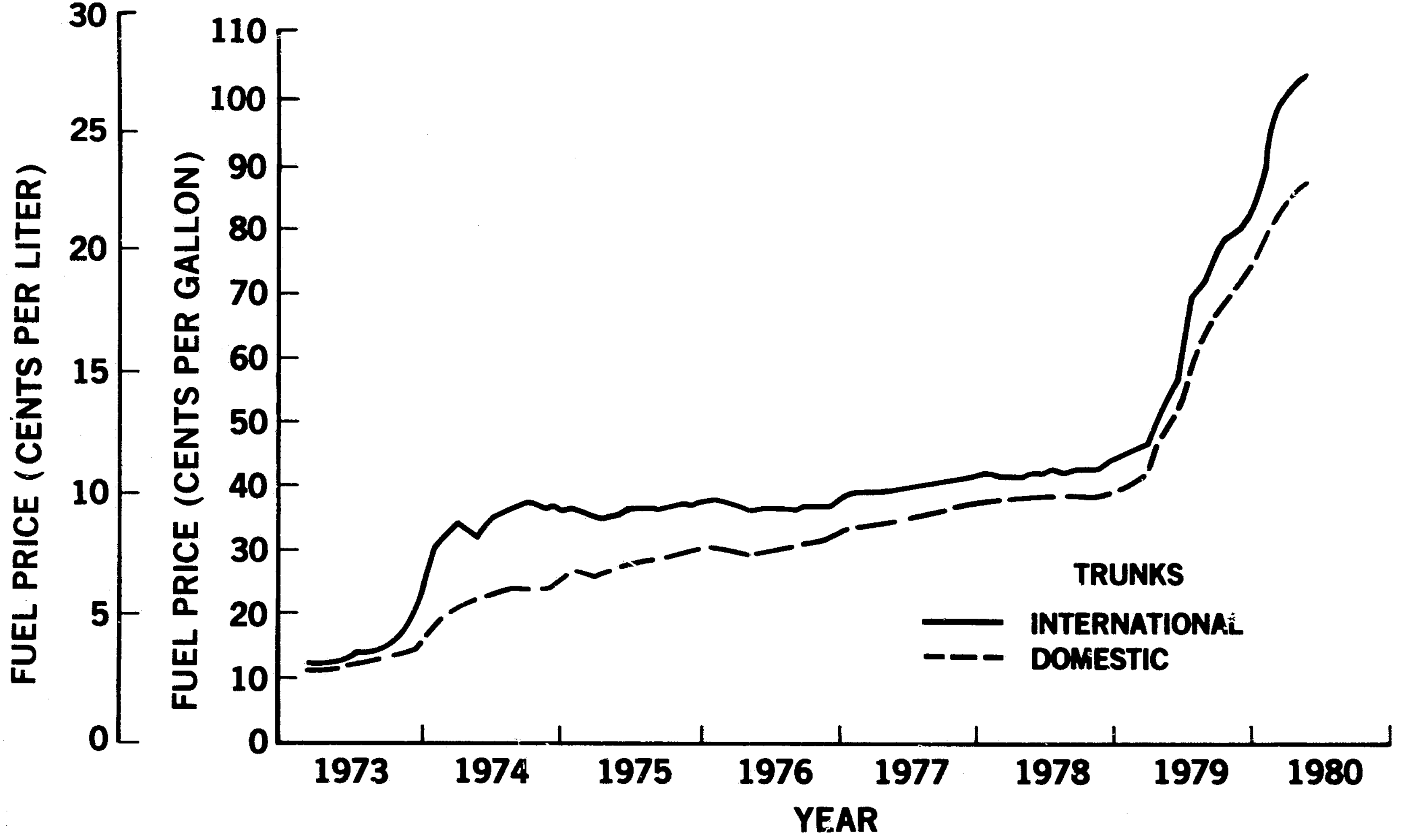

80-DP-8037A

FIGURE 24. FUEL COST HISTORY
U.S. AIRLINE JET FUEL PRICE MONTHLY AVERAGES CAB DATA

Figure 25 shows the anticipated payback period of the Cabin Air Recirculation System for current and future fuel costs. The variation in payback period is shown for three airplane pricing quantities and for two development costs. The variance in development cost of approximately 30 percent is due to detail differences in design but not in function. The more expensive system is an arrangement which is intended to simplify the retrofit of the system, while the less expensive one more nearly resembles the design installed on aircraft N132AA. The difference in development cost represents the probable range anticipated for two systems based on prices at the date of this report.

It can be seen from the figure that the current fuel price of approximately 25 cents per liter (95 cents per gallon), the system is cost effective. For the lower cost system installed on 200 airplanes, the payback period is about 1.3 years. (In the feasibility studies, a payback period of less than six years was considered acceptable.)

Figure 25 also illustrates how the payback period becomes less sensitive to development costs and to quantity of units produced as fuel costs rise. For example, at the cost of 25 cents per liter, the difference in payback period between the two systems, each with 200 units produced, is 0.18 years. At 45 cents per liter, the difference reduces to 0.10 years. Similarly, the difference between producing 50 units and 200 units for the system with a 1.07 million dollar development cost is 0.7 years at a fuel price of 25 cents per liter, and 0.4 years at 45 cents per liter.

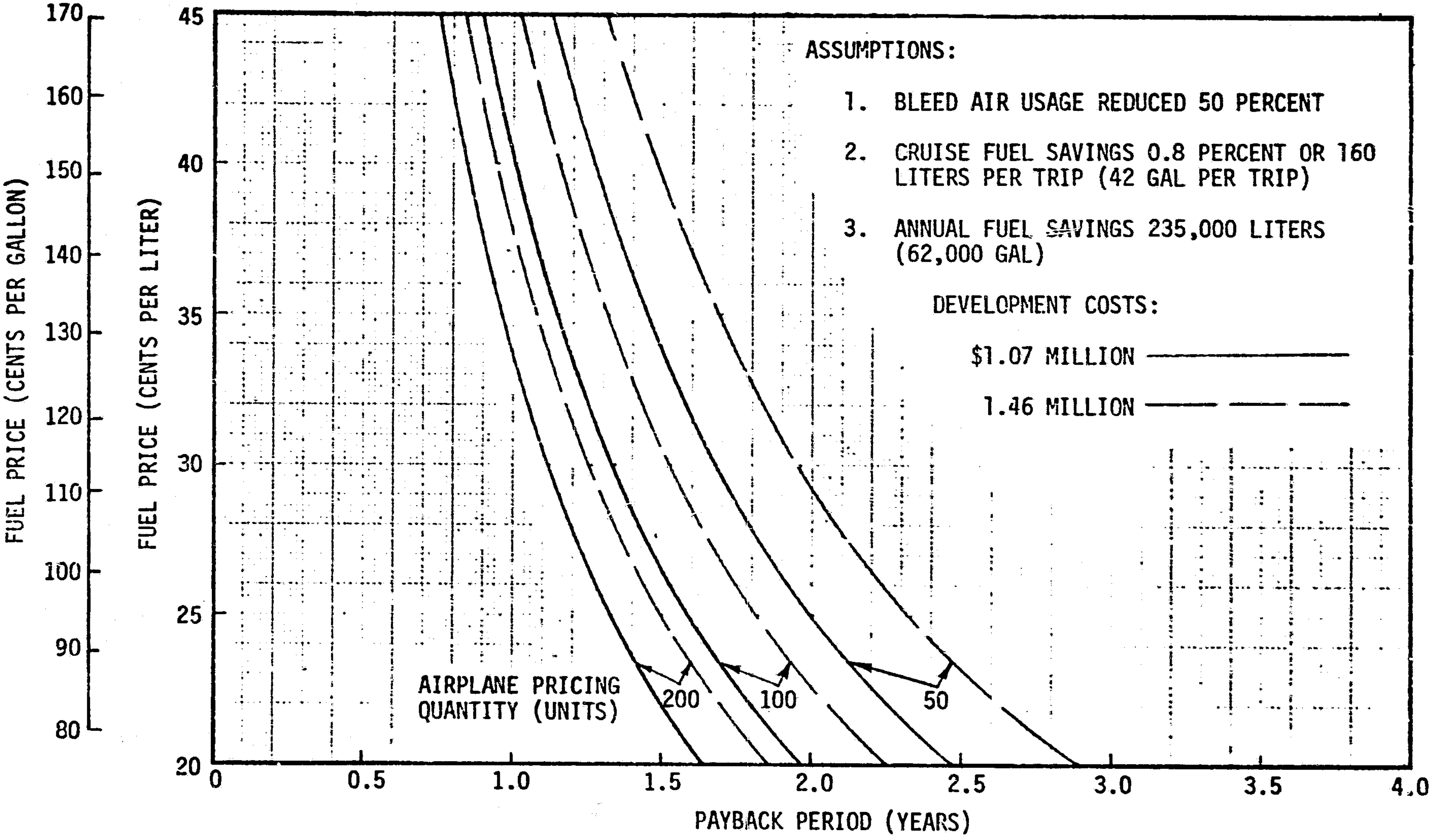

FIGURE 25. PAYBACK PERIOD FOR CABIN AIR RECIRCULATION SYSTEM

SECTION 8
CONCLUSIONS

Because the cost of fuel has risen drastically since the DC-10 airplane was designed (see figure 24), criteria and trade studies made at that time are no longer valid. In the case of cabin air conditioning, a high bleed air supply was justifiable because fuel prices at that time were 3.2 cents per liter (12 cents per gallon). Now that fuel costs have risen by a factor of 7 to 8, an air conditioning system that utilizes smaller quantities of engine bleed air, and thus provides significant fuel savings, is highly desirable. Such a system was designed and fabricated for the DC-10, and evaluated in revenue service by American Airlines, as a part of the NASA Engine Component Improvement Program.

This new cabin air conditioning system recirculates the air so as to reduce the requirement of fresh air obtained from engine compressor bleed. Air recirculation, long the rule in residences and commercial buildings, was found to be acceptable on the DC-10. The recirculation system proved to have several significant advantages over the existing system. The cruise fuel flow was reduced by 0.8 percent which amounts to a fuel savings of 235,000 liters (62,000 gallons)/year/airplane. Furthermore, the system reduces or prevents haze accumulation at the ceiling, raises cabin humidity, and lowers cabin ozone concentrations.

With these benefits, the new system is economically attractive to the airlines. For current fuel prices, a payback period as low as 1.3 years has been calculated.

APPENDIX A.
QUALITY ASSURANCE

INTRODUCTION

The Product Assurance Program applied to this contract is as defined in detail in the plan ACEE-18-PL-8511B dated 11 September 1978 and submitted in response to data requirements of Article XXI of the Contract Schedule and Exhibit B. These procedures are essentially the same as used on the DC-9 and DC-10 production programs. This product assurance system is in compliance with applicable requirements of Parts 21 and 37 of the Federal Aviation Regulations, with interfacing requirements of MIL-Q-9858A and MIL-C-45662, and with the requirements of NASA Lewis Research Center.

DOCUMENTATION

Operating procedures included in quality manuals and functional standards and guides, have provided direction for quality continuity from design and material procurement through fabrication, assembly, test, installation, and flight test of the cabin air recirculation system on the DC-10 aircraft. Douglas Process Standards which provide details processing and assembly instructions, material usage and quality requirements were used in the manufacture and acceptance evaluation of applicable parts made by the contractor and by outside sources.

Objective evidence shown on Fabrication Outlines (FO) and Assembly Orders (AO) are on file, verifying manufacturing comformity to design and process specifications. Verifications were made by Douglas engineers, quality assurance inspectors, and by FAA representatives.

Verifications of quality assurance control were recorded on the work instructions (Fabrication Outline, Assembly Order) issued to provide manufacturing sequence and a record of in-process inspections and tests.

Manufacturing and Quality Assurance Stamps were utilized on the foregoing documentations to substantiate the verification. The issuance and control of Quality Stamps is a responsiblity of the Quality Assurance organization.

The modified system, installed in one American Airlines DC-10 for evaluation purposes, will not be transferred to any other airplane. The system will be refurbished to standard design upon completion of evaluation. Components of the modified system are not compatible with standard design.

Components and the system are identified by part numbers and serial numbers as part of the configuration control system. Qualifying tests and characteristics are on file.

Design Engineering provided surveillance during the flight evaluation. The occurrence of any failures were to be reported in accordance with contractual requirements.

SUPPLIER CONTROL

Subcontractors on this contract were qualified on the basis of their quality systems, capabilities, and records of performance and cost. Their quality systems were under the surveillance of the Douglas Source Inspection System. Where source inspection was not imposed, supplier products were given a thorough receiving inspection at Douglas. Quality Assurance Planning verifed that purchase orders referenced applicable technical and quality assurance requirments.

DRAWING CHANGE CONTROL

The drawing change control system used by Douglas was utilized on this program. Quality Assurance verified that subsequent changes to released Engineering drawings were reflected on planning shop work instructions. Comformity inspection of the hardware to engineering and planning documentation was a part of the hardware acceptance process.

INSPECTION AND TESTS

Inspection and tests were conducted in accordance with applicable specifications and quality requirements. Quality Assurance personnel witnessed all component and system tests. Specific articles used on this program were accepted based on completed flight qualification tests of similar type articles for other programs.

Equipment utilized for testing on this program is a part of the Equipment Recall Data System (ERDS), which is a computerized control system for the calibration and recertification of equipment at prescribed intervals. All instrumentation utilized was serialized and calibrated in accordance with certified standards traceable to the National Bureau of Standards.

Engineering, Source Inspection and FAA representatives witnessed supplier conducted qualification tests on components developed for this program. Quality Assurance and FAA representatives verified conformity of the installation to design specifications. Quality Assurance witnessed the ground and in-flight functional testing which was in accordance with specified engineering and quality requirements.

NON-CONFORMING ARTICLES - MATERIAL REVIEW

Nonconforming articles were dispositioned by a Material Review Board consisting of engineering and quality assurance representatives. Agreement by the MRB members was necessary in the resolution of nonconformances. The MRB activity was subject to review and approval by the FAA.

There were no major nonconformances. Minor nonconformances were corrected and appropriate corrective action imposed.

APPENDIX B

QUESTIONNAIRE

DC-10 CABIN AIR RECIRCULATION EVALUATION (N132)

(PLEASE COMPLETE ON EACH FLIGHT LEG, CONDITIONS PERMITTING)

FLIGHT NO. ____________ FROM ____________ TO ____________ DATE ____________

DEPARTURE STA. OAT ____________

NO. PASSENGERS: 1st CLASS ____________ COACH ____________

SMOKING SECITONS: ROWS ________ TO ________ ROWS ________ TO ________

PACK/RECIRCULATION FANS

	PACK FLOW												RECIRC FANS					
	NO. 1				NO. 2				NO. 3				FWD		MID		AFT	
	OFF	NORM	LOW	IND POS.	OFF	NORM	LOW	IND POS.	OFF	NORM	LOW	IND POS.	OFF	ON	OFF	ON	OFF	ON
BEFORE DEPARTURE																		
CLIMB																		
CRUISE																		
DESCENT																		

CABIN VENTILATION/TEMPERATURES

	CABIN VENTILATION							CABIN TEMPERATURE							† WATER DRIPPAGE
		UNSATISFACTORY							UNSATISFACTORY						
									WARM			COLD			
	SATIS-FACTORY	STUFFY	DRAFTS	SMOKE HAZE	ODORS	* LOCAL	GEN'L	SATIS-FACTORY	F	M	A	F	M	A	
BEFORE DEPARTURE															
CLIMB															
CRUISE															
DESCENT															

* AREA OF CABIN ____

† AREA OF CABIN ____

COMMENTS: (RE: FAN NOISE, PRESSURE CONTROL, WINDOW FOGGING & ETC.)

____

____

BOARD MAIL TO "ACFT. SYST. ENGRG – MAIL DROP 208 – TULE"

11-1-79

PAGE 70 INTENTIONALLY BLANK

REFERENCES

1. Fasching, W. A., "CF6 Jet Engine Performance Improvement Program - Task 1, Feasibility Analysis," General Electric Co., Cincinnati, Ohio, R79AEG295, March 1979. (NASA CR-159450)

2. Gaffin, W. O., and Webb, D. E., "JT8D and JT9D Jet Engine Performance Improvement Program - Task 1, Feasibility Analysis," Pratt & Whitney Aircraft Group, East Hartford, Conn., PWA-5518-38, April 1979. (NASA CR-159449)

3. SAE Committee AC-9, Aircraft Environmental Systems, SAE Aerospace Applied Thermodynamics Manual, Society of Automotive Engineers, New York, 1960.

4. Perkins, P. J., Holdeman, J. D., and Nastrom, G. D., "Simultaneous Cabin and Ambient Ozone Measurements on Two Boeing 747 Airplanes, Volume I," Federal Aviation Administration, Washington, D.C., FAA-EE-79-05, July 1979. (NASA TM-79166)

PAGE 72 INTENTIONALLY BLANK