https://ntrs.nasa.gov/search.jsp?R=19820024503 2020-03-21T06:17:03+00:00Z

N O T I C E

THIS DOCUMENT HAS BEEN REPRODUCED FROM MICROFICHE. ALTHOUGH IT IS RECOGNIZED THAT CERTAIN PORTIONS ARE ILLEGIBLE, IT IS BEING RELEASED IN THE INTEREST OF MAKING AVAILABLE AS MUCH INFORMATION AS POSSIBLE

NASA Contractor Report 159281

COST AND BENEFITS DESIGN OPTIMIZATION MODEL FOR FAULT-TOLERANT FLIGHT CONTROL SYSTEMS

Boeing Commercial Airplane Company
P.O. Box 3707
Seattle, Washington 98124

Contract NAS1-15506
September 1980

(NASA-CR-159281) COST AND BENEFITS DESIGN OPTIMIZATION MODEL FOR FAULT TOLERANT FLIGHT CONTROL SYSTEMS Contractor Final Report, Sep. 1980 (Boeing Commercial Airplane Co., Seattle) 251 p HC A12/MF A01 CSCL 01C G3/08

N82-32379

Unclas
31519

National Aeronautics and Space Administration

Langley Research Center
Hampton, Virginia 23665

FOREWORD

This report terminates NASA-Langley Contract NAS1-15506 for preliminary development of a Cost and Benefit Design Optimization Model for fault-tolerant flight control systems (FTFCS). The work consisted of three tasks:

1. Review of existing modeling methods that might be appropriate for fault-tolerant system optimization

2. Development of requirements for a fault-tolerant system optimization model

3. Development of an optimization model specification

The work was conducted from October 1978 through December 1979, under the NASA Technical Monitor, Mr. A. H. Lindler. Study participants and their areas of contribution were:

T. P. Enright, Program Manager
J. Rose, Principal Investigator
R. C. Fairfield, FTFCS Definition
P. Nagel/D. M. Rose, Reliability Model Review
A. N. Pozner/F. Scholz, Combinatorial Analysis
J. W. Wassal/D.L. Streiffert, SIMSCRIPT Simulation
L. B. Shepard, Airline Operational Definitions
M. J. Healy, Optimization Methods
A. P. Zob, Airplane Scheduling Methods
United & Delta, Requirement and Specification Review

CONTENTS

		Page
1.0	SUMMARY	1
2.0	INTRODUCTION	3
3.0	ABBREVIATIONS AND ACRONYMS/IDENTIFIED COSTS AND BENEFITS	5
4.0	MODEL REQUIREMENTS	7
4.1	Fault-Tolerant Design Options	7
4.2	Available Models	8
4.2.1	Reliability Models	8
4.2.2	Operational and Maintenance Models	9
4.2.3	Economic Analysis	10
4.2.4	Airplane Performance	10
4.2.5	The Miller Model	10
4.2.6	Optimization	10
4.3	Model Requirement (Description and Rationale)	11
4.3.1	Design Evaluation	11
4.3.2	Design Optimization	11
4.3.3	Adaptability	12
4.3.4	Validation	12
4.3.5	Ease of Change	12
4.3.6	Risk Analysis	12
5.0	MODEL SPECIFICATION	13
5.1	Equipment Description	15
5.1.1	Evaluation Scenario	15
5.1.2	Operations and Maintenance Simulation	15
5.1.3	Economic Analysis	17
5.1.4	Optimization	18
5.1.5	Model Simplification	19
5.2	Operations and Maintenance Simulation	21
5.2.1	Airplane Scheduling	22
5.2.2	Substitution and Cancellations	27
5.2.3	Line Maintenance and Repair	28
5.2.4	FTFCS Equipment Definition and Failure Status Recording	34
5.2.5	Removal-Generator for the Operations and Maintenance Simulation	38

PRECEDING PAGE BLANK NOT FILMED

		Page
5.3	Analysis of Investment and Operating Economics	39
5.3.1	Cost and Benefit Measurement Parameters	40
5.3.2	Investment Cost Definitions	43
5.3.3	Operating Cost Definitions	46
5.3.4	Tax Adjustments	63
5.3.5	Retirement Costs and Credits	65
5.3.6	Operating Benefits	65
5.3.7	Economic Risk Analysis	66
5.4	Optimization	67
5.4.1	The Optimization Problem	67
5.4.2	Response Surface Conditioning	68
5.4.3	Simplex	70
5.4.4	Application of Simplex	73
5.4.5	Sensitivity Analysis	75
6.0	AIRLINE REVIEW	76
6.1	Delta Airlines' Review	76
6.2	United Airlines' Review	77
7.0	RECOMMENDATIONS FOR PHASE II	79
7.1	Phase II Objectives	79
7.2	Phase II, FTFCS Operation and Maintenance Simulation	79
7.2.1	Computer System Design (Simulation and Economic Analysis)	79
7.2.2	Computer Program Design	79
7.2.3	Program Testing	80
7.2.4	First Model Validation	80
7.3	Optimization	80
7.3.1	Exploratory Studies	80
7.3.2	Final Programming	81
7.3.3	Second Model Validation	81
7.4	Data Collection and Analysis	81
7.4.1	Delay and Cancellation Data Collection	81
7.4.2	Repair Shop Data	81
7.4.3	Retirement Costs and Credits	81
7.5	Preliminary Sensitivity Study	81
7.6	Model Implementation	81
8.0	REFERENCES	82

Page

APPENDIXES

I.	Maintenance Letter-Check Definitions	I-1
II.	Airline Cost Estimation System ACES	II-1
III.	Airline Ops. and Maintenance Model AS3031	III-1
IV.	An Evaluation of the Miller Model	IV-1
V.	Reliability Considerations	V-1
VI.	Typical SIFT, FTMP, and FTFCS Concepts	VI-1
VII.	Avionics Repair Shop Simulation	VII-1
VIII.	Replicated System Component Removals	VIII-1
IX.	Hypothetical FTMP Cost and Benefit Analysis	IX-1
X.	Partition Theory for Counting Possible Packaging Schemes	X-1
XI.	Derivation of Delay and Cancellation Cost (abstract from Reference 21, D6-40895-1)	XI-1

FIGURES

No.		Page
1	Critical Functions for Fault-Tolerant Flight Control Systems (Hypothetical Airliner)	7
2	Elements of the Overall Model	13
3	Simplified Cost Benefit Optimization Model	14
4	The Analysis and Optimization Method	19
5	Production of Simulation Itineraries and Schedules	23
6	Sample of Partial Tours in Output from Route Generator	24
7	Computational Procedure for Route Cycle Generation	24
8	Algorithm for Linking Partial Tours	26
9	Algorithm for Determining Fleet Size $N_i(0)$	27
10	Typical Line Station Logic	30
11	Repair Shop Logic	33
12	Physical and Functional Component Sets	36
13	Example of Simulation Record Keeping	37
14	Comparison of FTFCS State and Specified Dispatch Requirements	38
15	Risk Analysis	66
16	Separate Effects of $g(x)$ and $h(x)$	69
17	Combined Effects of $f(x) = g(x) + h(x)$	69
18	Optimization Procedure	71
19	Flow Chart for Simplex Method	72
20	Basic Simplex Operations	73
21	Simplex in 3-Dimensional Configuration Space	74

PRECEDING PAGE BLANK NOT FILMED

TABLES

No.		Page
1	Multiplier Factors to Convert Stable Maintenance Costs to Cost per Hour During Each Year	20
2	Sample Airplane Itinerary for Day 1	28
3	Investment Decision Alternatives	40
4	Material Inflation Percentage	44
5	Material Stock Levels	45
6	Base Pay Per Labor Hour	48
7	Material Inflation Factors	49
8	Cost of Additional Airplane Weight Based on 3000 Flight Hours/Year	54
9	Mission Summary	55
10	Standard Airplane Seating	56
11	Flight Hour/Flight Cycle Failure Factors by ATA System for a 1-Hour Flight	57
12	Pilot and Copilot Pay Inflation Factors	58
13	Tax Depreciation Schedule	64

1.0 SUMMARY

Fault-tolerant systems have the potential for providing the high levels of reliability necessary for airplane flight-critical and flight-critical functions. This report addresses the problem of selecting the most cost-effective fault-tolerant system from the many system alternatives. The objectives of the study, therefore, were to determine the means of evaluating alternative configurations of a fault-tolerant system operating in different commercial airline environments and to develop a method of optimizing their design characteristics for a given environment. A set of requirements for an optimization model was developed, and the models that could potentially satisfy these requirements were reviewed. No single model was found capable of performing the required analysis. However, several existing models can be modified and combined to provide most of the required optimization capability.

The proposed, combined model is one that simulates as closely as possible the operation of fault-tolerant systems in airline service. The model will simulate real-world airline operations and generate statistics on operating benefits and penalties, labor and material resources expended, and the resulting economic advantages and penalties. Since many dependent variables are involved in such analyses, careful selection of an optimization method was necessary. The report provides details of the optimization technique selected and details of the algorithms to be used throughout the model. Airline review of the model was solicited, and many of the comments received were embodied in the model.

2.0 INTRODUCTION

Digital system technology is growing rapidly, and the advent of large-scale integration (LSI) components is providing the ability to automate complex control functions. This document addresses the problem of evaluating cost effectiveness and selecting the appropriate fault-tolerant flight control systems (FTFCS). The selection is complicated by the numerous design configurations that have become available as a direct result of the increasing versatility and relatively low procurement costs of the system components. The objective of this study was to create the capability to evaluate the effect of an aircraft FTFCS on commercial airline operations and to use this capability in tradeoff studies to optimize FTFCS design.

This document describes the work accomplished on NASA Contract NAS1-15506 as Phase I of a possible three-phase NASA program. The purpose of Phase I was to evaluate existing and new modeling methods and, based on this evaluation, to develop model requirements and specifications for a Cost Benefit Design Optimization Model (CBDOM). The approach for completing the work needed to develop model requirements and specifications was as follows:

1. Make a literature search for available models capable of performing a part or all of the required functions for Cost Benefit Optimization.

2. Become familiar with fault-tolerant flight control concepts that might be conceived in the 1980-1990 time period to ensure that the model developed can be used to analyze potential flight control concepts.

3. Develop a set of model requirements.

4. Develop a model specification.

5. Document the critical assumptions and rationale on which the requirements and specifications are based.

Since there is no way of testing the validity of many potential simplifying assumptions, the model developed is initially a very comprehensive one. However, once results become available, it will be possible to determine the important parameters and make valid simplifications in the interests of economy.

The model design provides an ability to simulate the operation of FTFCS in typical or actual airline scenarios, the latter being important for model validation. Although there was no question of the ability to use the completed model for evaluation of given design concepts, it was necessary to devote considerable effort to the problem of optimization. A pattern search method was selected as the only practical method of optimization. The amount of design optimization that can be performed is a function of how efficiently the model can be programmed. An efficient program will facilitate the optimization of the amount of replication to be used. The determination of the best equipment packaging design has also been examined and represents a very large optimization study, depending not only on an efficient program, but also on a sizable amount of computer time.

Since program efficiency is important, SIMSCRIPT was selected as the best of several possible programming languages for the simulation portion of the model. SIMSCRIPT is compatible with FORTRAN, which is the language for other portions of the model partially in existence; namely, the economic analysis and search technique.

PRECEDING PAGE BLANK NOT FILMED

Possible use of the model by airlines for examination of the potential benefits of FTFCS was a consideration in developing the specification.

Finally, the model requirements and specification were reviewed by both Delta and United Airlines at their draft stage and found to be acceptable in both the methods of maintenance and economic analysis.

3.0 ABBREVIATIONS AND ACRONYMS

ACES	Airline Cost Estimating System
ACSYNT	Aircraft Synthesis Program
AFTI	Advanced Flight Technology Integration
AS3031	comprehensive simulation of a commercial airplane operation
ATE	automatic test equipment
CAB	Civil Aeronautics Board
CARE	Computer-Aided Reliability Analysis
CARSRA	Computer-Aided Redundant System Reliability Analysis
CBDOM	Cost and Benefit Design Optimization Model
CLP	lease payments
EROI	extra return on investment
FAA	Federal Aviation Administration
FCD	fuel consumed because of drag
FCR	fuel cost reductions
FICA	federal payroll taxes
FIFO	first in first out
FMC	flutter mode control
FORTRAN	Formula Translation--a programming language
FPS	foot, pound, second units
FTFCS	fault-tolerant flight control system(s)
FTMP	Fault-Tolerant Multiprocessor
GASP	a simulation programming language
GLA	gust load alleviation
GOALS	General Operation and Logistics Support Model
GPSS	General Purpose Simulation System
HFCS	Hypothetical Flight Control System
IAAC	Integrated Application of Active Controls
IBM	International Business Machines
INC	Federal and State income tax
IO	input, output
IRS	Internal Revenue Service
ITC	investment tax credit
KMS	kilogram, meter, second units
LAS	lateral-augmented stability
LIFO	last in first out
LRU	line-replaceable unit
LSI	large-scale integration
MARR	minimum attractive rate of return
MLC	Maneuver Load Control
MOVES	Marine Operational V/STOL Environment Simulation
NRC	net retirement credit
OAG	Official Airline Guide
OB	operating benefits
O&M	operations and maintenance
ORLA	Optimum Repair Level Analysis
PAS	pitch-augmented stability
PASCAL	a programming language
ROI	return on investment or rate of return
SIFT	Software Implemented Fault-Tolerant System
SIMSCRIPT	a high-level simulation language
SRI	Stanford Research International

TA	tax adjustments
TCB	total costs and benefits
TDA	tax depreciation allowance
VDEP	Vehicle Design Evaluation Program
V/STOL	Vertical or Short Takeoff and Landing

IDENTIFIED COSTS AND BENEFITS

		Page
IC	Investment Cost	43
ICAP	Airplane Parts Procurement and Installation	43
ICRS	Rotatable Spares Investment	44
ICES	Expendable Spares Investment	44
ICGS	Ground Support Equipment	46
ICST	Special Tools and Test Equipment	46
ICTM	Training Equipment	46
OC	Operating Cost	46
MLL	Maintenance Line Labor	47
MSL	Maintenance Shop Labor	48
MM	Maintenance Materials	48
SSC	Shop and Servicing Supplies	49
MB	Maintenance Burden	49
OS	Outside Services	51
MT	Maintenance Training	52
FCT	Flight Crew Training	52
SH	Spares Holding Cost	52
FCR	Fuel Cost Reductions	53
DC	Delay Costs	56
CN	Cancellation Costs	59
DT	Diversion and Turnback Costs	59
CDS	Debt Servicing	60
CLP	Lease Payments	61
TCE	Equipment Transportation Cost	62
TA	Tax Adjustments	63
ITC	Investment Tax Credit	63
TDA	Tax Depreciation Allowance	64
INC	Federal and State Income Tax	65
NRC	Net Retirement Credit	65
OB	Operating Benefits	65

ORIGINAL PAGE IS
OF POOR QUALITY

4.0 MODEL REQUIREMENTS

To ensure that any model developed will accommodate all fault-tolerant flight control system (FTFCS) options, the Contractor reviewed and considered models, data, FTFCS designs, active controls options, reliability models, and airline operations and costs. This section summarizes the review, including fault-tolerant design options (sec. 4.1), available models (sec. 4.2), and model requirements (sec. 4.3), and the requirements generated by this review.

4.1 FAULT-TOLERANT DESIGN OPTIONS

The options examined in this study range from the application of advanced navigational concepts through the development of active flight controls. Although they cover a wide range of concepts, they were similar in their design features, which require high reliability of software, firmware, or hardware for successful operation. An example of one such project is the Integrated Application of Active Controls (IAAC) airplane that is a part of the NASA Energy Efficient Transport Program. The IAAC project seeks to improve fuel economy by reducing weight and drag using such concepts as:

- Fly-by-Wire
- Relaxed Static Stability
- Gust and Maneuver Load Alleviation (GLA)
- Flutter Mode Control (FMC)

Control surfaces to implement these features are shown in Figure 1. Such concepts can be flight crucial and may be flight critical. A flight-crucial function is any

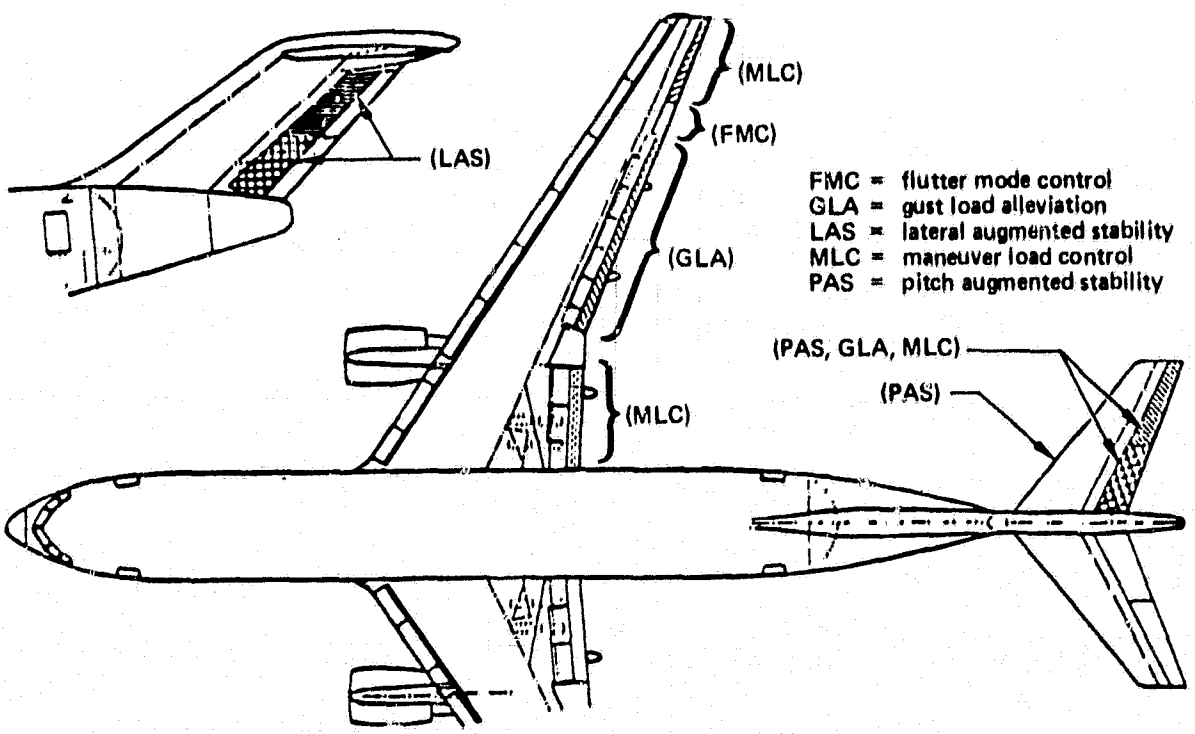

Figure 1. Critical Functions for Fault-Tolerant Flight Control Systems (Hypothetical Airliner)

function that, by its complete loss, causes an immediate unconditional flight safety hazard. A flight-critical function is any function that, by its complete loss, results in a potential flight safety hazard that can be averted by appropriate flight crew actions. Of the current active flight control options being considered, only pitch-augmented stability (PAS) is flight crucial. The potential use of digital computers for navigation, fuel management, systems management, and other critical and noncritical functions provides the possibility of incorporating fault tolerance in other systems. Fault tolerance, the ability to sustain a failure without degradation of function, can be achieved by using online spares or by shedding nonessential load(s) when a failure occurs. In this way, surplus computation capacity can be used to replace failed FTFCS stages. Using such concepts, fault tolerance provides a method of achieving safe flight control systems with the potential for very high reliability.

The features of failure detection and recovery, which are inherent in the design of fault-tolerant systems, are achieved in contemporary design concepts by means of replication, voting, and reconfiguration. The relatively low cost of digital components is now making replication and massive redundancy economically possible and represents a new concept for control system technology. However, the failure detection and recovery features that make fault tolerance possible also make both reliability and cost benefit optimization more complicated than for conventional systems.

To develop a Cost and Benefit Design Optimization Model (CBDOM) that can accommodate the potential fault-tolerant systems developed during the 1980s, the components, software, firmware, and architecture that might be used were identified. Several concepts were then reviewed in depth, including an Advanced Flight Technology Integration (AFTI) airplane and two alternative flight control computer concepts currently being designed under a NASA-funded contract. The NASA systems are the Software Implemented Fault-Tolerant (SIFT) system[1] being developed by Stanford Research International (SRI) in collaboration with Bendix, and the Fault-Tolerant Multiprocessor (FTMP)[2] under development by Charles Stark Draper laboratories and Collins Radio. Typical SIFT and FTMP concepts and AFTI are described in Appendix VI.

4.2 AVAILABLE MODELS

Available models that might be used for evaluation and optimization of FTFCS designs were identified so that requirements for a new model could be tailored for existing model compatibility. Several models were reviewed in detail, including reliability (sec. 4.2.1), operational and maintenance (sec. 4.2.2), economic analysis (sec. 4.2.3), performance (sec. 4.2.4), the Miller model (sec. 4.2.5), and optimization (sec. 4.2.6).

4.2.1 Reliability Models

Five reliability models were reviewed; details are provided in Appendix V. Of the five reliability models, Computer-Aided Reliability Analysis (CARE III)[3] appears to be the most promising approach, with Computer-Aided Redundant System Reliability Analysis (CARSRA) as a possible approach if it were further developed. CARE III has the ability to handle nonconstant hazard rates, transient fault recovery, complex success-path definition with replicated and switched stages, coverage, and latent failure modeling. CARSRA is a FORTRAN-programmed Markov model, developed to facilitate the reliability assessment task for fault-tolerant, reconfigurable systems. It has been used by the Contractor on several occasions and has given comparable results on simple analyses that can be checked by other means. However, the documentation for CARSRA[4] and the FORTRAN code, which was available to the Contractor, does not

provide sufficient detail or comments to ensure full understanding of the model algorithms. Work would be required to document CARSRA and increase its analysis capacity before it could be considered for use in design optimization.

Finally, as part of Phase I, a reliability simulation was developed in SIMSCRIPT for a simplified fault-tolerant system; it is detailed at the end of Appendix VIII. Complex systems can certainly be modeled in a similar way, and the computer programming involved is minimal compared to developing a general-purpose model such as CARE III. However, for a simple system, the computer running time is on the order of 15 seconds for 10^9 simulated system operating hours. The simulation of simultaneous failures with a very low probability of occurrence would require 10^{12} simulated system operating hours or more to accumulate a statistically-adequate estimate of system reliability. Thus, a computer run designed to simulate failures, including simultaneous failures for a simple system configuration, could involve 4 or 5 hours of Cyber 175 computer time. This time would increase for larger, more complex systems.

4.2.2 Operational and Maintenance Models

Operational modeling is defined in this document as the development of mathematical models of the events (excluding maintenance) that impact the costs and benefits of fault-tolerant systems during typical or specific airline use. The operational model determines the degradation of fault-tolerant systems that occurs, the time available for maintenance, and the consequence of inadequate maintenance. Maintenance is defined as inspection and total or partial restoration of degraded equipment. Both operations and maintenance are stochastic processes.

A search was made for simulations capable of modeling the operation and maintenance of fault-tolerant systems.

AS3031 is a comprehensive simulation of commercial airplane operation and maintenance that provides many of the features necessary to evaluate fault-tolerant systems. AS3031, which is fully described in Appendix III, has only some of the features required to evaluate fault-tolerant systems. For instance, equipment repair is not simulated and different mechanic skill levels are not recognized. Rationale for requiring such features is as follows:

- The ability to add replication to an FTFCS enables maintenance to be deferred and delays avoided at some added investment in FTFCS equipment. In turn, delaying maintenance until it is convenient allows centralized rather than dispersed maintenance. The ability to optimize such maintenance strategies is probably important and requires the detailed modeling of repair.

- On existing flight-critical and flight-crucial systems, Federal Aviation Administration (FAA) Advisory Circulars 120-28B[5] and 120-29[6] require initial and recurrent training of personnel used in the maintenance of Category II and III landing equipment. It is anticipated that similar requirements will pertain to FTFCS and will require a limited number of mechanics with specialized skills.

The General Operation and Logistics Simulation Support (GOALS) model[7] provides for simulation of operations and maintenance of military airplanes. GOALS was developed for organizational maintenance simulation and will not handle a network of stations and repair shops that is necessary for commercial operation. Written in General-Purpose Simulation System (GPSS) for an International Business Machines

(IBM) computer, GOALS requires a core storage allocation of 470K bytes, which is a large program.

Marine Operational V/STOL Environment Simulation (MOVES)[8] was developed by the Navy to simulate carrier-based or land-based operation and maintenance. Like GOALS, it will not handle a network of stations and is also written in GPSS. However, the repair routines are very comprehensive and have a logic similar to that needed for commercial airplane operation.

The Mod III Level of Repair model is an Optimum Repair Level Analysis (ORLA) model developed as a part of the Naval Air Systems Command Project Explore. While Mod III represents state of the art in ORLA, it will only handle a given design configuration, and the problem of design for repair has not been tackled. Mod III is written in SIMSCRIPT (a high-level simulation language).

4.2.3 Economic Analysis

Previous work by the Contractor had established that only one model existed that identifies and isolates cost categories at a level suitable for commercial airplane equipment cost analyses and evaluations. This model, the Airline Cost Estimating System (ACES), is written in FORTRAN and requires some modifications so that it can accept input from a maintenance and operations simulation. ACES would also be required to perform cost benefit analyses, rather than just cost comparisons. Cost benefit analysis is required to conveniently handle the evaluation of a single fault-tolerant system configuration. See Appendix II for a description of ACES.

4.2.4 Airplane Performance

Weight and drag predictions, which are required to assess the costs and benefits associated with a given system design, require the capability of calculating fuel burned for a given flight plan. The two performance prediction models reviewed by the Contractor were Aircraft Synthesis Program (ACSYNT)[9] and Vehicle Design Evaluation Program (VDEP)[10]. Both models appear too large in scale to be incorporated in the CBDOM, but could be reviewed more thoroughly to determine if parts of them could be used in the future. As a recourse, tabulated performance values in the CBDOM could be used, such as those provided in Section 5.3.3 (FCR—fuel cost reductions). Such values will be available from NASA studies like the IAAC (Contracts NAS1-14742 and NAS1-15325).

4.2.5 The Miller Model

The work to develop a maintenance model for K-out-of-N subsystems, performed by D. R. Miller[11], is extensively reviewed in Appendix IV. It confirms the desirability of using simulation to solve the various problems associated with operating and maintaining complex airplane systems.

4.2.6 Optimization

The available optimization techniques can be divided into three groups: Heuristic and Pattern Search, Integer and Dynamic Programming, and Conjugate Direction Methods. The number of different methods is indicative of the difficulty of performing optimizations and the variety of optimization problems. Of the techniques reviewed, the direct-search Simplex method of Spendley, Hext, and Himsworth[12] and Nelder and Mead[13]

seems most appropriate. Further discussion of their methods is provided in Section 5.4.

4.3 MODEL REQUIREMENT (DESCRIPTION AND RATIONALE)

Having considered typical systems to be optimized and models available to do the job, the following set of requirements for a CBDOM was developed. The requirements are described first, then the rationale.

4.3.1 Design Evaluation

Requirement--The CBDOM should be capable of evaluating alternative design concepts of fault-tolerant systems, including computers, software, firmware, sensors, actuators, and data buses required for noncritical, critical, and crucial flight control surfaces.

Rationale--The ability to assess the costs and benefits associated with different design configurations enables the best design alternative to be selected. Also implied is the ability to use the model in a series of tradeoff studies so that a designer can attempt to optimize the design.

4.3.2 Design Optimization

Requirement--The CBDOM should be capable of optimizing design.

Rationale--Many design alternatives are possible within a given system concept and can significantly affect costs and benefits. Primary examples of design alternatives are the amount of replication and the packaging arrangements used. While the number of alternatives for the former are bounded by safety requirements and are therefore small, no such convenient boundary exists for the latter, packaging. For example, Appendix X shows that while three components can be packaged in five ways, six components can be packaged in 233 ways. Subsequent increases are even more dramatic. Packaging affects costs associated with spares, repair, and reliability (reliability being degraded by increasing numbers of connectors as the number of components to a module becomes smaller). It is unlikely that a designer could truly optimize a representative system by comparing the results of a series of tradeoff studies, other than by accident. The above translates into a subset of requirements (listed below) that the CBDOM should provide the capability to optimize in terms of airline profitability.

- The levels of redundancy, voting, and replication that should be provided
- The types and reliability of components and software that are economically advantageous
- The optimum packaging for hardware and software
- The optimum maintenance plan:
  - Condition monitoring versus periodic maintenance
  - Repair versus discard
  - Locations at which replacement or repair should be performed (i.e., at line stations, base station, or supplier)

- The quantities and locations in which spare units should be stocked

4.3.3 Adaptability

Requirement--The model should be capable of adaptation so that airlines, and avionics and airframe manufacturers can perform cost-of-ownership analyses for avionic component design, and operation and maintenance studies.

Rationale--As far as can be established, the proposed model fills a gap in the analytical tools available not only for design, but also for establishing profitable operation of flight control and other airplane systems of similar complexity and importance.

4.3.4 Validation

Requirement—The CBDOM should be capable of being validated.

Rationale--The rationale for this requirement is obvious, and its implementation is addressed in Sections 7.2 and 7.3.

4.3.5 Ease of Change

Requirement—The CBDOM should be capable of being readily changed.

Rationale--As well as satisfying the requirement for adaptability by manufacturers and airlines, the CBDOM model development will be evolutionary. Once a comprehensive model is validated, it will be possible to make simplifications that can be checked for their effect on the results of an optimization. Conversely, it must be possible to check the validity of simplifications provided in the interests of economy.

4.3.6 Risk Analysis

Requirement—It should be possible to determine the cost consequences of errors in estimates, both in input to and output from the model.

Rationale—Since much of the data used as input to the model will be based on limited amounts of interpolated or extrapolated historical data, the ability to establish the sensitivity of the design to errors in model input and approximations within the model is a requirement, although one that may not be easily satisfied.

5.0 MODEL SPECIFICATION

The Cost and Benefit Design Optimization Model (CBDOM) consists basically of five parts and will have functions described in sections corresponding to the numbered blocks of Figure 2. In the CBDOM, a reliability calculation is not included. As previously stated, Computer-Aided Redundant System Reliability Analysis (CARSRA) was rejected for two major reasons: its inability to handle large problems and the lack of documented information describing the theoretical basis of the model. The alternative choice, Computer-Aided Reliability Analysis (CARE) III, which was selected based on information from preliminary details[3], appears to be suitable for integration in the CBDOM, but will not be available for some time. No other suitable model was found.

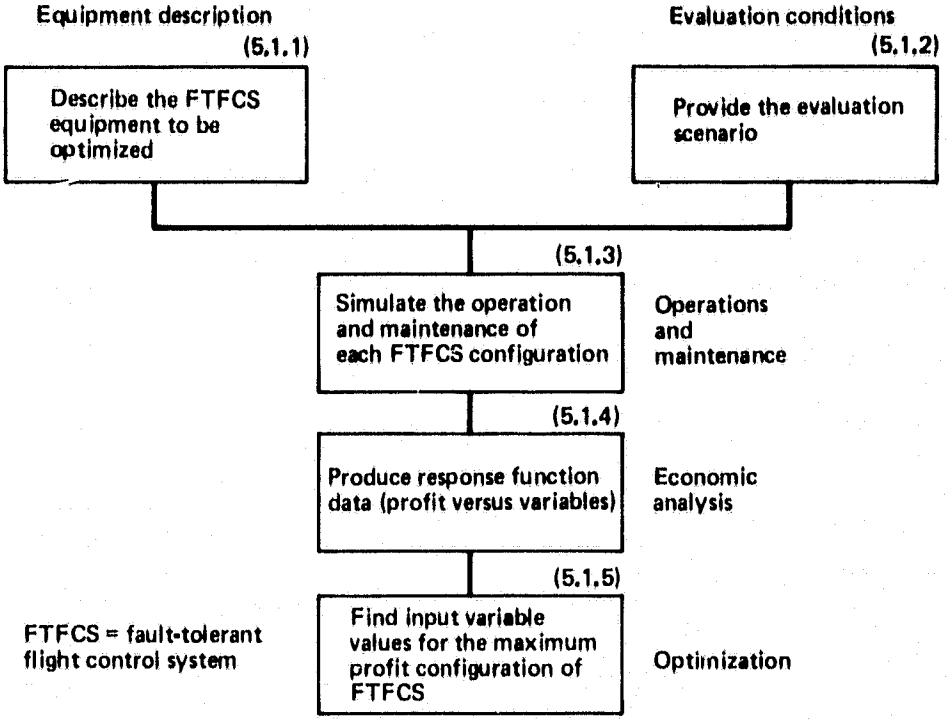

Note: Numbers in parentheses correspond to document subsections.

Figure 2. Elements of the Overall Model

Given these limitations, the following procedure for using CBDOM is proposed:

1. The user must establish the weight, drag, and fuel savings associated with the desired fault-tolerant flight control system(FTFCS) configurations. Fuel savings must be expressed as a function of flight length.

2. The user must determine the dispatch minimum complement for each type of component in the system using a reliability prediction program such as CARE III[3].

3. When provided with details of the design and operating environment, the CDBOM will increase the number of components beyond the dispatch minimum complement until a cost-optimized system is achieved using a Nelder and Mead simplex search technique, described in Section 5.4 and Reference 13.

4. The user must ensure that replication has not increased to a level where safety has been impaired by an increased probability of simultaneous failures due to the increased amount of software, firmware, and hardware.

To the above procedure, a "failure generation" module in the operations and maintenance (O&M) simulation portion of the CBDOM must be included that had not been originally planned. A simple combinatorial algorithm was considered and is more fully discussed in Section 5.2.5. The proposed CBDOM, shown in Figure 3, could be expanded to include CARE III or parts of an airplane design program such as Aircraft Synthesis (ACSYNT)[9].

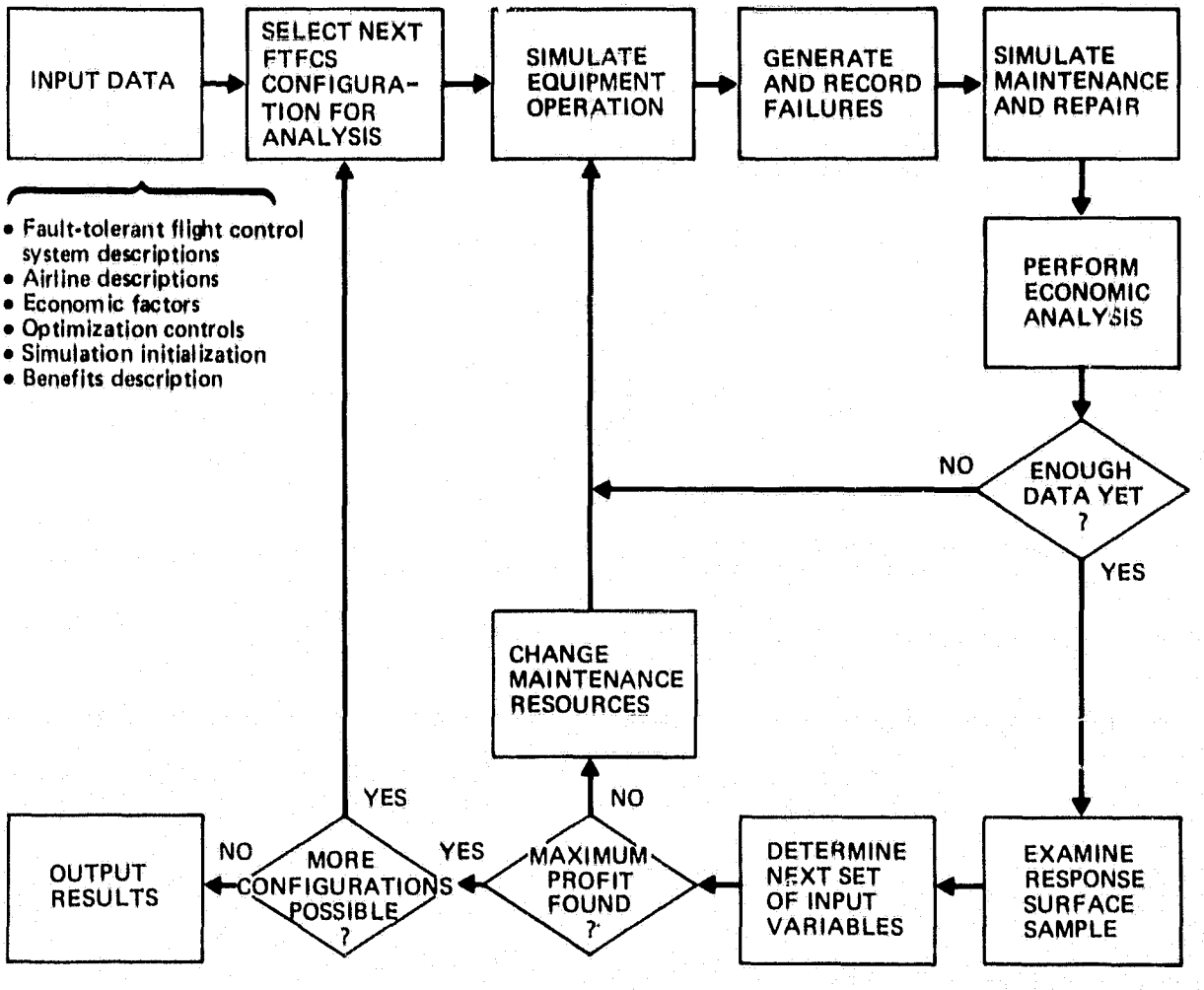

Figure 3. Simplified Cost Benefit Optimization Model

5.1 EQUIPMENT DESCRIPTION

Part of the model accepts and contains the user-supplied configuration description. For a given range, this description defines the reliability and maintainability characteristics of software, firmware, and components that form a stage. Other user inputs are the acceptable combinations of stages that form line-replaceable units (LRU); dependencies among components, stages, and LRUs; the dispatch-critical components; and the turnback and diversion complement of each defined component. Characteristics of non-FTFCS equipment that compete for the same maintenance facilities as the FTFCS must also be defined, but are fixed from an optimization standpoint. Further information on the link lists used for design definition is provided in Section 5.2.4. An experimental PASCAL program was developed to demonstrate that the recordkeeping function can be performed while simulation of failures is in progress.

5.1.1 Evaluation Scenario

Part of the model accepts and contains the operating conditions to optimize the FTFCS design. These conditions are: (1) a description of airplane schedules, fleet size, and route structure; (2) the initial location of maintenance resources; and (3) the number of shifts to be used. Economic analysis constants (such as wage rates, the price of fuel, and inflation rates) are built into the model, but will change with an overriding user input.

5.1.2 Operations and Maintenance Simulation

A Monte Carlo simulation is the preferred, if not the only, means of predicting FTFCS operating costs. The rationale for using the Monte Carlo simulation instead of a closed-form analysis method is provided in the following paragraphs of this section.

Approximate analyses of a hypothetical fault-tolerant multiprocessor (FTMP) performed during this study show that small design changes can significantly affect spares quantities and airplane delays (appendix IX). Therefore, two important model attributes must be an ability to accurately: (1) predict the spares to be provisioned, and (2) represent the incidence of delays.

The quantity of spares provided is a function not only of the equipment characteristics of failure rate, repair time, and cost, but also of airline characteristics of operating hours, penalties of stockouts, route structure, shipping costs, and maintenance policy. Since one of the consequences of a stockout may be an airplane delay or cancellation, spares costs and delay costs are not independent. In turn, delays are a function of a number of probabilistic events, including:

- Airplane scheduled ground time
- Reliability of equipment
- Visibility of failures
- Deferrability of failures
- Availability of mechanics with the right skills
- Availability of spares and test equipment
- Ability to fix the problem at the first attempt

The lack of independence between spares costs and delay costs, and their stochastic nature make a closed-form analytical cost optimization virtually impossible without

decoupling and assumptions for which there is no validity test. Appendix IV deals further with this point.

As an alternative to a closed-form optimization, the Monte Carlo simulation represents a relatively straightforward, feasible method of producing an effective model. Complex stochastic airline processes, with and without dependencies, can be readily represented and, with a comprehensive, validated model, simplifying assumptions can be made for improving its efficiency and can be checked if computer running time becomes a problem.

As noted in Section 4.2, several available simulations were reviewed for possible incorporation into the CBDOM, but none was found suitable for FTFCS optimization. The existing simulations did not treat equipment repair in adequate detail and were not capable of being used in an optimizing mode without considerable modification. Therefore, a new simulation, specified in Section 5.2, is proposed with the ability to consider both fixed resources (for model validation against airline actuals) and optimizable resources.

Four simulation languages were reviewed for suitability during Phase I: Formula Translation (FORTRAN), GASP, General Purpose Simulation System (GPSS), and SIMSCRIPT. SIMSCRIPT was selected because of its economic programming, flexible output, easily checked structured code, and compatibility with existing FORTRAN programs proposed for use in other parts of the model.

The algorithms for the proposed simulation, provided in Section 5.2, consist of an English language description of the airline operations. This language translates directly into SIMSCRIPT code, as illustrated by the following examples:

English Language	SIMSCRIPT
Each LRU enters a prioritized queue on arrival at the repair facility. Components demanding immediate repair are placed on a shortage list and given top priority.	FOR EACH JOB IN Q1 WITH PRTY = 3, CALL INTERRUPT GIVING JOB
Overtime labor is used to alleviate repair backlog whenever the backlog is 15 or more LRUs.	IF N.Q1 GE 15 SCHEDULE AN END.SHIFT IN 3 HOURS JUMP AHEAD

The simulation clock is to be a variable-time advance based on the spacing of discrete events such as flights, failures, or repairs that are simulated. For instance, the SIMSCRIPT statement "SCHEDULE A FAILURE GIVING TYPE AND UNIT IN EXPONENTIAL. F(MTBF(MEMORY),3) HOURS" selects a random sample of time to failure from an exponential distribution with a mean = MTBF for component of type MEMORY using a random number generator with a seed of 3. Using this technique, it is possible to build a model that simulates the stochastic processes associated with operating the FTFCS with considerable fidelity and economy. Two programs were developed to gain experience in the use of SIMSCRIPT and to assist in a preliminary FTFCS sensitivity study. They are described in Appendixes VII and VIII.

Appendix VIII illustrates the relative economy of developing a simulation, compared to the complexity of the closed-form solution that seems to be typical of fault-tolerant systems. Appendix VIII provides an example of the use of simulation for reliability

analysis that had not been contemplated at the beginning of this program and is now considered to be a viable analysis method.

5.1.3 Economic Analysis

Information generated by the O&M simulation (such as labor hours, delay hours, and spares required) will be translated into dollars. They will then be combined with input cost data (such as the equipment and installation investment costs or weight or drag savings and penalties) so that cumulative cash flows and profit can be generated for the configuration of system and operating conditions being evaluated. The costs and benefits to be included in the analysis are listed below.

- Benefits
  - Increased range
  - Increased payload
  - Better ride quality
- Investments
  - Installed equipment
  - Rotatable spares
  - Expendable spares
  - Ground equipment
  - Special tools
  - Test equipment
  - Training equipment
  - Other
- Operating costs
  - Maintenance labor
  - Maintenance material
  - Maintenance burden
  - Spares holding
  - Maintenance training
  - Fuel/weight/drag
  - Delays/cancellations
  - Airplane insurance
  - Debt financing
  - Other
- Retirement
  - Salvage costs
  - Salvage credits
- Taxation
  - Investment tax credit
  - Depreciation credit
  - Income tax payments

The profitability of a design concept is determined by summing the costs and benefits for a given configuration or, in the case of a design comparison, by using differential costs and benefits between alternatives. The Airline Cost Estimating System (ACES) computer program described in Appendix II provides the capability to perform most of the economic analysis required. Modifications to ACES to make it compatible with CBDOM requirements are provided in Section 5.3, along with details of algorithms already programmed.

5.1.4 Optimization

The variables to be optimized for maximum airline profit consist of two groups. The first group is those variables that produce maximum profit for a given FTFCS configuration, including:

- Number of mechanics with specified skill levels
- Number of spares
- Quantity and effectiveness of automatic test equipment
- Number of test benches
- Locations of the above items

The second group of variables to be optimized are characteristics of the FTFCS design and could consist of:

- The number of replicated components, stages, LRUs, and software packages
- Packaging alternatives (ranging from everything packaged in a single LRU to individual packaging at a physically indivisible level or down to a noneconomical level)
- Time between inspection and scheduled replacements

In addition to the optimizable FTFCS characteristics, the user always has the option of changing input to the model for such things as:

- Remove, replace, and repair time
- Component, stage, and LRU investment cost
- Weight, drag, and fuel price

With user control of these variables, the sensitivity to errors in inputs estimated can be established.

Several methods of optimization were considered, including:

- Heuristic search--Repeated guesses at input values are made until a good solution is found.
- Complete enumeration--This is considered impractical until sufficient work has been performed to reduce the number and range of variables involved with FTFCS.
- Nonlinear simplex search--This is an iterative way of efficiently seeking optimum values of the input variables.

The nonlinear simplex technique, developed by Nelder and Mead[13], appears to be the only satisfactory approach (sec. 5.4). It provides an effective way to reduce the number of input variable design points to be simulated and permits efficient optimization. As a result of using this technique, the analysis is controlled by the optimization routine shown in Figure 4.

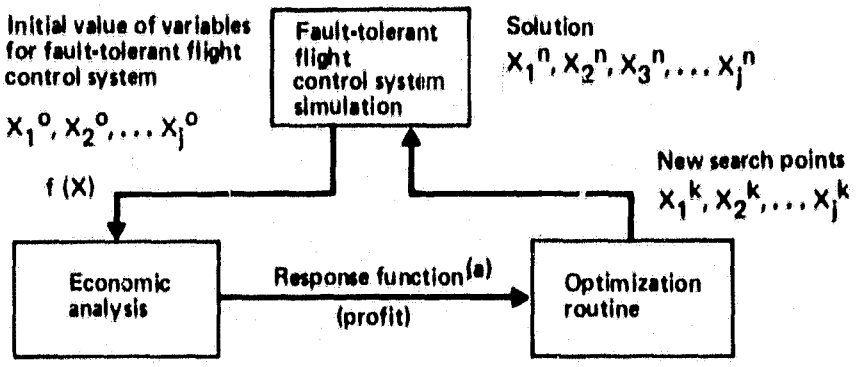

[a] For continuous variables, a response hypersurface in j + 1 dimensions is generated, and for discrete variables, a j + 1 dimensional lattice is produced.

Figure 4. The Analysis and Optimization Method

5.1.5 Model Simplification

Until some realistic FTFCS configurations have been analyzed and different maintenance strategies examined, it is difficult to determine if all the features that could be built into the CBDOM are justified. However, it is proposed that, in the interests of economy, some simplifications be made initially. The model incorporates the following simplifications that might be removed subsequently in Phase II or III, if considered desirable:

- The proposed CBDOM provides for simulation of a fixed fleet size.

  Rationale--Fleet buildup generally takes less than a third of the fleet life. Developing a scheduling model for a fleet that builds up at a realistic rate would probably entail substantial work and could be accomplished later if it is considered necessary to prove that buildup is a second-order effect. Buildup is considered a second-order effect because maintenance labor costs per flight hour, which generally peak in the second or third year of operation, occur when the fleet size is relatively small (table 1). Therefore, a solution is to assume that mature and stable costs apply to all years.

  The O&M simulation will be structured so that it can be expanded to allow for a varying fleet-size calculation. The provision would necessitate changing several inputs yearly, including:

  - Fleet size
  - Route structure
  - Cities served
  - Schedules
  - Station characteristics

Table 1. Multiplier Factors to Convert Stable Maintenance Costs to Costs per Hour During Each Year (ref. k)

	Year since start of operation						
	1	2	3	4	5	6	7 and on
Airframe							
Labor	0.70	1.06	1.18	1.14	1.00	1.00	1.00
Material	0.98	1.21	1.15	1.06	1.00	1.00	1.00
Powerplant							
Labor	1.46	1.68	1.50	1.32	1.14	1.00	1.00
Material	0.98	2.06	1.96	1.83	1.60	1.31	1.00

- Accidents will not be simulated.

  Rationale--Although flight diversions and accidents are high-cost events, they are infrequent on today's airplanes and should be less so with FTFCS airplanes. For instance, if the FTFCS is designed to achieve a failure probability of less than 10^{-9} for a 10-hr flight, then for an accident with cost consequences including litigation of $1 billion, the effect is as little as $0.10/flight hour and can be neglected.

- Realistic simulation of events following a cancellation or diversion is difficult. However, their economic effect will be approximated using a cost penalty, calculated as shown under CN and DT in Section 5.3.3, based on the loss of the discrepant flight and all subsequent flights to the end of the day. The simulation schedule of flights then will be completed as though no interruption had occured.

  Rationale--In practice, the decision to use a substitute airplane or cancel a flight involves complex decision logic based on the experience and intuition of teams of airline schedulers. An unknown, but certainly large, amount of work would be required to establish and model the rescheduling logic to account for cancellations or diversions and would entail an ability to dynamically reschedule airplanes in the CBDOM.

- Software and firmware will be assumed to have reliability and maintainability characteristics similar to hardware.

  Rationale--The analyst will be able to treat software packages and modules as though they were hardware by providing failure rates and "repair times," along with a statement of dependencies that can include hardware or other software, as provided for in Section 5.2.4. If future failure models for software evolve that are significantly different from the failure generator described in Section 5.2.5, the CBDOM could be changed to accommodate this evolution.

- Spares pooling and borrowing will not be included in the model.

Rationale--The development of a spares pooling and borrowing model is a major task in its own right. For Pan American Airways, only 8 percent of flight control system spares used by line stations are pooled items. The extent of borrowing has not been established, but is known to be no-cost reciprocal agreement among several airlines. However, the maximum benefits obtainable from pooling may be established by using the CBDOM for a fleet and route structure equal to the pool-size fleet. This would assume pooling of 100 percent of the spares stocked.

5.2 OPERATIONS AND MAINTENANCE SIMULATION

No O&M model was found that was suitable for use in the FTFCS, and the model specified in this section must, therefore, be created. The Monte Carlo simulation of O&M generates the cost statistics in terms of personnel, materials, spares, airplane downtime, delay time, and ground-support facilities used to operate and maintain a given configuration of FTFCS. The simulated functions will include:

- Operations
  - Airplane selection for dispatch
  - Preparation for flight
  - Flight and failure generation
- Maintenance
  - Maintenance after flight
  - Equipment repair and replacement
  - Postmaintenance validation

The FTFCS is allowed to impact the airline's scheduled service by superimposing FTFCS failures on a simulated airplane fleet.

The user can investigate alternative operations, maintenance, and repair scenarios by specifying model inputs that characterize the airline configuration of interest. Inputs specified by the user for airline operation and maintenance include:

- Route structure
- Existing station characteristics
- Potential location of FTFCS resources
- Scheduled maintenance policies
- Unscheduled maintenance and repair characteristics
- Probability of isolating failures by testing
- Removal rates for repairable and expendable units

The configuration of an airline's operating and maintenance system is to be specified by selecting appropriate values and options for the available inputs. For example, the location of maintenance facilities within a selected city network and the staffing policy for each facility impact the eventual airline performance resulting from a simulation run. Similarly, the impact of delays within the system and the ability to mitigate their consequences are heavily dependent upon the flexibility of the particular schedule chosen and the choice of logic options for handling airplane substitutions. To ensure the reasonableness or compatibility of user-supplied inputs to the model, data check and verification procedures will be incorporated.

Since it would be unrealistic to consider the downtime and delays attributable only to the FTFCS, the whole airplane will be divided into three areas of interest:

- The FTFCS
- Other avionic systems
- The remainder of the airplane

Dividing the airplane in this way allows the FTFCS and other avionics to contend for the same resources and permits the masking of delays due to the FTFCS with other delays of the airplane and vice versa.

Timely repair and repositioning of serviceable avionics equipment impact the overall effectiveness of the airline to meet schedules and, ultimately, total system operating cost. Repair of avionics equipment, including FTFCS components, is to be simulated in detail in the O&M model. The intent is to duplicate the procedural flow of repair tasks conducted by a commercial airline. Repairable components and LRUs are sent to the most appropriate repair shop from field locations where they are judged faulty.

The O&M model provides output of the resources used in conjunction with each given configuration of airborne equipment. Typical output data produced by the model will consist of:

- Maintenance labor hours by equipment and skill level
- Expendable materials used
- Number of spares required for different LRUs and repairable components by station
- Frequency, length, and cause of airplane delays
- Unscheduled airplane downtime due to cancellations
- Equipment utilization hours
- Equipment transportation between stations and supplier repair facilities

5.2.1 Airplane Scheduling

Before running the O&M simulation model, the user selects an "airline itinerary": a set of cities for air service, the route structure for connecting each city, and a flight schedule for each airplane in the fleet. The user has two options for accomplishing the input of an airline itinerary in the O&M model. An airline itinerary model may be selected from an itinerary in use by an existing airline or the user can manually enter data for a network of his own choice. The latter option can be a tedious task for a large, interconnected network. Nevertheless, the option is available for users having a specific network in mind and the detail necessary to describe it. To facilitate use of the O&M model, a set of prespecified airline itineraries will be provided. These itineraries are internal to the model and selected to represent a spectrum of domestic and U.S. flag carriers, both passenger and freight, produced by extraction and edit of data from the Official Airline Guide (OAG)[15].

The OAG is used to develop airline itineraries and schedules for the simulation model. The primary data file, PATH BASE, is maintained by Reuben A. Donnelley Corporation, a Dunn and Bradstreet company. The OAG defines monthly airline schedules, which are easily accessed from magnetic tape, providing a current and complete source of flight information for all airlines and airplane types.

The process of assembling airline routes and schedules from the information contained in the OAG tapes is illustrated in Figure 5. The first step is to extract all flight records for the airline and airplane type specified in the input. This is done by the Edit Program, which also checks data integrity and, if some schedule inconsistency is discovered, provides diagnostic printouts to facilitate manual data editing. Then, the Itinerary Reconstruction Program continues the process by assembling individual flight legs into airplane itineraries, using the appropriate flight leg designations in the OAG code. The next step is to connect itineraries into partial tours, using the Routing Program, which creates sequences of itineraries characterized by relatively short turnaround times between successive itineraries. A sample of the output is shown in Figure 6.

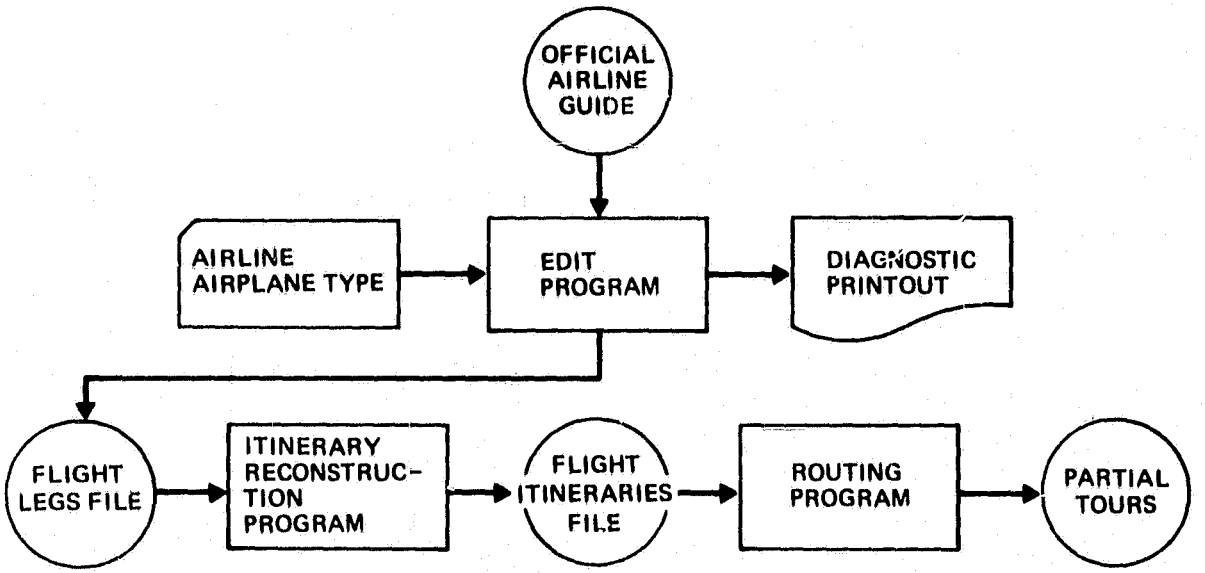

Figure 5. Production of Simulation Itineraries and Schedules

To complete the airplane routing process, an additional route cycle generation program must be developed. This program will assemble partial tours into complete tours in which each airplane's path can be traced from the beginning to the end of its route cycle. The algorithm to be used will be similar to the Airline Crew Scheduling Program subroutine described in Reference 16. The basic approach is to prepare lists of partial tour arrivals and departures, organized according to arrival and departure times. This organization ensures that arrivals can be linked to successive departures in a way that satisfies the input constraints and the objective of the minimum possible total airplanes.

ORIGINAL PAGE IS
OF POOR QUALITY

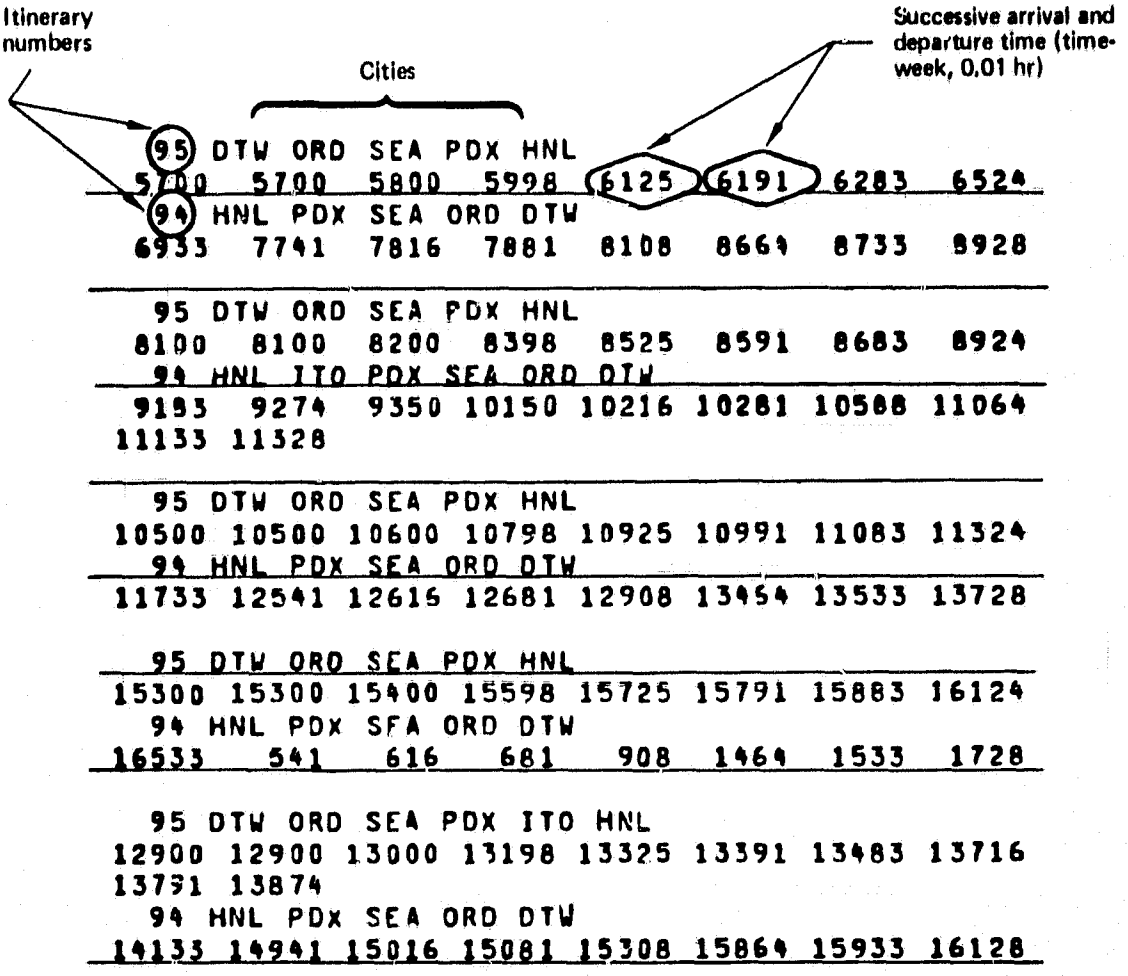

Figure 6. Sample of Partial Tours in Output From Route Generator

The computational procedure for the Route Cycle Generator is outlined in Figure 7. The first step is to prepare for each city a list of partial tours that originate and terminate at that city. These lists are sorted in ascending order of time (departure times for originating tours and arrival-plus-turnaround times for terminating tours).

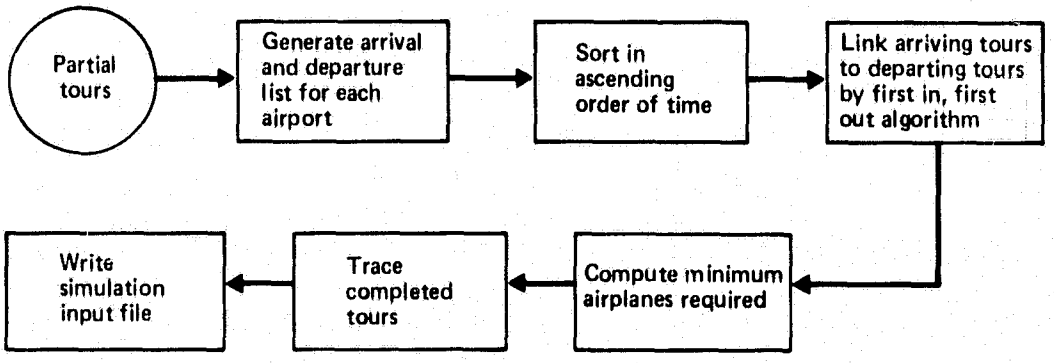

Figure 7. Computational Procedure for Route Cycle Generation

The next step is to link arriving tours to subsequent departing tours at each city by means of the algorithm shown in Figure 8. This algorithm is based upon the first-in-first-out (FIFO) rule, and the results are consistent with the requirement for minimum fleet size.

The method used to relate the number of airplanes required to departure schedules is based on the assumption that the schedules are cyclic either on a daily or weekly basis. This method is described in the rest of this section.

Let the number of airplanes stationed at airport (i) at time (t) be represented by $N_i(t)$, and let M(t) represent the number of airplanes en route between airports. The total number of airplanes in the fleet is $\sum_i N_i(t) + M(t)$. It may be assumed that at t = 0, which is the beginning of the schedule cycle, all airplanes are on the ground and M(0) = 0. Thus, the problem of determining fleet size is equivalent to evaluating the sum $\sum_i N_i(0)$.

The function $N_i(t)$ will be referred to as the "airport activity function." The relationship between this function and the departure and arrival times can be described by the following equation:

$$N_i(t_2) - N_i(t_1) = A_i(t_1,t_2) - D_i(t_1,t_2), \quad t_2 > t_1$$

where $A_i(t_1,t_2)$ and $D_i(t_1,t_2)$ are the numbers of arrivals and departures, respectively, in the time span from t_1 to t_2.

The flowchart of an algorithm to determine numerically the value of $N_i(0)$ for a given set of arrival and departure times is shown in Figure 9. First, a list of flight numbers $F_{i,j}$ is prepared at each airport in which the minus sign indicates departures, while the lack of a minus sign indicates arrivals. Let $T_{i,j}$ represent the departure time for outgoing flights and arrival-plus-turnaround time for incoming flights. The set $(F_{i,j})$ is ordered in increasing time sequence so that $T_{i,j+1} > T_{i,j}$. Let $N_{i,j}$ represent the number of airplanes just prior to the j-th flight. Then,

$$N_{i,j} = N_{i,j-1} + 1, \text{ if } F_{i,j} > 0$$

$$N_{i,j} = N_{i,j-1} - 1, \text{ if } F_{i,j} < 0$$

Starting with an arbitrary initial value $K_{i,1}$, the recursive use of these equations will yield a set of values $(K_{i,j})$. Let K^* represent the minimum value in the set $(K_{i,j})$. By setting $N_{i,j} = K_{i,j} - K_i^*$, the resulting set $(N_{i,j})$ will satisfy the condition that all of its members are non-negative; that is, $N_{i,j} \geq 0$. Thus, the initial value of the airport activity function is given by:

$$N_i(0) = K_{i,1} - K_i^*$$

By the summation of $N_i(0)$ over all cities in the network, the minimum number of airplanes required to satisfy the schedule is obtained.

The last step in the computational procedure outlined in Figure 7 is to assemble the completed tours. This is done by tracing partial tour linkages from city to city until each tour cycle is identified. Output from the route cycle generation enables the FTFCS configurations to be evaluated and optimized by the CBDOM.

ORIGINAL PAGE IS
OF POOR QUALITY

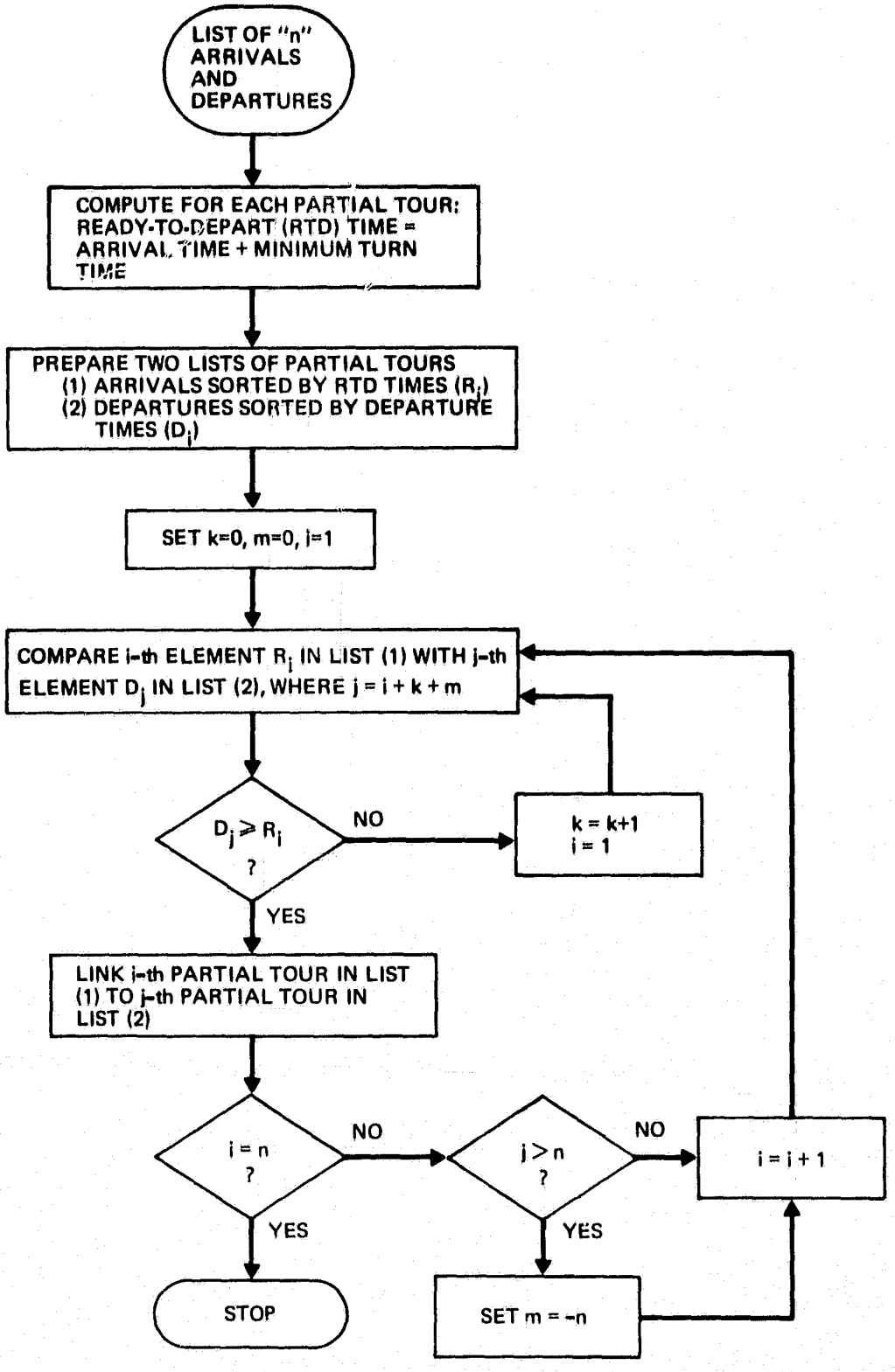

Figure 8. Algorithm for Linking Partial Tours

ORIGINAL PAGE IS
OF POOR QUALITY

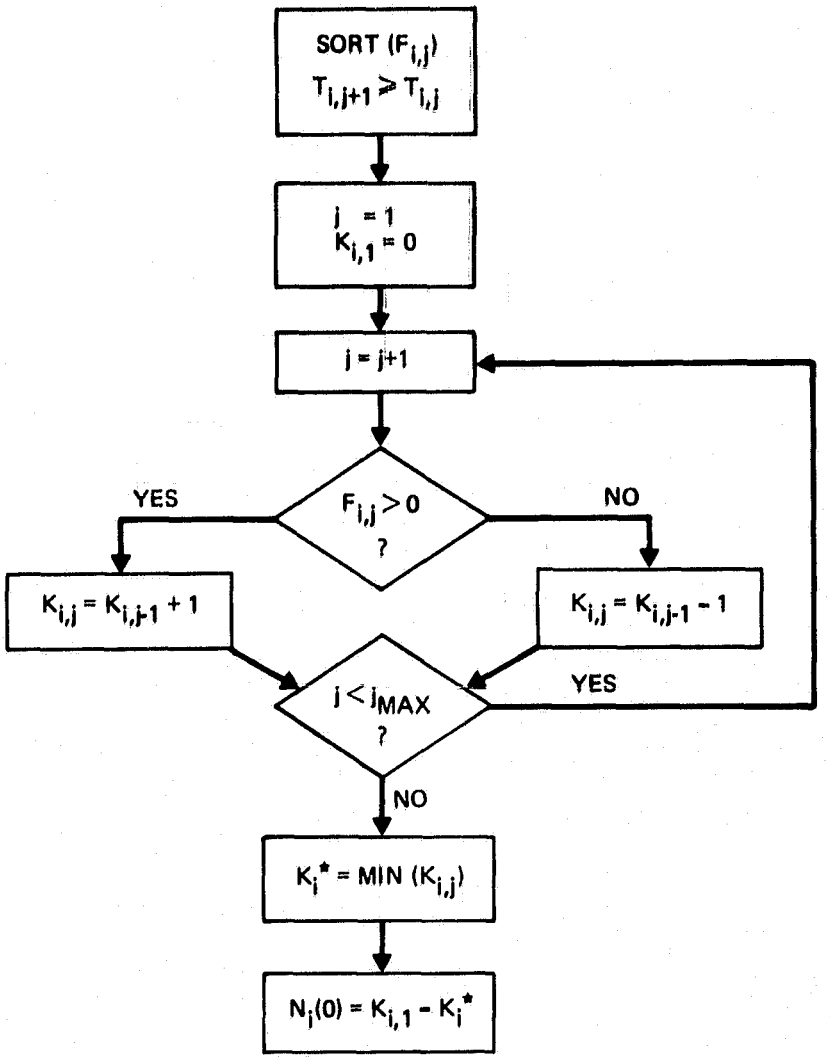

Figure 9. Algorithm for Determining Fleet Size N_i (0)

5.2.2 Substitution and Cancellations

Interchanging the position of the airplanes within the airline itinerary is allowed in the O&M model only at the day's end or before daily flight operations begin. To be candidates for interchange, both airplanes must be located at the same city; i.e., they both remain overnight at the same location.

A primary reason for allowing interchange is to expedite maintenance actions on one or more airplanes. For example, assume that some maintenance action is required on Airplane 4 in Table 2. Also assume that the maintenance must be undertaken at Chicago (ORD), but is deferrable for 1 day. Airplane 4 could interchange itinerary positions with Airplane 8 to facilitate the required repair. The model logic determines interchange possibilities and executes them if necessary and feasible.

ORIGINAL PAGE IS
OF POOR QUALITY

Table 2. Sample Airplane Itinerary for Day 1

Airplane number	Itinerary								
1	LGA	ORD	TOL	ORD	LGA	ORD	TOL		
2	TOL	ORD	LGA	ORD	TOL	ORD	LGA		
3	LGA	ORD	MBS	ORD	LGA	ORD	DTT		
4	DTT	ORD	LGA	ORD	DTT	ORD	LGA		
5	LGA	ORD	CID	ORD	CID	ORD	SFO	ORD	LGA
6	LGA	ORD	DTT	ORD	MBS	ORD	LGA	ORD	LGA
7	LGA	ORD	MBS	ORD	LGA	ORD	DTT		
8	DTT	ORD	LGA	ORD	CID	ORD	SFO	ORD	
9	Two nights at ORD								
10	ORD	CLE	ORD	DEN	ORD	DEN	ORD	CLE	
11	CLE	DEN	SLC	DEN	CLE	ORD	DEN	ORD	
12	ORD	CLE	ORD	DEN	ORD	DEN	ORD	CLE	
13	CLE	ORD	LGA	DEN	ORD				
14	ORD	CLE	ORD	DEN	ORD	DEN	ORD	CLE	
15	CLE	ORD	LGA	DEN		ORD			
16	ORD	CLE	ORD	DEN	ORD	DEN	ORD	CLE	
17	CLE	ORD	LGA	DEN	SFO	DEN	ORD		
18	Two nights at ORD								
19	ORD	TOL	ORD	DEN	LGA				
20	LGA	ORD	SFO	ORD	DEN	ORD			
21	ORD	TOL	ORD	DEN	LGA				
22	LGA	ORD	SFO	ORD	DEN	ORD			
23	ORD	TOL	ORD	DEN	LGA				
24	LGA	ORD	DEN	ORD	DEN				
25	DEN	ORD	DEN	ORD	LGA				
26	LGA	ORD	LGA	ORD	DEN				
27	DEN	ORD	DEN	ORD	LGA	ORD			
28	ORD	LAS	ORD	CID	ORD	LAS			
29	LAS	ORD	LGA	ORD	LGA	ORD			
30	ORD	LAS	ORD	CID					
31	CID	ORD	LGA	ORD	DEN	SLC			
32	SLC	DEN	ORD	SFO	ORD	LGA	ORD		

It has not been possible to develop a method of simulating the events following a flight cancellation. In the real world, schedules for a number of airplanes may be changed to close the gap left by a failure that results in cancelled flights. Also in the real world, one or more nonrevenue repositioning flights may be required following a cancellation. Further work is required in the proposed Phase II of this program to establish the cost consequences of cancellations and a recovery method, so that the correct cost penalty can be applied to a simulation model cancellation. In the interim, a cost penalty will be based upon loss of all flights from the cancelled flight to the end of the day. The cost penalty will be calculated using the expression for CN described in Section 5.3. The airplane then will continue as though no cancellation had occurred.

5.2.3 Line Maintenance and Repair

As each airplane cycles the airline itinerary, opportunities for maintenance are encountered. Scheduled maintenance actions are built into the itinerary. For example, note the entry for Airplane 9 in Table 2. It is scheduled to spend 2 days and nights at ORD. During this time, maintenance actions are undertaken to make all airplane systems current and operable.

Unscheduled maintenance is performed as necessary, depending on the resources and time available. The user is required to select, as input, the types of maintenance

conducted at each airport in the network, the available manpower by skill level, and the location and staffing of the repair facility.

Line Maintenance—Three levels of station maintenance resource are to be selected by the CBDOM user and allocated to each city on the route according to the following definitions:

- Type 1--Has no maintenance resources. Maintenance at Type 1 stations is accomplished by requesting assistance from the nearest Type 2 or 3 station. Replacement parts, personnel, and equipment will be flown in from the nearest station with available resources.

- Type 2--Has a single personnel resource pool with mechanics capable of performing all unscheduled line maintenance and scheduled work for T-checks (transit) and A-checks (see appendix I for definitions).

- Type 3—Has one personnel resource pool for gate positions and one for the hangar, each operating independently. Gate personnel perform unscheduled work and all checks through A. Hangar personnel perform B- and C-checks.

The logic for operation of a typical Type 2 or 3 station is shown in Figure 10.

The user may specify the skill levels to be provided at each Type 2 or 3 station by combinations of the following options:

- Skill 1 mechanics are capable of performing any maintenance on the airplane associated with replacement or adjustment of avionic equipment, including FTFCS.

- Skill 2 mechanics are capable of performing any maintenance on the airplane associated with replacement or adjustment of mechanical equipment.

- Skill 3 mechanics are required for testing, inspection, and repair of unserviceable avionic equipment except specified FTFCS equipment.

- Skill 4 technician/programmers can accomplish Skill 1 and 3 work. In addition, they are required for changes to software, firmware, and checkout of changed or modified FTFCS equipment. Skill 4 personnel will receive recurrent training every 6 months on FTFCS maintenance. (However, it remains to be seen if the FAA will permit airlines to perform such changes.)

Line maintenance actions are generated for each FTFCS LRU as shown in Section 5.2.5. If a nondeferrable fault is detected at a city with insufficient resources to rectify the fault, appropriate resources are flown to that city. In actual practice, airlines accomplish this using other scheduled carriers, chartering a flight, or relying upon their own flight schedule for delivering the necessary resources. Charter and competitive airlines are not included in the O&M model. Consequently, to simulate expedient repair of such a disabled airplane, a time distribution sample is used to determine the length of time it takes to position the required resources where needed. All resources used in this way are accounted for and their availability is tracked. For example, if two mechanics are repositioned from Chicago to some remote location, the model decrements Chicago's number of available mechanics by two until the work is complete and they return.

ORIGINAL PAGE IS
OF POOR QUALITY

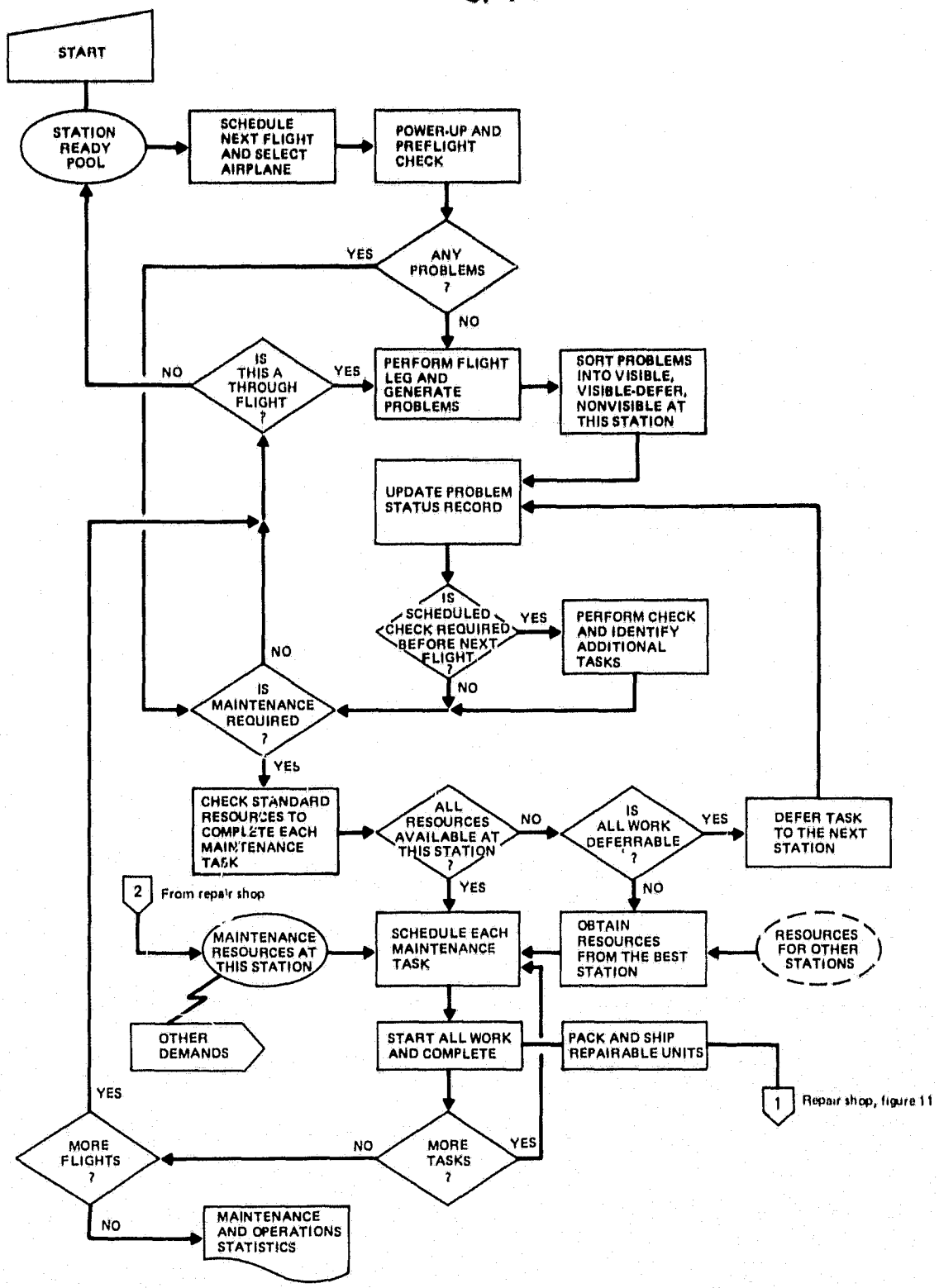

Figure 10. Typical Line Station Logic

Scheduled maintenance of an airplane is conducted in the O&M model during T-, A-, B-, and C-checks. The maintenance activities covered by each of these checks are described in Appendix I. T-checks are conducted daily and are short checks made on an airplane whenever it stops at an airport that has maintenance manpower. A-, B-, and C-checks are conducted as a function of elapsed flight hours for each airplane. The model user will be able to specify the form of these functions as input to the model. For example, the user can specify that A-checks can occur sometime between 50 to 100 flight hours after any previous letter check. The model then schedules each airplane's A-check within this time frame.

The time required to complete each letter check is a random variable and is determined in the model by a draw (a random sample drawn from a characteristic probability distribution). The type of draw will depend on the resources available for conducting the letter check. For example, if four qualified mechanics are available to conduct an A-check on a particular airplane, the duration of the task will be longer than a situation in which six mechanics are available to conduct the A-check. The model will track resource availability and allocate manpower to minimize delay.

B-checks are made less frequently than A-checks, but are more extensive, taking longer to complete. However, A and B-checks can be completed during an overnight layover if sufficient manpower is available. C-checks take longer than overnight to complete. The airline itinerary allows for this by including an extended layover at appropriate maintenance facilities. As each airplane in the fleet cycles through the airline itinerary, it has a maintenance opportunity when this layover is encountered.

Unscheduled maintenance requirements occur in the O&M model when previously generated faults to the airplane are detected. The procedure for generating, detecting, and recording faults to the airplane is discussed in Sections 5.2.4 and 5.2.5. In general, repair to some detected faults is deferrable until a maintenance opportunity, e.g., a scheduled letter check or overnight at a qualified maintenance facility. Deferrable faults are corrected at the first opportunity to complete the required maintenance action. Workload requirements for correcting these faults are in addition to any scheduled maintenance actions. The faults generated by the model are repaired either in series with, or parallel to, ongoing maintenance activities. For example, if qualified mechanics are available in addition to those making an A-check on the airplane, the model-generated faults are repaired during the time an A-check is under way. If sufficient mechanics are not available, then the A-check schedule time is exceeded.

Nondeferrable faults must be repaired before an airplane can resume service. Nondeferrable faults have repair priority over other repairs if schedule delays are imminent. If nondeferrable faults are detected at a location not staffed with qualified mechanics, mechanics are transferred to repair the defect. Mechanics sent to put an airplane back in service are dispatched on a priority basis with respect to the current workload.

Repair Shop Maintenance--The repair shop model simulates the test and repair of the avionic equipment used aboard an airline's fleet.

Two classifications of repairable avionic equipment are modeled. One classification is used to represent the FTFCS components that have failed in the O&M model. These FTFCS components are individually tracked from the time they are removed from the airplane to the time they arrive at the repair shop.

A second classification, termed "all other avionics," represents additional components that are repaired in the modeled shop. This collective category contributes most of the workload in the repair shop. Arrivals of all other avionic components at the repair shop are generated in the model by a draw from a user-selected distribution. Draws from additional distributions establish individual repair characteristics of avionic components arriving for repair.

The repair model is governed by repair shop input data and will be based upon line station simulation, actual airline operational data, and estimates for FTFCS equipment. These include items such as frequency distributions for arrivals of repairable components at the repair shop, repair time distributions, working hours and shifts, and overtime rules. Figure 11 illustrates the generalized logic flow of the model's avionic equipment repair tasks.

Repair priority is another characteristic influencing any component's flow through the repair shop. Three repair priorities are used in the model:

- P3—highest priority (used for airplanes on the ground)
- P2—intermediate priority (used for interrupted tasks)
- P1—lowest priority

FTFCS components receive a repair priority based on line station demand.

When each non-FTFCS component arrives, it is assigned a repair priority by a draw. The value of a component's repair priority is used in the model to establish its position within any queue. P2 components queue ahead of P1 components and behind P3 components. Repair priority P3 is used for components requiring immediate repair. A P3 value allows the component to interrupt an ongoing test or repair of a component with lesser priority. Any component interrupted by a P3 component is assigned a P2 value for the remainder of its time in the repair shop.

In addition to repair priority, each arrival is assigned a prerepair test time, a repair time, and a postrepair test time by draws from separate distributions. Two additional draws are used to describe the individual components. The first draw determines if the component's fault is confirmed upon pretest. The second draw establishes whether the fault was repaired after the component had passed through the repair cycle. Components with faults that are unconfirmed at pretest are treated as being repaired and fully functional. Components failing the postrepair test are treated like new arrivals and are required to undergo an additional cycle through the repair shop.

Two types of test equipment are used by the repair shop: automatic test equipment (ATE) and manual test equipment. Input to the model specifies which type of test equipment is required by each FTFCS component. Some components, notably those represented by the category "all other avionics," can use either type of test equipment. In these cases, the applicable test equipment is decided in the model by means of a draw. The outcome of the draw determines if an individual component requires ATE. This information then accompanies the component as it passes through the repair shop.

Two contrasting repair flows are distinguished in the model, depending on the type of test procedure (ATE or manual). Equipment is not repaired while on ATE. Rather, faulty equipment is transferred to a repair bench, which contains a modest amount of manual test equipment, and most of the necessary parts for isolation and repair of faults uncovered by the ATE. This procedure frees the ATE bench and is adopted

ORIGINAL PAGE IS
OF POOR QUALITY

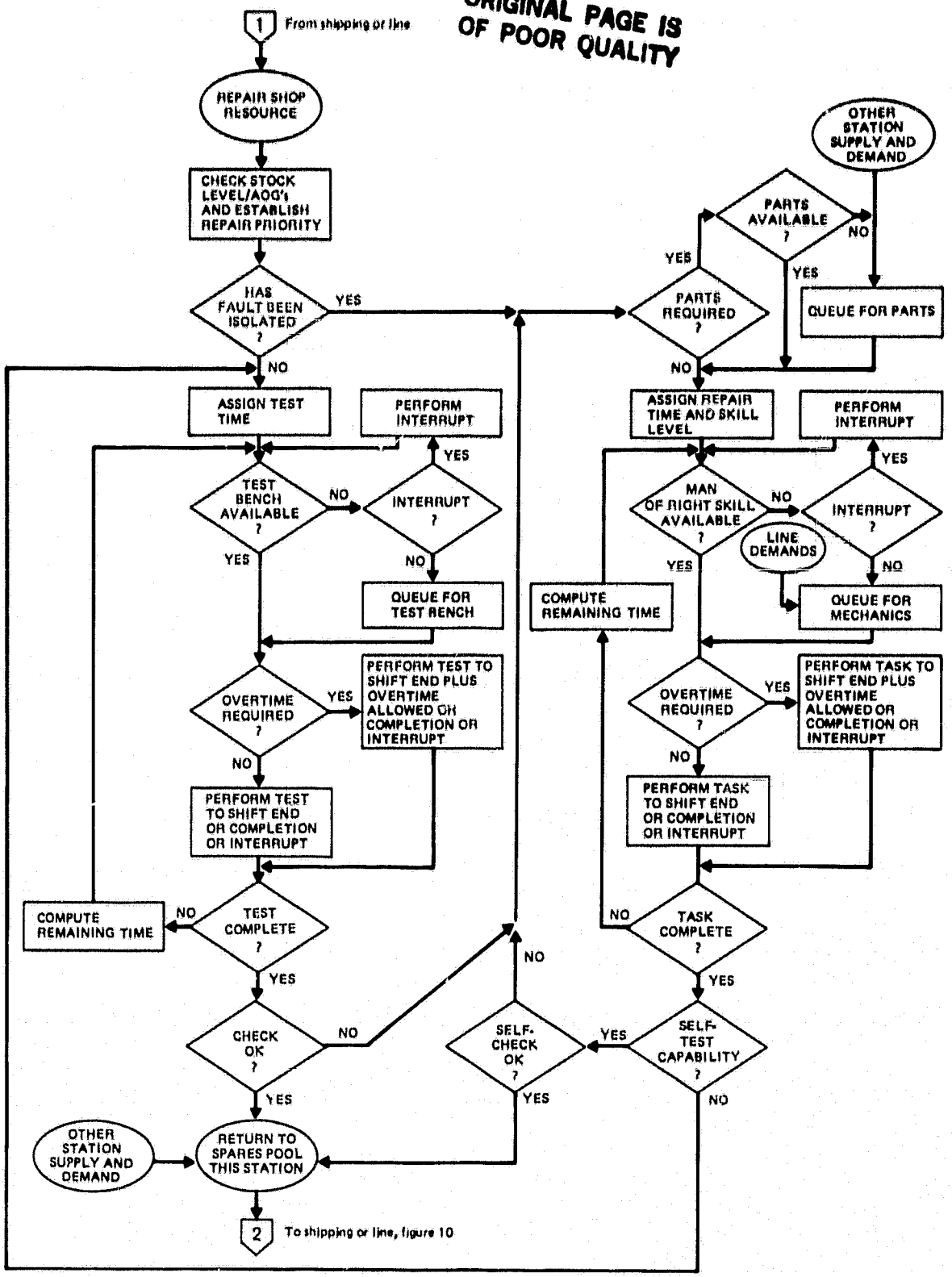

Figure 11. Repair Shop Logic

because of the relatively high investment cost of ATE. An exception to this procedure occurs when a component's repair time is small. In this case, the repair is conducted at the ATE bench, followed immediately by an ATE postrepair test on the component.

Components not using ATE are tested and repaired at dedicated test benches that contain the test equipment necessary for manual test and repair of avionic components.

Overtime labor is used to alleviate repair backlog, component stockout, or P3 repairs.

The repair task is completed when the component is dispatched to a specified location or placed in inventory.

5.2.4 FTFCS Equipment Definition and Failure Status Recording

This section describes the method to provide formal computer-compatible descriptors of the candidate FTFCS. The descriptors can be used to input and to track failure status of equipment in the O&M simulation. In addition, the descriptors provide storage for some data used only in the economic analysis.

For purposes of definition, the FTFCS will be divided into physical and functional parts and groups of parts. The fundamental FTFCS building block is called a "component." The collection of all FTFCS components will be called the "system." Within the system, similar components will be members of sets to be referred to as "stages." Finally, the current collective condition of all components within the system shall be known as the system "state." A component (or components) that may be easily replaced by line-station mechanics is called a "line-replaceable unit" (LRU). Definitions of the above terms as they apply to the cost optimization are as follows:

- Component--An FTFCS component is a repairable or replaceable part or a group of parts. Its fundamental characteristic is that the CBDOM user determines it to be one of the basic FTFCS units, from a cost-optimizing point of view. Thus, an FTFCS component is an important, definable part (or indivisible collection of parts) with a known failure rate and failure effect. Examples of possible FTFCS components are: processor, memory, clock, sensor, actuator, bus, display, software, and firmware.

- Stage--Identical interchangeable components are called stages. Identical means that all members of a stage are the same type of component and have the same failure rate.

- System--The system is composed of a series of all of the stages, each stage containing similar components.

- State--The system state consists of a current "snapshot" of the system. This "snapshot" reveals:

    - The arrangement of components into stages
    - The number of failed components per stage
    - The components that have failed
    - Each stage's dispatch-critical complement
    - The LRUs in which the failed components are located
    - The components that are due for regularly scheduled maintenance

- Line-Replaceable Unit (LRU)—A unit that can be readily changed on an aircraft during line maintenance operations.

The physical and functional parts of the FTFCS can be represented using a linked-list data structure. This enables a record to be kept of functional failures and physical LRUs or components that are replaced or repaired by maintenance. Figure 12 illustrates typical physical and functional groups.

During simulation of the FTFCS operation, component failures are generated and the stage failures are recorded. For example, the system shown in Figure 12 might allow dispatch with up to two failures in any stage. A further failure in this stage necessitates maintenance. Maintenance takes place on an LRU, not a stage, unless the stage is packaged as an LRU.

A PASCAL program was produced during this study to gain experience with linked-list data structures. Figure 13 shows a typical record output from the program in which Power Supply 9 of Stage 5 in LRU 2 fails, causing a number of dependent components to fail as well, including Processor 9 of Stage 1 in LRU 2.

The model checks the FTFCS status to determine if the dispatch requirements for the particular station can be met, as shown in Figure 14. As well as recording FTFCS status, additional input data are required to simulate maintenance and perform economic analysis. The data for each component may be interactively built into an input file and include:

- Type
- Quantity
- Weight
- Package type (card, chip, box, etc.)
- Cost
- Dispatch-critical complement
- Turnback and diversion complement
- Failure rate
- Fixed overhaul letter-check code and frequency (e.g., 3B equals every third B-check)
- Percentage of failures detectable (by letter-check)
- Test-time distribution
- Removal time
- Repair-time distribution
- Replacement time

ORIGINAL PAGE IS
OF POOR QUALITY

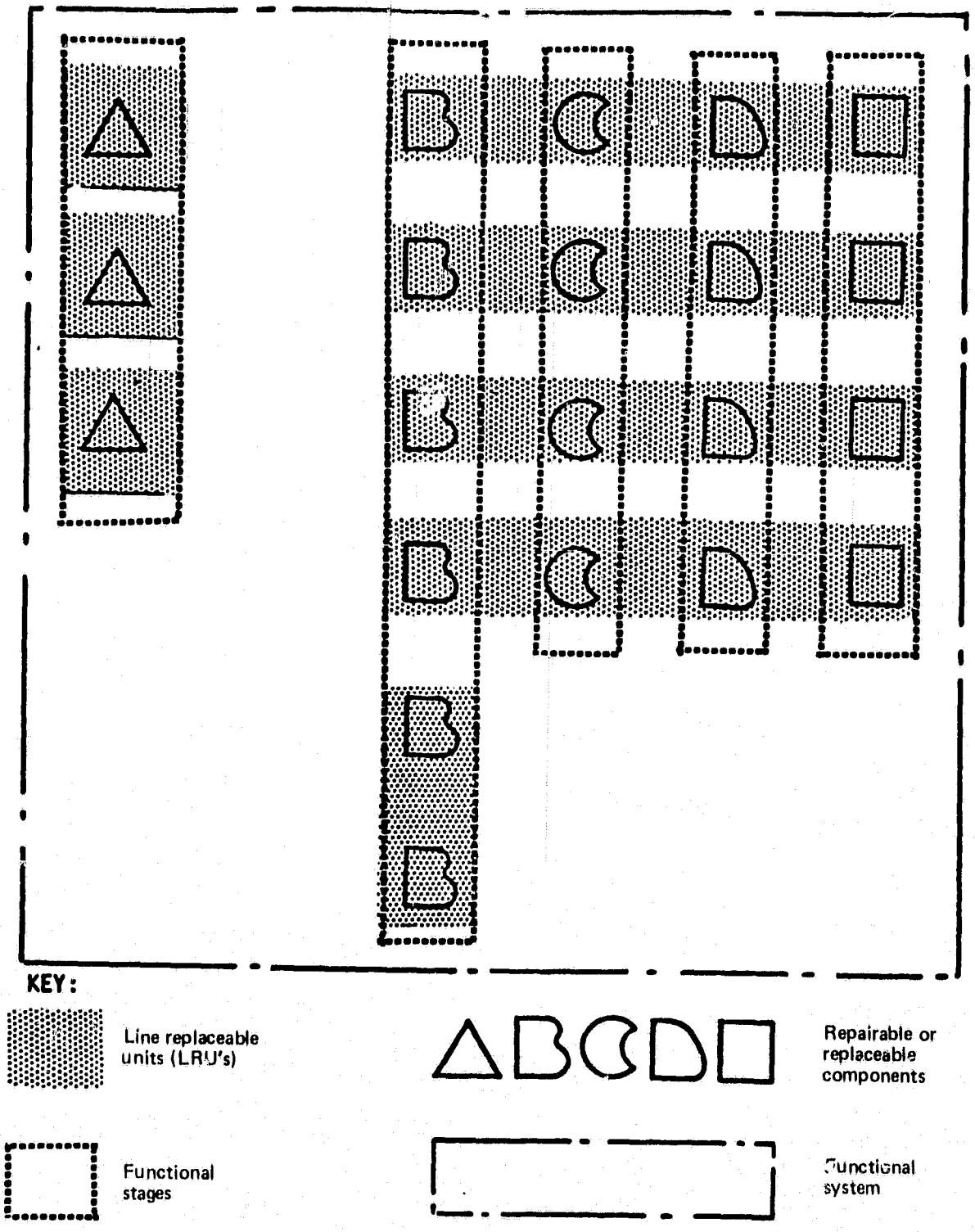

Figure 12. Physical and Functional Component Sets

ORIGINAL PAGE IS
OF POOR QUALITY

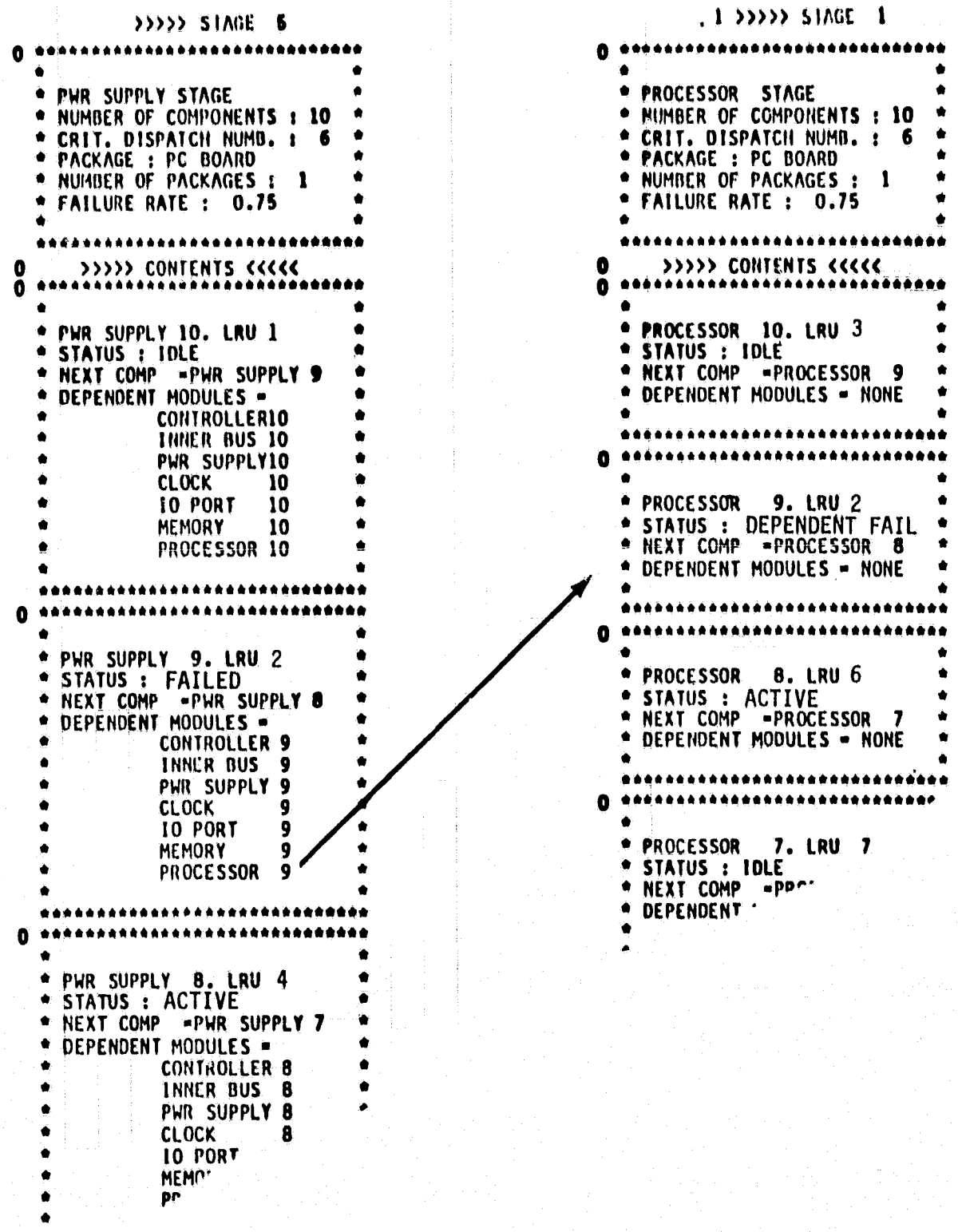

Figure 13. Example of Simulation Record Keeping

ORIGINAL PAGE IS
OF POOR QUALITY

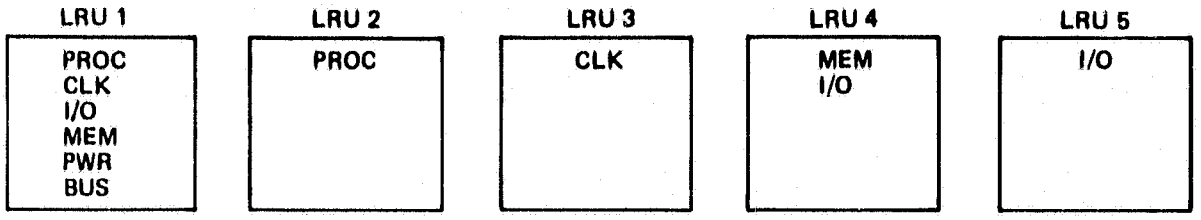

• Current state

Stage	Number good	Number failed
PROC	3	2
CLK	3	2
I/O	2	3
MEM	3	2
PWR	4	1
BUS	4	1

• Station critical dispatch requirements

Stage	
PROC	3
CLK	3
I/O	3
MEM	3
PWR	3
BUS	3

← Fix before flight

Figure 14. Comparison of Fault-Tolerant Flight Control System State and Specified Station Dispatch Requirements

After developing the PASCAL program, it was found that the declaration of set relationships and data structures for FTFCS equipment definition and status recording is relatively simple using SIMSCRIPT. For instance, relationships can be established by means of SIMSCRIPT statements such as:

```
THE AIRPLANE OWNS THE FTFCS
EVERY LRU OWNS A GROUP.OF.STAGES
EVERY STAGE HAS AN IDENTIFICATION.NUMBER,
  A DISPATCH.MINIMUM.COMPLEMENT,
  A TOTAL.FAILED, OWNS A PROCESSOR AND A POWER SUPPLY
  AND BELONGS TO A GROUP.OF.STAGES,
  AND AN FTFCS
```

The declaration defines classes of objects having similar properties and permits data retrieval from computer program variables such as IDENTIFICATION.NUMBER (STAGE). The value of IDENTIFICATION.NUMBER will be found in Word 1 of a STAGE record. TOTAL.FAILED(STAGE) would be updated as the simulation proceeds and failures are generated as described in Section 5.2.5.

5.2.5 Removal-Generator for the Operations and Maintenance Simulation

One method of simulating removals of FTFCS LRUs is to provide a failure generator based on a simple arrangement with components of a given type, in parallel, forming a stage and with stages connected in series.

Rationale—Until a better reliability model is developed, the O&M simulation will approximate realistic maintenance demands and queues for resources. Simplification in this manner means that the dispatch-critical complement of equipment required for flight must be determined in some other way, probably using CARE III, when it is fully developed.

The probability of removing an LRU can be established using terms of a binomial expansion as follows:

If N_i = full dispatch complement of Component Type i (user input or model variable)
and K_i = minimum dispatch complement of Component Type i (user input)
then R_i = probability that a dispatch can be made after a total of t flight hours without repair to any Type i components is given by:

$$R(i) = \sum_{x=K(i)}^{N(i)} \frac{N(i)!}{x!\ (N(i) - x)!} \quad (p**(x)) \quad q**(N(i) - x)$$

where:

p = reliability of one Type i component

$= e**(-\int_0^t a(t)dt)$

q = 1 - p

a = hazard function

t = flight time

e = 2.71828

The combinatorial expression for R_i is valid only when all components of an LRU start out with zero time after repair or the hazard rate is constant.

If R(SYS) is the probability that a dispatch is possible without maintenance to the system, then for J different stages where a stage consists of identical components of Type i, R(SYS) is given by:

$$R(SYS) = \prod_{i=1}^{J} R(i)$$

and the probability of removal is given by 1 - R(SYS).

The combinatorial failure generator provides a method of simulating LRU removals, but does not provide a method of simulating repairs or replacement of components within the LRU. This problem is addressed in Appendix VIII, where a closed-form solution and a SIMSCRIPT simulation solution are provided and are in good agreement. As a result of these comparisons, a failure generator of the type provided in the SIMSCRIPT program of Appendix VIII is proposed.

5.3 ANALYSIS OF INVESTMENT AND OPERATING ECONOMICS

The parameters to be used by the model for purposes of optimization are the present equivalent value of total costs and benefits (TCB) and return on investment (ROI),

which are defined in Section 5.3.1. Total costs and benefits, simply stated, are the result of procuring, operating, obtaining benefits from, and disposing of a product and are expressed as follows:

$$TCB = IC + OC + TA + RCC + OB$$

where:
TCB = total costs and benefits (sec. 5.3.1)
IC = investment costs (sec. 5.3.2)
OC = operating costs (sec. 5.3.3)
TA = tax adjustments (sec. 5.3.4)
RCC = retirement costs and credits (sec. 5.3.5)
OB = operating benefits (sec. 5.3.6)

The convention is adopted that money received is positive (+) and money paid out is negative (-).

5.3.1 Cost and Benefit Measurement Parameters

Investment opportunities may be mutually exclusive (choosing one option rules out all others) or independent. For example, optimization of FTFCS eliminates all but the best alternative, which is the mutually exclusive choice. Possible use of surplus FTFCS computer capacity for add-on functions, such as engine monitoring or navigation, presents independent choices.

For mutually exclusive alternatives produced by different sets of optimization input variables, the scheme selected should be the one that meets a minimum attractive rate of return (MARR) criterion and has the maximum present equivalent value of TCB. Where one of the mutually exclusive alternatives must be chosen, such as fault-tolerant or conventional flight controls, the question to be answered is "for which scheme is an investment difference from a chosen baseline scheme most justified?" For mutually exclusive alternatives, the selection will, therefore, be on the basis of the cost/benefit differences from the baseline scheme (the one with minimum investment cost). In this case, consideration of the costs and benefits of a single scheme is not appropriate, but the differential ROI must exceed the MARR.

For independent alternatives, the alternatives that meet the MARRs are ranked in order of descending ROI. Selections then are made from the top of the list until the desired amount of capital has been invested. Selection criteria are shown in Table 3.

Table 3. Investment Decision Alternatives

	Study type	
	Absolute costs and benefits	Cost differences from baseline
Mutually exclusive alternatives	(not appropriate) ①	Select minimum investment scheme unless additional investment in alternatives exceed minimum attractive rate of return, in which case choose minimum total cost scheme ②
Independent alternatives	Rank by decreasing return on investment and select off the top until capital is exhausted or minimum attractive rate of return is reached ③	(as for ③) ④

Rationale--The primary purpose of the CBDOM is to optimize design by evaluating a series of mutually exclusive alternatives. However, the ability to assess the desirability of the optimized design compared with other independent uses for investment capital also is required by an airline making investment decisions and, therefore, is included in this discussion.

The steps in performing the economic analysis are as follows:

Step 1--Using the details for given FTFCS configurations, calculate the cash paid out or received for each year the equipment is owned.

Step 2—Add up the costs and revenues for each year, keeping each year separate.

Step 3—Calculate the present equivalent value for each year's payments and receipts from the formula:

PEVTCB (J) = TCB(J)/(1 + MARR(J)/100)**J

where:

MARR = percent minimum acceptable rate of return (the rate that just meets the investor's threshold of acceptability)

PEVTCB(J) = present equivalent value of all payments, benefits, and receipts in the Jth year of operation defined in Section 5.3

TCB(J) = total costs and benefits for year J

J = number of years from start of operation (J = 0 is the first year of investment and operation)

Step 4—Steps 1 through 3 are repeated for each design alternative. If subscript K is used to denote the design alternative (e.g., K = 1 is the first design scheme, K = 2 is the second), then:

PEVTCB (J,K) = the present equivalent value of cost of ownership or the sum of all receipts and payments in the Jth year for the Kth design alternative

PEVIC(J,K) = the present equivalent value of investments made in the Jth year for the Kth design alternative

PEVIC(J,K) = IC(J,K)/((1 + MARR(J))**J)

Step 5—As a basis for comparison, choose the design alternative with the lowest present equivalent value of investment cost. For this design alternative, let K = KMIN. For the case where cash benefits are not separately identified, the costs of each scheme can be compared. If the scheme with the lowest present equivalent value of total investment cost is denoted by KMIN, then:

$$EROI(NY,K) = 100\left\{\left\{\left[\frac{\sum_{J=0}^{NY} PEVTCO\,(J,KMIN) - \sum_{J=0}^{NY} PEVTCO(J,K)}{\sum_{J=0}^{NY} PEVIC\,(J,K) - \sum_{J=0}^{NY} PEVIC\,(J,KMIN)} + 1\right]^{\frac{1}{NY}} - 1\right\}\right\} \quad \text{---(1)}$$

where:

EROI (NY,K) = the extra return on investment (the amount by which ROI exceeds MARR) through a period of NY years (expressed as a percent) for Scheme K compared with the scheme requiring the minimum investment (Scheme KMIN)

Note that if the numerical value of the inner term of this equation is between 0 and 1.0, the EROI is negative, and if the inner term is negative, the NYth root is imaginary. For both cases, the EROI (NY,K) must be calculated from the expression below where NY is a positive integer:

$$EROI(NY,K) = -100\left\{\left|\left[\frac{\sum_{J=0}^{NY} PEVTCO\,(J,KMIN) - \sum_{J=0}^{NY} PEVTCO\,(J,K)}{\sum_{J=0}^{NY} PEVIC\,(J,K) - \sum_{J=0}^{NY} PEVIC\,(J,KMIN)} - 1\right]^{\frac{1}{NY}} - 1\right|\right\} \quad \text{---(2)}$$

Rationale--It is not always clear from examining the input data if a given design will produce a positive EROI or, for that matter, a positive net terminal return. Therefore, provisions for calculating negative EROIs has been made by assuming a symmetrical relationship for positive or negative ROI for the same absolute value of cash flow. Equations (1) and (2) also can be used to determine the internal rate of return (equal to the value of MARR for which the EROI = 0). The formula also can be used to determine the net terminal return on investment by making MARR = 0. With a comparison of independent alternatives, those with the highest EROI are chosen until an investment of the desired size has been made. For mutually exclusive alternatives, the preferred scheme is the one with an EROI greater than 0 and the highest value of net terminal cash:

$$\sum_{J=0}^{NY} PEVTCB\,(J,KMIN) - \sum_{J=0}^{NY} PEVTCB\,(J,K)$$

When cumulative benefits are separately identified for each case, then an EROI can be calculated using Equations (1) and (2), with all terms involving Scheme K set to zero.

Step 6—The payback point (PP) is calculated by incrementing J from its starting value until the year JX is found in which the EROI changes sign from its last negative value.

$$PP = (JX - 1) + \frac{-EROI\,(JX - 1)}{EROI\,(JX) - EROI\,(JX - 1)}$$

where:

PP = payback point in years from the start of operation

JX = the year in which the extra return on investment changes sign from its last negative value

EROI (JX - 1) = the last negative value of EROI

EROI (JX) = the next positive value after the (JX -1)th value of EROI. At the start of the first year of operation, the EROI = -100%.)

It is possible that, within the study period (NY), there are multiple payback points. If the maximum EROI does not occur after the last payback point, a study should be made to determine replacement costs and a replacement strategy.

Rationale--Several airlines use payback point. After reviewing the draft model requirements by the airlines, payback point was offered as an alternative decision criteria. The use of MARR = 0 also can be used to provide a payback point in terms of number of years required to recover the investment in actual cash rather than present equivalent value cash.

5.3.2 Investment Cost Definitions

Investment cost (IC) is the cost of all properties and funds required for an airline to set up a business. Investment costs (IC) provided for FTFCS evaluation consist of:

IC = ICAP + ICRS + ICES + ICGS + ICST + ICTM + OTHER

where:

ICAP = airplane parts procurement and installation
ICRS = rotatable spares investment
ICES = expendable spares initial stock
ICGS = ground support equipment
ICST = special tools and test equipment
ICTM = training equipment

Inflation or deflation of any IC not specified by means of a lookup table will be at a standard user-supplied rate (default value = 8 percent per year).

ICAP—The cost of procuring and installing parts on an airplane consists of the price charged by the parts supplier plus the installation costs multiplied by a profit markup factor for the airplane manufacturer.

In addition to the profit markup, new airplanes are subject to a 5 percent progress payment schedule for each of seven quarters before delivery. Thus, the prepayments have the effect of increasing the airplane price by a factor of 1.06 when progress payments are converted to a present value at 15 percent MARR. With the ACES, the user can change the default values of profit markup and prepayment factors. The ACES takes the price per part and quantity per airplane from the data provided as part of the FTFCS component, stage, and system description (sec. 5.2.4). The installation

cost per part, in first year of operation dollars, also is provided by the user as part of the FTFCS description. Prices are inflated to other years in which investment takes place using Table 4 or an inflation factor supplied by the CBDOM user.

Table 4. Material Inflation Percentage

Year	Material increase over the previous year (%)	Year	Material increase over the previous year (%)
1959	---	1969	4.4
1960	0	1970	6.1
1961	0.4	1971	2.8
1962	-0.4	1972	2.9
1963	0.1	1973	5.4
1964	1.7	1974	10.0
1965	2.0	1975	15.0
1966	2.8	1976	7.5
1967	2.3	1977	5.2
1968	2.9	1978	8.6

ICRS—The cost of rotatable spares is the product of the cost per unit in a given year times the quantity required. Quantity will be derived from the O&M simulation, which will be initialized by a spares-provisioning program in the ACES. The spares-provisioning program uses a technique developed by G. Black and F. Proschan[17] under Signal Corps Contract DA-36-039-8C-75012. This program produces the minimum IC quantities of spares from the possible alternatives to achieve a user-specified probability of no stockout of any item in the kit. However, the provisioning routine contains no allocation logic to determine how the quantities of spares provisioned should be distributed around an airline network. In addition, the cost penalty of a stockout is not included in the method of optimization.

In the CBDOM, the existing ACES spares routine will provide a good first estimate of the spares required. The spares quantity then will be optimized for maximum airline profit by allocating spares in quantities determined by the CBDOM response surface exploration described in Section 5.4. Thus, spares will be positioned at stations specified by the model user in optimum quantities defined by the CBDOM. Locations for spares will normally match those used by the airline being represented. If FTFCS spares are located at a new location, the user must supply estimates of IC associated with setting up the new location and any cost incremental to the standard spares holding cost (see sec. 5.3.3—Operating Costs). Table 4 is used by ACES for inflation or deflation of spares from specified year prices.

ICES—This is the cost of providing an initial stock of expendable spares. Materials that are consumed are charged as an operating cost and accounted for under Maintenance Material Operating Cost (MM). It is necessary to invest in a sufficient stock of expendable materials to take care of periods of heavy demand and to take care of the time between placing a replacement order and receiving a delivery. An empirical method[18] that is used by several airlines and has been used in ACES is as follows:

To calculate expendable spares investment, perform the following steps:

Step 1--Calculate the annual usage cost (MM) in dollars as shown below.

Step 2--Inflate or deflate MM to 1977 dollars.

Step 3--Enter Table 5 and determine the number of months of supply (NMS) to be initially provisioned.

Step 4--Arrive at the investment cost, ICES, by applying the following formula:

ICES = MM x NMS/12

where:

MM = maintenance material cost per year per fleet
NMS = number of months stock from Table 5

Table 5. Material Stock Levels

1977 dollars	Number of months stock (NMS)
$ 0 – 199	12-month stock
$ 200 – 499	6-month stock
$ 500 – 999	4-month stock
$1000 – 3000	2-month stock
Over $3000	1-month stock

Annual usage cost can be calculated from the formula:

MM = (NA x UTIL x QPA x FR/1000) x CU

where:

MM = maintenance material cost per year per fleet
NA = number of airplanes in the fleet
UTIL = utilization in flight hours/year/airplane
QPA = quantity of the item per airplane
FR = unit throwaway rate per 1000 flight hours for the average flight length being considered

CU = cost per unit or item

For the CBDOM, ACES will be modified to allow the user to override the values in Table 5.

Rationale--Table 5 is based on work by R. H. Wilson[19] and considers the cost of replenishment and the cost of holding stock to determine an economic order quantity. If a significant number of FTFCS parts turn out to be expendable, a more appropriate algorithm would have to be developed to include penalties of stockout. Optimization of stock would be effected by determining the maximum profit stock level using the optimization technique described in Section 5.4.

ICGS--The cost of ground support equipment includes the procurement cost of stands, slings, jigs, fixtures, tools, gages, jacks, servicing rigs, test equipment, vehicles, and anything used for maintaining, overhauling, repairing and testing airplanes, engines and rigging flight controls. Such items are designed for use with any airplane type, or they become special items and should be included in ICST below. Thus, ICGS would include general-purpose automatic test equipment (ATE).

ICST--The cost of special tools and test equipment includes equipment that can be used only on one airplane or equipment type. General-purpose equipment is to be included in ICGS.

ICTM--This is the investment cost in training equipment for such items as students' notes, models, movies, and training aids. Flight simulators may require modification for different configurations of fault-tolerant systems, and modifications are included as a part of ICTM in such a case.

Provision in ACES for including investment costs for buildings, ramp equipment, and maintenance manuals will be eliminated. The first two items are irrelevant for FTFCS and the last item is normally included in the purchase price, ICAP.

5.3.3 Operating Cost Definitions

Operating costs (OC) consist of all costs associated with operating an airline. Several new cost categories will be provided in ACES to accommodate the detail provided by the O&M simulation output. The definitions below identify costs that are design dependent. Costs such as spares holding, delays, and cancellations do not correspond to the Civil Aeronautics Board (CAB) Form 41 cost breakdown. Operating costs are defined as the sum of the cost entities below:

$$OC = MLL + MSL + MM + SSC + MB + OS + MT + FCT + SH + FCR + DC + CN + DT + CDS + CLP + TCE + TCP + OTHER$$

where:

- Labor-related operating costs

  MLL = maintenance line labor
  MSL = maintenance shop labor
  MM = maintenance materials
  SSC = shop and servicing supplies
  MB = maintenance burden

- Other operating costs

  OS = outside services
  MT = maintenance training
  FCT = flight crew training
  SH = spares holding cost
  FCR = fuel cost reductions
  DC = delay costs
  CN = cancellation costs
  DT = diversion and turnback costs
  CDS = debt servicing
  CLP = lease payments

TCE = equipment transportation costs
TCP = personnel transportation costs

Inflation or deflation of any operating costs not specified by means of a lookup table will be at a standard user-supplied inflation rate (default = 8 percent).

Labor-Related Operating Costs--Include MLL, MSL, MM, SSC, and MB as discussed below.

MLL--Maintenance line labor cost consists of the compensation paid to all personnel engaged in line maintenance of any type, plus the employee insurance, fringe benefits, and pensions that are not directly included in compensation. Subroutine MLABOR of ACES requires modification to accept output from the O&M model instead of input from the user. Maintenance line labor is to be calculated as follows:

$$MLL = \sum_{J=0}^{RAGE} ((ML(J) \times MLBF \times MPW) + (MLOT(J) \times MLOR)) \times BPMH(J)$$

$$ML(J) = \sum_{S=1}^{NS} (MHL(J,S) \times SLF(S))$$

$$MLOT(J) = \sum_{S=1}^{NS} (MHLOT(J,S) \times SLF(S))$$

where:

MLL = maintenance line labor cost in dollars for all J years summed from J = 0 to the retirement age (RAGE) in years

ML(J) = maintenance line labor for the Jth year for regular time in hours (simulation output)

MLOT(J) = maintenance line labor overtime for the Jth year (simulation output)

BPMH(J) = base pay/labor hour for year J (see table 6)[20], dollars

MLBF = maintenance labor fringe benefit factor
= 1.0 (to be included in burden, MB)

MPW = maintenance hours paid to worked ratio
= 1.0 (to be included in burden, MB)

Table 6. Base Pay per Labor Hour

Year	Base $/labor hour (BPMH)	Year	Base $/labor hour (BPMH)
1962	3.28	1971	5.97
1963	3.43	1972	6.54
1964	3.57	1973	7.10
1965	3.72	1974	7.62
1966	3.83	1975	8.46
1967	4.19	1976	9.10
1968	4.31	(1977)	9.99
1969	4.71	(1978)	10.87
1970	5.59	(1979)	11.64

Note: Reference CAB Schedule P10 Form 41. Years in parentheses are estimates, since reporting stopped in the third quarter of 1977.

MLOR = ratio of overtime to base pay BPMH(J)

MHL(J,S) = labor hours line in the Jth year for the Sth skill level obtained as output from the line maintenance simulation. MHL(J,S) for fractions of a year must be multiplied by 365/days simulated.

SLF(S) = skill level compensation ratio for skill level S of NS

$$= \frac{\text{compensation for skill level, S(J=0)}}{\text{compensation base rate, CPMH(J=0)}}$$

MHLOT(J,S) = overtime labor hours line in the Jth year for the Sth skill level obtained as output from the line maintenance simulation. MHLOT(J,S) for fractions of a year must be multiplied by 365/days simulated.

$$\text{MHLOTF(J,S)} = \text{MHLOT(J,S)} \times \frac{\text{overtime compensation rat}}{\text{regular time compensation rate}}$$

MSL--Maintenance shop labor is calculated in the same way as MLL, except that MHL(J,S) and MHLOT(J,S) are changed to MHS(J,S) and MHSOT(J,S) wherever they appear and are obtained from the repair shop simulation. These changes affect subroutine MLABOR of ACES.

MM--Maintenance materials is the total cost of maintenance materials plus expendable parts purchased in a given year to replace those consumed. Maintenance material usage is generated only in the simulated repair shops. Input to ACES from the O&M simulation will be directly in units of dollars material cost per fleet per year in a specified year's dollars. Subroutine MMATER of ACES must be changed to accommodate the alternative input, and inflation or deflation of specified year's dollar input will be in accordance with Table 7. Further work is required to validate and extend Table 7 for flight control system maintenance materials.

Table 7. Material Inflation Factors

Year	Inflation factor	Material increase[a] (%)	Year	Inflation factor	Material increase[a] (%)
1959	0.5696	–	1969	0.6683	4.4
1960	0.5696	0	1970	0.7090	6.1
1961	0.5719	0.4	1971	0.7289	2.8
1962	0.5696	-0.4	1972	0.7500	2.9
1963	0.5702	0.1	1973	0.7905	5.4
1964	0.5799	1.7	1974	0.8696	10.0
1965	0.5915	2.0	1975	1.0000	15.0
1966	0.6081	2.8	1976	1.0750	7.5
1967	0.6221	2.3	1977	1.1309	5.2
1968	0.6400	2.9	1978	1.2282	8.6

[a]Over the previous year

SSC—Shop and servicing supplies cover the cost of supplies and expendable small tools and equipment used in maintaining, servicing, and cleaning property and equipment that cannot be directly assigned to a specific job or type of work. Because a cost-estimating relationship is not available for SSC, the analyst must estimate it using the "Other" cost category provided in ACES for input.

MB—Maintenance burden (or overhead) is a total airline system-related cost that has been allocated back to airplane types. It is not an airplane- and engine-originating cost like fuel consumption or direct maintenance material consumption and is not a property of an airplane type as reported to the CAB.

Total maintenance costs are divided according to CAB Form 41 into three direct charge accounts for airframe, engines, and other. An indirect account, burden, is further subdivided into a number of accounts, comprised as follows:

- Labor for ground property and equipment
- Material for ground property and equipment
- Maintenance trainees and instructors
- Unallocated labor
- Communications personnel
- Recordkeeping and statistical personnel
- Purchasing personnel
- Other personnel
- Utilities (heat, light, power, water)
- Outside services
- Rentals
- Shop, servicing supplies
- Employee benefits
- Payroll taxes

CAB-reported burden is, in fact, an inseparable mixture of airline-sensitive and airplane-sensitive elements. Airline-sensitive elements include a very large number of independent and interdependent elements, among them being:

- The mix of airplane types
- Route structure
- Geography and climate
- Maintenance philosophy
- Labor union contractual provisions
- Efficiency
- Management intrastructure

To compound the analytical problem, a great deal of latitude is inherent in CAB reporting requirements, so that tremendous differences exist among various airlines flying identical equipment. As deregulation continues, even this flawed (from the standpoint of making airplane comparisons) data base is likely to disappear. Given this environment, it would be tempting to ignore burden altogether. Yet, to do so would bias comparisons. For example, a maintenance scheme that relies on rotatable spares and is, therefore, labor-intensive, would not be correctly compared with one that relies upon replaceable spares and is material intensive. In other words, one recognizes that there is a design-sensitive burden to be compared among designs, and this entity is what CBDOM attempts to handle. Design-sensitive burden, then, and CAB Form 41 burden are distinct entities. The former is appropriate to design comparisons; the latter is useful for assessing financial aspects of particular airline operations. Users of CBDOM are cautioned that these two types of burden are related only because they share some common terminology. This does not preclude the use of CAB data inferences where appropriate, such as labor fringe benefit factors and the ratio of support personnel to direct labor.

Design-sensitive burden includes two major elements:

- Labor burden
- Labor and material for maintenance of ground property and equipment

Spares holding cost, outside services, and shop and servicing supplies, which also are design-sensitive and normally included as burden in CAB Form 41, are separated out in the CBDOM under SH, OS, and SSC.

Use of design-sensitive burden represents an improvement of the method currently used in ACES. The subroutine MBURDEN of ACES must be changed to replace maintenance burden by design-sensitive burden.

Design-sensitive burden elements consist of:

- Payroll taxes
- Fringe benefits
    - Insurance
    - Pensions
    - Educational reimbursement
- Nonproductive time
    - Vacations
    - Sick leave
    - Holidays

- Support personnel
  - Guards
  - Custodians
  - Building tradesmen
  - Tool crib attendants
- Administration
  - Timekeeping
  - Payroll

Algorithms for labor burden follow, in the same order.

- Payroll Taxes--Federal payroll taxes (FICA) will be applied to direct wages at the 1979 rate of 6.13 percent, escalating at an additive rate of 0.1 percent/year after 1979. The State rate will be computed at 50 percent of the Federal rate. For a composite rate of 9.2 percent, escalating at 0.15 percent/year, the multiplicative factor is 1.092 + 0.0015/year after 1979.

- Fringe Benefits According to CAB Statistics--The 1979 fringe benefit factor is 1.23 x direct wages, escalating at 1 percent per annum, additive.

- Nonproductive Time--The ratio of total time to productive time is 2080/1870 = 1.113.

- Support Personnel--The best estimate of this is obtained from CAB Form 41 data, which show that unallocated shop labor is equal to 20.0 percent of total burden. Since the average ratio of total burden to direct labor is 2.7:1, this category is equal to 2.7 x 20 percent = 54 percent of direct labor. The multiplicative factor is, therefore, 1.54.

- Administration--Administrative costs are estimated as 1/2 percent of payroll.

As an example, for 1979 the overall multiplicative factor applied to direct labor is:

$$1.092 \times 1.23 \times 1.113 \times 1.54 \times 1.005 = 2.314$$

For 1980 the overall factor would be:

$$(1.092 + 0.0015) \times (1.23 + 0.01) \times 1.113 \times 1.54 \times 1.005 = 2.335$$

This implies that the labor-related charges account for (2.314/2.7) x 100 = 86 percent of total burden.

Labor and Material for Maintenance of Ground Property and Equipment--The labor component comes to 3.75 percent of total burden, which averages 2.7 times direct labor; 2.7 x 3.75 percent = 10.1 percent of direct labor. This figure is supplied to guide the analyst who must input this cash flow for FTFCS into the CBDOM.

- OS--Outside services will be used as a separate cost category for FTFCS equipment repaired by an associated or nonassociated company. Input to ACES will be from the O&M simulation in terms of ORPY, the number of total outside repairs by year; ORMH, the average outside repair man (labor) hours per repair;

ORMM, the average outside material cost per repair; and the year dollars associated with the material cost. A new subroutine is required in ACES for handling OS as follows:

$$OS(J) = [(ORMH \times BPMH(J) \times OSB) + (ORMM(B) \times MMF(J)] \times ORPY(J) \times OSPM$$

where:

OS(J) = outside services cost in dollars for year J for the fleet

ORMH = average outside repair man (labor) hours per repair

BPMH(J) = base pay per man (labor) hour (see table 6) for year J

ORMM(B) = average outside repair material cost per repair for the user-specified base year B

MMF(J) = inflation/deflation factor to convert maintenance material costs from year B to year J. Factors are provided in Table 6.

ORPY(J) = the number of outside repairs for the fleet in year J

OSB = outside services burden factor (default = 2.335 for 1980) (see MB)

OSPM = outside services profit markup factor (assumed default = 1.15). Further work is required to validate this value.

Rationale--Outside services are included as a new element of ACES to permit determination of the optimum repair level for equipment. While outside service expenditure for the larger airlines is small, the use of outside services and facilities may avoid investment in infrequently used equipment or avoid shortages and delays due to an inability to handle peak work loads.

- MT—Maintenance training consists of nonrecurrent and recurrent training associated with the introduction of new equipment. A method of estimating maintenance training cost has not been developed.

- FCT—Flight crew training consists of nonrecurrent and recurrent training associated with the introduction of new or modified airplanes. A method of estimating flight crew training cost has not been developed.

- SH—Spares holding cost is the annual cost of holding rotatable and expendable spares and materials in stock, consisting of:

  - Warehousing
  - Recordkeeping
  - Administration of stocks and stores
  - Inventory taxes
  - Insurance

Spares holding cost can be estimated from the formula:

SH = SHP x (ICRS + ICES) x MMF/100

where:

SH = spares holding dollars per year per fleet

SHP = spares holding cost percentage of inventory
= 10 percent (a user override for SHP will be provided for the CBDOM)

ICRS = rotatable spares investment

ICES = expendable spares and material investment

MMF = maintenance material inflation factor

In the above expression, SHP (the holding cost as a percentage of inventory) is based on an industry-accepted figure of 25 percent, which includes "cost of capital." Since "cost of capital" is accounted for in the CBDOM by using present equivalent value accounting with an MARR of 15 percent, the residual holding cost is 10 percent. Of this 10 percent, approximately 25 percent is recordkeeping and administration. Recordkeeping and administration are included in maintenance burden in CAB Form 41 reports, but for design analysis have been separated out as a function of spares inventory value. Further work is required to verify the industry-accepted spares holding costs.

- **FCR**—Fuel cost reductions due to eliminated weight or drag are to be separated from fuel cost penalties (FCP) resulting from weight and drag increases, but are calculated in the same manner. ACES does not currently provide for separation of costs and benefits, and a subroutine for this purpose will be added. Incremental fuel saved or burned is determined by the CBDOM user from airplane aerodynamic and engine performance data in units of weight of fuel burned per unit of incremental weight change per flight hour. Typical mission summaries are shown in Table 7, and the resultant incremental reduction or cost of weight are provided in Table 8 for the average flight lengths of Table 9.

The fuel used/flight hour in Table 8 is accurate only for the average flight of Table 7. The exact determination of error in applying fuel used/flight hour based upon average flights to shorter or longer flights has not been established.

FCR is currently calculated as shown below. User inputs can be changed to metric (KMS) units if preferred by NASA.

FCR = FCPA x WIC x UTIL x NA x DG/PG

where:

FCR = fuel dollars change/fleet/year

WIC = weight increment change, pounds

UTIL = utilization in flight hours/airplane/year

Table 8. Cost of Additional Airplane Weight, Based on 3000 Flight Hours/Year

Airplane model	707-320B	727-100	727-200	737-200	747-200	747SP
Kilograms of fuel/ flight hr/kg of weight	0.05636	0.03707	0.03964	0.04688	0.04978	0.04969
Weight of fuel/ additional weight/yr (kg)	169.1	111.2	118.9	140.6	149.4	149.1
Cost of 1.0 kg weight/year						
30¢/gal	16.69	10.98	11.75	13.89	14.75	14.75
40¢/gal	22.26	14.64	15.65	18.52	19.66	19.66
50¢/gal	27.82	18.29	19.58	23.13	24.58	24.58
60¢/gal	33.37	21.95	23.47	27.76	29.49	29.49

NA = number of airplanes in the fleet

DG = fuel price, dollars/gallon

PG = pounds/gallon of fuel (equals 6.7)

FCPA = pounds of fuel consumed/pound of added weight (or saved/pound of reduced weight)/airplane/flight hour

Fuel consumed because of drag (FCD) can be derived from the expression below. However, ACES requires the user to convert drag to a weight equivalent for use in the algorithm for FCR.

$$FCD = FCPD \times DIC \times UTIL \times NA \times DG/PG$$

where:

FCD = fuel dollars change/fleet/year

DIC = drag increment percent change

UTIL = utilization in flight hours/airplane/year

NA = number of airplanes in the fleet

DG = fuel price, dollars/gallon

PG = pounds/gallon of fuel (equals 6.7)

FCPD = fuel consumed/1 percent increase in drag in kilograms of fuel/flight hour

= 36.28 kg of fuel/flight hour for a 707-320B with 3.23 hours average flight length

Table 9. Mission Summary

Model	707-320B	727-100	727-200	737-200	747-200	747SP
Engines	JT3D	JT8D-7	JT8D-9	JT8D-9	JT9D-7A	JT9D-7A
Average flight (hr)	3.23	1.16	1.11	0.80	5.38	7.55
Average flight (km)[a]	2 576	793	734	526	4 637	6 618
Payload (kg)	8 437[b]	5 307[b]	7 575[b]	6 214[b]	44 920[c]	30 402[c]
Reserves (kg)	6 468	4 536	4 536	3 175	16 284	14 515
OEW (kg)	64 864	40 370	45 359	28 576	170 006	144 923
Fuel consumed per flight (kg)	13 376	3 931	4 073	1 960	57 565	65 771
Brake release gross weight (kg)	93 145	54 143	61 543	39 925	288 485	255 372
Climb speed schedule						
U.S. rules KEAS/Mach	No 300/0.78	Yes 280/0.75	Yes 280/0.75	Yes 280/0.65	Yes 320/0.81	Yes 320/0.81
Cruise Mach	0.78	0.80	0.80	0.72	0.84	0.85
Cruise altitude (m)	11 887	10 668	10 668	9 144	10 668	12 497
Descent speed schedule						
U.S. rules KEAS/Mach	No 260/0.78	Yes 280/0.80	Yes 280/0.80	Yes 280/0.75	Yes 320/0.81	Yes 320/0.81
Temperature	Standard day	Standard day	Standard day	Standard day	Standard day	Standard day
Winds	0	0	0	0	0	0

[a]Based on scheduled carrier data, cumulative through July 1974 for 707, 727, 737 and based on September 1974, September 1975 and September 1976 for the 747

[b]Nominal 55% passenger load factor + cargo

[c]55% load factor with volume limit of cargo

= 24.04 kg of fuel/flight hour for a 727-100 with 1.16 hours average flight length

= 27.22 kg of fuel/flight hour for a 727-200 with 1.11 hours average flight length

= 20.41 kg of fuel/flight hour for a 737-200 with 0.8 hour average flight length

= 107.96 kg of fuel/flight hour for a 747-200 with 5.38 hours average flight length

= 88.00 kg of fuel/flight hour for a 747SP with 7.55 hours average flight length

ACES will be modified to accept weights and fuel cost in KMS or foot, pound, second (FPS) systems. As with the formula for fuel burned due to added weight, the drag cost-estimating relationship is provided as an approximate guide. In studies where a more accurate answer is required or where drag represents a significant portion of total cost, a detailed performance analysis is required.

- DC—Delay costs for the airplane are calculated in ACES by evaluating three tangible costs consisting of:

  - Passenger handling costs
  - Extra crew costs
  - Lost passenger revenue

During Phase II, an airline survey is proposed to determine the values placed by airlines on loss of goodwill due to delays and to determine more exactly the loss of passenger revenue. In the interim, the following method is currently used by ACES:

$$DC = (PHC + ECC + LPR) \times SQA \times DPC \times ADM \times UTIL \times NA \times DRC/(AFLH \times 6000)$$

where:

DC = delay cost dollars/year/fleet

PHC = passenger handling cost, dollars/seat delay hour

PHC(76) = 0.2171

ECC = extra crew cost, dollars/seat delay hour

ECC(76) = 2.442 - 0.0038 SQS

LPR = lost passenger revenue, dollars/seat delay hour

LPR(76) = (LF x (27.5689 AFLH - 1.373) x 0.8712 EXP(0.0454 - 0.2271 AFLH))/(1 + 1.3877 AFLH)

SQS = seat quantity, standard for airplane type (see table 10)

Table 10. Standard Airplane Seating

Airplane	Standard-quality seating (SQS)
737-200/DC9-40	115
727-200	131
DC10-10	270
L-1011	268
707/DC8	143
747	385

LFR = load factor (decimal, not percent)

SQA = seat quantity, actual

DPC = delays/100 flights

ADM = average delay time/delay (minutes)

UTIL = utilization in hours/year/airplane

NA = number of airplanes in the fleet

AFLH = average flight length (hours)

DRC = delay rate correction factor

$$= \frac{F \times AFLH + 1 - F}{F \times DAFL + 1 - F}$$

DAFL = average flight length (hours) associated with DPC

F = flight hour/flight cycle factor for 1-hour flight from Table 11

Table 11. Flight Hour/Flight Cycle Failure Factors by ATA System for a 1-hr Flight

System		Factor	System		Factor
21	Air conditioning	0.58	52	Door	0.51
22	Automatic flight	0.59	53	Fuselage	0.50
23	Communications	0.66	54	Nacelle and pylon	0.90
24	Electrical	0.74	55	Stabilizers	0.49
25	Equipment and furnishings	0.38	56	Window	0.90
26	Fire protection	0.25	57	Wing	0.49
27	Flight control	0.92	71	Powerplant	0.98
28	Fuel	0.94	72	Engine	0.89
29	Hydraulics	0.98	73	Engine fuel	1.00
30	Ice and rain removal	0.97	74	Ignition	1.00
31	Instruments	0.65	75	Engine air	0.29
32	Landing gear	0.18	76	Engine control	1.00
33	Lighting	0.78	77	Engine indicators	0.85
34	Navigation	0.67	78	Exhaust	0.45
35	Oxygen	0.55	79	Engine oil	0.57
36	Pneumatics	0.26	80	Starting	0.67
38	Water and waste	0.33	82	Water injection	0.45
49	APU	0.90	99	Overall airplane	0.78

Note: Based on an analysis of 727 commuter and regular operation.

Since DPC is no longer a user prediction based on historical delay data for a given historical flight length, but is derived from the O&M simulation, the delay rate correction factor DRC is not required and should be set to 1.0 in ACES. The derivation of the above formulas is detailed in D6-40895-1[21]. An abstract of Reference 21 is provided in Appendix XI, which shows the method of derivation of delay and cancellation costs. The formulas in Reference 21 have been transposed to the forms above using the following relationships and appropriate inflation factors:

S = (AFLH - 0.2)/1.93

d = 0.4277 + 0.5867 x AFHL

where:

S = flight length in 1000s of statute miles
d = hours after which a delay becomes a cancellation

Inflation and deflation factors necessary to convert delay costs to other years are provided in Table 12 and are derived from CAB Form 41 reported pilots' and copilots' pay (Account 23) for major domestic carriers.

Table 12. Pilot and Copilot Pay Inflation Factors

Year	Flight crew factor
1967	0.4847
1968	0.5485
1969	0.5960
1970	0.6570
1971	0.7040
1972	0.7370
1973	0.7737
1974	0.8436
1975	0.9439
1976	1.0000

Inflation factors for 1977 and on are calculated as shown below:

FCF(J) = flight crew inflation factor for the Jth year of operation

FCF(J) = (1 + (FCINF/100))**(YEAR + J - 1976)

where:

FCINF = flight crew annual inflation rate as a percentage
= 8.0 percent for design studies

YEAR = calendar year for the start of operation

- CN—Cancellation costs consist of all the costs of a delay up to the time the flight is cancelled plus costs associated with loss of airplane use for the flight hours it is out of service. Calculation of the delay cost portion of cancellations is based on the average delay time preceding a cancellation, ADMC.

  $$CN = (CNDC + CNDL) \times CNPM \times UTIL \times NA/(1000 \times AFLH)$$

  where:

  CN = cancellation dollars/year/fleet
  CNDC = cancellation delay, dollars/cancellation (see below)
  CNDL = cancellation downtime, dollars/cancellation (see below)
  CNPM = cancellations/1000 departures/airplane
  UTIL = utilization, flight hours/year/airplane
  NA = number of airplanes in the fleet
  AFLH = average flight length in hours

- Cancellation, Delay Cost Contribution—For the above expression for CN:

  $$CNDC = (PHC + ECC + LPR) \times SQA \times ADMC \times DRC/60$$

  where:

  ADMC = average delay minutes preceding cancellation
  $= 25 + 35.2 \times AFLH$

  AFLH = average flight length in hours

  See DC (delay cost) for all other quantities.

  ACES requires changing to accept CNPM and ADMC as outputs of the O&M simulation. The algorithm for determining the value of ADMC as a function of flight length is no longer required and will become a user input for each station type.

- Cancellation Downtime Loss Contribution--For the above expression for CN:

  $$CNDL(1972) = 0.003 \times OEW \times FHL$$

  where:

  OEW = operating empty weight, pounds
  FHL = flight hours lost

  It should be noted that the above does not include the costs of eliminating problems that cause the cancellation. Such problems, when mechanical, will be included in maintenance labor and material, ML and MM. ACES will be changed to accept OEW in both KMS and FPS units.

- DT—Diversions and turnbacks will be simulated in the O&M simulation when equipment drops to a turnback-critical complement of components. A new subroutine is to be added to ACES to accommodate diversions and turnback costs as follows:

$$DT(1977) = 0.0067 \times (517\ AFLH - 103) \times SQA \times DTY \times NA$$

where:

DT = diversions and turnback dollars/year/fleet (1977 dollars)

AFLH = average flight length, hours

SQA = seat quantity/airplane, actual

DTY = number of diversions and turnbacks/airplane/year obtained from the simulation

NA = number of airplanes in the fleet

- CDS—The cash flow due to servicing, obtaining, and repaying debt is to be included in ACES. CDS includes all cash flows associated with debt, namely, receipt of a sum at time J = 0 equivalent to all investments made, interest payments (CIP) on the debt, and repayment of debt in the final year J = DEBTL.

Since CIP can be deducted from income before taxes, it must be included as a term in XITAXP in ACES subroutine TAXCD and its present equivalent value calculated in subroutine CUMPEX. The income from unallocated debt funding will be neglected since it is nonexistent with a mature fleet size at the J = 0 year and small for the more realistic fleet build-up case. For simplicity, a single debt repayment is assumed to be effected in the DEBTLth year.

The following additional inputs to ACES are required:

DEBTL = the term of the debt in years. The retirement age of equipment (RAGE) is to be used as a default for DEBTL.

DEBTI = the percentage annual interest paid on the debt (default = 9)

Interest payments in the Jth year are given by:

$$CIP = ICSUM \times DEBTI/100$$

where:

$$ICSUM = \sum_{J=0}^{RAGE} (ICAP(J) + ICRS(J) \ldots\ldots)$$

where:

ICSUM = sum of all investment costs

CIP = interest payments (of equal size) for each year

CDS(J) = debt cash flow in year J

$$CDS(J) = -ICSUM + CIP;\ \text{for } J = 0$$
$$= CIP;\ \text{for } J = 1 \text{ to } (DEBTL - 1)$$
$$= ICSUM + CIP;\ \text{for } J = DEBTL$$

where:

$$CDS = \sum_{J=0}^{DEBTL} CDS(J)$$

CDS = cumulative debt servicing cost

Present equivalent value of debt servicing cost PEVCDS(J) is calculated as follows:

$$PEVCDS\ (J) = \frac{CDS\ (J)}{(1 + MARR\ (J) / 100) ** J}$$

$$PEVCDS = \sum_{J=0}^{DEBTL} PEVCDS\ (J)$$

- CLP—This is the negative cash flow of lease payment, made for a defined period of time by a lessee airline operator to the lessor who is the actual owner of the equipment. All investment tax credits and depreciation are to the benefit of the lessor; therefore the lessee's payments are treated as a pure expense item that is deducted from the gross income (or savings) generated by the leased equipment. Recall that savings and benefits have the same tax consequences as actual income. Because leases are not investments, competing lease schemes should not be ranked using the investment criterion of EROI; instead the present values of the various alternatives should be used for ranking. This would apply even for those alternatives that are not leases.

  Since CLP is deducted from income before taxes, it must be included as a term in XITAXP in ACES subroutine TAXCD, and its present equivalent value must be calculated using CUMPEX.

  For simplicity, only equal lease payments will be treated, and the value of purchase options will not be included. This simplification, however, corresponds to contemporary reality, in which variations on equal payments are seldom encountered.

  The following additional inputs are required: annual lease percentage (ALP) (default 12) and the final year of the lease (FINL). While debt payments are made in arrears (i.e. after use of the money), lease payments are customarily made in advance.

The annual lease payment is a complex function of the lessor's cost of capital, the lessor's tax situation, the duration of the lease, the residual value of the equipment at lease end, and the requirements of lessor, lessee, and (frequently) the lender. In the 1979 business environment, a reasonable default value for a long-term lease will be ALP = 12 percent of the value of the leased item's ICSUM. Other percentage values may be input at the option of the analyst.

Lease payments in the Jth year are given by:

CLP(J) = ICSUM x APL/100

where:

ICSUM = all investments (also see debt servicing CDS)

$$ICSUM = \sum_{J=0}^{RAGE} (ICAP(J) + ICRS(J) \cdots\cdots)$$

$$CLP = \sum_{J=0}^{FINL} CLP(J)$$

CLP = cumulative lease payments

Present equivalent values of lease payments are calculated as follows:

PEVCLP(J) = CLP(J)/((1 + MARR(J))**J)

$$PEVCLP = \sum_{J=0}^{FINL} PEVCLP(J)$$

When lease is used in ACES, the input will be made in the same manner as for investments. After ICSUMhas been used to calculate CLP, the investment costs and associated investment tax and depreciation allowance will be zeroed out.

- TCE—Transportation costs for equipment are the costs for packing and shipping rotatables and components between stations and vendors.

TCE = SC + PC

where:

TCE = transportation cost in 1979 dollars/shipment in the continental U.S.

SC = shipping cost (air freight)/one-way shipment, $35.00 minimum plus $0.4536/kg ($1.00/lb) for excess weight over 15.88 kg (35 lb), in 1979 dollars

PC = packing and unpacking cost at 30 minutes for each operation ($30.00, burdened 1979 dollars)

The calculation of TCE requires a new subroutine in ACES, and packaged weight should be taken as component weight times 1.25. Component weight is a user input.

- TCP--Transportation costs for personnel are the costs of flying mechanics to and from stations requiring support and are given by the expression:

TCP = (TFHC x RSFT) + (TSHC x TST)

where:

TCP = cost per round trip, 1980 dollars

TFHC = charter flight cost per hour multiplied by jet-to-charter flight speed ratio of 4
= 400 (in 1980 dollars)

RSFT = round trip jet scheduled flight time in hours

TSHC = transportation standby cost in dollars/hour
= 20 (in 1980 dollars)

TST = transportation standby time in hours

5.3.4 Tax Adjustments

Tax adjustments (TA) that apply to fault-tolerant flight control systems may consist of three tax entities as shown below. The following paragraphs describe ITC, TDA, and INC.

TA = ITC + TDA + INC

For airlines that are not in a position to take advantage of tax credits because of inadequate income, a new provision is required for ACES to eliminate all tax adjustments. Selecting the alternative to a lease (sec. 5.2.3, CLP) eliminates ITC and TDA.

ITC--Investment tax credit for airplanes and capitalized equipment (except buildings) procured between January 25, 1975 and January 1, 1981, a U.S. credit of 10 percent of the basis value may be deducted from tax that would otherwise be paid. The 1978 Congressional tax bill makes the 10 percent ITC permanent for 1981 (and on) subject to the limitations detailed with the formula for ITC. The ITC can be derived from the formula:

ITC = ITF x (ICAP + ICRS + ICGS + ICST + ICTM + OTHER)

where:

ITF = investment tax credit factor (0.1 from Jan. 25, 1975)

ICAP, ICRS, ICGS, ICST, ICRE, and ICTM are defined under investment costs (sec. 5.3.2). The amount of investment tax credit that can be claimed is limited to $25,000 + 60 percent of tax in excess of $25,000 during 1979, and the percentage increases each year as shown below:

- 1979--60 percent
- 1980--70 percent
- 1981--80 percent
- 1982--90 percent

The assumption is made that sufficient tax is paid to take advantage of all credits as they occur except for the two new options detailed under TA above.

TDA--Tax Depreciation Allowance--Under Advanced Revision Procedure 76-37 (IRS-1690)[22], air transport equipment used in commercial and contract carrying of passengers and freight may be depreciated in as little as 9.5 years for equipment purchased after April 15, 1976. For design study purposes, a tax depreciation life of 10 years will be used. Each year's depreciation may be treated as an expense that is deductible from pretax income. Since corporate tax on U.S. income consists of 46 percent Federal taxes plus approximately 2 percent State taxes, the tax depreciation allowance is equivalent to a 48-percent credit of each year's depreciation. For design studies, tax depreciation allowance is calculated from the formula:

$$TDA = TDF \times 0.48 \times (ICAP + ICRS + ICGS + ICST + ICTM + OTHER)$$

where the tax depreciation factor, TDF, is obtained from Table 13 and ICAP, etc., can be obtained from preceding definitions under IC (investment cost).

For those airlines unable to take advantage of the fastest allowable depreciation because of tax carryovers or anticipated losses, provision will be made for the user to provide his own values for Table 13 for up to 15 years. Note that Table 13 depreciates equipment to a zero residual value and any cash received on retirement will be taxed as regular income.

Table 13. Tax Depreciation Schedule

Year	Tax depreciation factor
1	0.2000
2	0.1600
3	0.1422
4	0.1244
5	0.1067
6	0.0889
7	0.0711
8	0.0533
9	0.0356
10	0.0178

Note: With double declining balance and switch to sum of the years' digits in the third year.

Note also that ordinary and necessary expenditures paid or incurred during the year for repairs to depreciable property are allowable expenses and are deductible for the current year. Expenditures during the year that substantially prolong the life of the property, or that increase its value or adapt it to a different use, are ordinarily classified as capital expenditures and are recovered through annual depreciation deductions over the useful life of the property. For example, after 50,000 flight hours an airplane undergoes a major structural overhaul that extends its life for another 30,000 hours. The depreciated value of the airplane then would be increased by the cost of the work and treated as an investment under ICAP.

INC—Federal and State income taxes for design studies are at 48 percent of gross income less allowable expenses. It may be assumed that all costs included in OC (sec. 5.3.23 are allowable. Therefore, by subtracting allowable expenses before calculating income tax, the impact of operating costs is reduced and can be treated as a credit on costs and a debit on benefits. ACES requires no change.

5.3.5 Retirement Costs and Credits

Equipment retirement may be planned to take place at the end of its useful life, or it may be premature as a result of obsolescence or failure. Both costs and income may result from retirement. Standard accounting practice assumes that net salvage receipts at the end of the planned life (RAGE) will be 10 percent of the original equipment price after all retirement expenses have been paid. However, further work is required to check the validity of the 10 percent assumption, and it is clearly inappropriate to use it for equipment prematurely surplused before obsolescence or wearout.

NRC—Net retirement credit may be estimated from the formula:

$$NRC = RS + RP$$

where:

RC = retirement net dollars/fleet in the year of retirement

RS = retirement sales income, dollars/fleet for the year of retirement

RP = retirement preparation cost for overhaul, refurbishing, and inspection, dollars/fleet in the year of occurrence

If, at the time of retirement, the value of NRC exceeds the depreciated value used for depreciation tax credit, the net difference is taxed as a benefit. ACES does not have a subroutine to calculate NRC.

5.3.6 Operating Benefits (OB)

Positive cash flows produced by a given FTFCS are defined as operating benefits. Positive cash flows might be generated as a result of:

- Increased payload for a specified range
- Increased range for a specified payload
- Increased passenger appeal (and demand) as a result of improved ride quality and dispatch reliability

Provision will be made for the analyst to input benefits of a specific fault-tolerant system configuration into the CBDOM in units of dollars (of a specified year) per flight hour for flights of a given length. In addition, the ratio of flight hour-to-flight cycle benefit must be specified so that a benefit per flight hour for flights of any length can be calculated. Thus, the assessment of benefits will be external to the CBDOM, at least until the proposed Phase III of this study, when consideration could be given to incorporating features for evaluation of increased payload, range, and ride quality.

Entities that decrease costs, such as reduced weight, reduced drag, improved flight plan scheduling, reduced maintenance, or fewer delays, are normally included as operating costs (OC).

5.3.7 Economic Risk Analysis

For the CBDOM, risk is defined as the probability that the ROI is less than the MARR.

The ability to perform sensitivity analyses and risk analyses will be provided for the combination of the O&M simulation and the modified ACES economic analysis. The method entails two steps:

Step 1—Running the CBDOM until the optimum FTFCS configuration has been identified based on point estimates for user-supplied input.

Step 2—Varying component reliability, repair time, and purchase price about their average value to produce probability distributions for ROI and after-tax disposable income.

The above procedure might well produce the situation illustrated in Figure 15, where the configuration with the greatest ROI also has the greatest probability of being less than the MARR. The CBDOM user must make the final selection.

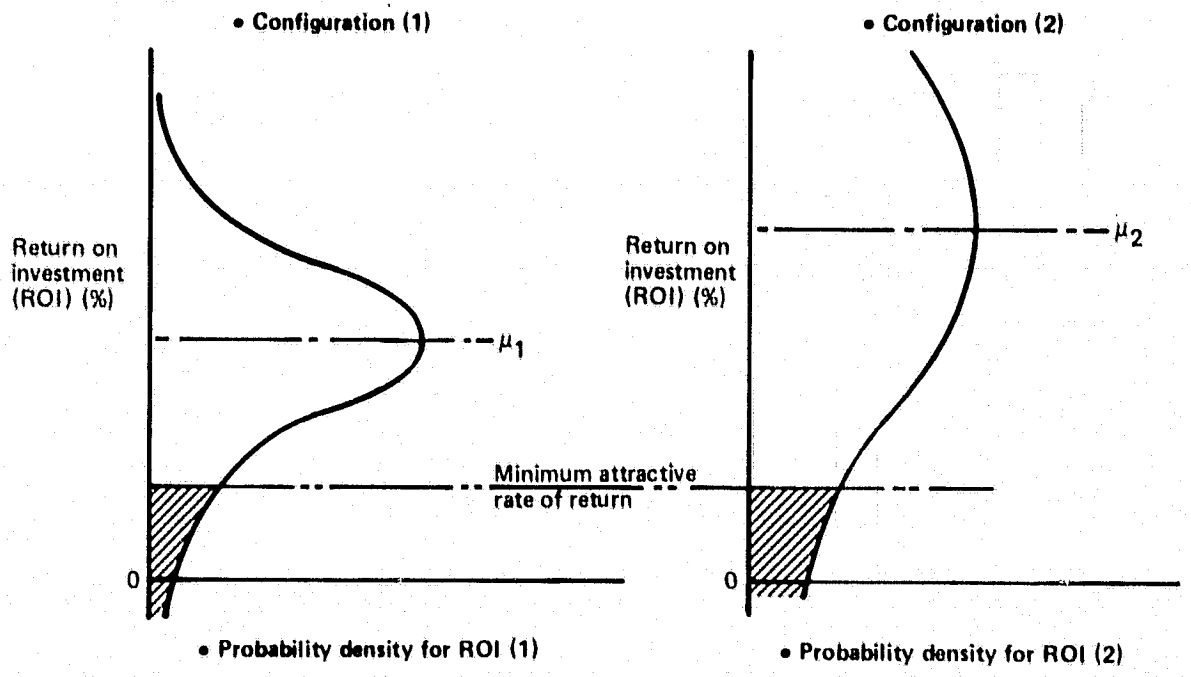

Figure 15. Risk Analysis

5.4 OPTIMIZATION

Incorporating an optimization method is an essential feature of the model because of the number of design variables possible with FTFCS.

5.4.1 The Optimization Problem

The FTFCS simulation output can be viewed as a response function, whereby feasible input variable values are converted into output or response variable values. However, this function cannot be defined analytically due to the complex nature of the simulation. Very little is known about its mathematical form (i.e., the shape of the functional surface in multi-dimensional space). However, some general observations can be made.

It is reasonable to infer that the functional relationship between FTFCS simulation output variables and input variables is both nonlinear and discontinuous. Consider any cost benefit measurement variables (outputs) that are optimization candidates, such as profit, ROI, risk (the probability of achieving less than the MARR), and payback point. According to the simulation, the cost benefit measurement variables are functions of configuration variables (inputs) such as labor, maintenance equipment, and FTFCS components; i.e., clocks, memories, processors, sensors, etc. Due to the complex nature of the simulation logic, the explicit form of these functional relationships is unknown. The prudent a priori assumption is to expect the simulation response surface to be quite irregular; i.e., highly nonlinear. Moreover, many of the configuration variables can assume only integer values (e.g., the number of actuators, sensors, and computers in an FTFCS configuration). This means that the functional relation between simulation inputs and outputs is inherently discontinuous.

The selection of an optimization procedure must be guided by these response surface characteristics. Success requires building carefully on a simple, robust optimization method that can provide results in a variety of simulation environments. As discussed in Section 5.4.3, the Nelder and Mead method appears to provide the required capability and is a point of departure for optimization methods development in Phase II.

To solve for optimum FTFCS design parameters, the method minimizes or maximizes one cost benefit response function (such as profit) subject to constraints on the others (such as payback point or risk). The optimization is an iterative process, with the optimizer interrogating the simulator for performance estimates at revised values of the configuration variables. Figure 4 depicts the general optimization procedure.

The ability of the optimizing procedure to effectively handle a discontinuous and nonlinear response surface is of little consequence, unless it has a credible response surface to explore. The issue of response surface credibility originates from two sources: the model variability and the model sensitivity or conditioning.

The issue of model variability is inherent to the type of simulation model. The CBDOM is a stochastic or Monte Carlo simulation, meaning that model outputs depend, in part, on the outcome of probabilistic phenomena simulated by the model logic. Consequently, for any fixed set of model input assumptions, a range of resultant values is possible for each cost benefit measurement variable (output).

For clarification, consider that faults to FTFCS components occur within the model as the result of a sampling from specified probability distributions. Total system operating cost, and thus profit, depend on FTFCS component failures. Therefore, in

statistical parlance, total system cost is a random variable since it is a function of FTFCS component failure, which is itself a random variable. This means that total system operating cost for a series of equal time increments (such as a series of yearly observations) will not be equal, even though all input values are initialized to identical values at the start of each simulated year. At issue here is the question of which output value, from the realm of possibilities, to use for defining the response surface which will be optimized. The answer is provided by running the CBDOM a number of times under identical input assumptions and using the sequence of resultant values to estimate the "expected" value of each cost benefit measurement variable; e.g., expected total system operating cost. The estimated "expected" value is computed by means of a statistical average.

The issue of response surface credibility due to the inherent model variability concerns the number of observations that must be taken for each fixed-input scenario to obtain a credible estimate of each cost benefit measurement variable's expected value. The intent of this discussion is not to explore solutions to this question, which is largely influenced by two current unknowns: the cost per computer run and the magnitude of variation in the observed output values. Rather, it is to stress that confidence in a computed optimal solution to the CBDOM is highly dependent on having a credible response surface for the optimizing procedure to explore, albeit discontinuous and nonlinear. Thus, it is important that the simulation represents the real world in sufficient detail to produce confidence in its validity, since the model may subsequently be used for experiments that the real world would be unwilling to perform.

5.4.2 Response Surface Conditioning

The kind of model instability in parametric analyses that might impact the optimization can be illustrated with a simple example. Suppose the model calculates a value for a performance measure $y = f(x)$ for any value x of an input design variable. For example, y could be a cost benefit measure for FTFCS designs and x could be the number of computer memory units used in a design. Further, suppose that the procedure for calculating $y = f(x)$ values incorporates a major branch in the logical pathway through the calculations. An example of this would be the choice of paths in the computational flow of the repair shop model. For each value of x input to the model, the computations proceed to a certain point. At this point, the simulation program logic must decide which of two computational paths it must follow to complete the calculation of f(x). The choice of which paths (A_1 or A_2, for example) to follow may strongly affect the outcome of the simulation and, thus, the calculated f(x) value.

Let the path designation be represented by the logical variable A, which takes on the value A_1 or A_2 depending on the computational path to be followed. Since this choice is a function of the input variable x, A can be represented by a functional relationship $A = g(x)$, where g(x) ranges over the two values A_1 and A_2. The question arises: How systematic is this variation between A_1 and A_2 as x varies over its allowed range of values of, say, 1 to 10? Since g(x) is assumed to have a large effect on f(x) and the overall parametric relationship $y = f(x)$ is to be explored ex post facto by the optimization method, then, hopefully, g(x) varies between its two values in a well-behaved, systematic way.

Suppose Path A_1 tends to produce high f(x) values and Path A_2 tends to produce low f(x) values. A potentially good situation is for the choice $g(x) = A_2$ to occur over some small range of consecutive values of x (say, x = 3, 4, and 5) and for $g(x) = A_1$ to occur for all other values (in this case, x = 1, 2, 6, 7, 8, 9, and 10). This would be ideal (and probably lucky) if the effects of all the other logic in the simulation correlated

ORIGINAL PAGE IS
OF POOR QUALITY

positively with the effect that the g(x) choice had on f(x). In this case, a systematic overall variation is attained, with f(x) varying through uniformly high values for x = 1 and 2, then through high values again for x = 6, 7, 8, 9, and 10. This is illustrated in Figures 16 and 17.

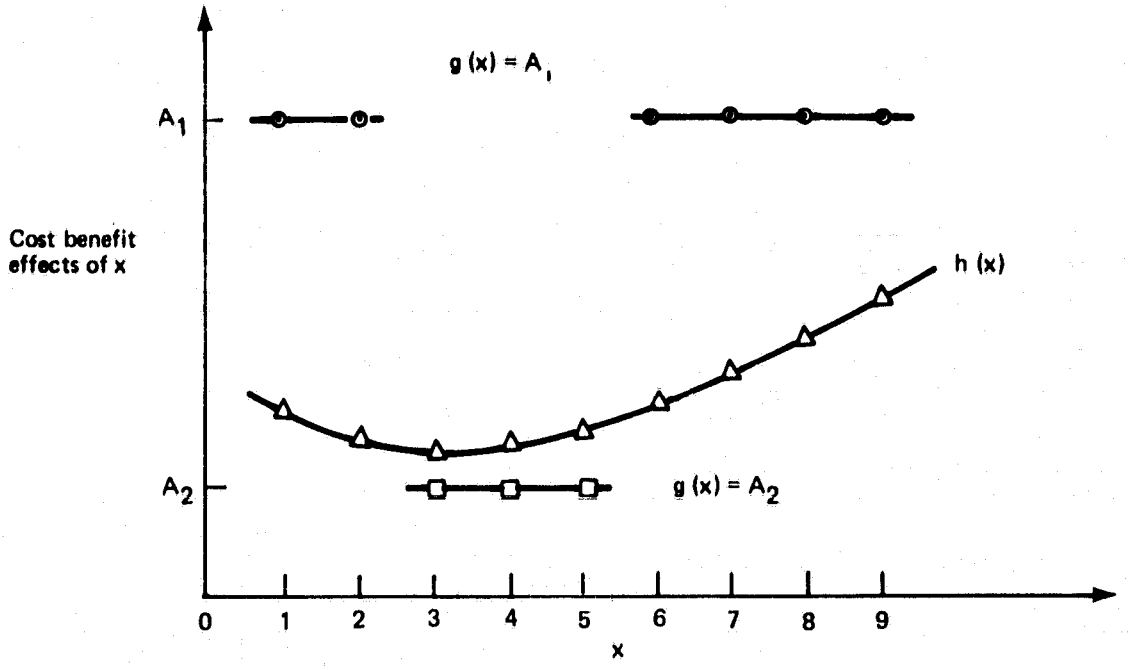

Figure 16. Separate Effects of g (x) and h (x)

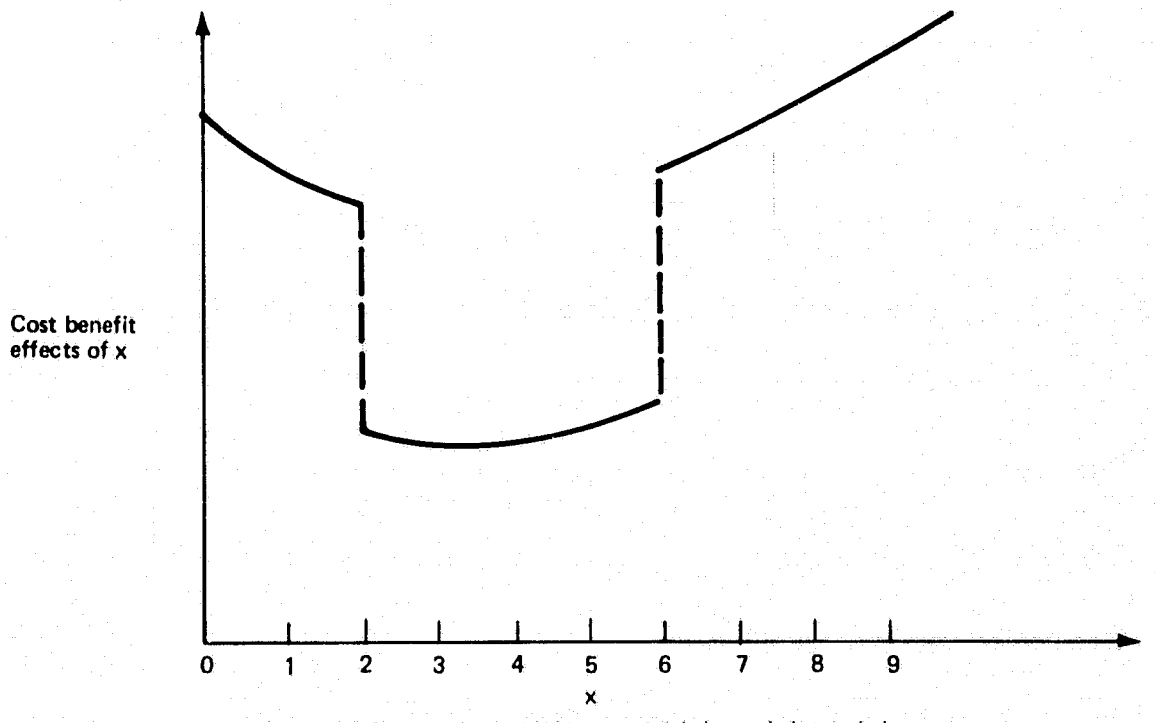

Figure 17. Combined Effects of f (x) = g (x) + h (x)

Figure 16 illustrates the two hypothetical effects mentioned. The g(x) effect on f(x) is represented by two horizontal lines corresponding to the differing magnitudes of f(x) values that the paths A_1 and A_2 tend to produce. The actual dependence relationship of f(x) on A = g(x) will actually be quite complicated, and the figure merely illustrates the overall effect on magnitudes. For example, the horizontal lines could represent the average f(x) value resulting from the corresponding choice. The effect of all other logic paths through computations independent of A are grouped together into the h(x) curve shown. The f(x) value at each x is a function of the g(x) effect together with the h(x) value, and a hypothetical "resultant" curve for y = f(x) is shown in Figure 17. In this example, the g(x) and h(x) effects are positively correlated, and the composite relationship in Figure 17 appears systematic (regardless of the large jumps in f(x)) thanks to the systematic behavior of g(x).

In practice, not one, but several, design variables x_1, x_2, x_3, etc. are to be varied simultaneously in a parametric study that may involve more than one dependent output variable $f_1(x_1, x_2, x_3, \ldots)$, $f_2(x_1, x_2, x_3, \ldots)$, etc. Furthermore, the logic, including Pathways A_1 and A_2, may be rerun many times in a Monte Carlo fashion to produce an expectation value for f(x), and this value is to be optimized. This means that the anticipation of ill effects, such as nonsystematic behavior of an effect like g(x), can, in general, be difficult and may be prohibitive. The point is that these phenomena must be controlled as much as possible during design of the simulation model.

Consideration of the parametric effects during the simulation model design and testing phases will contribute valuable insights to help produce a reliable model. Over-emphasis on isolated design-point simulation objectives can result in a model that contains computational instabilities. Parametrically, these instabilities appear as erratic behavior when input parameters such as x are exercised over some range of values.

The operation of the parameter optimization procedure on the computer is illustrated in Figure 18. The complexity of the simulation logic indicates that a fully automatic optimization may not be possible and is probably not desirable for the envisioned simulator model. Each simulation at a single design point will produce a great deal of information other than the performance function values f(x). Engineering screening analysis of these data may be necessary to judge the quality of the simulation and may be helpful in running the optimization program. For example, it may be desirable to use manual screening to eliminate infeasible or poorly performing designs, thereby perhaps augmenting the optimization method.

The optimization procedure on the computer is illustrated in Figure 18 as an interactive process alternating between the simulation and optimization programs to carry out the iterative optimization toward a solution. The output from each simulation is screened manually, then transmitted to the optimization program via a shared data base. The optimization program then computes a candidate design point to be evaluated by the simulator in the next iteration. With manual screening of the simulator output and interactive transmission of data between the two programs, it may be useful to have the optimization program provide a list of more than one candidate design. The engineering analyst then can select the design most likely to succeed from an engineering standpoint. Thus, the optimization program carries out the routine computations and serves as an aid to economical engineering.

5.4.3 Simplex

The nonlinear simplex minimization method advanced by Spendley et al.[12] and modified by Nelder and Mead[13] is the baseline optimization model for this analysis.

ORIGINAL PAGE IS
OF POOR QUALITY

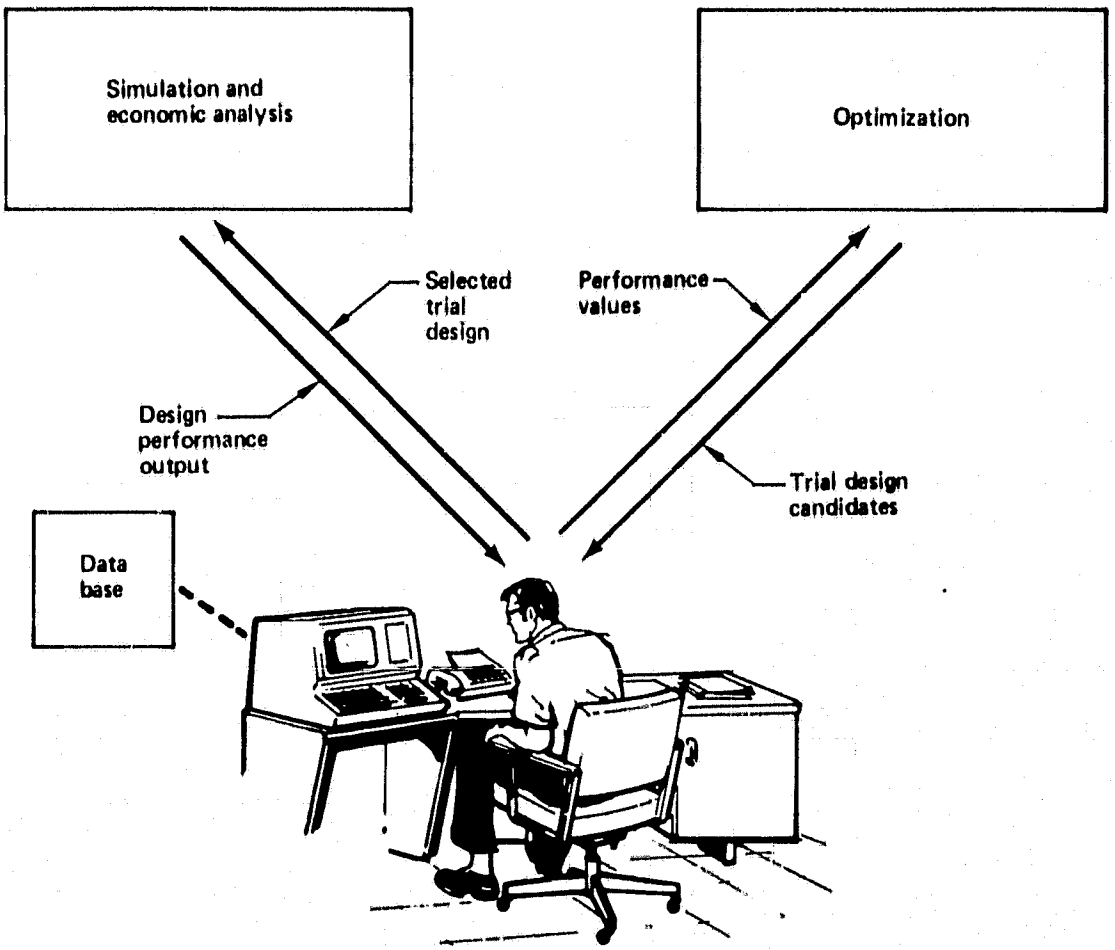

Figure 18. Optimization Procedure

Further investigation will add to this model or replace it if the model structure reveals a better method. Simplex is illustrated by the flow diagram in Figure 19 and the Figure 20 illustration that shows its search pattern options in a configuration space of two dimensions. The method illustrated in these figures is meant for optimization over a configuration space where the independent configuration design variables X can take on real values and are not restricted to integer values. Thus, it will have to be modified somewhat.

A simplex is a polygon having the fewest number n + 1 of vertices in n-dimensional space. In two dimensions, it is a triangle and in three dimensions, it is a tetrahedron. Function values f(X) can be found for each of the n + 1 vertices by evaluating f at each of the corresponding sets of configuration variables. Linear interpolation or extrapolation is a valid procedure in a configuration space region containing the current simplex, because the vertices provide just enough sample points to fit a linear model in the n variables X. The nonlinear simplex method uses what is, perhaps, the safest strategy in difficult minimization problems. This strategy is to reflect a vertex X having the maximum function value f = f(X) through the centroid X of the opposite face of the current simplex. Should the new vertex X*, obtained by reflection, have a lower function value f*, it could be retained to form a new simplex. Thus, an undesirable vertex is discarded and a new simplex is formed by using the other n vertices (which also were used to define the centroid X) together with the new vertex. This is the basic simplex search step.

ORIGINAL PAGE IS
OF POOR QUALITY

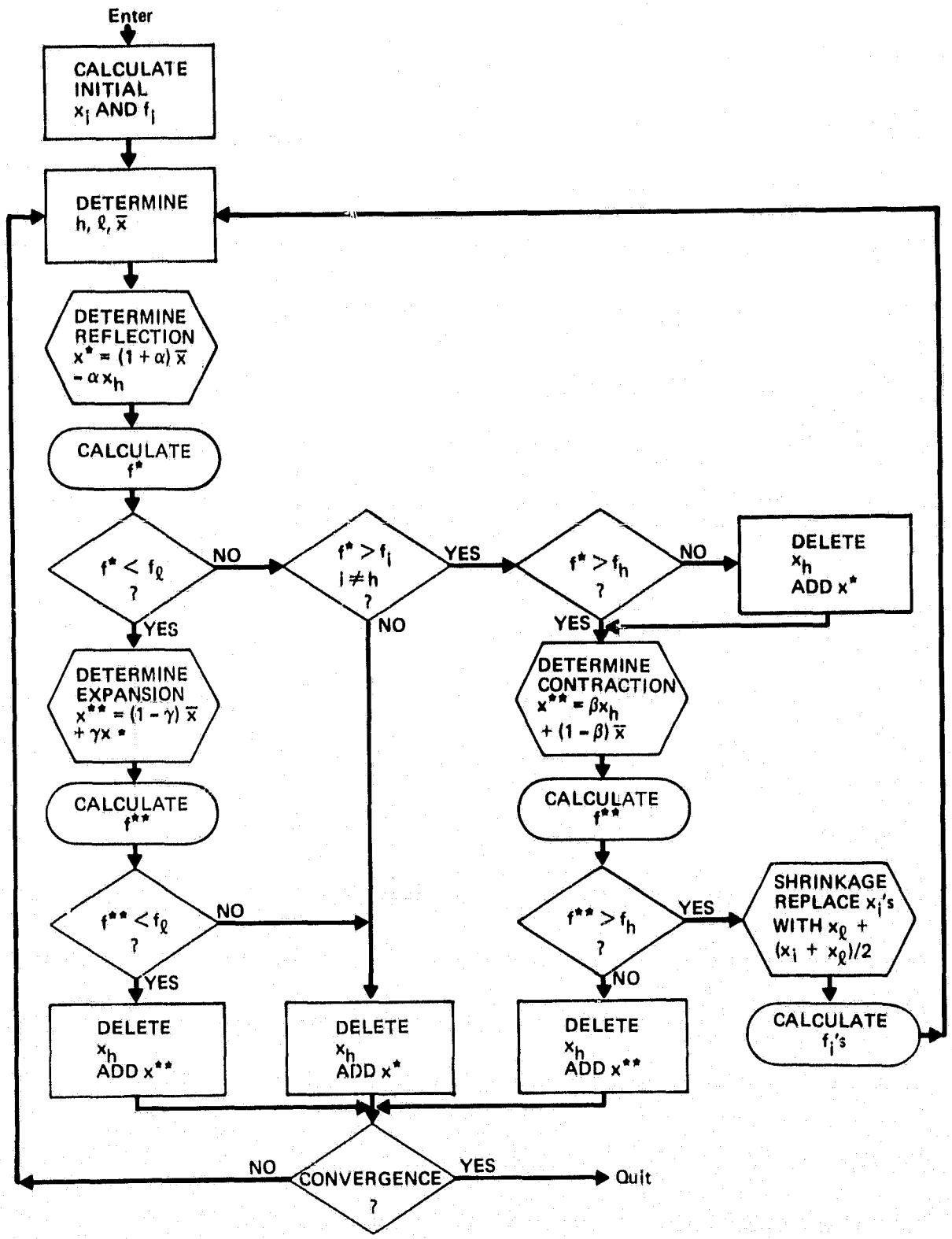

Figure 19. Flow Chart for Nelder and Mead Simplex

ORIGINAL PAGE IS
OF POOR QUALITY

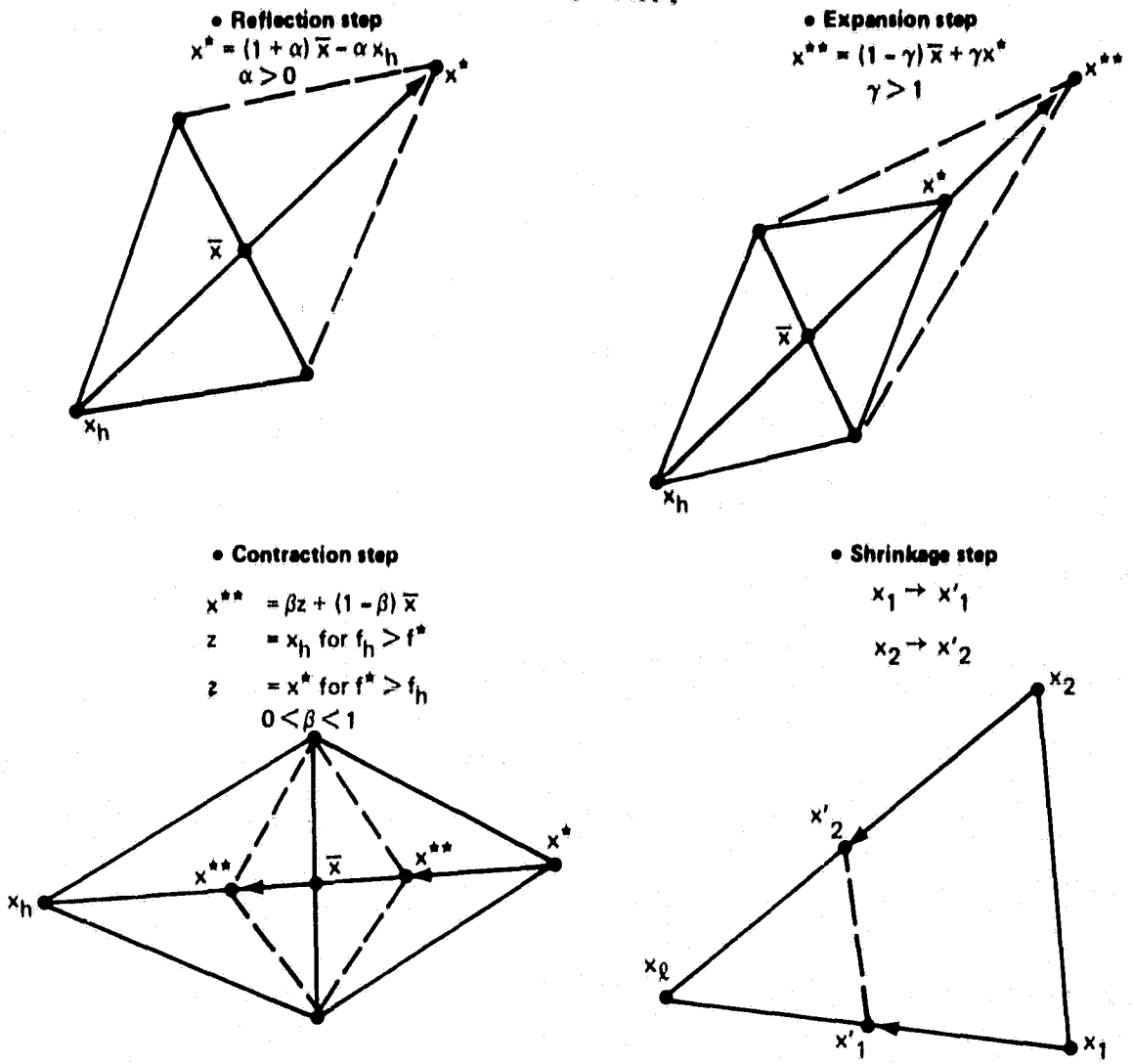

Figure 20. Basic Simplex Operations

The method goes on to the various other options (see fig. 19 and 20)--expansion, contraction, or shrinkage--depending on how the value f* compares with f and the other n f-values. However, the imposition of constraints and the requirement that the search steps use only vertices from the n-dimensional grid where the X variables take on integer values will bring about further modifications.

5.4.4 Application of Simplex

Stability and adaptability are important when selecting a simplex as a baseline optimization method. The simplex is stable in that, to a large degree, it responds well to difficult problems that have badly conditioned variables. It is adaptable in that it responds relatively well to having its basic unconstrained search pattern modified; e.g., to obey constraints on the solution variables. It is felt that this adaptability extends to restricting its search to a grid in configuration space where the configuration variables X_1, X_2, X_3, . . . (e.g., X_1 = number of processors, X_2 = number of memories, X_3 = number of clocks, . . .) can have only non-negative integer values (see fig. 21).

ORIGINAL PAGE IS
OF POOR QUALITY

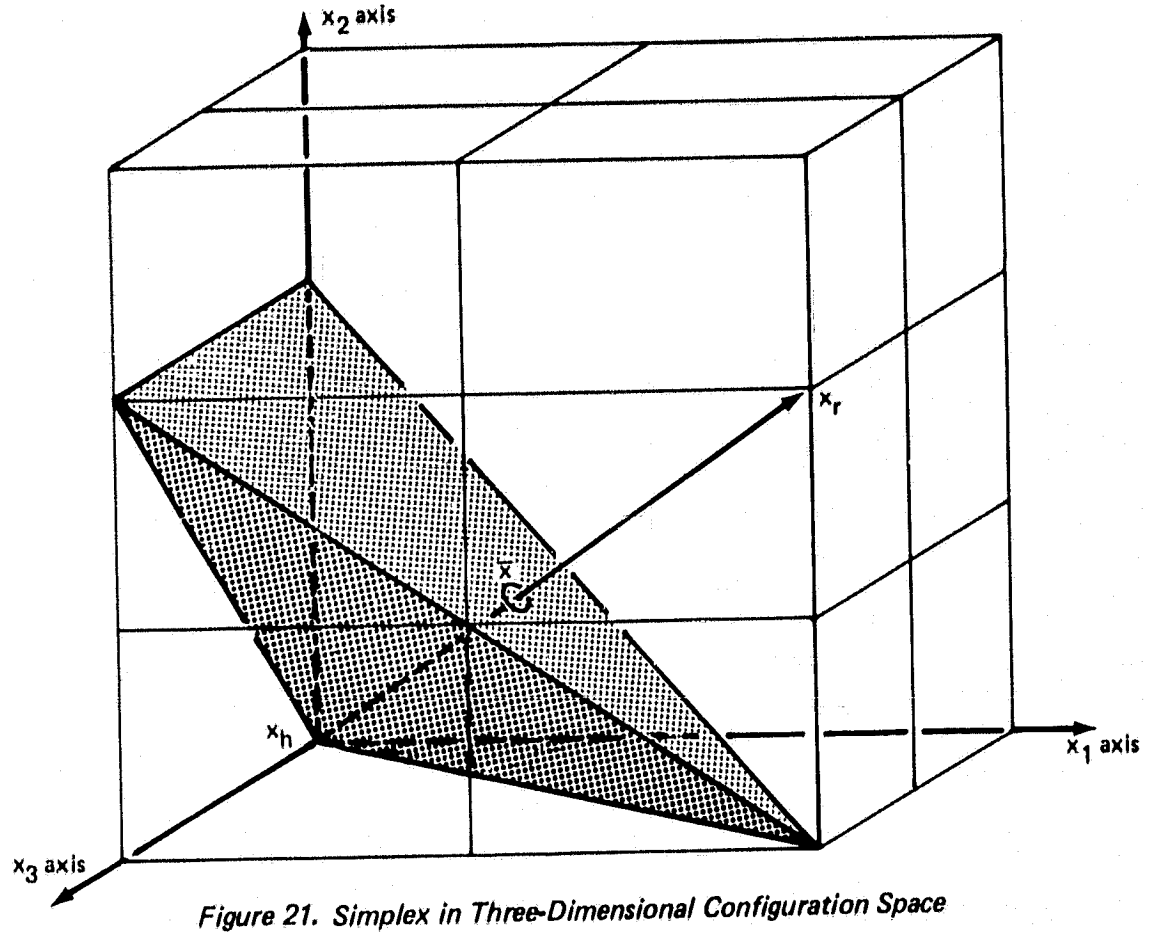

Figure 21. Simplex in Three-Dimensional Configuration Space

Suppose there are n configuration variables X and they each have m possible values. An optimum (minimum, maximum) value for the objective function $f(X_1, X_2, \ldots)$ (for example, f = profit) must be found. Were the search process to be by simple enumeration, all of the m^n conceivable grid points representing combinations of integral X values would have to be searched. Thus, for n = 10 configuration parameters having, for example, m = 4 values each, f would have to be evaluated (i.e., the simulator would have to be rerun) at 4^{10} design points, clearly an astronomical number. If the simplex is at all successful in making progress toward an optimum, it should be possible to make reasonable progress toward an optimum with comparatively few evaluations, hopefully on the order of n^2. If n = 10, this would mean some multiple of 100 evaluations via the simulation program, clearly an improvement over the astronomical 4^{10}.

The important point for an optimization problem like this is that simplex is robust (it will make some progress toward an optimum under a wide range of conditions). This makes it a good choice for problems that may cause most optimization algorithms to fail outright.

There is still one cautionary point: no algorithm exists for finding a global optimum in the general nonlinear optimization problem (except simple enumeration of m^n values

in the grid search mentioned above). Thus, simplex is (like all known iterative methods) really a local search method. Unless the optimization problem is known to be convex, there may well be local optima, and the presence of constraints makes this doubly likely. Again, exploring the problem structure by further analyzing the simulation model may help to guarantee a global optimum. Currently, it is thought possible that local optima will have to be accepted, depending on how much computer run time can be allotted to exploring the possible different local optima in the searach for a global solution.

5.4.5 Sensitivity Analysis

Locating isolated optima may not be as important in FTFCS configuration exploration as determining the overall parametric behavior of cost benefit functions over the space of configuration variables. Simplex has logical extensions to aid in exploring parametric trends around an optimum. For a good discussion of the significance of simplex and the types of analysis it makes possible, see Spendley et al.[12]. The final form of a sensitivity analysis for FTFCS parametric studies will be closely tied to the results of optimization methods development.

6.0 AIRLINE REVIEW

During this study, United and Delta Airlines reviewed the preliminary drafts of the Cost and Benefit Design Optimization Model (CBDOM) requirements and specification and provided a number of comments and suggestions. Most of these comments are now reflected in this document; the comments not incorporated in preceding sections express concerns that are answered below. Airline comments are shown in quotation marks.

6.1 DELTA AIRLINES' REVIEW

The CBDOM concepts were reviewed by four members of Delta's Engineering Performance and Analysis Group, who critiqued the model as follows:

1. "The scope of the economic model, like the cost/benefit optimization model in toto, is ambitious in trying to represent accurately the real world. The economic modeling procedures appear to be both accurate and sufficient. If the underlying assumptions for much of the input were not so subjective by nature, the model could be excellent. However, that subjectiveness and the current lack of documentation for such factors as risk and inflation make the modeling highly susceptible to distortion."

   Answer: It is agreed that factors such as inflation can significantly bias operating costs and affect the optimization results, particularly for design features that can be made either capital- or labor-intensive. None of the econometric models, which might be used as a source for inflation rates, have performed satisfactorily in recent years. For instance, in 1978, Chase[23] predicted a 1979 Comsumer Price Index increase of 6.4 percent, which was in error by a factor of two. About the best that can be done is to use different inflation rate assumptions and use "judgment" to select one of the optimized configurations that result.

2. "Methods of financing do not appear to be relevant to the decision criterion."

   Answer: Different methods of financing affect the tax credits that can be claimed, as well as cash flow timing. Like inflation, they can perturb the optimized design by changing the present equivalent ratio of capital- and labor-dependent cash flows. Apart from their possibly important influence, little additional complexity results from including debt and lease funding as analyst options.

3. "Cancellation penalty should be defined. Substantiation is required for chart showing 'passengers lost through cancellation (Appendix XI)'. A delay would incur definable cost quantities such as additional fuel burn and crew pay time, but these would likely be masked by subjective factors of lost passenger revenue and goodwill. Frankly, obtaining a consensus within a single airline on the appropriate economic penalty would be remote, much less within the industry. Further, there can be a benefit to a flight delay, for whatever reason, which accommodates connecting passengers who might otherwise have missed a flight; if the cost of a delay/cancellation is to be considered by Boeing, then this tradeoff should also be explored."

   Answer: Appendix XI now provides details of the current method of calculating both delay and cancellation costs. An updating of the delay and cancellation cost method has been suggested as a Phase II project (sec. 7.4) and would include an assessment of passengers gained as well as lost.

4. "CAB cost reporting criteria should be the baseline with capability for the user to modify the input quickly and easily to reflect its own operation, as for aircraft life, residual value."

   Answer: CAB Form 41 cost entities are not conveniently defined for design optimization purposes. For instance, delay costs, as defined in this document, consist of costs that would be reported in several CAB Form 41 accounts. Spares holding cost, which is important for design optimization, is lost in CAB accounts for Burden. It would be possible, for airline convenience, to reformat cost entities in the CBDOM to look more like CAB Form 41 entities, and such a task could be reconsidered for Phase III work.

6.2 UNITED AIRLINES' REVIEW

The United review team consisted of the Director of Maintenance Analysis and representatives of the Controller's Office and Maintenance Engineering. Comments from United not incorporated elsewhere in this document are as follows:

1. "The overall cost analysis shown in Appendix IX is acceptable for illustration purposes only. It has at least two problems that need treatment before such an analysis carries a persuasive impact:

   a. The selling point of the Fault Tolerant project is the rate of return on investment, as covered in Appendix IX. The problem with the exhibited analysis is that it is a fractional approach. Our experience is that when only a part of a program is considered it is difficult to keep costs and savings synchronized. Also, frequently savings in one part may accompany added costs in another. The acknowledgement of this fact is made in the comments of Appendix IX, and perhaps the final package will be acceptable. However, to emphasize our point, when benefits or costs are being used relating to Fuel/Weight ratios, Delay/Cancellations, airplane insurance, and these factors are the principal areas of economic value, one is always suspicious as to whether he would agree with the method of apportioning the costs and savings. We would certainly want to see a total analysis."

      Answer: Appendix IX was intended as an example of the type of economic analysis intended for the CBDOM and contains many approximations and assumptions that will be eliminated by the CBDOM simulation. Concern over cost estimating relationships, also expressed by Delta Airlines in Sections 6.1, items 1 and 3, should be alleviated by the work proposed in Section 7.4 for delays and cancellations. Developing cost-estimating relationships for fuel burned is a simple task by comparison with that for delays. Errors incurred by using fuel costs from Table 8 might be eliminated by more detailed methods of performance analysis, possibly in the proposed Phase III of this study.

   b. "Frequently when basic changes in unit reliability are made the removal rate undergoes a change, but not as great as was anticipated . . ..I would like to see some test cases performed before a commitment is made to accept results of this model."

      Answer: Considerable emphasis will be placed upon model validation in the Phase II study. Economic sensitivity to errors in reliability prediction also will be possible (sec. 5.3.6).

2. "The use of 'present equivalent value' as the basis for economic comparison alternatives is a valid procedure and should give adequate results in this particular model. The various parameters of the economic evaluation program used in the model are comprehensive and reasonable, as far as we can determine. Overhead costs and the application of overhead rates to direct labor dollars are acceptable to United. However, the use of a standard 25 percent inventory carrying cost would not be acceptable to United for other than as illustration of method—as in the model description."

   Answer: The spares holding cost detailed in Section 5.3.3 under SH was based upon a survey of domestic airlines made by the Contractor in 1975, for which all responses except one were in the range of 22 to 25 percent. Confirmation of this result could be considered as a Phase II or III task of this study.

3. "This is an ambitious project, considering the level of detail that will be modeled. Hopefully the cost of computer run time can be held to a level that would permit use of the model by the airlines. If the program is to be transportable to airline, airframe, avionic manufacturers, exotic extensions to FORTRAN should be avoided."

   Answer: The economic analysis routine and optimization routine are modifications of existing FORTRAN programs. However, development of an operations and maintenance simulation with adequate detail would be an almost impossible task in FORTRAN. SIMSCRIPT, the language chosen for the simulation, permits structured, well documented programs to be written. In addition, it has been the intent to specify a simulation model that can be tailored to most airline environments without programming changes.

7.0 PHASE II

7.1 PHASE II OBJECTIVES

The requested objectives for Phase II were as follows:

> "This phase will refine the model requirements and specifications to reflect current knowledge and experience. Data required, but not available, will be collected. A computer program implementing the model specifications will be generated and validated using information on current conventional flight control systems in accordance with Exhibit B. (Exhibit B is Langley Research Center's Computer Programming and Documentation Specification, October 7, 1976.) These and perhaps additional computer runs will be structured to provide a preliminary sensitivity analysis."

The work performed during Phase I of this study does not indicate any change to the objectives of Phase II, except that Exhibit B calls for the use of FORTRAN. The programming effort will be substantially reduced by using SIMSCRIPT (which is also available to NASA Langley). SIMSCRIPT is, therefore, the recommended programming language for Phase II.

7.2 PHASE II, FTFCS OPERATION AND MAINTENANCE SIMULATION

The primary concern for Phase II is the unknown cost of running a computer simulation of fault-tolerant flight control system (FTFCS) operation and maintenance. While the SIMSCRIPT simulations produced in Phase I were inexpensive in terms of computer time, this may not be the case for the comprehensive Phase II simulation that is initially required for validation. A secondary concern is the impossibility of optimizing FTFCS packaging without applying constraints to the possible packaging combinations. This secondary concern also arises from the cost of repeatedly running the computer simulation for FTFCS packaging alternatives.

With these two concerns in mind, the first task for Phase II is to program and validate the O&M simulation so that its running cost can be established. Sections 7.2.1, 7.2.2, 7.2.3, and 7.2.4 provide details of the proposed work.

7.2.1 Computer System Design (Simulation and Economic Analysis)

- Develop system data flow diagrams for the new and existing computer programs required for the model.
- Produce program structure definitions and hierarchical input, process, and output charts.
- Develop a model test plan.

7.2.2 Computer Program Design

- Produce a data dictionary and program psuedocode for new and changed programs.
- Design input and output formats.
- Define the range of variables and program diagnostics.

- Code and document the program.

- Develop a test data stream for model testing.

7.2.3 Program Testing

- Exercise each module of the model over the range of each variable and compare the result with the expected output.

- Check the sequencing, control, and data transfer to and from each module of the model and trace events and processes in the simulation.

7.2.4 First Model Validation

- Using data collected on contracts NAS1-15588[24] and -13654[25], show that the model produces dispatch reliability, investment, and operating costs that agree with one airline's B747 actuals. Validation inputs shall consist of route structure, itinerary, fleet size, and resource quantities such as mechanics, test equipment, and spares.

- Analyze discrepancies and modify the requirements, specification, and program as necessary.

7.3 OPTIMIZATION

The nonlinear simplex method developed by Nelder and Mead[12] will be the baseline method for optimization. A FORTRAN program already exists for Nelder and Mead optimization. However, the optimization of such FTFCS features as packaging may well require development of a method of imposing constraints to reduce the number of configurations that require evaluation (and simulation). In addition, the very discrete nature of variables, such as quantity of test equipment, entails the use of integer value vertices from a multidimensional grid instead of the continuous variables normally used with the Nelder and Mead method. The proposed Phase II work to develop an optimization routine for the Cost and Benefit Design Optimization Model (CBDOM) that handles integer, constrained problems is provided in Sections 7.3.1 through 7.3.3.

7.3.1 Exploratory Studies

- Examine bounds, range and types of variables, possible constraints, and methods of restructuring the CBDOM to simplify the optimization.

- In parallel with system and computer program design, modify and test the effectiveness of the optimization method using a limited portion of the CBDOM consisting of the repair shop simulation and ACES provisioning routine.

- Investigate and document potential techniques for reducing simulation variance and select an appropriate method for the CBDOM.

- When the CBDOM sensitivity studies have been completed, reassess the effectiveness of the optimization method used and recommend justifiable improvements.

7.3.2 Final Programming

Provide details required for documentation of the finalized design as specified in Sections 7.2.1, 7.2.2, and 7.2.3.

7.3.3 Second Model Validation

Using the validation case(s) from Section 7.2.4, perform an optimization and check the results for validity with airline personnel.

7.4 DATA COLLECTION AND ANALYSIS

Much of the data required for model validation has been collected as part of NASA Contract NAS1-15588[25]. Additional data are required to determine avionic repair shop work load and to obtain a better resolution of the cost of delays and cancellations. It also is possible that additional data might be needed if differences occur during model validation.

7.4.1 Delay and Cancellation Data Collection

- Obtain data on the number of passengers lost or gained as a result of delays and cancellations and determine the correlation with delay length, time of day, type of flight (business or discretionary), station traffic density, and station type (hub, through stop or satellite).

- Determine the extent of the disruption in schedules following a cancellation and method of recovery.

(Depending upon the success of the Phase II model, further work on less tangible aspects of delay and cancellation costs might be accomplished as part of Phase III.)

7.4.2 Repair Shop Data

Obtain avionic and hydraulic repair shop statistics for model validation.

7.4.3 Retirement Costs and Credits

Obtain data on the retirement costs and credits for flight control or other relevant equipment that is surplused as a result of design improvements.

7.5 PRELIMINARY SENSITIVITY STUDY

- Determine the effect on airline profit of independently changing design controllable input parameters using the validation case input data as a baseline.

- Perform a B747 WLA Cost Benefit Analysis and compare these results with previous estimates. Modify the requirements, program, and specification as necessary.

7.6 MODEL IMPLEMENTATION

Install, test and demonstrate the CBDOM program on Langley Research Center's Cyber, CDC-6000 series computers.

8.0 REFERENCES

1. SIFT: Design and Analysis of a Fault-tolerant Computer for Aircraft Control, Wensley, et al. Proceedings of the IEEE, vol. 66, no. 10, October 1978.

2. FTMP: A Highly Reliable Fault-tolerant Multiprocessor for Aircraft, Hopkins, et al. Proceedings of the IEEE, vol. 66, no. 10, October 1978.

3. CARE III Phase I Preliminary Report, NAS1-15072, April 20, 1979.

4. Airborne Advanced Reconfigurable Computer System (ARCS), B. E. Bjurman, et al. NASA CR-145024, August 1976.

5. Criteria for Approval of Category IIIa Landing Weather Minima. FAA Advisory Circular 120-28B, Department of Transportation, December 1, 1977.

6. Criteria for Approving Category I and Category II Minima for FAR 121 Operators. FAA Advisory Circular 120-29, Change 3, December 3, 1974.

7. GOALS, a General Operations and Logistics Simulation, vol. 1, J. H. Keency. Boeing Document D162-10155, December 31, 1969.

8. MOVES, a Marine Operational V/STOL Environment Simulation, W. Henke. ESA-332, Naval Weapons Engineering Support Activity.

9. Preliminary Analysis of Long-Range Aircraft Designs, NASA TM X-73, 131; Nelms, Murphy, Barlow, June 1976.

10. Vehicle Design Evaluation Program, B. H. Oman, NASA CR-145070, January 1977.

11. A Maintenance Model for K-out-of-N Subsystems Aboard a Fleet of Advanced Commercial Aircraft, D. R. Miller. Grant NSG1338 Technical Memorandum TM-66502, November 30, 1977.

12. Sequential Application of Simplex Designs in Optimization and Evolutionary Operation, W. Spendley, G. R. Hext, and F. R. Himsworth. Techometrics, vol. 4, pp 441-461, November 1962.

13. A Simplex Method for Function Minimization. Computer Journal, vol. 7, pp 308-313, Nelder and Mead.

14. Assessment of the Application of Advanced Technologies to Subsonic CTOL Transport Aircraft, NASA CR-112242, April 1973.

15. Official Airline Guides Data Tapes (published twice monthly). Dunn and Bradstreet, 2000 Clearwater Drive, Oakbrook, Illinois 60521.

16. International Airline Crew Scheduling Model, A. P. Zob, AGIFORS Crew Management Symposium, Washington, D.C., April 30, 1979.

17. Spare Parts Kits at Minimum Cost, G. Black, F. Proschan, Tech Memo EDL-M-154, NTIS/AD255316, April 12, 1959.

18. Air Transport Association Inventory Planning Manual (revised June 1, 1976).

19. A Scientific Routine for Stock Control, R. H. Wilson. Harvard Business Review XIII, 1934-1935

20. Civil Aeronautics Board Form 41.

21. Delay and Cancellation Cost Analysis Technique, J. Rose. Boeing Document D6-40895-1 Revision B.

22. Advanced Revision Procedure 76-37, IRS-1690, Internal Revenue Service.

23. Chase Economic Forecast, Chase Economic Associates, Inc., 1978.

24. B-747 Flight Control System Maintenance and Reliability Data Base for Cost Effectiveness Tradeoff Studies, R. H. Edwards. NASA CR-159275, August 1980.

25. Flight Control Electronics Reliability and Maintainability Study, W. W. Dade, et al. NASA CR-145271, December 1977.

APPENDIX I

LETTER-CHECK DEFINITIONS

The description of the work content associated with letter checks has been included to explain the scenario for accomplishing FTFCS maintenance and inspection at opportunities that occur for the rest of the airplane. The checks at which scheduled and unscheduled maintenance may occur are PF, AF, T-check, A-check, B-check, and C-check, and are defined as follows:

PREFLIGHT CHECK (PF)

A preflight check is accomplished by the flight crew prior to departure using a preflight checklist.

AFTER FLIGHT (AF)

Crew debriefing occurs at each station with maintenance resources, immediately after flight, and consists of the administration time for establishing the work to be accomplished on failures that are visible to the crew since the last debriefing.

T-CHECK (TRANSIT)

Transit checks include:

- Nonroutine maintenance, chronic items, deferred work, and special callouts
- Visual check from the ground of the fuselage, empennage, wings, and engines for obvious damage or irregularities
- Check of tire pressure and tire wear if not previously accomplished on the same calendar day
- Check of fire extinguisher discharge discs

A-CHECK

A-checks include all transit checks plus:

- Check oil levels and service if required
- Check brake wear and change if required
- Check oxygen and replenish as necessary
- Check and clean static vents

B-CHECK

A B-check consists of all work accomplished during a T-check and A-check and, in addition, contains the following:

- Check of engine and APU inlets, guide vanes, compressor, chip detectors, tailpipe interior, and thrust reverser. Inspection for cracks, damage or other irregularities
- Check of interior for obvious irregularities
- Check oxygen system
- Detailed check of landing gear and brakes

- Check of interior for obvious irregularities
- Check oxygen system
- Detailed check of landing gear and brakes
- Check emergency lights, pneumatic and fuel shutoff valves
- Check for fuel and oil leaks
- Remove and check filters
- Check INS battery charger
- Check VOR/ILS calibration
- Voice recorder audio check
- Flight recorder tape readout check
- Lubricate controls

Some of the above items are not included in every B-check.

C-CHECK

C-checks provide time in the hangar for accomplishing all types of maintenance. Ten C-checks will encompass every kind of planned, scheduled maintenance.

APPENDIX II

AIRLINE COST ESTIMATION SYSTEM (ACES)

The Airline Cost Estimation System is a system of programs for determining the costs to an airline of owning and operating parts, assemblies, or subsystems on airplanes. It is a tool for designers of airplane equipment to compare the airline life-cycle costs of design alternatives.

The system takes as input:

- Cost and reliability data of parts comprising the design alternatives
- Time frame of the fleet operation
- Airplane and fleet operating characteristics
- Airline operational and economic parameters
- Financial climate during the fleet operating period

Output of the results of a typical analysis is shown in Figures B-1 and B-2.

Figure B-1 is the summary of costs for one design alternative. (The numbers in parentheses refer to the circles in the figures.)

(1) Selected input parameters
(2) Investments (itemized)
(3) Operating costs (itemized)
(4) Retirement costs
(5) Tax adjustments
(6) Total cost of ownership

Figure B-2 shows the results of comparing the costs for nine design alternatives:

(7) Baseline alternative that has the minimum investment
(8) Sum of the present equivalent values of the total yearly costs
(9) Sum of the present equivalent values of the total yearly investments
(10) Extra return on investment (EROI) relative to the baseline alternative
(11) Payback years for alternatives costing less than the baseline

Other outputs of cost results that are not shown in Figures B-1 and B-2 include, for each design alternative, a yearly itemization of:

- Total costs (both tabular and graphical)
- Investments
- Operating costs
- Retirement costs
- Investment tax credits
- Tax allowance for depreciation

Outputs comparing cumulative cash flows and cumulative present equivalent values of total costs of each design alternative with the baseline alternative are available in tabular and graphical forms.

The system programs are designed to be used with the CDC standard operating system, specifically the Network Operating System (NOS). They were developed using the Boeing CDC 6600 and CYBER computers. The programs may be used interactively from remote keyboard terminals.

ORIGINAL PAGE IS
OF POOR QUALITY

Input data may be assembled by the user on forms provided. Output is printed at the user's terminal immediately after input is completed.

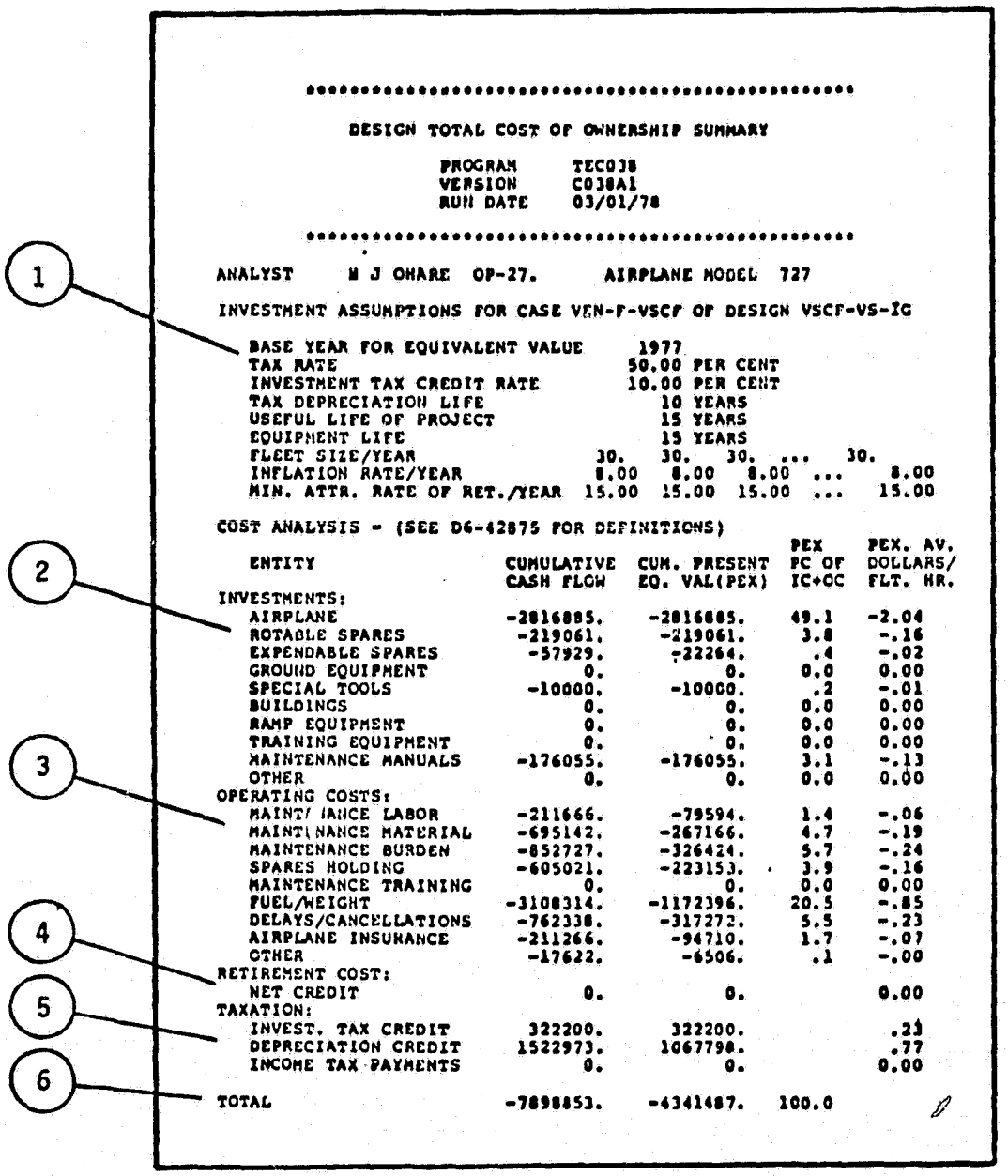

```
*****************************************************

        DESIGN TOTAL COST OF OWNERSHIP SUMMARY

                PROGRAM      TEC038
                VERSION      C038A1
                RUN DATE     03/01/78

*****************************************************

ANALYST     H J OHARE  OP-27.      AIRPLANE MODEL  727

INVESTMENT ASSUMPTIONS FOR CASE VEN-F-VSCF OF DESIGN VSCF-VS-IG

   BASE YEAR FOR EQUIVALENT VALUE      1977
   TAX RATE                           50.00 PER CENT
   INVESTMENT TAX CREDIT RATE         10.00 PER CENT
   TAX DEPRECIATION LIFE                 10 YEARS
   USEFUL LIFE OF PROJECT                15 YEARS
   EQUIPMENT LIFE                        15 YEARS
   FLEET SIZE/YEAR                 30.   30.   30.  ...   30.
   INFLATION RATE/YEAR             8.00  8.00  8.00  ...   8.00
   MIN. ATTR. RATE OF RET./YEAR   15.00 15.00 15.00  ...  15.00

COST ANALYSIS - (SEE D6-42875 FOR DEFINITIONS)
                                                        PEX    PEX. AV.
   ENTITY                   CUMULATIVE  CUM. PRESENT  PC OF  DOLLARS/
                            CASH FLOW   EQ. VAL(PEX)  IC+OC  FLT. HR.
INVESTMENTS:
   AIRPLANE                 -2816885.   -2816885.     49.1   -2.04
   ROTABLE SPARES            -219061.    -219061.      3.8    -.16
   EXPENDABLE SPARES          -57929.     -22264.       .4    -.02
   GROUND EQUIPMENT                0.          0.      0.0    0.00
   SPECIAL TOOLS              -10000.     -10000.       .2    -.01
   BUILDINGS                       0.          0.      0.0    0.00
   RAMP EQUIPMENT                  0.          0.      0.0    0.00
   TRAINING EQUIPMENT              0.          0.      0.0    0.00
   MAINTENANCE MANUALS       -176055.    -176055.      3.1    -.13
   OTHER                           0.          0.      0.0    0.00
OPERATING COSTS:
   MAINTENANCE LABOR         -211666.     -79594.      1.4    -.06
   MAINTENANCE MATERIAL      -695142.    -267166.      4.7    -.19
   MAINTENANCE BURDEN        -852727.    -326424.      5.7    -.24
   SPARES HOLDING            -605021.    -223153.      3.9    -.16
   MAINTENANCE TRAINING            0.          0.      0.0    0.00
   FUEL/WEIGHT               -3108314.   -1172396.     20.5    -.85
   DELAYS/CANCELLATIONS      -762338.    -317272.      5.5    -.23
   AIRPLANE INSURANCE        -211266.     -94710.      1.7    -.07
   OTHER                      -17622.      -6506.       .1    -.00
RETIREMENT COST:
   NET CREDIT                      0.          0.             0.00
TAXATION:
   INVEST. TAX CREDIT         322200.     322200.              .23
   DEPRECIATION CREDIT       1522973.    1067798.              .77
   INCOME TAX PAYMENTS             0.          0.             0.00

TOTAL                        -7898853.   -4341487.    100.0
```

1

2

3

4

5

6

The table output provides details of actual cash and present equivalent value (PEX) of cash for various cost entities

Figure B-1 Example of Airline Cost Estimation System Output

ORIGINAL PAGE IS
OF POOR QUALITY

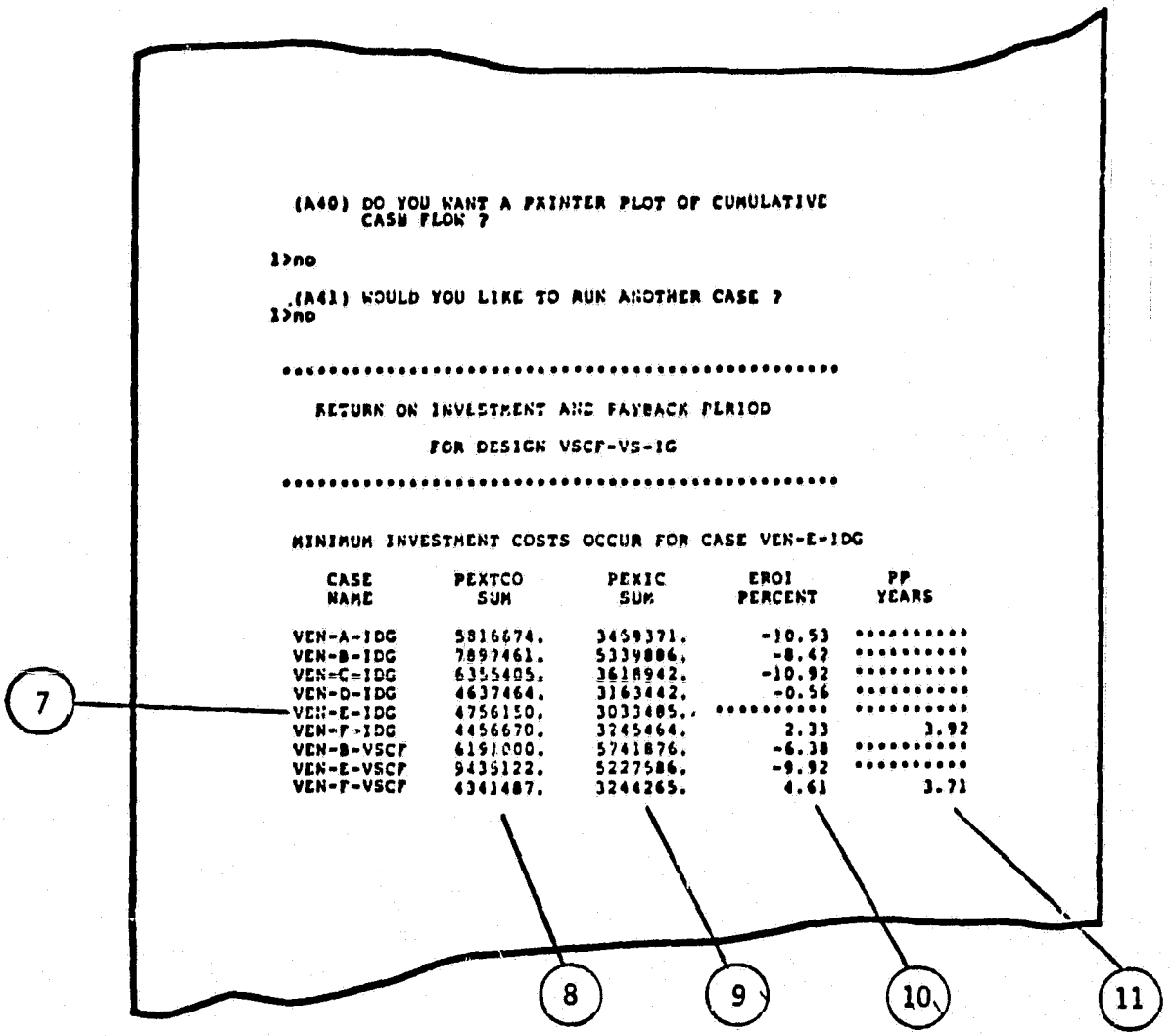

(A40) DO YOU WANT A PRINTER PLOT OF CUMULATIVE CASH FLOW ?

1>no

(A41) WOULD YOU LIKE TO RUN ANOTHER CASE ?

1>no

****

RETURN ON INVESTMENT AND PAYBACK PERIOD

FOR DESIGN VSCF-VS-IG

****

MINIMUM INVESTMENT COSTS OCCUR FOR CASE VEN-E-IDG

CASE NAME	PEXTCO SUM	PEXIC SUM	EROI PERCENT	PP YEARS
VEN-A-IDG	5816674.	3459371.	-10.53	**********
VEN-B-IDG	7897461.	5339886.	-8.42	**********
VEN-C-IDG	6355405.	3618942.	-10.92	**********
VEN-D-IDG	4637464.	3163442.	-0.56	**********
VEN-E-IDG	4756150.	3033485.	**********	**********
VEN-F-IDG	4456670.	3245464.	2.33	3.92
VEN-B-VSCF	6191000.	5741876.	-6.38	**********
VEN-E-VSCF	9435122.	5227586.	-9.92	**********
VEN-F-VSCF	4341487.	3244265.	4.61	3.71

7 8 9 10 11

This example shows a cost of ownership comparison of a number of design alternatives for an electrical power generation system. Each case is compared to the case with the least investment cost and a percent equivalent return on investment (EROI) is calculated as an increment above or below a 15% minimum attractive rate of return (MARR).

Figure B-2 Example of Airline Cost Estimation System Output

Two of the system programs may be executed alone.

The Spares Provisioning Program yields costs and quantities of economically repairable spare parts and the probability of no stock-out during fleet operation.

The Delays and Cancellations Program computes the cost elements associated with schedule interruptions caused by the parts comprising a design option.

The User's Guide for the system contains instructions, input forms, examples, a sample run, and two complete airplane lists of economically repairable spares including cost and reliability data.

ORIGINAL PAGE IS
OF POOR QUALITY

APPENDIX III

AIRLINE OPERATIONS AND MAINTENANCE MODEL AS3031

PROGRAM DESCRIPTION

The Airline Operations and Maintenance Model has been developed and successfully applied to several airlines for evaluating the effect of new or modified operational and/or maintenance concepts and/or equipment on the overall performance of the airline systems. The model simulates in detail the movements of up to three types of airplanes, as constrained by system geography, flight schedules, and operational and maintenance policies. The model can be readily modified to closely simulate many different airline systems. During a simulation run, the model generates statistical distributions on pertinent parameters such as service delay times at system stations, flight times between stations, and malfunction types. For each airplane type, the model is given the system failure rates, standard cumulative flight times between A, B, C, and D routine maintenance, personnel requirements for routine maintenance and for each subsystem malfunction repair, and mean repair times for each subsystem. To assure a close approach to reality, each simulation run is made for a simulated time period of 1, 2, or more years. System sensitivity to changes in operational and/or maintenance variables can be evaluated by a series of parametric simulation runs. For a given fleet, flight schedule configuration, and operational and maintenance policy, the model produces simulation results indicating airline operational performance in terms of:

- Mean flight departure delay times and distributions of delay times
- Airplane substitutions for scheduled flights
- Flight cancellations
- Airplane utilizations
- Maintenance personnel at each system station
- Maintenance equipment at each system station

PROGRAM APPLICATIONS

The Airline Operations and Maintenance Model can be exercised in numerous ways to evaluate the impact of different levels of system reliability and maintainability under existing or proposed configurations of equipment, personnel, and policy. Basic model applications include the evaluation of:

- Flight schedules
- Maintenance policy
- Maintenance logistics
- Airline route analysis
- Airplane type comparisons

ROUTE/SCHEDULE STRUCTURES

Alternative flight routes and schedules may be evaluated for the impact they have on dispatch reliability, flight deviations, airplane utilization, and maintenance personnel and equipment utilization.

MAINTENANCE POLICY

Scheduled maintenance policy, as embodied in the definition of tasks to be accomplished during routine A, B, C, or D checks of airplanes in the fleet, can have a significant effect on overall system reliability, maintainability, and profitability. Variations in

the task splits among the A, B, C, and D checks, or in the operational time periods between routine checks, can be tested in the model for impact on dispatch reliability.

AIRLINE ROUTE ANALYSIS

New routes, new schedules, additional airplanes, and additional maintenance personnel and equipment can be integrated into the model to evaluate the impact on airplane utilization, availability, and maintenance resources. A series of simulation runs could supply information relating to optimal additional airplanes, maintenance personnel and equipment required, together with improved flight schedules for the expanded system.

AIRPLANE TYPE COMPARISON

Comparison of the system-wide effectiveness of two or three different types of airplanes can be accomplished with the model. Two different airplane types, or a new third type with two existing types, can be "flown" over the same route structure with the same operational and maintenance policies to determine impact on airplane utilization. The model effectively keeps separate statistics for each airplane type.

MODEL INPUT, LOGIC, AND OUTPUT

The model contains a preprocessor to allow for easy input of all data related to the airline operations. The model also is constructed in modular form to make modification of a given airline system easier. The modules are:

- Airplane creation
- Flight dispatching
- Flight scheduling
- Airplane operations
- Scheduled/routine maintenance
- Unscheduled/nonroutine maintenance

Model logic is illustrated in flowchart form in Figures A3-1, A3-2, and A3-3.

SCHEDULED MAINTENANCE

If the airplane is not at the station where its next scheduled flight is to originate, nondeferrable malfunctions are processed and the airplane is deadheaded to the next flight origin, where routine maintenance, if necessary, is accomplished. If the airplane entering scheduled maintenance is at its next flight origin, routine maintenance work, if required at this time, is accomplished. At the same time, all nondeferrable, and "checks" malfunctions are processed as unscheduled maintenance. When all maintenance work is complete, the airplane is placed in immediate available status at the station.

UNSCHEDULED MAINTENANCE

Malfunction transactions entering this module are assigned to a subsystem that failed, based upon the class of malfunction and the airplane type. Engine failures at a line station with no engine replacement capabilities trigger the criterion for a ferry flight and are not processed. Normally, engine failures and other malfunctions are processed concurrently, unless maintenance personnel are in short supply at the time. Queueing statistics indicate such bottleneck areas. As all malfunctions from an airplane enter the module, the estimated longest repair time for any one malfunction is used to update the airplane availability time. After all malfunctions have been processed, the actual completion time is used to update airplane availability time. The ATA number of the malfunction requiring the longest work time is saved for the report (if it delays

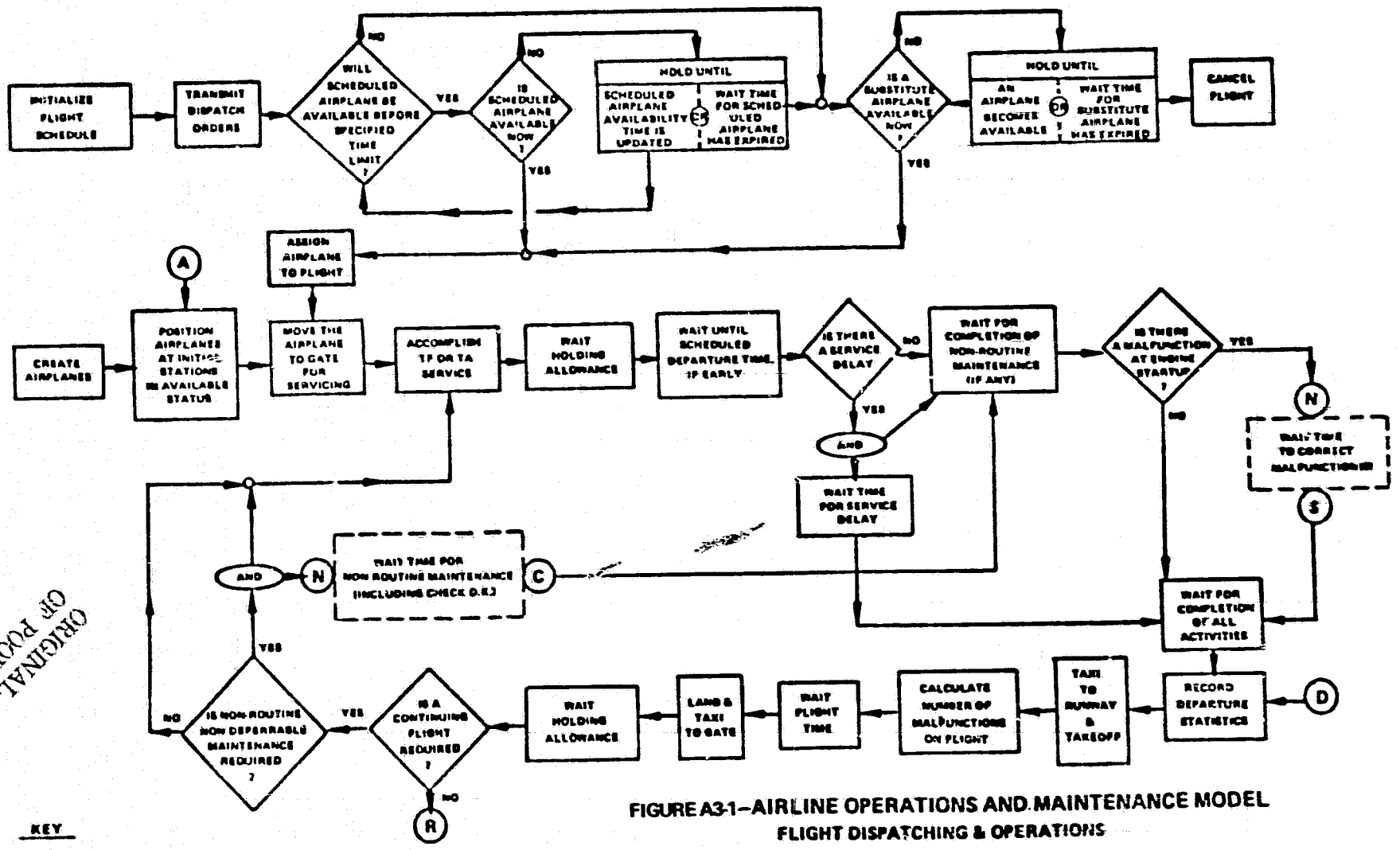

FIGURE A3-1–AIRLINE OPERATIONS AND MAINTENANCE MODEL
FLIGHT DISPATCHING & OPERATIONS

ORIGINAL PAGE IS OF POOR QUALITY

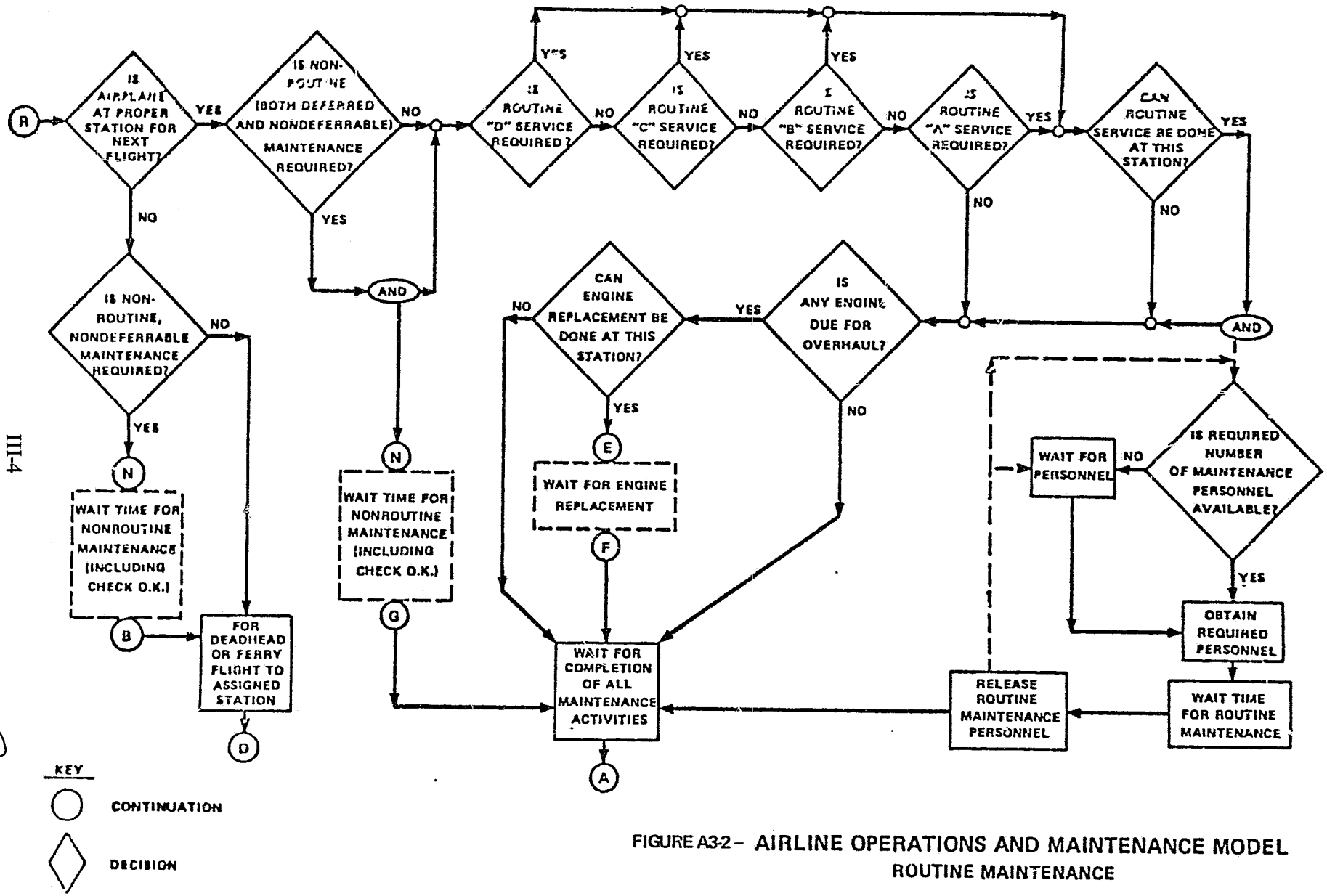

FIGURE A3-2 – AIRLINE OPERATIONS AND MAINTENANCE MODEL
ROUTINE MAINTENANCE

ORIGINAL PAGE IS
OF POOR QUALITY

C-2

ORIGINAL PAGE IS
OF POOR QUALITY

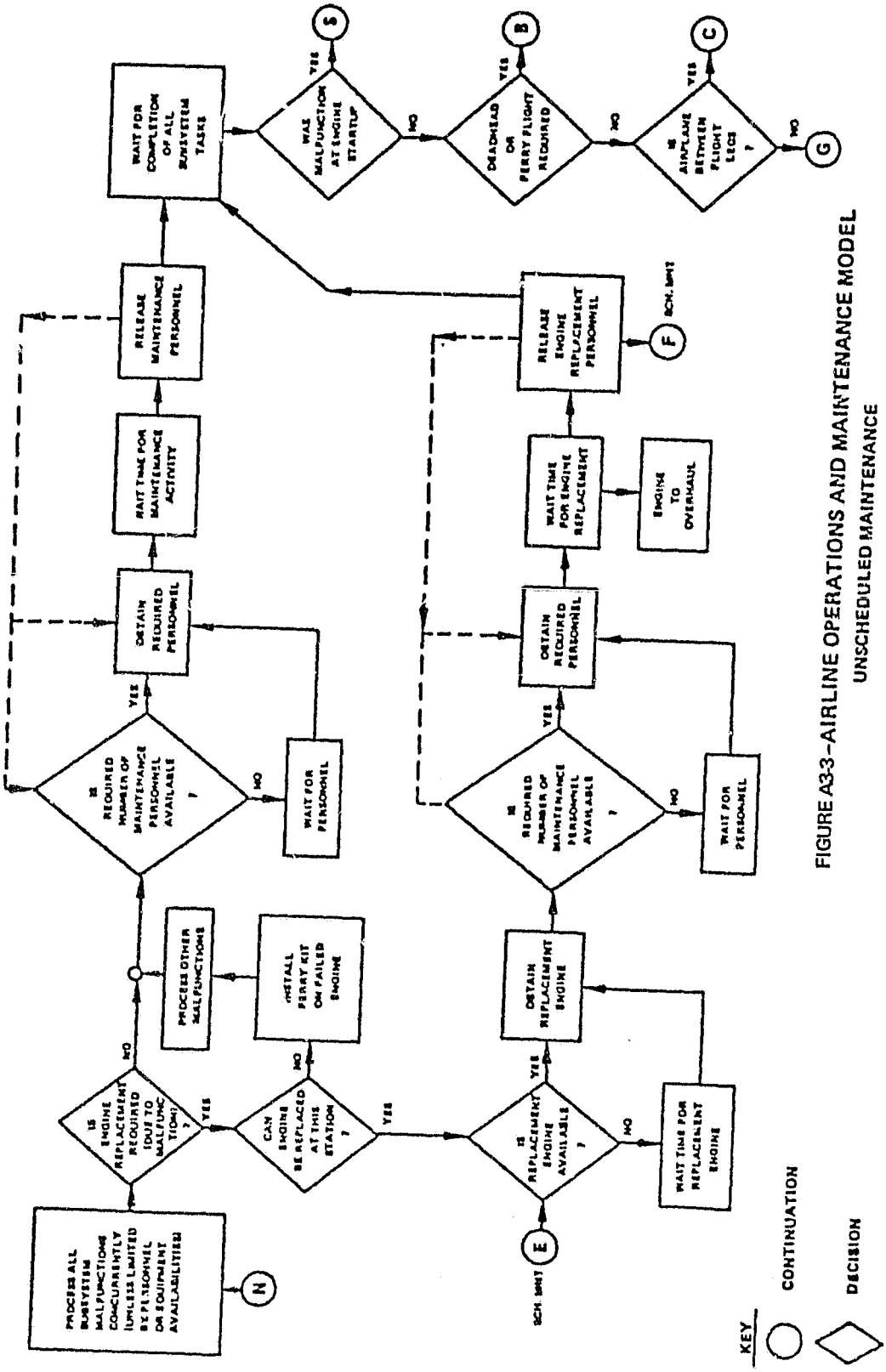

FIGURE A3-3–AIRLINE OPERATIONS AND MAINTENANCE MODEL
UNSCHEDULED MAINTENANCE

the next flight). If an engine is replaced, the failed engine is overhauled and the overhauled engine is returned to storage at the station.

VERIFICATION OF RESULTS

The model is verified for a given airline system by simulation of, and comparison to, actual airline operations. The collection of data on the system equipment and geography, system maintenance, and system operations required for such a verification run and subsequent experiments is facilitated by the structure of the model data matrices. The initial verification run detects possible errors in the original data roundup. Subsequent runs can test sensitivity of the system to changes in critical operational or maintenance parameters for comparison with actual system sensitivity data. Successful completion of the verification runs provides assurance that subsequent studies conducted with the model will be statistically significant.

APPENDIX IV

AN EVALUATION OF THE MILLER MODEL

The mathematical technique for evaluating the economic impact of new fault tolerant flight control designs developed by D. R. Miller in Ref. 1 has been reviewed. Although this review has indicated that definite conclusions of merit are premature, the modeling concepts in Miller's document appear potentially useful in several contexts and from several points of view.

An evaluation of the quality of the Miller model is inhibited by the fact that, as the author suggests, it is only the initial result of a piece of ongoing research. Miller's method is presented in terms of two approximations that bound the solution to a mathematical abstraction of the real avionics system problem. To ask the question then, if this approach is valid and useful is to question first of all if the approximations are valid (i.e. sufficiently accurate) in light of the abstraction and secondly whether the abstraction represents the essence of the true problem.

No mathematical criteria now exist for evaluating the quality of Miller's approximations nor are such criteria likely. This makes the simulation of the mathematical abstraction now being conducted at NASA-LaRC particularly valuable. The second question is even more difficult to assess quantitatively unless the results of the LaRC simulation can be compared with the simulation of a higher level abstraction more closely representing the real world. Since defining this higher level abstraction is part of the problem of Phase 1 of this research with simulations to follow in Phase 2, it is somewhat early to anticipate quantitative evaluation of the merits of the Miller model. With this in mind then, the discussion that follows is primarily expository rather than a detailed review of merit or critique.

The two constraining variables influencing the use of the Miller model are accuracy and size where accuracy must be discussed both in terms of the accuracy of the approximation and the extent to which the abstract model represents the essential features of the avionics system under consideration.

Early results of the LaRC simulation of the Miller abstraction summarized in Ref. 2 seem to indicate that Miller's lower bound is a good measure of central tendency with regard to the number of groundings per day. At 50, the percentile rank of the approximation averaged over the 24 cases considered in Ref. 2 indicates a close approximation to both the mean and median number of groundings. With regard to incurred costs, the average percentile position of the approximation is 43, indicating that it is a less effective estimator of central tendency in this case but still a lower bound. The simulation also proves that Miller's upper bound is too high to be an effective measure for the cases considered.

With respect to judging for accuracy or validity of an abstraction, any model of a real world system must be a compromise between model integrity and mathematical tractability. This rule of thumb is unusually true in the present context in that the real world problem is very complex. Briefly, the real system problem includes the interactive effects of a large flight network with a diversified fleet, a detailed maintenance structure, and a complex, flight critical hardware system operating in a wide time frame that varies from mission lengths in the large to maintenance actions in the small. The compromise inherent in the Miller model seems highly effective. It appears to emphasize all of the important structural elements of the problem without sacrificing the intent of a mathematical solution. Structural differences between model and reality can be argued but numerical evaluation of these differences must wait until experience on the model's use and scope is available through simulation. Since, however, the current detailed study is based on these structural differences, a brief discussion of some of them is perhaps useful.

It is difficult to argue that the Miller model does not include certain effects on variables thought to have influence on the answer. Indeed, he has been extremely successful in including some measure of most effects. Rather it is the total impact of large numbers of second order effects that will cause differences, if any, between Miller's and some higher order real world model. Some of these second order effects thought to have some economic impact are:

a highly interactive airline network sharing a fleet of airplanes of different types and functions rather than a single route of one airplane type;

a highly fluid maintenance operation capability that depends on many cost variables as well as demand, rather than a highly stylized main maintenance base, three activity level, maintenance concept;

the fault detection capability of the system including the avionics capability as well as ground based detection and the impact of "false alarms";

"start-up" time effects and the effects of latent errors, which may cause differences from the assumptions on which Miller's steady state extrapolations are based;

software repair and maintenance;

the "other carrier" impact coming through shared spares pools;

more complicated responses to emergency demand such as the possibility of borrowing from nearby aircraft, restocking other stages at the same time, etc.;

broader avionics structural definitions than k-out-of-n decoupled stages in series;

stricter and more extensive cost accounting, less cost averaging;

more complicated interaction between demand and spares pools levels.

The impact of the size constraint is more difficult to determine. Experience in the past suggests that a straightforward state count that yields astronomical levels even for such simple systems as the example described in Miller's paper,

is not always a valid measure. In a practical situation with real constraints, the state count is often far less than a simple count of all combinations of working and failed equipment levels. Miller suggests that it may be possible to utilize sparse matrix techniques in coding to increase the speed of computation. Experience too, shows that real gains can be made utilizing these ideas. If the problem is too large to be coped with efficiently by any of these means, and size must be faced, the model could be used iteratively by varying the number of aircraft in the fleet and spares in the pool, sequentially. These sequential solutions might then suggest numerical relationships that could be used to forecast the behavior of a larger system whose state count is beyond the feasible range.

The accuracy of the lower bound approximation for the Miller model indicates that it could be useful in providing a first look at determining the size and cost of new systems if the state count constraint proves surmountable. Although a lower bound is not as useful in determing costs as an upper bound, its potential for approximating system performance should not be overlooked.

There are several other possible uses for the Miller model other than this strictly global role in assessing new systems. Some of these have already been suggested in Ref. 2. Perhaps the most important contribution of the simulation to date is in demonstrating that a simulation of the cost impact of fault tolerant avionics systems is feasible with respect to cost, computer requirements and the usefulness of the answers it produces. An interesting second result of this simulation is that the random cost estimates across the replications at steady state have shown fairly pronounced variability. The ramifications of this information on the current study are twofold. At the very least it indicates that time probes should be placed across the replications at regular intervals prior to steady state, to determine if this variability is indeed still present in the larger simulation, and, if so, the nature of its source. Also, it seems possible that this variability

might be due to a drift away from nominal in some series before steady state. If this is the case, a more global measure of system performance might be more realistic to use as an optimization criteria than average cost at steady state.

The simulation optimization currently under consideration may prove costly to run due to its size and complexity. Therefore any a priori information with regard to good operating levels of the variables for a given scenario, or to heuristic relationships between variables, could be an important factor in the speed of convergence of the optimization process. The Miller model could be useful in this capacity. That is, those operating levels and strategies that seem most optimal, i.e. least costly, in the Miller sense, may provide an efficient initial operating level for the larger Phase I problem.

During the course of developing his model, Miller makes several suggestions for approximations to the process that might prove fruitful as partial modeling devices for improving the efficiency of the large simulation. In particular, such ideas as uncoupling the stages, Poisson emergency demand statistically distributed over the route structure, use of steady state distributions for modeling parts of the process and uncoupling portions of the interaction of the demand and repair process could be incorporated into the simulation for efficiency if it could be shown that the displaced detail was unimportant. There appears to be only two methods of providing this proof. One, if possible, is to simulate portions of problem in great detail in order to demonstrate the validity of the approximation and another is to build the greater model, simulate it, and let feedback provide the numerical basis with which to approximate. Neither approach is contemplated for Phase I although both might be necessary if experience with the large simulation dictates improved efficiency.

Miller's model could prove useful in extending short term simulation results to achieve a steady state answer. This will depend of course on the nature of the system's steady state. Since the impact of latent faults will be

evaluated in the more detailed simulation, the cost effective solution might indicate that the system should operate with a gradually increasing failure rate rather than to incorporate very exhaustive testing for latents on a scheduled basis. If it could be shown that constant failure rate is a reasonable assumption, the Miller model might well provide sufficient insights into steady state behavior when based on short term results obtained from the detailed simulation.

Although many questions remain as to the nature of the accuracy of Miller's model, it should be applauded as a careful attempt to develop new methodology in a very difficult problem area where no other methodology now exists. As in any compromise dictated by the requirement of mathematical solvability it can be challenged on the grounds of realism and therefore must be validated. If validated it has the potential of offering a very satisfactory, less costly answer for many problems and might be particularly useful for gaining broad insight into the general operating levels of a particular system. Other than validation the only other constraint possibly inhibiting the usefulness of this technique is the combinatorial growth of state count as the system grows in size and complexity.

Other uses of the Miller concepts have been explored that complement the detailed simulation optimization of the current study. Providing initial conditions to the simulation is one such possibility. Others that seem fruitful include replacing details of the simulation with his analytic models to improve efficiency and extrapolating a short term simulated history to steady state. Assessment must wait until the larger simulation is in production and tradeoffs can be evaluated.

References

1. Miller, Douglas R., A Maintenance Model for K-out-of-N Subsystems Aboard a Fleet of Advanced Commercial Aircraft. Technical Memorandum Serial TM-66502, The George Washington University, Nov. 1977.

2. Miller, Douglas R., Further Results for a Maintenance Model for K-out-of-N Subsystems Aboard a Fleet of Advanced Commercial Aircraft. Technical Memorandum Serial TM-66545, The George Washington University, Sept. 1978.

APPENDIX V

RELIABILITY CONSIDERATIONS

In surveying available reliability assessment packages for analyzing digital fault-tolerant avionics it becomes apparent that their evolution tracks the evolution of the fault-tolerant architectures they model. Though general purpose claims are often made, it is usually the case that the analysis is general purpose only within the generation of architectures they represent. Consequently the reliability packages that are available have a wide variety of capability and emphasis. In the following discussion a set of criteria describing the essential features of the assessment of foreseeable fault-tolerant avionics systems is developed and the most applicable of existing reliability programs are reviewed, relative to this norm.

The coverage of the system, or the chances that it can be successfully reconfigured to a degraded state after a fault occurs, depends on the ability of the system to detect its own errors and to perform the necessary actions leading to continued operation. Thus with fault-tolerance, reliability is a function of the system's capacity for self diagnosis and self repair as well as the usual considerations of structure and redundancy management. These features imply two basic sources of system failure, one source coming from the depletion of equipment

ORIGINAL PAGE IS
OF POOR QUALITY

below critical levels, the other due to lack of coverage (the probability the system can be successfully reconfigured after a failure). Therefore the criteria for evaluating reliability assessment programs must reflect the structure of these two sources of failure as a function of the performance required of the aircraft during flight.

A2.1 Criteria

The following points form a set of criteria or capabilities that would be desirable features in a reliability assessment program. The list can be compromised in certain situations, but to model future systems as they are now envisioned, most are important.

A2.1.1 System Features

Any assessment program must be capable of determining the system reliability. NASA's goal is a probability of failure of no more than 10^{-9} in 10 hours. Since this is a fairly demanding goal, its execution requires a well considered mathematical technique that can produce numerical precision with reasonable efficiency.

As a minimum the program should be sufficiently flexible to model the operational structure of the ARCS, SIFT, and FTMP architectures. This implies architectural structures having, among others, such features as triad operation singly or in

ORIGINAL PAGE IS
OF POOR QUALITY

parallel, flexed sparing with dynamic allocation, graceful degradation, and a k out of n definition of equipment depletion. In addition, it would be desirable if the program included such structural effects as dependent stages, substructures which themselves are redundant or fault-tolerant, ordered failures, or complicated network relationships between stages. (Note, a stage is a set of like components at a level replaceable by spares carried either in the ground or in onboard inventory.) The result of this modeling would be an explicit or implicit definition of the degraded system states and states of system failure to be used as input to the analysis portion of the assessment program.

Many traditional fault-tolerant systems have included spares as an integral part of the system design. There are three ways of modeling spares that have evolved: offline unpowered spares, online powered but passive spares, and online powered but active spares that are constantly flexed as part of the system so that knowledge of their working state is constantly updated. Both SIFT and FTMP at any instant of time have spare equipment of the latter type. ARCS makes no provision for on-line spares.

Since different demands are made on the system as a function of flight phase, the reliability model should reflect these varying requirements. If phasing cannot be incorporated in the modeling, the reliability should be demonstrated for the entire mission at the equipment level required for the most demanding phase.

ORIGINAL PAGE IS
OF POOR QUALITY

A2.1.2 Coverage

Given that a fault has occurred, the ability of the system to respond and continue its defined task in a degraded state is measured by coverage. Two quite different types of coverage models now appear in the literature. One is concerned with single point failures from which the computer cannot recover due to either long time delays in the recovery strategy, or because the fault belongs to the class of nonrecoverable faults for that system. Such models frequently model coverage nonstochastically, at least with regard to the time frame of the system's operation.

The other type of coverage model assumes categorically that the system can recover from all single faults, but that fault simultaneity of certain types causes system failure. Fault simultaneity in this context can mean either two or more faults coexisting in a nonreconfigured state or, less conservatively, two or more in a detected but nonreconfigured state. This model implies a stochastic model with emphasis on the vulnerable down period of the computer. Thus it is necessary to know not only what type of errors the system can withstand but how many it can tolerate at one time.

Failures in a fault-tolerant system can have two causes: permanent or transient, and be in several states reflecting the self diagnosis and self repair capacity of the computer. These are summarized below.

ORIGINAL PAGE IS
OF POOR QUALITY

Permanent faults can be in one of three states as a consequence of the systems detection, isolation, and recovery (DIR) strategy. The period of time that a permanent fault remains latent is a function of the detectors used in verifying its presence. Therefore any model of the effects of this fault must reflect the speed and extent of the capabilities of these detectors.

Every fault-tolerant computer has a built-in strategy for isolating a permanent fault once it has been detected. In as much as some systems use an error report to store information until a decision is possible, there is a potential delay in the response to the fault in this period. Models of this effect should at least be responsive to the strategies planned for the SIFT and FTMP systems.

With their emphasis on the continuity of production, fault-tolerant systems are designed so that reconfiguration time is very small once a fault has been isolated. Nevertheless, during reconfiguration the system may be even more vulnerable than it was during isolation. Therefore a fault in this state requires careful modeling based on an understanding of the processes involved and be flexible enough to respond to the design of a given system. Since the total vulnerable period due to both isolation and reconfiguration is likely to be very short it may be better to combine these effects into a single variable. This is particularly true in situations where there is insufficient information for modeling each in detail.

ORIGINAL PAGE IS
OF POOR QUALITY

Methods of modeling transient faults are not yet well understood. Despite this deficiency the assessment model should be sufficiently general to include more detail on this fault condition as information becomes available. The usual method is to assume that transient failures are independent with constant failure and duration rates. There are several possible difficulties with this approach. There is some evidence that transients may at times have a spatial impact inducing correlated response among faults. Another possibility is that failure rates might be component dependent in the sense that not all components in a stage would have the same inclination to display transient behavior. This means that the failure rate, though constant for a given component, might vary from component to component in a random fashion with some parts displaying a stronger tendency toward repeated transient behavior and others less so. Also, some designers envision an elaborate recovery mechanism for a transient, while others argue that the differences in response to transients, once detected, are no different than to permanent faults.

The designers of the FTMP have stated that the system can recover from all single point failures, most double failures but no triple or higher order failures that exist simultaneously in an unrecovered state. A similar statement is made by the SIFT architects. Thus programs that define system failure in this way have stochastic coverage models with features that are different from single point coverage models. Some of the desired features of such models are given below.

ORIGINAL PAGE IS
OF POOR QUALITY

Coverage is defined in terms of simultaneous equipment failures during the period of isolation and recovery from the triggering detected fault. Since the chances of simultaneity increases (with a corresponding decrease in coverage) whenever latent faults are included in the modeling, the requirement for latent fault modeling is substantial for coverage models of this type.

The definition of system failure in terms of simultaneous events implies that the coverage model is a function of the amount of available equipment at the time of failure. A possible consequence of this assumption is that the system may reach a point where increasing redundancy decreases reliability. When coverage is a function of the available equipment, a serious effort must be made to identify the set of equipment types whose simultaneous failure will be cause for concern. For some systems this mutual dependence of equipment will only extend within a stage. For other systems, in particular the FTMP, it will be extensive, and cross-couple equipment across stages.

A2.2 Program Review

Five reliability assessment programs have been reviewed for their suitability in meeting the criteria established in the previous section. Other programs exist for assessing the reliability of fault-tolerant computer systems that are not reviewed here. The analysis of such systems has grown so in sophistication during the last few years, particularly with regard to coverage, and many of the traditional reliability

ORIGINAL PAGE IS
OF POOR QUALITY

assessment programs no longer seem pertinent. The five programs or techniques are the reliability analyses for the prototype systems SIFT (ref. 1) and FTMP (ref. 2), and the general programs ARIES (ref. 3, 4, 5), CARSRA (ref. 6) and CARE II (ref. 7). CARE III, under development at Raytheon, is also a viable assessment program candidate but its features are not well defined at this time. Also, the basic assumptions of CAST (ref. 8), another assessment program, have been for the most part incorporated into ARIES which obtains a solution with far more efficiency, obviating the need for a separate review of the CAST program. The features of each of the five programs that are relevant to the outlined criteria are summarized in Tables I and II. The FTMP and SIFT assessment models were developed specifically for their individual architectures and since they do not exist as general purpose programs, they cannot be judged accordingly.

The five programs can be partitioned by the type of structure analyzed and the incorporated coverage model. The models for SIFT and FTMP contain a stochastic, simultaneous failure model of coverage; CARE II, CARSRA, and ARIES treat coverage nonstochasticly emphasizing recovery from single point failures. CARE II contains a separate coverage model which develops the mathematical interaction of the characteristics of the detectors used in sensing a fault by introducing the concept of competing detectors on fault classes. This analysis is then coupled with a model of the consequences on reconfiguration of time delays in the isolation and recovery strategies which determines the

ORIGINAL PAGE IS
OF POOR QUALITY

TABLE I

PROGRAM	STRUCTURE			COVERAGE MODEL	FAULT TYPES			MATHEMATICAL MODEL	
	TYPE	SPARES	PHASING		LATENT	NO. OF RECOVERY STAGES	TRANSIENT	MODEL	SOLUTION
FTMP	PARALLEL TMR K OUT OF N M STAGES	ON LINE CONSTANT FLEXING		STOCHASTIC		1	X	MARKOV AND COMBINATORIAL	SEPARATE MODELS SUMMED FAILURE RATES NUMERICAL INTEGRATION
SIFT	K OUT OF N M STAGES	INTEGRATED		STOCHASTIC	X	1	X	MARKOV	NUMERICAL INTEGRATION
CARE II	2 MODE M STAGES	ACTIVE & STANDBY		STOCHASTIC APPROXIMATION	X		X	COMBINED STATE TIME DEPENDENT MARKOV	NUMERICAL INTEGRATION
ARIES	STAGES IN SERIES K OUT OF N	ACTIVE & STANDBY		NON-STOCHASTIC			INCLUDES RECOVERY MODEL	MARKOV	MATRIX METHODS BASED ON EIGENVALUES
CARSRA	GENERAL	ON LINE		NON-STOCHASTIC	X		X	MARKOV	MATRIX METHODS

X = INCLUDED FEATURE

TABLE II

PROGRAM	FAILURE MODES						COVERAGE MECHANISM				
		LACK OF COVERAGE									
	EQUIPMENT DEGRADATION	SINGLE POINT FAILURE	TIME DELAYS IN RECOVERY	SIMULTANEOUS DOUBLE FAILURES IN RECOVERY	HIGHER ORDER SIMULTANEITIES		REFLECTS DETECTORS	REFLECTS ISOLATION STRATEGY	REFLECTS RECOVERY MECHANISM	WITHIN STAGE COUPLING	CROSS STAGE COUPLING
FTMP	X			SELECTED	X				X	X	X
SIFT	X			SELECTED	X		BROADLY		X	X	
CARE II	X	X	X				COMPETING ON FAULT CLASSES	X	X		
ARIES	X	X									
CARSRA	X	X								STRUCTURAL COUPLING	

X = INCLUDED FEATURE

ORIGINAL PAGE IS
OF POOR QUALITY

overall coverage parameters for the system under consideration. These parameters then feed the CARE II assessment program in much the same way as do similar parameters in ARIES and CARSRA where the parameters come in simply as constants with which to make parametric studies.

The stochastic coverage model of the FTMP is more elaborate than for SIFT. The FTMP model includes a careful analysis of all potential simultaneous double failures that can cause system failure plus all higher order simultaneities. This cross-couples the entire system in a manner similar to that described in the previous section on stochastic coverage models. The SIFT model does not cross-couple across stages and is not as complete in its analysis of double failures, but in other considerations is quite similar to the FTMP assessment.

With regard to structure the FTMP, SIFT, and ARIES programs basically model a k out of n gracefully degrading structure with some differences in spares utilization. The SIFT program is the closest to a true k out of n model and does not identify spares as such. The FTMP identifies spares but because of constant flexing through reidentification of the spare as an active unit, the model only admits to spares <u>per se</u> in its definition of failure modes. ARIES contains a spares model that includes both active and passive spare failure rates as well as two separate coverage parameters.

The k out of n structure for ARIES is imposed at the subsystem level and the system itself is assumed to be a serial connection of these subsystems. Thus system reliability is calculated by taking the product of the subsystem reliabilities obtained from ARIES. The FTMP model is really several models whose failure rates are added. One of these models represents system failure due to equipment degradation in the same way as ARIES. The FTMP coverage model, however, couples the entire system.

CARE II includes a k out of n gracefully degrading system that emphasizes a mode change when equipment levels degrade sufficiently. The model allows for a complete redefinition of system operation at this mode change. The time of mode change is triggered by the first subsystem or stage that degrades to this level and hence all stages are coupled. CARE II includes the option of powered or unpowered spares with two separate failure rates.

The structure model in CARSRA is the most versatile of the five. Though the final product is a serial connection of independent subsystems, the subsystems can have dependencies between components that may be complicated Boolean structures. It is even possible to model ordered failure relationships in CARSRA. Once the serial subsystems, the structural relationships within the subsystem, and the transition rates are defined, CARSRA produces a solution to the corresponding Markov state model.

All of the models base their analysis on finite state, constant rate, continuous time Markov processes and solve the resultant system of differential equations with matrix methods or numerical integration. All seem adequate for their intended purpose if the number of states does not become too large.

The programs differ most completely in their treatment of the various error states. With the exception of CARE II and the latest version of the SIFT assessment, the remaining programs pay little attention to the possibility of faults in a latent state or the architecture's isolation stragegy. They concentrate almost exclusively on the reconfiguration speed so the system is conditioned on assumed knowledge or the existence and location of the fault. The SIFT assessment allows faults to be in either latent, recovery or reconfigured states, and CARE II includes the elaborate fault analysis discussed previously.

A2.3 Recommendations

Table I pinpoints two reasons why the evolution of reliability assessment programs of fault-tolerant systems is difficult: the wide variety of features thought to be pertinent in assessing these systems and the lack of agreement about which is the most important set. The most pronounced difference is with regard to the modeling of coverage which is also the primary contributor to system failure for the mission times under consideration. In particular, the assessment programs for the three architectures; ARCS, SIFT, and FTMP; display this difference

in their modeling of coverage, although those for SIFT and FTMP are relatively in agreement. Thus, in effect, two separate coverage models are required to model these three systems.

For the more traditional nonstochastic coverage model both CARSRA and ARIES seem viable alternatives. CARSRA is the most versatile with respect to structure but is severely size limited while ARIES can handle more states.

The assessment programs for the SIFT and FTMP architectures provide the only stochastic models of coverage. Since both now model the various influences on system failure in terms of separate models, neither seem suitable as general purpose programs, which of course was not their intent. Thus, it is recommended that a single general purpose reliability assessment program be developed that will incorporate a stochastic coverage model to evaluate the impact on system failure of "nearly simultaneous failures" as well as the interaction of the four fault types; latent, detected but not isolated, isolated but not reconfigured, and transient.

CARE III, now under development, may well provide this resource. If not, a straightforward Markov model of these effects seems quite feasible as large, pure death, Markov processes involving hundreds of states can be solved quite cheaply using classical matrix methods for solving systems of differential equations. Though the pure death property is violated when transients are

included in the model, the deviations are slight and should not prove unsurmountable.

A2.4 Software Reliability

The area of software reliability is in a state of great transition and although much is hypothesized regarding its nature, little is known in terms of quantitative results. The subject is comparatively undeveloped partially because it has not seen the same degree of expenditure as that devoted to a similar exercise for hardware but also because it is very difficult to conceptualize. At present the bulk of the resources are being spent on the development of methods for producing more reliable, more easily maintained software such as structured programming, program processing, and fault-tolerant software techniques utilizing alternate algorithmns. To a lesser extent are programs being evaluated in terms of their failures and failure characteristics, which is a more difficult question. Its difficulty lies partially in the impracticality of using standard experimental techniques.

There are three traditional methods for establishing the reliability of a device: mathematically modeling the dependence of the device on constituents of known reliability, building a computer simulation of the device, seeding it with typical errors and probing for failures or gathering historical experience by introducing a copy or copies of the device to the working environment and recording the failures. The first

of these is rarely viable in a software context in that establishing the reliability of constituents is a problem of the same magnitude as the original and their interdependence is often complicated. The second method too is difficult in that little is known or the structure and relative frequency of typical program errors relative to a given program. Thus simulation by conditioning on a seeded "typical" error set is an interesting but extremely premature concept until more research has been conducted on predicting program failure modes. The third method offers some potential and is the method on which most modeling to date has been based. These models primarily assume an exponential time to failure with a decreasing failure rate that depends on the number of bugs remaining in the program. A recent review and evaluation of the more popular models (ref. 10) indicates that there is still more work necessary before predicting software reliability is a reality. In time it is hoped that studies on how programs fail will also provide some information on features of the program which can be measured as predictors of failure probability or rate.

REFERENCES

1. Wensley, John H., et al, "SIFT: Design and Analysis Fault-Tolerant Computer for Aircraft Control," Proceedings of the IEEE, Vol. 66, No. 10, October 1978.
2. Hopkins, Albert L., "FTMP: A Highly Reliable Fault-Tolerant Multiprocessor for Aircraft," Proceedings of the IEEE, Vol. 66, No. 10, October 1978.
3. Ng, Y.W. and A. Avizienis, "A Reliability Model for Gracefully Degrading and Repairable Fault-Tolerant Systems," Digest of the Seventh International Symposium on Fault Tolerant Computing, Los Angeles, CA, pp 22-28, May 1977.
4. Ng, Y.W. and A. Avizienis, "ARIES - An Automated Reliability Estimation System," Proceedings 1977 Annual Reliability and Maintainability Symposium, Philadelphia, pp 108-113, January 1977.
5. Ng, Y.W. and A. Avizienis, "A Model for Transient and Permanent Fault-Recovery in Closed Fault-Tolerant Systems," Digest of the Sixth International Symposium on Fault-Tolerant Computing, Pittsburgh, PA, pp 182-188, June 1976.
6. Bjurman, B.E., et al, "Airborne Advanced Reconfigurable Computer System, ARCS," NASA CR-145024, August 1976.
7. "An Engineering Treatise on the CARE II Dual Mode and Coverage Model," NASA CR-144993, Raytheon Equipment Development Laboratory, April 1976.
8. Cann, B.R., et al, "CAST - a Complementary Analytic - Simulation Technique for Modeling Complex, Fault Tolerant Computing Systems"

in AGARDO graph #224, Integrity in Electronic Flight Control Systems, AGARD - NATO Neuilly - Sur - Seine, France, April 1977.

9. Bellman, Richard, Introduction to Matrix Analysis, McGraw-Hill 1960.

10. Sukert, A.N., "A Multi-Project Comparison of Software Reliability Models," Proceeding or the AIAA Conference on Computers in Aerospace, Los Angles, CA, October 1977, p 413.

APPENDIX VI

Typical SIFT, FTMP and FTFCS Concepts

This appendix provides a description of typical fault tolerant concepts as examples of the type of equipment the Cost and Benefit Design Optimization Model should be capable of optimizing.

1.0 INTRODUCTION

The technological foundations for fault-tolerant flight control systems (FTFCS) have been laid and avionics are being built which can be used in advanced commercial aircraft. The impact of an FTFCS approach is being studied in terms of advanced navigation, stability augmentation, displays, and fly-by-wire (references 1 and 2).

The purpose of this section is to provide overview descriptions of various candidate FTFCS architectures which have been studied in the development of the economic evaluation model.

There are two principal candidate FTFCS architectures. The Software Implemented Fault-Tolerant (SIFT) system, designed by SRI International, is being built as an engineering prototype by the Bendix Corporation. The Fault-Tolerant Multiprocessor (FTMP), designed by Charles Stark Draper Laboratories, is being built for flight tests by Collins Radio. This report will contain discussions of each of the two principal systems and will contain discussions of some alternative approaches to fault-tolerance as well. It must be understood that only the first two have been designed specifically for flight control of commercial airplanes so the details of the other systems involve some internal guesswork with respect to costs, reliability, etc. The discussions of the alternative systems will be brief and will depend upon the concepts laid down in the descriptions of SIFT and FTMP.

The descriptions of FTMP, SIFT, and the alternative fault-tolerant systems are intended to provide information to the reader not already acquainted with such fault-tolerant designs; it is not the intent that the following material should provide formal or entirely accurate system specifications.

With that disclaimer, this discussion will now center on the principle subjects of comparison; SIFT and FTMP. This report will describe each system in terms of fault response and reconfiguration. Other details will be provided if they help describe the mechanisms of fault response and reconfiguration.

ORIGINAL PAGE IS
OF POOR QUALITY

1.1 SIFT and FTMP Comparison

SIFT and FTMP share many redundancy management concepts. An executive program in each system is responsible for the detection of faults as well as system reconfiguration. Both use triple modular redundancy (TMR) in order to detect faults and to mask the effect of the fault to subsequent processes. In this report, a fault is defined as an error in data caused by a malfunction of some system component. Masking is the act of covering a fault by choosing, by majority vote, a value to represent the set of redundant outputs (reference 3). SIFT and FTMP not only identify and mask hardware faults, they also locate and replace the faulty component with a healthy part as long as spares are available. Beyond locating their source, no attempt is made to determine the nature of the failures that produce faults. When spares are exhausted, both systems have an identified set of critical tasks which will remain active at the expense of some of the noncritical tasks. SIFT and FTMP are both multiprocessors and must manage concurrent different tasks, as well as redundant tasks.

1.1.1 Requirements

Both SIFT and FTMP are designed to be extremely survivable, centrally located FTFCS computers capable of performing such life critical functions as active controls, total fly-by-wire, and total system management.

Specifically, both SIFT and FTMP are designed to meet the functional and reliability requirements of a flight control computer system. These requirements are:

- Reliability goal--less than 10^{-9} probability of catastrophic failure during a 10-hour flight.

- Fault coverage--all independent permanent and transient hardware faults.
- Reliability approach--multiple processors use redundant computations to mask faults, diagnose malfunctioning processors, and to reconfigure or reallocate tasks.
- Computational throughput--an overall processor load of about 500,000 operations/second.

ORIGINAL PAGE IS
OF POOR QUALITY

ORIGINAL PAGE IS
OF POOR QUALITY

2.0 SOFTWARE IMPLEMENTED FAULT-TOLERANCE (SIFT)

As the name implies, SIFT is a fault-tolerant system where reliability results from software techniques rather than through hardware fault-tolerance and fault avoidance mechanisms (reference 4). That is, SIFT achieves fault-tolerance through its task allocation strategies and through voting mechanisms and error isolation mechanisms built into the operating system.

2.1 SIFT Hardware

The hardware architecture to support fault-tolerant operations in SIFT is remarkably simple. SIFT consists of up to eight processors (six, nominally) connected to each other by a broadcast interface. See figure 1. Each processor has its own local memory with a copy of every SIFT task. Each processor communicates serially with external sensors and actuators. Figure 2 depicts the processor interface for one SIFT module.

There are no built in test devices, error correcting/detecting busses, component isolation devices, or other special equipment to enhance reliability or detect malfunctions.

The SIFT processor is a stock Bendix BDX 930 designed primarily for avionic applications. The main memory contains 30 K, 16 bit words and contains both system and flight applications programs. A 1 K, 16 bit scratch pad or data file is used to store the temporary results produced by the processor's tools. A 1 K, 16 bit transaction file is used to control the configuration and destinations of task outputs. The external bus is a MIL-STD-1553A serial half duplex link. Each 1553A can support up to 32 remote terminals with associated actuators and sensors. The broad cast interface is simply a write-only area in every processor which any given processor can access. The destination write areas for each piece of information produced by SIFT is stored in the transaction file (reference 5). Each processor, memory, and 1533 bus occupies a standard 1/2 ATR short LRU. See figure 3 for a list of important characteristics of the SIFT LRU.

ORIGINAL PAGE IS
OF POOR QUALITY

SIFT REDUNDANCY VIEW

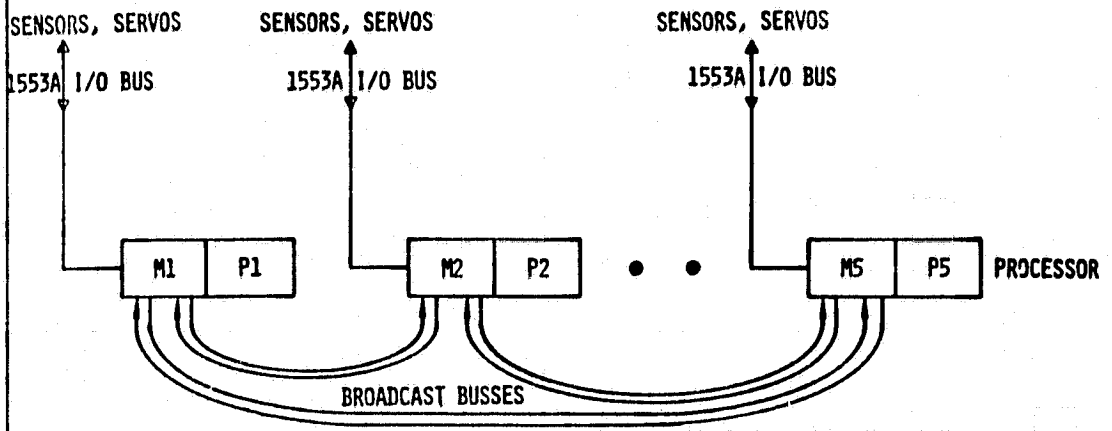

MODULE COMPLEMENT (EACH PROCESSOR)

MEMORY 1	MEMORY INTERFACE & CONTROL
MEMORY 2	CENTRAL PROCESSOR UNIT
POWER SUPPLY	PROCESSOR INTERFACE
TIMING & CONTROL	BROADCAST/RECEIVER
1553A CONTROLLER	

FIGURE 1

SIFT - PROCESSOR COMMUNICATION VIA BROADCAST BUS

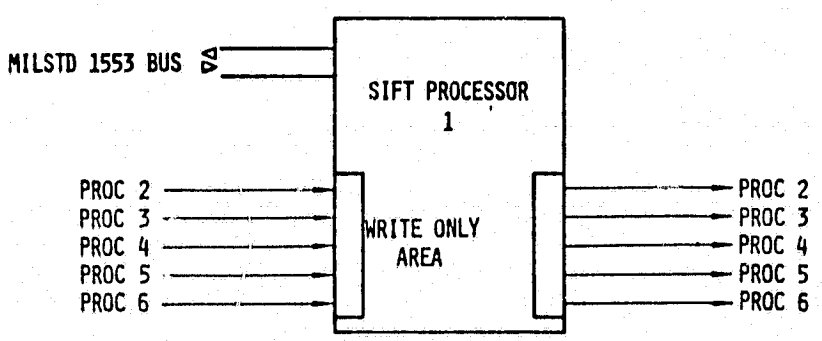

FIGURE 2

ORIGINAL PAGE IS
OF POOR QUALITY

SIFT LRU CHARACTERISTICS

- LRU SIZE: 4.35 x 7.6 x 12.6 IN.
- ENVIRONMENT: CABIN CONDITIONED
- POWER REQUIREMENTS: 28 V 1 W/BATTERY BACKUP
- ESTIMATED MTBF: 6500 HR.
- INTERCONNECTIONS: BROADCAST/WRITE ONLY
  INTERFACE TO ALL 5 OTHER PROCESSORS
- COST: $27,000 (1979 DOLLARS)
- THROUGHPUT: 500 KOPS GIBSON MIX-RAW
- INPUTS: (MIL STD 1553 EXTERNAL DATA BUS/1M HZ BPS/32 PORTS)
- OUTPUTS: (MIL STD 1553 EXTERNAL DATA BUS/1M HZ BPS/32 PORTS)
- MINIMUM NO. OF THIS COMPONENT REQUIRED FOR SUCCESSFUL OPERATION: 4
- STANDARD NO. OF THIS COMPONENT AVAILABLE: 6
- MAXIMUM NO.: 8

FIGURE 3

2.2 SIFT Software

The essential characteristic of SIFT is the ability to detect a fault in a processor module. A fault is detected by voting, and voting is performed on the outputs of applications or global executive tasks. Only manfunctions which cause a disparity among the voters will be detected.

With a risk of oversimplifying some important steps, we will attempt to describe how and when this voting takes place and what results therefrom.

ORIGINAL PAGE IS
OF POOR QUALITY

2.2.1 SIFT Scheduling

In SIFT, tasks are scheduled periodically according to the priority strategy show in figure 4. To illustrate voting, some details of the scheduling process will be explained. The highest priority frames (approximately 20 ms) are divided into subframes (about 2 ms) with each task assigned to a specific subframe depending on its voting dependencies. Prior to scheduling a task, the executive gathers the task's input data from producing processors, votes that data, and then releases it to the task about to be scheduled. Lower priority tasks are voted similarly but are not dependent upon their scheduling sequence within their priority frame. They double buffer their outputs and use, as inputs, data produced during the previous time frame. Figure 5 shows this double buffering mechanism. Even with the high priority task scheduling, SIFT is designed to allow up to 50 μsec of skew between processors.

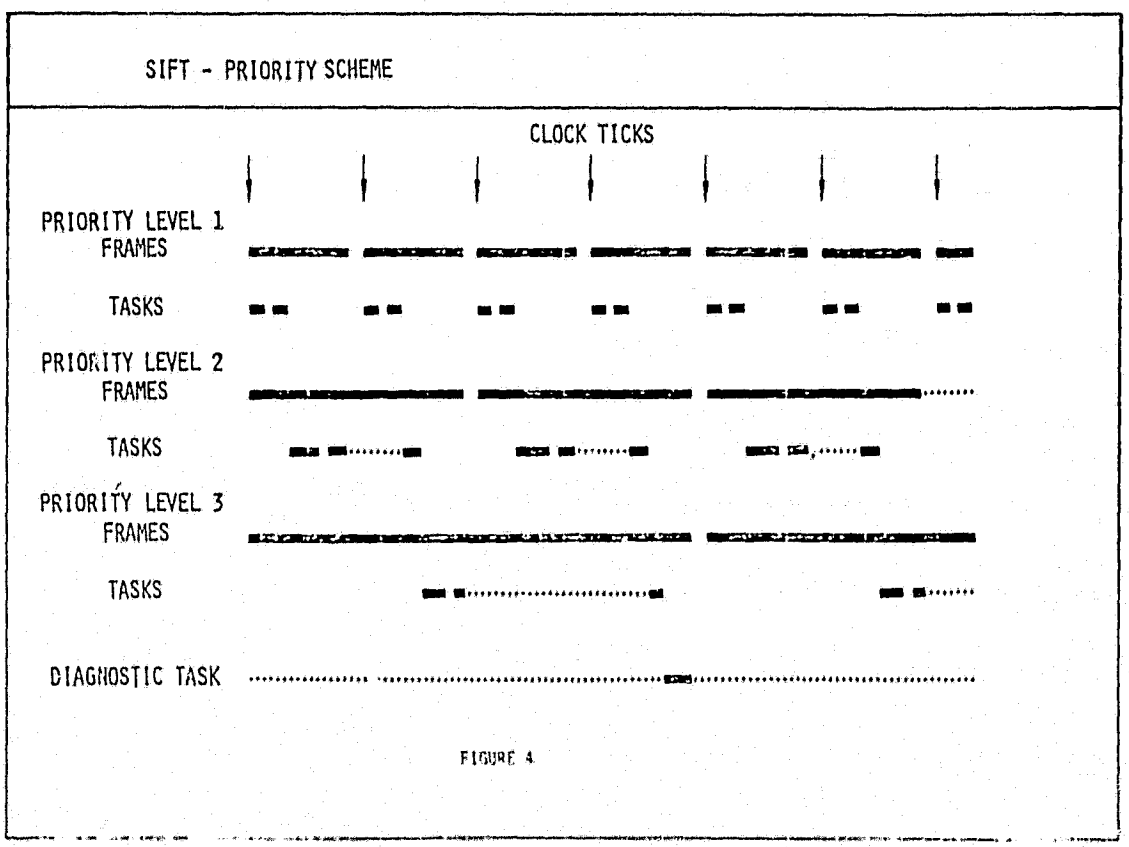

FIGURE 4

ORIGINAL PAGE IS
OF POOR QUALITY

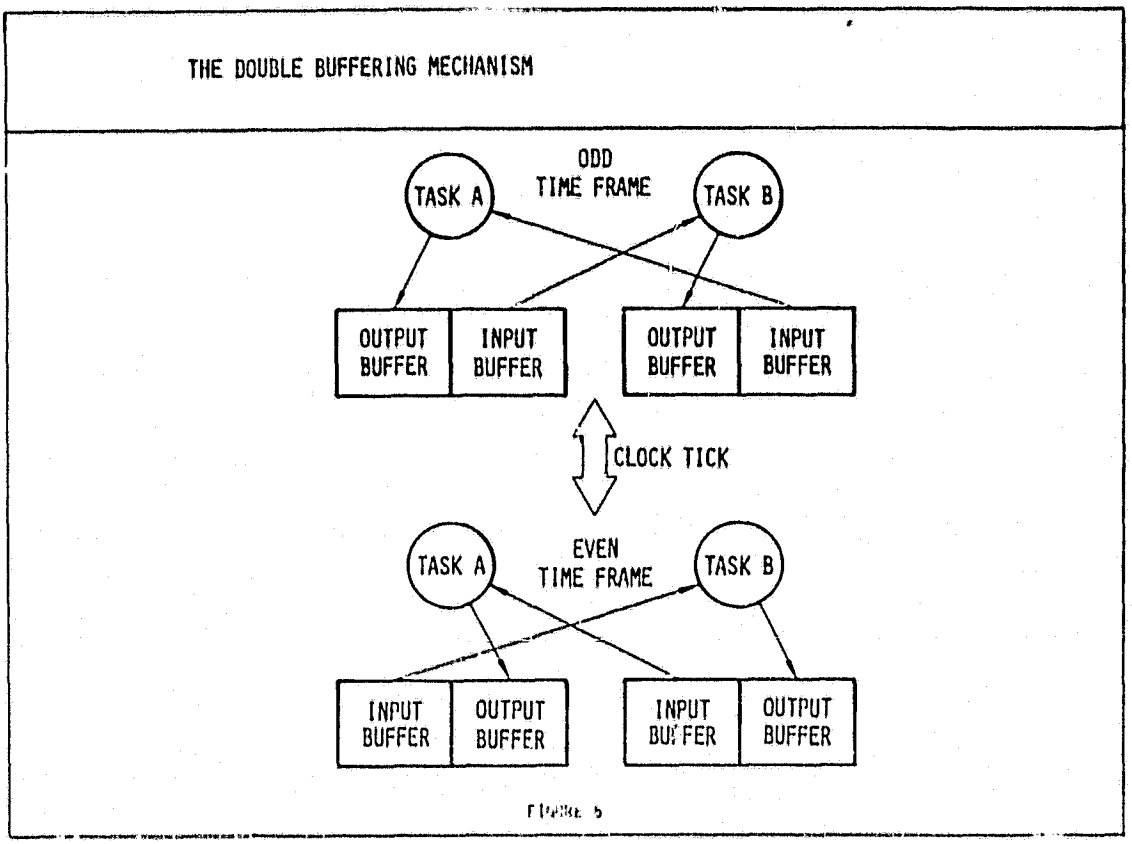

2.2.2 SIFT Voting

When an error is detected by voting, the error is masked and recorded in a processor error table. The offending processor, however, remains active until an error count threshhold is reached at which time the processor is declared faulty and its tasks are reallocated, as shown in figure 6. Figure 7 contains a brief algorithmic description of the voting and masking process.

2.2.3 SIFT Executive

In a system of SIFT processors, no single processor has permanent or temporary hegemony. Each processor has its own local executive. A global executive also exists and is run as a triplicated periodic task. The local

ORIGINAL PAGE IS
OF POOR QUALITY

RECONFIGURABLE VOTING

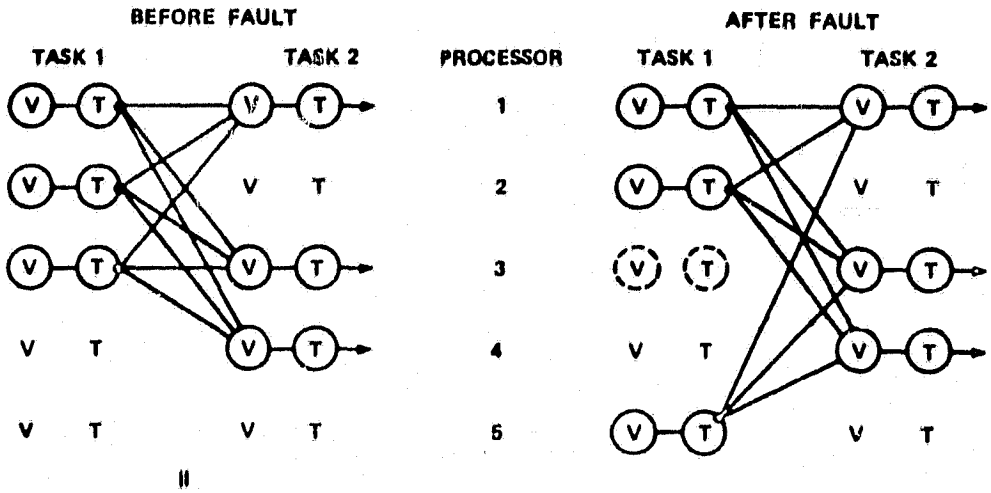

FIGURE 6

VOTING ALGORITHM TRANSLATION

LOOK IN THE BUFFER AREA FOR EACH PROCESSOR AND DO THE FOLLOWING:

- LOOK FOR BUFFER ADDRESS OF DESIRED VALUE
- IF BUFFER.OFFSET IS ACTIVE
  - THEN ASSIGN BUFFER TO SET 'W'
  - ELSE ASSIGN BUFFER TO SET 'Z'
- READ VALUE AND CHECK FOR CONSENSUS
- IF CONSENSUS EXISTS
  - THEN BEGIN
    IF VALUE = CONSENSUS VALUE
    - THEN ASSIGN BUFFER TO SET 'X'
    - ELSE ASSIGN BUFFER TO SET 'Y'

    IF BUFFER IN SET 'Y'
    - THEN BEGIN
      SET BUFFER VALUE TO CONSENSUS VALUE
      SET FLAG IN ERROR TABLE
      END

    END
  - ELSE FILL ALL BUFFER VALUES IN SET 'W' WITH 'SAFE' VALUE

FIGURE 7

executive:

- Scheduled tasks
- Votes input data and reports errors
- Handles task output buffers
- Handles errors locally

The global executive:

- Monitors error tables to look for processors with permanent faults
- Allocates tasks to processors
- Handles reconfigurations due to changes in flight phase

It can be seen from the above admittedly simplistic discussion of the SIFT fault-tolerant implementation, that no hardware mechanisms are used to detect faults or to manage the system reconfiguration. Thus the model definition of reconfigurable components turns out to be very simple. Essentially there is only one reconfigurable component - the processor. The processor is used for whatever tasks allocated to it by the global executive until a permanent fault is detected. In the event of a permanent fault, the processor's tasks are all allocated to other processors. The faulty processor is ignored by its fellow processors even though it may write information into their broad-cast interface. The SIFT design approach is not restricted to the BDX 930 computer system but could be used with other processors.

2.3 SIFT System Degradation

In a SIFT system, the amount of redundancy employed is dynamic and is a function of the criticality of a given task and the current state of the system. One implication is that, in the presence of several successive failures, a SIFT could be gracefully degraded in steps from a system of several T.M.R. processing channels to a single nonredundant channel. However, the clock generator synchronization algorithm employed (see figures 8 and 9) requires that at least four SIFT LRU's with four nonfailed clocks be operational to ensure timing integrity. Thus, the number of failed LRU's that should be tolerated in a six processor SIFT is two.

ORIGINAL PAGE IS
OF POOR QUALITY

SIFT CLOCK SCHEME

THREE CLOCKS,(ONE CLOCK FAILED)

CLOCK 'A' SEES: 8 (CLOCK 'A') 7 (CLOCK 'B') 9 (CLOCK 'C')

MEDIAN CLOCK = CLOCK 'A'

CLOCK 'C' SEES: 8 (CLOCK 'A') 10 (CLOCK 'B') 9 (CLOCK 'C')

MEDIAN CLOCK = CLOCK 'C'

IN THE CASE WHERE A CLOCK FAILS SUCH THAT IT CAUSES TWO GOOD CLOCKS TO 'SEE' IT DIFFERENTLY, THE MEDIAN CLOCK ALGORITHM MAY FAIL AND THE GOOD CLOCKS MAY DIVERGE.

FIGURE 8

SIFT CLOCK SCHEME

FOUR CLOCKS (ONE CLOCK FAILED)

CLOCK 'A' SEES: 8 (CLK 'A') NIL (CLK 'B') 9 (CLK 'C') 10 (CLK 'D')

MEDIAN CLOCK = CLOCK 'C'

CLOCK 'C' SEES: 8 (CLK 'A') NIL (CLK 'B') 9 (CLK 'C') 10 (CLK 'D')

MEDIAN CLOCK = CLOCK 'C'

CLOCK 'D' SEES: 8 (CLK 'A') NIL (CLK 'B') 9 (CLK 'C') 10 (CLK 'D')

MEDIAN CLOCK = CLOCK 'C'

HERE, EACH CLOCK TAKES A MAJORITY VOTE OF THE VALUES 'SEEN' FOR A GIVEN CLOCK BY ALL OTHER CLOCKS.

IF NO SUCH MAJORITY EXISTS, THEN A VALUE OF 'NIL' IS GIVEN TO THE PARTICULAR CLOCK, THUS, DIFFERING READINGS OF ONE FAILED CLOCK DO NOT DESTROY THE MEDIAN ALGORITHM.

3.0 FAULT-TOLERANT MULTIPROCESSOR (FTMP)

The FTMP is a fault-tolerant system where reliability results from hardware fault-tolerance and fault avoidance mechanisms along with software implemented component reconfiguration mechanisms built into the operating systems (Reference 8).

The FTMP operates from a system view as a highly reliable three-processor multiprocessor consisting of an independent processor/cache-memory for each channel; all three communicate, via serial bus lines, with a single three page mass memory and several task dedicated I/O ports. This multiprocessor viewpoint is shown in Figure 10 The fault-tolerance of FTMP comes from the fact that TMR is employed for each processor, each memory page, each data line, and each module's incoming clock signal. Hardware bit-by-bit voting is performed on all data transfers and all single errors are masked by taking a majority value (2 out of 3 vote). An executive program periodically searches the system for set error-latch registers, reconfigures the system (by reassigning bus-module associations) to pinpoint disruptive modules, and takes failed units off line, replacing them with spares.

3.1 FTMP Hardware

With the exception of bus lines, all components in the FTMP system are contained in ten identical LRU's. Each LRU contains:

- One CPU/cache
- One 16K main memory module
- One clock generator
- One power supply
- One I/O port
- Bus interfaces
- Two bus controllers (BGU's)
- Other hardware

Of these, the CPU/cache, the main memory module, the clock, and the I/O port are fully reconfigurable. The LRU itself is not a reconfigurable part. Figure 11 shows the FTMP LRU main components.

ORIGINAL PAGE IS
OF POOR QUALITY

FTMP - MULTIPROCESSOR VIEW

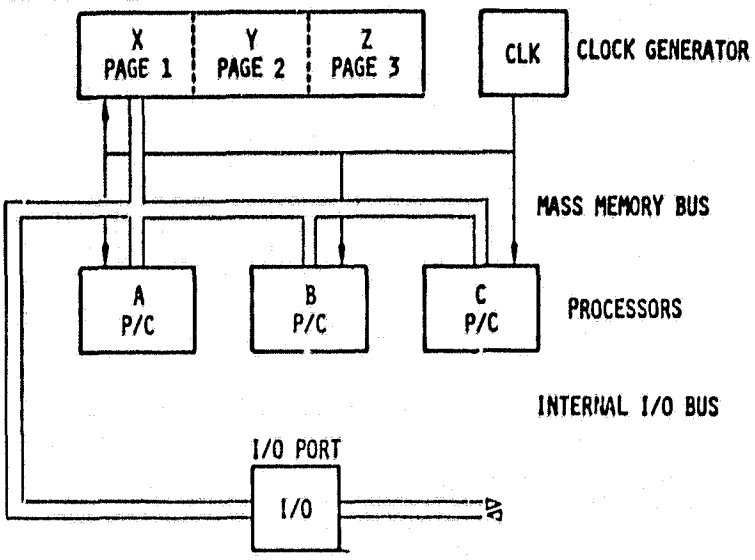

FIGURE 10

FTMP - LRU MAIN COMPONENTS

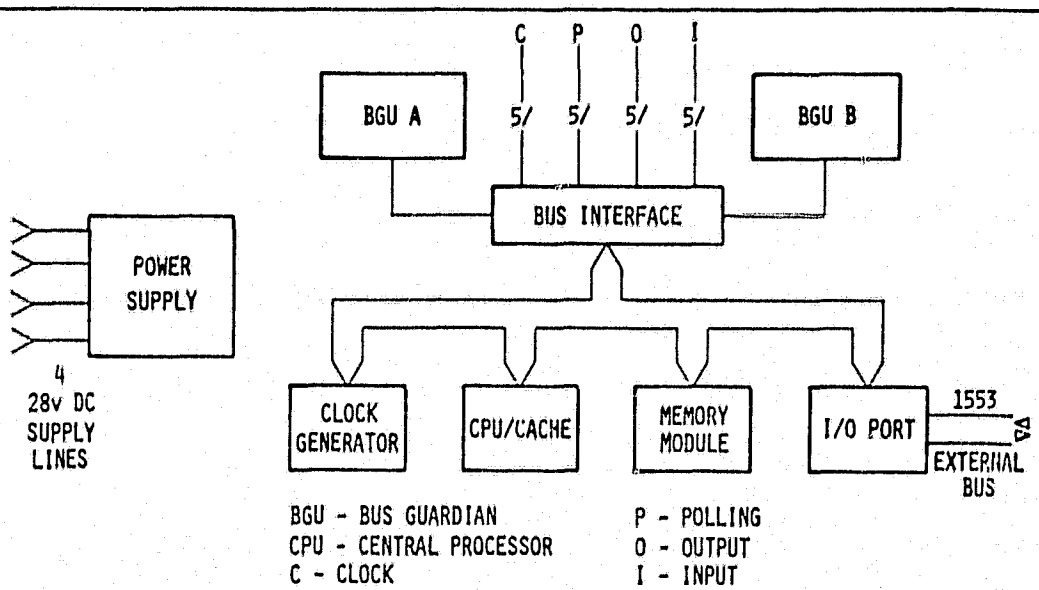

FIGURE 11

Figures 12 through 16 contain important characteristics of the reconfigurable components of an FTMP. Characteristics are also supplied in figure 16 for the FTMP LRU; since all components are contained within it, the LRU's characteristics provide references for many characteristics of the reconfigurable components.

Each LRU contains its own power supply, which like the BGU's and the bus interface, is nonreconfigurable. All components within the LRU are supplied 5 VDC by this power supply. The power supply itself draws 28 VDC from a quadruple redundant system-wide main power source. See figure 10.

In addition to those components contained in the FTMP LRU, there are a total of 20 back-plane mounted bus lines divided into four different types: five 'O' lines for processor to memory data transfers; five 'I' lines for memory to processor data transfer; five 'C' lines for clock signal transfers; and five 'P' lines used for bus contention resolution. Each bus line has its own dedicated power supply.

ORIGINAL PAGE IS
OF POOR QUALITY

ORIGINAL PAGE IS
OF POOR QUALITY

PROCESSOR/CACHE

- SIZE

  - DIMENSION: 8 - 1/2 ATR CARDS
  - WEIGHT: NA

- ENVIRONMENT: SEE LRU

- POWER REQUIREMENT

  - 5 VDC
  - SOURCE: LRU'S OWN POWER SUPPLY

- PHYSICAL INTERCONNECTIONS

  - BUS LINES: SEE LRU
  - INTERFACE TO
    10 MEMORY MODULES
    10 I/O PORTS
    10 CLOCKS

- RELIABILITY: MTBF = 20,000 HOURS

  COST α CARD COUNT

- THROUGHPUT: 500 KOPS (GIBSON MIX)
- INPUT: SEE LRU

OUTPUT: SEE LRU

- COMPLEMENT: 10

- MINIMUM COMPLEMENT: 2

FIGURE 12

ORIGINAL PAGE IS
OF POOR QUALITY

MEMORY MODULE

- SIZE
  - DIMENSION: TWO 1/2 ATR CARDS
  - WEIGHT: DNA
- ENVIRONMENT: SEE LRU
- POWER REQUIREMENTS
  - 5 V.D.C.
  - SOURCE: LRU'S OWN POWER SUPPLY
- PHYSICAL INTERCONNECTIONS
  - BUS LINES: SEE LRU
  - INTERFACE TO 10 PROCESSOR/EACH MODULES
- RELIABILITY: NA (APPROX. 20,000 HOURS)
- COST α CARD COUNT
- THROUGHPUT: CYCLE TIME = NA
- INPUT: NA
- OUTPUT: NA
- COMPLEMENT: 10
- MINIMUM COMPLEMENT: 2

FIGURE 13

ORIGINAL PAGE IS
OF POOR QUALITY

CLOCK

- SIZE

  - DIMENSION: ONE-HALF 1/2 ATR BOARD
  - WEIGHT: NA

- ENVIRONMENT: SEE LRU

  POWER REQUIREMENTS

  - 5 VDC
  - SOURCE: LRU'S OWN POWER SUPPLY

- PHYSICAL INTERCONNECTIONS

  - INTERFACE TO ALL OTHER SYSTEM MODULES VIA 5 'C' BUS LINES

- RELIABILITY: MTBF = 30,000 HOURS

- COST α CARD COUNT

- THROUGHPUT: NA

- INPUT: NA

- OUTPUT: NA

- COMPLEMENT: 10

- MINIMUM COMPLEMENT: 4

FIGURE 14

ORIGINAL PAGE IS
OF POOR QUALITY

BUS LINE

- SIZE: NA
- ENVIRONMENT
  - COCKPIT
  - SYSTEM BACKPLANE
- POWER REQUIREMENTS
  - 28 V.D.C.
  - SOURCE: OWN POWER SUPPLY
- PHYSICAL INTERCONNECTIONS
  - ALL TWENTY BUS LINES CONNECTED TO EACH LRU'S BUS INTERFACE
- RELIABILITY: NA (DEPENDS ON POWER SUPPLY)
- THROUGHPUT: NA
- INPUT: 16 MHZ DATA RATE
- OUTPUT: 16 MHZ DATA RATE
- COMPLEMENT: 20
- MINIMUM COMPLEMENT
  - LOGICAL MINIMUM
    - 5 'P' LINES
    - 3 'O' LINES
    - 3 'I' LINES
    - 4 'C' LINES

FIGURE 15

ORIGINAL PAGE IS
OF POOR QUALITY

I/O PORT

- SIZE

  - DIMENSION: THREE 1/2 ATR CARDS
  - WEIGHT: NA

- ENVIRONMENT: SEE LRU

- POWER REQUIREMENTS

  - 5 VDC
  - SOURCE: LRU'S OWN POWER SUPPLY

- PHYSICAL INTERCONNECTIONS

  - INTERNAL COMMUNICATION: SEE LRU (BUS LINES)
  - INTERFACE TO
    10 PROCESSOR/CACHE MODULES
    SENSORS AND ACTUATORS

- RELIABILITY: MTBF = 30,000 HOURS

- COST∝CARD COUNT

- TRHOUGHTPUT: NA

- INPUT

  - MIL STD 1553 SIMPLEX
  - 8 MHZ DATA RATE

- OUTPUT

  - MIL STD 1553 SIMPLEX
  - 8 MHZ DATA RATE

- COMPLEMENT: 10
- MINIMUM COMPLEMENT: 1

FIGURE 16

ORIGINAL PAGE IS
OF POOR QUALITY

LRU

- SIZE

  - DIMENSION: 1/2 ATR LONG STANDARD BOX CONTAINING 21 1/2 ATR CARDS
  - WEIGHT: 40 LBS.

- ENVIRONMENT: COCKPIT

POWER REQUIREMENTS

  - 28 VDC/150 WATTS
  - FOUR LINES
  - SOURCE: AIRCRAFT GENERATORS; BATTERY BACKUP

- PHYSICAL INTERCONNECTIONS

  - 20 BUS LINES
  - INTERFACE TO ALL NINE OTHER LRU's

RELIABILITY: MTBF = 2000 HOURS

- COST: $35,000 (1979 $'s)

- THROUGHPUT: NA

INPUTS

  - ONE I/O PORT
  - MIL STD 1553 EXTERNAL BUS

- OUTPUTS

  - ONE I/O PORT
  - MIL STD 1553 EXTERNAL BUS

- COMPLEMENT: 10

- MINIMUM COMPLEMENT: 4

FIGURE 17

3.2 FTMP Software

While the fault detection and masking of FTMP are implemented by hardware devices, system configuration, reconfiguration, and task assignment are software implemented.

3.2.1 FTMP Executive

The executive program is responsible for maintaining the state of the system. This includes initialization of the system into the following configuration:

- Three processor/cache triads
  (Nine of ten processors used)
- Three main memory pages - each a triad.
  Page one contains system and applications programs and is written in non-volatile form (R.O.M.). Page two contains dynamic variables. Page three is not needed for fully configured operation.
  (Nine of ten processors used)
- One clock quad.
  (Four of ten clocks used)
- Several I/O ports - one per active task.

Figure 18 shows a fully configured system; note that the presence of a failed module within an LRU does not affect the ability of other modules in that LRU to be configured into triads or quads.

The module configuration explained above is accomplished by the assignment of the proper bus lines to active modules.

3.2.1.1 FTMP Bus Line Assignments

A fully configured active bus network consists of:

- One '0' line triad - each member of a P/C triad 'talks' to main memory over one member of the current '0' line triad.

ORIGINAL PAGE IS
OF POOR QUALITY

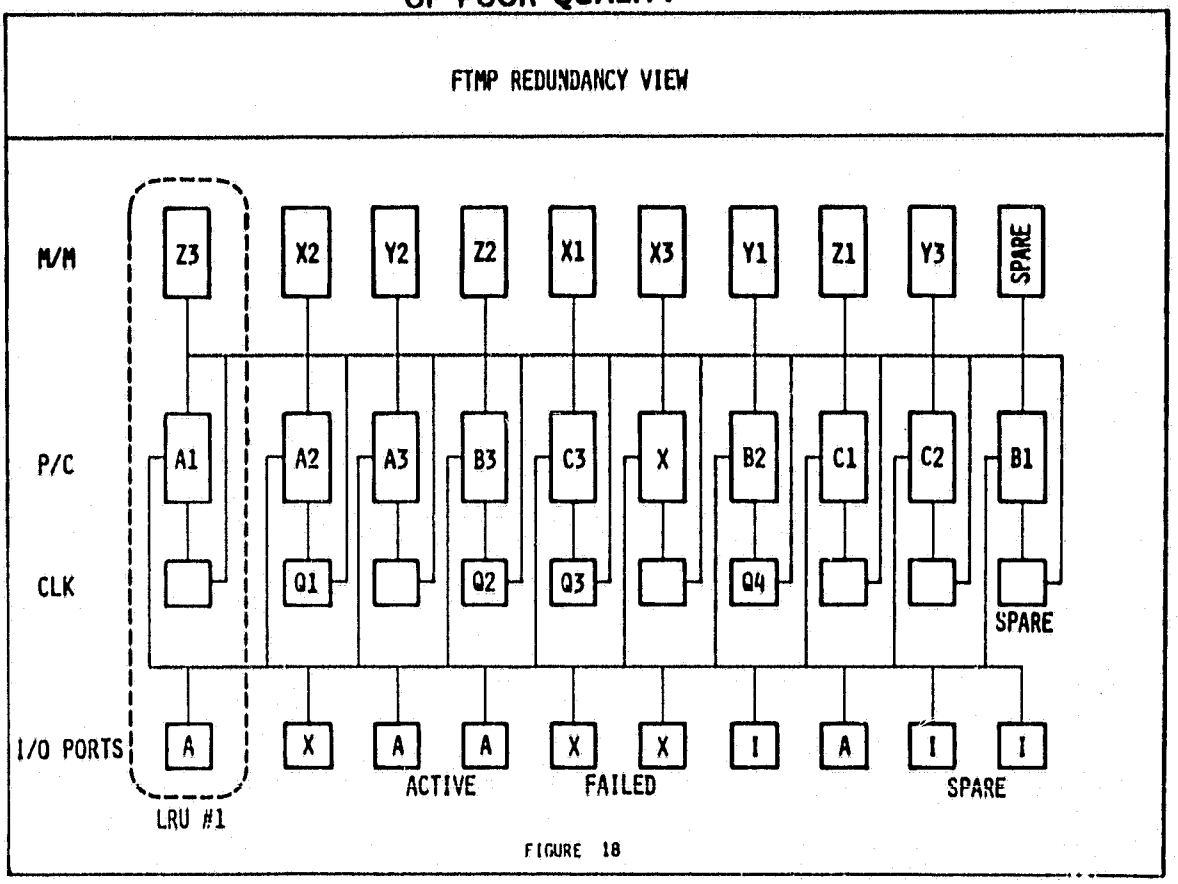

FIGURE 18

(Three of five lines used) See figure 19.

- One 'I' line triad - each member of a main memory page sends data to a P/C over one member of the current 'I' line triad. (Three of five lines used) See figure 20.

- One 'C' line quad - four clocks (in phase locked loop) are necessary to prevent drift; each module selects three out of four active 'C' lines to form its clock triad. (Four of five lines used) See figure 21.

- All five 'P' lines are available to 'poll' the current bus triads and quad for access.

The bus assignments above (as determined by the executive) are maintained by a dual redundant bus controller, called the Bus Guardian Unit (BGU), in each LRU. Bus assignment consists of the controller's latching of the

ORIGINAL PAGE IS
OF POOR QUALITY

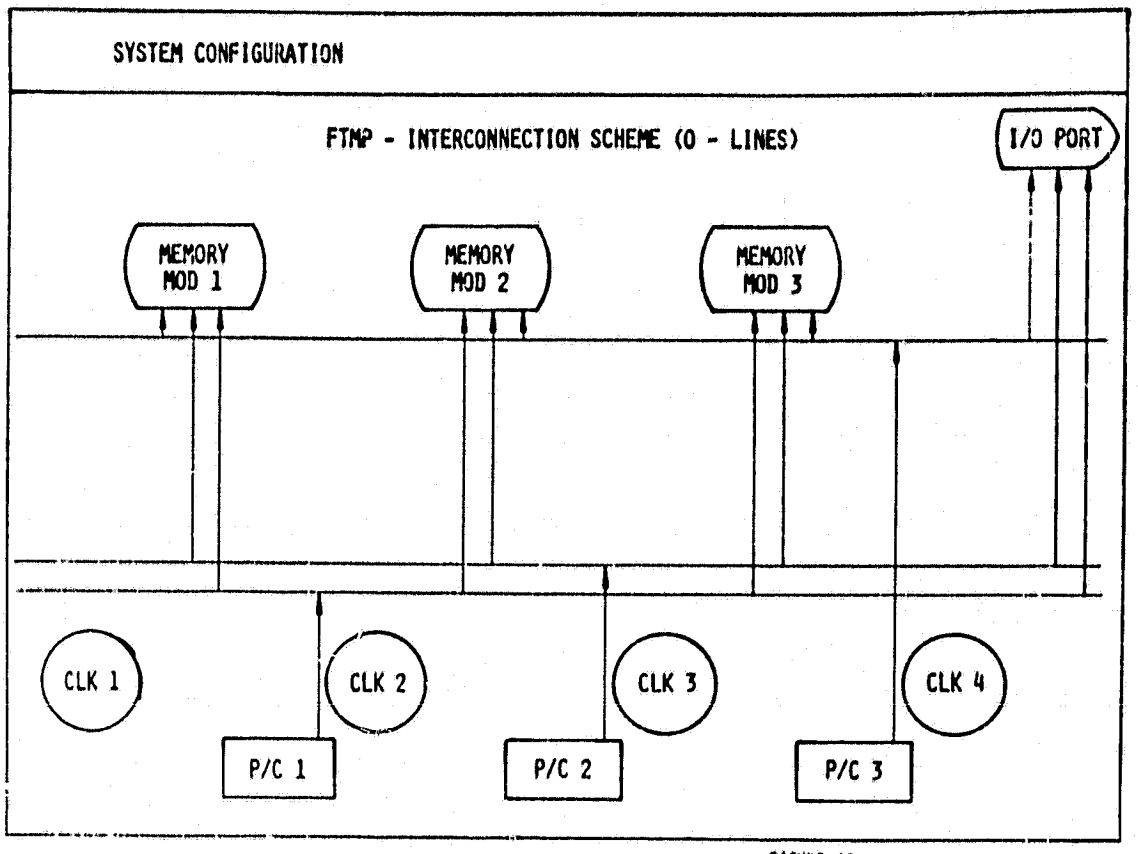

FIGURE 19

correct lines in the bus interface. The bus interface and the two BGU's are not reconfigurable and, thus, must control all data flow to and from the components in their LRU, no matter how these components are configured throughout the system.

3.2.1.2 FTMP Task Scheduling

Tasks are scheduled from the common task pool. Upon successful completion of a task, a processor triad executes the next available task from the pool. This task will be run to completion, without interrupts, unless system self testing or error recovery routines require reconfiguration of the task's particular triad.

ORIGINAL PAGE IS
OF POOR QUALITY

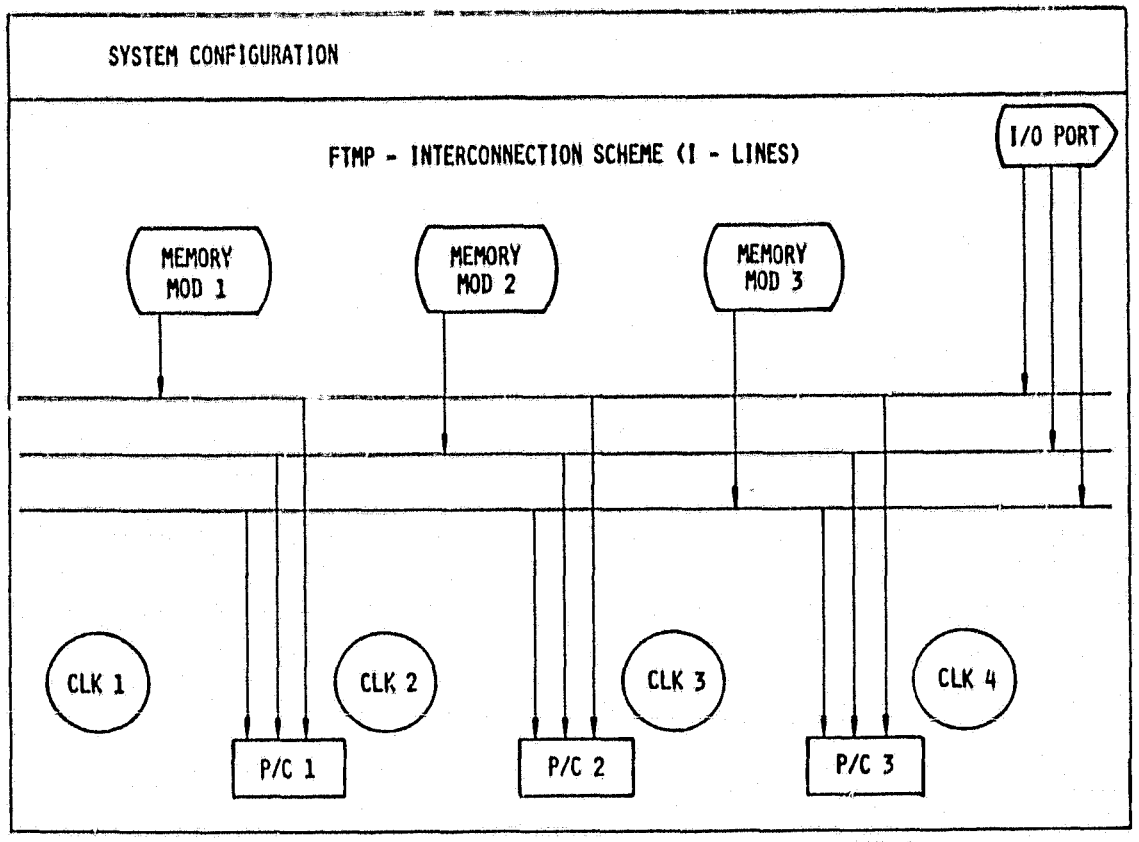

FIGURE 20

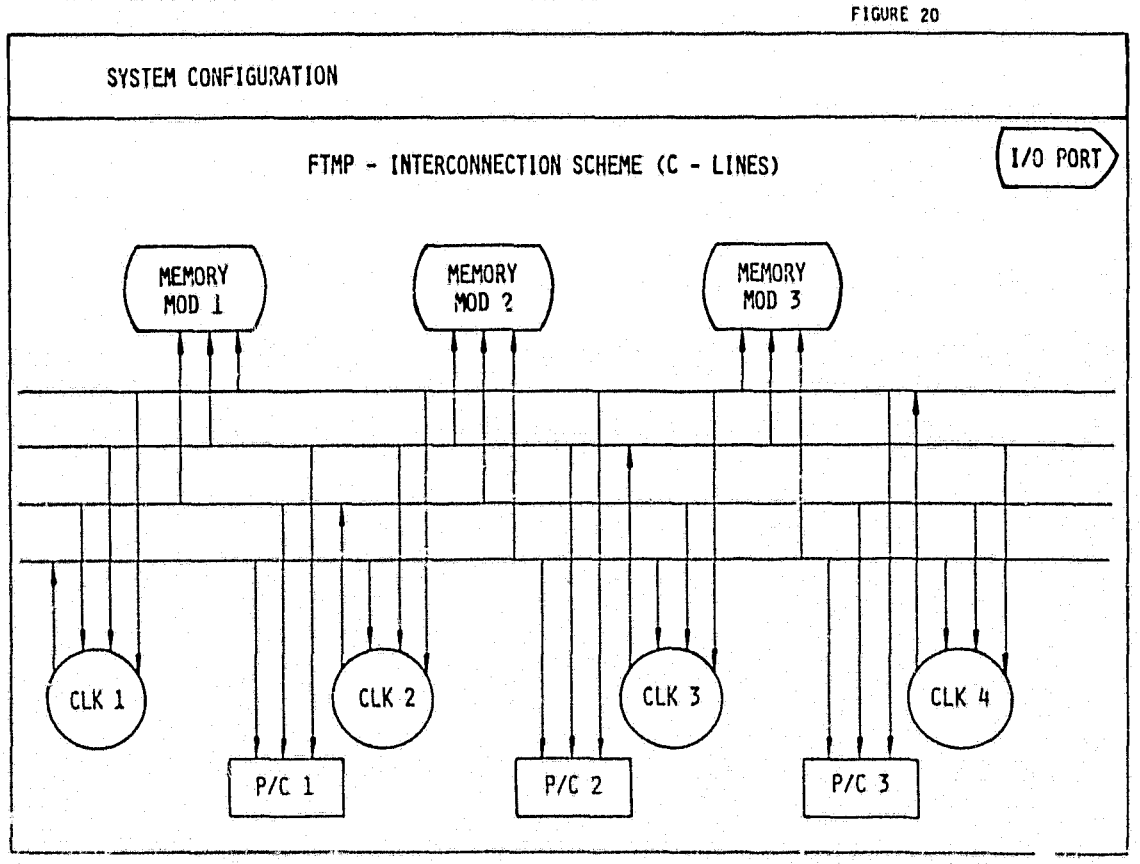

FIGURE 21

ORIGINAL PAGE IS
OF POOR QUALITY

3.2.2 FTMP Fault Recovery

Figures 22 and 23 demonstrate what steps the executive program would initiate in recovering from a faulty processor-to-memory data transmission. In this example, processor #1 of Triad A is failed and is the source of the erroneous data. The data disagreement is detected by the hardware voters associated with the destination main-memory modules (a triad). These voters will automatically set hardware error-latch registers, indicating which bus line the faulty data bit was transmitted on. The executive program periodically scans these registers and, if an error-latch is set, initiates reconfiguration. This reconfiguration consists of disassociating suspected data source modules from suspected data busses; further voting discrepancies will pinpoint the source of faulty data. In addition, an error table is kept which tabulates the number and rate of faults caused by each of the reconfigurable modules in the system. This table is used to determine when a unit should be considered failed and, therefore, be brought off-line.

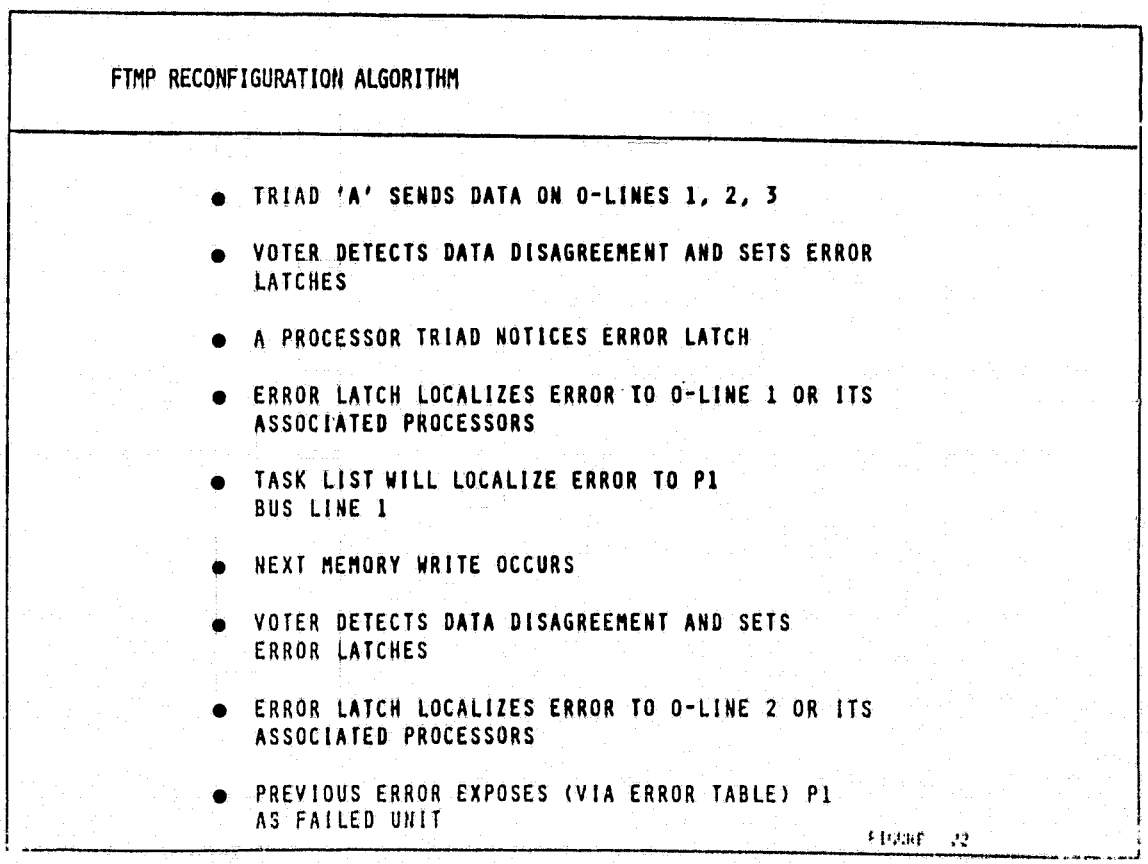

ORIGINAL PAGE IS
OF POOR QUALITY

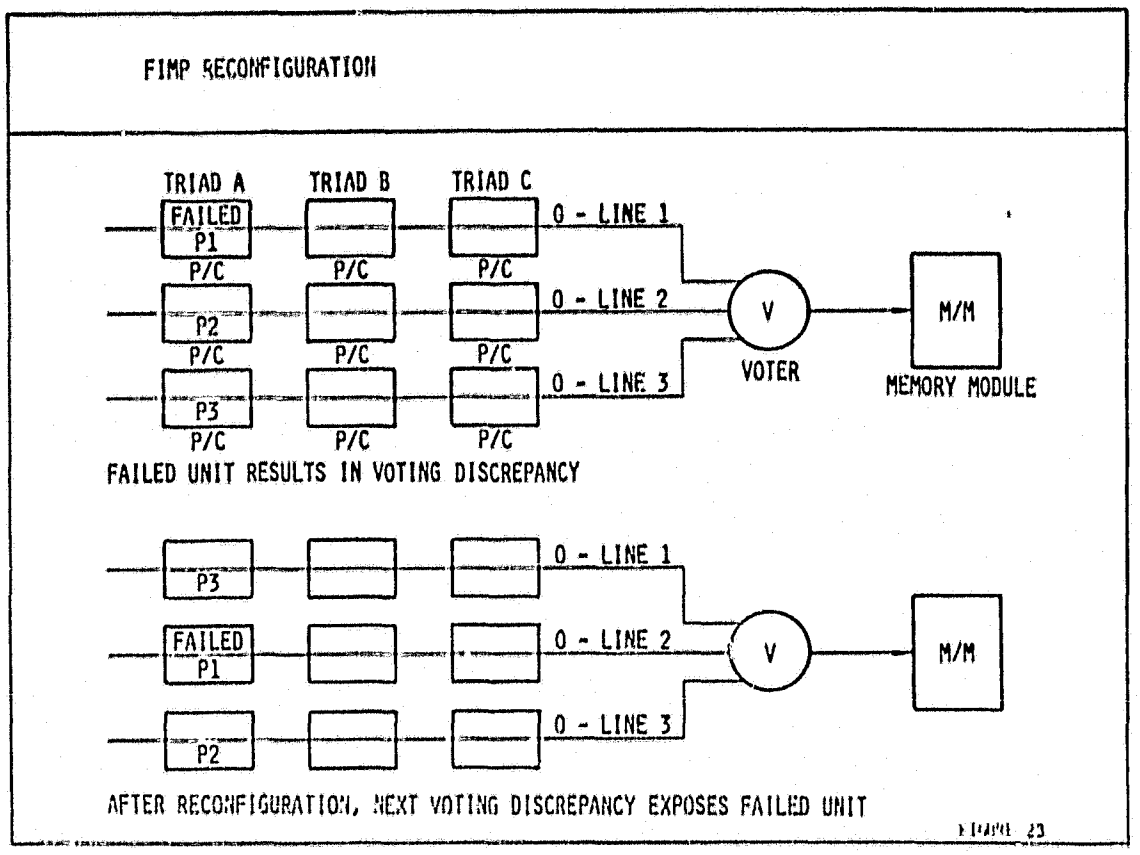

3.3 FTMP SYSTEM DEGRADATION

The executive is also responsible for graceful system degradation due to exhaustion of spares.

In the case of processor/cache modules, this entails dismantling one triple-redundant processor triad and designating its members as spares. This, of course, cannot be done if there is only one active triad. In this case, degradation consists of operating as a dual-redundant processor; further degradation will be catastrophic.

There is no graceful degradation of clock generators; if less than four clock generators are available, synchronization cannot be guaranteed. Less than four clocks can be used but the system will then be susceptible to catastrophic timing failures.

Because only one I/O port is necessary for system operation, up to nine failed ports can be tolerated. System performance will be degraded, however, in

that active processors and sensors will be competing for access to the remaining ports.

Memory page degradation consists of the following:

- Since page 3 is not necessary for system operation, it may be dismantled and its members used as spares without degrading performance.

- If a member of the 'page 1' triad fails, it must be replaced with a volatile spare and thus a degree of protection is lost.

- As page 1 and page 2 memory modules are not interchangeable, failure of more than four modules will result in dual redundant configuration of the affected page.

4.0 SIFT AND FTMP COMPARISONS

The choice of a software approach for voting and for other fault-tolerant mechanisms in the SIFT system leads to some fundamental operational differences from the essentially hardware based fault-tolerant mechamisms of the FTMP. In addition, each system has some design constraints (hardware and software) which limit or enhance its operational bounds, as well as serving to further differentiate the two systems. Several such features are noted, and their effects discussed, in the following two sections.

4.1 SIFT Software Approach

The use of non-specialized hardware along with a completely software based redundancy management scheme has several broad advantages.

- The first and most obvious advantage is the ability to use various computer architectures in the realization of a SIFT system. This is possible because, as a software system, SIFT is a concept relating various pieces of hardware rather than being the hardware itself.

- The use of a standard microcomputer as the main SIFT component results in a minimum number of reconfigurable parts. This has the dual advantage of providing more easily defined reconfiguration algorithms as well as resulting in a simpler, more reliable LRU.

- The loose synchronization employed in a SIFT means less processor to processor data transfers will occur. This should result in a somewhat lower incidence of data path errors.

- Finally, the system's flexibility is enhanced by its ability to dynamically control task redundancy.

There are also several disadvantages to SIFT's software approach, not the least of which being the complexity and the inherent non-provability of the software algorithms themselves. Also, while the loose synchronization employed in a SIFT does reduce the number of data transfers, it does not result in less critical long term timing constraints. Four clocks are needed to meet the loose 50 μsec synchronization - the same number as are required for the tight bit-by-bit synchronization of an FTMP. Finally, the use of one reconfigurable component type means that the failure of part of an LRU results in the loss of that whole LRU.

4.2 FTMP Hardware Approach

The advantages of an FTMP over a SIFT consist, mainly, of benefits gained by the several specially designed hardware devices and the functional discreteness of these components within an LRU.

For example, an FTMP can tolerate a number of failures in several LRU's without seriously degrading system performance. In particular, the ability to reconfigure sub-LRU components results in a complex combination of failed units being necessary to cause a whole LRU to be taken off line.

The tight synchronization employed in FTMP, in conjunction with bit-by-bit voting, exposes faults before they can have a widespread effect. This

feature and the nearly exclusive use of TMR have the additional effect of making the FTMP at least conceptually more defined and, thus, more easily provable.

There are, as well, several disadvantages to the FTMP approach. The number of reconfigurable modules and the interface complexity combine to form what may be a troublesome source of faults. This same component complexity is the source of a large amount of hidden software in FTMP. In fact, it is not clear that the reconfiguration and self test algorithms necessary to maintain the FTMP system integrity are any less complex and numerous than for the software based SIFT system.

The FTMP is susceptable to two types of electrical failures. As was mentioned previously, the heavy data transfers necessary for bit-by-bit voting of all results may itself be a source of data errors. Also, switching failures may be somewhat common due to the large amount of bus latching required for reconfiguration as well as from the switching and loading required to bring spare modules on and off line.

5.0 MAINTENANCE

Automatic digital test equipment, such as the RCA EQUATE, can be used on an FTMP or a SIFT for field repair of components at the integrated circuit level. This ability is enhanced by the fact that both systems employ a great degree of physical isolation of functional units. The stumbling block to field repair is the problem of recertification of the failed component's LRU once the repair has been made. Field recertification would involve exercising the repaired system with a complete set of application programs - a procedure which neither system is currently equipped to perform. The solution to this problem would be to have available at repair stations a permanent SIFT or FTMP into which repaired LRU's could be inserted for recertification. A complete set of application and system diagnostic tests could then be run on the SIFT or FTMP. The loading of the test programs and the evaluation of data would require the use of an external minicomputer system, most likely on the order of a DEC PDP 11/70.

It can be said, then, that an FTFCS system would be field repairable, but not without a considerable investment in digital test equipment and minicomputers.

An alternative repair procedure, which would eliminate the need for field repair, is that failed LRU's be returned to the manufacturers on a 'flat rate' exchange basis for repair and recertification. This policy would have to include stringent rules requiring a definite system defined failure before an LRU may be returned, thus avoiding an excessive repair shop flow as well as avoiding spurious failure rate data.

6.0 TRENDS

It is our judgement that SIFT or FTMP implementations, as comprehensive flight control processors, will not appear in commercial aircraft before 1985. In order for such systems to appear before that time, a crash program, motivated perhaps by energy conservation, to push it into the 757-767 series aircraft would have to be implemented. As the 757-767 flight control systems have already been specified without monolithic fault-tolerance, this is not too likely.

6.1 SIFT Trends

Changes in technology in the late 1980's will probably not affect SIFT conceptually if it proves practical in the first place. Cheaper memory and more powerful processors will, up to a point, create a potential for more powerful individual SIFT processors. Use of more than one SIFT system in tandem is a possibility. Complexity is a trap in SIFT because it requires proof of concept and implementation to achieve the reliabilities specified for the project. Hence, changes brought about by 1990 technology will be incorporated into SIFT if the inherent simplicity of the plan can be preserved.

One possible use of SIFT in the 1980-1990 period is as a rather cheap method, in terms of hardware, of implementing a redundant system. A microprocessor

based SIFT would be less expensive than many of the redundant microprocessor implementations which require fewer processors but more complicated interfaces, hardware voters, and built in configuration controllers or test hardware. Therefore, a SIFT might appear as a dedicated avionics computer, navigation computer, an active control system, engine controller, or ILS system, serving a narrower set of applications than those envisioned by the designers.

6.2 FTMP Trends

As with SIFT, late 1980's technology changes will probably not have a significant impact on the FTMP design concept. Changes that are likely to occur are in the areas of faster memories and processors, and smaller and more reliable components in general. (In fact, the FTMP LRU card count has been reduced during this study.) One possibility to be considered is that complete FTMP LRU's may, in the future, be reduced in size to a single printed circuit board or even a single integrated circuit chip. Integration of components beyond this level is unlikely as the concept of a separate, repairable LRU would be lost.

As with the SIFT, several FTMP's might be used as dedicated or parallel fault-tolerant systems; one concept under consideration is the use of a parallel pair of FTMP's connected by a Unibus-like data link.

However, unlike the SIFT system, the FTMP architecture is designed around a set of specialized hardware; hence, the ability to implement FTMP's using components other than the Collins Radio design is eliminated.

7.0 PERIPHERALS

An attempt has been made here to evaluate the effect of peripheral devices (sensors, actuators) on the operation or the reliability of either system.

The reliability of the various peripherals will, for a 'proven' SIFT or FTMP, be the determinating factor in whether a fault-tolerant flight control system does or does not meet the required system specifications. While it is the

ORIGINAL PAGE IS
OF POOR QUALITY

case that a standard fault-tolerant sensor/actuator configuration does not at this time exist, we believe that several present design trends will remain stable throughout the development of fault-tolerant active flight control systems. A few of these are:

- The continued use of standard avionics devices for sensors and actuators - It is believed that the duty cycle for sensors and actuators in fault-tolerant systems will not greatly exceed the present norm. In addition, the reliability figures for individual components are high enough to allow the continued use of 'off-the-shelf' units.

- The continued use of redundancy - Current designs for active controlled commercial aircraft make extensive use of redundancy at the actuator and sensor level. A novel variation on actuator redundancy is the Bendix dual mode actuator which operates both as a pneumatic and an electrical actuator. In the case of electrical or pneumatic signal failure, there is a smooth transition to single mode operation (Reference 7).

- The use of 'smart' devices - SIFT and FTMP are designed to perform sensor and actuator data voting within the central computer with the enhancement of mechanical voters at the actuator level. Full active control configured aircraft will probably employ some small processors at the sensor/actuator level to perform such tasks as reasonableness of data checks, voting, and, in certain cases, dedicated data processing.

8.0 ADDITIONAL SYSTEM DISCUSSIONS

As well as reviewing typical SIFT and FTMP concepts, two additional fault-tolerant computer designs were studied as example systems. The first, the AFTI-16 Digital Fly-by-Wire System is a TMR system designed

ORIGINAL PAGE IS
OF POOR QUALITY

by Bendix Corporation to replace the present F-16 Quad Analog FBW system. The second example system is a non-flight control redundant computer, the C.vmp multiprocessor.

8.1.0 AFTI-16

The AFTI-16 flight control computer is a TMR system employing no spares but including a final analog back-up system (Reference 9). The system is being designed so as not to rely on the back-up system; therefore, the following discussion will not include the analog components.

8.1.1 AFTI-16 System Description

From a system point of view, the AFTI-16 appears as in figure 24. Here, the system does not differ fundamentally from the SIFT or the FTMP; it is essentially a black-box computer interfacing sensors and actuators.

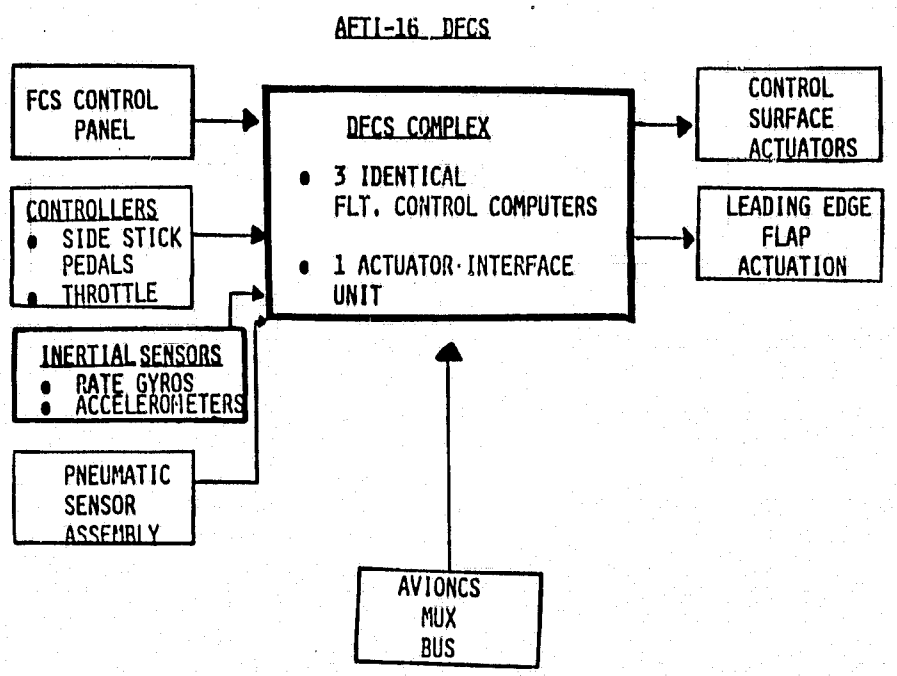

FIGURE 24

ORIGINAL PAGE IS
OF POOR QUALITY

The fault-tolerant nature of the AFTI-16 is revealed in figure 25. In this figure, it can be seen that the AFTI-16 shares many features with the SIFT system:

- Both operate mainly under TMR.
- Both communicate internally to write-only areas via broadcast busses.
- Both handle I/O (to sensors and actuators) via bus lines from each channel.
- Both have external 1553 data links--in the case of SIFT, for I/O; in the case of AFTI-16, for Fire Control communication.
- Both have only one reconfigurable module: a combination of Processor, Memory, and I/O Port.

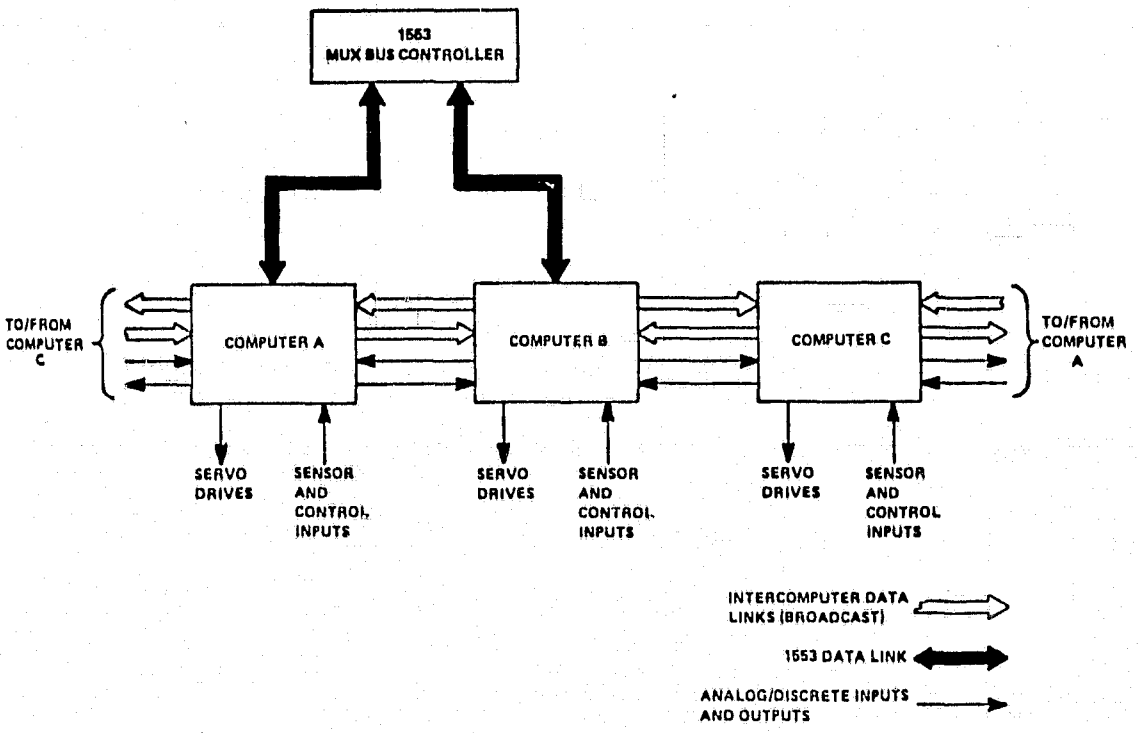

SYSTEM ARCHITECTURE
TRIPLE REDUNDANT SYSTEM

FIGURE 25

ORIGINAL PAGE IS
OF POOR QUALITY

The fundamental differences between a SIFT and an AFTI-16 are the number and thus the configuration of reconfigurable modules, the varying redundancy of tasks, and the difference in overall complexity. The AFTI-16 relies on three processor modules with software voting of outputs but incorporates no spares or multiple channels. Because of the lack of spares, reconfiguration consists of system degradation, i.e., dropping of processor modules. System degradation occurs after even one failure, the result being a dual redundant system. The second failure is tolerated by software 'reasonableness of data' tests to determine which of the two active modules is failed. In addition, there is the aforementioned analog back-up system; this back-up is not considered in the manufacturer's analysis of system reliability and therefore is not considered necessary for the probability of a successful mission to be within the accepted bounds.

8.1.2 AFTI-16 Component Characteristics

A fully configured AFTI-16 flight control computer system consists of three reconfigurable Flight Control Computers (FLCC's) and one non-reconfigurable Actuator Interface Unit (AIU). (The purpose of the AIU is to interface the FLCC's with the set of nonredundant actuators.) The AFTI-16 FLCC is built around the BDX 930 processor, another feature shared by the SIFT system.

Figure 26 contains the characteristics of the AFTI-16 reconfigurable module, the FLCC

8.2.0 COMPUTER-VOTED MULTIPROCESSOR (C.vmp)

The C.vmp had as a design motivation industrial applications where availability, inexperienced users, variable criticality of tasks, and throughput needs are prime considerations (Reference 10).

8.2.1 C.vmp System Overview

Figure 27 shows the system view of the C.vmp. Three processors are connected, via parallel-bit bus lines, to three memories and three disk drives. The processors may run as three separate channels for maximum throughput (communicating via Parallel Line Units), or they may be switched, by operator or program control, into one TMR channel with voting performed

AFTI-16 FLCC Characteristics

- Component size
  - Dimensions: 16.00" x 8.1" x 4.88"
  - Weight: 14 pounds
- Environment: Forward Avionics Compartment
- Power Requirements: Dual Redundant 28 Volt Line W/24 V Battery Back-Up
- Estimated MTBF: 2200 hr MTBF
- Interconnections: Broadcast/Write Only Interface to Two Other FLCC's
- Cost: $36,000
- Throughput: 500 KOPS Gibson Mix-Raw
- Inputs: Analog Sensor Lines
- Outputs: Analog Sensor Lines

- Minimum Complement: One
- Standard Complement: 3
- Maximum Complement: 3

Figure 26

(by V in figure 27) on all data transfers to and from memory. Figure 28 shows the bus lines and multiplexing units necessary to accomplish parallel or triad (voted) processing and data transfers.

System degradation, in the event of hard failures, consists of dropping failed channels and switching to parallel processor mode.

8.2.2 C.vmp Hardware

The reconfigurable module in the C.vmp system is the processor/memory module. The voter is not reconfigurable. The processor is a DEC LSI-11 microcomputer with seven 4K RAM memories per processor. Figure 29 gives the characteristics of the C.vmp processor/memory.

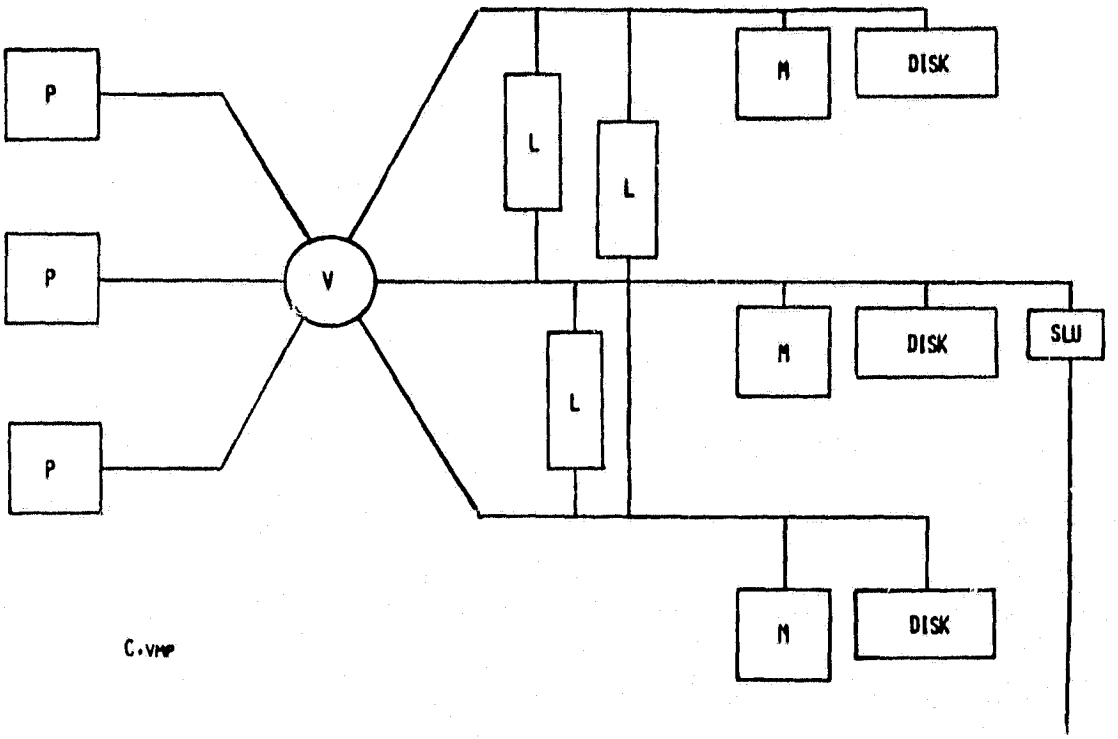

FIGURE 27

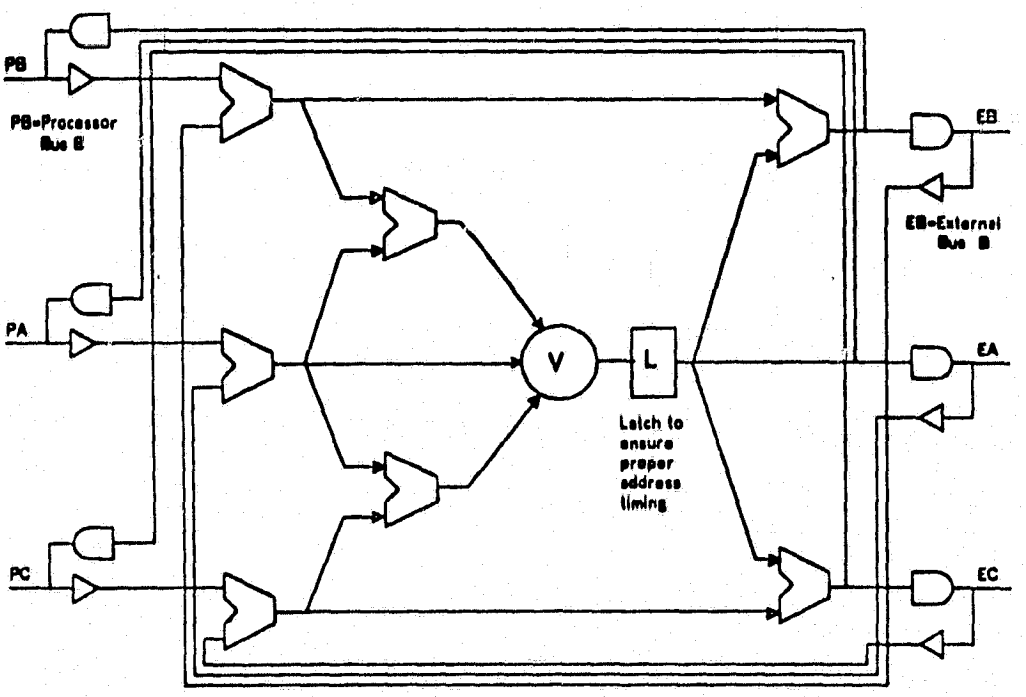

FIGURE 28

ORIGINAL PAGE IS
OF POOR QUALITY

ORIGINAL PAGE IS
OF POOR QUALITY

C.VMP PROCESSOR

- Size: Quad Height Board
- Environment: Control Room
- Power Requirements: 14 amps
- Physical Interconnections: DEC LSI-11 QBUS, Interface to two other processors, voter, and disk drive
- Reliability: 7,000 hours MTBF
- Cost: $2,500
- Throughput: 250 KOPS
- Input: Parallel Bit, Voted DEC LSI-11 QBUS
- Output: Parallel Bit, Voted DEC LSI-11 QBUS

- Complement: 3
- Minimum Complement: 1

FIGURE 29

9.0 REFERENCES

1. Wensley, J. H. et al, "Design of a Fault Tolerant Airborne Digital Computer, Volume I - Architecture", Final Report NASA Contract NAS1-10920, October 1973.

2. Ratner, R.S. et al, "Design of a Fault Tolerant Airborne Digital Computer, Volume II - Computational Requirements and Technology", Final Report NASA Contract NAS1-10920, October 1973.

3. Avizienis, A., "Fault-tolerant Computing - Progress, Problems and Prospects," Proc. 1FIP Congress 1977, Toronto, Canada pp 405-420.

4. Wensley, J. H. et al, "SIFT: Design and Analysis of a Fault-Tolerant Computer for Aircraft Control", Proceedings of the IEEE, Vol 66, No. 10, October 1978, p 1240-1255.

5. Forman, P. et al, "Multiprocessor Architecture for (SIFT) Flight Control and Avionics Computer", Abstract, Bendix Corporation, Flight Systems Division, Teterboro, New Jersey, March 1979.

6. F.A.A. Certification Regulations Information Circular; Part 25; Para. 671, 672, 1309, 1435.

7. R. E. Feucht, P. Forman, R. Krehley, "Advanced Flight Control Actuation System (AFACS-E-P)". MADC-77001-60, Bendix Corporation, June 1978.

8. Hopkins, A. L. et al, "FTMP - A Highly Reliable Fault-Tolerant Multiprocessor for Aircraft", Proceedings of the IEEE, Vol 66, No. 10, October 1978, pp 1221-1239.

9. AFTI-16 Digital Fly-by-Wire System Technical Overview, Bendix Co. Flight Systems Division, May 24, 1979.

10. Siewiorek,D. P. et al, Reliability of Multiprocessor Systems: A Case Study of C.mmp, Cm* and C.vmp, Department of Computer Science, Carnegie-Mellon University, Document No. CMU-CS-78-143, pp 39-69.

ORIGINAL PAGE IS
OF POOR QUALITY

APPENDIX VII

REPAIR SHOP SIMULATION

This appendix contains details of a typical repair shop simulation that was developed to gain experience with SIMSCRIPT programming and to form a part of the Phase II CBDOM program.

The data flow diagram illustrates the processes performed and the interfaces between various processes. On the data flow diagram:

Circles: represent SIMSCRIPT PROCESSES, EVENTS, or ROUTINES

Arrows: represents jobs flowing through the system

═══ : represent files or storage areas

A sample program execution and a listing of repair shop codes also are provided.

ORIGINAL PAGE IS
OF POOR QUALITY

AVIONICS REPAIR SHOP SIMULATION
DATA FLOW DIAGRAM

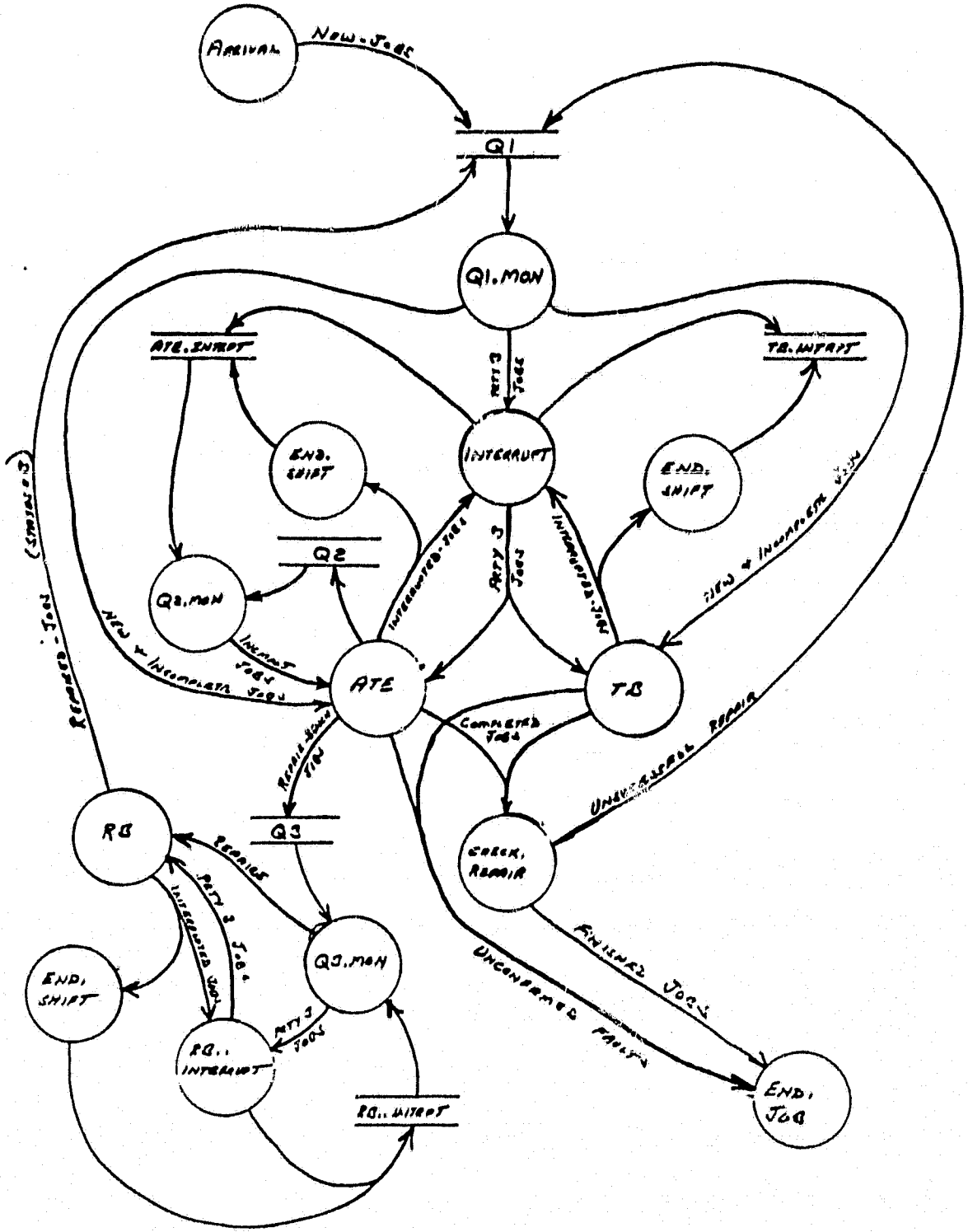

SAMPLE REPAIR SHOP SIMULATION RUN

```
dslgo
1      AVIONICS JOB SHOP SIMULATION

   INPUT NUMBER OF ATE, REPAIR BENCHES, AND TEST BENCHES
I>2 2 2
   INPUT K1, K2, K3, K4, AND K5
I>30 30 30 30 30
   INPUT RUN TIME IN DAYS
I>60
   INPUT 18 EQUIPMENT TYPES (1=ATE,2=TB,3=EITHER)
I>1 1 1 1 1 1 2 2 2 2 2 2 3 3 3 3 3 3
   INPUT MEAN NUMBER OF ARRIVALS PER DAY
I>2
   INPUT PROB. FAULTS CONFIRMED,  PROB. REPAIR IS GOOD
I>.9 .9
   INPUT RANDOM STEP VARIABLES (TERMINATE WITH ASTERISKS)
     INPUT COMPONENT TYPE DISTR.
I>.1 1 .1 3 .1 5 .1 7 .1 9 .1 11 .1 13 .1 15
I>.2 18 *
     INPUT PRIORITY DISTRIBUTION
I>.8 1 .2 3 *
     INPUT EQ.TYPE DIST. FOR COMPONENT TYPE 18
I>.4 1 .4 2 .2 3 *
   TRACE OPTION ? (YES OR NO)
I>no
   LIST INPUT DATA ? (YES OR NO)
I>yes
```

ORIGINAL PAGE IS
OF POOR QUALITY

ORIGINAL PAGE IS
OF POOR QUALITY

SAMPLE OF OUTPUT FOR REPAIR SHOP SIMULATION

```
NUMBER OF
  ATE =    2
  RB  =    2
  TB  =    2

K1 -  MAX P3 DELAY TIME BEFORE INTERRUPT OF ATE =    30 MIN
K2 -  MAX P3 DELAY TIME BEFORE INTERRUPT OF TB  =    30 MIN
K3 -  MAX OVERTIME AUTHORIZED FOR ACTIVE JOBS   =    30 MIN
K4 -  MAX TIME FOR REPAIR AT ATE                =    30 MIN
K5 -  MAX TIME FOR POST REPAIR TEST AT ATE      =    30 MIN
```

COMPONENT	EQ. TYPE	COMPONENT	EQ.TYPE	COMPONENT	EQ.TYPE
1	1	2	1	3	1
4	1	5	1	6	1
7	2	8	2	9	2
10	2	11	2	12	2
13	3	14	3	15	3
16	3	17	3	18	3

MEAN INTERARRIVAL TIME = 12.00 HOURS

PROB. FAULT CONFIRMED = .90 PROB. FAULT REPAIRED = .90

DISTRIBUTION OF COMPONENT TYPES (CUM)

PROBABILITY	TYPE
.10	1
.20	3
.30	5
.40	7
.50	9
.60	11
.70	13
.80	15
1.00	18

DISTRIBUTION OF PRIORITIES (CUM)

PROBABILITY	PRIORITY
.80	1
1.00	3

DISTRIBUTION OF EQ.TYPE FOR COMPONENT TYPE 18

PROBABILITY	EQ.TYPE
.40	1
.80	2
1.00	3

ORIGINAL PAGE IS
OF POOR QUALITY

SIMULATION ENDED AT 60- 0: 0 NO. JOBS = 100

1

HISTOGRAM OF THROUGHPUT TIMES BY COMPONENT TYPE

COMPONENT TYPE HOURS	1	2	3	4	5	6	7	8	9
4	0	0	0	0	1	0	0	0	0
8	0	0	1	0	1	0	0	0	0
12	1	0	0	0	0	0	0	0	0
16	1	0	3	0	2	0	0	0	0
20	1	0	0	0	1	0	0	0	0
24	1	0	1	0	1	0	0	0	0
28	0	0	1	0	0	0	0	0	0
32	0	0	0	0	0	0	0	0	1
36	0	0	2	0	0	0	0	0	0
40	0	0	1	0	0	0	0	0	1
44	0	0	0	0	1	0	0	0	0
48	0	0	1	0	2	0	0	0	1
52	1	0	0	0	0	0	0	0	0
56	0	0	0	0	1	0	0	0	0
60	0	0	2	0	0	0	0	0	0
64	1	0	0	0	1	0	0	0	0
68	0	0	0	0	0	0	0	0	0
72	0	0	1	0	0	0	0	0	0
76	0	0	0	0	0	0	2	0	0
80	0	0	0	0	0	0	0	0	0
84	0	0	0	0	0	0	0	0	0
88	1	0	0	0	0	0	0	0	0
92	0	0	0	0	1	0	1	0	0
96	0	0	0	0	0	0	1	0	0
100	0	0	0	0	0	0	3	0	4
AVERAGE	37.4	0.	33.0	0.	34.5	0.	122.4	0.	120.2
VARIANCE	689.7	0.	369.6	0.	642.6	0.	2202.4	0.	5180.0
MAXIMUM	86.2	0.	68.0	0.	88.1	0.	188.8	0.	195.8
NUMBER	7	0	13	0	12	0	7	0	7

ORIGINAL PAGE IS
OF POOR QUALITY

HISTOGRAM OF THROUGHPUT TIMES BY COMPONENT TYPE

COMPONENT TYPE HOURS	10	11	12	13	14	15	16	17	18
4	0	0	0	1	0	0	0	0	1
8	0	0	0	1	0	1	0	0	0
12	0	0	0	1	0	1	0	0	1
16	0	0	0	1	0	0	0	0	1
20	0	1	0	4	0	1	0	0	0
24	0	0	0	4	0	2	0	0	0
28	0	0	0	2	0	0	0	0	0
32	0	0	0	0	0	0	0	0	1
36	0	2	0	1	0	0	0	0	0
40	0	0	0	0	0	2	0	0	1
44	0	0	0	0	0	1	0	0	1
48	0	1	0	0	0	0	0	0	0
52	0	0	0	0	0	0	0	0	1
56	0	0	0	0	0	0	0	0	0
60	0	1	0	0	0	0	0	0	1
64	0	0	0	1	0	0	0	0	0
68	0	1	0	0	0	0	0	0	0
72	0	0	0	0	0	0	0	0	1
76	0	0	0	0	0	0	0	0	0
80	0	0	0	0	0	0	0	0	0
84	0	1	0	0	0	0	0	0	1
88	0	0	0	0	0	0	0	0	0
92	0	0	0	0	0	1	0	0	0
96	0	0	0	0	0	0	0	0	0
100	0	7	0	0	0	0	0	0	7
AVERAGE	0.	114.3	0.	21.5	0.	31.6	0.	0.	84.5
VARIANCE	0.	7605.0	0.	171.0	0.	560.7	0.	0.	3874.7
MAXIMUM	0.	337.9	0.	63.9	0.	88.4	0.	0.	203.9
NUMBER	0	14	0	16	0	9	0	0	17

1

ORIGINAL PAGE IS
OF POOR QUALITY

HISTOGRAM OF MANHOURS BY COMPONENT TYPE

COMPONENT TYPE	1	2	3	4	5	6	7	8	9
HOURS									
2	1	0	0	0	2	0	0	0	0
4	0	0	1	0	1	0	0	0	0
6	4	0	6	0	6	0	0	0	0
8	2	0	6	0	3	0	0	0	0
10	0	0	0	0	0	0	0	0	2
12	0	0	0	0	0	0	1	0	0
14	0	0	0	0	0	0	1	0	2
16	0	0	0	0	0	0	3	0	1
18	0	0	0	0	0	0	0	0	0
20	0	0	0	0	0	0	1	0	1
22	0	0	0	0	0	0	0	0	0
24	0	0	0	0	0	0	0	0	1
26	0	0	0	0	0	0	1	0	0
AVERAGE	5.0	0.	5.6	0.	4.6	0.	16.4	0.	14.3
VARIANCE	2.2	0.	1.6	0.	4.1	0.	18.2	0.	20.7
MAXIMUM	6.4	0.	7.5	0.	7.3	0.	25.7	0.	23.0
NUMBER	7	0	13	0	12	0	7	0	7

HISTOGRAM OF MANHOURS BY COMPONENT TYPE

COMPONENT TYPE	10	11	12	13	14	15	16	17	18
HOURS									
2	0	0	0	0	0	0	0	0	1
4	0	0	0	1	0	1	0	0	1
6	0	1	0	9	0	4	0	0	1
8	0	0	0	6	0	4	0	0	3
10	0	1	0	0	0	0	0	0	3
12	0	2	0	0	0	0	0	0	0
14	0	3	0	0	0	0	0	0	4
16	0	1	0	0	0	0	0	0	1
18	0	1	0	0	0	0	0	0	2
20	0	1	0	0	0	0	0	0	0
22	0	2	0	0	0	0	0	0	1
24	0	0	0	0	0	0	0	0	0
26	0	1	0	0	0	0	0	0	0
AVERAGE	0.	15.8	0.	5.8	0.	5.5	0.	0.	10.6
VARIANCE	0.	34.1	0.	1.4	0.	1.6	0.	0.	27.0
MAXIMUM	0.	26.0	0.	7.5	0.	7.2	0.	0.	21.5
NUMBER	0	14	0	16	0	9	0	0	17

ORIGINAL PAGE IS
OF POOR QUALITY

REPAIR SHOP SIMSCRIPT PROGRAM CODE

```
'' PGM -

'' TITLE : AVIONICS JOB SHOP SIMULATION

''   ANALYST : DAN STREIFFERT
''             G-4420

''   ENGINEER : JOHN ROSE

'' DATE : AUGUST,1979

'' ABSTRACT :

'' THE REPAIR SHOP MODEL SIMULATES THE TEST AND REPAIR OF THE
'' AVIONIC EQUIPMENT USED ABOARD AN AIRLINE'S FLEET.  TWO TYPES
'' OF TEST EQUIPMENT ARE EMPLOYED BY THE REPAIR SHOP, AUTOMATIC
'' TEST EQUIPMENT (ATE) AND A MANUAL TEST BENCH (TB).  INPUT TO
'' THE MODEL SPECIFIES WHICH TYPE OF TEST EQUIPMENT IS REQUIRED
'' BY EACH COMPONENT.  A REPAIR PRIORITY IS USED TO INFLUENCE THE
'' COMPONENTS FLOW THROUGH THE REPAIR SHOP.  THE MODEL OPERATES
'' ONE SHIFT PER 5 - DAY WORK WEEK.  OVERTIME LABOR IS ALLOCATED
'' TO ALLEVIATE REPAIR BACKLOG.
```

ORIGINAL PAGE IS
OF POOR QUALITY

```
PREAMBLE
  NORMALLY MODE IS REAL

  PROCESSES INCLUDE
    ARRIVAL
    AND SHIFT.CHANGE
    EVERY ATE       ''AUTOMATIC TEST EQUIPMENT
      HAS A JOB.ATE      '' JOB CAUSING
      AND MAY BELONG TO THE ATE.INTERRUPT
    EVERY RB        ''REPAIR BENCH
      HAS A JOB.RB       '' JOB CAUSING
      AND MAY BELONG TO THE RB.INTERRUPT
    EVERY TB        ''TEST BENCH
      HAS A JOB.TB       '' JOB CAUSING
      AND MAY BELONG TO THE TB.INTERRUPT
    DEFINE JOB.ATE, JOB.RB, AND JOB.TB AS INTEGER VARIABLES

  EVENT NOTICES INCLUDE
    Q1.MON,
    Q2.MON,
    Q3.MON,
    SIM.END,
    AND END.SHIFT
    EVERY END.JOB HAS A JOB.END
    DEFINE JOB.END AS AN INTEGER VARIABLE

  TEMPORARY ENTITIES
    EVERY JOB HAS
      A NUMBER,          ''ARRIVAL NUMBER
      A TYPE,            ''COMPONENT TYPE (1-18)
      AN EQ.TYPE,        ''EQUIPMENT TYPE (1=ATE, 2=TB, 3=BOTH)
      A PRTY,            ''1,2, OR 3
      A RANK,            ''FOR Q2
      A TM.PRE.REPAIR,      ''MINUTES
      A TM.REPAIR,
      A TM.POST.REPAIR,
      A STATUS,          ''1=PRE.REPAIR, 2=REPAIR, 3=POST.REPAIR
      A START.TIME,
      MAY BELONG TO THE Q1,
      MAY BELONG TO THE Q2,
      MAY BELONG TO THE Q3

  THE SYSTEM OWNS A Q1, A Q2, AND A Q3
    DEFINE Q1 AS A SET RANKED BY HIGH PRTY
    DEFINE Q2 AS A SET RANKED BY HIGH RANK
    DEFINE Q3 AS A SET RANKED BY HIGH PRTY

  THE SYSTEM OWNS A ATE.INTERRUPT, A RB.INTERRUPT, AND A TB.INTERRUPT
    DEFINE ATE.INTERRUPT AS A LIFO SET
    DEFINE RB.INTERRUPT AS A LIFO SET
    DEFINE TB.INTERRUPT AS A LIFO SET
  DEFINE END.TIME AS A REAL VARIABLE
```

```
DEFINE SHIFT AS AN INTEGER VARIABLE  ''0=OVER, 1=ON

DEFINE
  CHECK.PROB,    ''PROB. FAULT CONFIRMED
  REPAIR.PROB    ''PROB. FAULT REPAIRED
  AS REAL VARIABLES

DEFINE NO.ATE, NO.RB, AND NO.TB AS INTEGER VARIABLES

DEFINE NO.ARRIVALS AS AN INTEGER VARIABLE

GENERATE LIST ROUTINES
DEFINE
  K1,    '' MAX P3 DELAY TIME BEFORE INTERRUPT OF ATE
  K2,    '' MAX P3 DELAY TIME BEFORE INTERRUPT OF TEST BENCH
  K3,    '' MAX OVERTIME AUTHORIZED FOR ACTIVE JOBS
  K4,    '' MAX TIME FOR REPAIR AT ATE
  K5     '' MAX TIME FOR IMMEDIATE POST REPAIR TEST AT ATE
  AS INTEGER VARIABLES   '' ALL IN MINUTES

DEFINE CTIME TO MEAN NDAY.F(TIME.V),HOUR.F(TIME.V),MINUTE.F(TIME.V)

PRIORITY ORDER IS
  END.JOB,
  SIM.END,
  ATE,
  RB,
  TB,
  SHIFT.CHANGE,
  ARRIVAL,
  END.SHIFT,
  Q3.MON,
  Q2.MON,
  Q1.MON

PERMANENT ENTITIES
  EVERY STATISTIC      ''ARRAYS FOR TALLY STATISTICS
    HAS A MNHRS
    AND A THRPT

TALLY      ''THROUGHPUT TIME
  NO.THRPT AS THE NUMBER,
  AV.THRPT AS THE AVERAGE,
  VA.THRPT AS THE VARIANCE,
  MX.THRPT AS THE MAXIMUM,
  HS.THRPT(0 TO 96 BY 4) AS THE HISTOGRAM
  OF THRPT

TALLY      ''MANHOURS
  NO.MNHRS AS THE NUMBER,
  AV.MNHRS AS THE AVERAGE,
  VA.MNHRS AS THE VARIANCE,
  MX.MNHRS AS THE MAXIMUM,
  HS.MNHRS(0 TO 48 BY 2) AS THE HISTOGRAM
  OF MNHRS
```


ORIGINAL PAGE IS
OF POOR QUALITY

```
  DEFINE CO.EQ.TYPE AS A 1-DIMENSIONAL ARRAY    ''EQ.TYPE BY COMPONENT
TYPE

  THE SYSTEM HAS A RN.TYPE RANDOM STEP VARIABLE  ''COMP. TYPE DIST.
  THE SYSTEM HAS A RN.PRTY RANDOM STEP VARIABLE  ''PRTY DISTR.
  THE SYSTEM HAS A RN.18   RANDOM STEP VARIABLE  ''EQ.TYPE DIST FOR TY
PE 18
  DEFINE RN.TYPE, RN.PRTY, AND RN.18 AS REAL VARIABLES

  DEFINE MIAT AS A REAL VARIABLE  ''MEAN INTERARRIVAL TIME (HOURS)
END
```

ORIGINAL PAGE IS
OF POOR QUALITY

```
  MAIN
    NOW INITIALIZE
    CALL INPUT
    ACTIVATE AN ARRIVAL IN 8 HOURS
    ACTIVATE A SHIFT.CHANGE IN 8 HOURS
    ACTIVATE AN SIM.END IN END.TIME DAYS
    START SIMULATION
  END



ROUTINE TO INITIALIZE

  CREATE EACH STATISTIC(18)
  RESERVE CO.EQ.TYPE AS 18
  LET LINES.V = 100000

END



ROUTINE TO SET.PARM GIVEN JOB.PARM

  '' THIS ROUTINE INITIALIZES JOBS ENTERING THE REPAIR SHOP.

  DEFINE JOB.PARM AS AN INTEGER VARIABLE
  LET STATUSJOB.PARM) = 1   'PR.RPAR
END
```

ORIGINAL PAGE IS
OF POOR QUALITY

ORIGINAL PAGE IS
OF POOR QUALITY

```
ROUTINE FOR INPUT

  DEFINE ANS AS AN ALPHA VARIABLE

  PRINT 2 LINES THUS
     AVIONICS JOB SHOP SIMULATION

  PRINT 1 LINE THUS
  INPUT NUMBER OF ATE, REPAIR BENCHES, AND TEST BENCHES
  READ NO.ATE, NO.RB, AND NO.TB
  PRINT 1 LINE THUS
  INPUT K1, K2, K3, K4, AND K5
  READ K1, K2, K3, K4, AND K5
  PRINT 1 LINE THUS
  INPUT RUN TIME IN DAYS
  READ END.TIME
  PRINT 1 LINE THUS
  INPUT 18 EQUIPMENT TYPES (1=ATE,2=TB,3=EITHER)
  READ CO.EQ.TYPE
  PRINT 1 LINE THUS
  INPUT MEAN NUMBER OF ARRIVALS PER DAY
  READ MIAT
  LET MIAT = 24./MIAT  ''INTERARRIVAL TIME
  PRINT 1 LINE THUS
  INPUT PROB. FAULTS CONFIRMED,  PROB. REPAIR IS GOOD
  READ CHECK.PROB, REPAIR.PROB
  PRINT 1 LINE THUS
  INPUT RANDOM STEP VARIABLES (TERMINATE WITH ASTERISKS)
  PRINT 1 LINE THUS
    INPUT COMPONENT TYPE DISTR.
    READ RN.TYPE
  PRINT 1 LINE THUS
    INPUT PRIORITY DISTRIBUTION
    READ RN.PRTY
  PRINT 1 LINE THUS
    INPUT EQ.TYPE DIST. FOR COMPONENT TYPE 18
    READ RN.18
  PRINT 1 LINES THUS
  TRACE OPTION ? (YES OR NO)
  READ ANS
  IF ANS = "YES"
    LET BETWEEN.V = 'TRACE'
  ALWAYS
  PRINT 1 LINE THUS
  LIST INPUT DATA ? (YES OR NO)
  READ ANS
  IF ANS = "YES"
    CALL PR.INPUT
  ALWAYS
END
```

ORIGINAL PAGE IS
OF POOR QUALITY

```
ROUTINE TO PR.INPUT

  DEFINE I AS AN INTEGER VARIABLE

  PRINT 4 LINES WITH NO.ATE, NO.RB, AND NO.TB
    THUS
  NUMBER OF
    ATE =     *
    RB  =     *
    TB  =     *
  SKIP 1 LINE
  PRINT 5 LINES WITH K1,K2,K3,K4 AND K5
    THUS
  K1 -  MAX P3 DELAY TIME BEFORE INTERRUPT OF ATE =     * MIN
  K2 -  MAX P3 DELAY TIME BEFORE INTERRUPT OF TB  =     * MIN
  K3 -  MAX OVERTIME AUTHORIZED FOR ACTIVE JOBS   =     * MIN
  K4 -  MAX TIME FOR REPAIR AT ATE                =     * MIN
  K5 -  MAX TIME FOR POST REPAIR TEST AT ATE      =     * MIN
  SKIP 2 LINES
  PRINT 2 LINES THUS
  COMPONENT  EQ. TYPE   COMPONENT  EQ.TYPE   COMPONENT  EQ.TYPE
  ---------  --------   ---------  -------   ---------  -------
  FOR I = 1 TO 16 BY 3
    PRINT 1 LINE WITH I, CO.EQ.TYPE(I), I+1, CO.EQ.TYPE(I+1),
          I+2, CO.EQ.TYPE(I+2)  THUS
          *          *          *          *          *          *
  SKIP 2 LINES
  PRINT 1 LINE WITH MIAT THUS
  MEAN INTERARRIVAL TIME =     *.** HOURS
  SKIP 1 LINE
  PRINT 1 LINE WITH CHECK.PROB AND REPAIR.PROB THUS
  PROB. FAULT CONFIRMED = .**   PROB. FAULT REPAIRED = .**
  SKIP 2 LINES
  PRINT 3 LINES THUS
  DISTRIBUTION OF COMPONENT TYPES (CUM)
    PROBABILITY  TYPE
    -----------  ----
  FOR EACH RANDOM.E IN RN.TYPE
    PRINT 1 LINE WITH PROB.A AND RVALUE.A THUS
          *.**     *
  SKIP 2 LINES
  PRINT 3 LINES THUS
  DISTRIBUTION OF PRIORITIES (CUM)
    PROBABILITY  PRIORITY
    -----------  --------
  FOR EACH RANDOM.E IN RN.PRTY
    PRINT 1 LINE WITH PROB.A AND RVALUE.A THUS
          *.**         *
  SKIP  2 LINES
  PRINT 3 LINES THUS
  DISTRIBUTION OF EQ.TYPE FOR COMPONENT TYPE 18
    PROBABILITY  EQ.TYPE
    -----------  -------
  FOR EACH RANDOM.E IN RN.18
    PRINT 1 LINE WITH PROB.A AND RVALUE.A THUS
          *.**        *
END
```

ORIGINAL PAGE IS
OF POOR QUALITY

```
PROCESS ARRIVAL

  '' THIS PROCESS GENERATES REPAIR JOBS AT EXPONENTIALY DISTRIBUTED
  '' INTERARRIVAL TIMES.  JOBS ARE ASSIGNED INITIAL PARAMETERS,
  '' FILED IN Q1, AND INITIATED IF POSSIBLE.

  DEFINE WAIT.TM AS A REAL VARIABLE

  UNTIL TIME.V GT END.TIME
    DO
    'RECOMP'
    LET WAIT.TM = EXPONENTIAL.F(MIAT,4)
    IF WAIT.TM GT 8.*MIAT  ''TRUNC. EXPON.
      GO TO RECOMP
    ELSE
    WAIT WAIT.TM HOURS
    ADD 1 TO NO.ARRIVALS
    CREATE A JOB
    LET NUMBER = NO.ARRIVALS
    LET TYPE = RN.TYPE
    IF TYPE = 18
      LET EQ.TYPE = RN.18
    ELSE
      LET EQ.TYPE = CO.EQ.TYPE(TYPE)
    ALWAYS
    LET PRTY = RN.PRTY
    LET START.TIME = TIME.V
    CALL SET.PARM GIVING JOB
    IF BETWEEN.V = 'TRACE'
      CALL PRINT.JOB
    ALWAYS
    FILE JOB IN Q1
    SCHEDULE A Q1.MON NOW  '' SEND JOB TO ATE OR TB IF POSSIBLE
    LOOP
END
```

ORIGINAL PAGE IS
OF POOR QUALITY

```
PROCESS ATE      ''AUTOMATIC TEST EQUIPMENT

  '' THIS PROCESS SIMULATES THE WORK DONE AT THE ATE.

  IF STATUS(JOB.ATE) = 1  ''PRE.REPAIR
    LET TM.PRE.REPAIR(JOB.ATE) = UNIFORM.F(.2,4.,5) * 60.
    WORK TM.PRE.REPAIR(JOB.ATE) MINUTES
    IF RANDOM.F(1) LE CHECK.PROB   ''FAULT CONFIRMED ?
      LET STATUS(JOB.ATE) = 2  ''REPAIR
    ELSE
      SCHEDULE AN END.JOB GIVING JOB.ATE NOW
      GO TO RETRN
    ALWAYS
  ALWAYS

  IF STATUS(JOB.ATE) = 2  ''REPAIR
    LET TM.REPAIR(JOB.ATE) = UNIFORM.F(.5,4.,6) * 60.
    IF TM.REPAIR(JOB.ATE) LT K4
      WORK TM.REPAIR(JOB.ATE) MINUTES  ''IMMEDIATE REPAIR AT ATE.
      LET STATUS(JOB.ATE) = 3  ''POST.REPAIR
      LET TM.POST.REPAIR(JOB.ATE) = UNIFORM.F(.5,2.,7) * 60.
      IF TM.POST.REPAIR(JOB.ATE) LT K5
        WORK TM.POST.REPAIR(JOB.ATE) MINUTES  ''IMMEDIATE POST REPAIR
TEST AT ATE.
        CALL CHECK.REPAIR GIVING JOB.ATE
      ELSE  ''DEFER POST REPAIR TEST AT ATE.
        LET PRTY(JOB.ATE) = MAX.F(PRTY(JOB.ATE),2)
        LET RANK(JOB.ATE) = PRTY(JOB.ATE)+ 1
        FILE JOB.ATE IN Q2   ''LIFO WITH PRTY
      ALWAYS
    ELSE  ''DO REPAIR AT REPAIR BENCH.
      FILE JOB.ATE IN Q3  ''REPAIR AT A REPAIR BENCH
      SCHEDULE A Q3.MON NOW  ''INITIATE REPAIR IF POSSIBLE
    ALWAYS
    GO TO RETRN

  ELSE
  IF STATUS(JOB.ATE) = 3  ''POST.REPAIR
    IF TM.POST.REPAIR(JOB.ATE) = 0
      LET TM.POST.REPAIR(JOB.ATE) = UNIFORM.F(.5,2.,7) * 60.
    ALWAYS
    WORK TM.POST.REPAIR(JOB.ATE) MINUTES
    CALL CHECK.REPAIR GIVING JOB.ATE
  ALWAYS

  'RETRN'
  SCHEDULE A Q2.MON NOW  ''INITIATE NEXT JOB IN Q2
END
```

ORIGINAL PAGE IS
OF POOR QUALITY

```
PROCESS TB      ''TEST BENCH (MANUAL)

  '' THIS PROCESS SIMULATES ALL WORK DONE AT THE MANUAL
  '' TEST BENCH.

  IF STATUS(JOB.TB) = 1   ''PRE.REPAIR
    LET TM.PRE.REPAIR(JOB.TB) = UNIFORM.F(.8,16.,8) * 60.
    WORK TM.PRE.REPAIR(JOB.TB) MINUTES
    IF RANDOM.F(1) LE CHECK.PROB   '' FAULT CONFIRMED ?
      LET STATUS(JOB.TB) = 2   ''REPAIR
    ELSE
      SCHEDULE AN END.JOB GIVING JOB.TB NOW
      GO TO RETRN
    ALWAYS
  ALWAYS

  IF STATUS(JOB.TB) = 2   ''REPAIR
    LET TM.REPAIR(JOB.TB) = UNIFORM.F(.5,4.,6) * 60.
    WORK TM.REPAIR(JOB.TB) MINUTES
    LET STATUS(JOB.TB)= 3   ''POST.REPAIR
  ALWAYS

  IF STATUS(JOB.TB) = 3   ''POST.REPAIR
    LET TM.POST.REPAIR(JOB.TB) = UNIFORM.F(2.,8.,9) * 60.
    WORK TM.POST.REPAIR(JOB.TB) MINUTES
    CALL CHECK.REPAIR GIVING JOB.TB
  ALWAYS

  'RETRN'
  SCHEDULE A Q1.MON NOW   ''INITIATE NEXT JOB IN Q1
END
```

```
PROCESS RB      '' REPAIR BENCH

  '' THIS PROCESS SIMULATES ALL WORK DONE AT THE REPAIR BENCH.

  WORK TM.REPAIR(JOB.RB) MINUTES
  LET STATUS(JOB.RB) = 3   ''POST.REPAIR
  LET PRTY(JOB.RB) = MAX.F(PRTY(JOB.RB),2)
  FILE JOB.RB IN Q1
  SCHEDULE A Q1.MON NOW   ''INITIATE POST REPAIR TEST IF POSSIBLE
  SCHEDULE A Q3.MON NOW   ''INITIATE NEXT JOB IN Q3
END
E>
```

ORIGINAL PAGE IS
OF POOR QUALITY

ORIGINAL PAGE IS
OF POOR QUALITY

```
ROUTINE TO CHECK.REPAIR GIVEN JOB.CHECK

  '' THIS ROUTINE DETERMINES IF THE REPAIR WAS SUCESSFUL.
  '' IF SO THE JOB IS TERMINATED.  IF NOT SUCESSFUL, THE JOB
  '' IS ASSIGNED STATUS = 1 AND FILED IN Q1.

  DEFINE JOB.CHECK AS AN INTEGER VARIABLE

  IF RANDOM.F(2) LE REPAIR.PROB  '' FAULT REPAIRED ?
    SCHEDULE AN END.JOB GIVING JOB.CHECK NOW  ''ACTIVATE JOB IF POSSIB
LE
  ELSE
    CALL SET.PARM GIVING JOB.CHECK
    FILE JOB.CHECK IN Q1
    SCHEDULE A Q1.MON NOW  ''INITIATE JOB IF POSSIBLE
  ALWAYS
END
```

```
EVENT FOR Q1.MON

  '' THIS EVENT SCANS Q1 AND INITIATES AS MANY JOBS AS POSSIBLE,
  '' SENDING THEM TO EITHER AN ATE OR TB.  ANY PRTY=3 JOBS
  '' REMAINING AT THE END OF THE SCAN ARE SENT TO THE INTERRUPT
  '' ROUTINE TO DETERMINE IF AN INTERRUPT IS POSSIBLE.

  IF SHIFT = 0    ''OVER
    RETURN
  ELSE

  FOR EACH JOB IN Q1 WITH EQ.TYPE NE 2  ''NOT A TEST BENCH
    WHILE N.EV.S(I.ATE) LT NO.ATE  ''ATE AVAILABLE
    DO
    REMOVE JOB FROM Q1
    ACTIVATE AN ATE GIVING JOB NOW
    LOOP

  FOR EACH TB IN TB.INTERRUPT
    WHILE N.EV.S(I.TB) LT NO.TB  ''TEST BENCH AVAILABLE
    DO
    REMOVE TB FROM TB.INTERRUPT
    IF BETWEEN.V = 'TRACE'
      PRINT 1 LINE WITH CTIME AND NUMBER(JOB.TB)
      THUS
     *-**:** JOB     * RESUMED AT TB
    ALWAYS
    RESUME TB
    LOOP

  FOR EACH JOB IN Q1 WITH EQ.TYPE NE 1  ''NOT ATE
    WHILE N.EV.S(I.TB) LT NO.TB   ''TEST BENCH AVAILABLE
    DO
    REMOVE JOB FROM Q1
    ACTIVATE A TB GIVING JOB NOW
    LOOP

  FOR EACH JOB IN Q1 WITH PRTY = 3     '' INTERRUPT ACTIVE JOBS IF POSS
IBLE
    CALL INTERRUPT GIVING JOB

END
```

ORIGINAL PAGE IS
OF POOR QUALITY

ORIGINAL PAGE IS
OF POOR QUALITY

```
EVENT FOR Q2.MON

  ''  THIS EVENT SCANS Q2 AND INITIATES AS MANY JOBS AS POSSIBLE.
  ''  IF ANY ATE S ARE AVAILABLE AT THE END, Q1.MON IS ACTIVATED
  ''  TO SEARCH FOR QUEUED JOBS THERE.


  IF SHIFT = 0   ''SHIFT OVER?
    RETURN
  ELSE

  FOR EACH ATE IN ATE.INTERRUPT
    WHILE N.EV.S(I.ATE) LT NO.ATE   ''ATE AVAILABLE
    DO
    REMOVE ATE FROM ATE.INTERRUPT
    IF BETWEEN.V = 'TRACE'
      PRINT 1 LINE WITH CTIME AND NUMBER(JOB.ATE)
      THUS
     *-**:** JOB     * RESUMED AT ATE
    ALWAYS
    RESUME ATE
    LOOP

  FOR EACH JOB IN Q2
    WHILE N.EV.S(I.ATE) LT NO.ATE   ''ATE AVAILABLE
    DO
    REMOVE JOB FROM Q2
    ACTIVATE AN ATE GIVING JOB NOW
    LOOP

  IF N.EV.S(I.ATE) LT NO.ATE   ''ATE AVAILABLE ?
    SCHEDULE A Q1.MON NOW
  ALWAYS
END
```

```
EVENT FOR Q3.MON

  '' THIS EVENT SCANS Q3 AND INITIATES AS MANY REPAIRS AT THE
  '' REPAIR BENCHES AS POSSIBLE.  ANY PRTY=3 JOBS REMAINING
  '' IN Q3 ARE SENT TO THE INTERRUPT ROUTINE TO DETERMINE IF
  '' AN INTERRUPT IS POSSIBLE.

  IF SHIFT = 0  ''SHIFT OVER ?
    RETURN
  ELSE

  FOR EACH RB IN RB.INTERRUPT
    WHILE N.EV.S(I.RB) LT NO.RB  ''REPAIR BENCH AVAILABLE ?
    DO
    REMOVE RB FROM RB.INTERRUPT
    IF BETWEEN.V = 'TRACE'
      PRINT 1 LINE WITH CTIME AND NUMBER(JOB.RB)
      THUS
      *-**:** JOB     * RESUMED AT RB
    ALWAYS
    RESUME RB
    LOOP

  FOR EACH JOB IN Q3
    WHILE N.EV.S(I.RB) LT NO.RB  ''REPAIR BENCH AVAILABLE
    DO
    REMOVE JOB FROM Q3
    ACTIVATE A RB GIVING JOB NOW
    LOOP

  FOR EACH JOB IN Q3 WITH PRTY = 3  ''INTERRUPT ACTIVE JOB IF POSSIBLE
    CALL RB..INTERRUPT GIVING JOB

END
```

ORIGINAL PAGE IS
OF POOR QUALITY

```
ROUTINE TO INTERRUPT GIVEN JOB.INT

  '' THIS ROUTINE SEARCHES THE ATE(S) AND TB(S) TO DETERMINE IF THE
  '' GIVEN JOB MAY INTERRUPT AN ACTIVE JOB.  IF AN INTERRUPT IS
  '' POSSIBLE THE ACTIVE PROCESS IS INTERRUPTED AND FILED IN THE
  '' INTERRUPT QUEUE.  THE GIVEN JOB THEN ACTIVATES THE AVAILABLE
  '' ATE OR TB.

  DEFINE JOB.INT AS AN INTEGER VARIABLE

  IF EQ.TYPE(JOB.INT) NE 2  ''NOT A TEST BENCH
    FOR EACH ATE IN EV.S(I.ATE) WITH STA.A(ATE) = 1 '' ACTIVE ATE(S)
      DO
      IF PRTY(JOB.ATE) LT 3
        INTERRUPT ATE
        IF TIME.A(JOB.ATE) GT K1/1440.
          IF BETWEEN.V = 'TRACE'
            PRINT 1 LINE WITH CTIME, NUMBER(JOB.INT) AND NUMBER(JOB.AT
E)
            THUS
     *-**:** JOB NUMBER     *  INTERRUPTED JOB NUMBER     *
          ALWAYS
          LET TIME.A(JOB.ATE) = TIME.A(JOB.ATE)*1.1
          LET PRTY(JOB.ATE) = 2
          FILE ATE IN ATE.INTERRUPT
          REMOVE JOB.INT FROM Q1
          ACTIVATE AN ATE GIVING JOB.INT NOW
          RETURN
        ELSE
        RESUME ATE
        CYCLE
      ELSE
      LOOP
  ALWAYS

  IF EQ.TYPE(JOB.INT) NE 1  ''NOT AN ATE
    FOR EACH TB IN EV.S(I.TB) WITH STA.A(TB) = 1 ''ACTIVE TB(S)
      DO
      IF PRTY(JOB.TB) LT 3
        INTERRUPT TB
        IF TIME.A(JOB.TB) GT K2/1440.
          IF BETWEEN.V = 'TRACE'
            PRINT 1 LINE WITH CTIME, NUMBER(JOB.INT) AND NUMBER(JOB.TB
)
            THUS
     *-**:** JOB NUMBER      *  INTERRUPTED JOB NUMBER      *
          ALWAYS
          LET TIME.A(JOB.TB) = TIME.A(JOB.TB)*1.1
          LET PRTY(JOB.TB) = 2
          FILE TB IN TB.INTERRUPT
          REMOVE JOB.INT FROM Q1
          ACTIVATE A TB GIVING JOB.INT NOW
          RETURN
        ELSE
        RESUME TB
        CYCLE
      ELSE
      LOOP
  ALWAYS

END
```

ORIGINAL PAGE IS
OF POOR QUALITY

```
ROUTINE FOR RB..INTERRUPT GIVEN JOB..INT

  '' THIS ROUTINE ENTERS WITH A PRTY=3 JOB.  A SEARCH OF ACTIVE
  '' JOBS AT THE REPAIR BENCHES IS MADE TO LOCATE A JOB THAT MAY
  '' BE INTERRUPTED.  IF AN INTERRUPT IS POSSIBLE, THE INTERRUPTED
  '' PROCESS IS PLACED IN THE INTERRUPT QUEUE AND THE NEW REPAIR IS
  '' ACTIVATED.

  DEFINE JOB..INT AS AN INTEGER VARIABLE

  FOR EACH RB IN EV.S(I.RB) WITH STA.A(RB) = 1
    DO
    IF PRTY(JOB.RB) LT 3
      IF BETWEEN.V = 'TRACE'
        PRINT 1 LINE WITH CTIME, NUMBER(JOB..INT) AND NUMBER(JOB.RB)
        THUS
     *-**:** JOB     * INTERRUPTED JOB     * AT REPAIR BENCH
      ALWAYS
      INTERRUPT RB
      LET TIME.A(JOB.RB) = TIME.A(JOB.RB)*1.1
      LET PRTY(JOB.RB) = MAX.F(PRTY,2)
      FILE RB IN RB.INTERRUPT
      REMOVE JOB..INT FROM Q3
      ACTIVATE A RB GIVING JOB..INT NOW
      RETURN
    ELSE
    LOOP

END
```

ORIGINAL PAGE IS
OF POOR QUALITY

ORIGINAL PAGE IS
OF POOR QUALITY

```
EVENT TO END.JOB

  '' THIS EVENT COMPUTES JOB STATISTICS AND TERMINATES THE JOBS.

  LET JOB = JOB.END
  LET THRPT(TYPE) = (TIME.V-START.TIME)*24. ''HOURS
  LET MNHRS(TYPE) = (TM.PRE.REPAIR
                   + TM.REPAIR
                   + TM.POST.REPAIR)/60.  ''HOURS

  DESTROY JOB

END
```

ORIGINAL PAGE IS
OF POOR QUALITY

```
PROCESS FOR SHIFT.CHANGE

  '' THIS PROCESS SCHEDULES SHIFT CHANGES AND ALLOCATES OVERTIME
  '' BASED ON THE END OF DAY BACKLOG.

  DEFINE DAY AS AN INTEGER VARIABLE

  UNTIL TIME.V GT END.TIME
    DO
    FOR DAY = 1 TO 7
      DO
      IF DAY LE 5
        CALL START.SHIFT
        WAIT 8 HOURS

        IF N.Q1 GE 15     '' OVERTIME ALLOCATION
          SCHEDULE AN END.SHIFT IN 3 HOURS
          JUMP AHEAD
        ELSE IF N.Q1 GE 10
          SCHEDULE AN END.SHIFT IN 2 HOURS
          JUMP AHEAD
        ELSE IF N.Q1 GE 5
          SCHEDULE AN END.SHIFT IN 1 HOUR
          JUMP AHEAD
        ELSE
          SCHEDULE AN END.SHIFT NOW
        HERE

        WAIT 16 HOURS
      ELSE
        WAIT 24 HOURS
      ALWAYS
      LOOP  ''DAILY
    LOOP  ''WEEKLY
END
```

ORIGINAL PAGE IS
OF POOR QUALITY

```
ROUTINE TO START.SHIFT

  '' THIS ROUTINE INITIATES JOBS AT THE BEGINING OF THE SHIFT.

  LET SHIFT = 1
  SCHEDULE A Q1.MON NOW
  SCHEDULE A Q2.MON NOW
  SCHEDULE A Q3.MON NOW
END
```

ORIGINAL PAGE IS
OF POOR QUALITY

```
EVENT TO END.SHIFT

  '' THIS EVENT INTERRUPTS ACTIVE JOBS AT SHIFT END.  THESE PROCESSES
  '' ARE FILED IN THE INTERRUPT QUEUES.  OVERTIME IS ALLOCATED
  '' FOR JOBS NEAR COMPLETION.

  LET SHIFT = 0

  FOR EACH ATE IN EV.S(I.ATE) WITH STA.A(ATE) = 1
    DO
    INTERRUPT ATE
    IF TIME.A(ATE) LT K3/1440.
      RESUME ATE
      CYCLE
    ELSE
    LET TIME.A(ATE) = TIME.A(ATE)*1.1
    FILE ATE IN ATE.INTERRUPT
    LOOP

  FOR EACH RB IN EV.S(I.RB) WITH STA.A(RB) = 1
    DO
    INTERRUPT RB
    IF TIME.A(RB) LT K3/1440.
      RESUME RB
      CYCLE
    ELSE
    LET TIME.A(RB) = TIME.A(RB)*1.1
    FILE RB IN RB.INTERRUPT
    LOOP

  FOR EACH TB IN EV.S(I.TB) WITH STA.A(TB) = 1
    DO
    INTERRUPT TB
    IF TIME.A(TB) LT K3/1440.
      RESUME TB
      CYCLE
    ELSE
    LET TIME.A(TB) = TIME.A(TB)*1.1
    FILE TB IN TB.INTERRUPT
    LOOP

END
```

ORIGINAL PAGE IS
OF POOR QUALITY

```
EVENT FOR SIM.END

  PRINT 1 LINE WITH CTIME AND NO.ARRIVALS THUS
  SIMULATION ENDED AT    *-**:**    NO. JOBS =       *
  CALL RP.THRPT
  CALL RP.MNHRS
  STOP
END
```

ORIGINAL PAGE IS
OF POOR QUALITY

```
ROUTINE FOR RP.THRPT

  DEFINE I,IHR AND MXHR AS INTEGER VARIABLES

  START NEW PAGE

  BEGIN REPORT PRINTING FOR I = 1 TO 18 IN GROUPS OF 9

    BEGIN HEADING
    SKIP 2 LINES
    PRINT 3 LINES WITH A GROUP OF I FIELDS THUS
     HISTOGRAM OF THROUGHPUT TIMES BY COMPONENT TYPE
  COMPONENT TYPE     *     *     *     *     *     *     *     *     *
  HOURS          ----- ----- ----- ----- ----- ----- ----- ----- -----
    END  ''HEADING

  LET MXHR = 0
  FOR EACH STATISTIC
    LET MXHR = MAX.F(MXHR,MX.THRPT)
  FOR IHR = 1 TO MIN.F(MXHR/4,25) BY 1
    PRINT 1 LINE WITH IHR*4 AND A GROUP OF HS.THRPT(I,IHR) FIELDS THUS
      *               *     *     *     *     *     *     *     *     *
  PRINT 1 LINE THUS
                  ----- ----- ----- ----- ----- ----- ----- ----- -----
  PRINT 1 LINE WITH A GROUP OF AV.THRPT(I) FIELDS THUS
  AVERAGE          *.*   *.*   *.*   *.*   *.*   *.*   *.*   *.*   *.*
  PRINT 1 LINE WITH A GROUP OF VA.THRPT(I) FIELDS THUS
  VARIANCE         *.*   *.*   *.*   *.*   *.*   *.*   *.*   *.*   *.*
  PRINT 1 LINE WITH A GROUP OF MX.THRPT(I) FIELDS THUS
  MAXIMUM          *.*   *.*   *.*   *.*   *.*   *.*   *.*   *.*   *.*
  PRINT 1 LINE WITH A GROUP OF NO.THRPT(I) FIELDS THUS
  NUMBER            *     *     *     *     *     *     *     *     *
  END  ''REPORT
END
```

ORIGINAL PAGE IS
OF POOR QUALITY

ORIGINAL PAGE IS
OF POOR QUALITY

```
ROUTINE FOR RP.MNHRS

  DEFINE I,IHR AND MXHR AS INTEGER VARIABLES

  START NEW PAGE

  BEGIN REPORT PRINTING FOR I = 1 TO 18 IN GROUPS OF 9

    BEGIN HEADING
    SKIP 2 LINES
    PRINT 3 LINES WITH A GROUP OF I FIELDS THUS
     HISTOGRAM OF MANHOURS BY COMPONENT TYPE
  COMPONENT TYPE     *     *     *     *     *     *     *     *     *
  HOURS          ----- ----- ----- ----- ----- ----- ----- ----- -----
    END  ''HEADING

  LET MXHR = 0
  FOR EACH STATISTIC
    LET MXHR = MAX.F(MXHR,MX.MNHRS)
  FOR IHR = 1 TO MIN.F(MXHR/2,25) BY 1
    PRINT 1 LINE WITH IHR*2 AND A GROUP OF HS.MNHRS(I,IHR) FIELDS THUS
      *           *     *     *     *     *     *     *     *     *
  PRINT 1 LINE THUS
              ----- ----- ----- ----- ----- ----- ----- ----- -----
  PRINT 1 LINE WITH A GROUP OF AV.MNHRS(I) FIELDS THUS
  AVERAGE         *.*   *.*   *.*   *.*   *.*   *.*   *.*   *.*   *.*
  PRINT 1 LINE WITH A GROUP OF VA.MNHRS(I) FIELDS THUS
  VARIANCE        *.*   *.*   *.*   *.*   *.*   *.*   *.*   *.*   *.*
  PRINT 1 LINE WITH A GROUP OF MX.MNHRS(I) FIELDS THUS
  MAXIMUM         *.*   *.*   *.*   *.*   *.*   *.*   *.*   *.*   *.*
  PRINT 1 LINE WITH A GROUP OF NO.MNHRS(I) FIELDS THUS
  NUMBER           *     *     *     *     *     *     *     *     *
  END  ''REPORT
END
```

C-3

ORIGINAL PAGE IS
OF POOR QUALITY

```
ROUTINE TO TRACE

  IF EVENT.V = I.ARRIVAL
    PRINT 1 LINE WITH CTIME AND NO.ARRIVALS+1 THUS
     *-**:** PROCESS ARRIVAL     NO      *
    RETURN

  ELSE IF EVENT.V = I.SHIFT.CHANGE
    PRINT 1 LINE WITH CTIME
    AND MOD.F(SHIFT+1,2) THUS
     *-**:** PROCESS SHIFT.CHANGE,  SHIFT = *
    RETURN

  ELSE IF EVENT.V = I.ATE
    PRINT 1 LINE WITH CTIME, NUMBER(JOB.ATE) AND STATUS(JOB.ATE) THUS
     *-**:** PROCESS ATE FOR JOB      *  STATUS *
    RETURN

  ELSE IF EVENT.V = I.RB
    PRINT 1 LINE WITH CTIME, NUMBER(JOB.RB) AND STATUS(JOB.RB) THUS
     *-**:** PROCESS RB FOR JOB      *  STATUS *
    RETURN

  ELSE IF EVENT.V = I.TB
    PRINT 1 LINE WITH CTIME, NUMBER(JOB.TB) AND STATUS(JOB.TB) THUS
     *-**:** PROCESS TB FOR JOB     *  STATUS *
    RETURN

  ELSE IF EVENT.V = I.Q1.MON
    PRINT 1 LINE WITH CTIME THUS
     *-**:** EVENT Q1.MON
    RETURN

  ELSE IF EVENT.V = I.Q2.MON
    PRINT 1 LINE WITH CTIME THUS
     *-**:** EVENT Q2.MON
    RETURN

  ELSE IF EVENT.V = I.Q3.MON
    PRINT 1 LINE WITH CTIME THUS
     *-**:** EVENT Q3.MON
    RETURN

  ELSE IF EVENT.V = I.END.JOB
    PRINT 1 LINE WITH CTIME AND NUMBER(JOB.END) THUS
     *-**:** EVENT END.JOB FOR JOB     *
    RETURN

  ELSE IF EVENT.V = I.END.SHIFT
    PRINT 1 LINE WITH CTIME THUS
     *-**:** EVENT END.SHIFT
    RETURN

  ELSE IF EVENT.V = I.SIM.END
    PRINT 1 LINE WITH CTIME THUS
     *-**:** EVENT SIM.END
    RETURN
```

ORIGINAL PAGE IS
OF POOR QUALITY

```
ROUTINE TO PRINT.JOB
  PRINT 4 LINES WITH NUMBER, TYPE, EQ.TYPE, PRTY, RANK,
    TM.PRE.REPAIR, TM.REPAIR, TM.POST.REPAIR,
    AND STATUS THUS
  JOB
  NUMBER      *  TYPE   *  EQ.TYPE *  PRTY *  RANK *
  TM.PRE.REPAIR  *.***  TM.REPAIR  *.***  TM.POST.REPAIR  *.***
  STATUS  *
END
```

APPENDIX VIII

REPLICATED SYSTEM COMPONENT REMOVALS

REPLICATED SYSTEM CMPONENT REMOVALS INTRODUCTION

In this appendix, a simplified fault-tolerant computer is considered, consisting of several different stages in series, each stage having replicated components in parallel. The prediction of line and shop maintenance cost depends on the ability to determine the removal rate of the LRU and components within the LRU. The simplified fault-tolerant multiprocessor (FTMP) has the following component characteristics:

Nineplex	MTBF (Each), Hours
o Central Processors	20,000
o Memories	20,000
o I/O Ports	30,000
o Clocks	30,000

To dispatch the airplane, there must be no more than one failure in any nineplex. Two or more failures in any nineplex will entail removal and repair of the entire FTMP.

Two analytical solutions for the removal rate of the LRU are provided below: a general solution to the removal rate of the components and a simulation program that provides removal rate of the LRU and component stages. The SIMSCRIPT simulation provides results in close agreement with the analytical solutions and represents a short programming task compared with work required for the analytical solutions. Simulation of 22 million operating hours costs approximately $10.

Dispatch with No More Than One Failure per Nineplex

The FTMP dispatch success rate is the existence of no more than one failure in any of the four modules. In the (i)th nineplex, $1 \leq (i) \leq 4$, the probability of success is given by:

$$(1)\quad R(t) = P(0 \text{ failures}) + P(1 \text{ failure})$$
$$= P(9 \text{ successes}) + P(8 \text{ successes})$$
$$= (\exp(-a(i).t))^{**}9 + 9(\exp(-a(i).t))^{**}8 \; (1 - \exp(-a(i).t))$$

where a(i) = 1/M(i) = failure rate of each of the 9 subunits

Simplifying,

$$(2)\quad R(i) = -8 \exp(-9a(i).t) + 9 \exp(-8a(i).t)$$

In this case,

a(1) = a(3) = 1/20,000 failures/hour

a(2) = a(4) = 1/30,000 failures/hour

Therefore,

$$R(FTMP) = (R(1)^{**}2).(R(2)^{**}2)$$
$$= (-8 \exp(-9a(1).t) + 9 \exp(-8a(1).t))^{**}2) \cdot (-8 \exp(-9a(2).t) + 9 \exp(-8a(2).t))^{**}2), \text{ where}$$

$$(3)\quad R(FTMP) = \prod_{i=1}^{2} 64\exp(-18a(i).t) - 144\exp(-17a(i).t) + 81\exp(-16a(i).t))$$

To obtain the FTMP's mean time to removal,

$$(4)\quad MTTR(FTMP) = \int_0^\infty R(FTMP)\,dt$$

Expanding equation (3) and integrating term-by-term, we obtain

$$(5)\quad MTTR(FTMP) = \frac{4096}{18(a(1)+a(2)} - \frac{9216}{18a(1)+17a(2)} + \frac{5184}{18a(1)+16a(2)} - \frac{9216}{17a(1)+18a(2)} + \frac{20{,}736}{17(a(1)+a(2))} - \frac{11{,}664}{17a(1)+16a(2)} + \frac{5184}{16a(1)+18a(2)} - \frac{11{,}664}{16a(1)+17a(2)} + \frac{6561}{16(a(1)+a(2))}$$

In the case under analysis,

$a = 1/20{,}000 = 5 \times 10^{**}(-5)$ failures/hr

$a = 1/30{,}000 = 3.333 \times 10^{**}(-5)$ failures/hr

Substituting in (5),

MTTR = 2259 hours; removal rate/1000 hours = 1000/2259
= 0.443

R(FTMP) was programmed on the T1/59. The program listing and user instructions are provided in Figure 4.

As verification, R(FTMP) was tabulated and integrated via the trapezoidal Simpson's Rule (see fig. 1), obtaining an approximate result of 2255 hours, which agrees beautifully with the exact analytical result of 2259 hours.

If only the offending nineplex were removed rather than the entire FTMP; what would this do to overall removal rate? Integrating equation (2) from 0 to infinity,

$$(6)\quad MTTR = \frac{-8}{9a(i)} + \frac{9}{8a(i)} = \frac{-8M(i)}{9} + \frac{9M(i)}{8}$$

where M(i) are the MTBF's for component type (i).

If M(1) = 30,000 = M(3), then MTTR(1) = MTTR(3) = 7083 hours

If M(2) = 20,000 = M(4), then MTTR(2) = MTTR(4) = 4722 hours

To depict the difference that results from removing the entire FTMP, compare the expected number of removals per 1000 hours.

Removal Level	Removals/1000 Hours
Entire FTMP	0.443
Central Proc.'s	0.212
Memories	0.212
I/O Ports	0.141
Clocks	0.141
TOTAL	0.706

Removing at the nineplex level would entail 61 percent more airplane removal actions than at the FTMP level.

Dispatch with No More Than Two Failures per Nineplex

If the FTMP dispatch success state is relaxed to permit a maximum of two failures per nineplex, what is the expected improvement in MTTR? Employing the same notation as before, for each nineplex

$$
\begin{aligned}
(7)\quad R(i) &= P(9 \text{ successes}) + P(8 \text{ successes}) + P(7 \text{ successes}) \\
&= (\exp(-9a(i).t)) + 9(\exp(-9a(i).t))\,(1 - \exp(-a(i).t)) \\
&\quad + 36(\exp(-7a(i).t))\,(1 - \exp(-a(i).t))^{**2} \\
&= 28\exp(-9a(i).t) - 63\exp(-8a(i).t) + 36\exp(-7a(i).t)
\end{aligned}
$$

Simplifying,

$$
\begin{aligned}
(8)\quad R(i) &= 784\exp(-18a(i).t) - 3528\exp(-17a(i).t) \\
&\quad + 5985\exp(-16a(i).t) - 4536\exp(-15a(i).t) \\
&\quad + 1296\exp(-14a(i).t),\ 1 \le i \le 2
\end{aligned}
$$

The complete formula, of course, is yielded by $\prod_{i=1}^{2} (R(i))^{**2}$

and is shown in Figure 3.

The removal rate per nineplex is determined by integrating equation (7):

$$
\begin{aligned}
MTTR(i) &= \int_0^\infty (28\exp(-9a(i).t) - 63\exp(-8a(i).t) + \\
&\quad 36\exp(-7a(i).t)dt \\
&= \frac{28}{9a(i)} - \frac{63}{8a(i)} + \frac{36}{7a(i)} \\
&= 1/a(i)(0.379) = 0.379M(i)
\end{aligned}
$$

where $M(1) = 30{,}000$ hours, $MTTR(1) = 11{,}370$ hours
$M(2) = 20{,}000$ hours, $MTTR(2) = 7580$ hours

As before, the expected number of removals per 1000 hours will be compared.

Removal Level	Removals/1000 Hours
Entire FTMP	0.230
Central Proc.'s	0.132
Memories	0.132
I/O Ports	0.088
Clocks	0.088
TOTAL	0.440

In this case, removal at the nineplex level would require 91 percent more removal actions than at the highest (FTMP) level. The TI/59 computer program for R(FTMP) in this case is given in Figure 5.

A NOTE ON ANALYSIS METHODS

In general, combinatorial reliability problems, such as the subject "k out of n" system, become forbiddingly complex if exact solutions are sought for MTBR. Furthermore, the calculations ordinarily involve small differences between very large numbers and erroneous results may occur due to computer (or calculator) truncation errors. As demonstrated here, Simpson's Rule integration of the reliability function is quite accurate for MTBF or MTTR determination. Furthermore, if any or all of the failure rates are time varying, exact integrations are obtainable only via the greatest analytical power, whereas the Simpson's Rule approach offers no inherent difficulties.

SUMMARY

A simplified FTMP was analyzed here for two dispatch rules.

A. Dispatch if no more than one failure in any nineplex; repair with two or more failures in any nineplex.
B. Dispatch if no more than two failures in any nineplex, repair if three or more failures in any nineplex.

The results for each case are repeated below.

ORIGINAL PAGE IS
OF POOR QUALITY

REPAIR LEVEL	REMOVAL RATES PER 1000 HOURS A Repair if 2 or More Failures in Any Nineplex	 B Repair if 3 or More Failures in Any Nineplex
FTMP	0.443	0.230
NINEPLEX		
Central Proc.'s	.212	.132
Memories	.212	.132
I/O Ports	.141	.088
Clocks	.141	.088
TOTAL	0.706	0.440

ORIGINAL PAGE IS
OF POOR QUALITY

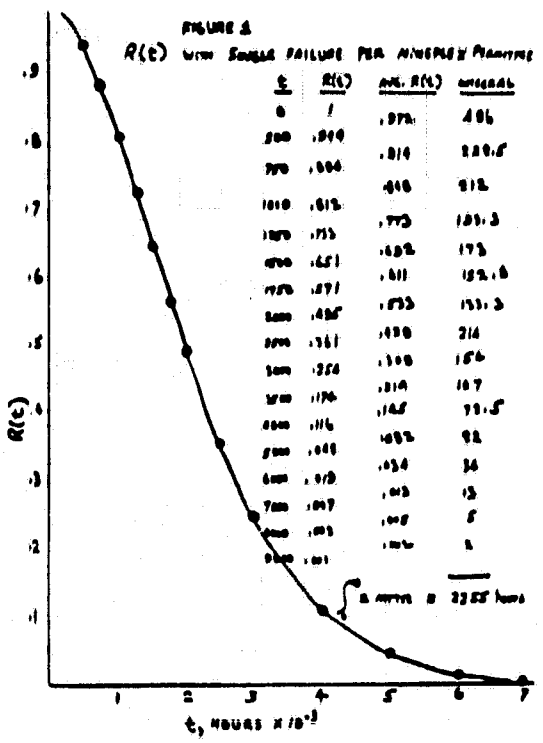

FIGURE 1

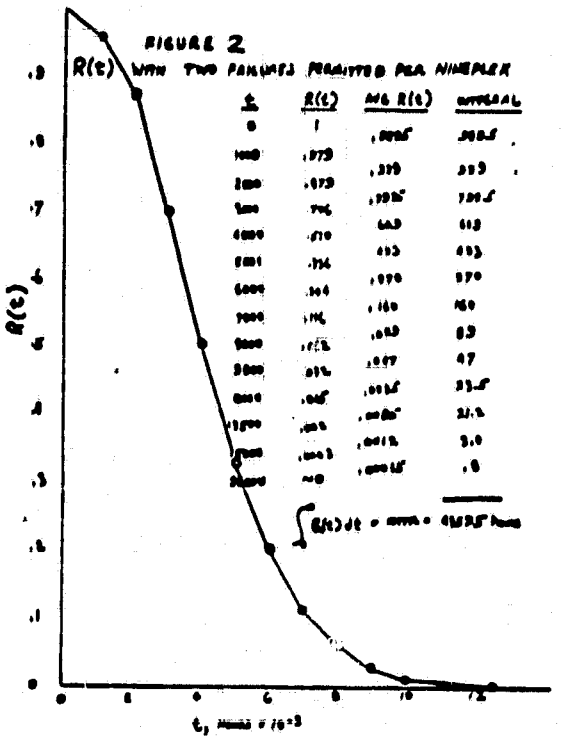

FIGURE 2

FIGURE 3

$$R_{FTMP}(t) = \left[R_1(t)\cdot R_2(t)\right]^2 =$$

$$= 614{,}656\, e^{-18(\lambda_1+\lambda_2)t} - 2{,}765{,}952\, e^{-(18\lambda_1+17\lambda_2)t} + 4{,}692{,}240\, e^{-(18\lambda_1+16\lambda_2)t} - 3{,}556{,}224\, e^{-(18\lambda_1+15\lambda_2)t} + 1{,}016{,}064\, e^{-(18\lambda_1+14\lambda_2)t}$$

$$- 2{,}765{,}952\, e^{-(17\lambda_1+18\lambda_2)t} + 12{,}446{,}784\, e^{-17(\lambda_1+\lambda_2)t} - 21{,}115{,}080\, e^{-(17\lambda_1+16\lambda_2)t} + 16{,}603{,}008\, e^{-(17\lambda_1+15\lambda_2)t} - 4{,}572{,}288\, e^{-(17\lambda_1+14\lambda_2)t}$$

$$+ 4{,}692{,}240\, e^{-(16\lambda_1+18\lambda_2)t} - 21{,}115{,}080\, e^{-(16\lambda_1+17\lambda_2)t} + 35{,}820{,}225\, e^{-16(\lambda_1+\lambda_2)t} - 27{,}147{,}960\, e^{-(16\lambda_1+15\lambda_2)t} + 7{,}756{,}650\, e^{-(16\lambda_1+14\lambda_2)t}$$

$$- 3{,}556{,}224\, e^{-(15\lambda_1+18\lambda_2)t} + 16{,}603{,}008\, e^{-(15\lambda_1+17\lambda_2)t} - 27{,}147{,}960\, e^{-(15\lambda_1+16\lambda_2)t} + 26{,}575{,}296\, e^{-15(\lambda_1+\lambda_2)t} - 5{,}678{,}656\, e^{-(15\lambda_1+14\lambda_2)t}$$

$$+ 1{,}016{,}064\, e^{-(14\lambda_1+18\lambda_2)t} - 4{,}572{,}288\, e^{-(14\lambda_1+17\lambda_2)t} + 7{,}756{,}560\, e^{-(14\lambda_1+16\lambda_2)t} - 5{,}678{,}656\, e^{-(14\lambda_1+15\lambda_2)t} + 1{,}679{,}616\, e^{-14(\lambda_1+\lambda_2)t}$$

Note that when $t=0$, reliability $=1$, and all the exponentials become $=1$; therefore the reliability $(=1)$ = the sum of the coefficients. To verify this, Σ positive terms $= 130{,}072{,}321$ and

Σ negative terms $= -130{,}072{,}320$

Σ terms $= 1$

$$MTTR = \int_0^\infty R_{FTMP}(t)\,dt = \frac{614{,}656}{18(\lambda_1+\lambda_2)} - \frac{2{,}765{,}952}{18\lambda_1+17\lambda_2} + - \cdots - \frac{5{,}678{,}656}{14\lambda_1+15\lambda_2} + \frac{1{,}679{,}616}{14(\lambda_1+\lambda_2)}$$

Substituting $\lambda_1 = 1/30{,}000 = 3.3333\times10^{-5}$ and

$\lambda_2 = 1/20{,}000 = 5\times10^{-5}$ failures/hour, one obtains

MTTR = 4353 hours Removal Rate/1000 hours $= \frac{1000}{4353} = .230$

FIGURE 3

ORIGINAL PAGE IS
OF POOR QUALITY

TI/59 PROGRAM FOR ONE FAILURE PERMITTED/NONREPAIR

000	76	LBL
001	11	A
002	43	RCL
003	03	03
004	65	×
005	01	1
006	06	6
007	55	÷
008	43	RCL
009	01	01
010	95	=
011	94	+/-
012	22	INV
013	23	LNX
014	65	×
015	06	6
016	04	4
017	95	=
018	42	STO
019	04	04
020	43	RCL
021	03	03
022	65	×
023	01	1
024	07	7
025	55	÷
026	43	RCL
027	01	01
028	95	=
029	94	+/-
030	22	INV
031	23	LNX
032	65	×
033	01	1
034	04	4
035	04	4
036	95	=
037	94	+/-
038	44	SUM
039	04	04
040	43	RCL
041	03	03
042	65	×
043	01	1
044	06	6
045	55	÷
046	43	RCL
047	01	01
048	95	=
049	94	+/-
050	22	INV
051	23	LNX
052	65	×
053	08	8
054	01	1
055	95	=
056	44	SUM
057	04	04
058	43	RCL
059	03	03
060	65	×
061	01	1
062	08	8
063	55	÷
064	43	RCL
065	02	02
066	95	=
067	94	+/-
068	22	INV
069	23	LNX
070	65	×
071	06	6
072	04	4
073	95	=
074	42	STO
075	05	05
076	43	RCL
077	03	03
078	65	×
079	01	1
080	07	7
081	55	÷
082	43	RCL
083	02	02
084	95	=
085	94	+/-
086	22	INV
087	23	LNX
088	65	×
089	01	1
090	04	4
091	04	4
092	95	=
093	94	+/-
094	44	SUM
095	05	05
096	43	RCL
097	03	03
098	65	×
099	01	1
100	06	6
101	55	÷
102	43	RCL
103	02	02
104	95	=
105	94	+/-
106	22	INV
107	23	LNX
108	65	×
109	08	8
110	01	1
111	95	=
112	44	SUM
113	05	05
114	43	RCL
115	03	03
116	95	=
117	99	PRT
118	43	RCL
119	05	05
120	65	×
121	43	RCL
122	04	04
123	95	=
124	99	PRT
125	43	RCL
126	04	04
127	95	=
128	34	fx
129	99	PRT
130	43	RCL
131	05	05
132	95	=
133	34	fx
134	99	PRT
135	43	RCL
136	03	03
137	95	=
138	99	PRT
139	98	ADV
140	91	R/S
141	76	LBL
142	15	E
143	42	STO
144	03	03
145	61	GTO
146	11	A

LOAD $1/\lambda_1 = A_1$ in R01

$1/\lambda_2 = A_2$ in R02

Enter t in hours, press E

FIGURE 4

R00: R01: R02:	0.	
	1.	
	1.	
	1.	
	1.	
	0.	
	1. → t	
0.99999974 → R00		
0.99999991 → R01		
0.99999998 → R02		
	1. → t	
	10.	
	.9999740663	
	.9999910254	
	.9999960076	
	10.	
	100.	
	.9974674393	
	.9991250977	
	.9996074758	
	100.	
	500.	
	.9438532414	
	.9804470276	
	0.9908926	
	500.	
	750.	
	.9839720021	
	.9929481885	
	.9804470276	
	750.	
	1000.	
	0.811ee8119	
	.9318552013	
	.9888092798	
	1000.	
	1250.	
	.7325797386	
	.9005133396	
	.9504675648	
	1250.	
	1500.	
	0.651307635	
	0.86605336	
	.9318552013	
	1500.	
	1750.	
	.5713852341	
	.8294211204	
	.9113588525	
	1750.	
	2000.	
	0.495352958	
	.7914033991	
	.8893228868	
	2000.	
	2500.	
	.3609655631	
	.7136952317	
	.8418216494	
	2500.	
	3000.	
	.2540020094	
	0.63e825322	
	.7914033991	
	3000.	
	3500.	
	.1736072838	
	0.563312254	
	.739e644945	
	3500.	
	4000.	
	.1157722578	
	.494e775562	
	.687830385	
	4000.	
	5000.	
	.0484644151	
	.3748227526	
	.5873329619	
	5000.	
	6000.	
	.0190232362	
	.2788174777	
	.494e775562	
	6000.	
	7000.	
	0.007100103	
	.2044735487	
	.4120929549	
	7000.	
	8000.	
	.0025448336	
	.1482700562	
	.3402328348	
	8000.	
	9000.	
	.0008823087	
	.1065345049	
	.2788174777	
	9000.	
	10000.	
	.0002975299	
	.075568777	
	.2270545141	
	10000.	
	12500.	
	0.000017855	
	.0317890179	
	.1929234733	
	12500.	
	15000.	
	.0000064666	
	.0129417336	
	.075568777	
	15000.	
	17500.	
	.0000004485	
	0.0051e5906	
	.041e51e158	
	17500.	
	20000.	
	.0000009023	
	.0020215855	
	.0236215335	
	20000.	
	22500.	
	.0000000001	
	.0007501659	
	.012941733e	
	22500.	

$\lambda_1 = 20,000$

$\lambda_2 = 30,000$

ORIGINAL PAGE IS
OF POOR QUALITY

ORIGINAL PAGE IS
OF POOR QUALITY

TI/59 Program for Two Failures Permitted/Non-Poly

```
000 76 LBL   047 43 RCL   094 74 SM*   141 43 RCL
001 11 A     048 03 03    095 09 09    142 08 08
002 02 2     049 65 x     096 43 RCL   143 74 SM*
003 42 STO   050 01 1     097 03 03    144 09 09
004 00 00    051 07 7     098 65 x     145 73 RC*
005 00 0     052 55 ÷     099 01 1     146 09 09
006 42 STO   053 73 RC*   100 05 5     147 34 FIX
007 05 05    054 00 00    101 55 ÷     148 99 PRT
008 42 STO   055 95 =     102 73 RC*   149 97 DSZ
009 04 04    056 94 +/-   103 00 00    150 00 00
010 42 STO   057 22 INV   104 95 =     151 12 B
011 05 09    058 23 LNX   105 94 +/-   152 43 RCL
012 43 RCL   059 65 x     106 22 INV   153 05 05
013 03 03    060 03 3     107 23 LNX   154 65 x
014 99 PRT   061 05 5     108 65 x     155 43 RCL
015 76 LBL   062 02 2     109 04 4     156 04 04
016 12 B     063 08 8     110 05 5     157 95 =
017 43 RCL   064 94 +/-   111 09 9     158 99 PRT
018 03 03    065 95 =     112 36 .     159 43 RCL
019 65 x     066 42 STO   113 06 6     160 03 03
020 01 1     067 08 08    114 94 +/-   161 99 PRT
021 08 8     068 43 RCL   115 95 =     162 96 RUN
022 55 ÷     069 08 08    116 42 STO   163 91 R/S
023 73 RC*   070 74 SM*   117 08 08    164 76 LBL
024 00 00    071 09 09    118 43 RCL   165 15 E
025 95 =     072 43 RCL   119 08 08    166 42 STO
026 94 +/-   073 03 03    120 74 SM*   167 08 08
027 22 INV   074 65 x     121 09 09    168 61 GTO
028 23 LNX   075 01 1     122 43 RCL   169 11 A
029 65 x     076 06 6     123 03 03
030 07 7     077 55 ÷     124 65 x
031 08 8     078 73 RC*   125 04 4
032 04 4     079 00 00    126 55 ÷
033 55 ÷     080 95 =     127 73 RC*
034 42 STO   081 94 +/-   128 00 00
035 08 08    082 22 INV   129 95 =
036 43 RCL   083 23 LNX   130 94 +/-
037 00 00    084 65 x     131 22 INV
038 65 x     085 05 5     132 23 LNX
039 03 3     086 09 9     133 65 x
040 95 =     087 08 8     134 01 1
041 42 STO   088 05 5     135 02 2
042 09 09    089 95 =     136 09 9
043 43 RCL   090 42 STO   137 06 6
044 08 08    091 08 08    138 95 =
045 74 SM*   092 43 RCL   139 42 STO
046 05 09    093 08 08    140 08 08
```

Load $\frac{1}{2}$, A, = R4

Load $\frac{1}{2}$, A, = R3

Enter t_2, Hours

Keyboard, Press E

And obtain Answer

	0.	
	1.	
	1.	
	1.	
	0.	
		4000.
500.	t_1, hours	.9084153126
.9996479555	R_1	.7863769385
.9988654294	R_2	.5103063682
.9970378427	R_{1+2}, t_2, hours	4000.
500.		
		4500.
1000.		.85154
.9974452491		.68091
0.9921965575		.3362016049
.9794382546		5000.
1000.		
		6000.
1500.		.7863789385
0.9921965575		.5749547166
.9772358205		.2044235984
.9401513145		6000.
1500.		
		7000.
1750.		.7165612567
.9881950502		.4753347209
.9663797934		.1180421469
.9119783852		7000.
1750.		
		8000.
2000.		.6452449681
.9832210516		.3662076324
0.9532956267		.0620999119
.8765338289		8000.
2000.		
		9000.
2250.		.5749547166
.9772358205		.3091065429
.9380891402		.0315856121
0.8640486676		9000.
2250.		
		10000.
2500.		.5075713.04
.9702502265		.2442724563
.9208370004		.0155334527
.7963431848		10000.
2500.		
		12500.
3000.		.3591306871
0.9532956267		.1256662276
.8812509156		.0021684992
.7057571951		12500.
3000.		
		15000.
		.2442724563
		.0855339046
		.0002562202
		15000.

FIGURE 5

ORIGINAL PAGE IS
OF POOR QUALITY

Dr. Davin Rose 575-5097 ①
Dr. Fritz Scholz 575-5438

Subject: Further results on system MTBF and component repair rates.

We are dealing with a system, box, or LRU, which consists of k independent subsystems connected in series. The ith subsystem is an M_i out of N_i system of components of type i, i.e. the ith subsystem operates as long as M_i of its N_i components operate. Each component in subsystem i operates independently with constant failure rate L_i.

We are interested in the mean time between failures, MTBF, or equivalently the expected lifetime of the overall system. We are also interested in the expected number of components that need replacement or repair when the system or LRU fails. Denoting this expected number by $E\,M(T)$ we are then able to compute the long run average number of components replaced per unit time (ACUT), namely $E\,M(T)/MTBF$.

If T denotes the life length of the overall system and if $x_i = N_i - M_i + 1$ then the expected value of T, or equivalently the MTBF is

$$(1)\quad MTBF = \sum_{j_1=0}^{x_1-1} \cdots \sum_{j_k=0}^{x_k-1} \sum_{u_1=0}^{j_1} \cdots \sum_{u_k=0}^{j_k} \binom{N_1}{j_1} \cdots \binom{N_k}{j_k} \binom{j_1}{u_1} \cdots \binom{j_k}{u_k} \frac{(-1)^{u_1+\cdots+u_k}}{\sum_{i=1}^{k} L_i (N_i + u_i - j_i)}$$

The derivation of formula (1) will be found in Addendum A3-1

ORIGINAL PAGE IS
OF POOR QUALITY

ORIGINAL PAGE IS
OF POOR QUALITY

If $M(T)$ denotes the number of components that need replacement or repair at total system failure then

$$(2)\quad E\,M(T) = 1 - \sum_{j_1=0}^{N_1-1} \cdots \sum_{j_k=0}^{N_k-1} \sum_{u_1=0}^{j_1} \cdots \sum_{u_k=0}^{j_k} \binom{N_1}{j_1} \cdots \binom{N_k}{j_k} \binom{j_1}{u_1} \cdots \binom{j_k}{u_k} (-1)^{u_1+\cdots+u_k} \cdot \frac{\sum_{i=1}^{k} L_i u_i}{\sum_{i=1}^{k} L_i (N_i + u_i - j_i)}$$

The derivation of formula (2) will be found in Addendum A8-1

From (1) and (2) we can then compute the ACUT, which is defined as $E\,M(T)/MTBF$. The operational meaning of this definition is explained in detail in Appendix B. Roughly $E\,M(T)/MTBF$ represents the average number of components to be replaced per unit time if upon each failure of the system it is renewed (all bad components are replaced) and we observe this renewal process over a long period of time.

The following numerical results are derived in Appendix C.

For $k=4$, $L_1 = L_2 = 3.33\times10^{-5}$ and $L_3 = L_4 = 5\times10^{-5}$ we have an LRU comprised of four subsystems in series, i.e. the system is operational only if all four subsystems

ORIGINAL PAGE IS
OF POOR QUALITY

are operational ($k=4$). Components in subsystems 1 and 2 have failure rate 3.33×10^{-5}/hour and components in subsystems 3 and 4 have failure rate 5×10^{-5}/hour.

The following examples have the number of components (N_i), and the minimum number necessary for operation (M_i) the same for all four subsystems. In example 1 all four systems are 8 of 9 subsystems; that is each subsystem is comprised of nine independent parts, eight of which must work for the subsystem to work.

$k=4$ Four subsystems

$L_1 = L_2 = 3.33 \times 10^{-5}$/hour
$L_3 = L_4 = 5 \times 10^{-5}$/hour
} component failure rates

Example 1. $N_i = 9$ Each subsystem is comprised of 9 components
$M_i = 8$ Each subsystem operates if 8 components work

MTBF = 2255.4 hours

E M(T) = 3.26

ACUT = 1.444×10^{-3}/hour average number of components to be repaired per unit time.

ORIGINAL PAGE IS
OF POOR QUALITY

Example 2. $N_i = 8$ $M_i = 8$

MTBF = 750.3 hours
E M(T) = 1
ACUT = 1.333×10^{-3}/hour

Example 3. $N_i = 8$ $M_i = 7$

MTBF = 2531.0 hours
E M(T) = 3.27
ACUT = 1.291×10^{-3}/hour

Example 4. $N_i = 7$ $M_i = 7$

MTBF = 857.5 hours
E M(T) = 1
ACUT = 1.166×10^{-3}/hour

ORIGINAL PAGE IS
OF POOR QUALITY

Addendum A8-1

Let $S_{i1}, \ldots, S_{iN_i}$ $i = 1, \ldots, k$ be independent exponential random variables with $ES_{ij} = 1/L_i$ $j = 1, \ldots, N_i$ $i = 1, \ldots, k$.

Let $S_i = \inf\{ t : M_i(t) \geq x_i \}$ where $x_i = N_i - M_i + 1 \geq 1$

and $M_i(t) = \sum_{j=1}^{N_i} I_{[S_{ij} \leq t]}$ = number of failures in the ith subsystem by time t.

Thus S_i is the failure time of the ith subsystem which operates as long as M_i of its N_i components operate.

Note that $P(S_i > t) = P(M_i(t) < x_i) =$

$$\sum_{j=0}^{x_i - 1} \binom{N_i}{j} [1 - \exp(-L_i t)]^j \exp[-L_i t (N_i - j)]$$

$$= \sum_{j=0}^{x_i - 1} \sum_{u=0}^{j} \binom{N_i}{j} \binom{j}{u} (-1)^u \exp[L_i t (N_i - j + u)] \qquad (A1)$$

Next introduce $T = \min(S_1, \ldots, S_k)$ = failure time of the k subsystems connected in series.

ORIGINAL PAGE IS
OF POOR QUALITY

Then $E\,T = \int_0^\infty P(T \geq t)\,dt$

$$= \int_0^\infty \prod_{i=1}^{k} P(S_i \geq t)\,dt \qquad (A2)$$

Inserting the expressions (A1) for $i=1,\ldots,k$ into (A2) and multiplying out the sums followed by integrating out the exponential terms yields

$$E\,T = \sum_{j_1=0}^{x_1-1} \cdots \sum_{j_k=0}^{x_k-1} \sum_{u_1=0}^{j_1} \cdots \sum_{u_k=0}^{j_k} \binom{N_1}{j_1} \cdots \binom{N_k}{j_k} \binom{j_1}{u_1} \cdots \binom{j_k}{u_k} \frac{(-1)^{u_1+\cdots+u_k}}{\sum_{i=1}^{k} L_i(N_i+u_i-j_i)} \qquad (A3)$$

Next let $M(t) = \sum_{i=1}^{k} M_i(t) = \sum_{i=1}^{k} \sum_{j=1}^{N_i} I_{[S_{ij} \leq t]}$

$=$ number of failures in the total system by time t.

$M(T)$ = number of failures in the total system at the random time T when the total system fails.

Note that $E(M(T)\,|\,T=t) = \sum_{i=1}^{k} \sum_{j=1}^{N_i} P(S_{ij} \leq t\,|\,T=t)$

$$= \sum_{i=1}^{k} N_i\, P(S_{i1} \leq t\,|\,T=t)$$

hence $E\,M(T) = \sum_{i=1}^{k} N_i\, P(S_{i1} \leq T) \qquad (A4)$

ORIGINAL PAGE IS
OF POOR QUALITY

Next note $P(S_{11} \le T) = \int_0^\infty P(T \ge s \mid S_{11} = s)\, L_1 \exp(-L_1 s)\, ds$ (A5)

and $P(T \ge s \mid S_{11} = s) = P(S_1 \ge s, \dots, S_k \ge s \mid S_{11} = s)$

$$= P(S_1 \ge s \mid S_{11} = s) \prod_{j=2}^{k} P(S_j \ge s) \qquad (A6)$$

Further $P(S_1 \ge s \mid S_{11} = s) = P\left(\sum_{j=1}^{N_1} I_{[S_{1j} < s]} < x_1 \mid S_{11} = s \right)$

$$= P\left(\sum_{j=2}^{N_1} I_{[S_{1j} < s]} < x_1 \right)$$

$$= \sum_{j=0}^{x_1 - 1} \binom{N_1 - 1}{j} [1 - \exp(-L_1 s)]^j \exp[-L_1 s (N_1 - 1 - j)]$$

$$= \sum_{j=0}^{x_1 - 1} \sum_{u=0}^{j} \binom{N_1}{j} \binom{j}{u} (-1)^u \exp[-L_1 s (N_1 - 1 - j + u)] \frac{N_1 - j}{N_1} \qquad (A7)$$

Combining the expressions (A1) and (A7) in (A6) we multiply out the resulting sums in (A6), insert the result into (A5) and integrate out the exponential terms. We thus obtain

$$P(S_{11} \le T) = \sum_{j_1=0}^{x_1 - 1} \cdots \sum_{j_k=0}^{x_k - 1} \sum_{u_1=0}^{j_1} \cdots \sum_{u_k=0}^{j_k} \frac{L_1}{N_1} \binom{N_1}{j_1} \cdots \binom{N_k}{j_k} \binom{j_1}{u_1} \cdots \binom{j_k}{u_k} \cdot$$

$$\cdot \frac{(-1)^{u_1 + \cdots + u_k} (N_1 - j_1)}{\sum_{i=1}^{k} L_i (N_i - j_i + u_i)}$$

ORIGINAL PAGE IS
OF POOR QUALITY

Similarly we obtain in general

$$P(S_{i1} \le T) = \frac{L_i}{N_i} \sum_{j_1=0}^{x_1-1} \cdots \sum_{j_k=0}^{x_k-1} \sum_{u_1=0}^{j_1} \cdots \sum_{u_k=0}^{j_k} \binom{N_1}{j_1} \cdots \binom{N_k}{j_k} \binom{j_1}{u_1} \cdots \binom{j_k}{u_k} \frac{(-1)^{u_1+\cdots+u_k}(N_i - j_i)}{\sum_{i=1}^{k} L_i (N_i - j_i + u_i)}$$

Inserting this expression into (A4) and pulling through the summation $\sum_{i=1}^{k}$ we obtain

$$E\,M(T) = \sum_{j_1=0}^{x_1-1} \cdots \sum_{j_k=0}^{x_k-1} \sum_{u_1=0}^{j_1} \cdots \sum_{u_k=0}^{j_k} \binom{N_1}{j_1} \cdots \binom{N_k}{j_k} \binom{j_1}{u_1} \cdots \binom{j_k}{u_k} (-1)^{u_1+\cdots+u_k} \cdot \left(1 - \frac{\sum_{i=1}^{k} L_i u_i}{\sum_{i=1}^{k} L_i (N_i - j_i + u_i)}\right)$$

$$= 1 - \sum_{j_1=0}^{x_1-1} \cdots \sum_{j_k=0}^{x_k-1} \sum_{u_1=0}^{j_1} \cdots \sum_{u_k=0}^{j_k} \binom{N_1}{j_1} \cdots \binom{N_k}{j_k} \binom{j_1}{u_1} \cdots \binom{j_k}{u_k} (-1)^{u_1+\cdots+u_k} \cdot \frac{\sum_{i=1}^{k} L_i u_i}{\sum_{i=1}^{k} L_i (N_i - j_i + u_i)} \qquad (A\,i)$$

ORIGINAL PAGE IS
OF POOR QUALITY

Addendum A8-2

Some renewal theoretic results and interpretations concerning ACUT.

Consider the following setup: We have a system consisting of a finite number of components. The random life time of the system is denoted by T and at the time of system failure we observe the random number M of components that have failed. At failure the system is renewed, i.e. all its components are restored to new. (In the case of exponential component failure times only the failed components will need repair or replacement.) Repeating this procedure indefinitely at each system failure we thus create a renewal process $(T_1, M_1), (T_2, M_2), \ldots$ where T_i is the time between the $i-1$ st and i th failure of the system and M_i is the number of failed components at the i th system failure. $(T_1, M_1), (T_2, M_2)$ is assumed to be a sequence of independent and identically distributed bivariate random vectors with mean (ET, EM). To avoid trivialities we assume $ET > 0$.

Define the following counting random variables:

$N(t) = \max\{n : \sum_{i=1}^{n} T_i \le t\}$ = number of renewals in $[0, t]$.

$M(t) = \sum_{i=1}^{N(t)} M_i$ = number of components replaced in $[0, t]$.

ORIGINAL PAGE IS
OF POOR QUALITY

We can now state the following theorem pertaining to the average number of components replaced per unit time (ACUT):

Theorem: a) $\sum_{i=1}^{n} M_i / \sum_{i=1}^{n} T_i \longrightarrow EM/ET$ as $n \to \infty$ with probability 1

b) $M(t)/t \longrightarrow EM/ET$ as $t \to \infty$ with probability 1

c) $EM(t)/t \longrightarrow EM/ET$ as $t \to \infty$

Discussion: $\sum_{i=1}^{n} M_i / \sum_{i=1}^{n} T_i$ in a) can be considered as a time average over n full renewal periods, $M(t)/t$ in b) can be considered as a time average over the interval $[0,t]$ and $EM(t)/t$ in c) can be considered as the time average of the expected number of replaced components in the interval $[0,t]$. No matter which of the above average notions we adopt, in the limit (as $n \to \infty$ or $t \to \infty$) we approach the same value EM/ET.

ORIGINAL PAGE IS
OF POOR QUALITY

Proof of the theorem: a) is an immediate consequence of the strong law of large numbers.

As for b): Write

$$M(t)/t = \left(\sum_{i=1}^{N(t)} M_i / N(t) \right) \cdot \left(N(t)/t \right)$$

By standard renewal theory (Barlow and Proschan p. 167) we have $N(t)/t \to 1/ET$ as $t \to \infty$ with probability 1. Since $\sum_{i=1}^{n} M_i/n \to EM$ as $n \to \infty$ and $N(t) \to \infty$ as $t \to \infty$ with probability 1 we obtain $\sum_{i=1}^{N(t)} M_i / N(t) \to EM$ as $t \to \infty$ with probability 1, which proves b).

As for c): Note that $\{N(t)+1 = n\} = \{T_1 + \cdots + T_{n-1} \le t, T_1 + \cdots + T_n > t\}$ is independent of $M_{n+1}, M_{n+2}, \ldots$, i.e $N(t)+1$ is a stopping time for the sequence $M_1, M_2, \ldots$.

Hence by Wald's equation (Barlow and Proschan p.p. 169-1) we have

$$E\left(\sum_{i=1}^{N(t)+1} M_i \right) = EM \left(E\,N(t) + 1 \right)$$

The elementary renewal theorem (Ross pp. 40-41) yields

$$E\,N(t)/t \to 1/ET \quad \text{as } t \to \infty$$

Hence $EM(t)/t = EM(EN(t)+1)/t + EM_{N(t)+1}/t \to EM/ET$

as $t \to \infty$ q.e.d.

ORIGINAL PAGE IS
OF POOR QUALITY

Addendum A8-3

Numerical example for MTBF=ET $(k=4)$

$N_1 = \dots = N_4 = 9 \quad x_1 = \dots = x_4 = 2 \quad L_1 = L_2 = 3.33\times10^{-5} \quad L_3 = L_4 = 5\times10^{-5}$

Using expression (1) we perform the summation in steps as follows: For each combination $(j_1,\dots,j_4)$ of the indices in the outside 4 sums we perform the summation of the inside 4 sums and in the end we sum over all those sums corresponding to all combinations $(j_1,\dots,j_4)$

Combination $(j_1,\dots,j_4)$	summation of inside 4 sums
$(0,0,0,0)$	$(9L_1+9L_2+9L_3+9L_4)^{-1} = 6.6693344\times10^{2}$
$(0,0,0,1)$	$9\left[(9L_1+9L_2+9L_3+8L_4)^{-1}-(9L_1+9L_2+9L_3+9L_4)^{-1}\right] = 2.07065025\dots$
$(0,0,1,0)$	same by symmetry "
$(0,1,0,0)$	$9\left[(9L_1+8L_2+9L_3+9L_4)^{-1}-(9L_1+9L_2+9L_3+9L_4)^{-1}\right] = 1.3633446\dots\times10^{-3}$
$(1,0,0,0)$	same by symmetry "
$(1,1,0,0)$	$9^2\left[(8L_1+8L_2+9L_3+9L_4)^{-1}-(9L_1+8L_2+9L_3+9L_4)^{-1}\right.$
	$\left.-(8L_1+9L_2+9L_3+9L_4)^{-1}+(9L_1+9L_2+9L_3+9L_4)^{-1}\right] = 5.7034368\times10^{-4}$

ORIGINAL PAGE IS
OF POOR QUALITY

$(0,0,1,1)$ $\quad g^2\left[(9L_1+9L_2+8L_3+8L_4)^{-1}-(9L_1+9L_2+9L_3+8L_4)^{-1}\right.$

$\left.-(9L_1+9L_2+8L_3+9L_4)^{-1}+(9L_1+9L_2+9L_3+9L_4)^{-1}\right]=1.331703188\times10^{-2}$

$(0,1,0,1)$ $\quad g^2\left[(9L_1+8L_2+9L_3+8L_4)^{-1}-(9L_1+9L_2+9L_3+8L_4)^{-1}\right.$

$\left.-(9L_1+8L_2+9L_3+9L_4)^{-1}+(9L_1+9L_2+9L_3+9L_4)^{-1}\right]=8.714631249\times10^{-3}$

$(1,0,0,1)$ Same by symmetry "
$(1,0,1,0)$ " "
$(0,1,1,0)$ " "

$(1,1,1,0)$ $\quad g^3\left[(8L_1+8L_2+8L_3+9L_4)^{-1}-(9L_1+8L_2+8L_3+9L_4)^{-1}\right.$

$-(8L_1+9L_2+8L_3+9L_4)^{-1}-(8L_1+8L_2+9L_3+9L_4)^{-1}$

$+(9L_1+9L_2+8L_3+9L_4)^{-1}+(9L_1+8L_2+9L_3+9L_4)^{-1}$

$\left.+(8L_1+9L_2+9L_3+9L_4)^{-1}-(9L_1+9L_2+9L_3+9L_4)^{-1}\right]=5.633573749\times10^{-4}$

$(1,1,0,1)$ Same by symmetry "

ORIGINAL PAGE IS
OF POOR QUALITY

$(0,1,1,1)$ $\quad g^3[(9L_1+8L_2+8L_3+8L_4)^{-1}-(9L_1+9L_2+8L_3+8L_4)^{-1}$

$-(9L_1+8L_2+9L_3+8L_4)^{-1}-(9L_1+8L_2+8L_3+9L_4)^{-1}$

$+(9L_1+9L_2+9L_3+8L_4)^{-1}+(9L_1+9L_2+8L_3+9L_4)^{-1}$

$+(9L_1+8L_2+9L_3+9L_4)^{-1}-(9L_1+9L_2+9L_3+9L_4)^{-1}]=8.66280306\times10^{-1}$

$(1,0,1,1)$ $\quad$ same by symmetry "

$(1,1,1,1)$ $\quad g^4[(8L_1+8L_2+8L_3+8L_4)^{-1}-(9L_1+8L_2+8L_3+8L_4)^{-1}$

$-(8L_1+9L_2+8L_3+8L_4)^{-1}-(8L_1+8L_2+9L_3+8L_4)^{-1}$

$-(8L_1+8L_2+8L_3+9L_4)^{-1}+(9L_1+9L_2+8L_3+8L_4)^{-1}$

$+(8L_1+8L_2+9L_3+9L_4)^{-1}+(9L_1+8L_2+9L_3+8L_4)^{-1}$

$+(9L_1+8L_2+8L_3+9L_4)^{-1}+(8L_1+9L_2+9L_3+8L_4)^{-1}$

$+(8L_1+9L_2+8L_3+9L_4)^{-1}-(9L_1+9L_2+9L_3+8L_4)^{-1}$

$-(9L_1+9L_2+8L_3+9L_4)^{-1}-(9L_1+8L_2+9L_3+9L_4)^{-1}$

$-(8L_1+9L_2+9L_3+9L_4)^{-1}+(9L_1+9L_2+9L_3+9L_4)^{-1}]=7.6999896\times10^{-1}$

ORIGINAL PAGE IS
OF POOR QUALITY

15

Summing these 16 sums $(6.6693344 \times 10^2 + \cdots + 7.6999896 \times 10^1)$

yields $ET = 2255.449896 \simeq 2255.4$

whereas for $k=4$ $N_1 = \cdots = N_4 = 8$ $x_1 = \cdots = x_4 = 1$ and same L_i we obtain

$$ET = \left(\sum_{i=1}^{4} L_i N_i\right)^{-1} = 750.30012 \simeq 750.3$$

For the case $k=4$ $N_1 = \cdots = N_4 = 8$ $x_1 = \cdots = x_4 = 2$ and L_i as before

we obtain in the same manner (replacing 8 and 9 by 7 and 8 in the above detailed evaluation of the 16 inside sums)

$$ET = 2530.981077 \simeq 2531.0$$

whereas for $k=4$ $N_1 = \cdots = N_4 = 7$ $x_1 = \cdots = x_4 = 1$ and same L_i we get

$$ET = \left(\sum_{i=1}^{4} L_i N_i\right)^{-1} = 857.4858515 \simeq 857.5$$

ORIGINAL PAGE IS
OF POOR QUALITY

Numerical example for $EM(T)$ $(k=4)$

$N_1 = \cdots = N_4 = 3 \quad x_1 = \cdots = x_4 = 2 \quad L_1 = L_2 = 3.33 \times 10^{-5} \quad L_3 = L_4 = 5 \times 10^{-5}$

Using expression (2) we perform the summation in steps as follows: For each combination $(j_1, \ldots, j_4)$ of the indices in the outside 4 sums we perform the summation of the inside 4 sums and in the end we sum over all those sums corresponding to all combinations $(j_1, \ldots, j_4)$.

Combination $(j_1, \ldots, j_4)$	Summation of inside 4 sums
$(0,0,0,0)$	0
$(0,0,0,1)$	$-L_4(L_1+L_2+L_3+L_4)^{-1} = -.300120048$
$(0,0,1,0)$	same by symmetry "
$(1,0,0,0)$	$-L_1(L_1+L_2+L_3+L_4)^{-1} = -.199879952$
$(0,1,0,0)$	same by symmetry "
$(1,1,0,0)$	$g^2[-L_1(9L_1+8L_2+9L_3+9L_4)^{-1} - L_2(8L_1+9L_2+9L_3+9L_4)^{-1} + (L_1+L_2)(9L_1+9L_2+9L_3+9L_4)^{-1}] = -.08171887766$
$(0,1,1,1)$	$g^2[-L_3(9L_1+9L_2+9L_3+8L_4)^{-1} - L_4(9L_1+9L_2+8L_3+9L_4)^{-1} + (L_3+L_4)(9L_1+9L_2+9L_3+9L_4)^{-1}] = -.18635852 41$

ORIGINAL PAGE IS
OF POOR QUALITY

$(1,0,0,1)$ $\quad g^2\big[-L_1(9L_1+9L_2+9L_3+8L_4)^{-1}-L_4(8L_1+9L_2+9L_3+9L_4)^{-1}$
$+(L_1+L_4)(9L_1+9L_2+9L_3+9L_4)^{-1}\big] \quad = -.123407895\,9$

$(0,1,0,1)$ Same by symmetry "
$(0,1,1,0)$ " "
$(1,0,1,0)$ " "

$(1,1,1,0)$ $\quad g^3\big[-L_1(9L_1+8L_2+8L_3+9L_4)^{-1}-L_2(8L_1+9L_2+8L_3+9L_4)^{-1}$
$-L_3(8L_1+8L_2+9L_3+9L_4)^{-1}+(L_1+L_2)(9L_1+9L_2+8L_3+9L_4)^{-1}$
$+(L_1+L_3)(9L_1+8L_2+9L_3+9L_4)^{-1}+(L_2+L_3)(8L_1+9L_2+9L_3+9L_4)^{-1}$
$-(L_1+L_2+L_3)(9L_1+9L_2+9L_3+9L_4)^{-1}\big] \quad = -.077903\,9327$

$(1,1,0,1)$ Same by symmetry "

$(0,1,1,1)$ $\quad g^3\big[-L_2(9L_1+9L_2+8L_3+8L_4)^{-1}-L_3(9L_1+8L_2+9L_3+8L_4)^{-1}$
$-L_4(9L_1+8L_2+8L_3+9L_4)^{-1}+(L_2+L_3)(9L_1+9L_2+9L_3+8L_4)^{-1}$
$+(L_2+L_4)(9L_1+9L_2+8L_3+9L_4)^{-1}+(L_3+L_4)(9L_1+8L_2+9L_3+9L_4)^{-1}$
$-(L_2+L_3+L_4)(9L_1+9L_2+9L_3+9L_4)^{-1}\big] \quad = -.118342827\,4$

$(1,0,1,1)$ Same by symmetry "

ORIGINAL PAGE IS
OF POOR QUALITY

$(1,1,1,1)$ $9^4[- L_1(9L_1+8L_2+8L_3+8L_4)^{-1} - L_2(8L_1+9L_2+8L_3+8L_4)^{-1}$
$- L_3(8L_1+8L_2+9L_3+8L_4)^{-1} - L_4(8L_1+8L_2+8L_3+9L_4)^{-1}$
$+(L_1+L_2)(9L_1+9L_2+8L_3+8L_4)^{-1} + (L_3+L_4)(8L_1+8L_2+9L_3+9L_4)^{-1}$
$+(L_1+L_3)(9L_1+8L_2+9L_3+8L_4)^{-1} + (L_1+L_4)(9L_1+8L_2+8L_3+9L_4)^{-1}$
$+(L_2+L_3)(8L_1+9L_2+9L_3+8L_4)^{-1} + (L_2+L_4)(8L_1+9L_2+8L_3+9L_4)^{-1}$
$-(L_1+L_2+L_3)(9L_1+9L_2+9L_3+8L_4)^{-1} - (L_1+L_2+L_4)(9L_1+9L_2+8L_3+9L_4)^{-1}$
$-(L_1+L_3+L_4)(9L_1+8L_2+9L_3+9L_4)^{-1} - (L_2+L_3+L_4)(8L_1+9L_2+9L_3+9L_4)^{-1}$
$+(L_1+L_2+L_3+L_4)(9L_1+9L_2+9L_3+9L_4)^{-1}] = -.102627162$

Summing these 16 intermediate sums we obtain

$0+(-3.00120048)+\cdots+(-.102627162) = -2.256823667$

which yields $E\,M(T) = 1-(-2.256823667) = 3.256823667 \simeq 3.26$

hence $ACUT = E\,M(T)/MTBF = 1.443979613\times10^{-3} \simeq 1.444\times10^{-3}$

For the case $k=4$ $N_1=\cdots=N_4=8$ $x_1=\cdots=x_4=1$ and L_i as before we have $E\,M(T)=1$ (trivially)
which yields $ACUT = 1.3328\times10^{-3} \simeq 1.333\times10^{-3}$

For the case $k=4$ $N_1=\cdots=N_4=8$ $x_1=\cdots=x_4=2$ and L_i as before we obtain in the same manner (replacing 8 and 9 by 7 and 8 in the above detailed evaluation of the 16 inside sums)

ORIGINAL PAGE IS
OF POOR QUALITY

$E\ M(T) = 3.266362621 \simeq 3.266$

hence $ACUT = E\ M(T) / MTBF = 1.290551972 \times 10^{-3}$
$\simeq 1.291 \times 10^{-3}$

whereas for the case $N_1 = \cdots = N_4 = 7$ $x_1 = \cdots = x_4 = 1$ and L_i as before we have $E\ M(T) = 1$

which yields $ACUT = 1.1662 \times 10^{-3} \simeq 1.166 \times 10^{-3}$.

ORIGINAL PAGE IS
OF POOR QUALITY

The remainder of appendix VIII consists of output from the reliability simulation and a listing of the program.

ORIGINAL PAGE IS
OF POOR QUALITY

```
 79/08/11. 12.23.14.
EKS2 175D.N0460.41B  79/08/05.DS-0    20.21.28. 79/08/09.
```

```
TERMINAL       5, TTY
RECOVER/USER ID: j rose

N>call,box

INPUT THE TOTAL NUMBER OF BOX FAILURES TO BE RUN
(SUGGEST A MINIMUM OF 1000)

I>10000


THERE ARE 4 DIFFERENT TYPES OF COMPONENTS (CLOCK, CPU, MEMORY, AND I/O PORT
EACH TYPE HAS 9 COMPONENTS, SEVEN OF WHICH MUST BE OPERATING FOR THE BOX TO
OPERATE

COMPONENT      MEAN TIME BETWEEN FAILURES
---------      --------------------------

CLOCK                30000 HOURS
CPU                  20000 HOURS
MEMORY               20000 HOURS
I/O PORT             30000 HOURS


                  <<<<<<<<>>>>>>>
                  <<           >>
                  <<  RESULTS  >>
                  <<           >>
                  <<<<<<<<>>>>>>>


TOTAL BOX OPERATING HOURS =  2560.2470 YEARS (22427764.1456 HOURS)

                     TOTAL NUMBER OF FAILURES OF THE BOX = 10000
MINIMUM NUMBER OF COMPONENTS FAILED WHEN THE BOX FAILED =     2
MAXIMUM NUMBER OF COMPONENTS FAILED WHEN THE BOX FAILED =     5
AVERAGE NUMBER OF COMPONENTS FAILED WHEN THE BOX FAILED =     3.2489
                       TOTAL NUMBER OF COMPONENTS FAILED = 32489


                 REMOVAL RATE                NUMBER OF     FAILURES AS
COMPONENT    (REMOVALS/OPERATING HOUR)       FAILURES      % OF TOTAL
---------    -------------------------       ---------     -----------

CLOCK              2.85584E-04                  6405          19.71
CPU                4.34640E-04                  9748          30.00
MEMORY             4.29780E-04                  9639          29.67
I/O PORT           2.98603E-04                  6697          20.61

BOX REMOVAL RATE =  4.45876E-04 REMOVALS/OPERATING HOUR


COMMENT.RUN COMPLETE
N>bye

 JOB PROCESSING CRUS     3.579
 TOTAL JOB PROPRIETARY CRUS        3.272
 JOB PRINTING CRUS       0.434
BYE  79/08/11. 12.25.47.
```

ORIGINAL PAGE IS
OF POOR QUALITY

```
''TITLE:    BOX RELIABILTY SIMULATION
''ANALYST:    JIM WASSAL
''ENGINEER:   JOHN ROSE
''DATE:     JULY,1979
''ABSTRACT:THIS PROGRAM SIMULATES 4 DIFFERENT STAGES OF A
''          HYPOTHETICAL FTMP WITH 9 COMPONENTS PER STAGE. 8 OF THE 9
''          COMPONENTS IN EACH STAGE MUST BE OPERATIVE FOR DISPATCH.
''
''
''
''
PREAMBLE
  NORMALLY, MODE IS INTEGER
  PERMANENT ENTITIES
    EVERY TYPE HAS A MTBF, A NUMBER.FAILED AND A TOT.FAILED
      DEFINE MTBF AS A REAL VARIABLE
    EVERY TYPE AND UNIT HAS A STATUS AND A TIME.TO.FAILURE
      DEFINE TIME.TO.FAILURE AS A REAL VARIABLE
  EVENT NOTICES
    EVERY FAILURE HAS A TYPE.FAILING AND A UNIT.FAILING
  DEFINE LIMIT, MAX.FAILURES, COMPONENTS.FAILED,
         SUM.OF.COMPONENTS.FAILED, TOTAL.FAILURES AS INTEGER VARIABLES
  TALLY MIN.COMPONENTS.FAILED AS THE MINIMUM,
        MAX.COMPONENTS.FAILED AS THE MAXIMUM,
        AVG.COMPONENTS.FAILED AS THE AVERAGE AND
        TOT.COMPONENTS.FAILED AS THE SUM OF COMPONENTS.FAILED
  DEFINE GOOD     TO MEAN 1
  DEFINE BAD      TO MEAN 0
  DEFINE EXCEEDED TO MEAN 1
  DEFINE RESET    TO MEAN 0
END ''OF PREAMBLE
```

ORIGINAL PAGE IS
OF POOR QUALITY

```
MAIN
  DEFINE FIRST.FAILURE AS A REAL VARIABLE
  USE UNIT 7 FOR OUTPUT
  PRINT 3 LINES THUS
INPUT THE TOTAL NUMBER OF BOX FAILURES TO BE RUN
(SUGGEST A MINIMUM OF 1000)

  READ LIMIT
  SKIP 2 LINES
  CREATE EACH TYPE(4) AND UNIT(9)
  PRINT 20 LINES THUS
THERE ARE 4 DIFFERENT TYPES OF COMPONENTS (CLOCK, CPU, MEMORY, AND I/O
 PORT)
EACH TYPE HAS 9 COMPONENTS, SEVEN OF WHICH MUST BE OPERATING FOR THE B
OX TO
OPERATE

COMPONENT      MEAN TIME BETWEEN FAILURES
---------      --------------------------

CLOCK                30000 HOURS
CPU                  20000 HOURS
MEMORY               20000 HOURS
I/O PORT             30000 HOURS


                  <<<<<<<<<>>>>>>>>>
                  <<                >>
                  <<   RESULTS     >>
                  <<                >>
                  <<<<<<<<<>>>>>>>>>


  LET MTBF(1) = 3
  LET MTBF(2) = 2
  LET MTBF(3) = 2
  LET MTBF(4) = 3
  LET FIRST.FAILURE = RINF.C
  FOR EACH TYPE, FOR EACH UNIT,
  DO
    LET STATUS(TYPE,UNIT) = GOOD
    LET TIME.TO.FAILURE(TYPE,UNIT) = EXPONENTIAL.F(MTBF(TYPE),3)
    IF TIME.TO.FAILURE(TYPE,UNIT) < FIRST.FAILURE,
      LET FIRST.FAILURE = TIME.TO.FAILURE(TYPE,UNIT)
    ALWAYS
  LOOP
  FOR EACH TYPE, FOR EACH UNIT,
    SCHEDULE A FAILURE GIVING TYPE AND UNIT
               IN TIME.TO.FAILURE(TYPE,UNIT) - FIRST.FAILURE HOURS
  START SIMULATION
END ''OF MAIN ROUTINE
```

ORIGINAL PAGE IS
OF POOR QUALITY

```
EVENT FAILURE GIVEN TYPE AND UNIT
  IF TOTAL.FAILURES >= LIMIT,
    PRINT 7 LINES WITH TIME.V*10000/365, TIME.V*240000, LIMIT,
                  MIN.COMPONENTS.FAILED, MAX.COMPONENTS.FAILED,
                  AVG.COMPONENTS.FAILED, TOT.COMPONENTS.FAILED THUS
TOTAL BOX OPERATING HOURS =      *.**** YEARS (       *.**** HOURS)

                      TOTAL NUMBER OF FAILURES OF THE BOX =      *
MINIMUM NUMBER OF COMPONENTS FAILED WHEN THE BOX FAILED =      *
MAXIMUM NUMBER OF COMPONENTS FAILED WHEN THE BOX FAILED =      *
AVERAGE NUMBER OF COMPONENTS FAILED WHEN THE BOX FAILED =      *.****
                        TOTAL NUMBER OF COMPONENTS FAILED =      *
    SKIP 3 LINES
    PRINT 12 LINES WITH TOT.FAILED(1)/TIME.V/240000, TOT.FAILED(1),
             TOT.FAILED(1)/TOT.COMPONENTS.FAILED*100,
             TOT.FAILED(2)/TIME.V/240000, TOT.FAILED(2),
             TOT.FAILED(2)/TOT.COMPONENTS.FAILED*100,
             TOT.FAILED(3)/TIME.V/240000, TOT.FAILED(3),
             TOT.FAILED(3)/TOT.COMPONENTS.FAILED*100,
             TOT.FAILED(4)/TIME.V/240000, TOT.FAILED(4),
             TOT.FAILED(4)/TOT.COMPONENTS.FAILED*100, LIMIT/TIME.V/240
000 THUS
                    REMOVAL RATE              NUMBER OF      FAILURES AS
COMPONENT     (REMOVALS/OPERATING HOUR)       FAILURES       % OF TOTAL
---------     -------------------------       ---------      -----------

CLOCK                 .............             *****           **.**
CPU                   .............             *****           **.**
MEMORY                .............             *****           **.**
I/O PORT              .............             *****           **.**

BOX REMOVAL RATE = ............. REMOVALS/OPERATING HOUR


    STOP
  ELSE
  LET STATUS(TYPE,UNIT) = BAD
  ADD 1 TO NUMBER.FAILED(TYPE)
  ADD 1 TO TOT.FAILED(TYPE)
  IF NUMBER.FAILED(TYPE) = 2 OR MAX.FAILURES = EXCEEDED,
    FOR EACH SAME.TIME.FAILURE IN EV.S(I.FAILURE),
                  WITH TIME.A(SAME.TIME.FAILURE) = TIME.V,
             FIND THE FIRST CASE
    IF FOUND,
      LET MAX.FAILURES = EXCEEDED
      RETURN
    ELSE
    LET MAX.FAILURES = RESET
    ADD 1 TO TOTAL.FAILURES
    FOR EACH TYPE,
    DO
      ADD NUMBER.FAILED(TYPE) TO SUM.OF.COMPONENTS.FAILED
      LET NUMBER.FAILED(TYPE) = 0
      ALSO FOR EACH UNIT, WITH STATUS(TYPE,UNIT) = BAD,
      DO
        LET STATUS(TYPE,UNIT) = GOOD
        SCHEDULE A FAILURE GIVING TYPE AND UNIT
                  IN EXPONENTIAL.F(MTBF'TYPE),3) HOURS
    LOOP
    LET COMPONENTS.FAILED = SUM.OF.COMPONENTS.FAILED
    LET SUM.OF.COMPONENTS.FAILED = 0
  ALWAYS
  RETURN
END ''OF EVENT FAILURE
```

APPENDIX IX

HYPOTHETICAL FTMP COST AND BENEFIT ANALYSIS

An example is provided in this appendix of a Cost and Benefit Analysis of two hypothetical configurations for Fault Tolerant Multiprocessors (FTMP). The first configuration FTMP9, consists of 4 stages with 9 components in parallel in each stage and a requirement that at least 8 out of 9 components in each stage must be operating for dispatch. The second configuration, FTMP8, also consists of 4 stages but all 8 components of each stage are required for dispatch (i.e., no replication for dispatch reliability).

The question to be answered is "Does FTMP9 justify the additional investment required?"

For the example, it was assumed that FTMP8 or FTMP9 are required for an active control system which results in 2964 and 2960 pound reductions in structural weight for the respective alternatives.

The current version of ACES was used for the analysis. Removal rates used for FTMP9 were derived in appendix VIII. While there are a number of shortcomings in the current ACES type of analysis, the analysis does serve to indicate the advantages of replication and importance of accurately assessing delay, cancellation, and spares cost, which turn out to be very significant in the sample analysis. Note that ACES in its present form does not answer the question "Are the weight savings benefits of either scheme economically justified?" and in any event a total Fault Tolerant Active Control System Analysis would be necessary for this purpose.

****

DESIGN TOTAL COST OF OWNERSHIP SUMMARY

PROGRAM TEC038
VERSION C038G1
RUN DATE 08/10/79

ORIGINAL PAGE IS
OF POOR QUALITY

****

ANALYST OHARE/7-0102/9R-27. AIRPLANE MODEL 767

INVESTMENT ASSUMPTIONS FOR CASE FTMP8 OF DESIGN FLT-CNTRL

BASE YEAR FOR EQUIVALENT VALUE	1979				
TAX RATE	50.00 PER CENT				
INVESTMENT TAX CREDIT RATE	10.00 PER CENT				
TAX DEPRECIATION LIFE	10 YEARS				
USEFUL LIFE OF PROJECT	15 YEARS				
EQUIPMENT LIFE	20 YEARS				
FLEET SIZE/YEAR	9.	21.	30.	...	30.
INFLATION RATE/YEAR	8.00	8.00	8.00	...	8.00
MIN. ATTR. RATE OF RET./YEAR	15.00	15.00	15.00	...	15.00

COST ANALYSIS - (SEE D6-42875 FOR DEFINITIONS)

ENTITY	CUMULATIVE CASH FLOW	CUM. PRESENT EQ. VAL(PEX)	PEX PC OF IC+OC	PEX. AV. DOLLARS/ FLT. HR.
INVESTMENTS:				
AIRPLANE	-1740896.	-1512925.	*****	-1.35
ROTABLE SPARES	-292058.	-250831.	-66.7	-.22
EXPENDABLE SPARES	-342.	-342.	-.1	-.00
GROUND EQUIPMENT	0.	0.	0.0	0.00
SPECIAL TOOLS	0.	0.	0.0	0.00
BUILDINGS	0.	0.	0.0	0.00
RAMP EQUIPMENT	0.	0.	0.0	0.00
TRAINING EQUIPMENT	-10000.	-10000.	-2.7	-.01
MAINTENANCE MANUALS	0.	0.	0.0	0.00
OTHER	0.	0.	0.0	0.00
OPERATING COSTS:				
MAINTENANCE LABOR	-211136.	-72153.	-19.2	-.06
MAINTENANCE MATERIAL	-284406.	-97372.	-25.9	-.09
MAINTENANCE BURDEN	-441597.	-151089.	-40.1	-.14
SPARES HOLDING	-698534.	-240781.	-64.0	-.22
MAINTENANCE TRAINING	-32215.	-16356.	-4.3	-.01
FUEL/WEIGHT	12357833.	4156416.	*****	3.72
DELAYS/CANCELLATIONS	-3931561.	-1378459.	*****	-1.23
AIRPLANE INSURANCE	-121461.	-49794.	-13.2	-.04
OTHER	0.	0.	0.0	0.00
RETIREMENT COST:				
NET CREDIT	0.	0.		0.00
TAXATION:				
INVEST. TAX CREDIT	184532.	162528.		.15
DEPRECIATION CREDIT	1021477.	621815.		.56
INCOME TAX BENEFIT	-3318462.	-1075207.		-.96
TOTAL	2481174.	85451.	100.0	

ORIGINAL PAGE IS
OF POOR QUALITY

****

DESIGN TOTAL COST OF OWNERSHIP SUMMARY

PROGRAM TEC038
VERSION C038G1
RUN DATE 08/10/79

****

ANALYST OHARE/7-0102/9R-27. AIRPLANE MODEL 767

INVESTMENT ASSUMPTIONS FOR CASE FTMP9 OF DESIGN FLT-CNTRL

BASE YEAR FOR EQUIVALENT VALUE	1979				
TAX RATE	50.00 PER CENT				
INVESTMENT TAX CREDIT RATE	10.00 PER CENT				
TAX DEPRECIATION LIFE	10 YEARS				
USEFUL LIFE OF PROJECT	15 YEARS				
EQUIPMENT LIFE	20 YEARS				
FLEET SIZE/YEAR	9.	21.	30.	...	30.
INFLATION RATE/YEAR	8.00	8.00	8.00	...	8.00
MIN. ATTR. RATE OF RET./YEAR	15.00	15.00	15.00	...	15.00

COST ANALYSIS - (SEE D6-42875 FOR DEFINITIONS)

ENTITY	CUMULATIVE CASH FLOW	CUM. PRESENT EQ. VAL(PEX)	PEX PC OF IC+OC	PEX. AV. DOLLARS/ FLT. HR.
INVESTMENTS:				
AIRPLANE	-1978291.	-1719232.	*****	-1.54
ROTABLE SPARES	-162303.	-141043.	-10.4	-.13
EXPENDABLE SPARES	-374.	-374.	-.0	-.00
GROUND EQUIPMENT	0.	0.	0.0	0.00
SPECIAL TOOLS	0.	0.	0.0	0.00
BUILDINGS	0.	0.	0.0	0.00
RAMP EQUIPMENT	0.	0.	0.0	0.00
TRAINING EQUIPMENT	-10000.	-10000.	-.7	-.01
MAINTENANCE MANUALS	0.	0.	0.0	0.00
OTHER	0.	0.	0.0	0.00
OPERATING COSTS:				
MAINTENANCE LABOR	-77224.	-26390.	-2.0	-.02
MAINTENANCE MATERIAL	-310234.	-106215.	-7.9	-.10
MAINTENANCE BURDEN	-367728.	-125862.	-9.3	-.11
SPARES HOLDING	-392917.	-136019.	-10.1	-.12
MAINTENANCE TRAINING	-32215.	-16356.	-1.2	-.01
FUEL/WEIGHT	12341156.	4150807.	307.3	3.72
DELAYS/CANCELLATIONS	-1317607.	-461971.	-34.2	-.41
AIRPLANE INSURANCE	-138024.	-56584.	-4.2	-.05
OTHER	0.	0.	0.0	0.00
RETIREMENT COST:				
NET CREDIT	0.	0.		0.00
TAXATION:				
INVEST. TAX CREDIT	194489.	171488.		.15
DEPRECIATION CREDIT	1075297.	655651.		.59
INCOME TAX BENEFIT	-4852604.	-1610705.		-1.44
TOTAL	3971422.	567195.	100.0	

ORIGINAL PAGE IS
OF POOR QUALITY

INVESTMENT ANALYSIS -

DESIGN FLT-CNTRL

COMPARISON OF CASE FTMP9 AND CASE FTMP8

ENTITY:	CUMULATIVE CASH FLOW	CUM.PRESENT EQUIV.VALUE	CUMULATIVE CASH FLOW	CUM.PRESENT EQUIV.VALUE
INVESTMENT	-2150967.	-1870649.	-2043296.	-1774098.
OPERATING	9705207.	3221410.	6636924.	2150413.
RETIREMENT	0.	0.	0.	0.
TAX	-3582818.	-783566.	-2112453.	-290864.
TOTAL	3971422.	567195.	2481174.	85451.

COMPARISON OF CASE FTMP9 MINUS CASE FTMP8

ENTITY:	CUMULATIVE CASH FLOW DIFFERENCE	CUM.PRESENT EQUIV.VALUE DIFFERENCE
INVESTMENT	-107671.	-96551.
OPERATING	3068283.	1070997.
RETIREMENT	0.	0.
TAX	-1470365.	-492703.
TOTAL	1490248.	481744.

INVESTMENT IN CASE FTMP9 INSTEAD OF CASE FTMP8

YEARS TO PAYBACK PRES.EQ.VAL. OF CASH			1.97		
EXTRA RETURN ON INVESTMENT			12.67		
MINIMUM ATTRACTIVE RATE OF RETURN	15.00	15.00	15.00	...	15.00
COMBINED RATE OF RETURN	27.67	27.67	27.67	...	27.67

APPENDIX X

Partition Theory for Counting Possible Packaging Schemes

With the advent of inexpensive, large and very large scale integration and the geometrically increasing cost of maintenance labor, the widespread application of throwaway and/or replacement modules is just around the corner. This will permit more freedom than heretofore to package avionics systems such as the fault-tolerant flight control system, FTFCS. Other innovations will also be seen such as actuators, sensors, and specialized computers packaged as a unit. Optimization of packaging is a very relevant consideration for the FTFCS and this appendix addresses the problem of determining the number of unconstrained packaging arrangements which can be made from N components. How many ways a group or N components can be packaged is treated by an application of combinatorial mathematics. The number of distinct ways N different objects may be arranged is N! If N(1) are of one category, N(2) are another, and so on, then the number of distinct patterns becomes

ORIGINAL PAGE IS
OF POOR QUALITY

$$\frac{N!}{N(1)!N(2)!\ \ldots\ N(K)!}, \text{ where}$$

$$N(1) + N(2) + \ldots N(K) = N$$

However, if $N(I) = N(J) \neq 1$, then the relationship becomes

$$\frac{N!/2^{**}Q}{N(1)!\ N(2)!\ \ldots\ N(K)!}$$

where there are Q pairs, triplets, or n-tuples. A simple illustration will demonstrate the principles involved.

ORIGINAL PAGE IS
OF POOR QUALITY

Consider four objects A, B, C and D.

Partitions	Package	No. of Distinct Packagings
4	ABCD	1
3+1	A-BCD	$\frac{4!}{3!\ 1!} = 4$
	B-ACD	
	C-ABD	
	D-ABC	
2+2	AB-CD	$\frac{4!/2}{2!\ 2!} = 3$
	AC-BD	
	AD-BC	
2+1+1	AB-C-D	$\frac{4!}{2!\ 2!} = 6$
	AC-B-D	
	AD-B-C	
	A-B-CD	
	A-C-BD	
	A-D-BC	
1+1+1+1	A-B-C-D	1
	TOTAL	15

The calculations for N = 1 through 6 are shown below.

ORIGINAL PAGE IS
OF POOR QUALITY

N	Partitions	Examples	Packagings		Total
1	1	A		1	
2	2	AB		1	
	1+1	A-B		1	
					2
3	3	ABC		1	
	2+1	AB-C	3!/2!1!	= 3	
	1+1+1	A-B-C		1	
					5
4	4	ABCD		1	
	3+1	ABC-D	4!/3!	= 4	
	2+2	AB-CD	4!/2!2!2!	= 3	
	2+1+1	AB-C-D	4!/2!1!1!	= 6	
	1+1+1+1	A-B-C-D		1	
					15
5	5	ABCDE		1	
	4+1	A-BCDE	5!/4!1!	= 5	
	3+2	ABC-DE	5!/3!2!	= 10	
	3+1+1	ABC-D-E	5!/3!2!	= 10	
	2+2+1	AB-CD-E	5!/2!2!2!	= 15	
	2+1+1+1	AB-C-D-E	5!/2!3!	= 10	
	1+1+1+1+1	A-B-C-D-E		1	
					52

ORIGINAL PAGE IS
OF POOR QUALITY

6	6	ABCDEF			1
	5+1	A-BCDEF	6!/5!1!	=	6
	4+2	ABCD-EF	6!/4!2!	=	15
	4+1+1	ABCD-E-F	6!/4!2!	=	15
	3+3	ABC-DEF	6!/2!3!3!	=	10
	3+2+1	ABC-DE-F	6!/3!2!1!	=	60
	3+1+1+1	ABC-D-E-F	6!/3!3!	=	20
	2+2+2	AB-CD-EF	6!/2!2!2!3!	=	45
	2+2+1+1	AB-CD-E-F	6!/2!2!2!2!	=	45
	2+1+1+1+1	AB-C-D-E-F	6!/2!4!	=	15
	1+1+1+1+1+1	A-B-C-D-E-F			1
					233

The enumeration was also performed for N=7 and 8, with the results tabled thus:

No. of Components, N	No. of Distinct Packagings, D
1	1
2	2
3	5
4	15
5	52
6	233
7	1087
8	8094

An approximate relationship for $N \geq 4$ is given as $D(N) = \exp(\exp(.2 + N/4))$. Using this relationship for N=10 produces 2,898,000 different packaging alternatives.

In the year 1935, H. Gupta published a table of partitions in the Proceedings of the London Mathematics Society, Volume 39, pp. 142-149. This table does not solve our problem directly, because it provides only the number of partitions. For example with 6 objects, there are 11 partitions and 233 packagings. However, Gupta provides a useful asymtotic relationship on the number of partitions, P(N). This is, with Pi = 3.14159...,

$$P(N) = (1/(4N \text{ SQRT } (3)) \exp(\text{Pi SQRT } (2N/3))$$

Since the number of packagings is given by $D(N) = \exp(\exp(.2 + N/4))$, then the average number of packagings per partition, X(N), would be given by

$$X(N) = D(N)/P(N)$$
$$= 4N \text{ SQRT } (3) \exp(\exp(.2 + N/4) - \text{Pi SQRT } (2N/3))$$

with P(N) from Gupta's tables,

D(N), the number of packagings = $P(N) \cdot X(N)$

For N = 20, P(N), from table 1, is 627

ORIGINAL PAGE IS
OF POOR QUALITY

Substituting N=20, one obtains

$$D(N) = 627 \cdot 80 \text{ SQRT } (3) \exp(\exp(5.2) - \text{Pi SQRT } (40/3))$$
$$= 4.82 \cdot 10^{78}$$

For very modest numbers of objects, the number of packaging schemes is astronomical. If it were possible to cost out 1 million packagings per nanosecond, it would take 2.04×10^{61} years for only 20 objects! The key to a practical solution is to observe that although there are an enormous number of unconstrained packagings permitted, as soon as practical constraints are introduced, the number of possibilities is greatly reduced to a much smaller and, hopefully, manageable quantity. We believe due to the relatively small size of the FTFCS, whose components are to be packaged in half-ATR boxes or smaller, that installation costs and the costs of gaining access to malfunctioning devices are virtually independent of packaging. The major cost element will be for spares inventory. Practical constraints which tend to restrict packaging freedom are items such as:

- Shielding requirements

  Components requiring shielding usually are isolated.
- Power consumption differences

  Power and signal level components are usually isolated.
- Failure rate disparities

High failure modules should not be packaged with low failure ones.

- Maintenance approaches

  It is unwise to mix rotables with nonrotables and locally repairable modules should not be copackaged with depot- or vendor-repairable modules.

- Shock-mounting

  Only those modules requiring this should be copackaged.

- Cooling and heat sinking
- Functional testing

ORIGINAL PAGE IS
OF POOR QUALITY

TABLE 1

No. of Partitions, P(N), of N OBJECTS vs N

(Per Gupta, op cit)

N	P(N)	N	P(N)
1	1	20	627
2	2	25	1,958
3	3	30	5,604
4	5	35	14,883
5	7	40	37,338
6	11	45	89,134
7	15	50	204,226
8	22	55	451,276
9	30	60	966,467
10	42	65	2,012,558
11	56	70	4,087,968
12	77	75	8,118,264
13	101	80	15,796,476
14	135	90	56,634,173
15	176	100	190,569,292

ORIGINAL PAGE IS
OF POOR QUALITY

APPENDIX XI

DERIVATION OF DELAY AND CANCELLATION COSTS
(ABSTRACT FROM REFERENCE (P) D6-40895-1)

The cost of a delay (excluding work required to fix the cause) is assumed to consist of three parts:

- Crew cost for the extra time involved
- Loss of revenue from the passengers who take another airline's flight
- Passenger handling expenses such as phones, taxis, meals, and hotel accommodations.

CREW COSTS

Figure 1 shows a plot of flight crew costs for a number of airplane types and an equation for the best straight line* through the points is given by:

$\$/\text{seat hour} = 1.8 - .0028\bar{n}$

where $\bar{n}$ is the number of seats which is typical of a given airplane type.

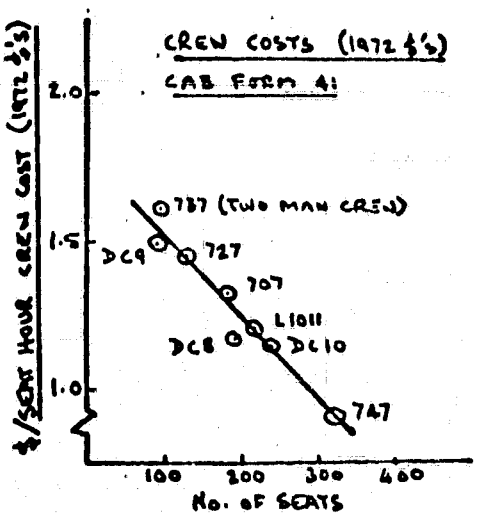

FIGURE 1

* Correlation coefficient = -.986.

ORIGINAL PAGE IS
OF POOR QUALITY

LOSS OF PASSENGER REVENUE

Figure 2 provides a plot showing the number of passengers lost from a cancellation. The curve is from a survey included in a report entitled "Cost Benefit Analysis for All-Weather Landing Systems" prepared for FAA by R. Dixon Speas Associates (October 1967, AD 661 830).

The % of passengers lost** $= 27.14e^{-.439 \times s}$ where s is the flight length in thousands of statute miles. To arrive at a delay cost the assumption is made that at some length of delay = d hours the delay will turn into a cancelled flight. Typical values of d are assumed to be:

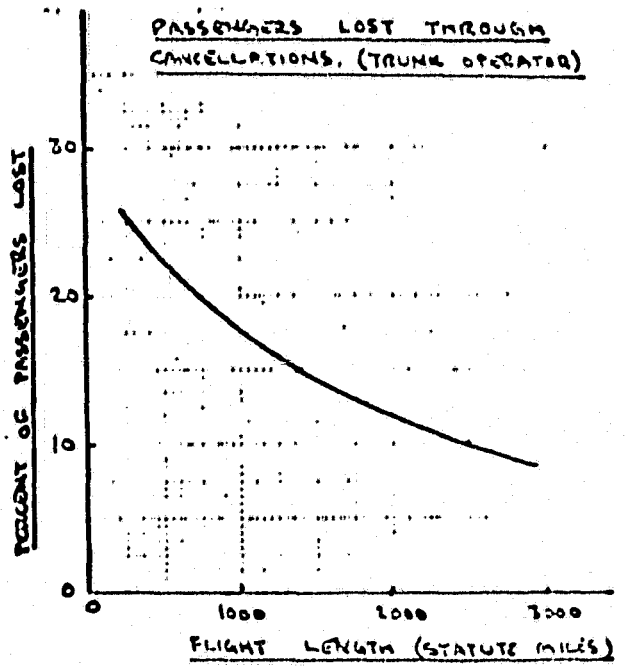

FIGURE 2

0.75 hours for high frequency short range

1.50 hours for intermediate range

3.00 hours for long range

In addition it is assumed that up to the time a cancellation occurs, the cost of a delay increases in direct proportion to the increase in delay time.

ORIGINAL PAGE IS
OF POOR QUALITY

** Correlation coefficient = -.984

ORIGINAL PAGE IS
OF POOR QUALITY

The typical revenue for a 10:90 split of first and tourist is given by:

Revenue/passenger = (4.14 + 53.3s) (1972 Dollars) where s (above) is the flight length in thousands of statute miles.

From a knowledge of the flight length, number of seats and load factor, it is thus possible to calculate the loss of revenue per passenger:

$$= \frac{27.14\, e^{-.439s}}{100 \times d} \times f \times (4.14 + 53.3\, s) \times t$$

where s = flight length in statute miles (1000's)
f = load factor (fraction of seats occupied)
d = delay time at which flights on an average are cancelled (hours)
t = delay time (hours)
e = 2.7183

The above formula gives revenue cost in 1972 dollars.

ORIGINAL PAGE IS
OF POOR QUALITY

PASSENGER HANDLING

Interrupted trip expenses reported to CAB for a domestic airline for 1972 were $1.3M. For 15% departure delays, one hour average delay time, 30M passengers carried, and a load factor of .55, the delay cost/seat due to passenger handling per hour delay.

$$= \frac{\text{Interruption expense}}{\text{Number of passengers delayed} \div \text{load factor}}$$

$$= \frac{1.32 \times 10^6}{30 \times 10^6 \times .15} \times .55$$

= $.16 per seat hour delay (1972 dollars)

ORIGINAL PAGE IS
OF POOR QUALITY

TOTAL DELAY COST

The three delay costs above can be simplified and combined to give the following expression for delay cost in 1972 dollars:

$$\text{Delay cost} = \left[1.96 - .0028\,\bar{n} + \frac{.2714\,\ell e^{-.439\,\ell s}}{d}\,(4.14\,\ell + 53.3s)\right] tn$$

where $\bar{n}$ = standard number of seats for airplane type

ℓ = load factor (fraction of seats occupied)

s = average flight length (statute miles $\div$ 1000)

t = delay time (hours)

n = number of seats fitted in a given airplane

d = delay time at which flights on an average are cancelled (hours)

e = 2.7183 (constant)

ORIGINAL PAGE IS
OF POOR QUALITY

CANCELLATION COSTS

The cost of a cancellation can be considered as a combination of the delay costs up to the time a cancellation occurs, plus the value of investment for the lost flight time while the airplane is being returned to service. An approximation to the true value of inactive time can be obtained using long-term (3 years or more) dry lease costs. Dry lease costs are typically as shown in the table below:

MODEL	MONTHLY LEASE	FLIGHT HOURS PER DAY	OEW	COST/CANCELLED FLIGHT HOUR
707-320C	$100,000	10	146,000	$333
727-100	$ 63,000	8	88,000	$250
737-200	$ 50,000	8	59,000	$200
747	$300,000	10	356,000	$1000

Thus the cost per cancelled flight hour for that portion of cost associated with inactive airplane time is about $3 per 1000 lbs. of airplane O.E.W. in 1972 dollars. Note that this value does not account for loss of goodwill or account for substitutions by an airplane of the same or different type. No satisfactory method of accounting for such substitutions has been developed.

ORIGINAL PAGE IS
OF POOR QUALITY

COMPARISON OF COSTS WITH THOSE USED BY AIRLINES

Costs estimated in 1972 dollars, using the methods of this document, compare with those quoted by several airlines and adjusted to 1972, as follows:

DELAYS (747, 1 hour delay)

Airline A	Delay Cost =	$ 85
Airline B	=	$ 420
Airline C	=	$ 525
Airline D	=	$ 840
Airline E	=	$ 1420
D6-40895-1 Estimating method	=	$ 1113

CANCELLATIONS (747, 10 hours flying lost)

Airline A	Cost =	$11,800
Airline B	=	$ 2,200
Airline C & D	=	$ Not available
Airline E	=	$ 6,300
D6-40895-1 Estimating method	=	$14,000

Model 707/727 Airline "B" Delays versus Boeing D6-40895-1 compare as follows:

Model	No of Seats	Delay Cost (1972 Dollars)					
		15' Delay *		45' Delay *		2 Hour Delay *	
		Airline	Boeing	Airline	Boeing	Airline	Boeing
707 (1)	140	95	160	265	480	1260	1280
707 (1)	180	100	206	270	617	1300	1645
727 (2)	100	90	105	220	315	950	840
727 (2)	140	95	146	235	439	1100	1170

(2) Short Range

(1) Intermediate Range

* Average Delay Length