NASA Contractor Report 3556

Technology Needs Assessment of an Atmospheric Observation System for Tropospheric Research Missions

Part 1

U. R. Alvarado, M. H. Bortner, R. N. Grenda,
G. G. Frippel, H. Halsey, S. L. Neste,
H. Kritikos, L. S. Keafer, and L. J. DeRyder

CONTRACT NAS1-16312
SEPTEMBER 1982

NASA Contractor Report 3556

Technology Needs Assessment of an Atmospheric Observation System for Tropospheric Research Missions

Part 1

U. R. Alvarado, M. H. Bortner, R. N. Grenda,
G. G. Frippel, H. Halsey, and S. L. Neste
General Electric Company
Philadelphia, Pennsylvania

H. Kritikos
University of Pennsylvania
Philadelphia, Pennsylvania

L. S. Keafer and L. J. DeRyder
Langley Research Center
Hampton, Virginia

Prepared for
Langley Research Center
under Contract NAS1-16312

National Aeronautics
and Space Administration

Scientific and Technical
Information Branch

1982

ACKNOWLEDGEMENTS

The authors gratefully acknowledge the support of the following NASA personnel in reviewing and providing technical guidance during the course of the study.

Frank Allario
Wendell Ayers
Roger Breckenridge
Ed Browell
Bill Davis
Buddy DeRyder
Jack Dodgen
Ed Harrison
Robert Hess
James Hoell
Ray Hook
Harry Orr
John Mugler
Pat McCormick
Henry Reichle
James Russell

Page Missing in
Original Document

FOREWORD

The "Technology Needs Assessment of an Atmospheric Observation System" reported in this contractor report for "Tropospheric Research Missions" and in a companion report for "Multidisciplinary Air Quality/Meteorology Missions" (NASA CR 3557, 1982) was funded by NASA's Office of Aeronautics and Space Technology to derive information necessary to guide near-term technology developmental activities in support of NASA's Office of Space Science and Applications long-term Earth environmental observation programs. The benefits of this cooperative effort should, however, extend beyond NASA and manifest themselves in technology developmental programs of other Government agencies, industry and academia.

A broad system approach was used to help assure validity of the technology assessment. This approach started with Earth observational scenarios representative of programs projected beyond the official NASA 5- and 10-year plans--to the decade of the 1990's. Representative measurement needs and missions were defined in terms of corresponding projected generic remote sensing and data management systems along with projected advanced spacecraft with their support subsystems. Technology needs were then assessed for this whole "Atmospheric Observation System." Such technology

assessments are usually subject to error from two main sources: (1) the program and mission operational assumptions and projections, and (2) the status, assumptions and projections made regarding the various technologies employed to implement the defined missions. For atmospheric observation systems, however, the results appear to be less sensitive to program projection errors than to technology projection errors. Consequently, NASA selected a large experienced technology-oriented aerospace firm to perform the assessment, and thereby has minimized the errors as much as is practical. The contractor relied primarily on published documents and NASA reviews for program inputs and primarily on company expertise for technology inputs.

The assessment studies show that both the missions dedicated to tropospheric research and the multidisciplinary air quality/meteorology missions are viable for the 1990's timeframe. They are, however, only representative of real missions which will be defined at a much later date based on the Earth environmental observation program results and potential at that time. Consequently, these reports should be used for technology needs information only and not for Earth observations program information. For program information regarding tropospheric research missions, the reader should go directly to NASA RP 1062, April 1981, on Tropospheric Program Planning or to NASA CP 2237, 1982, on Tropospheric Passive Remote Sensing, both of which were published after the work described herein was completed.

Lloyd S. Keafer, Jr.
NASA Technical Monitor

TABLE OF CONTENTS

TABLE OF CONTENTS (Cont.)

LIST OF ILLUSTRATIONS

LIST OF TABLES

SECTION 1

INTRODUCTION

SECTION 1
INTRODUCTION

This report summarizes the results of the study "Technology Needs Assessment of an Atmospheric Observation System", performed for the NASA Langley Research Center by the General Electric Company Space Systems Division, under Contract NAS 1-16312. The report covers the results of Part I of the Study, which deals with Tropospheric Research Missions. The Study period of performance for Part I was approximately eight months commencing in July 1980. Subsequent tasks are planned in Part II which will deal with the upper atmosphere and additional Earth observation disciplines. That future phase of the Study will assess expanded technology needs when space observations are made with a multi-purpose, multi-discipline type of observational system.

A primary reference document for the Study was a preliminary version of the "NASA Tropospheric Program Plan," based on the Scientific Research Objectives in Tropospheric Pollution. At the time the Study was conducted, the Program Plan which is the product of the Working Group on Tropospheric Program Planning, was in the process of review and editing for publication as an official NASA publication. The purpose of the Program Plan is to endeavor to form a scientific basis for a long-term tropospheric research program. (Note: Subsequent to this study it was published as NASA RP 1062.)

Few areas of research are as relevant to man as the environmental investigations of atmospheric air quality. More specifically, tropospheric air quality, which is the subject of this portion of the Study, significantly impacts biospheric processes due to its role in biogeochemical cycles of atmospheric gases. Remote sensing is an important mode of observation in the Study of these processes. In addition to ground and air-based remote sensing, space vehicles must be considered potentially as vital elements of an atmospheric observation system, due to the global nature and frequent coverage of its measurements. While local and regional surveys can be performed using ground stations and aircraft, global surveys require the synoptic view and repetition rate that satellites can provide. The primary question addressed by the Study was what technological developments are necessary to permit the utilization of space in the Atmospheric Observation System in the early 1990's.

Many space-based remote sensing techniques are being developed, some of which have been demonstrated in airborne platforms. Space application of these techniques has different operational requirements and must adapt to considerations of higher interference and less detectable signal. The orbiting satellite must accommodate larger, more sensitive instruments. The spacecraft data system must be capable of handling large amounts of data for extended periods and on a routine basis. The close coupling between sensing techniques and operational aspects such as orbit and spatial/temporal coverage suggested that the Study must consider the whole system and mission in order to arrive at a realistic set of technology needs. This, in turn, would provide the sensor designers and spacecraft planners a useful guide concerning the developmental needs and problems to be solved.

Thus, the Study conceptualizes a future system consisting of sensors, observational missions, spacecraft, and a data handling system. The primary input for the formulation of that concept is a model of AOS measurement needs; the output is a set of technology requirements that must be met to make the system possible. In order to ensure that the validity of the technology-related output is not oversensitive to specific features of the model, the methodology made the following provisions:

1. A significant variety of measurement approaches were incorporated in AOS, avoiding premature lock-in and/or specific rejection of specific ones and recognizing the ultimate need for some redundancy and means of data corroboration using alternate methods.

2. An evolutionary set of missions was postulated, starting in the late 1980's and preceding through the mid-90's, thus providing a more flexible progression, the results of each step being the basis for the succeeding one.

3. A one-to-one matching of performance characteristics of the sensing technique with the needed measurement was set only as a goal but not established as an absolute criterion for the utility of the technique.

The system/mission model and technology analyses in the Study were conducted within the context of five interrelated tasks:

Task 1 - Tropospheric Research Needs
Task 2 - Mission Definition
Task 3 - System Design Concepts
Task 4 - Technology Assessment
Task 5 - Assessment of Classified Technology

SECTION 2

SUMMARY OF RESULTS

SECTION 2
SUMMARY OF RESULTS

This section of the report is a perspective overview of the technology assessment relative to tropospheric air quality measurements from space. Salient areas of impact upon that assesment by the various tasks in the Study are identified.

Space-based observation of the troposphere has great potential in the performance of global and quasi-global measurements of trace gaseous species, aerosols, and the supporting thermal/dynamics measurements. The full realization of this potential will require developments in critical technology areas as enumerated below.

1. Improvements are needed in baseline information on trace species spectral characteristics, aerosol properties, and chemical kinetics of gaseous species and aerosols. The bulk of this data can be obtained in the laboratory and needs to be correlated between on-going research and the specific need of the tropospheric program.

2. New remote sensing techniques need to be developed in important measurement areas in tropospheric research where no satisfactory ones have been found. This includes new applications of remote sensing such as the measurement of the spatial distribution of aerosol chemical composition, as well as new methods of measuring or inferring the concentration distribution of very tenuous species.

3. Coupling of passive radiometer sensors and multi-detector arrays is required to produce push-broom devices capable of increasing integration time during orbital observations requiring wide ground swaths.

4. Geosynchronous orbital missions should be included in future tropospheric air quality measurements to provide large area coverage of gaseous and particulate transfer and transformation phenomena requiring frequent observation. In connection with such missions, the technology in Item 3 should be expanded to encompass two-dimensional detector arrays capable of simultaneous multispectral measurement of hundreds of resolution elements in the troposphere.

5. LIDAR sensor developments should consider the technology implications of a long-duration satellite mission. For instance, long-life CO_2 lasers are needed that are compatible with continuous multi-year operation at pulse frequencies up to 15 Hz and energies in the order of 10 Joules.

6. The Command and Data Handling System for the Atmospheric Observation System will benefit from the developments of the NEEDS Program. On-board processing will require the development of compact on-board random access memories with capacities in the order of 10^9 bits.

7. The pace of information extraction algorithm development for key tropospheric measurements should be accelerated to support sensor designs and end-to-end system conceptualization.

8. The on-going NASA Program on spacecraft systems technology needs to consider the requirements of the large spacecraft for a low Earth orbit mission which includes LIDAR sensors for atmospheric air quality measurements. The overall interaction of a long duration mission, large sensor complement, high power level, heat dissipation, etc. require new and effective design approaches.

9. Technological advances within the Department of Defense should be factored into the overall technology development program, within the necessary security requirements.

In retrospect, several alternate approaches could have been used to define technology needs for AOS; however, the overall systems approach that was used; encompassing a modeling process from needs projection to satellite concept, is considered a viable one. Recognizing the information gaps in tropospheric science and the limited resources of the study, the process must be an iterative one, through which the critical technology areas identified will be analyzed in more depth as additional analytical, experimental, and programmatic resolutions will unfold. (The Tropospheric Air Quality Program assumes an aircraft measuring program that will produce the information necessary to set the space program requirements.) Thus, the results of this first iteration are not intended to be "set in concrete". Rather, they point the way for future research areas, on the basis of a first-pass through all system aspects that bear on technology. The following paragraphs show examples of how the analyses in the Study uncovered several technology need patterns or interacted to identify specific technology needs.

The needs projection in Task 1 identified the need for <u>simultaneous</u> measurements involving several interacting species and atmospheric conditions to address the knowledge objectives as derived from the Working Group results. This simultaneity, coupled with the global coverage requirements at frequent intervals, had a large impact upon the nature of the multi-measurement, multi-sensor missions and their orbit selections. Also, in the process of establishing initial measurement needs relative to range, accuracy, resolution, etc., we encountered several areas where the baseline of scientific data available to enable these specifications needed enhancement.

During the analysis of sensors it became evident that the vertical resolution and accuracy needs for many of the tropospheric species are feasible using LIDAR but would be difficult to attain using passive techniques. However, de-emphasizing the passive sensor technology was considered programmatically risky, in the light of the timeframe for scientifically operational satellite systems carrying LIDAR sensors: A substantial amount of aircraft-based and Shuttle sortie testing will precede those promising LIDAR missions which could be launched in the post 1993 timeframe. Further investigation suggested that valuable tropospheric research will be possible using passive sensors, even if these exhibit some limitations in sensitivity and vertical resolution. Furthermore, the passive sensor technology is comparatively well advanced and sensors' accommodation in satellite would be possible with a low degree of complexity and with modest demands from the orbital system. In fact, initial experiments employing passive sensors and accommodated in Shuttle sorties and conventional Sun-synchronous orbiting satellites would also provide the necessary developmental basis for an advanced AOS System consisting of a combination of: (1) active sensors in a once or twice a week repeater LEO orbit; (2) passive sensors on a geosynchronous satellite, and (3) passive and active sensors on aircraft and over selected ground sites.

The Study was basically an assessment of technology needs based on projections into the future of scientific objectives that were preliminarily defined by NASA and the Working Group. (The Tropospheric Air Quality Program assumes an aircraft measuring program that will produce the information necessary to set the space program requirements.) In order to identify realistic technology needs, it was necessary to construct a model of missions and systems to permit the identification of the technological problems of using Space to help in meeting the scientific objectives. Furthermore, the missions concepts were sequenced as a natural progression of steps made possible by the projected emerging technology during the next 13 years. Although the conceptual missions and systems are considered to be dedicated to the tropospheric research programs, no implication of the cost-effectiveness or practicality of the dedicated approach is implied. Two likely variations in the mission scenarios will make the ultimate implementation more practical:

a. Sensor "packages" for tropospheric research could share accommodations on multi-mission Shuttle sorties and other spacecraft; either as a primary or secondary payload or in a "piggy back" mode.

b. Since many of the generic sensors in the Study are useful in other measurements in addition to these in the troposphere, the sensors could be part of a future multi-disciplinary satellite or "space platform" for atmospheric observation, (e.g., AOS or ARS), both for research and application missions.

Although it is difficult at this juncture to decouple technology from mission and system implementation mode, we have endeavored in this Study to make the resulting technology needs insensitive to variations in the ultimate implementation of an AOS.

SECTION 3

TROPOSPHERIC RESEARCH NEEDS AND POTENTIAL MEASUREMENTS AND TECHNIQUES

SECTION 3

TROPOSPHERIC RESEARCH NEEDS AND POTENTIAL MEASUREMENT & TECHNIQUES

The results of this task define the baseline for the remainder of the Study, and include the projected scientific objectives, projected measurement needs, and sensors necessary to fulfill those objectives.

3.1 KNOWLEDGE OBJECTIVES

The Working Group on Tropospheric Air Quality summarized the problems that needed to be solved in a set of 39 questions related to Tropospheric pollution. (A preliminary version of this document was made available for this study by NASA). These questions fit three basic research problems:

I. What are the principal processes governing the global carbon/nitrogen/ozone system?

II. What are the principal processes governing the global sulfur/ammonia/trace metal/carbon/aerosol system?

III. What are the relative roles of transport, transformation, and removal processes in governing the behavior of regional and urban scale polluted air masses?

Based on these questions, NASA has compiled a set of research needs (Reference: "The NASA Program on Global Tropospheric Air Quality", June 1980) which are adopted as the basis for the Study; these are presented in Table 3.1-1. The NASA AOS missions and systems postulated herein are focused on meeting these knowledge objectives, thus providing the necessary information to construct an accurate model of tropospheric physical chemical processes, including the role of atmospheric dynamics. The first step in this progression is the translation of knowledge requirements into measurements, as shown in the next section.

3.2 PRELIMINARY MEASUREMENT NEEDS

Derivation of measurement needs for tropospheric research from space platforms required a consideration of the complementary role of space, ground and airborne sensing. The basic assumption used was that the ground-based and aircraft program will achieve a portion of the knowledge objectives, particularly that dealing with local or regional air quality. In addition, it will lay the foundation for a more comprehensive global survey, particularly with respect to the development of sensing techniques and the focusing of

TABLE 3.1-1. KNOWLEDGE OBJECTIVES

1. DETERMINE THE PRINCIPAL PROCESSES GOVERNING THE GLOBAL CARBON, NITROGEN, AND TROPOSPHERIC OZONE SYSTEMS.

   1a. MEASURE AND MODEL THE EXCHANGE OF OZONE BETWEEN STRATOSPHERE AND TROPOSPHERE.

   1b. DETERMINE CLIMATOLOGY RELATED TO SURFACE LOSS OF OZONE.

   1c. QUANTIFY THE OZONE PHOTOCHEMICAL PRODUCTION/LOSS PROCESSES IN THE ATMOSPHERE.

   1d. ASSESS IMPACT OF ANTHROPOGENIC ACTIVITY ON THE NATURAL TROPOSPHERIC OZONE CYCLE.

   1e. QUANTIFY THE GLOBAL NATURAL AND ANTHROPOGENIC SOURCE STRENGTHS OF CH_4, CO, AND NMHC's.

   1f. UNDERSTAND THE METHANE AND NMHC OXIDATION CHAINS.

   1g. UNDERSTAND THE CH_4 AND NMHC SOURCE STRENGTHS IN TERMS OF VARIABLES THAT AFFECT PRODUCTION.

   1h. DETERMINE TEMPORAL AND SPATIAL VARIATIONS OF CHEMICALLY REACTIVE NITROGEN SPECIES.

   1i. ESTABLISH THE ROLE OF THE BIOSPHERE AS A SOURCE OF REACTIVE NITROGEN SPECIES, AND HOW ANTHROPOGENIC ACTIVITIES MAY ALTER THE NATURAL BIOSPHERE/ATMOSPHERE BUDGET OF NITROGEN SPECIES.

   1j. DETERMINE THE ROLE OF THE HETEROGENEOUS CHEMISTRY OF NITROGEN SPECIES, BOTH AS A SINK, AND AS PRECURSORS IN THE PROCESS OF AEROSOL PRODUCTION.

2. DETERMINE THE PRINCIPAL PROCESSES GOVERNING GLOBAL SULFUR, AMMONIA, TRACE METAL, CARBON, AND AEROSOL SYSTEMS.

   2a. UNDERSTAND THE REACTION PATHS AND RATES OF SULFUR SPECIES, WITH EMPHASIS ON THE CHEMICAL CONVERSION OF SO_2 TO H_2SO_4 AND THE FATE OF H_2SO_4.

   2b. UNDERSTAND THE STRENGTHS OF NATURAL AND ANTHROPOGENIC SOURCES OF SULFUR SPECIES.

   2c. UNDERSTAND THE LARGE-SCALE TRANSPORT AND DIFFUSION OF SULFUROUS GASES IN THE BOUNDARY LAYER AND THE FREE TROPOSPHERE.

   2d. OBTAIN DATA ON SPATIAL AND TEMPORAL DISTRIBUTION, SIZE DISTRIBUTION, CONCENTRATION, INDEX OF REFRACTION, AND CHEMICAL COMPOSITION OF NATURALLY AND ANTHROPOGENICALLY PRODUCED AEROSOLS.

   2e. DETERMINE THE CHEMICAL AND PHYSICAL PROCESSES LEADING TO THE FORMATION, GROWTH AND REMOVAL OF THE VARIOUS TROPOSPHERIC AEROSOLS.

   2f. DETERMINE THE ROLE OF AEROSOLS AS ACTIVE CONSTITUENTS AND/OR AS CATALYSTS IN THE ATMOSPHERE CHEMICAL CYCLES.

   2g. STUDY THE LONG-RANGE TRANSPORT AND DISPERSION OF AEROSOLS (BOUNDARY LAYER AND FREE TROPOSPHERE).

   2h. MEASURE FLUX OF NATURAL AND SELECTED ANTHROPOGENIC SOURCES OF Hg, As, Se, and Pb.

3. GAIN A THOROUGH UNDERSTANDING OF THE PROCESSES WHICH DRIVE THE WEATHER-RELATED DYNAMICS OF THE LOWER ATMOSPHERE.

   3a. QUANTIFY THE LARGE-SCALE STRATOSPHERE-TROPOSPHERE, AND BOUNDARY LAYER FREE TROPOSPHERE EXCHANGE PROCESS.

   3b. VALIDATE THE MODELS WHICH DESCRIBE THE DYNAMIC PROCESSES.

   3c. PROVIDE SYNOPTIC DATA ON ATMOSPHERIC DYNAMICS TO SUPPORT THE DEVELOPMENT OF A QUANTITATIVE UNDERSTANDING OF IN-SITU CLOUD CHEMISTRY ON ATMOSPHERIC CONSTITUENTS.

subsequent research along lines that will produce an effective yield of scientific knowledge. The space program for tropospheric research, on the other hand, will emphasize the global aspects of the research and those large scale regional aspects where aircraft based research may prove impractical. Within this perspective, the measurement needs projected in this study are very preliminary, and will only be translated into the final measurement requirements when the results of the aircraft program have been achieved.

The analyses performed in order to permit quantification of the range, accuracy, and spatial/temporal coverage included a consideration of the effects of trospheric composition, chemical reactions, molecular lifetimes, and particulates.

3.2.1 TROPOSPHERIC COMPOSITION

Appropriate knowledge of the composition of the troposphere and stratosphere is essential to the determination of the feasibility of the measurements. This includes the concentraton of each species as a function of altitude from ground level to a height at which the concentration is much less than that in the troposphere. The range of the burdens can thus be defined for each of the trace gases where burden is defined as the number of molecules in a Column 1 cm^2 in cross section. Such concentration approximations are best obtained from calculations using a suitable chemistry model, that is, one which provides a self-consistent set of data which represents an average atmospheric condition (or several conditions) and is in reasonable agreement with accepted measurements.

The concentrations used in this Study were taken mainly from the tropospheric model of Levine*, and the stratospheric and mesopheric model of Turco**. The tropospheric concentration profiles for many of the species are presented graphically in Figures 3.2.1-1 and 3.2.1-2. Similar data for the higher altitudes are presented in Figure 3.2.1-3 for those species which have, in that region, significant burdens in comparison with those in the troposphere. These data were used to calculate the burdens of each of the gaseous species

* Levine, J. - Private Communication, July 1980.
** Turco, R. P., Geophysics Surveys, Volume 2, Page 153 (1975).

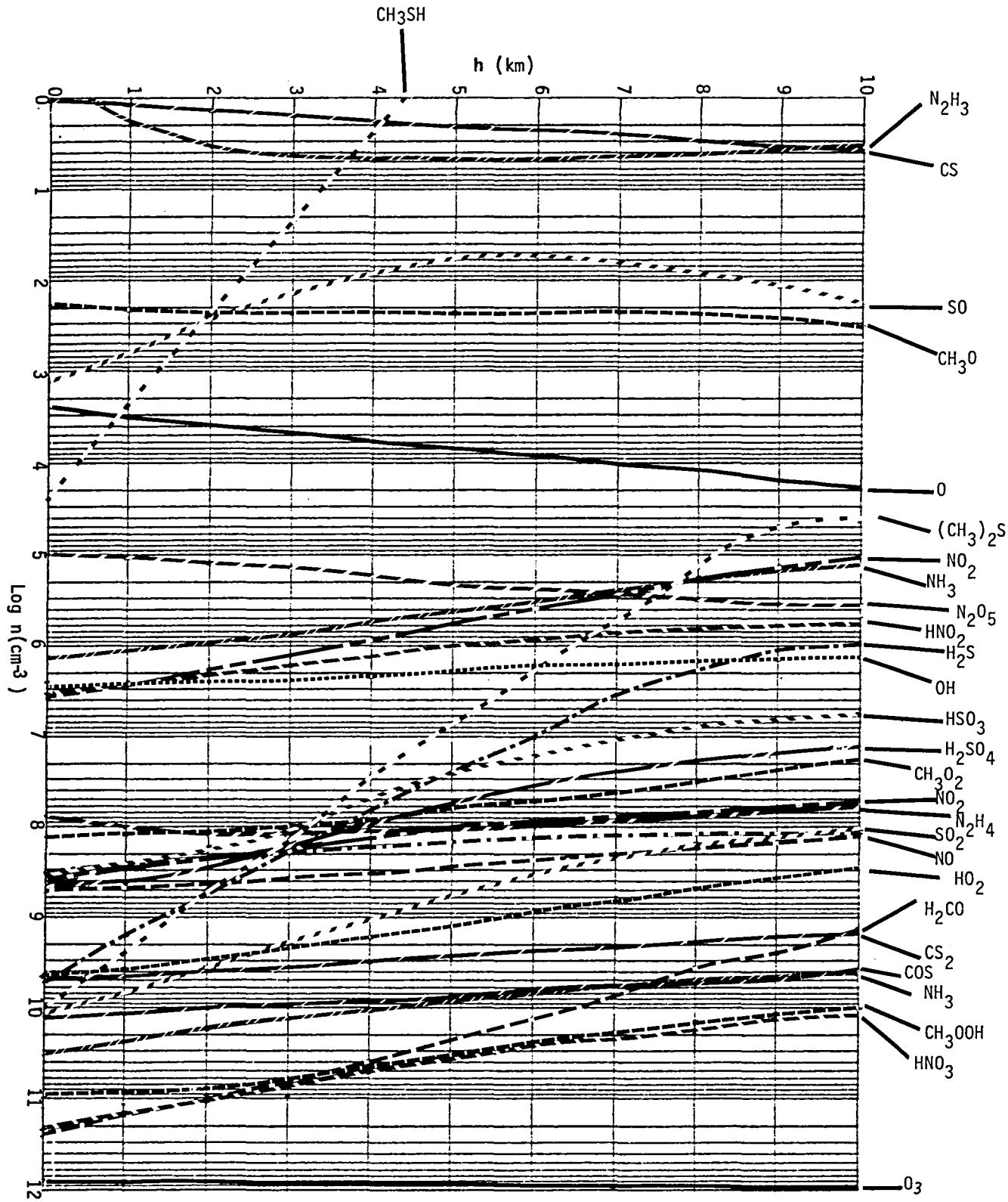

Figure 3.2.1-1. Concentration Profiles for Species Set "A"

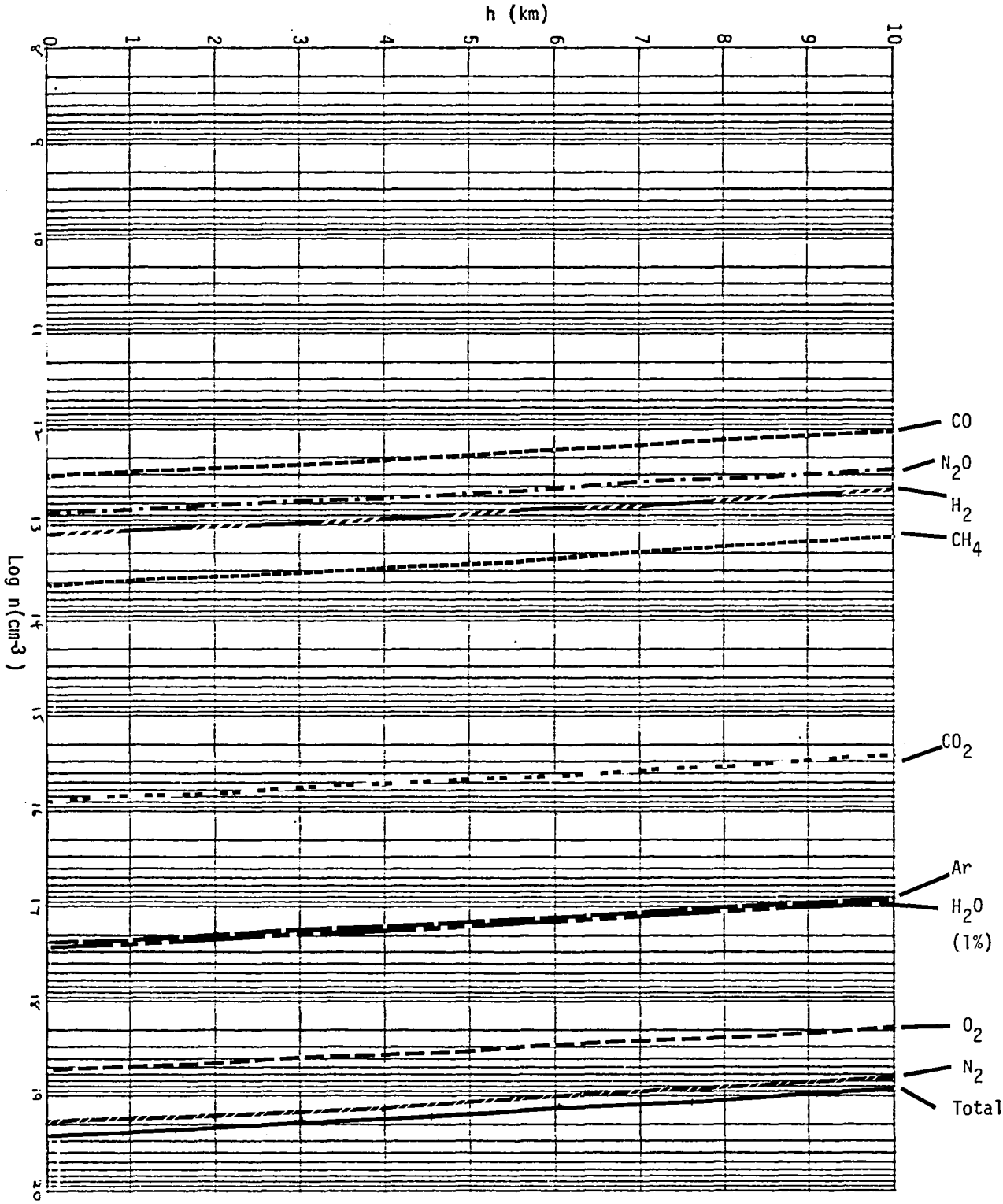

Figure 3.2.1-2. Concentration Profiles for Species Set "B"

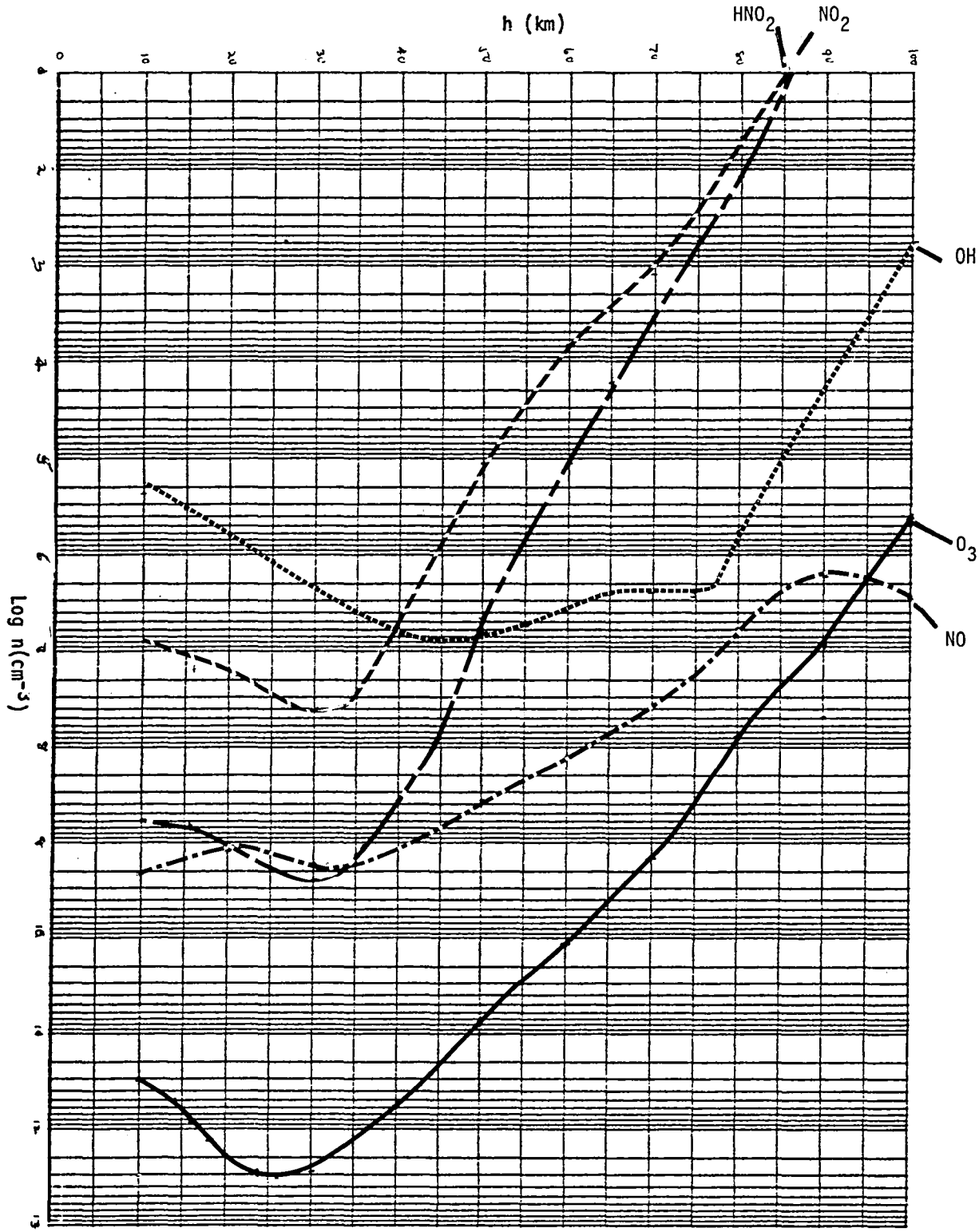

Figure 3.2.1-3. Concentration Profiles Up To 100 km

(by graphical integration of linear plots), as well as the rates of the reactions in which each is involved. The uncertainties in these concentrations are fairly large, and show large variation in concentration with longitude, latitude, season, time of day, and other factors.
From these concentration data, total burdens were calculated for each gas. These are given in Table 3.2.1-1. They represent the amount of the gas in a cm^2 column from ground level up through the troposphere and from ground level up through the entire atmosphere. They are given in ppm-m*.

3.2.2 TROPOSPHERIC CHEMISTRY

Each of the gaseous species are formed and removed by many chemical reactions. A large number of these reactions have been factored into the estimates of the rates of formation and removal. The rate constants for this analysis were taken from various sources, or if not available, were estimated by comparisons with known reactions. As an example, Table 3.2.2-1 lists the dominant reactions in the formation and removal of OH. While other reactions were included in the calculations, they were of less importance. From data such as these the chemical lifetime of each species can be calculated; a primary factor in our determination of the spatial/temporal coverage-related measurement needs for space observations. Again using OH as an example, the total rate of removal is 2.9×10^6 molecules cm^3 $sec.^{-1}$.

The OH concentration at ground level is taken as 2.4×10^6 molecules cm^{-3}. The lifetime** is thus:

$$\frac{2.4 \times 10^6}{2.9 \times 10^6} = 0.83 \text{ sec}$$

The liftimes of various gaseous species determined as for OH above are given in Table 3.2.2-2.

The chemical processes for the O-H, O, C, N, and S cycles were analyzed. Some of the chemistry is illustrated in a simplified form in Figures 3.2.2-1 and 3.2.2-2. Figure 3.2.2-1 is for the oxygen-hydrogen system where the major reacting species are H_2O, OH, HO_2, and H_2O_2. This illustrates the

---

* One part per million meter = 2.7×10^3 molecules cm^{-2}
** The time required to reduce the concentration by a factor of ____ if only removal processes operate.

Table 3.2.1-1. Gaseous Burden Ranges

	MIN.	NOM.	MAX.
O_3	1.2 (2)	2.3 (2)	3.0 (3)
H_2SO_4	4.0 (-3)	5.6 (-2)	4.0 (-1)
H_2O	2.0 (6)	4.1 (7)	1.6 (8)
HNO_3	2.0 (0)	2.3 (1)	2.0 (2)
NH_3	4.0 (-1)	4.5 (0)	4.0 (1)
NO	1.0 (0)	2.0 (0)	3.0 (0)
CO	2.8 (2)	8.0 (2)	2.8 (3)
SO_2	8.0 (-2)	8.1 (-1)	8.0 (0)
OH	2 (-1)	1 (-2)	5 (-2)
H_2S	1 (-2)	1.8 (-1)	2 (0)
HO_2	1 (-2)	1.2 (-1)	1 (0)
CH_4	5 (3)	1.1 (4)	3 (4)
NO_2	8.0 (-1)	1.7 (0)	2.4 (0)
H_2CO	1 (-2)	1.4 (-1)	1 (1)
CS_2	1 (-2)	1.1 (0)	1 (1)
COS	1 (-1)	3.1 (0)	3 (1)

Table 3.2.2-1. OH Kinetics at 0 km Altitude

Formation			
$HO_2 + NO$	$\rightarrow$	$OH + NO_2$	1.3×10^6 molecules cm^{-3} sec^{-1}
$O(D') + H_2O$	$\rightarrow$	$OH + OH$	5.3×10^5
$O_3 + HO_2$	$\rightarrow$	$OH + O_2 + O_2$	6.0×10^5
$HNO_3 + h\nu$	$\rightarrow$	$OH + NO_2$	2.3×10^4
$O + CH_4$	$\rightarrow$	$CH_3 + OH$	1.6×10^4
$H_2O_2 + h\nu$	$\rightarrow$	$OH + OH$	$\sim 1.8 \times 10^6$
Removal			
$OH + CO$	$\rightarrow$	$H + CO_2$	8.5×10^5
$OH + CH_4$	$\rightarrow$	$H_2O + CH_3$	7.6×10^5
$OH + H_4CO_2$	$\rightarrow$	$H_2O + H_3CO_2$	2.0×10^5
$OH + H_2O_2$	$\rightarrow$	$H_2O + H_2O$	5.0×10^5
$OH + H_2$	$\rightarrow$	$H_2O + H$	1.9×10^5
$OH + H_2CO$	$\rightarrow$	$H_2O + HCO$	1.4×10^5
$OH + O_3$	$\rightarrow$	$HO_2 + O_2$	9.8×10^4
$OH + NO_2 + M$	$\rightarrow$	$HNO_3 + M$	5.9×10^4
$OH + HO_2$	$\rightarrow$	$H_2O + O_2$	3.7×10^4
$OH + HNO_3$	$\rightarrow$	$H_2O + NO_3$	4.4×10^4
$OH + NH_3$	$\rightarrow$	$H_2O + NH_2$	4.0×10^4
$OH + NO + M$	$\rightarrow$	$HNO_2 + M$	1.1×10^4

Table 3.2.2-2. Lifetime of Gaseous Molecules

O	0.1	msec
O_3	30	min.‡
OH	0.83	sec.
HO_2	250	sec.
H_2O_2	3	day*
NO	1	min. } (2 hr)x
NO_2	1.5	min } (2 hr)x
NO_3	10	min
HNO_2	3	day
HNO_3	2	mo.*
CO	5	week
CH_4	1.7	year
H_2CO	2	hour
HS	70	μsec
H_2S	1.5	day
SO	1	msec
SO_2	2	week
SO_3	2	μsec
HSO_3	12	hour
H_2SO_4	30	sec.

x Lifetime of NO and NO_2 to form something other than NO_2 or NO is 2 hours.

* May be significantly shorter due to aerosol processes.

‡ Dependent on solar flux.

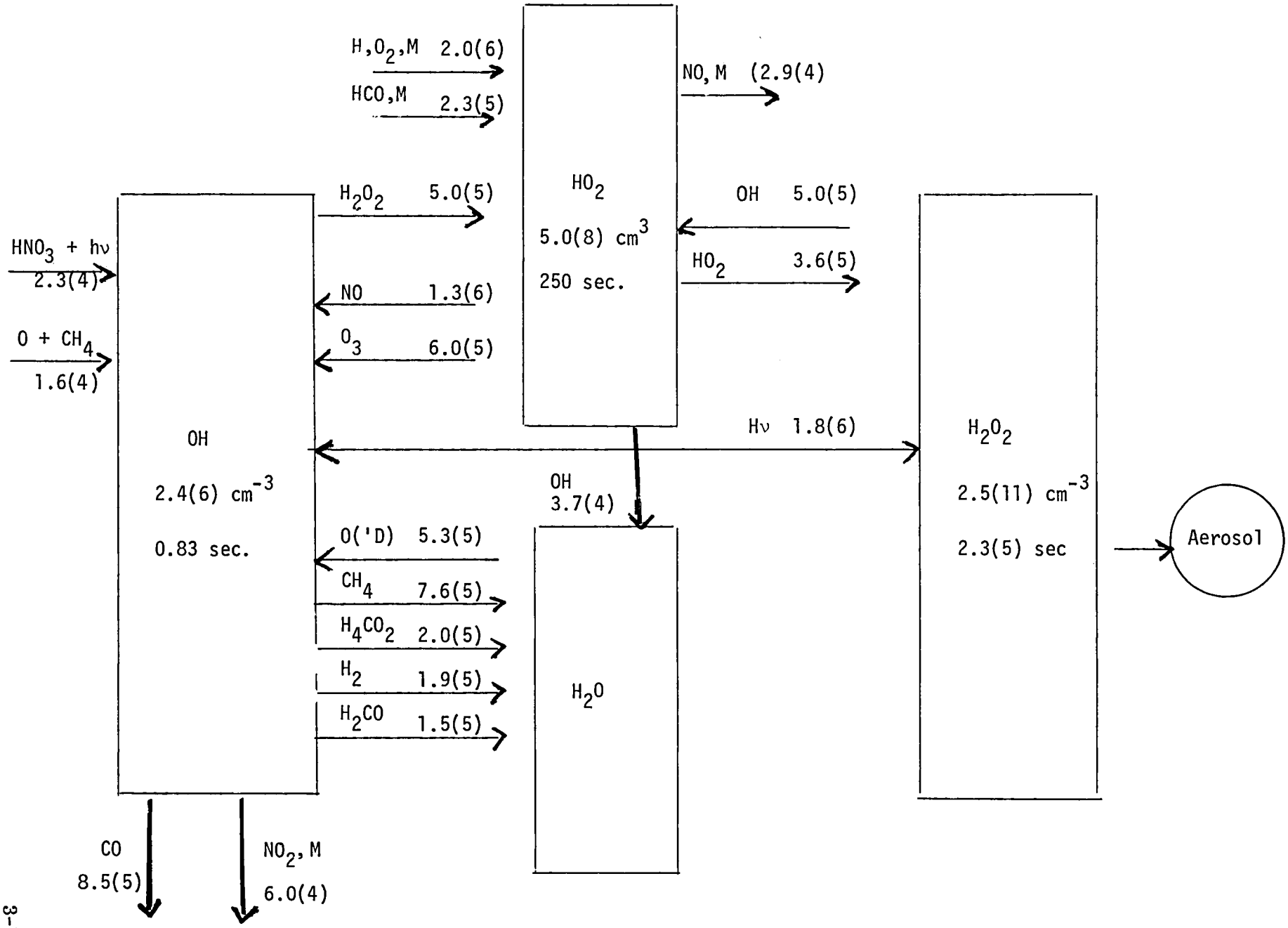

Figure 3.2.2-1. H - O System Kinetics

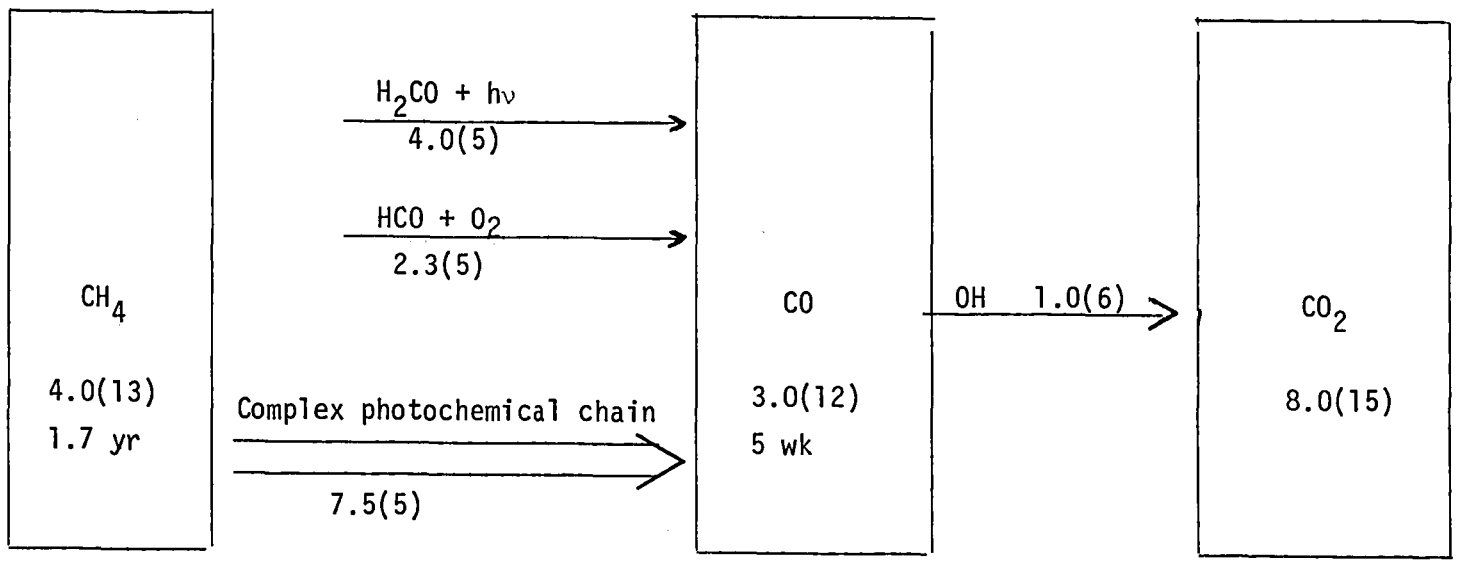

Figure 3.2.2-2. C Cycle

data in Table 3.2.2-1. The carbon cycle is represented similarly in Figure 3.2.2-2.

3.2.3 ATMOSPHERIC AEROSOLS

Several of the measurement needs relate to aerosols since they play a large role in the chemical cycles of the various atmospheric components. They are especially involved in the removal of many of the trace components of the atmosphere. In the discussion of the cycles of nitrogen, sulfur, and hydrogen it is seen that components such as HNO_3, H_2SO_4, and H_2O_2 are removed through aerosols. The problems of aerosols have received less attention than those of the gaseous species; consequently, there are many questions which remain to be answered. This is reflected in the list of Knowedge Objectives.

The characterization of aerosols includes the determination of the distribution (number density) as a function of size, of the mass distribution, of their composition and of the physical and chemical processes in which the aerosols are involved. The following ranges will serve to illustrate these characteristics:

	Min.	Nom.	Max.
Aerosol Number Density (cm^{-3})	10^{-1}	10^{3}	10^{5}
Particle Diameter (cm)	10^{-6}	10^{-4}	10^{-2}
Mass Density ($gm\text{-}cm^{-3}$)	1.2	1.3	1.6

3.2.4 OTHER QUANTITIES

In order to understand the chemistry and dynamics of the atmosphere certain other quantities are needed. The solar flux, which plays an important photochemical role, must be known especially in those bands where ozone is dissociated. Typical solar flux ranges are as follows:

Spectral Range	Flux Units	Min.	Nom.	Max.
400 - 800 nm	(Watts cm^{-2} A^{-1})	0	13	22
310 - 360 nm	(Watts cm^{-2} A^{-1})	0	3	14

The temperature profile is also needed since temperature plays an important role in determining atmospheric radiative transfer and in determining the rate of some chemical reactions. Weather fronts, wind, and the occurrence of

storms are other physical features which are needed. One of the areas of high scientific interest is the phenomena of acid rain where meteorological factors are believed to play a major role in the intensity and spatial distribution of this type of pollution.

3.2.5 MEASUREMENT OF INDIVIDUAL SPECIES

The Knowledge Objectives given in Table 3.1-1 can be addressed by measuring the relevant individual species over specified regions, with certain temporal and spatial (vertical and horizontal) resolution, with appropriate frequency of measurement, accuracy and precision. From estimates of the concentrations, resultant burdens, and lifetimes of the individual species, a set of preliminary measurement needs correlated with the Knowledge Objectives were generated. These are set down in Appendix A, Tables 3.2.5-1a through 3.2.5-3c corresponding to the numbering of the Knowledge Objectives in Table 3.1-1. Delineation of these measurement needs was not influenced by current technological capability; thus, some items may appear unrealistic from a remote sensing point of view. We believe that this unconstrained approach yields the best results in the technology analysis of the Study.

3.2.6 GENERAL MEASUREMENT NEEDS

Figure 3.2.6-1 shows a general summary of the ranges associated with the measurement parameters, categorized into species concentration, thermal parameters, aerosols and atmospheric dynamics

Some of these measurement needs may not be satisfied through space observations, due to the constraints imposed by the space measurement perspective. For instance, OH and H_2S may not be able to be measured directly due to short lifetimes and tenuous concentrations.

The first category is normally associated with the Air Quality discipline, while the last three categories have high commonality with other disciplines such as meteorology. Not only is the spectrum of categories covered by the measurements fairly broad, but the quantitative ranges are wide, as exemplified by gas concentrations from 10^5 to 10^{14} CC^{-1}, and accuracies from 5 to 50%. One of the primary mission drivers, frequency of measurement, ranges from several times per day to approximately once per week. Horizontal resolutions, nominally 50 to 1000 km are generally coarse compared with earth

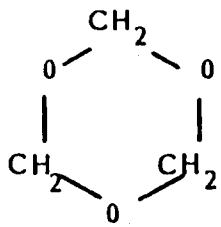

TRACE SPECIES (CONCENTRATION PROFILES)	CO, CH_4 HNO_3, NH_3, NO, NO_2 O_3, OH, H_2O, HO_2 H_2SO_4, SO_2, H_2S	CONCENTRATIONS: 10^5 - 10^{14} CC^{-1} ACCURACIES: 5-50% FREQUENCIES: 1/HR. - 1/WK. RESOLUTION: HORIZONTAL 50-1000km VERTICAL ½ - 7km

THERMAL PARAMETERS	AIR TEMPERATURE SOUNDINGS SURFACE TEMPERATURE SOLAR FLUX PROFILE	TEMP RANGES: 180-320°K MAX. TEMP. ACCURACY: 0.2 K AT SURF. FREQUENCIES: 2/DAY, 1/WK.

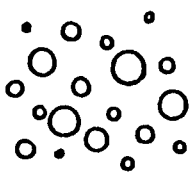

AEROSOLS	CONCENTRATION DISTRIBUTION SIZE DISTRIBUTION COMPOSITION DISTRIBUTION MASS DISTRIBUTION	ACCURACIES: 5-50% FREQUENCIES: 2/DAY-1/WK. RESOLUTION: HORIZONTAL 100-200km VERTICAL 1-2km

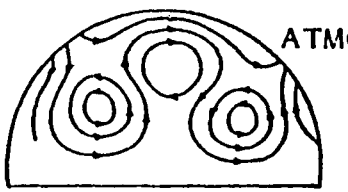

ATMOSPHERIC DYNAMICS	CLOUD MOVEMENT CLOUD SIZE, COVER WIND SPEED WIND DIRECTION	ACCURACIES: 5-50% FREQUENCIES: 2/DAY-1/WK. RESOLUTION: HORIZONTAL 100km VERTICAL 0.5km

Figure 3.2.6-1. Summary of Measurement Needs

resources derivation needs. The low end of the vertical resolution are considered stringent and places heavy demands on the instrumentation.

3.3 POTENTIAL MEASUREMENT TECHNIQUES

Classes of Measurements

The needs for tropospheric research discussed in Section 3.2 encompass a wide variety of environmental, meteorological and transport-related measurements. These include concentration profiles of gaseous species, temperature profiles, surface temperatures, aerosol physical properties, cloud parameters, weather fronts, and wind vectors. Many of the measurements involve the sensing of absorption lines of different strengths and wavelengths under a variety of spectral interferences from other gases. Others, related to aerosol concentration and wind speed, require measurements of particulate scatter and velocity. This wide spectrum of observables and measurement classes also suggests a wide spectrum of measurement techniques using natural and artificial illumination, wavelengths from the UV to microwave, and effective bandwidths from a fraction of an angstrom to tenths of nanometers.

The general classes of sensing considered in the study incudes radiometry, spectrometry, polarimetry, and active optical scatterometry. The sensor classes cover different stages of developmental maturity; for instance, IR interferometric spectrometers are further along than sub-millimeter wave heterodyne spectrometers. The study does not attempt to optimize the selection of sensors for a set of projected measurements, but endeavors to identify the generic sensors that are applicable to the projected tropospheric measurement needs.

Factors in Sensor Selection

In considering the applicability of the various generic passive and active sensors to the measurement of the required atmospheric species a number of factors were considered:

1. Does the operating principle of the sensor permit the measurement to be made in theory?

2. Does the species of interest have spectral features which the sensor can measure, and are they in a spectral region within which the sensor operates?

3. Are there any other factors which may limit the applicability of a particular generic sensor? (i.e., Does the measurement require extremely high resolution?; Is the species too reactive to be contained in a gas cell?)

These factors, while qualitative, served to provide a first order sensor selection, based on whether the measurement is possible in principle. More detailed performance considerations will require future detailed sensitivity and error analyses for each species and sensor, considering many potential spectral regions, interspecies interferences as well as information extraction algorithms.

The following generic sensors were selected for the AOS Missions:

- Interferometric Spectrometer Survey Sensor.
- Partial Scan Interferometer.
- Gas Filter Radiometer.
- Laser Heterodyne Spectrometer.
- Sub-Millimeter Heterodyne Radiometer.
- Photopolarimeter.
- Multispectral Spectroradiometer.
- Temperature Sounder.
- LIDAR.

The list of generic sensors shown above includes instruments which, by and large, correspond to existing hardware or well formulated concepts. This is to be expected in an active and innovative field such as atmospheric science. However, existing sensors or sensor concepts, in their presently conceived configuration may not be able to satisfy the measurement needs as projected by the AOS Study. Example are the measurement of very faint species in the troposphere and the identification of aerosol material composition and its distribution. Needed also are new arrangements of sensing techniques necessary to provide the wide and frequency spatial-temporal coverage attendant to global surveys. For instance, in subsequent sections we will introduce the concept of coupling linear and two-dimensional arrays with radiometers and spectrometers. Marriage of these two on-going developments has the potential of enabling wide-swath coverage measuring constituent

concentrations at low orbits using a push-broom mode and large area coverage from high altitude using a "stare" mode. The advantages here would be the elimination of rotating scan-mirrors and the increase in integration time.

Similar advancements are suggested concerning the conversion of instruments such as "ATMOS", which are currently designed to operate in the solar occultation modes, to the nadir-looking mode as required in tropospheric monitoring. In turn, the more stringent sensitivity requirements associated with the nadir-looking mode will necessitate the use of cryogenic cooling of detectors and sensor fore-optics.

Limb or solar occultation sensors have been omitted from this list, due to the high probability of interfering clouds in the long path of the limb within the troposphere; also the inability to meet the 100-200 km horizontal resolution with limb measurements. All but the last item, the LIDAR sensor, are passive even though the Laser Heterodyne Spectrometer utilizes active elements and reference local oscillators within the instruments. The term "generic" implies a category of sensors, rather than a specific sensor concept, design or existing instrument. Thus, there are many variations within any one generic category; for instance, gas filter radiometers in the thermal IR, in the visible and near IR, pressure modulated radiometers (PMR), and gas filter correlation radiometers.

The following sections relate to the two primary categories of atmospheric sensors, passive and active.

3.3.1 PASSIVE SENSORS

Sensor Applicability Considerations

The following discussion illustrates some of the factors that led to the consideration of the passive sensors. The example deals with four sensors: the interferometric spectrometer, partial scan interferometer, gas filter radiometer and laser heterodyne spectrometers, in connection with measurements of the various leading species.

O_3

In measuring tropospheric ozone it is necessary to employ a technique which is capable of discriminating between the large signal from the stratospheric

ozone layer and the weaker signal from the tropospheric ozone. The spectral feature which allows one to effect this discrimination is the line shape of each individual spectral line. The tropospheric ozone affects the wings of the line profile, whereas the stratospheric ozone primarily affects the line shape at the line center. The generic sensors which have the necessary high spectral resolution capability are the laser heterodyne spectrometer and the interferometer spectrometer. The gas filter radiometer has vertical profiling potential but the containment of a reactive gas such as ozone in a gas cell for long periods is a problem which may require advancements in the development of filter materials and for in-flight gas purging and resupply.

$\underline{HNO_3}$

For measuring nitric acid in the atmosphere, the two interferometers and the laser heterodyne radiometer could potentially provide information regarding HNO_3 in the atmosphere. The containment of HNO_3 in a gas cell, as in the case of O_3, would present problems for the gas filter instrument.

Limited knowledge of the spectral signature of HNO_3 and potential interferences in various spectral regions complicates the application of any of the aforementioned potential sensors. In addition, there is evidence that the dynamic range of HNO_3 concentration is very large, further complicating the measurement techniques.

$\underline{NH_3}$, $\underline{CO}$, $\underline{CH_4}$

Any of the four generic sensors has the potential for measuring total burden, or species concentration profile (with limited vertical resolution) since there are no spectral or physical limitations and the line strengths are relatively strong.

$\underline{SO_2}$

While SO_2 may be measured (in principle) by all the passive sensors, the low abundance in the atmosphere and weak spectral signature probably preclude accurate measurement by any of the sensors considered but the gas filter radiometer or partial scan interferometer, since these make integrated spectral band measurements.

Consideration Relative to Spectral Regions of Measurement

In selecting spectral regions for operation of the passive sensor, sometimes it is desirable to make the measurement in the non-thermal spectral region (i.e., wavelengths less than 3.5 microns). Operation at these shorter wavelengths permits measurement of the gas species in the total column right to the Earth's surface. However, use of this region is often restricted, since the species of interest may not have a spectral band in this region, or the band may be too weak if it exists, or the spectrally interfering species may be too strong. If use of the non-thermal region is not feasible, then the measurement is restricted to the thermal infrared region (i.e., wavelengths longer than 3.5 microns). Although this region has an abundance of lines in the trace species, the problem of finding a suitable spectral wavelength with sufficient band or line strength, and also with minimal spectral interference by other species, still remains. However, the passive thermal infrared measurement has the limitation of not being able to penetrate through to the Earth's surface. Near the surface the air temperature and the surface temperature may be nearly the same. In this case, the atmospheric emission is not distinguishable from the surface emission and the effect of the lower troposphere may be lost. Data reduction in the thermal infrared also becomes more complex because the measurements are strongly dependent on the atmospheric temperature profile, which must be known from some other source before the data can be interpreted.

In general, the passive measurements in the thermal infrared may not be able to penetrate much below 4 Km, and have a vertical resolution which may be in the range from 5 to 8 Km. While measurements in the non-thermal region can penetrate to the ground, the altitude resolution will be in the same range.

The following sections describe the operation and characteristics of each of the selected generic sensors.

3.3.1.1 Interferometer Spectrometer

The interferometer spectrometer provides the means for measuring the spectral radiance of the upwelling atmospheric radiation with very high resolution over wide spectral bands. Although there are many possible optical configurations, basically they all employ a Michelson interferometer, as shown in Figure 3.3.1.1-1. The incident radiation is divided by the Beamsplitter D, into two approximately equal components. After reflection from the movable

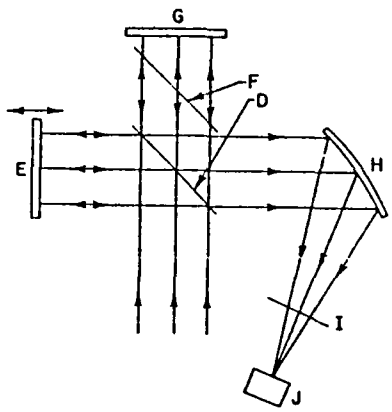

Basic Michelson interferometer.

D: Beamsplitter. E: Movable mirror. F: Compensator. G: Fixed mirror. H: Focusing mirror. I: Spectral filters. J: Detector.

FIGURE 3.3.1.1-1. INTERFEROMETER SPECTROMETER

and fixed Mirrors E and G, respectively, the two beams recombine and interfere with each other with a phase difference which depends on the optical path difference between the two beams. The recombined beam is focused on the detector and the signal recorded as a function of the optical path difference between the two beams. This signal is called the interferogram. The spectrum of the incident radiation is reconstructed by a computer and is the Fourier transform of the interferogram. The magnitude of the computation required to derive the spectrum from the interferogram is a function of the required spectral bandwidth and resolution. If the spectral frequency range of interest is from $\underline{\sigma}_{max}$ cm^{-1} to $\underline{\sigma}_{min}$ cm^{-1}, then the interferogram must be sampled at equal path difference intervals given by:

$$\Delta \delta \quad \frac{1}{2(\sigma_{max} - \sigma_{min})} \quad cm$$

If the required spectral resolution is $\Delta \sigma$ cm^{-1}, then the optical path difference which must be scanned is given by:

$$L = \frac{1}{\Delta \sigma} \text{ cm}$$

The minimum number of data points which must be sampled is given by:

$$N = \frac{L}{\Delta \sigma}$$

$$= \frac{2(\sigma_{max} - \sigma_{min})}{\Delta \sigma}$$

As an example, if a spectral resolution of 0.01 cm^{-1} is required over a spectral range of 5000 cm^{-1}, then the minimum number of data points required is:

$$N = \frac{2 \times 5000}{0.01}$$

$$= 10^6$$

The interferometer, or Fourier Spectrometer, permits the measurement of spectral radiance of the atmosphere with high spectral resolution over very wide spectral bands within the infrared spectral region (typically 2-14 micrometers). For this reason it would be a useful spectral survey instrument. In using the interferometer as a survey instrument, the resolution and S/N ratio should be high enough to resolve weak individual spectral lines. For a nadir looking measurement, the resolution need not be as high as that corresponding to an individual spectral line whose shape is to be accurately measured. Resolutions in the order of 0.05 to 0.1 cm^{-1} may be acceptable for survey purposes. By degrading the acceptable resolution, the sensor FOV can be increased, thus producing improvements in the S/N ratio, or decreasing integration time.

For a sensor operating in a nadir viewing mode, the incident radiation on the sensor is primarily due to thermal emission from the Earth and atmosphere at wavelengths greater than 3.5 microns, and reflected solar radiation at wavelengths less than 3.5 microns. In the thermal infrared region the interpretation of spectral information is more complex due to its dependence on atmospheric and surface temperature. This information may not be readily available unless the sensor complement makes provision for its measurement. In the non-thermal infrared region, the observable that is measured is the

absorption of the reflected solar radiation. The absorption is not significantly affected by the atmospheric temperatures and does not generally require an accurate temperature measurement for data interpretation. This is similar to the measurements made during a limb looking solar occultation experiment, except that the source radiance is orders of magnitude lower than that in the solar looking experiment. The sensitivity requirements in a nadir looking mode would necessitate active cooling of the sensor detector and fore-optics.

The interferometer spectrometer has capabilities which are similar to those of the laser heterodyne spectrometer (see Section 3.3.1.4) in that it provides a high enough spectral resolution to define the individual spectral line shapes. The width of a weak spectral line is primarily dependent on pressure (i.e., altitude). For a nadir looking atmospheric path, the resulting spectral line in transmission or emission is the result of integrating over a number of atmospheric layers whose spectral line widths vary according to pressure; see Figure 3.3.1.1-2. An inversion of the spectral line shape data will yield concentration vs. altitude information, although an accurate temperature profile may be required to perform this inversion. Depending on the strength of the individual lines and the resultant signal to noise ratio in the measurement, the measurement capabilities should be similar. The interferometer spectrometer, whose potential spectral resolution may be lower, has the advantage that its technology will probably be available sooner for nadir viewing measurements. The disadvantage is that the data rates generated by the sensor are very large compared with species dedicated sensors.

With the development of faster computers, and high capacity random access memories, the possibility exists for on-board data processing in a real time mode. However, the necessity for performing computations of this magnitude may be of questionable value, since the amount of data compression achieved may only be a factor of two. An on-board "quick-look" capability could be accomplished by processing a small subset of data with significantly less computer capability.

3.3.1.2 Partial Scan Interferometer

The partial scan interferometer is a variation of the basic Michelson interferometer in which the spectrum of the incident radiation is not recovered from the interferogram because the total interferogram is not

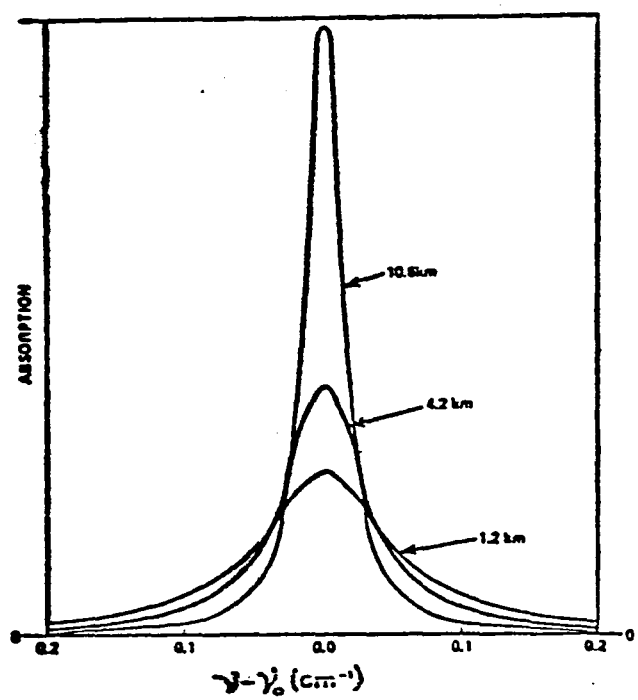

FIGURE 3.3.1.1-2. CONTRIBUTIONS TO THE ABSORPTION PROFILE FOR A THREE-LAYER ATMOSPHERE

measured or recorded. If essentially all the information on any given species (i.e., all the effect of that species on the interferogram) occurs over a small part of the interferogram, only that range of interferogram path difference needs to be scanned. The operation of the partial scan (or correlation) interferometer involves the treatment of the interferogram data directly within the instrument, to obtain data on the species concentrations or total vertical burden; this is in contrast with the use of the spectrum obtained by the Fourier transform of the total interferogram (in this respect, the instrument is fairly "smart"). In such an instrument, the concept of spectral resolution loses its meaning since the spectrum is not recovered from the measurement.

The basic principle of correlation operation may be understood from Figure 3.3.1.2-1. The first two curves show (purely pictorially), the interferograms of a "target" and an "interferent", for example, CO and H_2O. We shall assume initially that the interferogram amplitudes are proportional to the

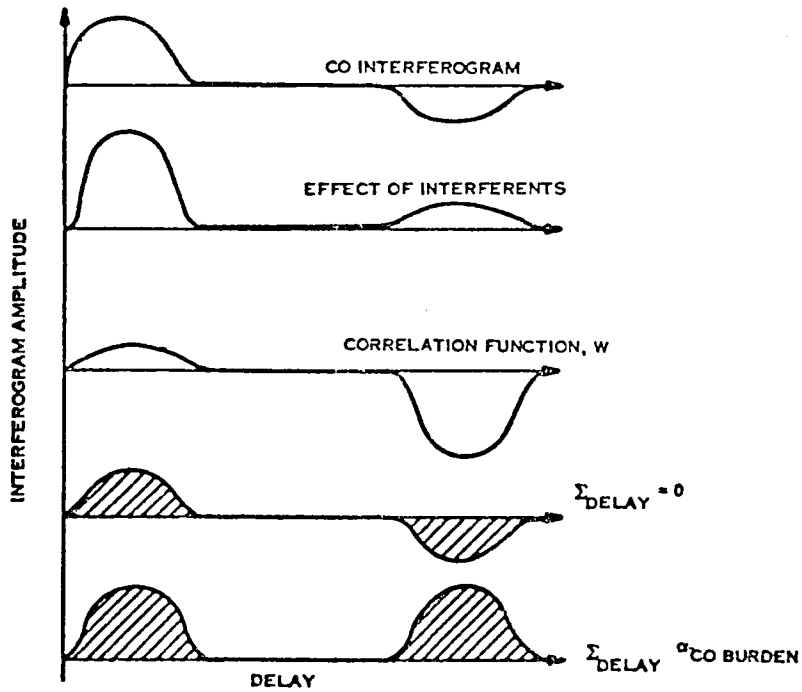

FIGURE 3.3.1.2-1. PRINCIPLES OF MEASUREMENT OF PARTIAL SCAN INTERFEROMETER

amounts of gas present and that if both are present their effects combine linearly. This is not strictly true but the departures can be taken into account. If only random noise were obscuring the CO signal, the optimum means of processing would be to multiply the signal by a stored replica of the noise-free CO interferogram and integrate the result over delay. This stored replica may be described as a correlation or weighting function, W. When we wish to reject interferents as well as random noise we can alter the shape of W so that it satisfies three conditions.

- (W x interferent) summed over delay = 0.
- (W x target) summed over delay = (CO amount).
- (W x random noise) summed over delay = minimum.

Reference: Bortner, M. H., Dick, R., Goldstein, H. W., Grenda, R. N., Levy, G. M., Development of a Breadboard Correlation Interferometer for the Carbon Monoxide Pollution Experiment, NASA CR-112212, March, 1973.

In practice, it is found that the shape of W which rejects the interferents is still very similar to the shape of the CO interferogram.

For measurements made in the non-thermal infrared spectral regions, the derivation and application of the weighting function is fairly well understood since the measurements are relatively insensitive to atmospheric and ground temperature effects. In the thermal infrared (i.e., wavelengths longer than about 3.5 microns), the temperature effects are important and algorithms for species concentration or total burden have not been developed.

The optical configuration of the instrument is essentially that of the simple Michelson interferometers. The change in optical path difference over limited range can be accomplished by the back and forth rotation of a plate of refractive material placed in one arm of the interferometer. A similar interferogram scan can be achieved by fixing the compensator plate and moving one of the mirrors back and forth over a limited range.

The partial scan interferometer is similar to the gas filter radiometer in that it measures the integrated spectral irradiance for a spectral band containing several lines of the species of interest, but the measurement is made in the interferogram-path-difference regime rather than in the spectral domain. Discrimination between the species of interest and the interferent species is performed mathematically and by selecting the interferogram region which minimizes interferent effects.

Concerning the measuring capabilities of the sensor, the sensitivity of the partial scan interferometer has been computed for application to carbon monoxide at 2.3 microns. The resulting measurement is a total burden measurement in the vertical column down to the Earth's surface. The sensor has a burden range of 2×10^2 to 1×10^4 parts per million meter with an accuracy of 20%. The horizontal resolution is 40 km for a 1 second integration time.

3.3.1.3 Gas Filter Radiometer

The gas filter instrument shown schematically in Figure 3.3.1.3-1 is a species-specific correlation radiometer based on non-dispersive infrared technology. Radiation from an external source, which could be thermal radiation from the Earth or reflected solar radiation, passes through the

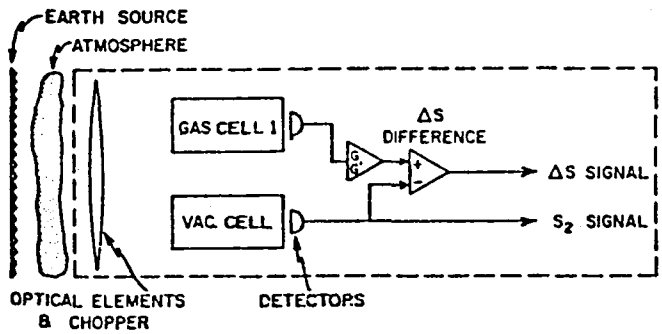

FIGURE 3.3.1.3-1. GAS FILTER RADIOMETER

atmosphere and is spectrally altered by the atmospheric species of interest before entering the instrument. The radiation then passes through two cells, one being evacuated and the second containing a sample of the gas of interest. The gas cell forms a spectral filter which is matched specifically to the species of interest. In one variation of the instrument, the Pressure Modulated Radiometer (PMR), the spectral characteristics of this filter can be varied by changing the amount or pressure of the gas in the cell. The energy transmitted through the two cells is directed to a detection system where the difference in energy between the two paths is measured. This energy difference can be related to the amount of gas of interest in the atmospheric path.

A version of the gas filter radiometer which was designed for operation in the non-thermal region of the spectrum is the DCR (Differential Correlation Radiometer). In this sensor the optical balancing, which nulls the output when no gas is present in the viewing path, is accomplished by a variable shutter in one arm of the optical path. By using multiple gas cells at different pressures the sensor can measure the species concentration as a function of altitude. By operating in the non-thermal spectral region, the temperature effects associated with the atmosphere and Earth's surface become relatively insignificant.

An important feature of operation in this spectral region is the contribution of all molecules of the species being measured to the signal, including those in the lower troposphere. This is in contrast to operation in the thermal spectral region where the temperature differential between the ground and the gas near ground level may not be sufficient to produce measurable signal. However, one problem with operating in the non-thermal spectral region is that the band strengths of the species of interest are generally less than at the longer wavelengths, possibly causing problems associated with lower S/N ratios.

The various types of gas filter radiometers measure integrated spectral irradiance from the atmosphere within a spectral band which may be of the order of 100 cm^{-1} wide and which contains the contribution from several spectral lines of the species of interest. Since the width of the spectral lines due to the gas in the atmospheric path and in the gas cell are a function of the gas pressure, then by varying the pressure of the gas in the optical path, the response of the instrument can be tuned to the radiation from the species within a specified altitude range. Pressure modulation within the gas cell, as in the PMR instrument, would require capability for handling the large range of the modulated pressure and its associated thermally induced errors. Use of alternately interposed discrete filters, each with a different gas pressure, is a more viable approach in tropospheric applications.

The measurement capabilities of the gas filter radiometer can be exemplified by its application in the measurement of carbon monoxide at 4.6 microns with a resulting measurement range of 5.4×10^{11} to 6.7×10^{12} molecules/cm^3 with an accuracy of 20%. The horizontal resolution is 150 Km with an integration time of 10 seconds.

3.3.1.4 Laser Heterodyne Spectrometer

The laser heterodyne spectrometer provides a method of measuring the upwelling radiation from the Earth and atmosphere with spectral resolution which may be as high as 0.001 cm^{-1}, and with sensitivity which is nearly quantum noise limited. This is especially useful in spectrally separating weak pollutant gas signals from spectrally interfering atmospheric species. The sensor, shown schematically in Figure 3.3.1.4-1, is basically a radiometer with a heterodyne detection system using a tunable laser as the local oscillator.

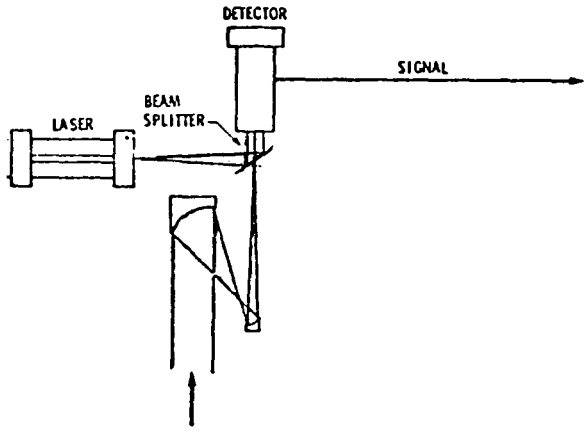

FIGURE 3.3.1.4-1. LASER HETERODYNE SPECTROMETER

The laser heterodyne spectrometer permits the measurement of spectral radiance from the atmosphere with sufficient resolution to accurately define individual spectral line shapes. This information may then be inverted to provide concentration profiles of the atmospheric species. The instrument is generally applicable over a very narrow spectral band, but this is only limited by the range of tunability of the local oscillator used for heterodyning.

The laser heterodyne spectrometer's sensitivity has been calculated for the measurement of ammonia in the 9 to 11 micron spectral region. Assuming a range of concentrations from 2.7×10^{11} to 10^{12} molecules/cm^3, an accuracy of 20%, sensor an integration time of 10 seconds, and horizontal resolution of 70 Km, the expected accuracy of measurement is 20%. Similar sensitivity calculations for ozone at 9.7 microns have been carried out and indicate a minimum sensitivity of 8×10^{11} molecules/cm^3. At this level the accuracy is 100%.

3.3.1.5 Sub-Millimeter Heterodyne Radiometer

The sub-millimeter radiometer was selected as a potential generic sensor for specie concentration measurements in the upper troposphere. Interference by absorption of other atmospheric constituents such as water vapor makes it difficult to measure trace species within the troposphere. The altitude threshold for sub-millimeter radiometry is still unknown, however, we have

included this technique in the AOS baseline due to its potential utility in measuring gases such as OH that are extremely difficult to measure with other passive sensors in the visible and IR regions.

The sub-millimeter region has increasingly become the focus of the interest of the scientific community because it offers the potential of developing a number of novel remote sensing techniques for probing the upper atmosphere. Theoretical studies as well as experimental work has shown that an abundance of spectral lines of important tropospheric species exist in this region. The lines are due to the rotational spectra and there is theoretical evidence that they are as strong or stronger than the molecular vibrations. This suggests the possibility that many species may ultimately be better detected in the sub-millimeter region. The impetus toward developing sub-mm wave sensors is aided by the recent advances of practical receivers. The new receivers are capable of sensitivity of 0.1K and do not require a cryogenic environment. These considerations have to be moderated by the observation that the H_2O absorption in the lower part of the troposphere all but eliminates the possibility of trace species identification through sub-millimeter radiometry, thus leaving only the upper part of the troposphere as a possible candidate.

An extensive compilation of the spectral lines has been prepared by R.L. Poynter. A theoretical model of the atmospheric transmission based on the Air Force Cambridge Research Labs data has been formulated by W. Traub and M. Stier. These contributions clearly indicate that a rich spectrum of strong lines is present. Staelin indicates that O, O_2, O_3, O_4, H_2O, H_2O_2, HC , HNO, NO, N_2O, C O and CO are among the many species that exhibit activity in this region. Table 3.3.1.5-1 shows some of the lines that have been observed and reported in the literature.

The sensor envisioned for AOS is a flight version of the technique now under experimentation at NASA-GSFC. As described to us by Dr. J. Bufton, a newly developed sub-millimeter wave laser acts as a local oscillator in a conventional heterodyne radiometer. It operates in the CW mode and is optically pumped by various lines of a high power CO_2 laser. Typical sub-mm power is tens of a milliwatt for CO_2 pump power of tens of watts. The use of rotational line structure in a variety of host molecules results in a tunable source of sub-mm local oscillator radiation within the spectral range 100 micro meters to 1 mm. This local oscillator is combined with a recently

Table 3.3.1.5-1. SUB-MM Spectral Lines (Partial Sample)

SPECIES	LINES in GHZ							
O_3	38	96	102	118	184.37			
CO	73		115.271	230				
H_2O	22		183.31	325.5	380.4	557.1	621.0	752
$C\ell O$			167.204	204.3	241.5			
N_2O	25		251.2	627	684			
H_2O_2			204.5					
NO			150					
NO_2			15	39	41			
SO_2	20-30		54	70	570			

developed low noise, room temperature Schottky diode mixer to form a complete sub-mm wave radiometer for measurement of atmospheric trace species. This has opened up the possibility of high resolution (KHz) spectroscopy throughout the sub-millimeter region.

Based on atmospheric transmission models, the total transmission below 4 km is negligible. The limb scanning geometry depicted on Figure 3.3.1.5-1 would be suitable. The antenna size would be dependent on the specific spectral region and orbital altitude, as shown in Figure 3.3.1.5-2.

3.3.1.6 Photopolarimeter

Determination of aerosol and other atmospheric particulate concentrations is made by measuring of the difference in polarization from molecular scattering in a "clean" atmosphere as compared with particulate scattering from the contaminated region. Measurements using a photopolarimeter instrument may be compared with calculations of Rayleigh scattering based on existing atmospheric models, thus deriving information on aerosol concentrations over the observed volume. Examples of the basis for such models is Sekera's[1,2]

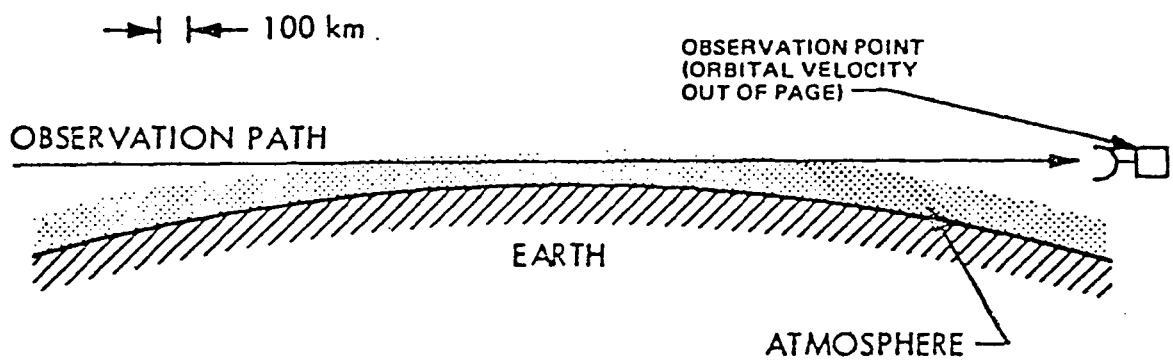

FIGURE 3.3.1.5-1. LIMB SOUNDING GEOMETRY

---

1. Sekera, Z. - "Scattering Functions for Rayleigh Atmospheres of Arbitrary Thickness", RAND R-452-PR, Rand Corp., Santa Monica, Calif., October 1966.

2. Sekera, Z. - "Radiative Transfer in Planetary Atmospheres with Imperfect Scattering", RAND R-143-PR, Rand Corp., Santa Monica, Calif., June 1963.

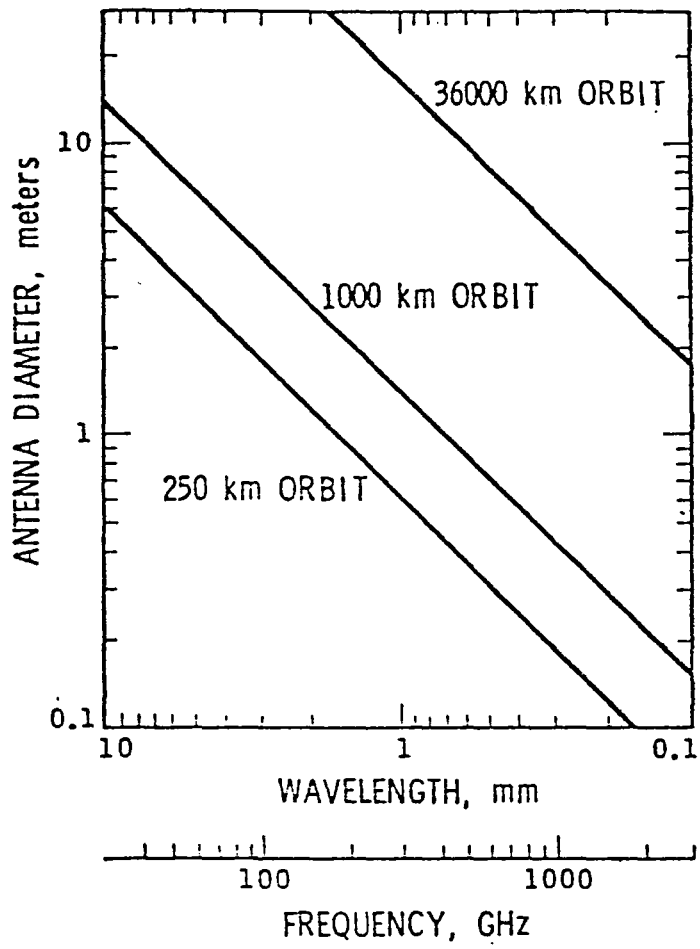

(The antenna diameter required for other beamwidths is inversely proportional to the beamwidth. For example, a 1 1/2 km beamwidth requires an antenna twice as large as indicated by the above curves.)

Figure 3.3.1.5-2. Antenna Diameter Requirement for 3 km Beamwidth at Tangent Point for Limb Observations

extension of the solution to the Rayleigh scattering problem for arbitrary optical thicknesses, making allowances for imperfect scattering.

In connection with aerosol scattering, computer programs are available to compute the intensity distribution of emergent radiant for quite arbitrary scattering phase functions. The availability of such programs makes the measurement program all the more attractive since scattering processes in a "real" atmosphere may now be more accurately described. Some theoretical studies have been initiated toward solving the inversion problem. Sekera[3] has shown how independent estimates of optical thickness and albedo of a Lambert Surface can be derived from satellite measurements, assuming a molecular scattering atmospheres. Skylight polarizations of turbid atmospheres differ from those of non-turbid (Rayleigh) atmospheres. Thus the polarization of reflected and scattered radiation is important to the interpretation of emerging radiation flux in terms of atmospheric and earth surface components. This is particularly relevant in tropospheric measurements from space, since the operation mode is downviewing, as compared with the solar occultation mode (e.g., using sensors such as Stratospheric Aerosol Measurement, SAM II).

The photopolarimeter measures the Stokes polarization parameters, which are defined as follows: If a polarized light beam passes through an analyzer with the transmission plan deviated by the angle O from the vertical direction and then through retardation plate, introducing a phase difference ___ between the vertical and the horizontal oscillations of the electric vector, then the intensity of light emerging from the retardation plate is:

$$I(\emptyset) = 1/2\,(I + Q\cos 2\emptyset + U\sin 2\emptyset)$$

---

3. Sekera, Z. - "Determination of Atmospheric Parameters from Measurement of Polarization of Upward Radiation by Satellite or Space Probe", RAND Report RM-5158-PR, Rand Corp., Santa Monica, Calif., October 1966.

where I, Q, U are the Stokes parameters of the measured light stream. They define the state of polarization of the light stream: I = total intensity, Q = difference between the intensity components in the vertical and horizontal direction; U = Q tan 2i, where i is the inclination of the plane of polarization from the vertical direction. The ellipticity parameter, "V" is small in atmospheric scattering, and therefore is disregarded.

Measurement of the Stokes parameters is accomplished by precision subtraction of polarized and unpolarized beams, as viewed by corresponding dectector elements in three solid state linear arrays A, B, and C, each permitting a different polarization mode, as follows.

The basic expressions that relate the stokes parameters to the three measured polarization modes of the instruments are: I=C, Q=C/2-A, U=C/2-B. All measurements will be made in several spectral bands in the visible and near infrared (e.g., 5,000, 7,500, and 10,000 angstroms) to permit estimates of aerosol atmospheric thickness from wavelength dependence characteristics of the radiation scattered from the atmosphere (e.g., molecular scattering is generally associated with the shorter wavelengths, whereas the aerosol scattering relates to the longer wavelengths).

The original instrument, developed under the Advanced Applications Flight Experiments (AAFE), had a field of view of 3° and the three channels at 3800, 5000, and 5800 angstroms. Initial experiments indicated the

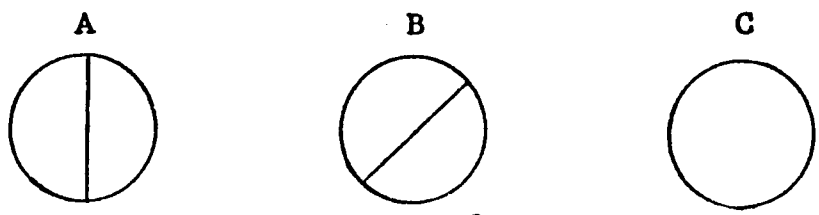

Vertical Polarization | 45° Polarization | Unpolarized

Stokes Parameters

$$I = C$$
$$Q = C/2 - A = IP \cos 2\beta$$
$$U = C/2 - B = IP \sin 2\beta$$

I = TOTAL INTENSITY
P = DEGREE OF POLARIZATION
β = ORIENTATION OF PLANE (FROM HORIZONTAL)

desirability of expanding the wavelength to the near infrared region around one micron, to attain better response from aerosols. In addition to the increase in the upper limit of wavelength, the generic photopolarimeter envisioned for AOS would employ a linear array of detectors to permit operation in the push-broom mode. This will make it possible to map aerosol concentrations over a larger swath without the need for a rotating scan-mirror in the sensor. In addition, the integration time for each resolution element will be increased through the use of the push-broom mode, thus attaining higher sensitivity.

In addition to polarization data, the sensing technique requires accurate information concerning Sun angle, since polarization intensity is dependent upon these parameters. This can be obtained through accurate knowledge of the satellite ephemeris and the altitude relative to geocentric coordinates. In cases where a Sun-synchronous orbit is selected the problem will be facilitated since the solar angle will be constant.

The characteristics of the instrument concept depicted in Figure 3.3.1.6-1 are as follows:

Polarimeter Element (typical)	:	Glan Thompson type
Length/Aperture Ratio	:	2.5
Polarized F.O.V.	:	17°
Extinction Ratio	:	10^5 to 5×10^5
Residual Deviation	:	3 minutes of arc
Spectral Transmissions	:	0.3 to 2.3 microns
Detector Arrays	:	Three per polarization made at 0.5, 0.75 and 1.0 micron. Twenty-two discrete elements per array, each covering 46.4 minutes of arc (corresponds with ground resolution 10 km from 750 km altitude).
Spectral Filters	:	One hundred angstroms bandwidth 30% transmission.

An assessment of the degree to which the photopolarimeter technique will satisfy the measurement requirements would be difficult until initial experimental data is obtained to match the theoretical calculations. One of

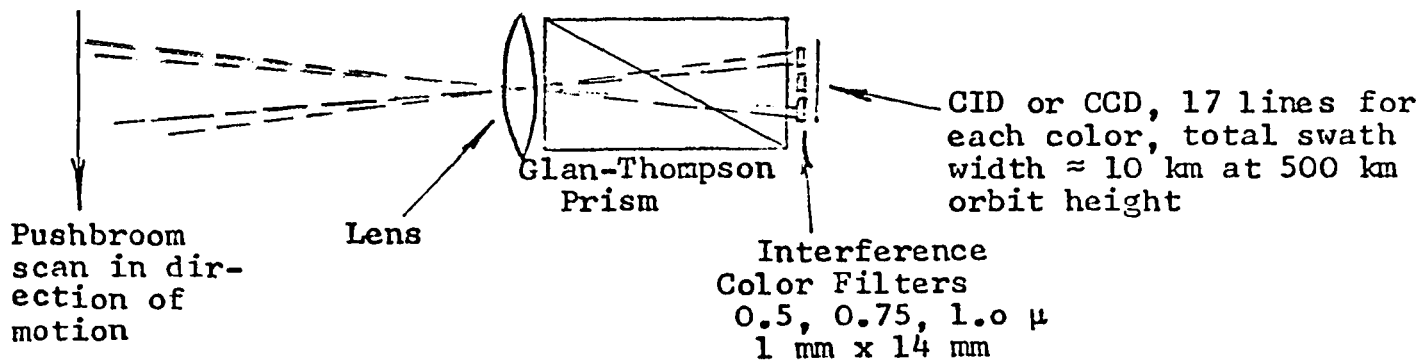

ELEVATION VIEW, VERTICAL POLARIZATION CHANNEL

PRINCIPLE OF OPERATION: MEASUREMENT OF STOKES PARAMETERS I, Q AND U BY PRECISION SUBTRACTION OF POLARIZED AND UNPOLARIZED BEAMS VIEWED BY THREE SEPARATE SOLID STATE IMAGING ARRAYS. MEASUREMENT OF SEVERAL WAVELENGTHS IN VISIBLE AND NEAR IR ALLOWS ESTIMATE OF AEROSOL ATMOSPHERIC THICKNESS FROM WAVELENGTH DEPENDENCE AND DEPOLARIZING EFFECT WHEN VIEWING LOW ALBEDO EARTH TARGETS AT OBLIQUE ANGLES

Figure 3.3.1.6-1. Photopolarimeter for Aerosol Measurements

the most challenging aspects of the aerosol measurement technology is the development of data inversion techniques that operate on a downviewing mode and that are applicable to the troposphere. Dr. A Depak and Pi-Huan Wang have reported on their success in developing initial codes which generally may be applicable to this problem. These efforts should be expanded to address the specific requirements of AOS. Total aerosol burden measurements are very probable whereas aerosol size distribution and number density measurements are less certain. Horizontal resolution requirements can be met, but vertical profile may be limited to one or two layers in the troposphere. Nevertheless, global mapping of aerosol burden would be extremely useful in tropospheric research due to its vital link with radiative transfer investigations; therefore, they will fill the data gap until more advanced techniques are developed in the future.

3.3.1.7 Imaging Spectroradiometer

This instrument has been selected to measure the surface temperature of the Earth in order to aid in the measurements of species concentration as well as the radiative properties of the atmosphere. A realistic accuracy goal for this measurement is 0.5 K to 1.0 K. Other applications of the sensor are as follows:

1. Determination of surface features important in the establishment of sinks and sources.
2. The measurement of the degree of cloud cover.
3. The cloud trajectory and velocities.
4. Estimate of the degree of turbidity in regions in the atmosphere (to be correlated with the photopolarimeter data).

A solid state pushbroom sensor has been selected for this application. It is a version of a multispectral linear array. The push-broom technique uses electronic scanning in the linear detector array to scan the ground swath across the satellite track, and satellite motion to scan along the track. There are two main advantages realized through the use of the push-broom sensor, namely the improvement in the signal to noise ratio through longer integration time per pixel and the elimination of rotating components which may introduce vibratory disturbances.

The resolution required from the imaging spectroradiometer will be fairly coarse as compared to those employed in earth observation applications for resource management. The seven kilometer horizontal resolution that has been selected will provide sufficient oversampling to facilitate the geometric corrections that will be performed on the data. With this type of resolution, the number of elements per linear array will be relatively few and this may be able to be accomplished through the use of discrete detector elements as opposed to very high-density linear arrays. Table 3.3.1.7-1 shows the number of detector elements for each spectral band as required for various swath angles and orbital altitudes. The requirements include: (a) accommodation of 75 individual detector elements, (b) radiometric accuracy in the order of 0.2%, (c) uniformity of characteristics from one element to the other, which is important in order to prevent or avoid a complex calibration problem in the data processing.

The spectral bands selected for this instrument are as follows: one channel was selected in the thermal infrared for measurements of surface temperature; the preliminary choice of 11 micron has been selected. A near infrared channel has been selected at 3.7 micron for both in correlation with the 11 micron channel and for determination of surface features. For cloud cover, we have selected a center frequency of 0.7 micron. There will be two additional

TABLE 3.3.1.7-1. NUMBER OF PIXELS PER SWATH PER CHANNEL IN THE IMAGING SPECTRORADIOMETER

	PIXELS PER SWATH AT GIVEN ALTITUDE				
SWATH ANGLE	300 km	400 km	500 km	600 km	700 km
10°	8	10	13	15	18
20°	15	20	25	30	35
30°	12	31	39	46	54
40°	32	42	52	63	73

channels in the visible region and these will correspond to the wavelengths selected for the photopolarimeter.

Each of the photodiodes will be coupled to a Charge Coupled Device (CCD), therefore the stored charges will be read out serially at intervals by the CCD multiplexer. Special hybrid chips have been developed for this purpose,

although the technology is somewhat embrionic particularly in the infrared region. This technology will be discussed in more detail in Section 6.2. The detectors will be cryogenically cooled in order to improve their signal to noise characteristics.

3.3.1.8 Temperature Sounder

This sensor will be required to measure the vertical temperature profile of the troposphere from the surface to the stratosphere. One of the instruments that best matches the requirements is the HIRS or the High Resolution Infrared Sounder which is a third generation sensor designed for measurements of temperature profile in the lower atmosphere. The HIRS contains 17 channels ranging from 0.69 micron to 15 micron, however, the needs of the AOS Program can be addressed by 12 channels in the regions of 4.2 to 4.6 micron and 13 to 15 micron. It is envisioned that the generic sensor for the AOS Missions will be an upgraded version of the HIRS, to attain a higher degree of accuracy in the vertical profile measurement. A stringent requirements of 0.2 K accuracy for the measurement of surface temperature is linked to the determination of climatology for the ozone deposition and destruction rates at the Earth surface.

Due to the variety of land and ocean surfaces to be measured around the world, it will be very challenging to attain the 0.2^{o} accuracy. Tradeoffs between sensor complexity and data reduction complexity versus relaxation of the surface temperature accuracy requirements will be in order, prior to implementation of the AOS.

3.3.2 ACTIVE SENSORS

Tropospheric measurement techniques using artificial illumination were considered in the optical, microwave and sub-millimeter spectral regions. The most useful actively illuminated regions for measuring trace species are the atmospheric windows ultraviolet, visible and infrared, up to and incuding the thermal IR. The microwave region is not suitable for this type measurement due to its large wavelength compared with the size of the particles measured. In the sub-millimeter region, there are many absorption lines that would be useful in gas concentration measurements, however, the high degree of interference offered by water vapor in the lower atmosphere makes sub-mm an unlikely candidate for tropospheric measurements, as discussed in Section 3.3.1.5 above.

The following discussion of active sensors is restricted to the sensing technique that shows most promise for measuring gas concentrations in the troposphere, namely LIDAR.

3.3.2.1 LIDAR

This is a form of active optical scatterometry whose usefulness lies in the areas of measuring the total aerosol distribution, the concentration profiles of aerosols and trace gases, as well as wind vectors. Three basic LIDAR techniques are applicable to AOS:

1. Differential range absorption LIDAR (DRAL) - For aerosol or gas density measurements where no clean absorption line exists.
2. Differential absorption LIDAR (DIAL) - For measurements of trace concentrations of aerosols and gases.
3. Scattering LIDAR (Elastic Scattering) - For wind velocity and direction by gated doppler measurements and total aerosol distributions.

The three basic LIDAR techniques may be accompanied by several variations in LIDAR equipment which involve the detection process. Two primary detection processes are used in LIDAR systems. The first process is the simple photon detection technique which involves photo-emissive photo-voltaic or photo-resistive detectors, with quantum efficiencies ranging from a high of near 50% to a low of a few tenths of a percent depending upon the detector type and the wavelength of light being detected. These detectors are all relatively broad band so the bandwidth of the receiving system, and hence the capability of the system to discriminate against background noise is strictly a function of the bandwidth obtainable in the predetection optical filter. The second detection process, which can be used with good results in LIDAR systems, is the heterodyne method of detection. This process is identical to the heterodyne technique used at radio frequencies except that the local oscillator signal is another laser-generated optical signal which is separated from the received signal by an amount equal to the intermediate frequency amplifier frequency, nominally between 1 and 2 GHz. The bandwidth of the heterodyne detector is limited by the post detection bandwidth of the IF amplifier, which is characteristically in the order of one-one thousandth of the spectral width of a predetection filter. The heterodyne detection system can be used in all three of the basic LIDAR techniques. It is requied, however, in the third technique for measuring wind direction and velocity

since the heterodyne detection system alone has the narrow bandwidth and frequency sensitivity required to measure tropospheric winds with any useable precision.

The following is a brief description of the principle of operation of each of the basic LIDAR techniques, followed by a general discussion (applicable to all three techniques) of the characteristics of the principal LIDAR elements and their measurement capabilities relative to AOS.

Differential Range Absorption LIDAR (DRAL)

In the Differential Range Absorption LIDAR, laser pulses at a single wavelength are transmitted and light is scattered from aerosols and molecules in the light path. In this technique the laser is fired and as the backscattered light returns to the receiver and is detected, the signals are collected in sequential time slots called range bins, with each succeeding time slot, or range bin, representing signals which were collected further from the transmitter than the preceeding one. A differential signal is then generated by comparing the signal level in one range bin with the signal level in the next. Each succeeding signal will have a lower level, due to absorption. The differential range absorption LIDAR is generally used in detecting materials such as ozone in the near UV region of the spectrum, which does not have absorption lines in that region but rather a very broad absorption band. Frequency stability and narrow bandwidth are not required for broad band applications such as this.

Differential Absorption LIDAR (DIAL)

The Differential Absorption LIDAR System operates by making two simultaneous aerosol backscatter measurements at different wavelengths in the same atmospheric volume element. One wavelength corresponds to the wavelength of an absorption line of the specie of interest, while the other wavelength is near the absorption line but in a clear area where no absorption or fluorescence lines or bands are found. The two signals are normalized to account for systematic differences and then compared. The difference between the two normalized backscatter intensities is due to the effect of the specie absorption. If the absorption characteristics of the specie are known, then the concentration of the specie between the LIDAR and the range measured can be calculated by examining range elements from a spacecraft or aircraft to the ground. Both the total burden and the distribution of the specie along the

line of sight of the LIDAR can be calculated. The technique is depicted in Figure 3.3.2.1-1. The DIAL LIDAR system requirements depend upon the particular specie which one wishes to measure. Most trace specie have relatively narrow absorption line widths in the atmosphere when compared with conventional pulsed laser line widths. If, for example, a dye laser is used as the transmitter, the extreme line narrowing techniques are required to get the on-line laser bandwidth down to a useable level. The offline, that is the laser line used to probe the clear area of the spectrum adjacent to the absorption line, has no criticality of line width. The online laser line width, however, must be at least as narrow as the absorption line or the energy which falls outside the absorption line will not be absorbed and will give a large backscatter from the aerosol. This will give false indications that the concentration of the measured specie is actually less than it actually is. In practice, the line width is made much narrower than the absorption line width to reduce errors in data reduction from energy outside the absorption line width. The narrow line width requires that some method of tuning the laser to the peak of the absorption line be included as part of the laser system. Typically, this is done with a grating inside the laser optical cavity and some wavelength reference. For strongly absorbing species a reference gas cell containing some of the specie in the gaseous state at a low pressure can be used as a wavelength reference. For weekly absorbing species the tuning control loop can be slaved to the output of the normalized receivers to tune the laser for the maximum difference between the online and the offline wavelengths. In heterodyne applications, either of the above methods may be used in addition to frequency comparison with a laser at a nearly known wavelength. Heterodyne systems with gas laser transmitters and local oscillators are ideally suited to dial measurements since the laser lines must be very narrow in line width (less than a few megahertz) and held to very precise frequencies for heterodyne operation to be possible, since the coherency requirements for heterodyne operation are extremely critical. In wind velocity measurements, for example, the transmitting laser bandwidth must be limited by the Laplace transform of the transmitted pulse. To the first order, the transform limited bandwidth is approximately equal to the reciprocal of the pulse length in seconds. Typically, for measuring wind velocities in the order of one meter per second it is necessary to have pulse lengths of about 6 microseconds and bandwidths less than 200 kilohertz.

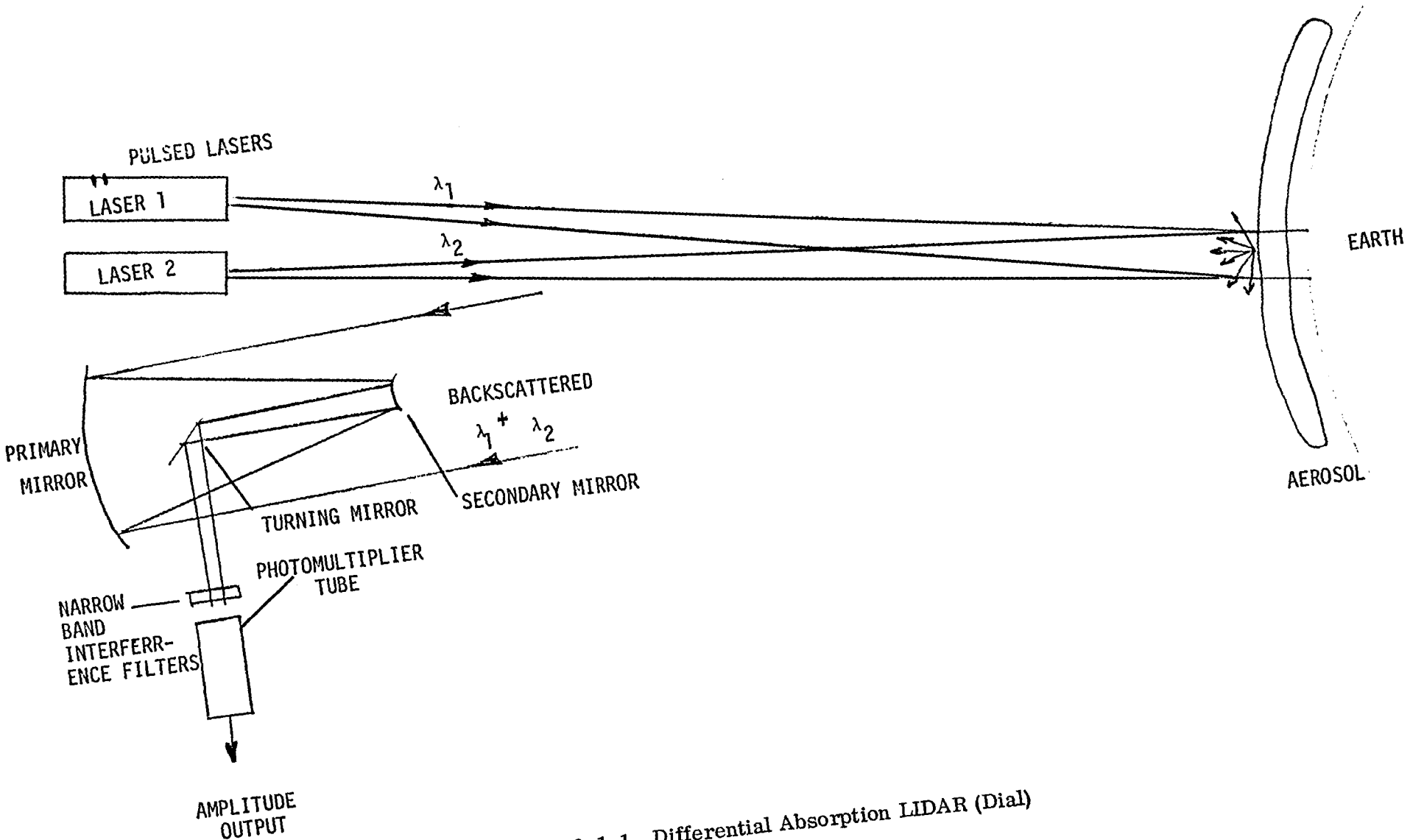

Figure 3.3.2.1-1. Differential Absorption LIDAR (Dial)

Scattering LIDAR

This technique is used primarily in measuring aerosol number density (as a function of backscatter signal strength and as a function of range) and wind velocity vector components (as a function of doppler shift due to aerosol motion). The detection of wind speed and direction is accomplished with a single frequency, pulsed laser transmitter and a heterodyne receiver. In the practical systems built to date, as with those proposed for space flight use in the 1990's, a CO_2 gas laser transmitter operating in the 9 to 12 micrometer region is used. This laser is pulsed, with a pulse which is about 6 microseconds in length and nearly transform limited in bandwidth. The pulse is transmitted through and scattered by the aerosols as it passes through the atmosphere. The backscatter light is collected by the receiver and put on the surface of a cooled (H_e C_d T_e) detector. At the same time, a CW local oscillator signal is also put onto the surface of the detector. Since the detector operates as a square-law device several frequencies are produced, notably the sum of the two arriving frequencies, their difference, their product, and others. All the frequencies except the difference frequency are in the optical region of the spectrum and are lost or absorbed, but the difference frequency, which is set to be a few gigahertz, is retained and fed to the input of an RF amplifier. By the characteristics of the detection process, this difference frequency contains all the amplitude and frequency deviation information which was contained in the original backscattered light signal. This intermediate frequency is amplified detected and displayed. The amplitude of the detected signal is a function of the population density and size of the aerosol scattering units. The frequency deviation from the center frequency is a function of the velocity of the aerosol along the path of the line of sight of the laser transmitter, while the time from the firing of the laser transmitter is proportional to the range of the scattering volume from the laser transmitter. The scattering volume is a function of the pulse length of the laser and the transmitted beam divergence. Practical systems will have a pulse length of about 6 microseconds, which gives a resolution along the laser line of sight of about 1 kilometer and beam divergences of about 10^{-4} radian which at a range of 800 Km (a possible slant range from a low Earth orbit satellite) gives a beam diameter of 80 meters in the lower atmosphere. This heterodyne system can be used for DIAL (the CO_2 laser can be made to operate simultaneously on two near wavelengths), for DRAL (with a single wavelength) and for elastic scattering LIDAR systems.

Figure 3.3.2.1-2 depicts the LIDAR system using a single laser heterodyne application.

Scattering LIDAR can also be used in a resonance scattering mode of operation. This technique is the most sensitive of all LIDAR systems to trace species but it is generally limited to high altitudes where the pressure is low. In this application, the laser wavelength is tuned exactly on to a resonance line of the specie in question. When the laser is fired into an aerosol containing the specie, the specie molecules fluoresce and the fluorescence light is detected by the receiver.

3.3.2.2 LIDAR Performance Characteristics

The DIAL technique is an extremely sensitive method of indicating the concentration of trace species. Difficulties arise only when the concentrations are so high that all of the on-line signal is absorbed on the way back to the receiver after being scattered.

The resonance scattering technique is the most sensitive of these measurement technique since it depends on resonant fluorescence characteristics of the specie molecule. Unfortunately, very few of the contaminant species exhibit this behavior, and few of those which fluoresce do so in a spectral region which can be reached with lasers.

The least sensitive detection technique is that of elastic scattering. This technique, however, is identified only for the detection of winds at the lower altitudes where the population density of scattering particles and droplets is high.

The main species and other measurements that were considered for measurement with the advanced laser sensor are listed in Table 3.3.2.2-1. The entries in the table summarize the sensor capability on each specie or measurement as the study estimated those capabilities.

The specific problems to be expected in using the various laser systems identified in Table 3.3.2.2-1 vary depending on the particular laser employed. The receiving telescope portion of the system presents no unusual problems, nor do any of the ancillary or support subsystems since similar types of items have already been successfully flown in space.

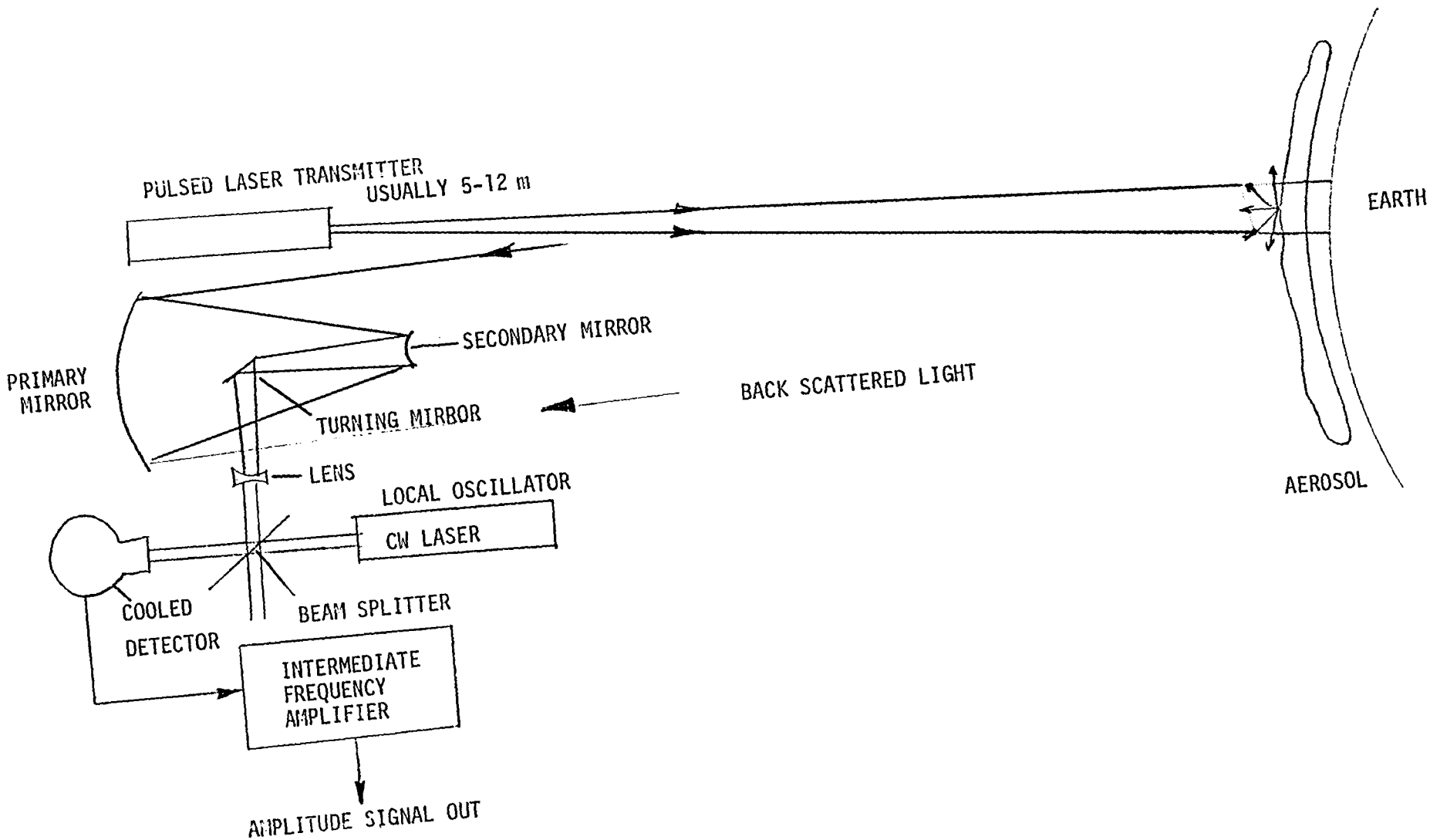

Figure 3.3.2.1-2. Heterodyne Laser System

Table 3.3.2.2-1 Typical Measurement Capabilities of Advance LIDAR Sensor

SPECIE OR MEASUREMENT	LIDAR TYPE	SPEC. RANGE	ACCURACY	PRECISION	VERT. RES.	INTEG. TIME	ORBIT
O_3	CO_2 HET. DIAL	10^2 - 3×10^2 PPM-M	20%	2%	1 KM	6.67 MS	LOW EARTH APPROX. 300 KM
H_2O	CO_2 HET. DIAL	2×10^6 - 1.6×10^8 PPM-M	20%	2%	0-10 KM 1 KM 10-20 KM 2 KM	6.67 MS 13.3 MS	LOW EARTH APPROX. 300 KM
HNO_3	THIS MEASUREMENT CAN BE FORESEEN TO BE DONE ONLY AS A LIMB MEASUREMENT. DETAILED EXPERIMENT SIMULATION MAY ALLOW DIAL MEASUREMENT.						
NH_3	CO_2 HET. DIAL	4×10^{-1} PPM-M	15%	5%	1 KM	6.67 MS	LOW EARTH APPROX. 300 KM
CO	DOUBLED CO_2 HET. DIAL PPM-M	2.8×10^{-2} - 2.8×10^3	15%	5%	10 KM	66.7 MS	LOW EARTH APPROX. 300 KM
NO	DYE OR EXCIMER RESONANCE SCATTERING	1-3 PPM	25%	3%	5 KM	33.4 MS	LOW EARTH APPROX. 300 KM
SO_2 N_2SO_4	LASER TYPE NOT ESTABLISHED. DETAILED EXPERIMENT SIMULATION REQUIRED.						
WIND	CO_2 HET.	1 M/S TO 50 M/S	10%	1%	1 KM	6.67 MS	800 KM POLAR FOR FULL EARTH COVERAGE

In a practical operating system, the method of implementation depends upon the wavelength region where the measurement is to be made since different types of lasers are required for different spectral regions. In the ultra-violet, visible, and near infrared approaching 1 micrometer, the only tuneable lasers available with the energy output levels required are dye lasers which are usually pumped Nd:YAG, or Excimer lasers which may be doubled or tripled. In this spectral area two lasers are required for a DIAL System. Two lasers are required with a dye system since only one wavelength is generated at a time. In the infrared, between 5 and 10 micrometers, only one laser is required because CO_2, doubled CO_2 or CO lasers can generate two simultaneous nearby wavelengths. In the ultra-violet and blue areas of the spectrum the Excimer Laser offers hope for future applications. This class of lasers utilize gases such as XeCL, XeF, ArF, KrF and others which may be used in systems in a manner similar to the CO_2 systems presently in use.

The Study results indicate, however, that for many of the species the advanced sensor of promise is the CO_2 Pulsed Laser with a heterodyne detection capability and either one wavelength (for wind and scattering measurements) or two wavelengths (for gaseous species measurements). This laser system will operate in the 10 micrometer atmospheric window over the spectral range between 9 and 11 micrometers. Most molecular species have absorption lines in this spectral area, but a few species which do not have any identified lines in this area can be detected by resonance scattering (2.5 mm in the case of NO) using either a doubled or tripled dye laser or an Excimer pumped dye laser. Other species which have no identified absorption lines in the 9 to 11 micrometer region may be detected by visible or UV dial using two dye or two Excimer lasers. Additional experiment simulation is required, however, to adequately define these experiments.

The characteristics of the advanced sensors for the above spectral areas are similar to those described for the Atmospheric LIDAR Multi-User Instrument System Definition Study which was recently completed for NASA by GE. These characteristics are shown in Table 3.3.2.2-2.

A sketch of the system as was proposed for a Shuttle Payload is shown in Figure 3.3.2.2-1. A LIDAR System for a dedicated satellite payload would have similar dimensions since the interface requirements of the lasers and the telescope are similar.

Table 3.3.2.2-2 Performance Characteristics of Advanced LIDAR Systems

TRANSMITTER	CO_2 HETERODYNE SYSTEM	EXCIMER LASER SYSTEM
WAVELENGTH RANGE	9-11 MICROMETERS 4.5 - 5.5 MICROMETERS	APPROXIMATELY 150 TO 350 NM
ENERGY OUT	10J PER PULSE AT EACH OF TWO WAVELENGTHS	0.5 TO 10J
PULSE RATE	15 HZ MAX	15 HZ MAX
PULSE WIDTH	2 TO 6 MICROSECONDS	5 TO 1000 NS
BANDWIDTH	200 TO 600 KHZ (TRANSFORM LIMITED)	WIDE
EXCITATION	E-BEAM SUSTAINED ELECTRIC DISCHARGE	TRANSVERSE ELECTRIC DISCHARGE OR E-BEAM SUSTAINED ELECTRIC DISCHARGE
WALL PLUG EFFICIENCY	APPROXIMATELY 7%	.1% TO .5%
RECEIVER		
RECEIVER SIZE	1.25 M DIAMETER	
TELESCOPE TYPE	CASSEGRAIN	
DETECTOR(S)	CRYOGENICALLY COOLED - HG CD TE	PHOTOMULTIPLIER TUBES
DETECTION PROCESS	HETERODYNE	PHOTON COUNTING
DETECTION CAPABILITY	HETERODYNE EFFICIENCY 30% OVERALL	QUANTUM EFFICIENCY 25% TO 35%
NOISE	QUANTUM NOISE LIMITED	
SIGNAL PROCESSOR		
ON-BOARD	AUTOMATIC GAIN ADJUSTED WITH 100 RANGE BINS OF 0.3 KM (1 MICROSECOND) EACH IN EACH OF TWO PROCESSORS.	
ON-GROUND	COMPUTER NORMALIZATION AND DATA REDUCTION	
POINTING AND SCANNING	TELESCOPE NADIR POINTING, POINTED OR SCANNED IN CIRCULAR SCAN FOR WIND MEASUREMENTS, SCAN ANGLE DEPENDS ON ORBIT ALTITUDE AND COVERAGE DESIRED.	

The dye laser is representative of the type of laser which is the near to being space-ready as shown by the results of the Atmospheric LIDAR Multi-User Instrument System Study which was referenced earlier. With the exception of the lifetime problem, which is being addressed presently, the present level of dye laser technology is adequate to produce a space qualified dye laser system.

The next level of technology is that for the Pulsed CO_2 Laser System. The electron beam sustained narrowband CO_2 laser technology has produced lasers with pulse energies and repetition rates far in excess of the values required for most contaminant species. Although no pulsed CO_2 Heterodyne Systems have been put into space, considerable airplane flight test time has been accumulated. One area of the CO_2 System where a problem exists is in the cooling of the detectors. The HgCdTe detectors must be cooled to liquid nitrogen temperatures. Several cryogenic systems are currently under development for space use, as will be discussed in Section 6.2.2.

The Excimer Laser System, on the other hand, requires the most in technology advancement. Excimer Systems in the laboratory do now barely produce the energy levels required for the advanced laser sensor. At the present rate of technology advancement, it is expected that by the late 1980's the Excimer Laser Technology will be ready to take the step to space qualification if the market for space qualified lasers can be shown to exist.

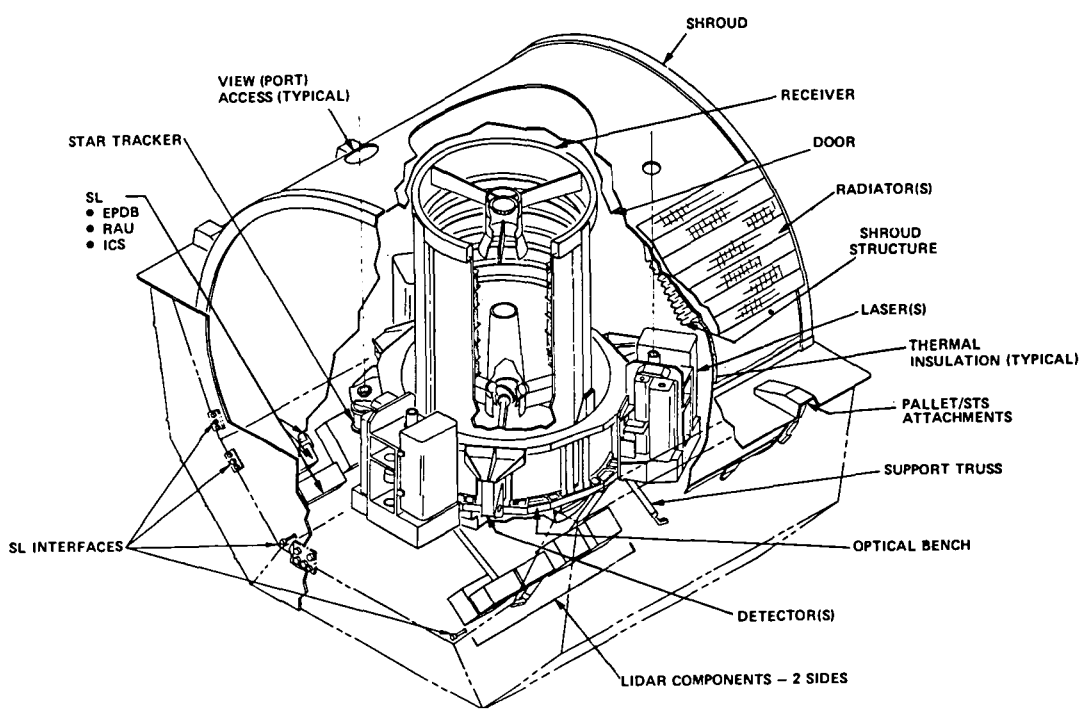

Figure 3.3.2.2-1 System Arrangement for Shuttle Based Version of Advanced Laser Sensor

SECTION 4

MISSION DEFINITION

SECTION 4
MISSIONS DEFINITION

The objective of this task was to provide a mission and operations basis for the assessment of sensor, spacecraft systems, and data system technology needs. This basis was established by synthesizing space flight missions for tropospheric research and complementary missions. The missions are defined in terms of the selected measurements, orbits, generic sensors, and type of spacecraft needed to perform the mission. From the six missions that were synthesized two were selected in order to provide a focus for design and technology assessment. These missions were selected on the basis of their technological challenge and their correspondence with a timeframe in the early 1990's. The basis for the missions was the measurement needs and the sensor selections in Task 1.

The task was iterative. Initially, a set of missions was postulated for accomplishing the measurement in Task 1, and sensor packages were assembled to fit them. Adjustments were made to the missions and the sensor concepts to allow for variations in orbital parameters such as altitude which have a large bearing on the sensor characteristics.

An important aspect of the missions is that they permit concurrent, complementary measurements of gaseous species concentrations, aerosol concentrations, and meteorological data; that is, the need for measurements that are performed at approximately the same time and from the same platform. Where a particular measurement requires global coverage, this does not necessarily involve a constant horizontal or vertical resolution in all regions of the Earth; the resolution depends on the needs in particular regions, especially those which represent the sources or sinks of the trace species under consideration. Our approach was to consider that the Atmospheric Observation System capability could not be realistically attained through one satellite flight program, but rather in an evolutionary way involving several steps of increasing complexity. Finally, the AOS Missions are considered amenable for sharing with other missions and thus, it is conceivable that the sensors will be assigned to other vehicles planned for that timeframe.

The early space missions, in conjunction with an active aircraft test program will help set the measurement and mission requirements for the later missions.

The evolutionary candidate missions for the Atmospheric Observation System include six specific flights. The first mission is composed of a Shuttle sortie early flight to develop sensors and obtain preliminary global atmospheric data. The second mission is a free-flying spacecraft in a low Earth orbit, and as such constitutes the first flight of the Lower Atmospheric Research Satellite (LARS). The third mission also utilizes LARS in low Earth orbit; however, there will be a rendezvous to update the sensor package with more advanced sensors. Another Shuttle sortie flight is envisioned for Mission 4. This mission will accommodate the LIDAR sensors and will provide an initial test and demonstration of capability for that advanced sensor concept. A geosynchronous orbit is assigned to Mission 5 which will utilize passive sensors for large area coverage on a global basis. Mission 6 will be in low Earth orbit and will incorporate the LIDAR sensors as well as complementary passive sensors. The sequence of the various missions suggests that the Sortie flights will be of short duration, approximately 1 week per test, and the free-flying missions will be longer than 2 years in duration particularly the last two missions, 5 and 6. These last two missions will be performed concurrently during part of the flights, that is, Mission 6 will overlap with 5 for a portion of the two missions. Although the candidate missions occur typically in a post-1990 timeframe, it is conceivable that the Shuttle sortie flights for Mission 1 and a portion of the initial LARS Missions will be performed in the decade of the 1980's. A hypothetical schedule has been postulated for these missions, solely to enable the technology assessment; this is presented in Figure 4-1.

Table 4-1 summarizes the mission characteristics, which will be discussed in the paragraphs that follow.

4.1 SHUTTLE SORTIE SENSOR DEVELOPMENT TESTS

Many questions remained to be answered concerning the observation of air quality and the troposphere from orbital altitudes. Some of these questions relate to the effects of variable atmospheric conditions, various ground reflectance conditions, as well as the interference of the measured species with other gases in the upper atmosphere. This first mission will be designed to answer some of the more pressing questions for subsequent implementation of

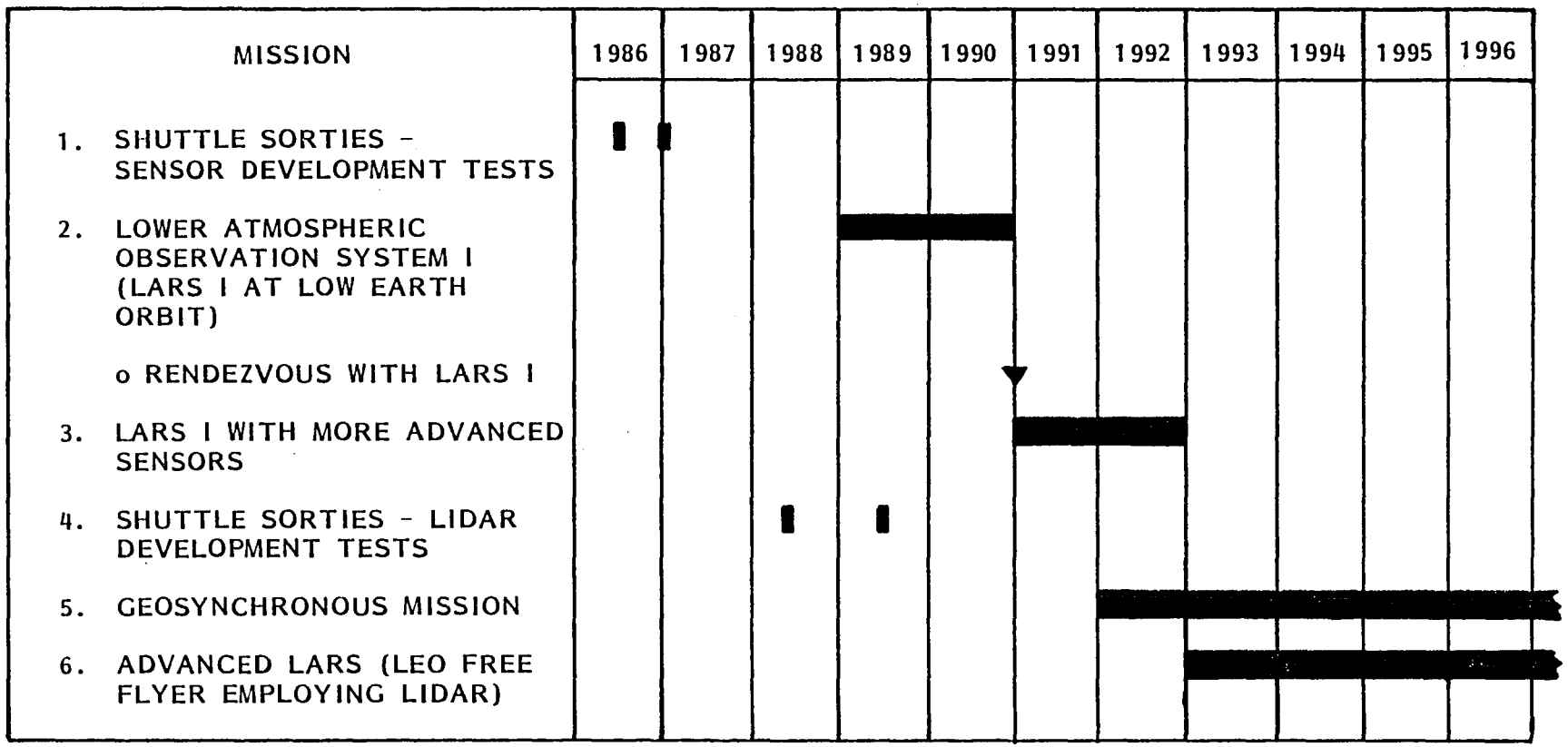

FIGURE 4-1. AOS MISSIONS - STRAWMAN SCHEDULE

TABLE 4-1. MISSION AND PAYLOAD CHARACTERISTICS

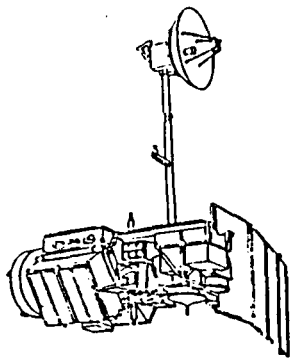

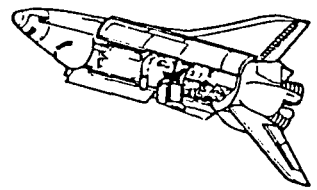

AOS MISSION	SCIENTIFIC INSTRUMENTS	P/L WEIGHT (KG)	P/L AREA (M^2)	ORBIT ALT./INCL. (KM) (DEG)	P/L POWER (KW)
1. SHUTTLE SORTIE SENSOR TESTS	GAS FILTER RADIOMETER, INTERFEROMETER, TEMPERATURE SOUNDER	355	2.8	280/90°	0.3
2. LARS I	SAME AS 1, PLUS: PHOTOPOLARIMETER, PART. SCAN INTERFEROMETER, SCANNING SPECTRORADIOMETER	492	3.7	750/98.4°	0.6
3. LARS I' (SENSOR UPDATE)	SILILAR TO 2, PLUS: MLA, SUB-MM WARE RADIOMETER, LASER HETERODYNE SPECTROMETER (LHS)	870	4.1	780/98.5°	1.7
4. SHUTTLE SORTIES - LIDAR	LIDAR, INTERFEROMETER, TEMPERATURE SOUNDER, MLA	1905	10.6	280/96.6°	5.3
5. GEOSYNCHRONOUS MISSION	GAS FILTER RADIOMETER/DETECTOR MOSAIC, PHOTOPOLARIMETER, MLA, INTERFEROMETER, LHS	890	5.7	36127/0°	1.1
6. ADVANCED LARS (II)	LIDAR, TEMP. SOUNDER, MLA, SUB-MM WAVE RADIOMETER	3130	16.6	520	17.7

a more comprehensive orbital program. The sensors that will be selected will be fairly mature and probably will include such sensors as the Gas Filter Correlation Radiometer in a version of the MAPS Sensor. A survey sensor such as the Interferometric Spectrometer would be particularly useful in this mission since it will provide a complete survey of the spectral region from the near IR to the thermal IR. In addition, an atmospheric temperature sounder would be useful for correlation with the data obtained from the other two sensors, to obtain concentration profile measurements. Table 4.1-1 shows the Mission 1 measurements including the type of coverage and the type of resolution that is required from the data. This is a fairly modest payload which could be accommodated in any one of a number of flights in the Shuttle Program in the post-1985 era. In order to take advantage of the opportunities presented by the Shuttle for such testing, it would be important to recognize the preliminary steps that should be taken in terms of modeling and sensor refurbishment in the early '80's.

The orbital parameters selected for Mission 1 are compatible with the Shuttle Orbiter and provide ample opportunity for the package to be accommodated in any of a number of flights in the Shuttle. The altitude is nominally 280 Km. At this altitude we will have a one-day repeating orbit that provides multiple passes over selected targets and truth sites. The inclination is nominally 90° or near polar to provide full Earth coverage. Although a high inclination orbital will be desirable, this requirement could be somewhat flexible, for instance, a Sun-synchronous or near Sun-synchronous orbit would be satisfactory. A node time of 9:00 a.m. would be desirable to correspond with a mid-morning coverage.

The duty cycle of the sensors need not be non-continuous, for instance, the interferometric spectrometer could operate at 25% duty cycle and the gas filter radiometer at 50% duty cycle, to correspond with specifically chosen "clean" and "anthropogenic" areas in various continents and oceans. The temperature sounder would be needed to operate at all times when either of the instruments are on, and it may be desirable to maintain this instrument operating throughout the entire flight. The data volume will be approximately 2.2×10^{11} bits per day. The data storage will be 4.4×10^{7} bits per day for all three sensors. In this operational scenario the data will be transmitted in real-time through the TDRS.

TABLE 4.1-1. MISSION 1 - SHUTTLE SORTIE

THIS MISSION TESTS THE SENSORS IN THE PHYSICAL AND OPERATIONAL ENVIRONMENT OF SPACE. IN ADDITION, WILL GATHER DATA ON C,N,O SYSTEM ON A GLOBAL SCALE. REPEAT FLIGHTS ARE DESIRABLE.

SENSORS	MEASUREMENT*	TYPE OF COVERAGE	HORIZONTAL RESOLUTION (KM)
INTERFEROMETRIC SPECTROMETER	O_3	TEST SITES - DAILY	100
	CO	" "	1000
	H_2O	" "	200
	CH_4	" "	1000
GAS FILTER CORRELATION RADIOMETER	NH_3	CLEAN REGIONS, CLOUDS, - AS AVAILABLE	200
TEMPERATURE SOUNDER	T. PROFILE	TEST SITES - DAILY	100

NOTE: ENTRIES SHOWING SPECIES SIGNIFY CONCENTRATION PROFILE OF THE DESIGNATED GAS.

4.2 INITIAL LOWER ATMOSPHERIC RESEARCH MISSION

The first flight of the Lower Atmospheric Research Satellite will be designed to test some of the sensors that were flown in the previous mission, and in addition, will incorporate other sensors for additional species concentration measurements and aerosol measurements. The mission will be of a longer duration (minimum of 2 years lifetime) since it will be performed in a free-flyer satellite, and thus will enable a more comprehensive scientific investigation as compared with the more engineering oriented measurements of Mission 1. Table 4.2-1 identifies the sensors, their measurements, and the type of coverage that will be obtained with each one of the sensors. Added to the sensor complement of Mission 1 will be the partial scan interferometer, the photopolarimeter and the scanning spectroradiometer. The figure also shows the sensor characteristics and the support requirement for the equipment. Notice that although the weight of the payload is not much larger than that on Mission 1, the arrangement and packaging of the sensors will be significantly different. The attitude control stability imposed by the payload is 0.8^{o} which is well within the capability of current satellite systems; this requirement is dictated by the geographic registration requirements of the sensors.

It is desirable to obtain complete global coverage, therefore, the orbit was selected as a weekly-repeating orbit that provides closure for a 400 km swath width, at 750 km circular orbit. The orbiter is significantly higher than the Mission 1 orbit to reduce atmospheric drag during the longer orbital period. A Sun-synchronous orbit with inclination at 98.4^{o} has been selected to minimize Sun angle variations while providing full Earth coverage. Transfer from the low Shuttle orbit from the 750 km orbit may require an orbital transfer module. For orbit maintenance the velocity makeup will require approximately 20 ft. per second per year.

The duty cycle envisioned for this mission is continuous for all sensors except the partial scan interferometer and the photopolarimeter. The reason for this is that these two sensors will be dedicated to specific constituents and aerosols which are to be measured in specific areas during the orbit. A 10% duty cycle is estimated for the partial scan interferometer and the photopolarimeter for this mission.

TABLE 4.2-1. MISSION 2 - INITIAL LARS

FIRST LARS SCIENTIFIC SENSOR COMPLEMENT, WILL ADD AEROSOL MEASURING CAPABILITY, PLUS A DEDICATED SPECIES MEASURING INSTRUMENT AND SURFACE MEASUREMENT CAPABILITY.

SENSORS	MEASUREMENTS	TYPE OF COVERAGE	HORIZONTAL RESOLUTION (KM)
INTERFEROMETRIC SPECTROMETER	O_3	GLOBAL - WEEKLY	100
	CO	GLOBAL - WEEKLY	1000
	H_2O	GLOBAL - WEEKLY	200
	H_2S	GLOBAL, URBAN AREAS - WEEKLY	200
	CH_4	GLOBAL - WEEKLY	1000
GAS FILTER CORRELATION RADIOMETER	NO_2	GLOBAL - WEEKLY	200
	SO_2	URBAN AREAS -DAILY	200
	NH_3	CLEAR REGIONS, CLOUDS - DAILY	200
PARTIAL-SCAN INTERFEROMETER	HNO_3	ANTHROPOGENIC AREAS - DAILY	200
PHOTOPOLARIMETER	AEROSOL BURDEN	AEROSOL BURDEN - DAILY	100
TEMPERATURE SOUNDER	TEMP. PROFILE	GLOBAL - WEEKLY	100
SCANNING SPECTRORADIOMETER	SURF. TEMP.	GLOBAL - WEEKLY	100

The volume of data accumulated during this mission will be approximately 8.6×10^{11} bits per day and the on-board data storage for buffering purposes will be approximately 10 gigabits. Data transmission can be accomplished through the TDRS during three minutes and 15 seconds at 50 megabits per second.

4.3 RENDEZVOUS WITH LOWER ATMOSPHERIC RESEARCH SATELLITE

This mission constitutes a continuation of the previous flight, but with more advanced sensors which are possible due to the additional time for development as well as the valuable data from Missions 1 and 2. In the mission scenario, the lower atmospheric research satellite will undergo a coplanar transfer to a lower altitude to permit the Shuttle to capture it for the purpose of replacing the experiment module with a more advanced set of sensors. As shown in Table 4.3-1, the sensors will be upgraded versions of the ones from the LARS first flight, plus the laser heterodyne spectrometer and a sub-millimeter wave radiometer. The latter is included solely to investigate the applicability of this instrument in the upper troposhpere. The inferometric spectrometer is a surveying instrument and thus it is debatable whether it should be included since it is not dedicated to specific trace species. An alternative to the survey spectrometer will be the partial scan interferometer which is a dedicated instrument. We have shown the interferometric spectrometer in this mission and subsequent missions since it imposes the most stringent requirements on the system in terms of volume, weight and data rate.

The sensor characteristics for Mission 3 show that the weight has increased significantly over the previous missions, and that the power is over 1 Kw which will require a larger solar array on the LARS.

The orbital parameters are similar to those in Mission 2, requiring 780 Km circular orbit for a three day repeating orbit. Whereas the Mission 2 was a weekly repeating orbit, this 780 Km orbit is the closest three day repeater that can be obtained. Thus, the orbit is slow enough for efficient transfer from the Space Shuttle and including a minor plane change of 0.1°. A node time of 9:00 a.m. is retained for this mission to provide mid-morning and mid-evening coverage. Orbit maintenance associated with this vehicle will be approximately the same as that of Mission 2.

TABLE 4.3-1. MISSION 3 - UPDATED LARS

MEASUREMENTS WITH HIGHER ACCURACY AND MORE FREQUENT SAMPLING AS COMPARED TO MISSION 2. UTILIZES MORE SENSITIVE (COOLED) INSTRUMENTS. REQUIRES RENDEZVOUS WITH SHUTTLE AND A CHANGE IN ORBIT.

SENSORS	MEASUREMENTS	TYPE OF COVERAGE	HORIZONTAL RESOLUTION (KM.)
INTERFEROMETRIC SPECTROMETER	O_3	GLOBAL - TWICE/3 DAYS	200
	CO	GLOBAL - TWICE/3 DAYS	500
	H_2O	GLOBAL - TWICE/3 DAYS	200
	H_2S	URBAN AREAS - TWICE/3 DAYS	200
	CH_4	GLOBAL - TWICE/WEEK	1000
GAS FILTER CORRELATION RAD. (PUSH-BROOM INSTRUMENT)	NO_2	GLOBAL - TWICE/3 DAYS	200
	SO_2	GLOBAL - WEEKLY	200
	NH_3	CLEAR REGIONS - DAILY	500
PARTIAL SCAN INTERFEROMETER	HO_2	CLEAR, ISOLATED REGIONS	100
	HNO_3	ANTHROPOGENIC SOURCES - DAILY	100
PHOTOPOLARIMETER (LINEAR ARRAY)	AEROSOL BURDEN	CLEAN REGIONS - DAILY	100
TEMPERATURE SOUNDER	TEMP. PROFILE	GLOBAL - TWICE/3 DAYS	100
MULTISPECTRAL LINEAR ARRAY	SURF. TEMP, CLOUDS	GLOBAL - TWICE/3 DAYS	100
LASER HETERODYNE SPECTROMETER	O_3	GLOBAL - TWICE/3 DAYS	100
SUB-MM. WAVE RADIOMETER	NO	CLEAR REGIONS, ANTHRO. AREAS - DAILY	100
	OH	CLEAR ISOLATED REGIONS - WEEKLY	200
	H_2SO_4	CLEAR REGIONS - DAILY	100

The duty cycle for the sensors will be similar to that in Mission 2, namely continuous except for the partial scan interferometer, the photopolarimeter and the submillimeter wave radiometer. The latter is a sensor that probably will be only useful in the upper troposphere; the submillimeter radiometer has a 60% duty cycle corresponding to clean and anthropogenically active areas.

4.4 SHUTTLE SORTIES - LIDAR

The main objective of this mission is to test and demonstrate the LIDAR sensor for measurement of species concentration, aerosol and wind vectors. The LIDAR sensor will contain a telescope in the 1 meter diameter category similar to that proposed for the Windsat Satellite and the Multi-User LIDAR System. The latter is defined in a study performed by General Electric for NASA Langley Research Center. Inclusion of other sensors such as the interferometer spectrometer, temperature sounder, and multi-spectral linear array will permit the acquisition of valuable scientific data correlated with temperature profiles, detailed spectral absorption data, and surface temperature data. (See Table 4.4-1.)

The sensor package is primarily influenced by the LIDAR sensor, as expected. Both the wind and species concentration measurements will be accommodated on the same telescope so that several modes of operation will be performed using different lasers, depending on the spectral region and the sensing mode that is necessary.

Perhaps the most significant support requirement is the 5.4 Kw power necessary for the sensor package. This level is somewhat higher than the current capability of Spacelab in its nominal configuration, but can be attained by adding a supplementary power kit for the payload.

An orbit of 280 Km altitude and 96.6^{o} inclination, Sun-synchronous, has been selected for this flight. At this altitude, it will be possible to have a daily repeat cycle that provides multiple passes over selective targets which provide ground truth information or subsequent data reduction.

The duty cycle of this mission will be normally continuous throughout the flight to obtain the greatest possible variety of environmental and ground conditions. Should the power requirements be limiting in this mission, it

TABLE 4.4-1. MISSION 4 - LIDAR TEST ON SHUTTLE

IN ADDITION TO LIDAR DEVELOPMENT FOR THE MEASUREMENT OF SPECIES, AEROSOL AND WIND MEASUREMENTS, THE MISSION WILL PERMIT CORRELATION OF DATA WITH INDEPENDENTLY OBTAINED TEMPERATURE PROFILES, GROUND AND METEOROLOGICAL DATA, AND FULL SPECTRUM FROM 8-14 MICRONS.

SENSORS	MEASUREMENTS	TYPE OF COVERAGE	HORIZONTAL RESOLUTION (KM)
LIDAR	O_3	TEST SITES - DAILY	300
	H_2O	TEST SITES - DAILY	300
	NO_2	TEST SITES - DAILY	300
	CO	TEST SITES - DAILY	300
	AEROSOL DENSITY	TEST SITES - DAILY	300
	WIND VECTORS	TEST SITES - DAILY	300
INTERFEROMETRIC SPECTROMETER	SPECTRUM 8-14 MICRONS	TEST SITES - DAILY	300
TEMPERATURE SOUNDER	TEMP. PROFILE	GLOBAL - WEEKLY	100
MULTISPECTRAL LINEAR ARRAY	SURFACE TEMP.	GLOBAL - WEEKLY	100

will be feasible to schedule a lower duty cycle for the LIDAR sensor, to correspond with specific targets and general (clean and anthropogenic) areas.

The data volume for this mission is approximately 16 x 10^9 bits per day, obtainable with some data compression requiring the elimination of unncessary data from the interferometric spectrometer data train. Data storage capability onboard will be approximately 10^{10} bits.

Concerning the requirements on the space transportation system, this payload will be compatible with a pallet accommodation mode. A spacelab auxiliary power unit will be desirable for this payload. Also, it would be desirable to extend the period of flight from one to two weeks if the Shuttle scheduling will permit it, to provide more global data during each flight.

4.5 GEOSYNCHRONOUS MISSION

In the progression of missions that is being presented herein, there is a threshold of developmental capability after which the flights, rather than being at least partially developmental, become fully scientific investigations directed towards global surveys in full capability. Mission 5 is an advanced mission which will benefit from the sensor and technique development in the previous missions. It would be conducted with the full complementary operation of many ground and airborne sensors which, concurrent with the space based measurements will yield the scientific data necessary to answer the knowledge requirements. The principal feature of this mission, of course, is the geosynchronous orbit which permits the frequent observation of global atmospheric phenomena over long periods of time. The sensors for this mission are as shown in Table 4.5-1, and include the geosynchronous gas filter radiometer, the photopolarimeter, multi-spectral linear array, interferometric spectrometer and laser heterodyne spectrometer. One of the principal features of these sensors for the geosynchronous mission is that they will be coupled with multiple detector elements in order to permit larger coverage of the Earth's surface and take advantage of the long periods of observation. Typically, we would like to examine the coupling of the geosynchronous gas filter radiometer with a multi-spectral mosaic or two-dimensional array. Figure 4.5-1 depicts the instrument optical path. Shown here are three separate two/dimensional arrays at the focal plane of three light paths resulting from two beam splitters. Each two dimensional array senses the incident radiation after passing through the appropriate gas filter. In some

TABLE 4.5-1. MISSION 5 - GEOSYNCHRONOUS AOS

THIS MISSION WILL PERMIT GLOBAL OBSERVATION OF DYNAMIC ATMOSPHERIC PHENOMENA WITH INCREASED SAMPLING FREQUENCY AND INTEGRATION TIME.

SENSORS	MEASUREMENTS	TYPE OF COVERAGE	HORIZONTAL RESOLUTION (KM)
GEOSYNCHRONOUS GAS FILTER RAD.	SO_2	CLEAR REGIONS, ANTHRO. AREAS - 2/DAY	500
	NO_2	GLOBAL - DAILY	200
	NH_3	CLEAR REGIONS - 2/DAY	200
PHOTOPOLARIMETER	AEROSOL BURDEN	GLOBAL - 2/DAY	200
MULTISPECTRAL LINEAR ARRAY	SURFACE TEMP.	GLOBAL - DAILY	100
	CLOUDS, FRONTS	GLOBAL - 2/DAY	100
INTERFEROMETRIC SPECTROMETER (MULTI-DETECTOR ARRAY)	O_3	GLOBAL - 2/DAY	100
	CO	GLOBAL - 2/DAY	1000
	H_2O	CLEAN REGIONS, CLOUDS - 2/DAY	200
	H_2S	CLEAN REGIONS - 1/HOUR	500
	CH_4	GLOBAL - DAILY	1000
LASER HETERODYNE SPECTROMETER (MULTI-DETECTOR ARRAY)	O_3	GLOBAL - DAILY	100

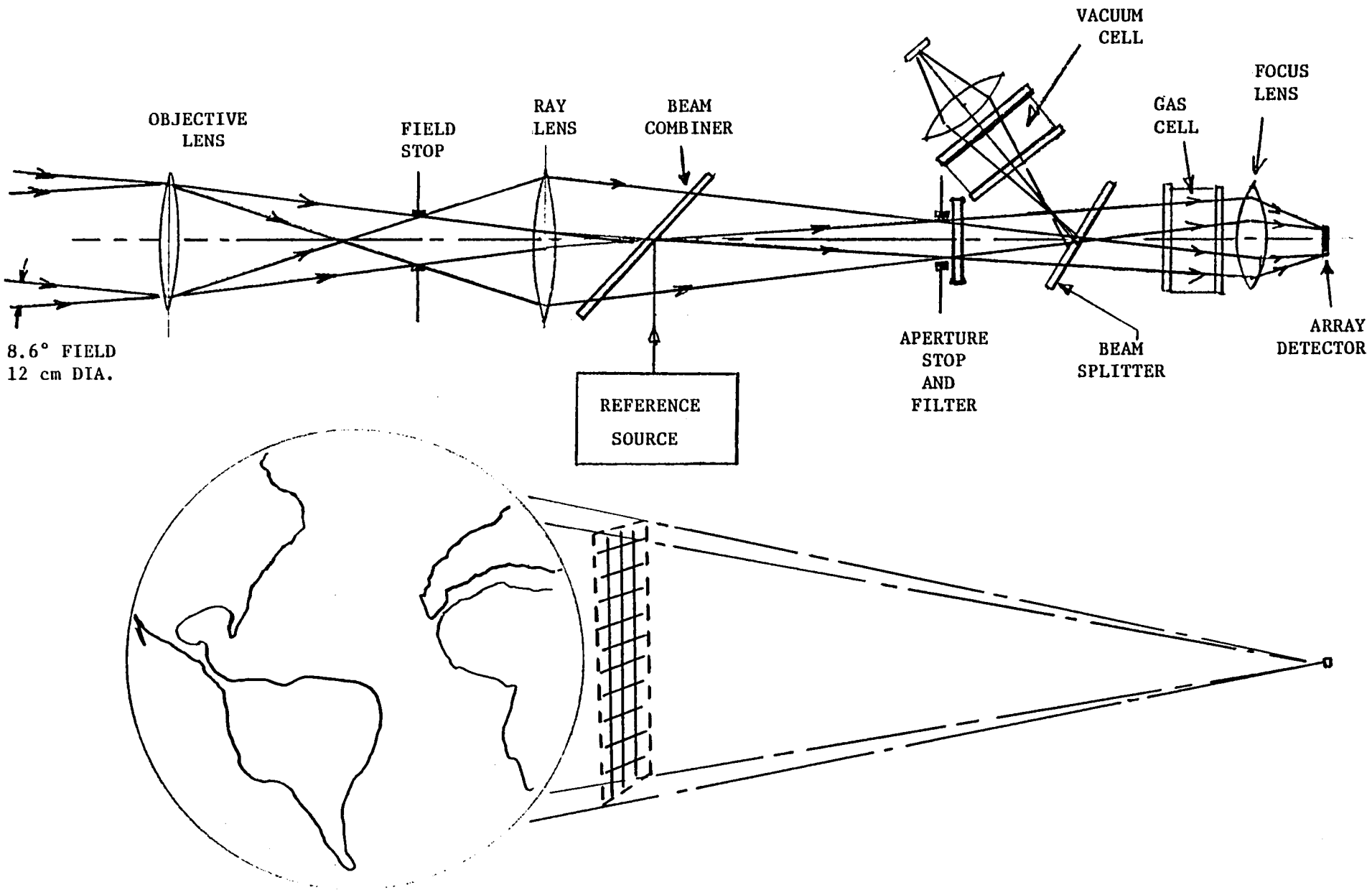

FIGURE 4.5-1. GGFR SENSOR SCHEMATIC

applications, the instrument may incorporate interchangeable filters which may contain different gases at various pressures. These filters will be alternately interposed in the light path in order to permit measurements of different species during the observation periods from the high altitude. On the bottom of the figure we see a grid of 30 x 30 resolution element which can be resolved by the individual two-dimensional arrays. Each one of the elements in this grid will have a dimension of 200 x 200 Km. Since the satellite is in geostationary orbit with a small amount of drift to permit full Earth coverage, the sensor will use the "stare" mode for a segment of the globe, and after a suitable longitudinal drift the stare will be drifted to another section of the globe. One of the problems that must be addressed in the development of such a sensor would be the consideration of the effect of cloud cover on measurements involving such large resolution elements. There will be a degree of obscuration by certain thicknesses of clouds, which must be considered in the data reduction. There are two complementary approaches that can be examined in order to circumvent this cloud cover problem. One of them will be to make the resolution of the two dimensional arrays considerably finer, for instance 10 Km instead of 200 Km, however, the effect on the sensitivity of each detector element must be considered in light of the decreased instantaneous field-of-view that will be introduced through that procedure. The other approach would be to sample the cloud cover through other instruments such as the multi-spectral linear array that serves as a spectral radiometer, and detect the threshold of cloud area and cloud thickness that would render any one of the 900 resolution elements useless during any period of observation. Some of the development required for the establishment of a cloud threshold for gas filter correlation detectivity can be established during the early flights such as Mission 3 when the spectroradiometer will be monitoring cloud cover.

The sensor characteristics show that the package is smaller than the Flight 4 package and the power will be proportionally smaller. The attitude control stability of $.016^{o}$ is much more stringent than any other previous missions due to the smaller angular field-of-view for each pixel.

The orbit selected for this mission is a near geosynchronous orbit at 36,127 Km and introducing a 4° per day drift. This drift will permit 360° coverage once each season. Notice that the orbiter is above the geostationary

orbit, which will be desireable from the point-of-view of avoiding the eclipsing of Comsats. Consideration was given to introduction of some inclination other than equatorial, however, we have retained the 0° inclination as nominal. Orbit maintenance for this mission is very nominal, at 175 ft. per second per year.

In the scenario envisioned for this mission, the gas filter radiometer will remain fixed upon one segment of the Earth during a period not exceeding 6 hours, at which time it will shift to another segment and remain for a similar period and so on during a 24-hour period. All other sensors will be ON continuously and will scan segments of the Earth to correspond to those monitored by the gas filter radiometer. The data volume for this mission is estimated at 16.8 gigabits per day, attainable with some data compression. Data storage is 10^{10} bits.

4.6 ADVANCED LOWER ATMOSPHERIC RESEARCH SATELLITE MISSION

This mission will contain both passive and active sensors and therefore will be a large payload including the LIDAR sensors, temperature sounder, multi-spectral linear array, and submillimeter radiometer as shown in Table 4.6-1. The LIDAR sensor will address most of the gaseous species, aerosols and wind vectors measurements. A separate sensor is required for high sensitivity measurement of species that cannot be addressed by the LIDAR sensor. A typical choice here will be the submillimeter wave radiometer, but we recognize the limitations inherent in such a sensor which may only be able to sense the upper troposphere. Feature tradeoffs will determine whether it will be more desireable to accompany the LIDAR sensor with an advanced version of the laser heterodyne radiometer or an interferometer.

The Mission 6 orbit requires a 520 km altitude at a Sun-synchronous orbit of 97.5^{o}. This orbit was selected for the weekly repeating orbit that provides full coverage closure for 400 km swath widths; also, the relatively low orbit lowers the power demand for lasers. The Sun-synchronous orbit is designed to minimize Sun angle variations for passive sensors are providing full Earth coverage. The node time as before is selected at 9:00 a.m.

The sensor package characteristics show a weight of 3130 Km and a power of 17.7 Kw. This is based on the incorporation of two independent 1.25 diameter

TABLE 4.6-1. MISSION 6 - ACTIVE/PASSIVE SENSING FREE-FLYER

MISSION WILL COMBINE THE BEST FEATURES OF ACTIVE AND PASSIVE SENSING TECHNIQUES, AND WILL COMPLEMENT THE GEOSYNCHRONOUS OBSERVATIONS OF MISSION 5 WITH HIGH VERTICAL RESOLUTION DATA.

SENSORS	MEASUREMENTS	TYPE OF COVERAGE	HORIZONTAL RESOLUTION (KM)
LIDAR	O_3	GLOBAL - WEEKLY	100
	H_2O	GLOBAL - WEEKLY	100
	HNO_3	ANTHRO. AREAS - DAILY	200
	NH_3	CLEAR REGIONS - DAILY	500
	CO	GLOBAL - WEEKLY	500
	NO_2	GLOBAL - WEEKLY	100
	SO_2	GLOBAL - WEEKLY	200
	AEROSOL CONCENTRATION	CLEAR REGIONS, CLOUDS - DAILY	100
	WIND VECTORS	GLOBAL - DAILY	200
TEMPERATURE SOUNDER	TEMP. PROFILE	GLOBAL - WEEKLY	100
MULTISPECTRAL LINEAR ARRAY	SURFACE TEMP.	GLOBAL - WEEKLY	100
	CLOUDS, FRONTS	GLOBAL - DAILY	200
SUB-MM WAVE RADIOMETER	H_2SO_4	CLEAR REGIONS - DAILY	100
	NO	CLEAR REGIONS, ANTHRO. - DAILY	100
	OH	CLEAR ISOLATED AREAS - WEEKLY	200

aperture telescope systems for the gas species, aerosols, and wind measurements. During the study we investigated the possibility of reducing the payloads' size by using a common telescope system for the LIDAR, however, this would require certain compromises relative to the desired wind measurement coverage versus species concentration and aerosol measurement coverage, all of which are different for different regions. The high power is required primarily by the lasers, assuming that the lasers will be time-shared between the two telescopes, and that a realistic energy level per pulse of 10 joules can be used for the detection of the measure trace species. Table 4.6-2 shows some of the LIDAR power parameters that are applicable to this sensor. For instance, the spatial resolution follows a square function, so that a 100 Km resolution requires nine times the power of a 300 Km resolution cell. The accuracy requirements in the wind measurements are translated into a linear increase in power, for instance, a 5 meter per second uncertainty would mean a 50% decrease in power from that required by a 10 meter per second uncertainty. The aerosol height has an exponential relationship with respect to the power, so that at 15 Km we would need 178 times the power at sea-level. These relationships suggest that a set of tradeoffs should be made with respect to the selected parameters to obtain the best resolution and sensitivity with the least amount of system power.

The duty cycle for all sensors on this mission is continuous for all sensors except for the wind LIDAR. The wind LIDAR which occupies one of the two 1.25 meter aperture telescopes operates in two different modes: the wind measuring mode, and the species concentration measuring mode. The lasers is in this telescope are time shared, but the species mode is only operated during periods when the spacecraft is traveling through specific pre-selected clear areas or anthropogenically active regions.

The data volume will be 8.3×10^9 bits per day and the data storage will be 10^{10} bits per day. At this data rate, the data transmission through the TDRS can be limited to 5 minutes per day at approximately 28 megabits per second.

Mission Definition Summary

This section described six hypothetical missions for tropospheric research which would encompass Shuttle sorties, low Earth orbit free-flying mission and

TABLE 4.6-2. LIDAR DIAL POWER PARAMETERS

WIND-LIDAR CONCEPT*

LASER TRANSMITTER 10J x 8 Hz = 80W @ 7.4% n 300 km RESOLUTION CELL - 40 SHOTS PER CELL ALTITUDE 300 km, RANGE 704 km
WIND SPEED: 1-100 m/s, PRECISION ± 1 m/s
VERTICAL RESOLUTION: 1 km

SCALING PARAMETERS

ITEM	SCALING LAW	POWER RATIO
RESOLUTION CELL	SQUARE	100 km = 9 TIMES 300 km
WIND UNCERTAINTY	LINEAR	50 m/s = 1/2 OF 100 m/s
SPECIE DETECTION	--	SPECIE = 2 1/2 TO 10 TIMES WIND SPEED
AEROSOL HEIGHT	EXPONENTIAL	20 km = 1000 TIMES SEA LEVEL 15 km = 178 TIMES SEA LEVEL 10 km = 32 TIMES SEA LEVEL
AEROSOL CONCENTRATION	LINEAR	MAX = .3 TIMES NOMINAL MIN = 1.5 TIMES NOMINAL
RANGE	SQUARE	940 km = 1.8 x 704 km (7 DAY REPEAT)
VERTICAL RESOLUTION	LINEAR	2 km RES = 1/2 OF 1 km RES.

*Based on Windsat Study by Lockheed.

one geosynchronous mission. The missions synthesized in this Study task were solely for the prupose of examining the potential technology needs associated with projected future tropospheric research. The sensor complements for those missions is very flexible and based on early forecasts and program assumptions. Aircraft and ground-based research will provide most of the information needed to select the actual missions and their optimized sensor complements.

The development of a capability in space-based tropospheric research is envisioned as an evolutionary process, commencing with early developmental testing of sensors and culminating in advanced missions such as Mission 5 and 6. The latter were selected for subsequent conceptual design and spacecraft end-to-end data systems design analysis, due to the technological challenge of these missions.

SECTION 5

SYSTEM DESIGN CONCEPTS

SECTION 5
SYSTEM DESIGN CONCEPTS

The objective of this task is to generate system design concepts for the spacecraft and the end-to-end data system that will accommodate the selected missions. The analysis focused on some of the more important aspects which have a potential bearing on the technology requirements. Two of these aspects are the payload package or the group of sensors that constitute the payload, and the end-to-end data system. The NASA-LARC in-house design analysis, which addressed spacecraft design highlights and sizing of major supporting subsystems is included in Appendix B.

Some assumptions were made in these analyses. The systems for Missions 5 and 6 were selected as the system concepts to be examined in Task 3. These missions were sufficiently advanced that they presented a technological challenge and variety of sensors. Mission 5 which flies at a geosynchronous orbit will overlap in its timeframe with Mission 6, which is the advanced LARS containing the two LIDAR telescope systems. This concurrent operation will be important in discussions of the command and data management requirements and the end-to-end systems to accommodate them. Some of the assumptions used in the spacecraft design analysis are discussed below.

It is assumed that complete spacecraft will be dedicated to each of the two missions, 5 and 6. As discussed previously, there may be other alternatives such as the accommodation of additional sensors to serve other missions, but the concepts and analyses discussed here do not include such alternatives. Another assumption is the use of the present spacecraft transportation system configuration including the Shuttle Orbiter cargo bay capability of 4.6 x 18 meters cargo volume. The system is assumed to be in operation in the proposed early 1990's timeframe, and designed for scientific investigations, but also including limited operational capability for collecting data on a routine basis for specific uses in air quality and meteorology.

In order to determine the characteristics of the spacecraft that will be required to accommodate these payloads, the GE study team supported the Langley Research Center personnel in constructing a model of a spacecraft to accommodate the mission. The "IDEAS" (Interactive Design and Evaluation of Advanced Spacecraft) computer aided design and analysis program was utilized

by the NASA-Langley personnel to construct this model; Appendix B includes printouts that resulted from this effort and a description of the interactive computer programer and the associated input values and assumptions.

5.1 MISSION 5 SYSTEM

The payload complement physical characteristics and support requirements are shown on Table 5.1-1. Figure 5.1-1 shows the sensor envelope dimensions as mounted on a spacecraft platform. Due to the narrow fields-of-view the sensors can be accommodated fairly close to each other without interference in the fields-of-view. The overall dimensions of the Mission 5 payload package are approximately 3 x 1.3 x 2 meters. This type of payload can be easily accommodated in a Shuttle launched payload attached to an upper stage booster vehicle that can place it into geosynchronous orbit.

Table 5.1-1. Mission 5 Sensor Package

Sensor Characteristics	
Weight:	890 Kg Plus 400 Kg for Detectors and Optics Refrigerator
Mounting Area:	4.6 M^2 Plus 1.1 M^2 for Detectors and Optics Refrigerator
L.O.S. Orientation:	Nadir
Support Requirements	
Power:	1,635 Watts Plus 500 Watts for Detectors and Optics Refrigerator
Thermal Requirements:	Passive Cooling of Electronics and Structure
Attitude Control Stability:	$\pm 0.016^{o}$
Knowledge of Pointing:	Within 0.004^{o}

Figure 5.1-2 shows an isometric sketch of the spacecraft for Mission 5, from NASA-Langley Research Center.

5.2 MISSION 6 SYSTEM

The payload complement for Mission 6 is shown on Table 5.2-1. One of the ways in which the mission payload can be accommodated is to construct a satellite which occupies a large segment of the Shuttle orbiter cargo bay. In this

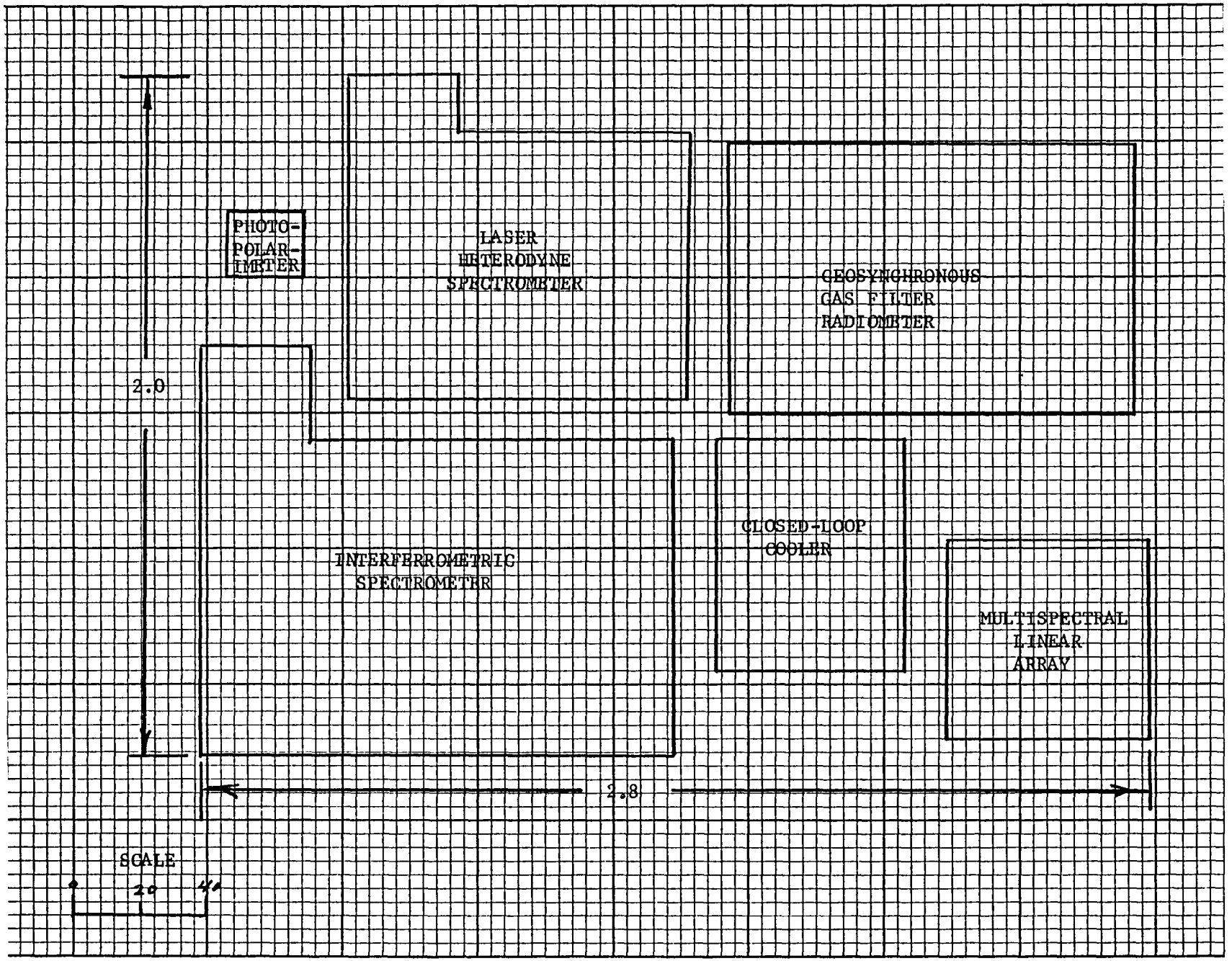

FIGURE 5.1-1a. MISSION 5 SENSOR COMPLEMENT - TOP VIEW

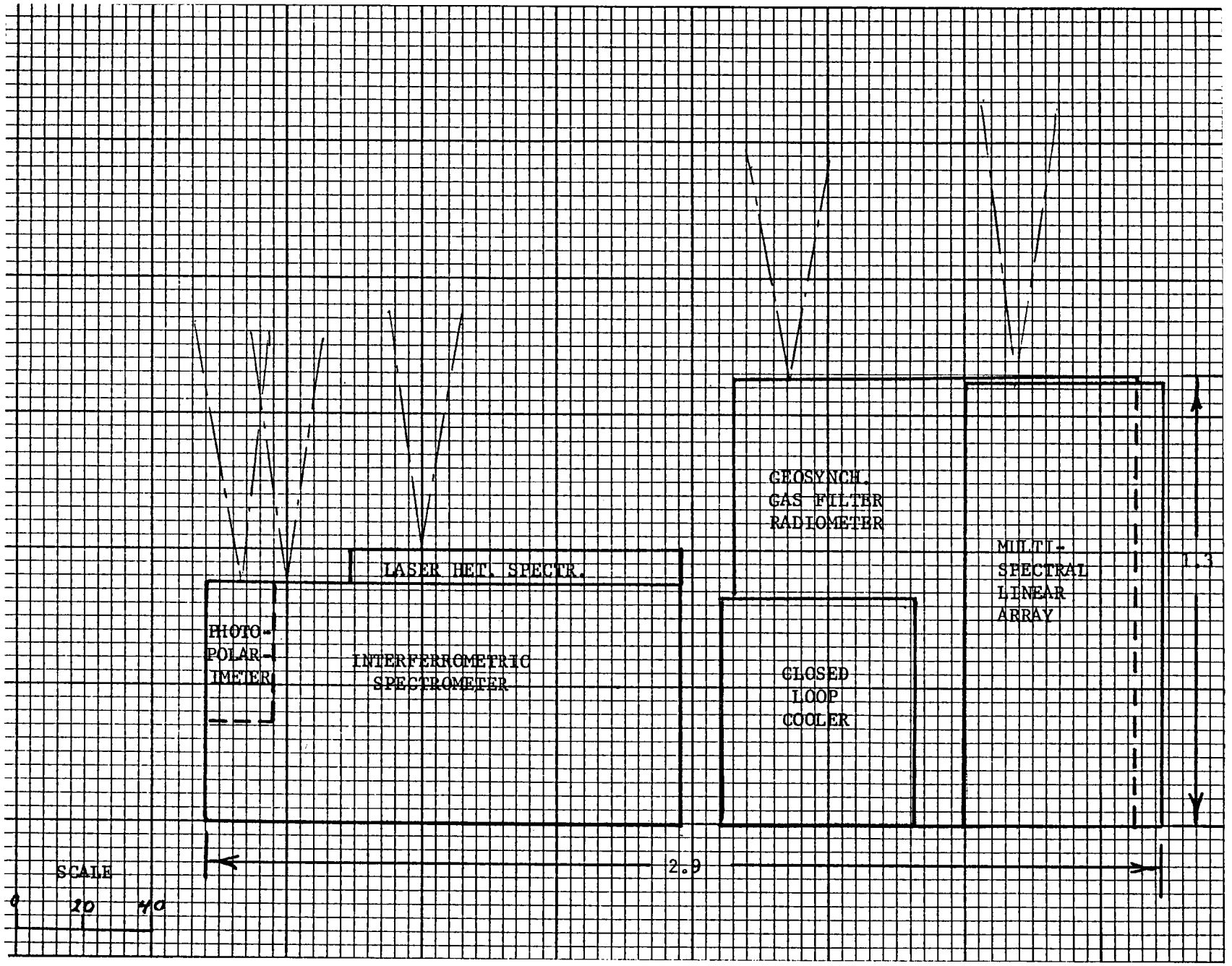

FIGURE 5.1-1b. MISSION 5 SENSOR COMPLEMENT - SIDE VIEW

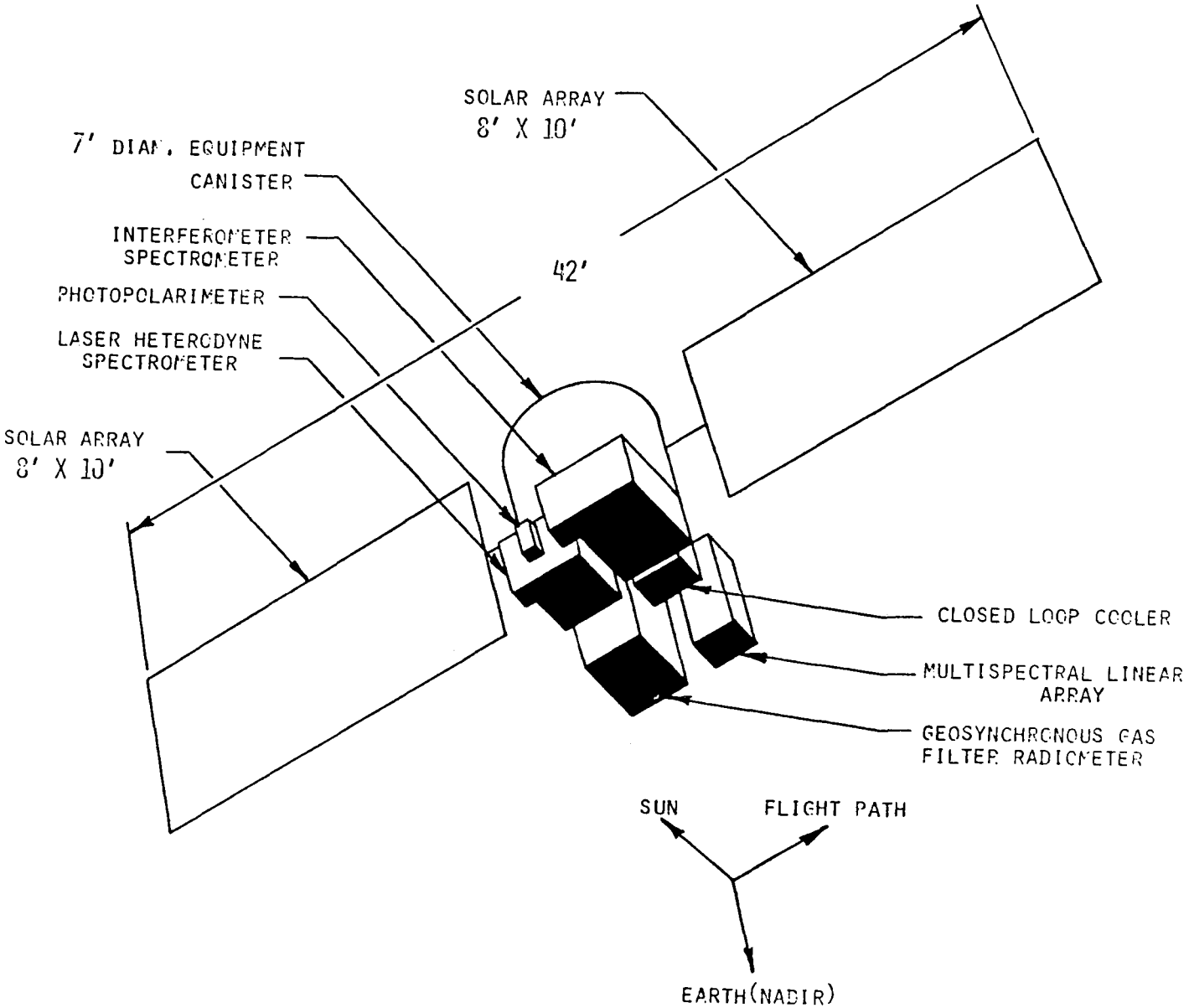

FIGURE 5.1-2. MISSION 5 SPACECRAFT-GEOSYNCH LARS II

Table 5.2-1. Mission 6 Sensor Package

Sensor Characteristics	
Weight:	3130 Kg
Mounting Area:	16.6 M^2
L.O.S. Orientation	Nadir
Support Requirements	
Power:	17.7 Kw
Thermal Requirements:	Passive Cooling of Electronics and Structures
Attitude Control Stability:	$\pm 1^{o}$
Knowledge of Pointing:	Within 0.25^{o}

configuration the lower segment of the cargo bay will contain the spacecraft subsystems and a portion of the sensors, while the upper half, which will be facing the Earth, will be left open to permit the instruments to view the atmosphere. Figure 5.2-1 shows an isometric sketch of the Mission 6 spacecraft in this configuration. Figure 5.2-2 shows an isometric sketch of a different configuration of the Mission 6 spacecraft, by NASA-Langley.

One of the main characteristics of such a payload is the relatively high power required to perform the mission. A more detailed analysis of the power requirement for this mission was performed in this task and the results are summarized on Table 5.2-2. Consideration was given to the power demand by the LIDAR systems with the attendant lasers, scan and optical drives, and focal plane coolers, as well as the passive sensors, attitude control, gimbal control systems, and Electrical Power Subsystem (based on ten percent inefficiency). Two separate configurations are shown in this table: column one, using a two-telescope payload with six separate and independent lasers,

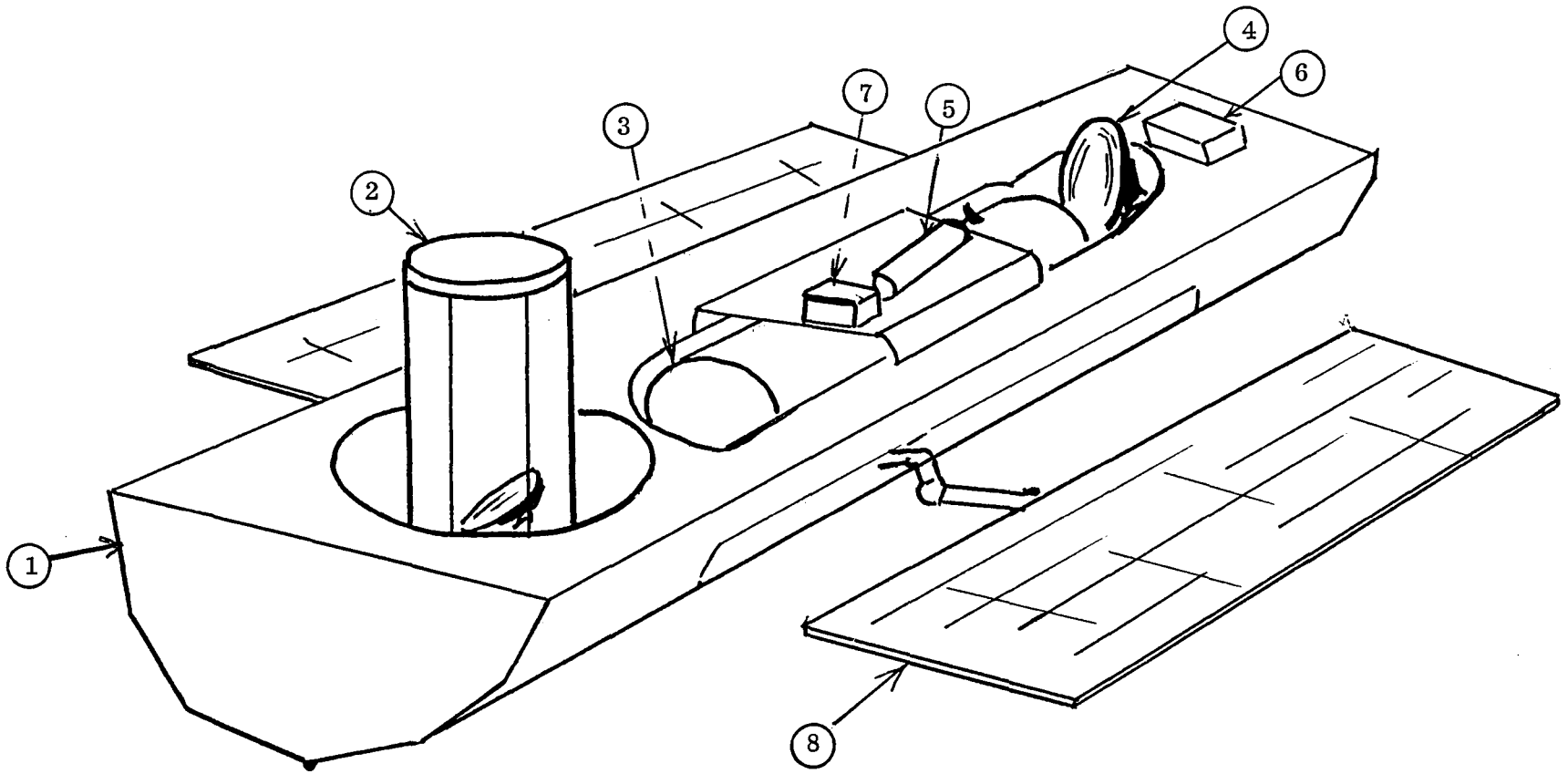

1. SPACECRAFT STRUCTURE (13.2 M LONG)
2. WIND LIDAR SENSOR (1.25 M DIAMETER)
3. MULTI-SPECIES LIDAR SENSOR (1.25 M DIAMETER)
4. LIDAR SCAN MIRROR
5. SUB-MM WAVE RADIOMETER (LIMB SENSOR)
6. SPECTRORADIOMETER (MULTISPECTRAL LINEAR ARRAY
7. TEMPERATURE SOUNDER
8. SOLAR ARRAYS (DEPLOYED)

FIGURE 5.2-1. ISOMETRIC OF MISSION 6 CONFIGURATION CONCEPT

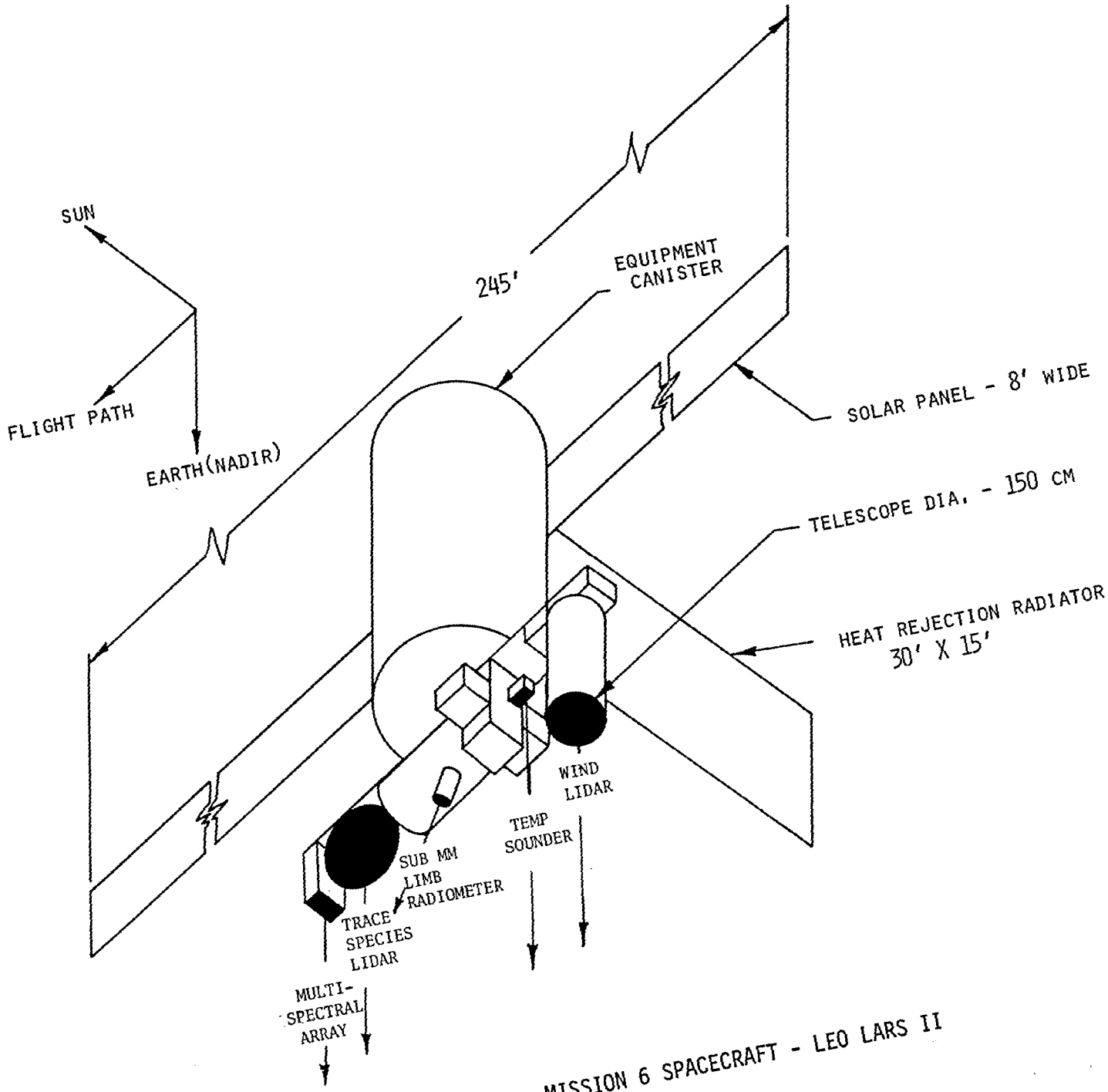

FIGURE 5.2-2. MISSION 6 SPACECRAFT - LEO LARS II

both for wind and species/aerosol measurements; and column two, a single telescope payload which would only measure the trace species and aerosol concentrations, omitting the wind measurements. The latter payload would be applicable in a situation where the Windsat would have been accommodated in a separate spacecraft and the AOS would be dedicated only to the air quality measurements. The power levels that result from the two configurations is 17.7 kw for the two-telescope system and 12.3 kw for the single telescope system. These power requirements are consistent with the capabilities envisioned for a post-1990 timeframe and could be accommodated with sizeable solar arrays.

Table 5.2-2. Power Estimate Mission 6 S/C

	Two-Telescope Payload*	One-Telescope Payload
Wind Laser System	3,000	Omitted
$CO\&CO_2$ Multi-Species Laser System	5,460	5,460
Excimer Laser System (UV)	3,000	3,000
Telescope Scan and Optical Drives	1,000	500
LIDAR Detector Focal Plane Cooler	1,800	800
C&DH and Communication	400	300
Passive Sensors (T. Sounder, MLA, Sub-MM)	400	400
Attitude Control S/S	300	300
Thermal Control (Active)	700	400
	16,060	11,160
Electrical Power S/S (10%)	1,600	1,116
Total	17,660 Watts	12,276

*Study Baseline

One of the problems that may be encountered with this type of payload is the removal of significant amounts of heat from the sensors. Several approaches have been considered including the use of heat pipes, liquid closed loop coolers, and hybrid gas and liquid cooling systems. A large radiator to dissipate the large amount of heat to cold space will be required. The radiator system will have to make provisions for the dissipation of power when the half of the vehicle facing away from Earth is in the line-of-sight of the solar flux.

Due to the size of the payload, a certain amount of on-board assembly may be required. Primarily, this would involve the readying of instruments for orbital operation by removing structural members necessary for restraining delicate optical components during the launch phase.

Another problem that was considered in the Study was the vibratory perturbation that may be introduced by the rotation of the large mirrors on the laser telescope system. Particularly disturbing are those motions where a large acceleration is encountered, such as the stopping and restarting of the scan mirrors during a typical conical or linear scan. For this purpose we have considered that in the case of the Windsat mirror and possibly in the case of the multi-species laser systems the mirrors will be rotating constantly and it would be desirable not to introduce back-and-forth motions which will cause the vibratory problems just described. The mirrors will have momentum compensation devices so that the attitude control of the system would not have to compensate for the rotation of such large masses.

The Mission 6 Spacecraft alpha-numeric and graphic outputs printout obtained through the interactive program from Langley Research Center is included in Appendix B.

5.3 END-TO-END DATA SYSTEM

This section discusses the Command and Data Handling (C&DH) aspects associated with an End-to-End Data System for AOS Missions 5 and 6. Considerations are given to both the housekeeping data and the science data from the sensors' outputs through spacecraft processing, transmission links to the ground, ground centralized processing, archival and storage, and distribution to the users. The system design is based on a set of requirements, augmented by assumptions where requirements are not yet defined, which lead to alternate

implementation schemes. These are traded off and a strawman system is developed on the basis of the tradeoff results. Several implications of the selected C&DH approach are then discussed including the technology implications and the applicability of the NASA End-to-End Data System (NEEDS) concepts.

5.3.1 ASSUMPTIONS AND REQUIREMENTS

Major system assumptions regarding user needs and technologies pertinent to the anticipated timeframe of Missions 5 and 6 are tabulated in Table 5.3.1-1. The geosynchronous satellite of Mission 5 will drift as explained in Section 4.5 to cover most of the globe. Accordingly, it cannot have a single ground station. It is assumed here that a relay satellite such as a TDRSS will be available to handle geosynchronous satellite data within the timeframe of Mission 5. Presently, TDRSS handles only low altitude orbit satellites. Timeliness of the availability of data to users is a key function in designing the system. For purposes of this design, it has been assumed that 90% of the

Table 5.3.1-1. End-to-End Data Systems Assumptions

- Relay satellite will be available to handle geosynchronous satellite (Mission 5)
- 10% of the data to the users within 4 hours
- 90% of the data to the users within 24 hours
- NEEDS technology will be available
- Data from Missions and 5 and 6 will be merged
- Integrated data products will be delivered to the users

data would be delivered to the users within 24 hours, but that 10% of the data would have to be delivered to the users within 4 hours. It is also assumed that the technologies being developed under the NEEDS Program will be available in the timeframe of these missions. The aspects of the NEEDS technologies which have direct impact on the AOS would be the Smart Sensors concept, Adaptive Information Systems, and the Modular Data Transport concepts. An assumption which leads to the major processing requirement is that the data for Missions 5 and 6 will be merged; i.e., engineering values and geophysical parameters from the two sets of sensors will be combined on a resolution element by resolution element basis.

Finally, it is assumed that the data products delivered to the users will be integrated products totally processed. This assumption is based on the fact that the system will be operational by the timeframe of Missions 5 and 6 and algorithms will have been well defined so that only a small quantity of the data would be used for experimental purposes and further algorithm developments. Integrated data products are assumed to be Level III as defined in Table 5.3.1-2.

The basic definitions of these levels of processing are that Level I is basically data converted to Engineering Units. Level II is the data converted to geophysical parameters such as wind direction and wind velocity, and could consist of processed data combined from several instruments. Level III are merged Level II processed data of various instruments, as well as various missions, in particular Missions 5 and 6. Depending on the amount of on-board processing performed on the science data, Level I may not be available unless

Table 5.3.1-2. Definition of Data Products

Level 0:	Raw data from instrument output
Level I:	Preprocessed sensor data output. Sensor data Earth (LAT, LON, ALT) and in engineering units. Data time ordered, time tagged, and internal calibration and corrections applied.
Level II:	Sensor measured quantities converted to geophysical units. Instrument transfer function and environmental effects removed. Data time ordered, time tagged Earth located (LAT, LON, ALT). Some external data may be required for Level II processing.
Level III:	Integrated sensor data outputs. Sensor measured quantities processed into integrated and mapped geophysical data sets. Processing may involve smoothing, interpolation, and information blending with spatial and temporal averaging. External data may be required for processing and quality control.
Level IV:	Tailored data processing done specifically for a particular end user.

specific means are taken to transmit it prior to Level II processing if this function is performed on-board. This might be desirable on a small selected subset of the data for evaluation purposes.

Other requirements are derived from more fundamental considerations of the system design concepts. Table 5.3.1-3a tabulates the parameters of the various sensors which are pertinent to the C&DH Subsystem. Based on the number of channels, the frequency of data coverage, the precision, and the dynamic range, Table 5.3.1-3b derives the number of bits per word required as well as the resulting data rate for each sensor. Because of the large dynamic ranges required by several of the sensors (of the order of 10^4 and 10^6) it is assumed that an analog amplifier will be used.

The accuracy of the output of the analog amplifier bears a logarithmic relationship to the input accuracy. Specifically, for a given input $S \pm \Delta S$ and a given output of $X \pm \Delta X$, ΔX, the allowable error in the output is equal to:

$$\Delta X = \log \left(1 \pm \frac{\Delta S}{S}\right)$$

Where $\Delta S/S$ is the precision of the input. The values of ΔX are tabulated under the analog amplifier accuracy column. The range of the output, that is, the number of bins required, is the product of the reciprocal of the accuracy and the log of the dynamic range. The number of bits per word is then the number of bits required to represent the range in binary format. In the case of the Photopolarimeter and the LIDAR, the number of bits required can be reduced with a very slight decrease in accuracy as indicated by the numbers in parenthesis. The data rate for each of the instruments then is the product of the number of bits per word, times the number of channels, times the frequency of the observations.

The key conclusion of these analyses is that the data rates are relatively low: Slightly over 100 kbps for Mission 5 and approximately 35 kilobits per second for Mission 6. These calculations do not include overhead for purposes of formatting (sync, fill bits) or for error control encoding (parity, error-correction). Note, however, that the assumption was made that the Interferometric Spectrometer will undergo on-board processing to eliminate

TABLE 5.3.1-3a. SENSOR DATA SPECIFICATIONS

SENSOR	MISSION/ ALTIT-UDE	SPATIAL COVER-AGE (KM)	F.O.V. (DEG.)	SPATIAL RESOLUTION (KM)	TYPE DETECTOR	NO. OF CHAN.	DYNAMIC RANGE	ACCURACY	PRECISION	(Per Channel) FREQUENCY
Geosynchronous Gas Filter Rad (V)	5/ Geo-Synch.	6000 x 6000 square	9.5 x 9.5	200x200	Mosaic (30x30)	6	10^4 mol. cc -3	5%	2.5%	1 frame (900 ele-ments/min.)
Photopolar-imeter		6000 swath	9.5	100	Linear Array	7	10^6 aeros. cc -3	1.3%	0.65% (0.67%)	60 elements/ sec.
Multispectral Linear Array (V)		6000 swath	9.5	100 (5x over-sampling)	Linar Array	5	10^4	1%	0.5%	60 pixels/ sec.
Interferometric Spectrometer		6000 swath	0.017	100 minimum	Spot	N/A	10^4 mol. cc -3	2.5%	1%	
Laser Hetero-dyne Spect.		6000 swath	0.01	100 minimum	Spot	1	10^2 mol. cc -3	2.5%	1%	60 elements/ sec.
Temp. Sounder (V)		6000 swath	1.0	100	Spot	13	300°K	1%	0.5%	60 spots/ sec.
Multispectral Linear Array (VI)	6/ 570 KM	450 swath	42.6	7 (5x over-sampling)	Linear Array	5	10^4	1%	0.5%	64 pixels/ sec.
Temp. Sounder (VI)		450 swath	42.6	7 (5x ols)	Spot	13	300°K	1%	0.5%	64 pixels/ sec.
Sub-MM Wave Radiometer		450 swath	42.6	7 (5x in-track)	Limb Scanner	2	10^3 mol. cc -3	5%	0.8%	10 bins/ sec.
Lasers						6x2	10^6	1%	.5% (.67%)	15 bins/ sec.

TABLE 5.3.1-3b. SENSOR DATA SPECIFICATIONS

SENSOR	MISSION/ ALTIT-UDE	ANALOG AMP ACCURACY	RANGE (DYNA RANGE ACCURACY)	NO. OF BITS PER WORD	DATA RATE BITS/SEC. (SAMPLING FREQ.x # CHANNELS x # BITS)
Geosynchronous Gas Filter Rad (V)	5/ Geo-Synch.	.01	400	9	810
Photopolar-imeter		.0028 (.003)	2143 (2048)	12 (11)	5.040K
Multispectral Linear Array (V)		.002	2000	11	3.3K
Interferometric Spectrometer		.004	1000	10	100K
Laser Hetero-dyne Spect.		.004	500	9	540
Temp. Sounder (V)		.002	1239	11	8.58K 118.27K
Multispectral Linear Array (VI)	6/ 570 KM	.002	2000	11	3.52K
Temp. Sounder (VI)		.002	1239	11	9.152K
Sub-MM Wave Radiometer		.0034	883	10	200
Lasers		.002 (.003)	2770 (2048)	12 (11)	21.6K 34.472K

data not containing information, and thus effect a ten to one bandwidth reduction. If this approach is not implemented, the Mission 5 data rate will be over 1 Mbps.

The ground processing facility requirements are summarized in Table 5.3.1-4. These are derived essentially from the assumptions discussed earlier. The only new requirement not derived from these earlier assumptions is the archiving of all data products for ten years. The data products that will be archived will be the merged data sets. Our baseline assumption is that we will not archive Levels 0, I or II data at the Processing Facility.

The Processing Facility must process the data to the format required by the users. Table 5.3.1-5 lists these products which are also the products which will be archived.

The greatest challenge of the Processing Facility is to merge the data from Missions 5 and 6. The difficulty of performing this function is illustrated in Figure 5.3.1-1. The vastly different geometries of the viewing aspects from the geosynchronous satellite and the low Earth orbiting satellite are clearly evident. The instantaneous fields of view are considerably different. The slant range angles are significantly different for the two satellites and these problems are compounded by the fact that we are doing three-dimensional mapping; i.e., computing geophysical parameters not only of the surface, but at several altitudes. The distorting effects of pointing errors and Earth curvature are different for the two spacecraft and the different fields of view. As an example, a 100 kilometer pixel at the nadir grows to 400 kilometers at a distance of 1500 kilometers from nadir and to 500 kilometers at 3000 kilometers from nadir. Although the geometric correction processes

Table 5.3.1-4. Processing Facility Requirements

- Ingest Data From Missions 5 and 6
- Process Data To Level III
- Deliver 10% Of Products To Users In 2-4 Hours
- Deliver All Data Products Within 24 Hours
- Archive All Data Products For 10 Years

Table 5.3.1-5. Data System Products to the User

1. Concentration levels at each volumetric-resolution element (voresel), for the measured gases.
2. Total atmospheric and tropospheric burden, for measured gases and aerosol.
3. Temperature at each voresel.
4. Vertical temperature and concentration profile graphs.
5. Surface temperature at each pixel corresponding to each voresel.
6. Three dimensional cloud patterns and cloud characteristics.
7. Cloud movement vectors and spread characteristics (growth).
8. Three directional wind vectors, macroscale graphs.
9. Three directional wind vectors for each voresel or voresel-lump.

associated with these distortions are well developed for surface imagery, they are less clear when the mapping must occur at several different altitudes for corrected three-dimensional volumetric elements. These requirements and assumptions lead to implementation approaches which have various options.

5.3.2 DATA SYSTEM TRADEOFFS

The major tradeoff areas are listed in Table 5.3.2-1 are discussed in the following paragraphs.

On-board Processing

Processing data on-board the spacecraft offers several advantages: Reduction of data bulk by conversion to information, quick look for evaluation and interactive operation, exploitation of the real-time availability of ancillary data thereby obviating the need for time-tagging, recording, and recorrelation on the ground, and finally providing data or information immediately usable by the user; i.e., improving the timeliness of delivery of the data. The specific processes which benefit from being performed onboard can be determined only after the processing algorithms have been defined. Although work is progressing on the development of algorithms for many of the sensors applicable to the AOS missions, there is not sufficient information at this time to identify those processes.

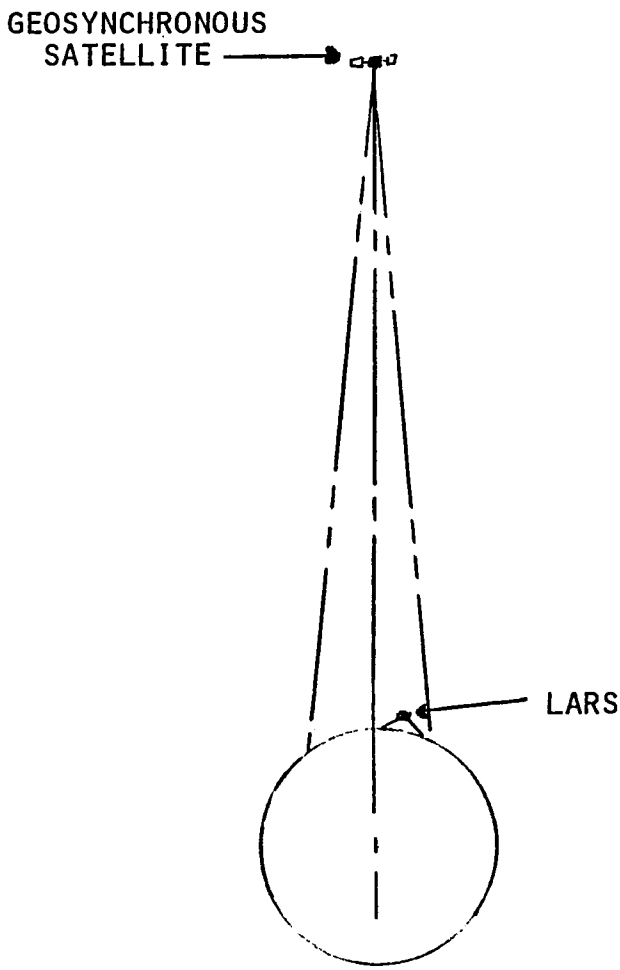

- 3-DIMENSIONAL MAPPING
- DIFFERENT DISTORTIONS
  - POINTING
  - EARTH CURVATURE
- DIFFERENT IFOV'S

FIGURE 5.3.1-1. Correlation of Missions 5 and 6 Data - A Challenge

Table 5.3.2-1. Tradeoff Areas

- Extent On Onboard Data Processing
- Extent Of Spacecraft Autonomy
- Communication Strategy
- Centralized vs. Distributed Ground Processing
- Centralized vs. Distributed Spacecraft Processing
- Extent of Utilization of NEEDS Concepts

Spacecraft Autonomy

The extent of spacecraft autonomy is an operational consideration which trades off manual control of the spacecraft from the ground for sophisticated and automated techniques located on the spacecraft to enable it to take care of itself and respond to anomalies automatically. In an operational system it is desirable to minimize the ground crew required to operate the spacecraft. Automated full detection and recovery techniques can be implemented which will allow the spacecraft to survive failures and anomalies for at least 24 hours. Conversely, although the spacecraft will take appropriate action to survive, we may, in the process lose valuable scientific data until human judgment can develop alternate viable configurations. The spacecraft can be given this additional judgment capability at an increased cost. Therefore, the tradeoff areas involve the cost of providing greater spacecraft sophistication versus the cost saved by reducing the size of human crews on the ground and the value of the potential loss of the scientific data for a given period of time.

Several functions and computations must be performed onboard the spacecraft because of interactive operations, timeliness requirements, or transmission constraints. Among these are: Attitude control, ephemeris computations, telemetry monitoring, packetization processing, stored command processing, power monitoring, and TDRSS antenna pointing control. Several other functions can be performed either on the ground or on the spacecraft. The advent of the TDRSS which can provide extended communication at almost any time increases the numbers of these functions which are candidates for tradeoff. These include solar array pointing control, thermal monitoring, redundancy processing, instrument switching, TDRSS antenna selection logic, tape

recorders management and operation, spacecraft maneuvers and - in the case of STS launched spacecraft - deployment and retrieval.

The advantages from performing these functions onboard accrue from increased spacecraft autonomy as highlighted by the NEEDS Program. These include reduced ground activities with attendant potential reduction in operating cost, reduced dependence on communication links, reduced utilization of communication links, and faster response to anomalies. The disadvantages derived primarily from the higher initial cost of flight equipment and the reduced reliability incurred by placing these functions in space where repair is not possible.

Communication Strategy

This strategy addresses the utilization of the TDRSS and DOMSAT links to get the data from the spacecraft to the Processing Facility. The various options range from continuous transmission, to periodic transmissions storing data, temporarily on-board and then dumping it at multiples of the real-time data rate, depending on how frequently it is dumped and on the contact time selected. The tradeoff benefits are: timeliness of data delivery to users, and TDRSS and DOMSAT costs. If the data are dumped continuously, the processors in the Processing Facility need only operate at real-time speed and are thus a minimum cost equipment. If the data are dumped periodically, then there are tradeoffs as to whether to process the data at real-time for minimum processing cost, or at multiples of real-time speed to expedite the data to the users.

Table 5.3.2-2 indicates the TDRSS user charges. There is a 5 minute minimum time charge for the use of the Single Access link; therefore, there is no point in considering transmission strategies which use the Single Access link for less than 5 minutes. Conversely, it is advantageous to use them for no longer than 5 minutes to minimize the charges. The Multiple Access (MA) link, although apparently inexpensive, needs to be used continuously to transmit the Mission 6 data and runs to approximately $2.85M per year. The Single Access link used once per orbit or once every two orbits runs considerably cheaper per year at a cost in delay of the data. The MA link has a maximum bandwidth of 50 Kbps whereas the single access link has a bandwidth of 300 Mbps. Since this is so much higher than anything required by the AOS missions bandwidth, effectively, is free and time is what we pay for. Conversely, on the DOMSAT

Table 5.3.2-2 TDRSS User Charges

Service	Minimum Cost/Hour	Maximum Cost/Hour	Average Cost/Hour
Single Access	$4,370	$5,430	$4,900
Multiple Access Forward	965	1,200	
Multiple Access Return	290	360	325

link we lease a channel of only the bandwidth needed by the mission but for very long periods of time: i.e., a year, 2 years, etc. Accordingly, DOMSAT cost are a function of bandwidth and not of time; therefore, the communication strategy must consider these two potentially conflicting cost determination scenarios.

Table 5.3.2-3 quantifies the Level 0 data and assumes that there is no onboard processing. This is probably legitimate as a first-cut approach since, unless we do extensive processing onboard, the data quantity reduction will probably not be significant. On Mission 5 the amount of data collected per hour is 4.25×10^8 bits which is within the state-of-the-art of today's tape

Table 5.3.2-3. Level 0 Data Quantifications

Data Rate	Transmission Rate @ 5 Min. Per
Mission 5	
1.2×10^5 Bits/Sec.	Once/Hour - 1.4×10^6 Bits/Sec.
4.25×10^8 Bits/Hour	
1.02×10^{10} Bits/Day	Once/Day - 3.4×10^7 Bits/Sec.
3.7×10^{12} Bits/Year	
Mission 6	
3.5×10^4 Bits/Sec.	Once/Orbit - 6.9×10^3 Bits/Sec.
1.3×10^8 Bits/Hour	
3.0×10^9 Bits/Day	Once/Day - 9.9×10^6 Bits/Sec.
1.1×10^{12} Bits/Year	

recorder. The 10^{10} bits per day collected exceeds today's tape recorder capabilities or, at least, stretches them indicating that we would probably want to dump more often than once per day. The transmission rates indicated in the right hand column, assuming a 5 minute transmission period, are well within the state-of-the-art and certainly fit within the Single Access channel of the TDRSS; however, as the bandwidth is increased, as noted earlier, the costs of the DOMSAT link increase. TDRSS costs far overwhelm DOMSAT costs, at least for relatively frequent transmission periods. This is because TDRSS is offering us a 300 Mbps channel whereas DOMSAT is providing only the 35 or 120 kilobits per second channel that we really need. As a first-cut it would appear that the less frequent the transmissions, the lower the costs; however, as indicated earlier the data gets to be older and older as we wait to dump them and the time of their availability to the user from collection is increased. This can be alleviated somewhat by faster processing; however, one must note that if the data are dumped only once per orbit, the data at the beginning of the orbit would be 95 minutes old, even if the processing were done in zero time (the data collected at the beginning of the orbit). To evaluate the impact of the equipment costs of the tradeoff, Table 5.3.2-4

Table 5.3.2-4 Machines Applicable to AOS Processing

Model	MOPS	Cost ($M)
170-720	1.4	0.5
-730	2.2	0.75
-740	5.7	1.5
-750	7.5	2.3
-760	10.1	3.1
176	15	4.2
205 With 1 Vector Pipeline	100	5.9
205 With 2 Vector Pipelines	200	6.6-8.9
205 With 4 Vector Pipelines	400	10.5-14.5

tabulates approximate costs for representative machines of various computing capabilities. The computing power is indicated as Millions Operations Per Second (MOPS). Although admittedly not a rigorous yardstick, it is more than adequate for comparative purposes at this level of tradeoff. Note that these are CPU and HSM costs and do not include all peripherals which would be required and typically result in complete system costs double or triple the costs indicated here.

One can now develop costs as a function of data timeliness to users. Tables 5.3.2-5 and 5.3.2-6 indicate the latency of the oldest data to the user for various transmission modes and various processing speed multipliers. The number of operations per second required to process the data from Mission 6 was estimated based on calculations performed for several instruments of the same type as will be flown on Mission 6. The calculations for the operations per second for Mission 5 are a direct scaling based on data rate. Figure 5.3.2-1 is a plot of the data contained in Tables 5.3.2-4, 5.3.2-5 and 5.3.2-6. Curves A through F represents the relative cost as a function of timeliness of data delivery to the users for various frequencies of dump. In particular, note the continuous tranmission point indicated as a short dash. The various points on these curves are for various speeds of processing. The lowest point being real-time processing and the higher point being the costs associated with processing speeds which are multiples of the real-time processing speed. The curves become more and more vertical as they approach shorter delivery times to the users because at short delivery times the major determining factor is the latency of the data while it was being stored onboard; increasing the processing speed cannot reduce this time. As we get to longer time periods, processing the data faster does result in significant time savings. Curve G is the locus of the real-time processing for the various frequencies of dumps. It is interesting to note that this curve reaches a minimum at approximately 15 hours. The explanation for a minimum is as follows. During short delivery times (from 0 to 10 hours) the TDRSS costs predominate because of its frequent utilization. From 10 to 20 hours, the costs are primarily determined by the costs of the processing equipment. As the dumps become less and less frequent the data rates that are used to maintain the 5 minutes dump time begin to impact the DOMSAT costs and these now start having a notable effect while the TDRSS costs have become insignificant. The insensitivity of the shape of the curve relative to

TABLE 5.3.2-5. MISSION 5 TRANSMISSION AND PROCESSING OPTIONS

LATENCY TO USERS	TRANSMISSION MODE	PROCESSING TIME	DATA RATE (BPS)	MOPS	TDRSS COSTS* ($M /YEAR)
1-3 Hours	Continuous	Real Time	118K	32.9	8.6 (MA)
2 Hours	1/Hour	Real Time	1.4M	32.9	3.6
4 Hours	1/2 Hour	Real Time	2.8M	32.9	1.8
6 Hours	1/3 Hour	Real Time	4.2M	32.9	1.2
8 Hours	1/4 Hour	Real Time	5.6M	32.9	0.9
14 Hours	1/7 Hour	Real Time	9.8M	32.9	0.51
30 Hours	1/15 Hour	Real Time	21.0M	32.9	0.24
30 Hours	1/Day	4X Real Time	34.1M	131.8	0.15
36 Hours	1/Day	2X Real Time	34.1M	65.9	0.15
48 Hours	1/Day	Real Time	34.1M	32.9	0.15

*Assumes TDRSS costs for sat. at Geosynch. altitude

Table 5.3.2-6. Mission 6 Transmission and Processing Options

LATENCY TO USERS	FREQUENCY OF DUMP	PROCESSING TIME	DATA RATE (BPS)	MOPS	TDRSS COST ($M/YEAR)
1-3 Hours	Continuous	Real Time	34.5K	9.6	2.85
1.7	2/Orbit	Real Time	17.3K	9.6	4.3
3 Hours	1/Orbit	80 min.	689K	12.0	2.15
3.3 Hours	1/Orbit	Real Time	689K	9.6	2.15
5 Hours	1/2 Orbits	2X Real Time	1.4M	19.2	1.08
6.7 Hours	1/2 Orbits	Real Time	1.4M	9.6	1.08
10	1/4 Orbits	2X Real Time	2.8M	19.2	0.537
13.3	1/4 Orbits	Real Time	2.8M	9.6	0.537
13.3	1/7 Orbits	7X Real Time	4.8M	67.2	0.307
23.3	1/7 Orbits	Real Time	4.8M	9.6	0.307
30 Hours	1/Day	4X Real Time	9.9M	38.4	0.15
33.3	1/10 Orbits	Real Time	6.9M	9.6	0.215
36 Hours	1/Day	2X Real Time	9.9M	19.2	0.15
48 Hours	1/Day	Real Time	9.9M	9.6	0.15

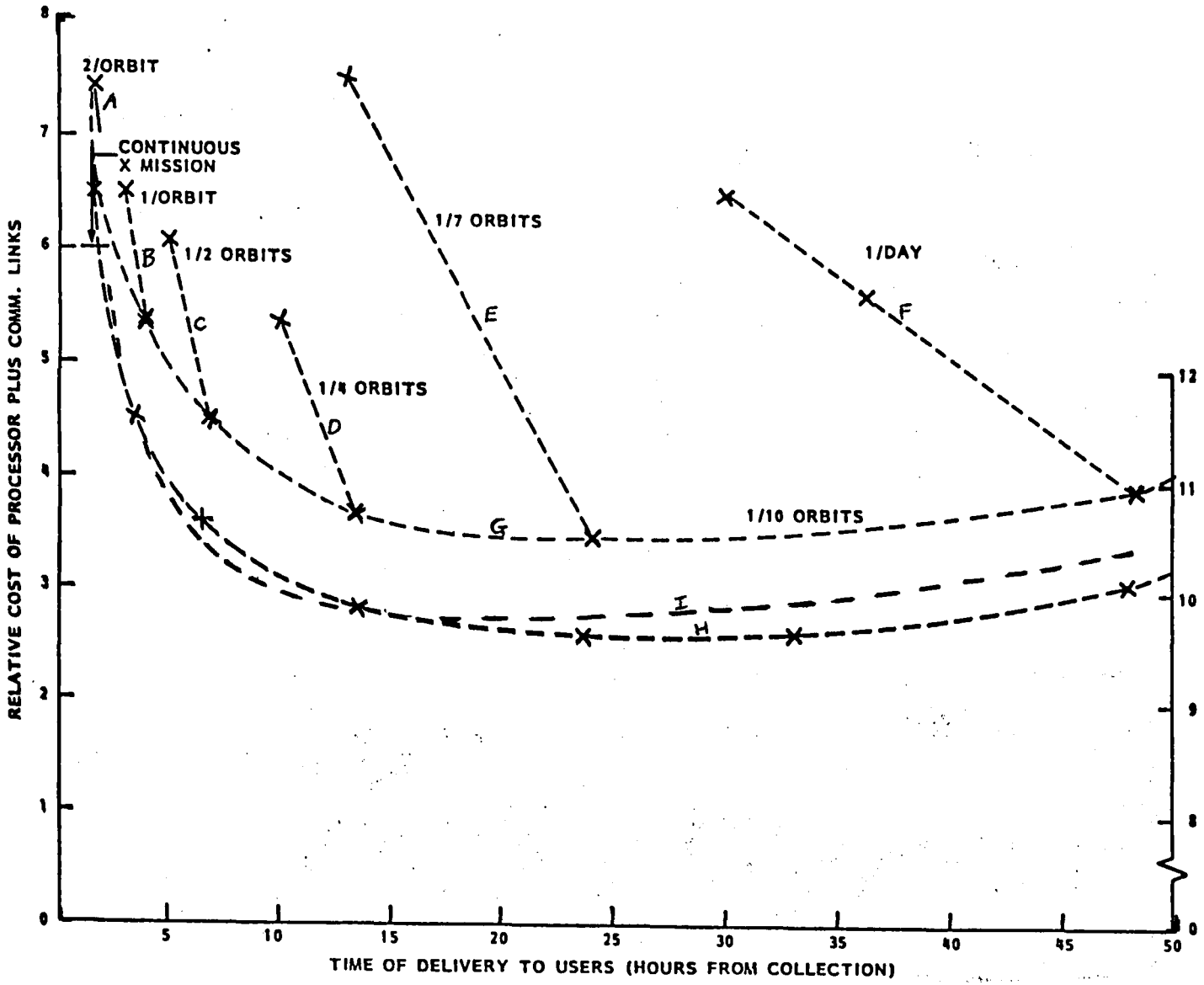

Figure 5.3.2-1. Transmission and Processing Strategy Impact on System Cost

processing equipment costs is indicated by Curve H which assumes that the processing equipment costs are triple those shown in Curve G. The ordinate values change but the shape of the curve is essentially identical. Curve I is the same as Curve G except plotted for Mission 5. The effect of the increasing DOMSAT costs show up earlier because of the triple data rate of Mission 5 over Mission 6; but the minimum still occurs at approximately 15 hours. The bearing of this analysis on the requirements assumed earlier is that meeting the delivery time of 90% of the data to the users within 24 hours is well within the capabilities of a cost-effective system. Meeting the 2 to 4 hour delivery requirement can also be achieved, but at a significantly increased cost for most data. Note that several scenarios can be envisioned which deliver these 10% of the data to the users at an only slightly increased cost if the 10% are on a per-orbit basis rather than on, let's say, a per-day basis or a per-month basis. For example, the MA link could be scheduled for 10% of the orbit and the 10% of the data needed within the short time period could be transmitted continuously during that 10% of the orbit at a relatively low cost. Unfortunately, present administrative plans for the utilization of the TDRSS channels requires a 30-day in advance scheduling of the use of the links. Presumably, the 10% of the orbit required for transmission on a continuous basis could not be predicted that far in advance. Additional information on the specific nature of the 10% of the data that are required for rapid transmission will be needed in order to evolve the suitable strategy for the transmission of those data.

Centralized vs. Distributed Ground Processing

Tradeoffs are required to determine whether processing should be performed on a centralized basis versus a distributed basis from several points of view: location, function, and task. In addition to optimizing the processing, other considerations impact the selection of the approach. A large centralized machine has several advantages; however, it requires "putting all the eggs in one basket". Distributed systems using several smaller machines have the inherent advantage of providing spare capabilities at a considerably lower cost, given that all the machines are identical. Other considerations include software, operating system, and software/hardware integration. Our present level of understanding of the processes required, based on the algorithms, does not permit finalization of these tradeoffs at this time. A preliminary assessment for ground processing would indicate that Missions 5 and 6, Level

II processing, should be performed in separate machines, and the correlation of the data in the third machine.

Centralized vs. Distributed Spacecraft Processing

The criteria involved in making this same tradeoff for the onboard processing derive from totally different considerations. There are several instruments, presumably developed by different Principal Investigators for different applications Data Users. A centralized processor would create problems in coordinating the activities associated with testing and checkout of the individual instruments at the developing site. Distributed processing enables the dedication of a processor to each individual instrument with attendant easing of the constraints associated with checkout and testing. Additionally, this provides considerably greater flexibility in the addition of instruments should this prove desirable as the program progresses. Also, this approach provides greater reliability in that the loss of a processor may, at worst, cause the loss of the data from an instrument but not the entire science package. Accordingly, the preliminary assessment indicates that a distributed approach is preferable for the onboard processing.

NEEDS Concepts

NASA is presently developing concepts for future data systems and the technologies they will require. These include Information Adaptive Systems for onboard control of the spacecraft and its payload; Modular Data Transport system; Data Base Management Systems; Software Verification and Testing, and etc. It is anticipated that these associated technologies will be available to spacecraft program managers in the timeframe of AOS. The on-going NASA End-to-End Data System (NEEDS) Program will provide several technologies which are beneficial to the AOS mission. A result of the analysis indicates that the Information Adaptive System with the ability to perform sensor data processing onboard will be highly applicable. The Data Base Management System and Archival data storage concepts will also be applicable to the AOS data archiving function on the ground. The packetized telemetry concept inherent in the modular data transport is particularly applicable to a multi-instrument spacecraft.

5.3.3 DATA SYSTEM IMPLEMENTATION

The result of the tradeoffs and analyses discussed in the last subsection were used to develop the complete C&DH Subsystem. Figure 5.3.3-1a/b is a block

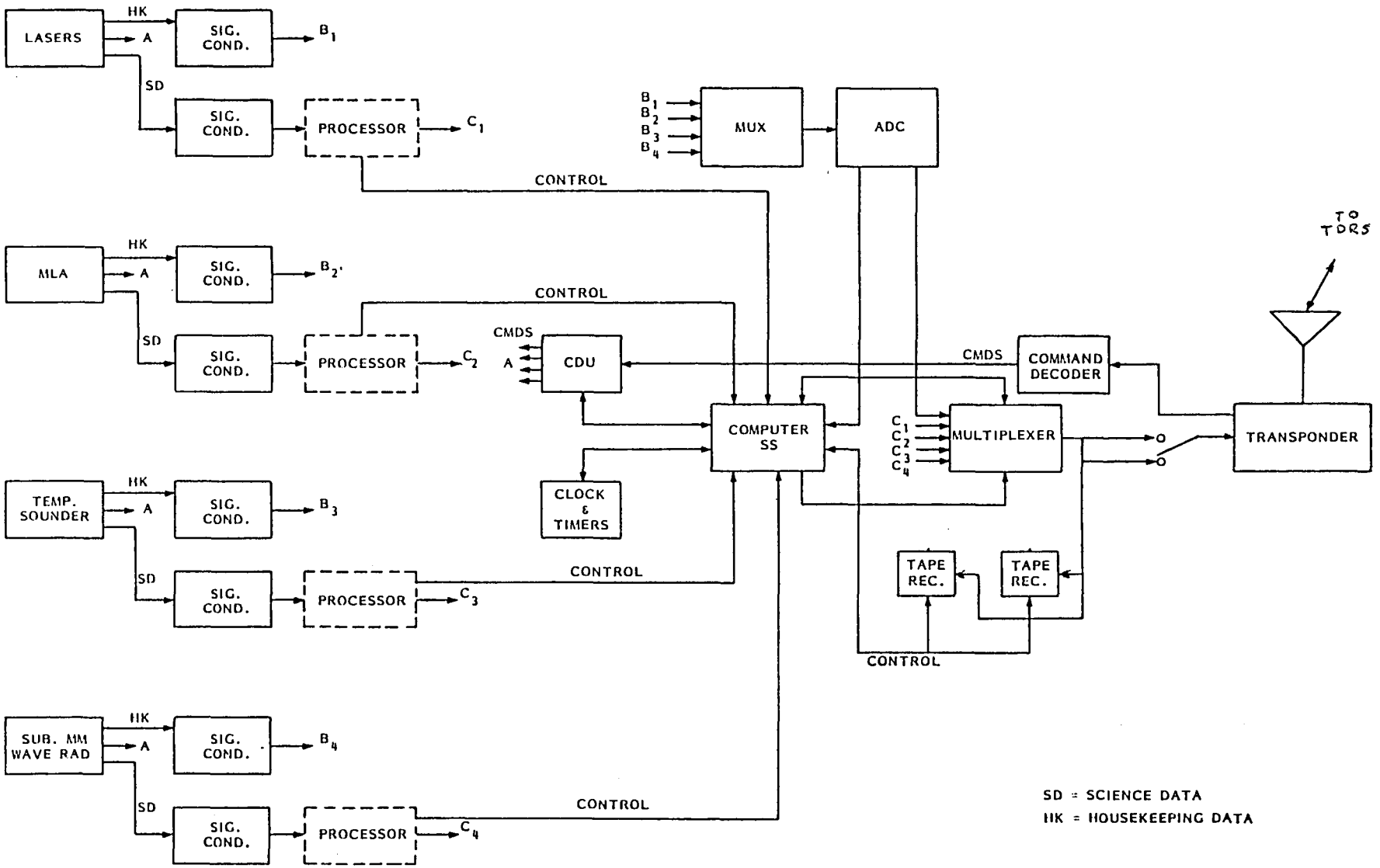

Figure 5.3.3-1a. End-to-End C&DH Subsystem

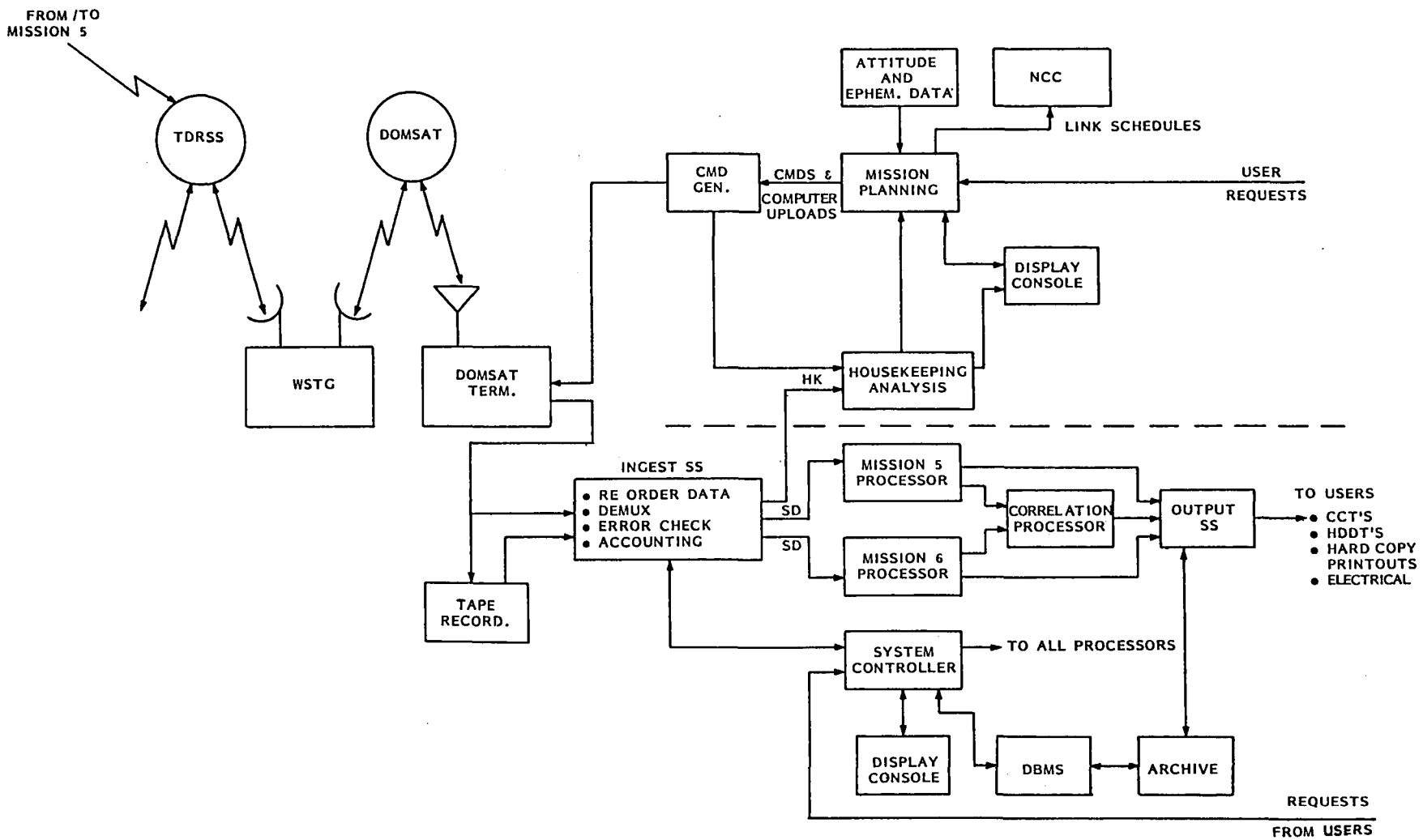

Figure 5.3.3-1b. End-to-End C&DH Subsystem

diagram showing the major elements of the End-To-End Subsystem. Figure 5.3.3-1a shows the Mission 6 spacecraft elements while Figure 5.3.2-1b shows the ground segment elements. Mission 5 data are shown as an input to the TDRSS per the assumptions made in earlier subsections regarding the availability of a relay satellite for geosynchronous spacecraft. The onboard portion of the C&DH for Mission 5 is similar or identical to that of Mission 6 with the exception of the different instruments and, therefore, is not shown here. The spacecraft outputs two different types of data: housekeeping data and science instrument data. Depending on the amplitude and format of these outputs, signal conditioners may be required prior to further processing onboard. Each science instrument also has an input from the command distribution units indicated as (A) in the diagram. This input services both commands to the instrument and any program which may be needed for a self-contained processor within the instrument. The housekeeping data are assumed to be analog although digital data will also be handled. These are multiplexed in a multiplexer whose inputs are labeled as (B). The data are then converted to digital format and multiplexed again with the science data whose inputs are shown as (C). The science data, following signal conditioning as necessary, are processed to an extent yet to be determined as discussed earlier in a dedicated processor. Since the requirements for these processors has not yet been firmly determined for each instrument, they are shown as dashed boxes. The processors can be general purpose computers or special purpose machines or hard wired logic. The output of the processors (C) are then fed into the main spacecraft multiplexer which combines them into a single serial digital data stream for transmission to the ground. If a packetization scheme is implemented, the multiplexer will be compatible with this concept and will issue signals and accept data as required from each of the instruments in turn. Tape recorders are needed to record the data for periodic dumping purposes if that should be the selective scheme. Note that even in the continuous transmission mode, tape recorders will still be required to buffer the data during periods of TDRSS occultation.

Uplink commands from the ground flow from the Transponder to the Command Decoder, then to the Command Distribution Unit (CDU) and distributed to the appropriate instrument. If they are to be pre-stored timed commands, they are fed to the Computer Subsystem.

The Computer Subsystem is envisioned at this time to be a relatively small machine which only performs control functions for the science data processors as well as all the other elements of the onboard C&DH Subsystem; and perform only simple functions on the housekeeping data, such as Limit Checks and Conversion to Engineering Units. The computer is not intended to perform the "number crunching" functions except in the computations required for orbit and attitude determination. At this time it is envisioned that the computer would be a machine with a computational capability of approximately 250 to 300 thousand operations per second (KOPS). Depending on the level of autonomy and the degree of sophistication required, the computer may grow to be a 500 or 600 KOPS machine. Based on analyses of the processing required by instruments similar to those on Mission 6, the science data processors would probably be machines capable of 2 to 4 MOPS.

The output of the multiplexer can either be fed in real-time to the transponder and/or to the tape recorders. The output of the multiplexer or of the tape recorders are formatted for RF transmission and transmitted to the TDRSS at the appropriate times. It is then related to the White Sands Ground Terminal at White Sands, New Mexico; thence relayed to the Data Processing Facility. It is assumed that this relay will be effected by means of a Domestic Communications Satellite (DOMSAT). Although this relay could presumably be effected by land lines, recent analyses have indicated that satellite communications is cheaper than wire communications for distances exceeding a few hundred miles.

Following long established practices the data are tape recorded immediately upon arrival at the Processing Facility primarily to insure preservation of the data should a malfunction occur anywhere within the facility. The Injest Subsystem of the Processing Facility reorders the playback data from the spacecraft. Spacecraft tape recorders play back the data in the reverse direction in which it was recorded requiring that a reordering process be performed on the ground prior to subsequent processing. The data are demultiplexed and the science data and housekeeping data are separated and sent to the appropriate computers for further processing. Error checking and data accounting are also performed by the Injest Subsystem.

The system controller performs the same function as the Computer Subsystem onboard the spacecraft; i.e., it controls the configuration of the system and its elements and routing of all data without itself performing any computations on the data. The science data are processed to Level II in the Mission 5 and Mission 6 processors as appropriate, and to Level III in the correlation processor. The Output Subsystem provides the necessary interface and desired data format for the users. Level III data are also input into the Archival Subsystem under the control of the Data Base Management System. Requests from users for retrospective data are fed to the System Controller which, at the appropriate time, commands the Data Base Management System to direct the archive to output the requested data to the Output Subsystem for delivery to the requesting user.

Housekeeping data are analyzed to insure spacecraft health and that its status corresponds to issued commands. Mission planning, which generates both commands and computer uploads for the instrument-dedicated processors, uses the status of the spacecraft as an input, along with user requests which impact instrument or spacecraft operations, and attitude and ephemeris data. The mission plan is then converted to specific commands in the appropriate format for uplinking to the spacecraft. Mission plannning also coordinates with the Network Control Center (NCC) for scheduling of all appropriate communication links. Various consoles are also provided to display quick-look data to the operators in assisting them to make decisions regarding configuration of the ground system and actions to be taken on the various data.

The functions performed by the elements of the Ground Processing Facility have been discussed earlier with the exception of the archival storage requirements. Table 5.3.3-1 summarizes the data which are to be stored in the archive. The number of resolution elements combined with the frequency of sampling, yields the number of words per year to be stored for each information type. Each word contains the data, which is the magnitude, and the location, in terms of latitude, longitude, and altitude, as well as a time tag correlated to the time of the observation. Each word in the archive thus consists of 82 bits. The total storage per year is 2.13×10^{11} bits and over a 10 year period a total of 2.13×10^{12} bits. This is not an unreasonable number, and as indicated in Table 5.3.3-2, there are many candidate devices to provide this magnitude of storage. In several cases, however, cost is a dominant factor. The optical disc technology offers the

needed storage capacity, the archival life, and reasonable cost to satisfy the AOS requirement. Under present state-of-the-art in disc technology we could fit the 10-year's worth of data on 100 discs. Successful resolution of present efforts to increase the storage capacity of the discs by one order of magnitude would reduce the total number of discs to 10 for the 10 year periods. The major challenge in the archive will be to devise techniques which permit easy and rapid access and delivery of the data in the needed formats at low cost. This may require putting the data on a considerably larger number of discs simply to ease access. The entire Ground Processing Facility, as configured, can be implemented with off-the-shelf hardware.

5.3.4 DATA SYSTEM TECHNOLOGY IMPLICATIONS

This paragraph discusses the impacts of technology on the AOS C&DH System and the applicability of some of the NEEDS concepts.

The basic requirements of the entire C&DH System can be met using today's technology. Depending on the extent of the onboard processing performed, some technologies, as discussed further, are enabling. In most cases, the technologies are simply enhancing; i.e., they provide benefits in the areas of cost reduction and increased reliability. Table 5.3.4-1 summarizes the technology implications on the AOS.

Onboard processing will benefit from improvements in the computational power of space-qualified computers. Random access storage is an inherent part of real-time processing. Previous studies have indicated that random access memories of the order of 10^9 bits are frequently required to perform these processes on-line. It is estimated that space-qualified computers with capabilities of the order of 2 - 4 MOPS and space-qualified random access memories of the order of 10^9 bits will satisfy the more stringent onboard processing requirements.

Present tape recorders can meet all of the AOS requirements for onboard storage. Tape recorders, however, are notorious for low realibility. Additionally, they use significant amounts of power. It is anticipated that solid state memories primarily based on the magnetic bubble technology will be configured in large-size memories in the near future. Space-qualified memories of the 10^9 to 10^{10} bit size will be sufficient to replace tape recorders.

Table 5.3.3-1. Missions 5 and 6 Archival Storage Requirements

INFORMATION	No. OF RESOLUTION ELEMENTS	FREQUENCY OF SAMPLING	CAPACITY (BITS PER YEAR)
CONCENTRATION - 8 GASES	900 x 3	8/DAY	63×10^6 WORDS
CONCENTRATION - 12 GASES	1594 x 15	15/DAY	1.5×10^9 WORDS
AEROSOL CONCENTRATION - 5 CATEGORIES	1594 x 15	15/DAY	0.6×10^9 WORDS
SURFACE TEMP.	3600	8/DAY	3.6×10^4 WORDS
	1594	15/DAY	2.3×10^4 WORDS
CLOUDS & FRONTS	3600	8/DAY	3.6×10^4 WORDS
	1594	15/DAY	2.3×10^4 WORDS
WIND VECTORS - 3 DIMENSIONS	1594 x 15	15/DAY	0.4×10^9 WORDS
			2.6×10^9 WORDS

SIZE OF WORDS
(BITS)

LAT	12	(ACCURACY 10 KM)
LON	12	(ACCURACY 10 KM)
ALT	4	(ACCURACY 1 KM - RANGE 15 KM)
TIME	34	(ACCURACY 1/2 SECOND)
MAGNITUDE	20	(RANGE 10^6)
TOTAL	82	

(TOTAL STORAGE $2.6 \times 10^9 \times 82 \times 10 = 2.13 \times 10^{12}$ BITS (OVER 10 YEARS)

Table 5.3.3-2. Characteristics of Storage Devices

DEVICE	USER CAPACITY Mbytes	ACCESS TIME	DATA RATE (Mbit/sec)	HARDWARE COST	HARDWARE COST/BIT (cents)	MEDIA/COST	MEDIA COST/BIT (cents)	ARCHIVAL LIFE
MAGNETIC DISC IBM 3340	70	35 ms	7.0	$ 20,000	3.6×10^{-3}	MAGNETIC DISC PACK $2,200.	4×10^{-4}	2-3 yrs.
MAGNETIC TAPE IBM 3420-B 6250 BPI(2000 BYTE RECORD)	91	45 sec.	3.33	$ 28,440	3.9×10^{-3}	MAGNETIC TAPE 2400 FEET $16. A REEL	1.45×10^{-6}	1-2 yrs.
MASS STORAGE SYSTEM IBM 3850	462,500	16 sec.	7.0	$2,400,000	6.5×10^{-5}	9400 CARTRIDGES @ $20. EACH $188,000.	5×10^{-6}	1-2 yrs.
CONTROL DATA CDC #38500	1,000,000	>7 sec.	6.4	>$2,400,000	$>3 \times 10^{-5}$	125,000 TAPE CARTRIDGES @ $14.75 $1,843,750	2.3×10^{-5}	1-2 yrs.
AMPEX TERABIT	357,500	15 sec.	9.6	>$2,000,000	$>7 \times 10^{-5}$	2" VIDEO TAPE 62 REELS @ $400 $24,800.	8.6×10^{-7}	1-2 yrs.
CALIF.COMPUTER CORP.AUTOMATIC TAPE LIBRARY (A.T.L.)	550,000	15 sec.	7.0	>$2,000,000	4.5×10^{-5}	6122 REELS MAGNETIC TAPE $ 98,000	8.9×10^{-6}	1-2 yrs.
PHILIPS LABS OPTICAL DISC	2500 (25,000)	100 TO 500 ms	5-10+	$ 10,000	5×10^{-5} (5×10^{-6})	OPTICAL DISC/$10	5×10^{-8} (5×10^{-9})	>10 yrs.
PHILIPS LABS OPTICAL DISC PACK	125,000	50 TO 500 ms	10-50	$ 200,000	2×10^{-5}	OPTICAL DISC PACK $150.	1.5×10^{-8}	>10 yrs.

PERFORMANCE AND COSTS OF MAGNETIC EQUIPMENT FROM "DATAPRO", WHILE OPTICAL DISC FIGURES ARE BEST ESTIMATES ONLY.

Table 5.3.4-1. Technology Implications

Technology Advance	AOS Application
Space Qualified Computer (__ 2 MOP)	Onboard Processing
Space Qualified Rams (10^9 Bits)	
Solid State Memories (10^9 - 10^{10} Bits)	Replace Tape Recorders
DBMS and Archival Storage	Reduce Cost
Communications	

Additional improvements in Data Base Management Systems and archival storage technologies can be looked to to reduce cost. As pointed out earlier, present technology meets the archival requirement of the AOS. Similarly, improvements in communication technology will result in lower cost and lower weight and power for the onboard equipment, but is not expected to improve performance significantly in the AOS Communications System as defined by its present requirements.

The NEEDS concepts directly applicable to the AOS requirements were reviewed. The Information Adaptive Systems aspects of NEEDS is directly applicable to the editing of the interferometer data in that we want to select only data containing information. It is probable that as additional knowledge of the algorithms is gained for the other sensors, similar information adaptive processing can be performed onboard. The DBMS and archival data storage concepts being developed under the NEEDS Program are directly applicable to the AOS data archiving function. The Packetization concept is highly effective for spacecrafts carrying multiple instruments as is the case of the AOS missions. By transmitting the data from each instrument as a complete packet containing both science data and required ancillary information, packetization considerably eases the ground functions associated with demultiplexing, identification, classification, accounting, quality checking, and distribution of the various sensors' data.

In conclusion, advances in technologies will have only an enhancing impact on the AOS C&DH System. This assumes that onboard processing is desirable, but is not an enabling requirement. Several NEEDS concepts are highly relevant to the AOS; other NEEDS concepts not identified at this time may subsequently be

selected as also beneficial as greater in-depth into the specific processes required by the AOS sensors is developed.

Communications strategy will be a major determinant of system cost over the 10 year period. In particular, the specific utilization strategy of TDRSS will impact the overall cost by percentages ranging from 25 to 50. Scenarios which nullify the impact of the 30 day scheduling requirement for TDRSS must be developed to maintain flexibility while achieving low cost.

While the processing algorithms will require complex software, for example, as pointed out earlier in the discussion of the voresel by voresel measurement correlation between various sensors, and between Missions 5 and 6, the hardware to perform these functions is off-the-shelf today. The impact of technology in this area, therefore, will be associated with the development of the software rather than with its operation.

SECTION 6

TECHNOLOGY NEEDS ASSESSMENT

SECTION 6
TECHNOLOGY NEEDS ASSESSMENT

The previous sections in this report have dealt with the atmospheric research needs, selection of sensors, synthesis of missions, and system design associated with the Tropospheric Program. This section deals with the definition of those technologies which would be required in order to implement the system and thus satisfy the measurement requirements. The methodology encompasses the following steps:

1. The developmental advancements necessary to implement this system were identified, and constituted the potential technology advances.

2. The developmental advancements were analyzed relative to their technology content and the degree of interdependence between the systems/missions and these advancements. In each of the identified technology items the AOS need was defined, the timeframe of technology was delineated, technology drivers were identified, the state-of-the-art was examined, and a technology projection was forecasted relative to the capability of meeting the advanced technology needs within the timeframe of the AOS requirement.

3. The technology gaps for AOS were identified. A gap exists in a technology area where the technology projection does not satisfy the AOS needs as defined for that timeframe.

4. A technology rank was assigned to the various technologies in order to determine the degree of criticality of the development of that technology capability, relative to the accomplishment of the missions.

5. Recommendations are made relative to the steps that should be taken for future implementation of the AOS Technology Development Program.

6.1 IDENTIFICATION OF NEEDED ADVANCEMENTS

Six categories of potential technology advances needed were identified. The first relates to the establishment of a baseline of tropospheric data. During the analyses leading to the selection of sensors in Task 1, it was found that there are deficiencies in certain types of data presently to perform the sensor designs or to select the spectral regions that are more suitable for the required measurements. Improvements in analytical and experimental techniques are necessary to overcome this deficiency.

Another category relates to general sensors, i.e., those which did not relate to a particular sensor type, whether it is optical or microwave, passive or active. Typical potential technology advances in this category include

sensing techniques for specific trace species and environmental control of detectors or optics for a variety of sensors.

Two sensor-related categories which deal with advancements in passive and active sensors respectively. Following the guidelines of the Study no specific technique for meeting the measurement needs was emphasized at the exclusion of the others. The passive sensors employ measurement and sensing techniques which use natural illumination or emission. The active sensors, on the other hand, employ artificial illumination in the optical portion as well as other portions of the electromagnetic spectrum.

An important category of potential technology advancements relates to command and data handling. In this Study the technology dealt with the end-to-end data management system including on-board, relay, and ground functions for transforming sensor outputs into information to the users.

The last category relates to the spacecraft design. The technologies here deal with spacecraft support subsystems, structures, operations, and interfaces between the orbital element and other elements of the AOS System.

6.2 TECHNOLOGY NEEDS

This section discusses the potential technology advances in sufficient detail to permit subsequent assessment whether that item constitutes a technology gap, and subsequent assessment of the criticality of the technology needs. Each of the advancement categories described in Section 6.1 will be covered in a separate subsection, and the individual potential advancements belonging to that category will be detailed therein.

6.2.1 TROPOSPHERIC BASELINE DATA NEEDS

Figure 6.2.1-1 shows the five developmental advancements that correspond to this category of needs. Four of these have passed the test which classify them as technology requirements. Task 4 which deals with specification of measurement requirements is considered an engineering/scientific development. In most cases where a development is not considered a technology requirement, the reason is that it did not constitute an advancement in the state-of-the-art. This does not minimize its importance, and may include items that will be essential to the Tropospheric Program.

Enabling = ● Enhancing = 0

ADVANCEMENT	TECHNOLOGY		MISSION DEPENDENCE					
	YES	NO	1	2	3	4	5	6
1. CONCENTRATION RANGE OF GASEOUS SPECIES	X		0	0	0	0	0	0
2. DETAILED SPECTRAL DEFINITION	X			0	0	0	0	0
3. IMPROVED DEFINITION OF AEROSOL PROPERTIES AND GROWTH	X			0	0	0	0	0
4. DETAILED SPECIFICATION OF MEASUREMENT REQUIREMENTS		X						
5. CHEMICAL KINETICS OF GASEOUS AEROSOL SPECIES	X			0	0	0	0	0

Figure 6.2.1-1. Technologies Classification Matrix - Tropospheric Baseline Data

It is noteworthy that all the items in this first category are enhancing (rather than enabling), with respect to one or more of the missions. This is shown in the matrix to the right of that figure in which each intersection is a relevant technology, either enhancing or enabling, relative to Missions 1 through 6.

Technology Development 1 - Definition of Concentration Ranges Of Gaseous Species

The AOS requirement here is to define the range for the concentration measurements of the gaseous species under a large variety of atmospheric and ground conditions. A wide dynamic range exists in the concentration due to variations in total burden as a function of altitude. The importance of this is that as the range increases due to uncertainty, the sensor design is made more complex and, therefore, more costly.

The timeframe for establishing the dynamic ranges for the important species will be in 1985, to support the portion of the space program for AOS commencing in 1989. From this point of view, this becomes one of the early items that must be addressed in order to permit the program to proceed.

The technology drivers for this item are the low concentration burdens and wide dynamic range both of which present difficulties in the tropospheric measurements.

The state-of-the-art in the determination of dynamic range is typified by predictions made from model calculations. Table 6.2.2-1 show some examples of ranges that are obtained from both model calculations and test data.

The assessment indicates that there will not be a technology gap; however, continuing effort is required in determining the dynamic range of tropospheric species.

Technology Development 2 - Detailed Spectral Definition

High resolution, accurate spectral line definition for trace species is important both in the design of sensors/measurement techniques and in the interpretation of remotely sensed data. The line and band locations, as well as shape corresponding to trace species and interfering constituents are basic to the experimental research.

Table 6.2.2-1. Gaseous Burden Ranges

	MIN.	NOM.	MAX.	
O_3	1.2 (2)	2.3 (2)	3.0 (2)	ppm-m
H_2SO_4	4.0 (-3)	5.6 (-2)	4.0 (-1)	
H_2O	2.0 (6)	4.1 (7)	1.6 (8)	
HNO_3	2.0 (0)	2.3 (1)	2.0 (2)	
NH_3	4.0 (-1)	4.5 (0)	4.0 (1)	
NO	1.0 (0)	2.0 (0)	3.0 (0)	
CO	2.8 (2)	8.0 (2)	2.8 (3)	
SO_2	8.0 (-2)	8.1 (-1)	8.0 (0)	
OH	2 (-3)	1 (-2)	5 (-2)	
H_2S	1 (-2)	1.8 (-1)	2 (0)	
HO_2	1 (-2)	1.2 (-1)	1 (0)	
CH_4	5 (3)	1.1 (4)	3 (4)	
NO_2	8.0 (-1)	1.7 (0)	2.4 (0)	
H_2CO	1 (-2)	1.4 (-1)	1 (1)	
CS_2	1 (-2)	1.1 (0)	1 (1)	
COS	1 (-1)	3.1 (0)	3 (1)	

Although a large body of experimental research spectral data already exists the task is not nearly complete, considering the wide variety of trace species, atmospheric constituents, spectral regions, and environmental conditions. In determining the continuum in a given spectral region one must consider not only the strong lines of leading interfering constituents, (i.e., CO_2), but also the contribution from other constituents such as H_2O and N_2. In order to meet the prerequisites for sensor design in AOS, this technology needs to be attained by 1985 in selected portions of the electromagnetic spectrum. Embarking upon a broad-based tropospheric measurement program without this accurate definition may present risks in terms of data quality and possible costly repetitions in the experiments.

The state-of-the-art is characterized by lack of uniformity, that is, some spectral regions and species are very well known while others are known in much less detail. Some constituents such as water vapor are fairly well defined in most regions, whereas emphasis on accurate spectral definition for sulfuric acid in the atmosphere, for instance, is not commensurate with its important role in the acid rain problem. Much of the available spectral definition is based on computer-aided synthesis based on Lorentzian line profiles. Appropriate corrections through experimentally verified "form factors" are being applied in many areas; however, additional effort is required in specific species and spectral regions pertinent to the troposphere. The assessment in the Study shows that a technology gap exists relative to spectral data that will be needed to implement the AOS Program.

Technology Development 3 - Improved Definition Of Aerosol Properties and Growth

The primary effort for the AOS tropospheric aerosol measurements require a baseline of aerosol data to permit the formulation of specifications and strategy for such a program. Most of this need is concentrated in the area of aerosol growth characteristics, spatial distribution and composition, under various environmental conditions and geographic locations. This requirement is similar to that described in Technology Developments 1 and 2, since sufficient data is needed to support the initial phases of the implementation program.

The state-of-the-art can be summarized by stating that there are areas where aerosol information is sketchy, particularly with regard to aerosol formation

and growth. Other areas of deficiency include knowledge of the effect of aerosols or radiative transfer and processes involving the interaction of aerosols with gaseous species. Due to the lack of remote sensing techniques, current global data on aerosol compositions are sparse; it is limited to the density measurements possible through in-situ techniques.

Projected advances, based on current and planned activities, indicate that a significant amount of modeling of physical and chemical characteristics of aerosols will take place prior to the critical date of 1985. An overall assessment, however, shows that at the present rate of advancement there is a low probability that the necessary baseline will be attained and therefore, a possible technology gap is anticipated.

Development 4 - Detailed Specification of Measurement Requirements

The Working Group on Tropospheric Program Planning set the foundation for the definition of the measurements, and Task 1 of this AOS Study translated these into measurement requirements. This is a continuing process that should undergo several iterations as the missions and systems are established more firmly. Although it constitutes an important scientific and engineering task, it does not require advancements in the state-of-the-art per se and, therefore, is not considered a technology requirement.

Technology Development 5 - Chemical Kinetics of Gaseous and Aerosol Species

Chemical kinetics determines species' lifetime and hence, spatial distribution of pollutants. The degree of certainty attributed to the rate constants are important here since they affect the lifetime estimates directly. Knoweldge of the regional winds, as well as other factors affecting transports, must be coupled with the chemical kinetics as inputs to needed 3-D models for pollutant dispersion. Estimates of residence times would then permit the determination of spatial-temporal scales needed for the measurements. A requirement timeframe of 1985 is estimated for the availability of this information.

The state-of-the-art is that data for some processes has an accuracy of approximately 30%, while others (e.g., aerosol chemical (kinetics) have uncertainty factors of 200% or more. Some laboratory effort is underway, for instance, Langley Research Center is conducting an investigation to establish

aerosol formation and growth processes, reaction mechanisms and rate data. Limited effort in various laboratories is being applied to reactions of gaseous pollutants.

Assuming the present rate of technological progress, we do not anticipate that a gap will exist for AOS implementation. It is recommended, however, that the specific needs of the Tropospheric Program be considered in all the chemical kinetics investigations, particularly during the next 5 years.

6.2.2 GENERAL SENSORS

This category of potential techonology advances relates to both passive or active sensing techniques and is not limited to the optical portion of the spectrum. In the matrix shown on Figure 6.2.2-1 it can be seen that all the items in this category represent technology advances. In the Mission Dependence Matrix in Figure 6.2.2-1 there are several enabling technologies, but the majority of the items constitute enhancing technologies with respect to the six missions for AOS. Three of these items relate to new mission techniques and will be treated jointly since there are no viable remote sensing techniques that can be discussed relative to these measurements. The last item, improved detector characteristics, can be seen to apply across the board in all missions; this is particularly true in the thermal infrared region of the spectrum and where cryogenic cooling will be necessary both for passive and active sensors.

Technology Developments 6,7,8 - New Sensing Techniques for Weak Trace Species Aerosol Size Distribution and Aerosol Composition

In reviewing the measurement needs from Task 1, it was determined that several of the measurements could not be addressed through remote sensing due to the lack of any sensing technique able to satisfy the mission requirements. The first of these relates to weak trace species such as OH, NO, and HNO_3 which are particularly important in the Tropospheric Research Program. The importance of OH, for instance, is due to the fact that it plays a central role in tropospheric photochemistry since it initiates the oxidation process of a large number of reduced species. This is illustrated in Figure 6.2.2-2 which was abstracted from a paper by Dr. Bill Chameides. The various processes in which OH plays a central role include fermentation, combustion, industrial volatization, and anthropogenic pollution. The possibility exists that passive sensors would never be able to measure OH because of its very low concentration, and an approach may be the inference of OH concentration

Enabling = ● Enhancing = 0

ADVANCEMENT	TECHNOLOGY		MISSION DEPENDENCE					
	YES	NO	1	2	3	4	5	6
6. NEW SENSING TECHNIQUES FOR OH AND OTHER WEAK SPECIES IN TROPOSPHERE	X			0	0	0	●	●
7. AEROSOL MEASUREMENTS OF SIZE DISTRIBUTION	X			0	0	0	0	●
8. AEROSOL MEASUREMENTS OF COMPOSITION	X			0	0	0	0	●
9. IMPROVED TEMPERATURE SOUNDER	X		0	0	●	0		0
10. CRYOGENIC COOLING OF SENSOR DETECTOR AND OPTICS	X			0	0	0	●	●
11. IMPROVED DETECTOR CHARACTERISTICS	X		0	0	0	0	0	0

Figure 6.2.2-1. Technologies Classification Matrix - General Sensors

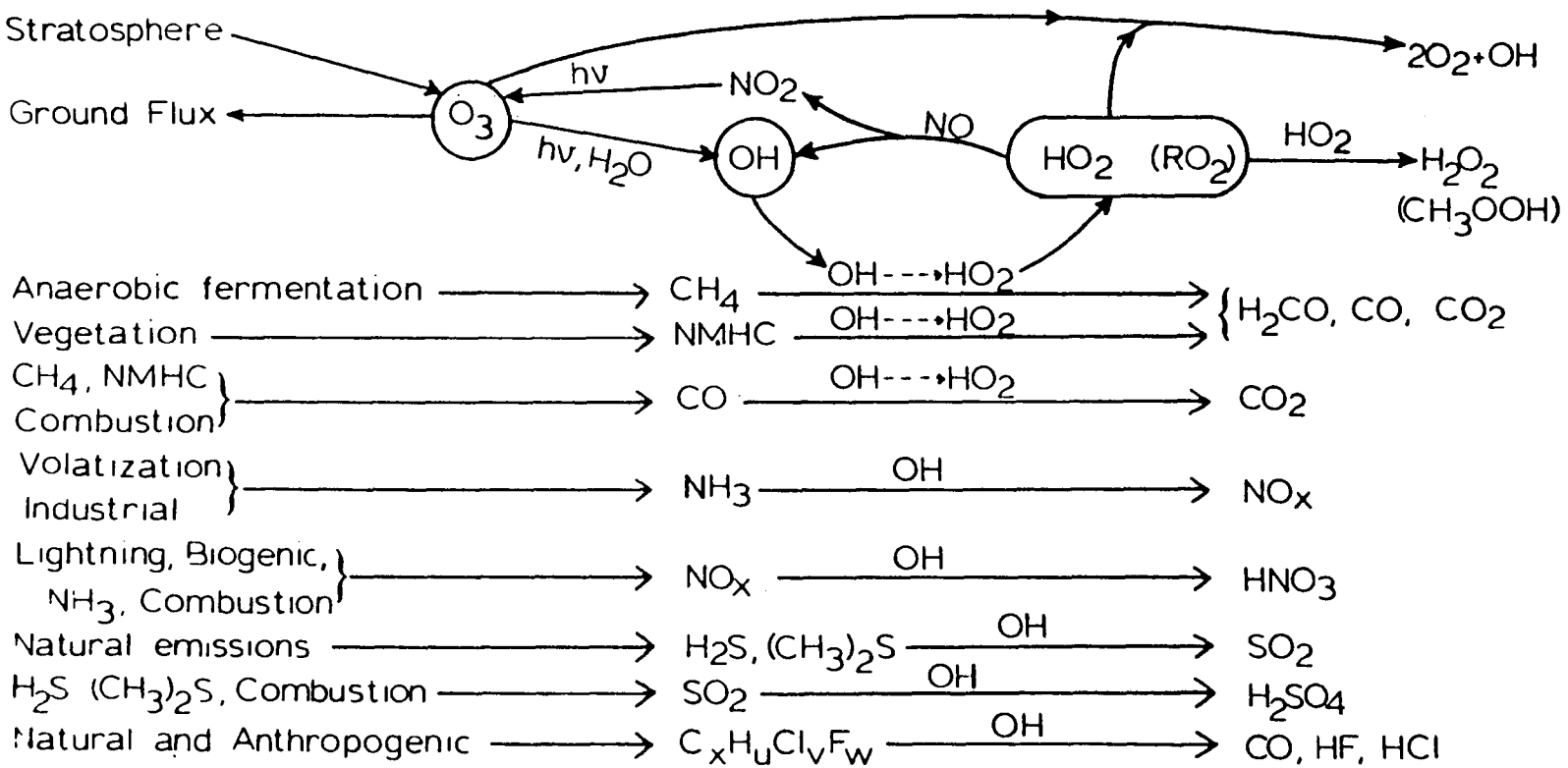

Source: Dr. W. L. Chameides, "Troposphere: Trace Gas Photochemistry and the Impact of Pollution" NASA-AIAA Meeting on Spectroscopy in Support of Atmospheric Measurements, Nov. 1980.

Figure 6.2.2-2. Global Tropospheric Photochemistry: OH Sources and Sinks

profile by its effects on the concentration of other reacting species which are easier to measure. This approach should be examined; however, it is felt that remote sensing techniques should not be completely disregarded in this respect; for instance, in the upper atmosphere OH measurements using submillimeter wave radiometry are showing great promise. The difficulties of applying submillimeter wave technology to this problem is recognized; however, it is given here as an example of new techniques which may be examined.

Detailed measurements of aerosol size distributions are needed in the range from 10^{-2} to 10^{-6} centimeters. Similarly, the composition of major material categories are desired. To date there are no remote sensing techniques that unambiguously determine these parameters, although some inference can be made using special atmospheric models and knowing the concentration ranges. As in the case of OH, it is perhaps the best approach to refine the inferred approaches; this does not preclude the search for independent measurement techniques both in the passive and in the active categories.

Current remote sensing of aerosol parameters from space is limited to solar aureole concentration profiles and measurements of size distribution, obtained through limb measurements in the upper troposphere. Active techniques have been used from aircraft and are planned for Shuttle sortie experiments.

In this needed sensor development, our assessment shows that there is a technology gap. The new technologies are needed in the timeframe of 1987 to support a 1989 possible launch of Mission 2.

Technology Development 9 - Improved Temperature Sounder

Certain measurements of trace species concentration require precision temperature sounding in the order of 0.2 degree accuracy and 1 kilometer vertical resolution. (Please refer to temperature sounder requirements in Section 3.3.8.) These stringent requirements only apply to those measurements which are very sensitive to temperature profile; therefore, the acceptance of less accurate temperature readings will simply add to the uncertainty in the concentration measurement. Thus, we consider the 0.2 degree accuracy as an ultimate goal, as well as the 1 kilometer vertical resolution.

The timeframe in which this technology is needed will be approximately 1988 to support a possible launch of Mission 3 in 1990. If a LIDAR technique to be augmented by precise temperature profile is required, it must be available by 1991 in order to support Mission 6 in 1993.

The state-of-the-art in temperature sounding shows that passive sensors yield accuracies from 1 to 2 K and a vertical resolution of 5 to 10 kilometers. The use of passive infrared heterodyne techniques are estimated to yield about 1 K accuracy and 2 kilometers resolution by 1985. Concerning active techniques, high resolution laser absorption measurements will permit 0.5 K accuracies by 1988.

The assessment shows that 0.1 K accuracy is not attainable with the present rate of development. We see a significant amount of effort in this decade in temperature sounding techniques, we believe a realistic goal for this decade will be approximately 0.5 K and 2 kilometers resolution.

Technology Development 10 - Cryogenic Cooling of Sensor Detectors and Optics

The sensitivity requirements of most of the tropospheric measurements require cryogenic cooling of detectors and fore-optics. The temperature ranges approximately from 18 K to 100 K, and cooling capability from 3 to 60 watts.

Key system performance parameters for this technology, in addition to cooling capability and temperature stability, are mission lifetime and system weight, both of which are of paramount importance when cryogenic systems are considered for spaceflight applications.

Based on the analyses performed for this Study, this technology is required by the 1988 timeframe in order to be capable of supporting a 1991 launch date for Mission 3.

Several space programs such as Gemini and Apollo, and some sub-orbital rocket flights, have demonstrated the use of super-critical and super-fluid helium for sensors requiring very low temperatures; however, the duration of instrument operation associated with these flights was very short when compared to currently planned spacecraft science missions. To meet specific science objectives, some of these missions will require continuous operation

of the instrument in order to obtain global coverage data on a daily basis over the mission lifetime (up to five years). A consequence of the long lifetime operational requirement is that the open cycle cryogenic systems will become prohibitively heavy and, therefore, should not be considered for these applications. Also, these systems must be vented to relieve excessive tank pressure buildup as a result of their change-of-state from cryogen to a gas. The venting of this gas may induce optics contamination and unwanted attitude perturbations to a spacecraft containing sensors with very sensitive optics and fine pointing requirements.

A desirable alternative to the open cycle system are rotary-reciprocating refrigerators (R^3) that are designed specifically for long-term space applications in which the primary system technology drivers requirements are low input power, extremely long intervals between maintenance, and long operating life. These refrigerators use a gas phase thermodynamic cycle and employ gas-bearing-supported reciprocating machinery. This technology has been pursued by the USAF since 1962 and has resulted in the development of an engineering model and a successful demonstration test of system performance.

The 1988 date appears feasible based on the data which is available for current cryogenic system concepts. It is feasible for this technology concept to be available at an earlier date, however, at potentially higher weight, volume and input power penalties necessary for practical spacecraft applications.

Substantial progress has been made regarding the various cycles referenced, e.g., Vullenmeir, Reversed-Brayton, Stirling, Gifford, McMahon, and Joule-Thompson. One R^3 concept uses a reversed Brayton thermodynamic cycle with two stages. An artist's rendering of the engineering test model developed for the R^3 concept is shown in Figure 6.2.2-3. Primary hardware elements are shown. Several key characteristics are tabulated below:

- Refrigeration Capacity — 1.5 watts at 12 K
40 watts at 60 K
- Heat Rejection Temperature — 323 K
- Input Power — 84-100 VDC
- Weight — 184 Kg

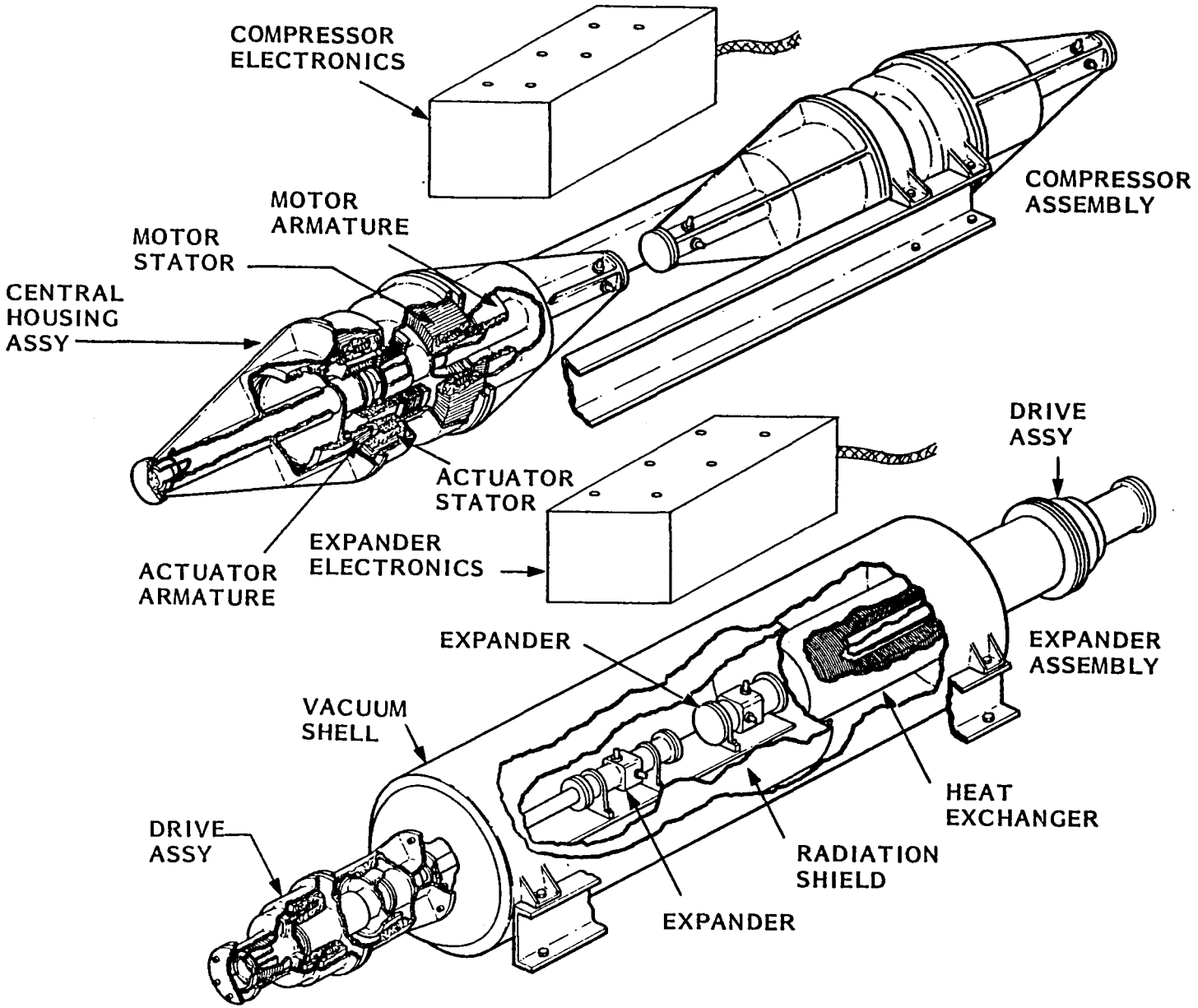

Figure 6.2.2-3. Example of Refrigeration System Under Development
(Rev. Brayton Cycle-AFDL)

- Dimensions

  - Compressor Assembly — 25.40 M dia. x 172.7 cm long
  - Expander Assembly — 30 cm dia. x 147.3 cm long
  - Electronics (2) — 12.7 cm x 22.2 cm x 49.3 cm

- Compressor Inlet Temperature — 635 K

Projected input power requirements as a function of compressor inlet temperature are shown in Figure 6.2.2-4 for this R^3 concept. Data points comparing the Engineering Test Model (ETM) weight and volume to curve data of expected performance of low temperature refrigerators are shown in Figure 6.2.2-5. The ETM data points fall within the projected data curves at about the same relative locations, which is to be expected if the curve data are to be considered representative of actual hardware configurations.

The projected capability for this technology development area is as shown on Table 6.2.2-1, based on the documented capabilities existing in 1978.

Table 6.2.2-1a. Typical Projection of Cooler Capabilities

	1978	1985	1995
Cooling Load (Watts)	1-10	1-10	1-10
Cycle Efficiency (%)	8	8	8
Design Life (Yrs)	0.6	6	10
Weight Per Watt	5	10	8
Typical Projection is Region		25 K	
Cooling Load (Watts)	0.5-2	0.5-2	0.5-2
Cycle Efficiency (%)	3	3	3
Design Life (Yrs)	0.6	6	10
Weight Per Watt	7	14	12

Capabilities for three time periods and two sensor temperature regions are included in this table. The primary capability improvement from 1978 to 1985 is characterized by a dramatic change in lifetime which is expected for future cryogenic systems. Improvements in capability between 1985 to 1995 are expected to come about in a further enhancement of design life with a corresponding reduction weight. These improvements are expected to be associated with cryogenic systems which use either the Vullenmeir cycle or revised Brayton (cycle) for low temperature sensor detectors and optics.

Availability of the needed technology by 1988 appears to be feasible. Earlier availability may be possible based on current developments at NASA-GSFC. The

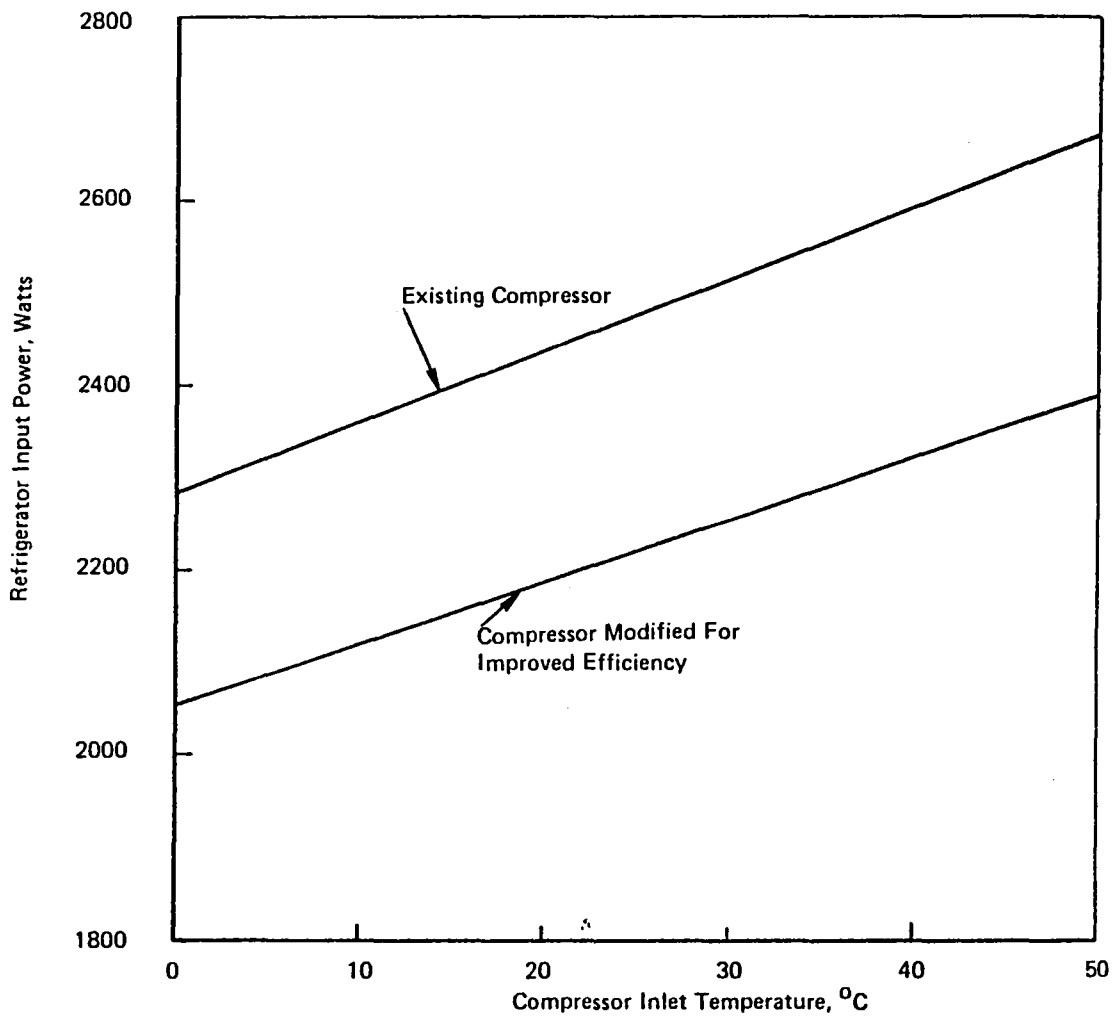

Figure 6.2.2-4. Projected Input Power as a Function of Compressor Inlet Temperature

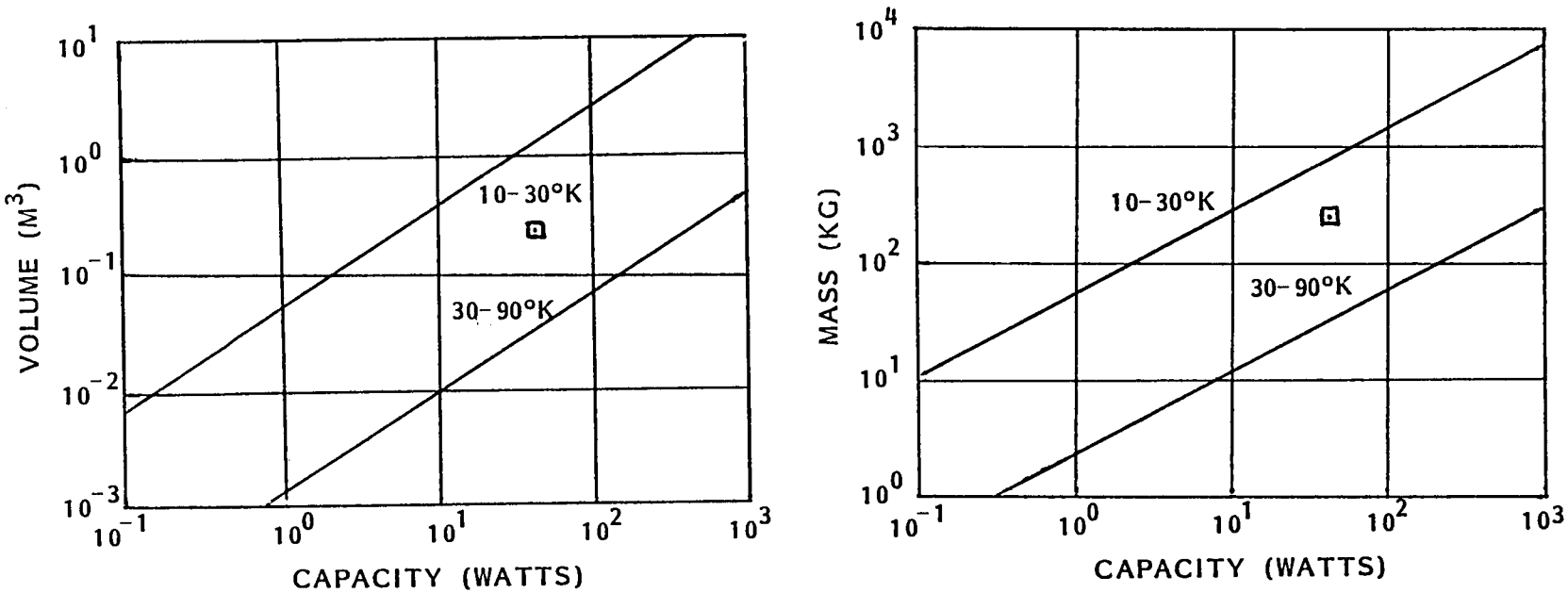

Figure 6.2.2-5. Volume and Mass of Low Temperature Refrigerators as a Function of Refrigeration Capacity

overall assessment is that there is the possibility that a technology gap exists relative to the availability of space qualified, low weight, efficient systems in the capacity range needed for the AOS Missions.

Technology Development 11 - Improvements in Detector Performance Characteristics

There are a number of improvements which can be made in current sensor systems which would significantly increase the system detectivety, D*, defined by:

$$D^* = \frac{A \Delta f}{NEP} \qquad \text{cm-Hz}^{1/2}/\text{watt}$$

where A = Detector area, cm^2

Δf = Post detection bandwidth, Hz

NEP = Noise equivalent power, watts

Detector D* is typically stated as a function of wavelength for a given detector field of view, background temperature, and radiation chopping frequency. The relative contribution of background radiation and internally generated detector noise to the NEP is not generally specified.

Improvements are being made in detector materials, geometry, and associated circuity which will enhance the performance of various detectors. Each measurement application has specific choices of detector characteristics, depending on the required spectral region, time response, etc. Table 6.2.2-2 shows a list of infrared detector types, their spectral band, time constant and detectivity (D*) for constant detector temperature.

Table 6.2.2-2. Typical Characteristics of Commerically Available Detectors (Note 3)

Type (Note 1)	Peak Wavelength Microns (Note 2)	Time Constant Sec.	Detectivity (D*) (10^{10} Cm $Hz^{1/2}$/Watt)
Pb S	3.0	$2\text{-}5 \times 10^{-3}$	15 - 25
In As	3.0	5×10^{-6}	51 - 61
Pb Se	5.0	$15\text{-}50 \times 10^{-6}$	1.5 - 3
In Sb	5.0	$20\text{-}200 \times 10^{-9}$	8 - 20
Ge Au	5.0	$1\text{-}100 \times 10^{-9}$	0.15 - 0.7
Pb Sn Te	10.0	$1\text{-}2 \times 10^{-6}$	1.5 - 3
Hg Cd Te	10.6-16	$0.2 - 0.8 \times 10^{-6}$	0.5 - 2

Notes:

1. Constant Temp. of 77 K assumed in all sensor types.
2. Wavelength shown is approximate maximum responsivity or detectivity.
3. Data from Santa Barbara Research (SBRC).

Decreasing the background temperature will generally decrease the NEP and hence increase the system D*. (Cryogenic systems for this purpose were discussed in Technology Development 10.) An upper limit to the value of D* for a system operating in a background limited mode is shown in Figure 5.2.2-6, which gives the background photon noise limited value of D* as a function of background temperature at wavelengths of 3, 5, and 10 microns. It is evident that D* can be significantly increased by cooling the temperature of components which contribute to the background temperature noise, if the internal detector noise is lower than the background photon noise. Due to practical considerations, the D* improvement may not be as great as indicated in Figure 6.2.2-6.

If the detector D* is less than the computed background limited D* for a particular sensor optical configuration, then the system D* will benefit from cooling of the sensor or detector fore-optics. The degree of cooling will depend on the wavelength region of operation. Passive radiative cooling may be sufficient under some circumstances, while an active cooling system may be necessary in other cases, is discussed in Technology Development 10.

In cases where the system NEP is not background limited, the measurement signal-to-noise ratio can be improved by increasing the sensor aperture. This generally requires major redesign of the sensor with scaling up in size of the optical components, rather than merely the installation of large fore-optics. In complex instruments, such as the interferometer spectrometer, this may entail significant technology advances. In all cases, the improvement in system signal-to-noise ratio must be weighted against the effort expended in redesign.

In general, the detector D* will benefit from the use of cryogenic detector cooling rather than passive radiative cooling, when detector operation in the thermal infrared spectral region (i.e., wavelength greater than 3 microns) is considered. The D* for Hg Cd Te detectors is increased by cooling to 77 K

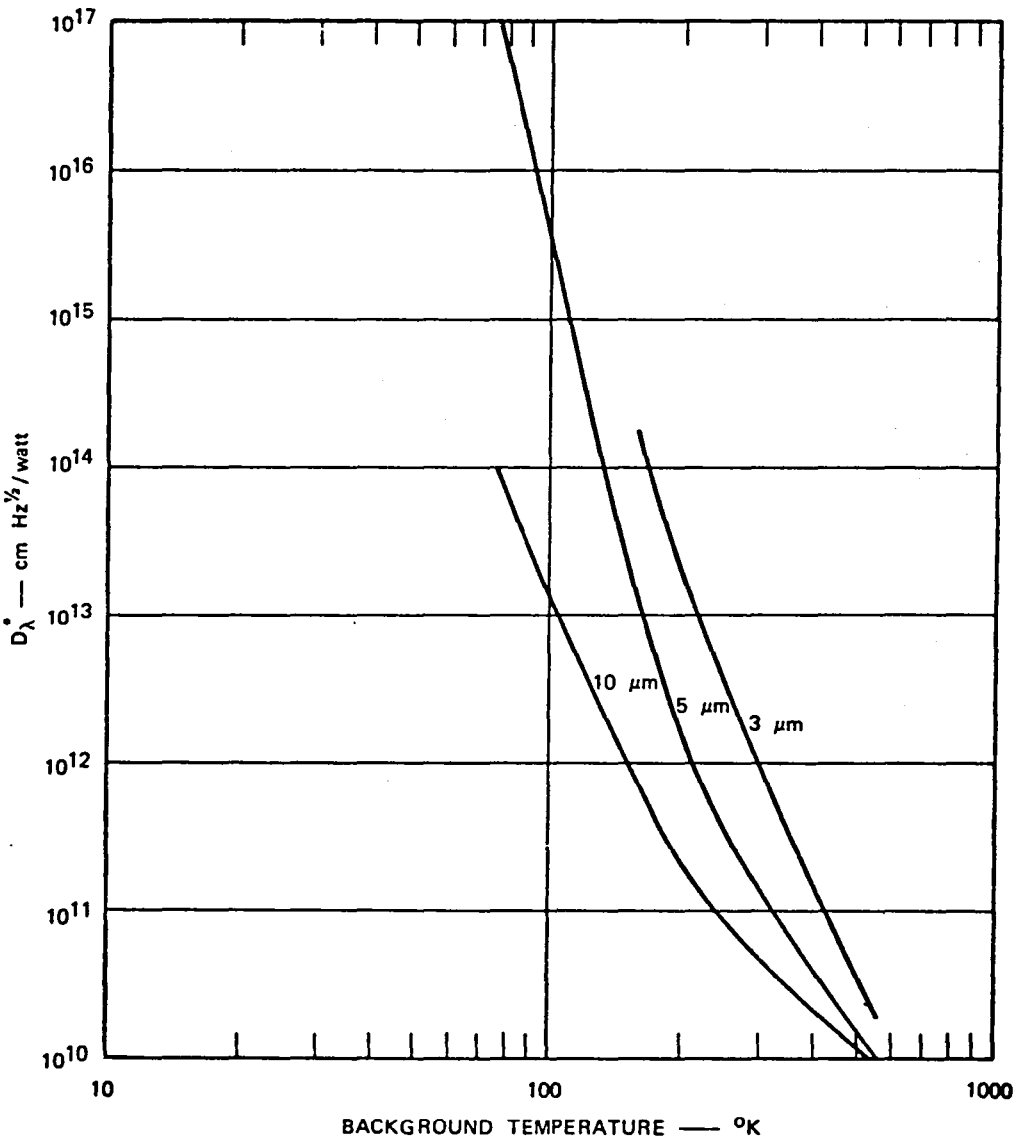

Figure 6.2.2-6. Detectivity as a Function of Background Temperature

by a factor of about 3 over what would be achieved with radiative cooling to 120 K.

An overall assessment of this technology of improving detector intrinsic characteristics during the next decade is that the performance will be progressively improved. No technology gap is foreseen, provided the current level of R&D is maintained in this area.

6.2.3 PASSIVE SENSORS

Many passive sensors have been designed and proposed for measuring parameters related to atmospheric quality, but few of these are specifically for tropospheric measurements from space. Tropospheric measurements are currently performed mostly from the ground and from airborne platforms; the problem arises with the large number of ground-based platforms needed for global coverage at grid spacings ranging from 100 to 200 km and at near daily frequencies. Space based measurements are the only practical approach, and passive techniques appear to be the next step in the technology progression.

To some degree, advancements in passive tropospheric sensors are likely to come as natural extensions of technology being developed for other purposes such as Earth resources, weather, or upper atmospheric research. Generally, this indirect technology transfer will not be sufficient to support a comprehensive program of tropospheric research in the next decade. What was determined in the AOS Study is that there are unique problems that need to be addressed concerning passive tropospheric measurements: one is the sensitivity problem, since we are unable to use the Sun as a direct source of radiant energy; the other is the amount of real estate that must be covered in a short time. The two are interrelated; for instance, closely spaced grids and wide orbital ground swaths mean short integration time, which affects sensitivity.

The potential technology advancements discussed in this section address a variety of sensors, and call for invention in areas where a possible approach has not been found. The sensitivity analysis necessary to prescribe a given sensor for a given measurement in each mission is a necessary step in the implementation of AOS; however, it is not within the scope of this Study. The analysis requires the prerequisite baseline technology outlined in Section

6.2.1, plus parametric modeling of the spectral irradiance incident on the sensor and a determination of the detectivity of the instrument under various geometric and environmental conditions (e.g., optics size, cooling temperature, interfering gases, etc.). This is necessary to determine what the limiting factors are in making a particular measurement. In some cases the measurement may be limited by uncertainties in atmospheric constituent and physical parameters which are involved in the data inversion process rather than system Noise Equipment Power (NEP). For these situations, striving for improvement in system detectivity would be non-productive. In other cases the measurement may benefit from design improvements which increase the sensor detectivity.

As a result of these considerations, we have endeavored to represent in this technology assessment a wide variety of generic passive sensors, deferring selection of the optimum set until the implementation phase enables the necessary sensitivity analyses and trades. Figure 6.2.3-1 shows the potential advancements in the Passive Sensors category, and their classification in terms of enabling or enhancing technologies.

Technology Development 12 - Linear and Two-Dimensional Detector Arrays

A spectroradiometer is needed in AOS to measure surface temperature, cloud cover, weather fronts and large patterns or features characteristic of pollution episodes. The spatial resolution requirements are comparatively gross, typically 7-10 km; while the accuracy requirements, typified by a 1 K ground surface temperature, are relatively stringent. The spectral region of interest is from the near-UV to the thermal IR, with multiple channels, each viewed within a narrow bandwidth.

A solid state push-broom sensor has been selected for this spectroradiometric application due to its projected higher reliability for long duration missions, and the capability of providing longer integration time. The availability of the technology, in terms of a flight-qualified design, will be needed in 1988 to support a possible 1990 launch. Initial testing in the early AOS missions could utilize a mechanically scanning spectroradiometer such as the Multispectral Scanner (MSS) or Thematic Mapper (TM).

The technology drivers are the performance characteristics of spectral response, detectivity, and uniformity of response from one array element to

Enabling = ● Enhancing = 0

ADVANCEMENT	TECHNOLOGY		MISSION DEPENDENCE					
	YES	NO	1	2	3	4	5	6
12. LINEAR AND TWO-DIMENSIONAL DETECTORS ARRAYS	X			0	0	0	●	0
13. PASSIVE TECHNIQUES FOR MEASURING AEROSOL BURDEN	X			●	0			
14. COUPLING OF DETECTOR ARRAYS WITH PASSIVE RADIOMETERS	X				0		●	
15. GAS FILTER RADIOMETERS	X			0	●		●	
16. INTERFEROMETRIC SPECTROMETERS	X		●	0	0			0
17. LASER HETERODYNE RADIOMETER	X				●		0	
18. PARTIAL SCAN INTERFEROMETERS	X			●	0			
19. SUB-MILLIMETER WAVE SENSORS	X							0

Figure 6.2.3-1. Technologies Classification Matrix - Passive Sensors

another. Unlike most Earth resources applications, the detector element spacing is not a driver here since the resolution elements measure a few kilometers rather than a few meters.

The arrays will benefit from on-going advances in focal plane technologies, employing CCD's or CID's integrated in the following modes: monolithic extrinsic, monolithic intrinsic, hybrid intrinsic and peudo hybrid. The state-of-the-art is well advanced in silicon detectors for near UV and the visible spectrum. The short wave IR (2.1 - 5.4 microns) is in development and has a limited performance with Hg Cd Tc and InSb detectors. The thermal IR region is less advanced, and employs primarily Hg Cd Te detectors. Table 6.2.3-1 shows the various types of materials that are under development in the infrared spectral region.

Current technology projections indicate continued advancement in all regions of the spectrum. Although IR technology, particularly in the thermal region, will lag there is high probability that the AOS needs can be filled by 1988.

Technology Development 13 - Passive Techniques for Measuring Aerosol Burden

The requirements relative to aerosol concentration distribution is to measure within a range of 10^{-1} to 10^{-5} particles per cm^3 with an accuracy of 20% and with a horizontal resolution of 100 kilometers and a vertical resolution of 2 kilometers. During our survey of potential sensors, no specific passive technique was found that could meet this requirement; however, it is felt that the LIDAR sensing will be able to address these requirements. It is important to find a passive technique to provide overall measurement of aerosol burden during the interim timeframe prior to availability of the LIDAR sensors. In addition, the availability of a imaging sensor will provide corroborative data to compare with that from the active optical measurement. Two sensors which were used to measure the concentration and vertical distribution of aerosol and ozone in the stratosphere, the preliminary aerosol monitor SAM, flown on Nimbus F by the University of Wyoming and the Stratospheric Aerosol & Gas Experiment on AEM. These instruments, however, use the solar extinction technique in the near infrared and visible spectral regions; therefore, it would not be applicable to tropospheric measurements only under very clear conditions for the upper level measurements. Another instrument which was designed, constructed, and tested in the AAFE Program was the photopolarimeter

Table 6.2.3-1. IR Focal Plane Detector Summary

MATERIAL	TYPE	TEMP (°K)	RESPONSE (μm)
PbS	PHOTOVOLTAIC HYBRID	150	1-3
InAsSb/InGaSb/GaSb	MONOLITHIC	100	2-8
InAsSb/InSb	MONOLITHIC	100	2-8
InAsSb/Si	HYBRID	100	2-8
InSb	MONOLITHIC CID & CCD	77	3-5.6
InSb/Si	HYBRID/CCD	77	3-5.6
$Hg_{.7}Cd_{.3}Te$	MONOLITHIC/CCD	40-77	2-5.5
$Hg_{.7}Cd_{.3}Te$/Si	HYBRID	40-77	2-5.4
$Hg_{.8}Cd_{.2}Te$	MONOLITHIC	40-77	8-18
$Hg_{.8}Cd_{.2}Te$/Si	HYBRID	40-77	8-18
PbSnTe/Si	HYBRID	40-77	8-14
PbSnTe	MONOLITHIC	40-77	8-14
Si (In)	MONOLITHIC	40	2-8
Si (Ga)	MONOLITHIC	18	8-16

which has been discussed previously in Section 3.3.6. While the measurement of the three Stokes Parameters is a well understood technique for measuring atmospheric turbidity, there are potential aspects to this development that make it a technology development candidate. One of these is the coupling of a multispectral linear array to the photopolarimeter, and the other is the determination of the inversion techniques for interpreting these observations in the nadir-looking mode in terms of aerosol burden measurements.

The technology development is required by 1986 in order to support a 1988 launch in the LARS I Mission 2. Although the photopolarimeter has flown in an aircraft, the technique has not been fully developed and requires considerable analysis and testing. The only other alternative to development of this sensor will be the use of the optical data, without the benefit of polarization separation, through the multispectral linear array and the determination of turbility through the appropriate inversion techniques. A preliminary analysis to determine the potential contribution of polarimetry in eliminating some of the ambiguities presented by the imaging data would be very useful in this respect. Since the development of the instrument is inactive and there are no plans for reactivation of the program, it is assumed that the technique will not be developed in time to support the AOS missions. It is concluded, therefore, that there might be a technology gap.

Technology Development 14 - Coupling of Linear and Two-Dimensional Detector Arrays With Passive Radiometers

Most of the radiometer and atmospheric sounders that are currently being developed involve nadir spot-sampling. This technique is not suitable for obtaining global coverage of 21 days or greater and relatively long integration time for tenuous species. To circumvent this difficulty, it would be necessary to sample off-nadir in a conical scan or a linear scan mode. There are two major disadvantages to off-nadir spot sampling. One is the necessity for positioning and stopping the scanning mirror of the instrument at each point; this presents alignment and vibratory problems; the other is the decrease in the integration time, proportional to the increase in the number of points that are scanned on each swath line. The approach that is suggested here is to use a linear array in a pushbroom mode with radiometers such as the gas-filter correlation radiometer for low Earth orbit missions, and a two-dimensional array operating in the stare mode for geosynchronous missions. The timeframe for development of this technology would be 1988 for

the pushbroom sensor in order to support a mission of LARS I prime in 1990, and 1989 for the two-dimensional array sensor to support a launch of the geosynchronous LARS in 1991.

Figure 6.2.3-2 shows a schematic of the pushbroom spectroradiometer for low Earth orbit and defines some of the characteristics of such a sensor. Figure 6.2.3-3 is schematic of the geosynchronous gas filter radiometer sensor. The latter is a version of the Monitoring of Air Pollution from Space (MAPS) sensor which is in an advanced stage of development at the NASA Langley Research Center. It differs from that sensor primarily in two respects, the optics are larger (objective optics diameter of 12 centimeters, nominal), and the detectors are two-dimensional arrays in several IR wavelengths (for several gaseous species). A radiometric correlation is made on a pixel-by-pixel basis between the radiation passing through the gas filter and that passing through the vacuum cell. In normal operation from geosynchronous orbit, the instrument will stare at a 6000 x 6000 segment of the Earth, after which the field of view will shift to another area and it will stare at that portion for a period of time measured in minutes or hours. The data from each pixel will be sampled frequently, nominally 15 samples per second. The correlated statistics will be accumulated on-board on a pixel-by-pixel basis so that the data can be compressed over longer periods of time. One of the problems that has been anticipated with this type of monitoring is the possibility of obscuration of each pixel due to cloud cover. To solve this problem, the approach that needs to be investigated is to use the mutispectral linear array sensor to set the criteria for cloud cover on each of the GGFR resolution elements so that those pixels that are cloud covered can be eliminated from the data during the period of obsculation. Since the spatial resolution of the multispectral linear array would be much finer than that of the GGFR, it will be possible to establish a threshold of cloud cover for each pixel based on the percentage of area covered by the clouds as well as the cloud thickness as determined radiometrically in the MLA.

In assessing the state-of-the-art we recognize that the solid state array technology is still under development, particularly in the infrared as specified in Technology Development 12 above. In addition, the gas filter radiometer technology is fairly well advanced, as typified by the MAPS sensor. The development that is lacking is the coupling of these two on-going

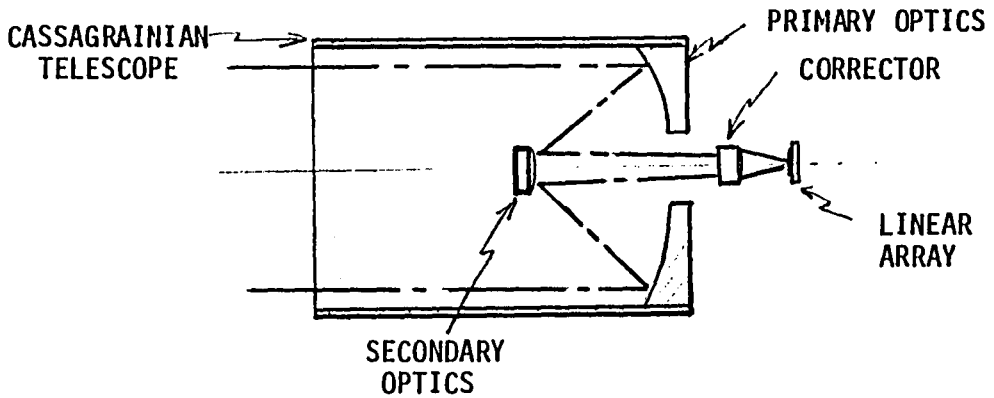

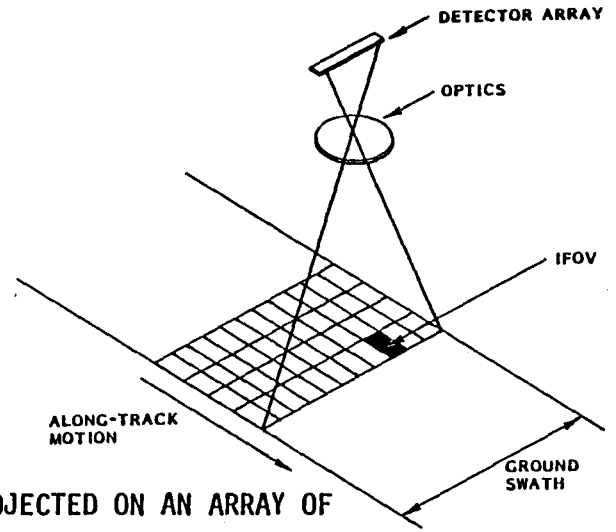

PRINCIPLE OF OPERATION: THE GROUND IMAGE ALONG A GROUND SWATH IS PROJECTED ON AN ARRAY OF SOLID STATE DETECTORS (E.G., PbS, HgCdTe, InAs, InSb). EACH DETECTOR ELEMENT CORRESPONDS TO A RESOLUTION ELEMENT IN THE CROSS-TRACK DIRECTION.

PERFORMANCE CHARACTERISTICS (CRYOGENICALLY COOLED DETECTORS)

SPATIAL RESOLUTION: A FUNCTION OF OPTICS AND DETECTOR SPACING (AOS REQUIREMENTS ARE ATTAINABLE)

SENSITIVITY:

DETECTOR MATERIAL	PEAK WAVELENGTH (MICRO-METER)	DETECTIVITY D* ($Cm/H_Z^{1/2}/W$) AT PEAK
InAS	3.3	3 X 10"
HgCdTe	12.0	10^{10}
InSb	5.3	10"

PHYSICAL CHARACTERISTICS:

DIMENSIONS: 0.35M. DIA X 1M. LONG

WEIGHT: 90 KG

POWER: 150 WATTS

Figure 6.2.3-2. Pushbroom Spectroradiometer

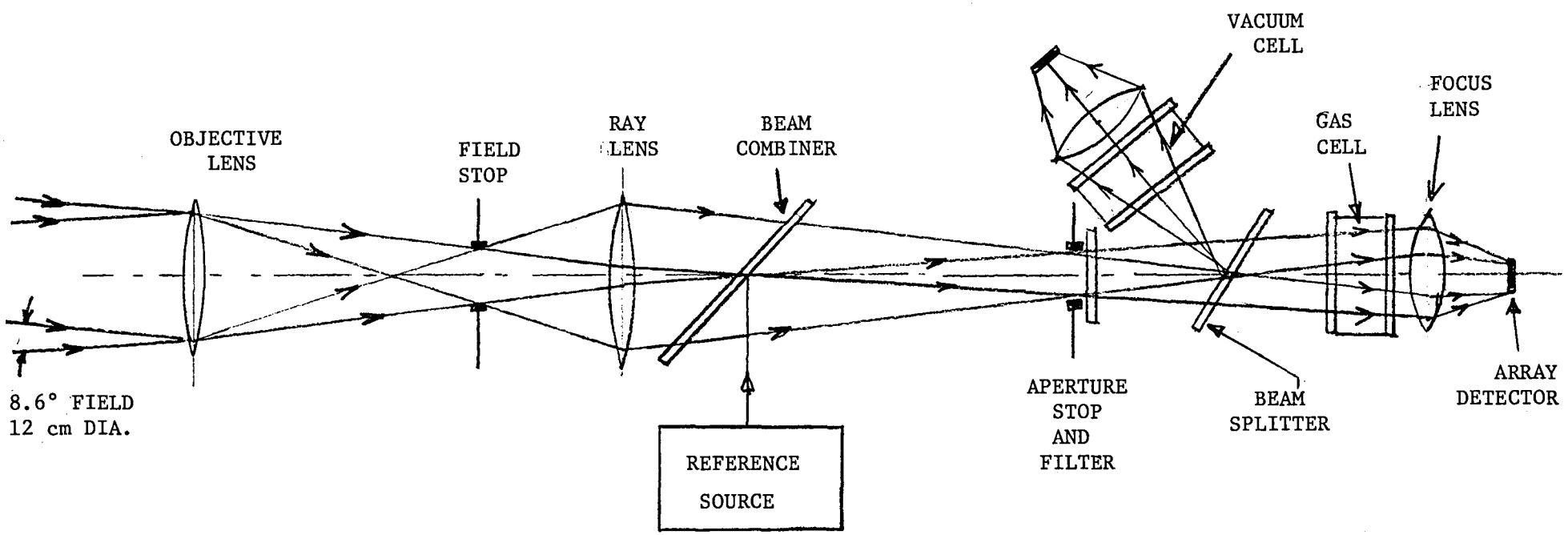

Figure 6.2.3-3. GGFR Sensor Schematic

technologies, since we do not see any current trend to indicate that this coupling technology will occur during the next decade. Assuming the present rate of development, it is unlikely that the coupling of these two technologies will occur before each of the individual elements of technology are developed and have been flown in space. A technology gap, therefore, will exist unless there are some parallel developments that will permit the coupling of linear arrays and two dimensional arrays to the radiometer sensors prior to the end of the decade.

Technology Development 15 - Gas Filter Radiometer

The Gas Filter Radiometer Technology needs to be improved in terms of the vertical resolution and accuracy in measurements of the troposphere. The goals for these measurements are 1 kilometer vertical resolution and 10% accuracy or better. The basic sensor has been described in Section 3.3.3 and its application with other multispectral linear arrays are discussed in Technology Development 14.

The timeframe for this requirement will be in 1987 to support a launch of Mission 2 in 1989. The data inversion relationships for the various trace species needs to be developed. Since the measurement needs specify that many trace gases should be measured simultaneously, it will be necessary to develop multiple pressure cells which can be alternately sampled during the course of an observational cycle. Improved signal balancing is required to permit mesurements of the weaker species. The present instruments have balanced stability of about 1 part in 10^4 of incident radiation. Lesser problems to be solved involve the spectral characteristics of the optical materials and coatings, component optical alignment, and polarization properties of the materials and coatings. The use of multiple gas cells with gases at various preset pressures should be investigated, particularly since this technique will improve the resolution of the vertical profile. Extensive use of common fore-optics, multiple detectors and dichoroic beam splitters will be used.

The state-of-the-art is typified by the monitoring of air pollution through satellites sensor (MAPS) in the non-thermal spectral region scheduled for the second Shuttle flight. The differential correlation radiometer offers promise for improved sensitivity and versatility of operation. The HALOE Sensor for solar limb measurements is in an advanced stage of development; however, it will not be useful in the tropospheric application.

The technology projection for this development indicates that vertical resolution in the order of 3-5 kilometer may be attainable, as well as accuracies in the neighborhood of 10%. For very faint species, it will not be possible to attain the 3-5 kilometer resolution and a one layer measurement will be more realistic. In view of these projections, a gap is foreseen relative to the vertical resolution sensitivity.

Technology Development 16 - Interferometric Spectrometer

The principal technology requirement for the Interferometric Spectrometer is high spectral resolution and signal to noise ratios. For passive sensing of the troposphere with an interfermetric spectrometer, the high spectral resolution is necessary to separate the spectral features of the gas species from those of the interfering species. The high resolution is also necessary for determination of spectral line shape which may be used to compare vertical concentration profiles of atmospheric constituents. The current development of flight instrumentation includes an interferometer with 0.02 cm^{-1} resolution in a solar occultation mode. Three main implications of nadir viewing are as follows:

1. For the tropospheric application, a nadir looking instrument is needed with a resolution of 0.01 cm^{-1}.

2. One of the technical challenges is the development of automated optical alignment systems for the interferometer in order to prevent degradation of system performance during the life of the mission.

3. Another technical challenge will be to develop a larger instrument with larger aperture, also the capability for cooling the detector on pre-optics for higher sensitivity.

The current state-of-the-art is typified by the JPL ATMOS Sensor, which is scheduled to fly on Spacelab in a solar occultation mode. There are no current plans for a cryogenically cooled, nadir looking instrument. The technology projection for this generic instrument is for continued improvement in the resolution and signal-to-noise ratio but operating in a limb mode. Unless there is significant impetus concerning the tropospheric research, it is not foreseen that a nadir looking instrument will be developed during this decade. A technology gap exists, and a decision concerning whether or not an interfermetric survey sensor will be useful would be required prior to 1983. Table 6.2.4-3 shows the ATMOS instrument design characteristics, to illustrate

TABLE 6.2.3-2. CHARACTERISTICS OF ATMOS INSTRUMENT

PARAMETER	ATMOS DESIGN
Instrument Type	Fourier Transform Spectrometer Rapid Scan, Tilt Compensated
Spectral Characteristics	
- Wavelength Coverage	2 to 16μm (5000 to 625 cm^{-1})
- Resolution	0.01 cm^{-1} (Unapodized)
- Optical Path Difference	50 cm
- Wavelength Precision	0.005 cm^{-1}
Spatial Characteristics	
- Spatial Resolution	2 km (Maximum)
- Sensor FOV	1,2 or 4 mr Selectable
- Scan Time	1s per 50cm OPD Interferogram (Single Sided) 2 s PER 50 cm OPD Interferogram (Double Sided)
- Off Axis Rejection	<1% Scatter <21% (diffraction)
Sun Tracker Characteristics	
- Accuracy	± 0.38 mr (2σ)
- Stability	± 0.06 mr (1σ)
- Range	± 180° Azimuth 0 to + 84° Elevation
- Pointing Verification	16 mm Photo Camera
Sensor Efficiency Characteristics	
- Geometric Throughput	3.58E - 5cm^2 sr (1 mr FOV)
- System Transmissivity	9.5%
- Modulation Efficiency	≥ 0.8
- Beamsplitter Efficiency	≥ 0.9 (4 RT)
Interferometer Characterisitics	
- Type	Double Pass, Tilt Compensated Michelson
- Beamsplitter Substrate	KBr
- Total Optical Path Displacement	100cm (-50 to + 50cm)
- Scan Stability	<0.1% pk-pk Velocity Error
- Scan Time	2.2 ± 0.1 s
- Scan Direction	Bidirectional

the state-of-the-art in fourier transform sensor technology. Other precursors to the AOS Generic Sensor are the MARK II Interferometer, the IRIS Voyager Sensor, and the HIRIS Sensor for sounding rockets.

Technology Development 17 - Laser Heterodyne Spectrometer

The Heterodyne Spectrometer is an important instrument in tropospheric research, particularly in measurements requiring very high spectral resolution. An important application of the laser heterodyne spectrometer will be in the determination of temperature profile, in a temperature sounding mode. The principle of operation of this instrument was described in Section 3.3.4. The input energy is mixed with a laser local oscillator, thus

producing a band limited heterodyne signal. In this mixing process the incoming radiation is converted down to RF frequencies where conventional intermediate frequency filtering circuits can be used to handle the band limited signal. Use of a tunable diode laser is particularly useful in this technique. Spectral resolutions of 1.3×10^{-4} cm has been reported by Peyton, using an IF filter with a bandwidth of 2 megahertz and a CO_2 laser as a local oscillator. The ultimate limit in spectral resolution seems to reside in the stability of the laser local oscillator.

The technology challenges presented for tropospheric research include the development of tunable IR lasers such as CO and CO_2 lasers with high frequency stability. From a sensor system point of view it will be important to solve the integration-time problem which arises when viewing species with weak spectral lines.

The state-of-the-art is typified by the LHS sensor which was specifically designed for stratospheric measurements in the spectral region of 3 to 30 microns. A tropospheric version of this instrument would require significant modification. For instance, wideband array photo-mixers would be required as well as tuneable local oscillators. The laser will require additional power for the tropospheric application, due to the required signal-to-noise ratio. Depending on the accommodation requirements in the spacecraft, a repackaging will be necessary using integrated optics. One important aspect of this heterodyne technology is that it will benefit not only the passive instrument development, but also the LIDAR techniques.

The timeframe for the technology of this sensor is 1987 to support a 1989 launch of Mission 2. Our assessment shows that the technology for tropospheric missions may not be achieved in the required timeframe unless additional effort is expended in designing a specific instrument for trace species in the troposphere, i.e., a nadir viewing sensor.

Four specific technology needs are associated with this instrument, as discussed below.

Technology Development 18 - Partial Scan Interferometer

The partial scan inteferometer has been described in Section 3.3.2.

First, the utility of a partial scan interferometer would be enhanced by the development of the capability to scan more than one optical path region of the interferogram either on command or in some pre-programmed sequence. In the AOS application, this capability will permit the measurement of several species with maximized signal-to-noise ratio, since most species will exhibit maximum signal at different interferogram delays.

Improved data inversion algorithms will be required for the various species measured with the partial scan interferometer. Inputs to this algorithm would include not only the fourier transform of the partial scan interferometer, but perhaps other ancillary information such as temperature, profile, or ground temperature and emission characteristics.

As with the interferometric spectrometer discussed above, the partial scan interferometer would benefit from the development of automatic optical alignment systems for the interferometer mirrors.

A technology gap is foreseen in this development due to the lack of a specific development program for the foreseeable future.

Technology Development 19 - Submillimeter Wave Sensors

Section 3.3.5 described the potential role of submillimeter heterodyne radiometers in tropospheric research. There are many limitations in the use of the submillimeter radiometers in the lower troposphere, however, we have included this as a potential technology requirement considering the possibility of making measurements on species which have weak spectral lines and encounter large amounts of interference in the ultraviolet, visible, and infrared spectra. As mentioned previously, it is unlikely that the measurements can penetrate below 4 kilometers.

The state-of-the-art of sub-millimeter radiometers is characterized by ground based laboratory measurement of mesopheric CO, O_3, H_2O, and stratospheric O_2. Aircraft based measurements are being made of stratospheric O_3, mesopheric H_2O, stratospheric Cl O (radical), N_2O, and upper stratospheric temperature.

The technology projection shows continued ground and aircraft based research in the millimeter spectrum and measuring techniques satellite-based tests are scheduled for Cl O, water vapor, and ozone as well as temperature sounding of the stratosphere. No significant research has been scheduled concerning tropospheric measurement.

Concerning the determination of whether a technology gap exists in the submillimeter wave sensors, it is too early to make this determination based on what is known about the capability of submillimeter technology in the troposphere. It is recommended that analysis and laboratory tests be conducted to determine the feasibility of making upper tropospheric measurements using this technique.

6.2.4 ACTIVE SENSORS

Figure 6.2.4-1 shows a listing of the six potential technology advancements related to active sensors, and the technology classification matrix identifying the enabling and enhancing technologies. Items No. 20, 21, 24 and 25, which were classified as technology advances (beyond current state-of-the-art) are also enabling technologies relative to Mission 6, which employs LIDAR. Due to the developmental nature of Mission 4, the four items identified above are enhancing to that Shuttle sortie mission. It is judged that Items 23 and 24 advancements can be obtained via good engineering usage of available technology.

Technology Development 20 - Development of Excimer Lasers

The UV region of the spectrum is suitable for measuring the concentration of certain species such as NO and O_3. Excimer lasers can be used in these applications and consist of pulsed gas lasers that utilize an active medium of halogen and rare gas. Lasing occurs when excimer molecules, which only exist in the electronically excited state, return to the ground state and dissociate into single atoms.

Requirements for excimer lasers on AOS emcompass UV wavelengths up to 350nm, energy ouput up to 10 J, pulse frequency up to 15 Hz, and linewidth less than 5 angstrom. The state-of-the art is characterized by laboratory work and limited availability of commercial lasers which meet the above specifications of wavelength region, pulse frequency and line-width. Laser energy levels and

Enabling = ● Enhancing = 0

ADVANCEMENT	TECHNOLOGY		MISSION DEPENDENCE					
	YES	NO	1	2	3	4	5	6
20. DEVELOPMENT OF EXCIMER LASERS	X					0		●
21. CO AND CO_2 LASERS FOR LIDAR	X					0		●
22. HIGH COOLING RATES FOR SPACEBORNE LASERS		X						
23. SCANNING MECHANISMS FOR LARGE LASER TELESCOPES		X						
24. DIFFERENTIAL ABSORPTION LIDAR FOR TROPOSPHERIC MEASUREMENTS	X					0		●
25. WIND MEASUREMENTS USING LIDAR	X					0		●

Figure 6.2.4-1. Technologies Classification Matrix - Active Sensors

efficiencies need to be improved, and long-life systems need to be space-qualified for the AOS application. Tunability, which is currently limited to a multi-specie region of a few angstroms, should be expanded to a wider range, to enhance multi-specie applications using a common laser.

The technology projection indicates that an increasing demand for excimer lasers in many applicatons including remote sensing, will result in more rapid advancement during the decade of the 80's. No technology gap is anticipated in meeting a 1990 technology availability timeframe. A technology requirement exists for the space qualification of these devices in the second half of the decade.

Technology Development 21 - CO And CO_2 Lasers For LIDAR Sensors

The improved region is of primary importance in LIDAR measurement of tropospheric species and wind vectors. Absorption lines of trace species are abundant in the spectral region near 10 and 5 microns (fundamental and double modes) where high efficiency CO and CO_2 lasers operate. Due to the operational requirements of the AOS mission, the laser should be able to be used at multiple frequencies, simultaneously. This will be particularly useful in the differential absorption (DIAL) mode, where measurements are made both centered on a line and "off-line". The nominal AOS requirments for a dual laser in the IR region are as follows:

Wavelength:	9-11 microns 4.5 - 5.5 micron, doubled
Energy:	5-15 Joules per pulse
Tunability:	over the whole 9-11 microns spectrum
Pulse duration:	0.01 to 6 microseconds
Bandwidth:	220 kHz (transform limited)
Life:	Compatible with five year mission
Efficiency goal:	10%

This technology capability is required in 1991 to support a 1993 launch. The state-of-the art is characterized by the availability of an extensive variety of tunable lasers, with energy levels, pulse and bandwidth requirements well within the AOS requirements. Figure 6.2.4-2 illustrates the many wavelengths

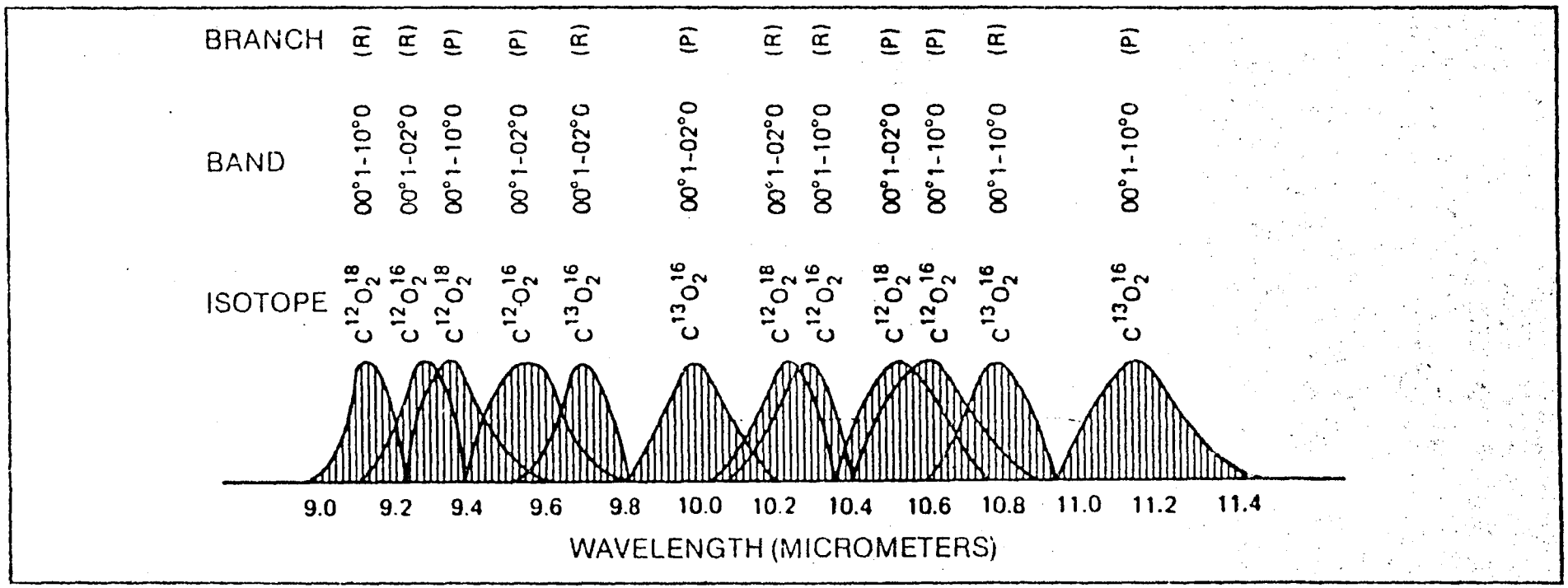

Wavelengths available from various isotopes of CO_2. Gain versus wavelength, normalized for each branch to the highest gain transition within that branch. Within each branch are 10–20 rotational transitions on which the laser may be operated.

Figure 6.2.4-2. Tunable CO_2 Laser Spectral Region

available within various isotopes of CO_2. A significant amount of technology development remains, particularly in the following areas:

1. Increasing laser life. One of the main problems here is the gas leakage and clean-up, which require large amounts of gas storage and gas replenishing systems, using gas spectrometers to measure gas deficiencies during long-term operation.

2. Elimination of the safety hazard in the use of CO lasers due to the formation of solid ozone.

3. Maturing of the frequency doubling technique, which permits operation in the 4.5-5.5 micron region of the IR Spectrum.

4. Maturing of the multi-wavelength technology using a single laser; this technology is now emerging from the laboratory stage.

5. Solution ot the deterioration problem in the foil separating the electron gas from the laser gas. Possible solutions are automatic replacement or development of new foil material.

6. Space qualification of the EB exicted laser, which uses a 120 KV power supply.

Based on present trends we believe that the space developments will concentrate on CO_2 lasers, due to the solid ozone safety problem. Laser characteristics will meet AOS requirements in all areas with the possible exception of the laser life for long duration missions. Development of a long life laser system for a five year mission can not be effected independently from overall system considerations such as gas storage and flow system geometry and location, vibratory and acoustically induced stress during launch, and interaction with the host spacecraft and the associated thermal control system necessary to dissipate the laser heat. Analytical and experimental simulations of various complete LIDAR System approaches will be necessary to insure the reliability of the system.

Technology Development 22-23 - High Cooling Rates for Spaceborne Lasers and Scanning Mechanisms for Large Laser Telescopes

These two developments have been considered engineering developments and do not involve an advancement in the state-of-the-art. The removal of large amounts of heat will constitute a challenging design problem, but it can be solved with present day technology. Regarding the problem of scanning mechanisms, the most difficult one will be the rotating mirror for both the species measurement and wind measurements. It has been determined that a constantly rotating mirror would be preferable to an oscillating motion which

would introduce disturbance accelerations on the delicate optical system. There are technology aspects regarding these two developments, but only on an overall system basis, and these are covered in Technology Development 35.

Technology Development 24 - Differential Absorption Lidar for Tropospheric Measurements

The DIAL technique has been described in Section 3.3.9. Higher sensitivity measurements requiring high vertical resolution (in the order of 1 Km) need heterodyning techniques in order to attain maximum differentiation between the on-line and the off-line measurements. Sensitivity analysis of DIAL heterodyne systems have been performed by NASA Langley Research Center scientists, namely, P. Brockman and Dr. Robert Hess, using laser characteristics that are considered within the state-of-the-art and factoring in the fixed random coherent noise. The analysis results show that satisfactory space-based detection of trace gases is feasible, as exemplified by the analytical simulations of Shuttle detection of ozone, water vapor and ammonia using the Shuttle evolutionary LIDAR concepts.

The main technology challenges in the DIAL technique are associated with the laser. This has been treated in the Technology Development 20 and 21, above. We recommend continued analytical and field testing on all tropospheric trace gases, as identified in the measurement requirements.

Technology Development 25 - Wind Measurements Using Lidar

The results of the WINDSAT Study performed by Lockheed in behalf of NOAA/USAF-SD summarize the technology development requirements necessary for the measurement of wind vectors. The final results of that Study identified the following items as being developmental requirements:

1. The optics, including the 1.25 meter primary telescope and the secondary mirror control system.
2. The laser frequency control including the chirp problem, the determination of parameters, solution of high voltage problems, and the attainment of high laser efficiency.
3. Signal and data processor.
4. Focal plane mixing efficiency.

5. Total system, proof of principle. The recommended demonstrations include the demonstration of performance levels with a full size engineering model; development of space-qualifiable electrical elements; the demonstration of a lag angle compensation using agile mirror and simulated link; implementation of the control system; and demonstration of the mixing efficiency as a function of WINDSAT parameters using calibrated heterodyne receiver.

6.2.5 COMMAND AND DATA HANDLING TECHNOLOGY

Figure 6.2.5-1 lists the items pertinent to the Command and Data Handling System which are potential technology advancement requirements, as previously identified in Section 5.3. The items in Figure 6.2.5-1 with the exception of No. 27 and No. 30 are related to advancements in technology; however, as indicated by the symbols for mission dependence, none of them constitutes an enabling technology. Their role in enhancement ranges from permitting more cost-effective approaches such as greater amounts of on-board processing, or lowering costs through improved efficiency.

Technology Development 26 - On-Board Processors for "Smart Sensors"

It is estimated that on-board processors which are of a general purpose nature would require of the order of 2 to 4 million operations per second for AOS. Present space qualified general purpose machines perform on the order of 500,000 operations per second. The major factors to be overcome are weight, size, and power as well as all other aspects of space qualification. It is anticipated that in the future on-board processing requiring high computational powers will be performed by special purpose machines. For example, the Massively Parallel Processor being developed under the NEEDS Program. It is expected that space-qualified general purpose machines capabilities will increase rather slowly. DoD is starting the development of a Military Computer Family which will be a fully militarized minicomputer capable of 3 million operations per second by the 1986 timeframe. It is reasonable to expect that this computer will be space-qualifiable by the 1989 timeframe required for AOS.

Technology Development 27 - Earth Curvature Distortion Correction

This advancement deals with optics fabrication and is not considered a technology improvement.

Enabling = ● Enhancing = 0

ADVANCEMENT	TECHNOLOGY		MISSION DEPENDENCE					
	YES	NO	1	2	3	4	5	6
26. ON-BOARD DATA PROCESSING FOR "SMART SENSORS"	X				0	0	0	0
27. ON-BOARD EARTH-CURVATURE DISTORTION CORRECTION		X			0	0	0	0
28. RANDOM ACCESS MEMORIES FOR ON-BOARD PROCESSING	X				0	0	0	0
29. SOLID-STATE STORAGE DEVICES IN PLACE OF TAPE RECORDERS	X			0	0	0	0	0
30. REDUCTION OF BIT-ERROR RATES ON TRANSMITTED DATA		X		0	0		0	0
31. INFORMATION EXTRACTION ALGORITHMS	X			0	0	0	0	0

Figure 6.2.5-1. Technologies Classification Matrix - Command and Data Handling

Technology Development 28 - Random Access Memories for On-Board Processing

This item identifies the technology development aspects associated with random access memories, which are an important adjunct to performing on-board processing. The present state-of-the-art for space-qualified memories is 4 kilobits per chip. The AOS requirement would be 10^8 to 10^9 bits of total memory. The technology projection is based on two separate approaches. The first considers Moore's Law which predicts that memory density will double each year until 1980, then will double every two years. On this basis, ground memories will reach over 1 megabit per chip by the 1990 timeframe. Moore's Law does not apply to space-qualified memories; however, previous history indicates that space-qualified semiconductor devices (those which can be space-qualified) tend to lag ground semiconductor devices by two to six years. Using four years as the average we anticipate 256 kilobits per chip to be available in space-qualified configuration by 1990. A 10^9 bits memory would thus require 4,000 chips which, although a high number, is not out of reach. The major problem will be that power consumption will be excessive since, in general, random access memories are always drawing operating power. The second approach was a literature search as shown in Table 6.2.5-1 which predicts capabilities for various timeframes in the area of random access memories as well as ROMS and magnetic bubbles. There is good agreement with the predictions derived from the application of Moore's Law.

TABLE 6.2.5-1. RAM AND ROM BUBBLE MEMORY PERFORMANCE

Memory type	Max. capacity/(bits)	Typical access time (ns)	Typical power dissipation (mW)	Availability	Next density improvement (bits) (year)
Dynamic RAMS	64 k	120	300/20	Limited production	256 k (1983)
ROMS	128 k	80 to 2000 (depending on technology)	300/40	Sampling to stock, depending on technology and capacity	256 k (1981)
Magnetic bubbles	1 M	10 to 40 ms	800/0*	Sampling to stock, depending on capacity	4 M (1983)

*Not including support circuits

Technology Development 29 - Solid State Storage Devices in Phase of Tape Recorders

The AOS requirement would be for memories with a capacity of 10^9 to 10^{10} bits. Present state-of-the-art are tape recorders which are capable of storing 10^{10} bits. NASA has been developing a magnetic bubble memory with a capacity of 10^7 bits. Using the same approach for technology projection as we used for the random access memories we predict that space-qualified magnetic bubbles memories of the order of 4 to 8 megabits per chip will be available in the 1990 timeframe. Since only the chip being addressed and read need be powered, we do not face the power problem here that we face with random access memory chips.

Figure 6.2.5-2 shows the capability of storage capacity for magnetic and optical discs. The present state-of-the-art is 2×10^{10} bits per disc. Projections indicate this will increase to 2×10^{11} bits per disk within the next five years. Actual results being obtained in the laboratories indicate that this capacity will probably be reached sooner than predicted.

Technology Development 30 - Reduction in Bit Error Rates on Transmitted Data

This item can be resolved through adjustments in transmitted power and/or use of error control codes.

Technology Development 31 - Information Extraction Algorithms

In the past many of the missions flown were experimental, and algorithms were developed after launch of the spacecraft, and in most cases continued to be developed during the flight and data collection periods. On the AOS Program it is anticipated that such algorithm development activities will occur during the early flights. It is imperative, however, that the algorithms be fully developed prior to the start of design for Missions 5 and 6, which represent an operational system. This is particularly important to the proper determination of the processes to be performed on-board and the development of the processors to perform these functions. It is not intended here to disallow further algorithm refinement and improvement but to emphasize that these activities will take place off-line and will not impact the design and the initial operation of the system. It is important to recognize that processes performed on-board the spacecraft must be performed in real time if they are to reap the benefits of on-board processing. This usually requires that the algorithms be somewhat modified in the detailed procedure rather than

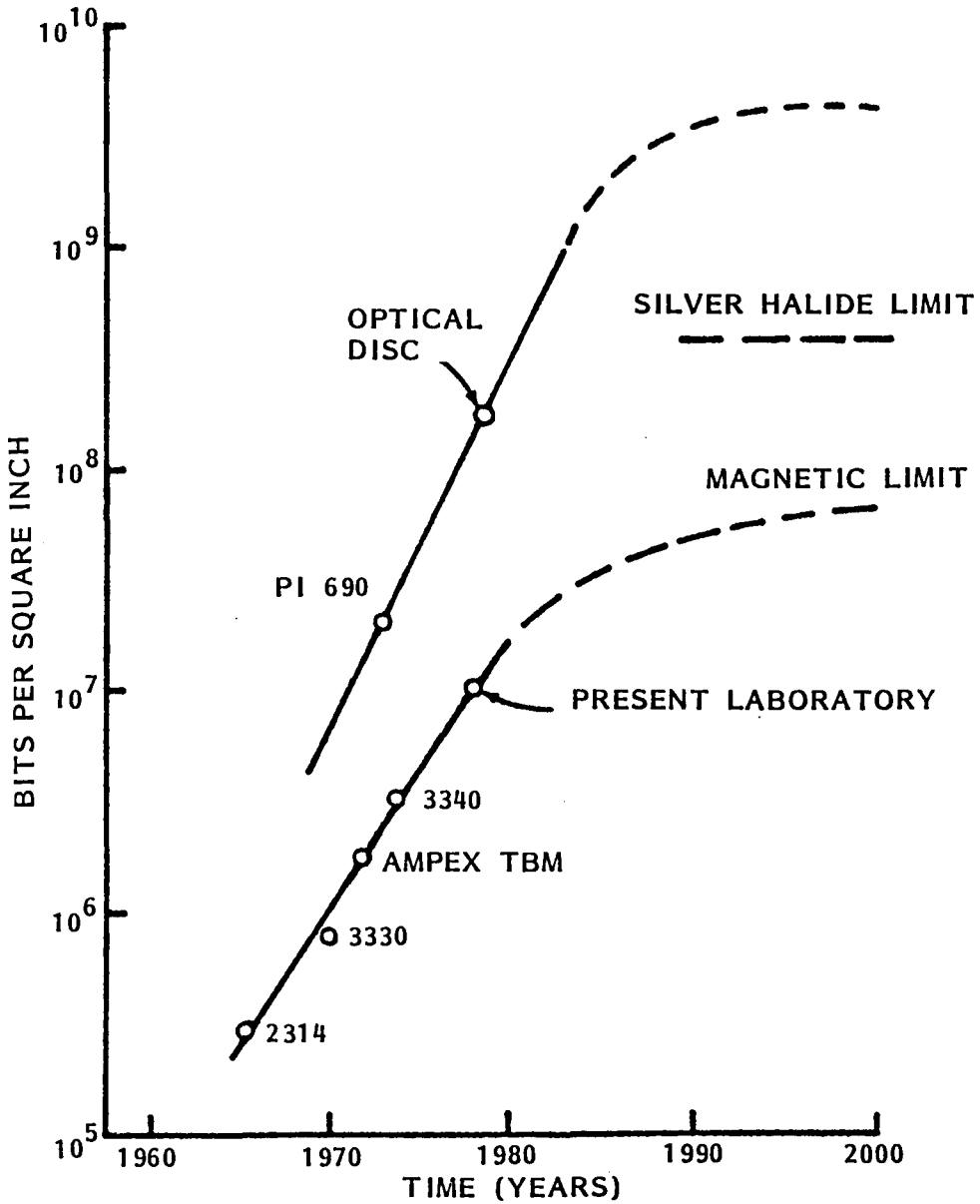

Figure 6.2.5-2. Recording Density vs. Time for Magnetic and Optical Technologies

in the function performed to accommodate the requirements of real time processing; i.e., the finalization of the algorithms and the development of the data system must proceed in an interactive fashion.

6.2.6 SPACECRAFT SYSTEM

Figure 6.2.6-1 shows a matrix of the advancements that are required for the spacecraft to host the various sensor payload for the various missions. The analysis showed that Items 32, 33, and 34, which deal with electrical power, structure, and the vibratory environment in the spacecraft are engineering advances which do not require advancements in the state-of-the-art. Therefore, the primary requirement in this category, and the one which constitutes a technology development is the large spacecraft system technology. This requirement is pertinent to three specific missions, the LARS Flight on Mission 3, the Geosynchronous LARS on Mission 5, and the Advanced LARS System on Mission 6. The large spacecraft systems technology is enhancing with respect to Missions 3 and 5, and enabling for Mission 6.

Advancement 32 - Multikilowatt Power Supply and Thermal Control

This advancement is needed for Mission 6 as described in Section 4.6, and whose requirements are defined in Section 5.1. The power requirements for the mission depend heavily on the laser system for the LIDAR. In the single telescope payload option described in Section 5.1, the power requirement will be 12.3 kw; for the two telescope payload options the requirement is 17.7 kw. The power supply capabilities for the timeframe of the 1990's will probably exceed the above mentioned requirements, particularly in light of the development of the power module which nominally will be capable of 25 kw. It will be important, however, to develop efficient and reliable power supplies for long duration missions such as Mission 6. In many cases, the design will not necessitate the use of a complete power module and will be self contained within the spacecraft. This development, which is primarily an engineering one, we believe will be attained within the timeframe of the mission and will not constitute a developmental gap.

Advancement 33 - Large Payload Accommodation in a Single Shuttle Launch

Payload 6 requires a large volume in the Shuttle Cargo Bay in order to accommodate the large instrument complement that is carried for that mission. In a cursory accommodation layout of the spacecraft equipment and instrument payload (Figure 5.2-1), an envelope of 13.2 meters by 4.3 meters in diameter

Enabling = ● Enhancing = 0

ADVANCEMENT	TECHNOLOGY		MISSION DEPENDENCE					
	YES	NO	1	2	3	4	5	6
32. MULTI-KW POWER SUPPLY AND THERMAL CONTROL		X						
33. LARGE P/L ACCOMMODATION IN SINGLE SHUTTLE LAUNCH		X						
34. VIBRATORY MISALIGNMENT OF SENSORS DUE TO LARGE SCANNING MIRRORS		X						
35. LARGE SPACECRAFT SYSTEMS TECHNOLOGY	X				0		0	●

Figure 6.2.6-1. Technologies Classification Matrix - Spacecraft

was arrived at. This envelope is only preliminary, and it is conceivable that under the actual constraints the spacecraft envelope will exceed capabilities of the present Shuttle orbiter. In either circumstance it is assumed that there will be on-orbit assembly necessary to construct this payload, at least in terms of integrating major payload segments, but not involving the assembly of large optics. This requires special tools, training, and equipment, however, it is not considered a technology advancement.

Advancement 34 - Vibratory Misalignment Due To Large Scanning Mirrors

This advancement is related to Advancement 23 dealing with scanning mechanisms for large laser telescopes. The problem that is addressed in Advancement 34 is the vibratory perturbation that is imposed on the telescopes for LIDAR as well as other sensors, due to the rotating motion of the scanning mirrors.

The engineering development will include the momentum compensation devices as well as active and passive vibratory isolation systems, using already developed technology.

Technology Development 35 - Large Spacecraft Systems Technology

This requirement specifically applies to the Mission 6 spacecraft which accommodates a payload of over 9600 kilograms and which occupies a major portion of the cargo bay. The development of this technology will enhance other missions, namely Missions 3 and 5 which can be classified as intermediate size payloads. The technology advancement consists of solving the system level problems associated with the design, demonstration of the performance and reliability of such a large spacecraft. As mentioned previously, from a subsystem and individual design aspect point-of-view, each item can be solved within the present state-of-the-art. However, at the systems level there will be significant interactions between power, thermal, structural dynamic and orbit considerations. The overall design must be evaluated relative to cost and the ultimate mission scientific return. In addition there must be a consideration of the need for deployment in orbit, maintenance, and orbital servicing for the long duration mission. In concert, working these problems for the large payload will constitute a true advancement in the state-of-the-art and requires new design approaches and orbit operational techniques.

The state-of-the-art in a large payload design is typified by the Spacelab design and some of the large spacelab payloads that are being accommodated. The largest payload that is in an advanced stage of development is the Long Duration Exposure Facilities (LDEF); however, this payload is a passsive system which does not have any of the design challenges of a Mission 6 spacecraft. There is a significant amount of commonality between the requirements as specified here and those of approximately 30 missions projected by NASA for the 1990's and which require large space systems. Looking at the projection of large spacecraft for the later part of this decade and the beginning of the 1990's we see payloads such as the Large Optical/UV Telescope, the Geostationary Platform Demonstration Spacecraft, the Soil Moisture Monitoring Spacecraft, and the Large Power Module.

In order to prevent a technology gap in this area, it is recommended that the Atmospheric Observation System be factored into the overall technology development for the large spacecraft systems.

6.3 CRITICALITY OF THE TECHNOLOGIES

A requirement of the Study was to identify those space-related technologies which are critical to the attainment of the knowledge objectives in troposhperic research. The first step in this assessment was the establishment of acceptable and effective criteria for criticality. Within the content of the Study, all items defined as technologies require advancements of the state-of-the-art. Among these, there are various degrees of needs for that technology, depending on the following factors:

Existence of a Technology Gap

Those technology items that constitute a technology "gap" are considered more critical than those that are not. A gap exists if the technology projection, based on current and future trends and plans, fails to meet the requirment within the identified timeframe.

Dependence of the Mission Upon the Technology

Two considerations enter in the criteria: (a) the number of missions to which the technology is relevant; (b) the "enhancing" or "enabling" relationship between the technology and missions. For instance, the highest dependence rating would be given to a development that benefits all six missions in an "enabling" way (a hypothetical case which does not occur in the assessment.)

Breadth of Applicability to the Satisfaction of the Measurement Requirements

This factor distinguishes between "narrow" technologies for instance, which benefit a particular type of tropospheric measurement versus one that has made applicability across several types of measurements and species. Four general categories of measurements were considered here: (a) trace species concentrations; (b) aersol number density distribution and concentration; (c) thermal characterization of the atmosphere (e.g., thermal profile, surface temperature; (d) atmospheric dynamics (e.g., winds, cloud movement).

Relevance/Importance of the Technology to the Satisfaction of the Measurement Requirements

This factor determines the degree to which the technology is important in meeting the measurement requirements, but is restricted to aspects that are not encompassed in the other factors. For instance, it considers whether there are alternative ways of making a measurement.

The method employed in the rating of the criticality of each technology item involved a relative assessment of the degree to which each of the above mentioned criteria applies. A numerical rating was applied to those individual assessments, and the resulting ranking was used to establish a subset of the total list of technologies which are considered most critical.

The list of critical technologies shown on Table 6.3-1 constitute an assessment of the sixteen (16) critical technologies, out of a total of thirty-five (35) potential technologies and twenty-seven (27) actual technology advancements.

Several of the technology items are considered "precursory" requirements since they impact the foundation upon which the sensors, mission, and spacecraft will be built. These are the items related to tropospheric baseline and the formulation of information extraction algorithms for the species measurements. Therefore, these technologies need to be addressed early in the program.

The results show a predominance of measurement-related technology items as compared with system and subsystem-related items. Within this measurement category, 50% relate to passive sensors, which need the most work in trying the AOS requirements; 20% to active sensors; the remainder 30% are related to either active or passive sensors.

Table 6.3-1. Critical Technologies for AOS

Tropospheric Baseline Data

- Detailed Spectral Definition
- Improved Definition of Aerosol Properties and Growth
- Chemical Kinetics of Gaseous and Aerosol Species

Tropospheric Measurements

- Sensing Techniques for Weak Gaseous Species
- Sensors for Aerosol Size Distribution and Composition
- Cryogenic Cooling of Detector and Optics
- Coupling of Detector Arrays with Passive Radiometers
- Gas Filter Radiometers
- Interferometric Spectrometers
- Laser Heterodyne Radiometers
- Partial Scan Interferometers
- CO and CO_2 Lasers for LIDAR
- Excimer Lasers for LIDAR

Command and Data Management

- Random Access Memories for On-Board Processing
- Information Extraction Algorithms

Spacecraft

- Large Spacecraft System Technology

SECTION 7

SECURITY CLASSIFIED REVIEW

SECTION 7
SECURITY CLASSIFIED REVIEW (TASK 5)

The task that is reported here has the objective of reviewing the validity of the technology assessment in light of SECURITY classified research and development activities in other Government agenices, for the purpose of revising the study results according to these new technology inputs. The material reported herein is not classified, even though the work cited has been performed under Department of Defense sponsorship. The method used in this task was to interview various organizations and individuals who are cognizant of research and development activities which have high likelihood of correlating with the technology items identified in Section 6 of the AOS Final Report. Several of the people contacted are in our General Electric Space Systems Division Organization and have been working in classified programs for a significant period of time. Other organizations and individuals are in DoD and academic research organizations. The amount of detail that was furnished in some of the areas is adequate for a first order assessment but not highly detailed; this is understandable in terms of the threshold of information above which the information assumes a classified status. Several references have been provided in terms of individuals or organizations who are currently involved in the advancement of the state-of-the-art. Table 7.1 shows the individuals interviewed and their organizations. Following are the descriptions of the results of the contacts that were performed.

7.1 ORGANIZATIONS AND PERSONS CONTACTED IN THE SURVEY

Meeting with Mr. John Conrad and Mr. Murray Gross from Advanced Military Space Programs:

A briefing was presented to Mr. Conrad and Mr. Gross concerning the results of the AOS Study. After the briefing discussion was held concerning potential R&D areas of interest in the AOS Study. The one item of significance was a reference to an unclassified document called "Current STP Payloads" compiled by the Space Test Program Department in the Department of Defense. Mr. Gross produced a copy of this document which listed and described all the current and planned programs of experimentation within the DoD. A review was made of the contents of that document; this revealed one specific experiment that has been flown in space which may be of interest in the AOS technology assessment. It is the Wyoming

Table 7-1. Individuals/Organization Participating in the Task 5 Survey

GE/SD Advanced Military Programs

- John Conrad, Systems Engineer
- Murray Gross, Systems Engineer

GE/SD Electro-Optics and Sensors Subsection

- Dr. A. Sterk, Consultant
- Dr. C. Anderson, Manager, EO&S

USAF Technical Applications Center

- Colonel J. Kershaw
- Major Ronald F. Tuttle
- Mr. Marcel J. Kniedler
- Major Douglas E. Caldwell
- Major Larry McGee
- Captain Charles Scull
- Lt. Colonel Garcia
- Lt. Colonel Bigone

University of Wyoming, Department of Physics and Astronomy

- Dr. Theodore J. Pepin

Preliminary Aerosol Monitor II which is listed under ONR601. Subsequent communication was made with the Principal Investigator of that particular experiment, Dr. Theodore J. Pepin and Dr. Roys Lane from the Department of Physics and Astronomy in Laramie, Wyoming. Dr. Pepin sent a copy of a paper (unclassified) which described the experiment. The title is "Remote Sensing of the Vertical Concentration of Aerosols and Ozone in the Arctic Atmosphere." The instrument described in the paper is called PAM II, a three-channel sun photometer which is pointed towards the Sun in the P78-1 (DoD Spacecraft). The spacecraft which accommodates the instrument operates in a circular polar sunsynchronous high-noon orbit of 600 Km altitude. This orbit is designed to permit observations of the arctic and antarctic regions and their atmospheres during sunsets and sunrises. The instrument has three channels which have been selected to allow the determination of vertical concentration of aerosols. In addition, it permits the determination of vertical concentration of ozone and NO_2 in the stratosphere. The wavelengths of these channels are .43, .6 and 1.0 micrometer. In the paper the authors discuss the possibility of measurements in the troposphere, however, this does not seem very likely since the high cirrus clouds will interfere with the measurements of the limb.

Consultation was made with Dr. Andrew Sterk, Consultant, Scientific Instruments, Electro-optics and Sensors Subsection. Dr. Sterk reviewed the requirements as specified in the Final Report and advised us in his area of expertise as follows: There is significant amount of research in the area of focal plane detection, as evidenced by the numerous papers that have been published and that are in process of being published in this particular area. As an example he cited the following papers that will be presented at the meeting of the Society of Photogrametric Instrumentation Engineers: "Design Requirements for Large Scale Focal Planes, W.S. Chan, M. Schlessinger, the Aerospace Corporation; "Conceptual Design and Requirements of a Pushbroom Focal Plane", W. Davis, the Aerospace Corporation.

Dr. Sterk reviewed some of the developments in focal plane sensors that have been made within the General Electric Company, particularly those performed in the Electronics Laboratory in Syracuse, New York. Table 7.2 is a compilation of some of the references to documentation relative to those developments.

The meeting with the AFTAC uncovered several areas in which the DoD is working and which are able to be reported in an unclassified manner. First of all there is the Air Force work concerning the specification of threshold of detectability of various gases. AFTAC is responsible for these studies, some of which are being conducted in private laboratories. Concerning the area of interferometric spectrometers, it was mentioned that the University of Utah has a contract to develop a Michelson interferometer for AFTAC. Denver University is developing algorithms and spectral matching techniques for imaging data. It was also mentioned that Honeywell in St. Petersburg is working on a scanning interferometer. The Air Force Geophysics Laboratory is working on cryogenic refrigerators for IR detector applications. In one package that was developed, two refrigerators are operating in tandem, and provide a certain amount of redundancy in the event of malfunction of one of the refrigerators. Although no specific performance characteristics were cited during the meeting, it appears that this AFGL refrigerator design has significant weight and power advantages over previous closed-cycle refrigerator systems.

During the meetings with AFTAC, it was evident that there was a classified area in which significant amount of work had been performed, but due to the sensitivity of this data, transfer of this information to NASA was deferred until such time as the proper interfaces could be established. Communication was established between Mr. Lloyd Keafer at NASA and Colonel Caldwell at AFTAC, and a proper procedure for this information transfer was discussed.

Table 7-2. IR Focal Plane Sensor Component Experience

The following paragraphs describe relevant work performed under the General Electric IR&D Program toward development of advanced IR focal plane detector arrays and integrated signal processor components. These efforts have also produced significant test and simulation capabilities, including a 3-5 micrometer IR Search/Track Facility.

1. Infrared Focal Plane Development with InSb CIDs.

(U) Developed linear and two-dimensional detector arrays with a variety of tailored geometries for search and imaging applications. The following project summaries describe some of the highlights of developments of InSb CID infrared array technology.

(U) IR Detector Mosaic Development, Contract F33615-72-C-1872, Wright-atterson Air Force Base. Developed the technique of using silicon oxide (SiOx) as a dielectric on P- and N-type InSb. Pyrolytic deposition was proven and anodic oxide was discarded. Several detectors and arrays were fabricated using masks previously developed for the components. This work yielded an empirical basis for development planning to achieve the material and tecnhique baseline needed for applications such as an IR imaging sensor using time delay and integration (TDI) in the mid-IR spectral band.

(U) InSb MOS Detector, Contract DAAK62-73-C-0006, U.S. Army Night Vision and Electro-Optical Laboratory. Studied basic MOS technology, which up to this time has been applied mainly to silicon detectors for the visual and near-IR waveband and InSb in the mid-IR waveband. The program supported the basic development of CID technique to InSb. Detectors, in the configuration used in Sidewinder and Chaparral missiles, were fabricated for evaluation. The program was part of the baseline technology development upon which the subsequent monolithic area arrays needed for Time Delay and Integration (TDI) application were based.

(U) Linear and Area InSb CID Arrays, Contract DAAH01-75-C-0242, U.S. Army Missile Command. Designed and fabricated masks required for processing a CID area imager in a 32 x 32 format. Major effort focused on development of process techniques related to providing an area imaging device able to operate in the 3-5 micron waveband. Several operating imagers and scanners in demountable dewars, as well as support electronics, were delivered.

(U) InSb CID TDI Arrays, Contract N00173-76-C-0128, U.S. Navy. Arrays with cell geometry meeting the then-current Navy interest in preliminary TDI experiments were developed. Typically, the arryas are 16 x 24 (16 in the TDI direction).

Table 7-2. IR Focal Plane Sensor Component Experience (Cont.)

(U) Focal Plane Array for IR Search Systems, Contract N00173-77-C-0231, U.S. Navy. A two-phase program that NRL started with a Design Study for advanced Navy Tactical IR Search Senbsor Focal Planes (integrated detector array and signal processing), proceeding to the design and fabrication of individual signal processor modules to form a total in-line signal processor, including 2-D TDI functions and culminating with the construction of a focal plane.

(U) Second Generation IR Program, General Electric IR&D, 1978-1980. This independent R&D Program is addressed to CID process improvement, device characterization, and integration of InSb CID arrays into complex focal planes, with integral complex signal processing components.

(U) New Array Developments. Several new area arrays are being developed, both for staring and TDI applications. A 16 x 96 TDI array being developed for Texas Instruments, is funded by NADC under prime contract N62269-78-C-0152. Other 2-D arrays are being developed for Raytheon, General Dynamics, and Ford; these are for missile seeker applications. These areas include a 32 x 32 and a recent proposed 128 x 128 array.

SECTION 8

CONCLUDING REMARKS

SECTION 8
CONCLUDING REMARKS

The value of this assessment study is the ability to uncover areas or patterns of future developmental needs based on a whole observational scenario. The scope of the scenario in the AOS Study encompasses a long period, one and a half decades; instruments ranging from those that are mere extensions of current technology to those only in the conceptual stage; and tropospheric measurements from the routine to the highly experimental. Based on a preliminary projection of observational objectives, the scenario surveyed the generic instruments, spacecraft missions and end-to-end data systems that may be necessary to produce the necessary scientific information. Thus, the technology assessment performed in the study is considered valuable in having had the benefit of a broad look at the implications and dependencies between specifications such as spatial-temporal coverage, and attendant instruments, orbits, spacecraft, and information management systems.

An active aircraft program of tropospheric research will be instrumental in firmly establishing the ultimate measurement requirements. Towards this end, close coupling is envisioned between this aircraft program, initial space experiments (principally on-board the Space Shuttle) and ground-based laboratory investigations. The ultimate system for atmospheric observation will be an evolutionary and complementary one which will include spacecraft, aircraft, and in-situ sensors.

We believe that both active and passive sensors will play important roles in a future atmospheric observation system. NASA-Langley is addressing the role and program of passive sensors for tropospheric research in a workshop in the summer of 1981. Concerning active sensors, LIDAR will provide the long-range, detailed, research type of measurements required for true advances in atmospheric science.

Besides the sensing techniques, the system challenges will include the end-to-end data system, particularly when the tropospheric needs are combined with those pertaining to other regions of the atmosphere and other disciplines such as Climatology. Similarly, larger and more technologically complex spacecraft will be necessary to support future multidisciplinary missions.

(Part II of this study extends the effort to other atmospheric disciplines and multidisplinary missions). Since much of the technology related to tropospheric research is also pertinent to other disciplines, a thorough flow of developmental information will be essential to program efficiency. Included in this flow should be the information on related technology (that can be unclassified developed by other organizations such as DoD.

APPENDIX A

PRELIMINARY MEASUREMENT NEEDS

CORRELATED WITH KNOWLEDGE OBJECTIVES

Table 3.2.5-1a. Measurement Needs Relative to Knowledge Objectives #1.a

1a. MEASURE AND MODEL THE EXCHANGE OF OZONE BETWEEN STRATOSPHERE AND TROPOSPHERE

QUANTITY	RANGE	ACCURACY	SHORT-TERM PRECISION	MEASUREMENT FREQUENCY	GEOGRAPHICAL REGION	HORIZONTAL RESOLUTION	VERTICAL RESOLUTION
O_3	10^{11} - 10^{13} cm^{-3}	20%	2%	WEEKLY	A FEW ISOLATED REGIONS AT DIFFERENT LATITUDES	200 km	1 km (6 to 20 km)[a]
T[b]	180-280 K	10K	1K	SAME	SAME	SAME	SAME

NOTES: (a) FOR INFORMATION ON BOUNDARY LAYER - FREE TROPOSPHERE EXCHANGE, MEASUREMENTS SHOULD BE MADE DOWN TO OKM WITH 0.5 km RESOLUTION BELOW 4 km.

(b) TEMPERATURE MEASUREMENT TO LOCATE TROPOPAUSE

Table 3.2.5-1b. Measurement Needs Relative to Knowledge Objectives #1.b

1b. DETERMINE CLIMATOLOGY RELATED TO SURFACE LOSS RATE OF OZONE.

QUANTITY	RANGE	ACCURACY	SHORT-TERM PRECISION	MEASUREMENT FREQUENCY	GEOGRAPHICAL REGION	HORIZONTAL RESOLUTION	VERTICAL RESOLUTION
O_3	10^{11}-$4x10^{12}$ cm^{-3}	5%	2%	1/WEEK	GLOBAL	100 km	5 km (0 to 50 km)
Solar Flux	(400 - 800 nm)	1%	-	1/WEEK	"	"	2 km (trop)
Solar Flux	(310 - 360 nm)	1%	-	1/WEEK	"	"	2 km (trop)
T(h)	200 - 320K	0.2 k	0.1k	1/WEEK	"	"	2 km (trop)
T_s	250 - 320K	0.2 k	0.1k	1/WEEK	"	"	-----
NO_2	10^7 - 10^{10} cm^{-3}	10%	5%	1/WEEK	"	"	5 km (0 to 50 km)
Aerosol Diameter (cm)	10^{-6} - 10^{-3}	5%	5%	1/WEEK	"	"	2 km (trop)
Cloud Cover	0 - 100%	5%	5	1/WEEK	"	"	------

Table 3.2.5-1c. Measurement Needs Relative to Knowledge Objectives #1.c

1c. QUANTIFY THE OZONE PHOTOCHEMICAL PRODUCTION/LOSS PROCESSES IN THE ATMOSPHERE

QUANTITY	RANGE	ACCURACY	SHORT-TERM PRECISION	MEASUREMENT FREQUENCY	GEOGRAPHICAL REGION	HORIZONTAL RESOLUTION	VERTICAL RESOLUTION
NO	$5x10^7$-10^9 cm^{-3}	20%	3%	WEEKLY	A FEW ISOLATED REGIONS OF DIFFERENT LATITUDES	200 km	2 km
HO_2 (a)	2×10^7-2×10^9	20%	3%	"	"	"	2 km
O (a)	$1x10^3$ - $1x10^5$	50%	10%	"	"	"	2 km
OH (a)	$1x10^5$ - $1x10^7$	20%	3%	"	"	"	2 km
O_3	10^{11} - 10^{13}	20%	3%	"	"	"	2 km
SOLAR FLUX (400 - 800 nm)		5%	-	"	"	"	2 km
SOLAR FLUX (310 - 360 nm)		5%	-	"	"	"	2 km

(a) Species is short-lived and difficult to measure remotely

Table 3.2.5-1d. Measurement Needs Relative to Knowledge Objectives #1.d

1d. ASSESS IMPACT OF ANTHROPOGENIC ACTIVITY ON THE NATURAL TROPOSPHERIC OZONE CYCLE.

QUANTITY	RANGE	ACCURACY	SHORT-TERM PRECISION	MEASUREMENT FREQUENCY	GEOGRAPHICAL REGION	HORIZONTAL RESOLUTION	VERTICAL RESOLUTION
NO	10^8 - 10^{10} cm^{-3}	25%	10%	2/DAY	GLOBAL[a]	50 km	2/troposphere[b]
O_3	10^{11} - 10^{13} cm^{-3}	20%	2%				

(a) NEED TO TRAVERSE AREAS OF ANTHROPOGENIC ACTIVITY AND UPWIND AND DOWNWIND FROM THESE PLUS ONE OR TWO UNCONTAMINATED AREAS.

(b) NEED AT LEAST TWO RESOLUTION UNITS IN TROPOSPHERE, ONE IN THE BOUNDARY LAYER AND ONE IN THE FREE TROPOSPHERE.

Table 3.2.5-1e. Measurement Needs Relative to Knowledge Objectives #1.e

1e. QUANTIFY THE GLOBAL NATURAL AND ANTHROPOGENIC SOURCE STRENGTHS OF CH_4, CO AND NMHC's

QUANTITY	RANGE	ACCURACY	SHORT-TERM PRECISION	MEASUREMENT FREQUENCY	GEOGRAPHICAL REGION	HORIZONTAL RESOLUTION	VERTICAL RESOLUTION
CO	$2x10^{11}$-$5x10^{12}cm^{-3}$	50%	20%	2/DAY	GLOBAL	1000 km	2/troposphere[a]
CH_4	$2 \times 10^{12} - 1 \times 10^{14}$	50%	20%	1/WEEK			
C_2H_6	$10^{10} - 10^{12}$	50%	20%	1/WEEK			
C_2H_4	$10^{9} - 10^{11}$	50%	20%	1/DAY			
C_2H_2	$10^{9} - 10^{11}$	50%	20%	1/DAY			
TERPENES [b]							
(c)							

(a) NEED AT LEAST TWO RESOLUTION ELEMENTS IN TROPOSPHERE, ONE IN BOUNDARY LAYER AND ONE IN FREE TROPOSPHERE

(b) TERPANES NEED MORE INVESTIGATION

(c) AN INSTRUMENT TO SURVEY SPECTRUM TO DETERMINE MANY HYDROCARBONS IS DESIRABLE. A SENSITIVITY OF THE ORDER OF 10^8 cm^{-3} IS NEEDED

Table 3.2.5-1f. Measurement Needs Relative to Knowledge Objectives #1.f

1f. UNDERSTAND THE METHANE AND NMHC OXIDATION CHAINS.

QUANTITY	RANGE	ACCURACY	SHORT-TERM PRECISION	MEASUREMENT FREQUENCY	GEOGRAPHICAL REGION	HORIZONTAL RESOLUTION	VERTICAL RESOLUTION
	NEED LAB AND FIELD DATA TO UNDERSTAND THE PROBLEM.						
	SUGGESTION OF SPECIES TO BE MEASURED REMOTELY SHOULD FOLLOW AN UNDERSTANDING FOR SUCH DATA.						

Table 3.2.5-1g. Measurement Needs Relative to Knowledge Objectives #1.g

1g. UNDERSTAND THE CH_4 AND NMHC SOURCE STRENGTH IN TERMS OF VARIABLES THAT AFFECT PRODUCTION

QUANTITY	RANGE	ACCURACY	SHORT-TERM PRECISION	MEASUREMENT FREQUENCY	GEOGRAPHICAL REGION	HORIZONTAL RESOLUTION	VERTICAL RESOLUTION
THIS IS A LOCALIZED PROBLEM THAT SHOULD BE STUDIED IN-SITU, ON THE GROUND							
SHOULD INVESTIGATE AT ONE LOCALE FOR EACH TYPE OF SOURCE							

Table 3.2.5-1h. Measurement Needs Relative to Knowledge Objectives #1.h

1h. DETERMINE TEMPORAL AND SPATIAL VARIATIONS OF CHEMICALLY REACTIVE NITROGEN SPECIES [c]

QUANTITY	RANGE	ACCURACY	SHORT-TERM PRECISION	MEASUREMENT FREQUENCY	GEOGRAPHICAL REGION	HORIZONTAL RESOLUTION	VERTICAL RESOLUTION
NO	5×10^7-10^9 cm^{-3}	50%	10%	DAILY	GLOBAL	200 km	2/trop[a]
NO_2	5×10^7-10^9	50%	10%				
HNO_3	10^{10} - 10^{12}	50%	10%				
HNO_2	10^5 - 10^8	50%	20%				
OH (d)	10^5 - 10^7	50%	20%				
HO_2 (d)	2×10^7-2×10^9	50%	20%				
N_2O[b]	10^{12} - 2×10^{13}	50%	10%				
O('D)[b]	10^{-4} - 10^{-1}	50%	20%				

(a) NEED AT LEAST TWO RESOLUTION ELEMENTS IN TROPOSPHERE, ONE IN BOUNDARY LAYER AND ONE IN FREE TROPOSPHERE. 2 km RESOLUTION THROUGHOUT WOULD BE BETTER.

(b) NO POINT IN MEASURING N_2O UNLESS O('D) IS ALSO MEASURED.

(c) THIS IS SOMEWHAT A LOCAL PROBLEM BUT HAS GLOBAL EFFECTS. MAYBE BETTER UNDERSTOOD BY 1990.

(d) SPECIES IS SHORT-LIVED AND DIFFICULT TO MEASURE REMOTELY.

Table 3.2.5-1i. Measurement Needs Relative to Knowledge Objectives #1.i

1i. ESTABLISH THE ROLE OF THE BIOSPHERE AS A SOURCE OF REACTIVE NITROGEN SPECIES AND HOW ANTHROPOGENIC ACTIVITIES MAY ALTER THE NATURAL BIOSPHERE/ATMOSPHERE BUDGET OF NITROGEN SPECIES[a]

QUANTITY	RANGE	ACCURACY	SHORT-TERM PRECISION	MEASUREMENT FREQUENCY	GEOGRAPHICAL REGION	HORIZONTAL RESOLUTION	VERTICAL RESOLUTION
HNO_3	$10^{10} - 10^{12}$ cm^{-3}	50%	10%	DAILY	UPWIND AND DOWNWIND FROM ANTHROPOGENIC SOURCE AREAS	100 km	2/TROP[b]
NO	$5 \times 10^7 - 10^9$	50%	10%				
NO_2	$5 \times 10^7 - 10^9$	50%	10%				

(a) THIS IS PRIMARILY A LOCAL PROBLEM BUT HAS GLOBAL EFFECTS AND CAN PROFIT FROM REGIONAL MEASUREMENTS

(b) NEED AT LEAST TWO RESOLUTION ELEMENTS IN TROPOSPHERE, ONE IN BOUNDARY LAYER AND ONE IN FREE TROPOSPHERE

Table 3.2.5-1j. Measurement Needs Relative to Knowledge Objectives #1.j

1j. DETERMINE THE ROLE OF HETEROGENEOUS CHEMISTRY OF NITROGEN SPECIES, BOTH AS A SINK AND AS PRECURSORS IN THE PROCESS OF AEROSOL PRODUCTION.

QUANTITY	RANGE	ACCURACY	SHORT-TERM PRECISION	MEASUREMENT FREQUENCY	GEOGRAPHICAL REGION	HORIZONTAL RESOLUTION	VERTICAL RESOLUTION
HNO3	10^{10}-10^{12} cm^{-3}	20%	10%	2/DAY[a]	CLEAN REGION	200 km	2/trop[b]
NH_3	10^9 - 10^{12}	20%	10%				
HNO_2	10^5 - 10^8	50%	20%				
H_2O	10^{14} - 10^{18}	50%	20%				
Aerosol Comp.	-	-	-	2/DAY[a]	GLOBAL WITH SPECIAL ATTENTION TO DISTRIBUTION AROUND CLOUDS	200 km	2/trop[b]
Aerosol Number Density	10^{-1}-10^5 cm^{-3}	50%	20%				
Aerosol Diameter	10^{-6}-10^{-2} cm	50%	20%				

(a) LABORATORY MEASUREMENTS NEEDED TO ESTABLISH KINETICS OF FORMATION OF AEROSOLS FROM HNO_3, ETC.

(b) NEED AT LEAST TWO RESOLUTION ELEMENTS IN TROPOSPHERE, ONE IN BOUNDARY LAYER AND ONE IN FREE TROPOSPHERE

Table 3.2.5-2a. Measurement Needs Relative to Knowledge Objectives #2.a

2a. UNDERSTAND THE REACTION PATHS AND RATES OF SULFUR SPECIES WITH EMPHASIS ON THE CHEMICAL CONVERSION OF SO_2 TO H_2SO_4 AND THE FATE OF H_2SO_4

QUANTITY	RANGE	ACCURACY	SHORT-TERM PRECISION	MEASUREMENT FREQUENCY	GEOGRAPHICAL REGION	HORIZONTAL RESOLUTION	VERTICAL RESOLUTION
H_2SO_4	10^7 - 10^{10} cm^{-3}	20%	10%				
SO_2	10^8 - 10^{12}	20%	10%				
H_2S	10^8-5 x 10^{10}	50%	10%				
HSO_3	10^6 - 10^9	20%	10%	2/DAY	CLEAN, CLEAR AREA	500 km	1 km
H_2O	10^{14} - 10^{18}	50%	20%				
SO_3	10^{-2} - 10^1	50%	20%				
SO	10^0 -10^4	50%	20%				
HO_2	$3x10^7$ - $2x10^9$	20%	10%				
Aerosol Comp.	-	-	-				
Aerosol Number Density	10^{-1}-10^5 cm^{-3}	50%	20%				
Aerosol Diameter	10^{-6} - 10^{-2}cm	50%	20%				

(a) LABORATORY INVESTIGATIONS COULD MAKE THESE REQUIREMENTS MORE REASONABLE

Table 3.2.5-2b. Measurement Needs Relative to Knowledge Objectives #2.b

2b. UNDERSTAND THE STRENGTHS OF NATURAL AND ANTHROPOGENIC SOURCES OF SULFUR SPECIES

QUANTITY	RANGE	ACCURACY	SHORT-TERM PRECISION	MEASUREMENT FREQUENCY	GEOGRAPHICAL REGION	HORIZONTAL RESOLUTION	RESOLUTION
H_2S	10^8-5 x 10^{10} cm^{-3}	50%	10%	1 $week^{-1}$	GLOBAL WITH EMPHASIS ON URBAN REGIONS AND UPWIND AND DOWNWIND FROM THERE	200 km	2/trop[a]
SO_2	10^9 - 10^{11}	50%	10%	1 $week^{-1}$			
H_2SO_4	10^7 - 10^{10}	20%	10%	1 $hour^{-1}$			

(a) NEED AT LEAST TWO RESOLUTION ELEMENTS IN TROPOSPHERE, ONE IN BOUNDARY LAYER AND ONE IN FREE TROPOSPHERE

Table 3.2.5-2c. Measurement Needs Relative to Knowledge Objectives #2.c

2c. UNDERSTAND THE LARGE-SCALE TRANSPORT AND DIFFUSION OF SULFUROUS GASES IN THE BOUNDARY LAYER AND THE FREE TROPOSPHERE.

QUANTITY	RANGE	ACCURACY	SHORT-TERM PRECISION	MEASUREMENT FREQUENCY	GEOGRAPHICAL REGION	HORIZONTAL RESOLUTION	VERTICAL RESOLUTION
SO_2	10^8 - 10^{11} cm^{-3}	50%	20%	1/HOUR	GLOBAL WITH EMPHASIS ON URBAN REGIONS AND DOWNWIND FROM THEM	200 km	2/TROP.[a]
H_2S	10^6 - 10^{10}	50%	20%				
H_2SO_4	10^7 - 10^{10}	50%	20%				
WINDS	1-100 $msec^{-1}$	50%	20%	2/DAY	GLOBAL	50 km	1 km-BOUNDARY LAYER
	0-360°	10°	10°				3 im-FREE TROPOSPHERE

(a) NEED AT LEAST TWO RESOLUTION ELEMENTS IN TROPOSPHERE, ONE IN BOUNDARY LAYER AND ONE IN FREE TROPOSPHERE.

Table 3.2.5-2d. Measurement Needs Relative to Knowledge Objectives #2.d

2d. OBTAIN DATA ON SPATIAL AND TEMPORAL DISTRIBUTION, SIZE DISTRIBUTION, CONCENTRATION, INDEX OF REFRACTION, AND CHEMICAL COMPOSITION OF NATURAL AND ANTHROPOGENICALLY PRODUCED AEROSOLS.

QUANTITY	RANGE	ACCURACY	SHORT-TERM PRECISION	MEASUREMENT FREQUENCY	GEOGRAPHICAL REGION	HORIZONTAL RESOLUTION	VERTICAL RESOLUTION
Aerosols							
State (solid, liquid, heterogeneous)	-	-	-			200 km	2/trop[a]
Chemical Composition	-	-	-		GLOBAL WITH SPECIAL EMPHASIS ON COASTAL AREAS AND TO THE EAST AND WEST OF THEM		
Number Density	10^{-1}-10^{5} cm^{-3}	30%	20%				
Diameter	10^{-6}-10^{-2} cm	30%	20%				
Mass	10^{-17}-10^{-14} gcm^{-3}	60%	30%				
Index of Refraction	1.3 - 1.8	1%	1%				

(a) NEED AT LEAST TWO RESOLUTION ELEMENTS IN TROPOSPHERE, ONE IN BOUNDARY LAYER AND ONE IN FREE TROPOSPHERE.

Table 3.2.5-2e/f. Measurement Needs Relative to Knowledge Objectives #2.e/f

2e. DETERMINE THE CHEMICAL AND PHYSICAL PROCESSES LEADING TO THE FORMATION, GROWTH, AND REMOVAL OF VARIOUS TROPOSPHERIC AEROSOLS

2f. DETERMINE THE ROLE OF AEROSOLS AS ACTIVE CONSTITUENTS AND/OR AS CATALYSTS IN THE ATMOSPHERIC CHEMICAL CYCLES

QUANTITY	RANGE	ACCURACY	SHORT-TERM PRECISION	MEASUREMENT FREQUENCY	GEOGRAPHICAL REGION	HORIZONTAL RESOLUTION	VERTICAL RESOLUTION
H_2O	10^{14} - 10^{18} cm^{-3}	50%	20%	1/DAY	CLEAN REGION WITH SPECIAL ATTENTION TO DISTRIBUTION AROUND CLOUDS	500 km	
H_2SO_4	10^{7} - 10^{10}	50%	20%	1/HOUR		50 km	
HNO_3	10^{10} - 10^{12}	50%	20%	1/DAY	SAME	500 km	2/trop[a]
NH_3	10^{9} - 10^{12}	50%	20%	1/DAY	SAME	500 km	
Aerosol							
State	-	-	-	2/DAY	SAME	200 km	
Composition	-	-	-				
Number Density	10^{-1} - 10^{5} cm^{-3}	20%	10%				
Diameter	10^{-6} - 10^{2} cm	20%	10%				
Mass	10^{-17} 10^{-14} gm cm^{-3}	50%	20%				

(a) NEED AT LEAST TWO RESOLUTION ELEMENTS IN TROPOSPHERE, ONE IN BOUNDARY LAYER AND ONE IN FREE TROPOSPHERE.

Table 3.2.5-2g. Measurement Needs Relative to Knowledge Objectives #2.g

2g. STUDY THE LONG-RANGE TRANSPORT AND DISPERSION OF AEROSOL (BOUNDARY LAYER AND FREE TROPOSPHERE)

QUANTITY	RANGE	ACCURACY	SHORT-TERM PRECISION	MEASUREMENT FREQUENCY	GEOGRAPHICAL REGION	HORIZONTAL RESOLUTION	VERTICAL RESOLUTION
H_2O	10^{14} - 10^{18} cm^{-3}	50%	20%				
Aerosol							
State	-	-	-	2/DAY	GLOBAL WITH SPECIAL ATTENTION TO DISTRIBUTION AROUND CLOUDS	200 km	2/Trop[a]
Composition	-	-	-				
Number Density	10^{-1}-10^{5} cm^{-3}	20%	10%				
Diameter	10^{-6}-10^{-2} cm	20%	10%				
Wind	1-100 $msec^{-1}$	50%	20%	2/DAY	SAME	50 km	1 km, Boundary Layer
	0 - 360°	10°	10°				3 km, free troposphere

(a) NEED AT LEAST TWO RESOLUTION ELEMENTS IN TROPOSPHERE, ONE IN BOUNDARY LAYER AND ONE IN FREE TROPOSPHERE

Table 3.2.5-2h. Measurement Needs Relative to Knowledge Objectives #2.h

2h. MEASURE FLUX OF NATURAL AND SELECTED ANTHROPOGENIC SOURCES OF Hg, As, e, Pb.

QUANTITY	RANGE	ACCURACY	SHORT-TERM PRECISION	MEASUREMENT FREQUENCY	GEOGRAPHICAL REGION	HORIZONTAL RESOLUTION	VERTICAL RESOLUTION
Hg(g)							
$Hg(Cl_2)$ (g)							
SeO_2 (g)							
H_2SeO_4 (g)	(a)						
AsH_3 (g)							
$AsCl_3$ (g)							
SeO_2 (g)							
Particulates							
Composition							
Number Density							
Diameter							

(a) MORE DATA AND ANALYSIS REQUIRED.

Table 3.2.5-3a. Measurement Needs Relative to Knowledge Objectives #3.a

3a. QUANTIFY THE LARGE-SCALE STRATOSPHERE-TROPOSPHERE AND BOUNDARY LAYER - FREE TROPOSPHERE EXCHANGE PROCESSES IN THEIR ROLE IN RELATION TO WEATHER.

QUANTITY	RANGE	ACCURACY	SHORT-TERM PRECISION	MEASUREMENT FREQUENCY	GEOGRAPHICAL REGION	HORIZONTAL RESOLUTION	VERTICAL RESOLUTION
O_3	10^{11}-$4x10^{12}$ cm^{-3}	20%	10%	1/WEEK	GLOBAL	100 km	5 km (0 to 50 km)
H_2O	10^{14} - 10^{18}	50%	20%	1/WEEK	"	100 km	1 km (0 to 20 km)
CO	$2x10^{11}$-$5x10^{12}$	50%	20%	1/WEEK	GLOBAL (INCLUDING BOTH HEMISPHERES)	500 km	2/trop[a]
Solar Flux	300 - 800 nm	1%	1%	1/WEEK	GLOBAL	100 km	2 km(Trop)
T							
Winds:	Horiz: 1-100 $msec^{-1}$	50%	25%	1/HR DURING SIGNIFICANT ACTIVITY	AROUND MAJOR [b] VERTICAL ACTIVITY (e.g. FRONTS, EQUATOR)	10 km	1 km (0 to 20 km)
	Vert: 1-30 $msec^{-1}$	50%	25%				
	Direction 3d	10°	10°				
Aerosols[c]							
Number Density	10^{-1}-10^{5} cm^{-3}	50%	20%	1/DAY	GLOBAL	100 km	2 km
Diameter	10^{-6} - 10^{-2} cm	50%	20%				

(a) NEED AT LEAST TWO RESOLUTION ELEMENTS IN TROPOSPHERE, ONE IN BOUNDAY LAYER AND ONE IN FREE TROPOSPHERE

(b) ESPECIALLY ON ALL SIDES OF CLOUDS

(c) USED AS TRACER

Table 3.2.5-3b. Measurement Needs Relative to Knowledge Objectives #3.b

3b. VALIDATE THE MODELS WHICH DESCRIBE THE DYNAMIC PROCESSES.

QUANTITY	RANGE	ACCURACY	SHORT-TERM PRECISION	MEASUREMENT FREQUENCY	GEOGRAPHICAL REGION	HORIZONTAL RESOLUTION	VERTICAL RESOLUTION
	SEE	2c, 2g, 3a, 3c					

Table 3.2.5-3c. Measurement Needs Relative to Knowledge Objectives #3.c

3c. PROVIDE SYNOPTIC DATA ON ATMOSPHERIC DYNAMICS TO SUPPORT THE DEVELOPMENT OF A QUANTITATIVE UNDERSTANDING OF COULD CHEMISTRY ON ATMOSPHERIC CONSTITUENTS

QUANTITY	RANGE	ACCURACY	SHORT-TERM PRECISION	MEASUREMENT FREQUENCY	GEOGRAPHICAL REGION	HORIZONTAL RESOLUTION	VERTICAL RESOLUTION
HNO_3	10^{10}-10^{12} cm^{-3}	20%	10%	2/DAY	AROUND CLOUDS(b)	SMALL-DEPENDENT ON CLOUD SIZE	0.5 km
NH_3	10^{9}-10^{12}	20%	10%				
H_2SO_4	10^{7}-10^{10}	20%	10%				
AEROSOLS							
COMPOSITION	-	-	-				
NUMBER DENSITY	10^{-1}-10^{5} cm^{-3}	20%	10%	2/DAY	AROUND CLOUDS(b)	SAME	0.5 km
DIAMETER	10^{-6}-10^{-2} cm	20%	10%				
CLOUDS							
LOCATION	1/2 km up	20%	10%	2/HOUR DURING SIGNIFICANT ACTIVITY	AROUND CLOUDS	SAME	0.5 km
SIZE	1/2 km up	20%	10%				
MOVEMENT	1-100 $msec^{-1}$	50%	20%				
PARTICULATE COMPOSITION	-	-	-				
WINDS							
HORIZONTAL RANGE	1-100 msec	50%	20%	2/HOUR DURING SIGNIFICANT ACTIVITY	AROUND CLOUDS	SAME	0.5 km
VERTICAL RANGE	1-30 msec	50%	20%				
DIRECTION	3 DIMENSIONAL	10°	10°				

(a) LABORATORY MEASUREMENTS NEEDED TO ESTABLISH KINETICS OF AEROSOL FORMATION

(b) UPWIND AND DOWNWIND MEASUREMENTS MOST IMPORTANT

APPENDIX B

RESULTS OF NASA-LANGLEY ANALYSIS

OF AOS SPACECRAFT

APPENDIX B

NASA-LANGLEY INTERACTIVE DESIGN AND EVALUATION OF THE ATMOSPHERIC OBSERVATION SYSTEM SPACECRAFT FOR TROPOSPHERIC RESEARCH MISSIONS

INTRODUCTION

A "Technology Needs Assessment of an Atmospheric Observation System" circa 1990 requires numerous, sophisticated conceptualizations of the spacecraft configuration and subsystems before a complete system conceptual design can be chosen for the final technology needs assessment. Furthermore, the validity, breadth of application and lifetime of the technology assessment is only as good as the factual data base, the assumptions, and the analytical skills applied to this system conceptualization task. The task is made tractable via interaction with a large computer complex which stores and manipulates the data base and which routinely performs all of the analytical computations.

NASA-Langley has recently developed such a computer-aided capability for its research work with advanced spacecraft. Design of the AOS spacecraft represents a first opportunity to apply this capability to newly conceived Earth observation space

missions. For the AOS missions, the NASA-Langley analysis concentrated on spacecraft configuration concepts and the sizing of major supporting systems. The analysis assumes that instrument/sensor payload subsystems are selected, that they include the required advanced technology and that they are relatively firmly configured and packaged. For Missions No. 5 and No. 6, the sensor payload subsystems were conceptually designed by the General Electric Company, while the host spacecraft and its support subsystems were conceptually designed by NASA-Langley. In the NASA effort no attempt was made to include advanced spacecraft technology in the conceptual designs unless it was required to enable the missions. The spacecraft design concepts were, however, defined to the extent necessary to identify and assess technology advances which may not only enable but also enhance the performance of the prescribed missions. NASA-Langley performed only the conceptual design work; assessment of the spacecraft technology needs was performed by the General Electric Company.

APPENDIX B

NASA-LANGLEY'S COMPUTER-AIDED DESIGN CAPABILITY

Using NASA-Langley's "Interactive Design and Evaluation of Advanced Spacecraft" (IDEAS) computer programs, spacecraft systems designs were performed for this study using interactive computer-aided engineering, design and analysis methodology and techniques. The computer programs consisted of an integrated set of interactive software modules which created integrated spacecraft system designs in response to input mission requirements and specified subsystems options. A set of data products and parameters were generated for each design which defined the spacecraft's configuration and mass properties, performance characteristics and cost elements.

As shown in Figure B1, the program inputs consisted of two categories of data. The first category described the performance requirements of the AOS science experiment package for the specific mission. The second category, equipment selection factors, described the configurations of the principal spacecraft subsystems selected to implement the integrated host spacecraft (bus) design. The program inputs are used by subsystem design and equipment selection algorithms to provide a complete bus system design, down to the subsystem component level. Subsystem components are selected from a data base of spacecraft components

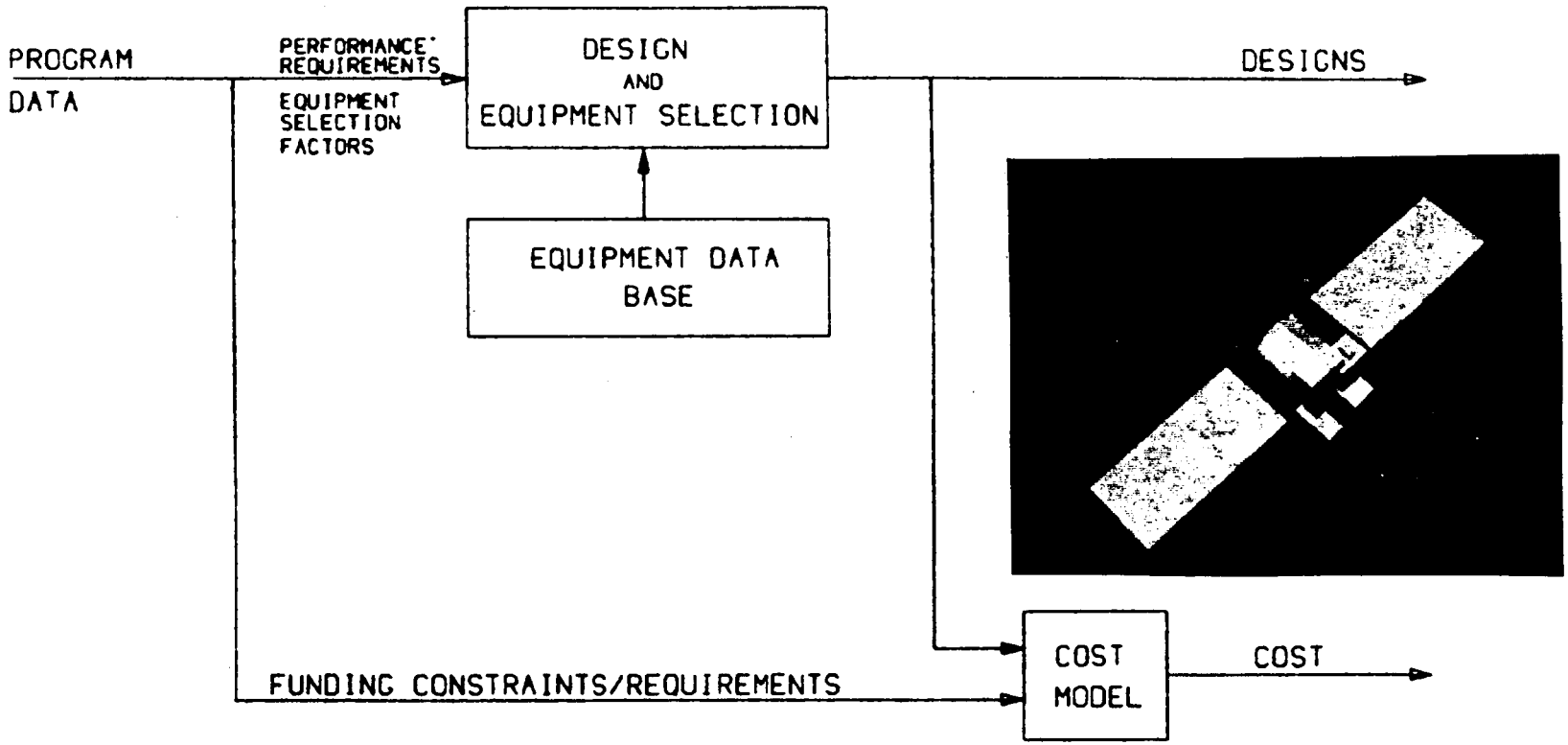

FIGURE B1. SPACE SYSTEMS COMPUTER-AIDED DESIGN AND COST

which are organized in the IDEAS data base by spacecraft subsystem. The program executes one subsystem at a time by solving the design problem for performance requirements that meet the input mission and science requirements. The equipment data base is sorted through one subsystem at a time to select components which permit the subsystem performance to equal or exceed the desired mission and science requirements. The cost required to design, build and operate each vehicle are estimated by summing up the individual cost allocations based on each end item component specified as part of the particular design. For this study, no cost elements were provided for the science instruments; therefore, costs were generated using cost elements for the spacecraft bus only. A 1987 pricing baseline was utilized.

Figure B2 shows the expanded detail of the subsystem design process. It summarizes the inputs required from the program user, and shows the internal data product flow from subsystem to subsystem. Note that the Mission Science Equipment is an input provided by General Electric Company for the AOS study. Any other input data that the computer requires in order to operate (whether a fixed value or a range or guideline) is provided by the program user, if it is known precisely or can be estimated. The computer supplies initial or default

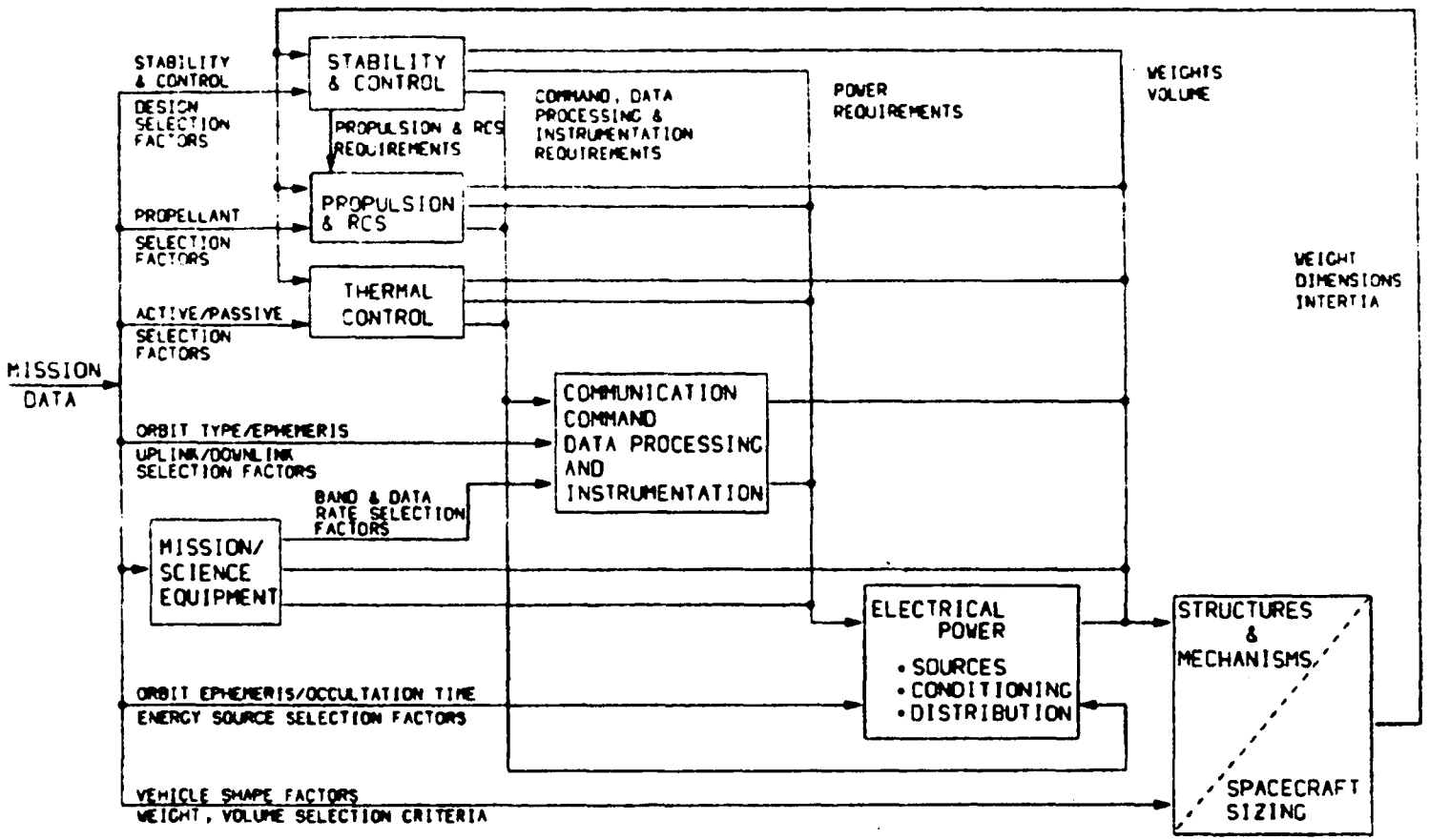

FIGURE B2. SPACECRAFT SUBSYSTEM DESIGN

values for situations where no input guidance is provided. The execution of the program proceeds from stability and control subsystems (top left of diagram) through propulsion, thermal, communications, electrical subsystems to the structures and mechanisms subsystem (bottom right of diagram).

The first subsystem to execute is the stabilization and control (S&C) subsystems which computes the vehicle weight, dimensions, moment of inertia, environmental torques and momentum absorption requirements. These data are passed on to the auxiliary propulsion subsystem (APS) to size the reaction control elements such as propellant mass, thruster and tankage components.

The thermal control subsystem sizes either an active or passive subsystem configuration, or a combination of both, based on user input configuration choice. The design of the data processing (DP) subsystem requires knowledge of the telemetry and data processing requirements for each piece of equipment selected for each subsystem from the data base. The communication subsystem design requires data products from the DP subsystem as well as command and control requirements to perform a radio frequency (rf) link analysis. The link analysis forms the basis for the communication subsystem design.

APPENDIX B

Power load requirements are derived from the science package requirements and the power requirements of the selected data base equipment. These data are summed and used to size the electrical power (EP) subsystem elements such as the solar array and the number of batteries, and also to determine the capacity requirements for equipments such as voltage regulators and battery chargers. The structure subsystem design is based upon the weight, dimensions and vehicle inertias which are derived from the volume and weight of the selected subsystem components as well as the vehicle orbital environment.

Since the execution path from S&C through structures results in addition or modification to overall vehicle characteristics, the loop as depicted by Figure B2 must be repeated until design convergence is achieved. Once design convergence has occurred, the design is costed out using cost estimating relationships (CER) which rely on the cost of components chosen from the data base and CER's that take into consideration weight, power consumption and performance. The three main system cost elements computed are design, development, test and engineering (DDT&E), spacecraft recurring costs and operations cost.

TABLE B1. SUBSYSTEM CONFIGURATION CHOICES

ENTER SANDC CONFIGURATION DESIRED 1 - DUAL SPIN 2 - YAW SPIN 3 - MASS EXPULSION 4 - MASS EXPULSION W/ CMG-S 5 - MASS EXPULSION W/ M.W.-S 6 - MASS EXP. W/ MAG.TOR. 7 - MASS EXP. W/ MAG.TOR. & M.W.-S 8 - MAGNETIC TORQUE 9 - MAG. TOR. W/ CMG-S 10 - MAG. TOR. W/ M.W.-S 11 - MAG. TOR. W/ CMG-S & M.W.-S 12 - CONTROL MOMENT GYROS 13 - CMG-S W/ MASS EXP. & M.W.-S 14 - CMG-S W/ MASS EXP. & MAG. TOR. 15 - CMG-S W/ MASS EXP., MAG. TOR., M.W.-S	STABILITY AND CONTROL
7 ENTER AUXPRO CONFIGURATION DESIRED 1 - COLD GAS 2 - MONPROPELLANT 3 - BIPROPELLANT	AUXILIARY PROPULSION AND RCS
2 ENTER DPI CONFIGURATION DESIRED 1 - GENERAL PURPOSE PROCESSOR 2 - SPECIAL PURPOSE PROCESSOR	DATA PROCESSING AND INSTRUMENTATION
1 ENTER COMM CONFIGURATION DESIRED 1 - SEPARATE UPLINK & DOWNLINK 2 - UNIFIED LINK-COMMON ANTENNAS 3 - UNIFIED LINK-SEPARATE ANTENNAS 4 - UNIFIED LINK-COMMON ANT + DOWNLINK 5 - UNIFIED LINK-SEPARATE ANT + DOWNLINK	COMMUNICATIONS
2 ENTER EP CONFIGURATION DESIRED 1 - SHUNT REGULATION - PADDLE MTD 2 - SHUNT REGULATION - BODY MTD 3 - SHUNT + DISCH.REG - PADDLE MTD 4 - SHUNT + DISCH.REG - BODY MTD 5 - SERIES LOAD REG. - PADDLE MTD 6 - SERIES LOAD REG. - BODY MTD 7 - NUCLEAR POWER	ELECTRICAL POWER
5 ENTER VESIZE CONFIGURATION DESIRED 1 - CYLINDER 2 - BOX 3 - SPHERE	SPACECRAFT SIZING, STRUCTURES AND MECHANISMS
1	

APPENDIX B

SUBSYSTEM CONFIGURATIONS FOR AOS MISSIONS

In designing interactively with a computer as in designing in the traditional fashion, "designer's choice" means that there are multiple solutions to each design problem. In the case of the two AOS designs the different choices are important only if the technology assessment produces greatly different technology needs. A preliminary evaluation during the design process and another evaluation after the technology assessment showed that designer choices were not particularly sensitive to technology needs (see Section 6 of the main report).

Opportunities for design choices occur throughout the design process, but the first, and probably the most crucial, design choices occur early--in the selection of subsystem configurations. For the AOS missions, subsystem configurations were selected from the list of configuration modeling choices defined in Table B1. With the exception of S&C, the subsystem configurations for Missions 5 and 6 were chosen to be the same. The S&C configuration for Mission 5 was chosen to use momentum wheels with a mass expulsion system for momentum dumping. Since Mission 6 was a low Earth orbit mission, and was a physically larger spacecraft, control moment gyros were required with a mass expulsion system for momentum dumping. Magnetic torquers

were also added to aid the vehicle torquing requirements for the purpose of minimizing propellant requirements.

The auxiliary propulsion system was selected to use monopropellant hydrozine fuel as its mass expulsion gas. The multimission modular spacecraft (MMS) data system was used to model the data processing system and utilized a general purpose central computer. The communications system utilized the NASA unified S-band communications link with a common antenna for uplink and downlink. The electrical system was chosen to be a series regulation design utilizing paddle-mounted solar arrays. The bus structural configuration was chosen to be a shuttle compatible cylinder design.

APPENDIX B

GEOSYNCHRONOUS MISSION SPACECRAFT (MISSION NO. 5)

Mission No. 5 builds on the sensor developmental heritage of the previous missions. Its principal feature is the geosynchronous orbit which permits the frequent observation of global atmospheric phenomena over long periods of time. The sensor package includes a gas filter radiometer, a photopolarimeter, a multispectral linear array, an interferometric spectrometer and a laser heterodyne spectrometer. For the geosynchronous mission these sensors use larger optics and multiple detector elements. This payload complement's characteristics and support requirements are shown in Table B2. (A sketch of the payload (or mission equipment) layout was shown in the main text Figure 5.1-1.)

TABLE B2.- MISSION 5 SENSOR PACKAGE

Sensor Characteristics	
Weight:	890 kg plus 400 kg for detectors and optics refrigerator
Mounting Area:	4.6 m^2 plus 1.1 m^2 for detectors and optics refrigerator
L.O.S. Orientation:	Nadir
Support Requirements	
Power:	1.635 watts plus 500 watts for detectors and optics refrigerator
Thermal Requirements:	Passive cooling of electronics and structure
Attitude Control Stability:	$\pm 0.016^{\circ}$
Knowledge of Pointing:	Within 0.004°
Data Rate:	>100 K bits/sec
Orbital Altitude	36,127 km (4°/day drift)
Orbital Inclination:	$\sim 0^{\circ}$

For Mission No. 5, the performance requirements inputs and the subsystem configuration selections are given in the computer printouts designated as Tables B3 through B10.

TABLE B3. MISSION INPUT DATA

```
        GEO LOWER ATMOSPHERIC RESEARCH SPACECRAFT MISSION 5
       MISSION   DATA
    19320.       1  APOGEE - ORBIT APOGEE                                [500.0]
    10.000       2  CA     - AXIAL LAUNCH ACCELERATION   (G)            [ 10.0]
    5.0000       3  CE     - LATERAL LAUNCH ACCELERATION  (G)           [  5.0]
    180.00       4  DIAMAX - MAXIMUM SATELLITE DIAMETER    (IN)        [ 120.]
   0.10000E+11   5  OMEGR  - SPIN RATE OF ROTOR                         [ 1.E10]
   0.00000       6  OPSMS  - NUMBER OF MISSION OPS          (OPS/SEC)  [    0 ]
   0.00000       7  ORBINC - ORBITAL INCLINATION     (DEG)             [-360.]
   0.10000E-01   8  PDOTAV - AVG BODY RATE LO ORBIT CMG ONL(DEG/SEC)   [     .01]
   0.12000E-01   9  PDOTRX - REQUIRE SYSTEM RATE ACC. X     (DEG/SEC)  [    .012]
   0.12000E-01  10  PDOTRY - REQUIRE SYSTEM RATE ACC. Y     (DEG/SEC)  [    .012]
   0.12000E-01  11  PDOTRZ - REQUIRE SYSTEM RATE ACC. Z     (DEG/SEC)  [    .012]
    19320.      12  PERIGE - ORBIT PERIGE    (NMI)                     [   500.]
    50000.      13  SLBMX  - MAXIMUM SYSTEM WEIGHT    (LBS)            [50000.]
    24.000      14  T      - MISSION LIFETIME (MO)                     [  24]
    10.000      15  TPMIN  - MIN P/L SCAN PERIOD                (SEC) [ 10.0]
    3500.0      16  TSMALL - MAIN ENGINE BURN TIME    (SEC)            [  100.]
    24.000      17  TSTAB  - PERIOD OF ACTIVE STABILIZATION            [    0.]
              0 18  IELORB - 12-HR ELLIPT. ORBIT                       [   0]
              1 19  ISATOR - ORIENTATI N  1-EO  2-SO  3-IO             [   1]
              1 20  MOD    - 0-EXPENDABLE SATELLITE  1-MODULARIZED     [    0]
              3 21  MODEOB - NUMBER OF MODULES IN EQUIPMENT BAY        [    0]
              0 22  NADIR  - NADIR COVERAGE FLAG                       [    0]
              1 23  NFV    - NUMBER OF FLIGHT VEHICLES                 [   4]
              0 24  NQV    - NUMBER OF QUAL VEHICLES                   [   1]
              1 25  NSHTL  - 1 - SATELLITE FLOWN ON SHUTTLE            [   0]
ENTER 0 IF INPUT IS OK,
      1 TO CHANGE DATA ITEMS VIA THE KEYBOARD,
      2 TO ENTER A NEW TITLE,
      OR 0 TO RETURN TO EXEC.
```

TABLE B4. MISSION/SCIENCE EQUIPMENT INPUT DATA

```
        GEO LOWER ATMOSPHERIC RESEARCH SPACECRAFT MISSION 5
       MIS EQ.   DATA
    2844.0       1  EQM1WT - MISSION EQUIPMENT WEIGHT        (LB)    [ 435.]
   0.00000       2  EQM2WT - MISSION EQUIPMENT WEIGHT        (LB)    [   0.]
   0.00000       3  EM1YCG - MISSION EQ. 1 CG  Y-CG           (IN)    [   0.]
   0.00000       4  EM1ZCG - MISSION EQ. 1 CG  Z-CG           (IN)    [   0.]
   0.00000       5  EM2YCG - MISSION EQ. 2 CG  Y-CG           (IN)    [   0.]
   0.00000       6  EM2ZCG - MISSION EQ. 2 CG  Z-CG           (IN)    [   0.]
    52.000       7  EQM1XL - MISSION EQ. 1 LENGTH             (IN)    [1.E10]
    57.000       8  EQM1YL - MISSION EQ. 1 WIDTH              (IN)    [1.E10]
    79.000       9  EQM1ZL - MISSION EQ. 1 HEIGHT             (IN)    [1.E10]
   0.00000      10  EQM2XL - MISSION EQ. 2 LENGTH              (IN)   [1.E10]
   0.00000      11  EQM2YL - MISSION EQ. 2 WIDTH               (IN)   [1.E10]
   0.00000      12  EQM2ZL - MISSION EQ. 2 HEIGHT              (IN)   [1.E10]
    2135.0      13  EPME   - MISSION EQUIPMENT POWER REQUIRMENT (WT)  [ 200.]
    3500.0      14  PMAXME - MISSION EQ. MAXIMUM POWER REQUIRED (WT)  [   0.]
   0.00000      15  PMINME - MISSION EQ. MINIMUM POWER REQUIRED (WT)  [   0.]
    200.00      16  TMAXME - MISSION EQ. MAXIMUM TEMPERATURE  (DEG)   [ 200.]
   0.00000      17  TMINME - MISSION EQ. MINIMUM TEMPERATURE  (DEG)   [   0.]
   0.00000      18  XMER   - MISSION EQ. DDT+E COST                   [   0.]
   0.00000      19  XMEU   - MISSION EQ. AVERAGE COST                 [   0.]
              2 20  IMETYP - MISSION EQ. TYPE 1-COM,2-EO,3-LUN,4-PL   [    2]
              0 21  ITHOPT - MISSION EQ. IS INCLUDED IN THRML IF-1    [    0]
              2 22  MB12SH - MISSION EQ. BAY SHAPE  1-CYLINDER  2-BOX[    1]
              1 23  NMSEQ  - MISSION EQ. TT+C DATA ARRAYS             [    1]
ENTER 0 IF INPUT IS OK,
      1 TO CHANGE DATA ITEMS VIA THE KEYBOARD,
      2 TO ENTER A NEW TITLE,
```

GEO LOWER ATMOSPHERIC RESEARCH SPACECRAFT MISSION 5

SANDC DATA

5	1	ISTRT1	- FIRST ALLOWABLE CONFIGURATION FOR SANDC	[1]
5	2	IEND1	- LAST ALLOWABLE CONFIGURATION FOR SANDC	[5]
1	3	K	- AXIS RELATIVITY (DUAL-SPIN)	[1]
2	4	INOSE	- 0-AUTO 1-FORWARD 2-DOWN 3-SIDEWAYS	[0]
1	5	IWHEEL(1)	X REACTION WHEEL 1-YES 0-NO	[1]
1	6	IWHEEL(2)	Y REACTION WHEEL 1-YES 0-NO	[1]
1	7	IWHEEL(3)	Z REACTION WHEEL 1-YES 0-NO	[1]
0.50000E-01	8	AX	- MISALIGN ERR IN MOUNT INERT UNIT X-AXIS	[.05]
0.50000E-01	9	AY	- MISALIGN ERR IN MOUNT INERT UNIT Y-AXIS	[.05]
0.50000E-01	10	AZ	- MISALIGN ERR IN MOUNT INERT UNIT Z-AXIS	[.05]
0.25000	11	DPHI	- MAIN ENGINE ALIGNM TO THRUSTERAXIS (DEG)	[.25]
0.10000	12	EA	- ANTENNA MISALIGNMENT (PM ONLY) (DEG)	[.10]
0.10000	13	EANT	- ANTENNA ELEVATION (PM ONLY) (RAD)	[.10]
0.10000E-03	14	EP1	- MAX. PGM PITCH RATE (3-AXIS) (DEG/SEC)	[.0001]
40.000	15	PHIFOV	- MAX RNG ATT FROM TRK STAR (CMG)(DEG)	[40.0]
0.25000	16	PHIRX	- REQUIRED ROLL ACCURACY (DEG)	[.75]
0.25000	17	PHIRY	- REQUIRED ROLL ACCURACY (DEG)	[.75]
0.25000	18	PHIRZ	- REQUIRED ROLL ACCURACY (DEG)	[.75]
0.66700E-01	19	PDOTST	- MAX RATE STAR RATE INFORMATION (DEG/SEC)	[.0667]
1.0000	20	PDOTX	- MAXIMUM MANV. RATE X (DEG/SEC)	[1.]
1.0000	21	PDOTY	- MAXIMUM MANV. RATE Y (DEG/SEC)	[1.]
1.0000	22	PDOTZ	- MAXIMUM MANV. RATE Z (DEG/SEC)	[1.]
1.0000	23	PDOT0	- MAXIMUM INITIAL RATE (DEG/SEC)	[1.]
0.10000E+11	24	TACCEL	- ACCELLERATION TIME FOR MANV (CMG) (SEC)	[1.E10]
180.00	25	THETMX	- MAXIMUM MANV. ANGLE (CMG ONLY) (DEG)	[180.0]
0.10000E+06	26	THOLD	- TIME VEHICLE INERT HOLD (CMG) (MIN)	[1.0E+5]
1.0000	27	TL	- TIME BETWEEN UNLOAD MOM WHL (CMG) (DAY)	[1.0]
1.0000	28	XN	- NUMBER MANV ABOUT ROLL AXIS	[1.]
4.0000	29	XNNN	- NUMBER OF SINGLE GIMBAL GYROS (CMG)	[4.]
3.0000	30	XNU	- CONTROL SYSTEM EFFICIENCY	[3.]
1.0000	31	YN	- NUMBER MANV ABOUT PITCH AXIS	[1.]
1.0000	32	ZN	- NUMBER MANV ABOUT YAW AXIS	[1.]

TABLE B6. AUXILIARY PROPULSION AND RCS INPUT DATA

GEO LOWER ATMOSPHERIC RESEARCH SPACECRAFT MISSION 5

AUXPRO DATA

2	1	ISTRT2	- FIRST ALLOWABLE CONFIGURATION FOR AUXP	[1]
2	2	IEND2	- LAST ALLOWABLE CONFIGURATION FOR AUXPRO	[3]
0	3	IBLOON	- BLOW-DOWN AUX. POWER 0-NO 1-YES	[0]
12.000	4	ALPHA	- THRUSTER OFF-SET IN ROLL-YAW (DEG)	[12.0]
5.0000	5	FE	- TRANSTIONAL THRUST (>ZERO) (DEG)	[4.1]
20.000	6	FEMAX	- MAXIMUM FE (DEG)	[20.0]
0.50000	7	FEMIN	- MINIMUM FE (DEG)	[0.5]

TABLE B7. DATA PROCESSING AND INSTRUMENTATION INPUT DATA

GEO LOWER ATMOSPHERIC RESEARCH SPACECRAFT MISSION 5

DPI DATA

1	1	ISTRT3	- FIRST ALLOWABLE CONFIGURATION FOR DPI	[1]
1	2	IEND3	- LAST ALLOWABLE CONFIGURATION FOR DPI	[2]
10	3	IRF	- RECORDING FREQUENCY	[10]
1	4	ITRFL	- TAPE RECORDERS REQUIRED 1-YES	[1]
900.00	5	TD	- TAPE RECORDER DUMP TIME REQUIRED (SEC)	[900.]
0.00000	6	TPRFL	- TELEMETRY PROGRAM FLAG 0-SEPARATE	[0.]
5100.0	7	TST	- TAPE RECORDER STORE TIME REQUIIRED(SEC)	[5100.]

TABLE B8. COMMUNICATIONS INPUT DATA

```
GEO LOWER ATMOSPHERIC RESEARCH SPACECRAFT MISSION 5
COMM        DATA
          2  1  ISTRT4 - FIRST ALLOWABLE CONFIGURATION FOR COMM  [     1]
          2  2  IEND4  - LAST ALLOWABLE CONFIGURATION FOR COMM   [     5]
          1  3  IRMOD  - 1-PHASE MODULATION 2-FREQ MODULATION    [     1]
          1  4  ICMMND -
          1  5  ICOVER -
          1  6  ICOPLN - GROUND PLANE FLAG
          1  7  IOPTCM - RANGING REQUIREMENT   0-NO,  1-YES      [     0]
0.10000E+07  8  BTRMX  - MAXIMUM BIT RATE    (BIT/SEC)           [1.024E+6]
-1000.0      9  BWIDTH(1) BANDWIDTH FOR XMTR(S)          (HZ)   [-1000.0]
-1000.0     10  BWIDTH(2) BANDWIDTH FOR XMTR(S)          (HZ)   [-1000.0]
 1000.0     11  COMRAT - RECEIVER COMMAND RATE            (BAUD) [ 1000.0]
 2250.0     12  FREQ(1)- FREQUENCY OF DOWNLINK XMTR(S)    (MHZ)  [ 2250.0]
 2250.0     13  FREQ(2)- FREQUENCY OF DOWNLINK XMTR(S)    (MHZ)  [ 2250.0]
 2250.0     14  FREQ(3)- FREQUENCY OF DOWNLINK XMTR(S)    (MHZ)  [ 2250.0]
-1000.0     15  RFREQ  - RECEIVER FREQUENCY               (MHZ)  [-1000.0]
0.00000     16  SCSFL  - SPECIAL COMMAND SYNC. FLAG    0-NO,1-YES[      0]
```

TABLE B9. ELECTRICAL POWER INPUT DATA

```
GEO LOWER ATMOSPHERIC RESEARCH SPACECRAFT MISSION 5
EP          DATA
          5  1  ISTRT5 - FIRST ALLOWABLE CONFIGURATION FOR EP    [     1]
          5  2  IEND5  - LAST ALLOWABLE CONFIGURATION FOR EP     [     6]
          0  3  ISAW   - NONZERO IMPLIES ROLL-UP SOLAR ARRAY USED[     0]
          1  4  ISBOFG - SOLAR ARRAY BOOM DRIVER REQ.  0-NO,1-YES[     0]
          2  5  NPANEL - NUMBER OF SOLAR PANELS NEEDED           [     2]
 1.1000      6  BCM    - BATTERY CAPACITY MARGIN FACTO R (AMP-HR)[   1.1]
0.13000      7  ETAI   - SOLAR CELL EFFICIENCY                   [     0]
 15.000      8  OPTEMP - BATTERY TEMPERATURE            (DEG C)  [   15.]
 24.000      9  SABOLG - SOLAR ARRAY BOOM LENGTH         (IN)    [   24.]
0.21300     10  SABWF  - SOLAR ARRAY BOOM WEIGHT FACTOR           [  .213]
 3.4000     11  SAWF   - SOLAR ARRAY WEIGHT FACTOR                [     0]
 96.000     12  SAWIDTH- SOLAR ARRAY WIDTH             (FT)     [    96]
 28.000     13  VMB    - MINIMUM BUS VOLTAGE            (VOLTS)  [   28.]
 2.0000     14  XCGSA1 - LOC. OF SOLAR ARRAY PANELS 1-F,2-C,3-A  [    1.]
 1.0000     15  XCGSA3 - LOC. OF BODY MOUNTED SA 1-F,2-3-A       [    1.]
```

TABLE B10. SPACECRAFT SIZING, STRUCTURES AND MECHANISMS INPUT DATA

```
GEO LOWER ATMOSPHERIC RESEARCH SPACECRAFT MISSION 5
VESIZE      DATA
          1  1  ISTRT6 - FIRST ALLOWABLE CONFIGURATION FOR VESIZE[     1]
          1  2  IEND6  - LAST ALLOWABLE CONFIGURATION FOR VESIZE [     3]
          1  3  MANV   - VEHICLE SKEWING FLAG                    [     1]
          0  4  MODSAT - NUMBER OF MODULES ON SATELLITE          [     0]
 8.1460      5  EOPF   - VOLUME SIZING FACTOR                    [  4.95]
0.00000      6  RLD    - RATIO OF VEHICLE LENGTH TO DIAMETER     [    .6]
 400.00      7  WTMOD  - AVERAGE WEIGHT PER MODULES         (LBS)[ 250.]
```

APPENDIX B

The results for Conceptual Design No. 1 for a "Geosynchronous Lower Atmospheric Research Spacecraft" to satisfy the requirements of Mission No. 5 are given in the computer printouts for the overall spacecraft design (Table B11), the subsystem designs (Tables B12 and B13) and the component and assembly descriptions (Table B14). A computer generated sketch of this spacecraft design is shown as Figure B3. The sketch illustrates that the sensor payload with its multiple fields-of-view can be easily accommodated, and the power demand can be met with a reasonably sized solar array. Existing spacecraft concepts, such as an upgraded MMS, apparently can do the job, and consequently, new spacecraft designs are not required to satisfactorily perform Mission No. 5. See Section 6 for the results of the assessment of spacecraft technology needs.

TABLE B11. SPACECRAFT SYSTEM DESIGN DESCRIPTION

STABILIZATION AND CONTROL

CONFIGURATION - - MASS EXPULSION WITH MOMENTUM WHEELS

POINTING ACCURACY = 0.250000(DEG.)

AUXILIARY PROPULSION

CONFIGURATION - - MONOPROPELLANT

TOTAL IMPULSE = 26934.(LB-SEC)

DATA PROCESSING AND INSTRUMENTATION

CONFIGURATION - - GENERAL PURPOSE PROCESSOR

COMPUTER OPERATIONS RATE = 12600.(IPS)

COPI TABLE	ENGINEERING DATA	MISSION EQUIPMENT DATA
NUMBER OF COMMANDS	128.	0.
NUMBER OF MAIN FRAME WORDS	128.	0.
MAIN FRAME SAMPLE RATE	62.	0.
MAIN FRAME WORD LENGTH	16.	0
NUMBER OF SUBFRAMES	3.	0.
SUBFRAME RATE	1.5000	0.0000
NUMBER OF WORDS PER SUBFRAME	32.	0.

COMMUNICATIONS

CONFIGURATION - - UNIFIED LINK-COMMON ANTENNAS

PRIMARY DOWNLINK DATA RATE = 128.000(KBPS)

SEPARATE DOWNLINK DATA RATE = 0.000(KBPS)

ELECTRICAL POWER

CONFIGURATION - - SERIES LOAD REGULATION - PADDLE MOUNTED SOLAR ARRAY

POWER REQUIREMENT 2468.69 WATTS

********** 2 PANEL CONFIGURATION**********

TOTAL SOLAR ARRAY AREA 267.54 SQ FT

SOLAR ARRAY EFFICIENCY 0.13

ARRAY WEIGHT FACTOR 3.40 KG/(M**2)

INSTALLED BATTERY CAPACITY 300.00 AMP-HR

SOLAR ARRAY AND BOOM VARIABLES

NUMBER OF PANELS: 2

PADDLE WIDTH 96.000 (INS)

ARRAY BOOM LENGTH. 24.000 (INS),

BOOM MATERIAL WEIGHT FACTOR 0.213

VEHICLE SIZING

CONFIGURATION - - CYLINDER

WET SATELLITE WEIGHT = 6944.6 LBS (3150.0 KG) LAUNCH WEIGHT = 7177.7 LBS (3255 7 KG)

DIMENSIONS	LENGTH	HEIGHT	WIDTH
EQUIPMENT BAY	62.0 IN.(1.57 M)	77.5 IN.(1.97 M)	77 5 IN (1 97 M)
MISSION EQUIPMENT	52.0 IN.(1.32 M)	79.0 IN.(2.01 M)	57.0 IN (1 45 M)
TOTAL SATELLITE	114.0 IN.(2.89 M)		

MOMENTS OF INERTIA (SLUGS*FT**2) IXX = 99512.6 IYY = 89130.9 IZZ = 135078 1

	X-CG	Y-CG	Z-CG
CENTER OF GRAVITY	56.7 IN.(1.44 M)	-0.0 IN.(-0.00 M)	0.0 IN.(0.00 M)

WEIGHT SUMMARY

COMPONENTS	2110.3
PROPELLANT	153.0
SOLAR ARRAY	186.3
HARNESS	528.9
STRUCTURE	553.6
SOLAR ARRAY DRIVE	30.9
SOLAR ARRAY BOOM	15.2
THERMAL CONTROL	265.3
SATELLITE ADAPTER	233.1
MISSION EQUIPMENT	2844.0
TOTAL LAUNCH WEIGHT	7177.7

TABLE B12. DESIGN DESCRIPTIONS OF SUBSYSTEMS

```
STABILIZATION AND CONTROL

  CONFIGURATION - - MASS EXPULSION WITH MOMENTUM WHEELS

  EQUIPMENT CODE IDENTIFIER  203 1003 1501 2103 1305  303  306 1801
  EQUIPMENT QUANTITIES         1    1    1    1    1    1    1    1
            WEIGHT   143.30 LBS       VOLUME      4.43(FT**3)     POWER REQUIREMENT    59.4 WATTS
            DES. ENG. COST    1856789.8          TEST + EVAL. COST       805349.8
            UNIT PROD.COST    1828101.9          UNIT ENG.    COST           -0.0
            RELIABILITY          0.9164

AUXILIARY PROPULSION

  CONFIGURATION - - MONOPROPELLANT

  EQUIPMENT CODE IDENTIFIER  834  834  906 1003  499  203 1109  503 1203  603
  EQUIPMENT QUANTITIES         6    2    4    9    1    1    2    1    1    1
            WEIGHT   217.82 LBS       VOLUME      5.27(FT**3)     POWER REQUIREMENT    41.0 WATTS
            DRY WEIGHT       64.86(LBS), EXPENDABLE WEIGHT      152.95(LBS)
            DES. ENG. COST     820123.2          TEST + EVAL. COST       470869.5
            UNIT PROD.COST     517225.4          UNIT ENG.    COST        50514.5
            RELIABILITY          0.8782

DATA PROCESSING AND INSTRUMENTATION

  CONFIGURATION - - GENERAL PURPOSE PROCESSOR

  EQUIPMENT CODE IDENTIFIER  103  203  333  406
  EQUIPMENT QUANTITIES         2    2    2    1
            WEIGHT    60.50 LBS       VOLUME      1.98(FT**3)     POWER REQUIREMENT    75.9 WATTS
            DES. ENG. COST    2258797.7          TEST + EVAL. COST      4156600.8
            UNIT PROD.COST    1505826.6          UNIT ENG.    COST       329487.3
            RELIABILITY          0.8808

COMMUNICATIONS

  CONFIGURATION - - UNIFIED LINK-COMMON ANTENNAS

  EQUIPMENT CODE IDENTIFIER  230  101  306  401  503  601
  EQUIPMENT QUANTITIES         1    2    2    2    1    2
            WEIGHT   165.88 LBS       VOLUME      2.70(FT**3)     POWER REQUIREMENT    52.0 WATTS
            DES. ENG  COST    1273921.8          TEST + EVAL. COST       844037.8
            UNIT PROD.COST    2982869.7          UNIT ENG.    COST       257060.3
            RELIABILITY          0.6976

ELECTRICAL POWER

  CONFIGURATION - - SERIES LOAD REGULATION - PADDLE MOUNTED SOLAR ARRAY

  EQUIPMENT CODE IDENTIFIER  822  207  906 1003 1102
  EQUIPMENT QUANTITIES         2    6    6    1    1
            WEIGHT  1675.71 LBS       VOLUME      6.62(FT**3)     POWER DISSIPATION   478.5 WATTS
            HARNESS WEIGHT      528.9(LBS), SOLAR ARRAY WEIGHT      186.3(LBS)
            DES. ENG. COST    6769829.8          TEST + EVAL. COST      4366558.9
            UNIT PROD.COST    4521984.8          UNIT ENG.    COST           -0.0
            RELIABILITY          0.9580
            ARRAY EFFICIENCY     0.13
MISSION EQUIPMENT

            WEIGHT  2844.00 LBS       VOLUME    135.51(FT**3)     POWER REQUIREMENT  2135.0 WATTS
            DDT+E COST              0.0         AVERAGE UNIT COST           0.0
            RELIABILITY          0.6498
```

TABLE B13. DESIGN DESCRIPTIONS OF SUBSYSTEMS

THERMAL CONTROL

RADIATOR AREA	147.8 (FT**2),	BATTERY RADIATOR AREA	1.0 (FT**2)
		TOTAL RADIATOR AREA	148.8 (FT**2)
HEATER POWER	7858.8(BTU/HR),	BATTERY HEATER POWER	79.5(BTU/HR)
		TOTAL HEATER POWER	7938.3(BTU/HR)
HEAT PIPE	202407.8(WATT-IN),	VARIABLE CONDUCTANCE H.P.	1346.2(WATT-IN)
HEAT PIPE LENGTH	7.1 (FT)	AVERAGE HEAT LOAD	8075.3 (BTU/HR)
STORED ENERGY	132.4 (BTU)		

THERMAL CONTROL WEIGHT

	UNIT WEIGHT (LBS)
INSULATION	23.3
HEAT PIPES	7.5
PHASE CHANGE MATERIAL	3.3
RADIATOR (ACTIVE)	231.3

TOTAL	265.3

DES. ENG. COST	2515546.1	TEST + EVAL. COST	478626.2
UNIT PROD.COST	395453.7	UNIT ENG. COST	-0.0
IERR	1100110111		

STRUCTURES

SKIN THICKNESS	0.037 (IN)						
STRINGER NO. ,THICKNESS ,HT.	133.	,	81893.593 (IN),				0.617 (IN)
FRAME NO. ,THICKNESS ,HT.	6.	,	0.177 (IN),				0.886 (IN)
GRID BEAM THICKNESS	0.330 (IN),	SPACING	9.299 (IN),	HEIGHT	4.649 (IN)		
ENDCOVER THICKNESS- FORWARD	0.030 (IN),	CENTER	0.857 (IN),	AFT	0.030 (IN)		
EQUIPMENT BAY STRUCTURE WT.	681.6 (LBS)						
SOLAR ARRAY BOOM AND DRIVE WT.	46.1 (LBS)						
ADAPTER WEIGHT	233.1 (LBS)						

(EQUIP. BAY STRUCT. WEIGHT INCLUDES 208.9 LBS. FOR MODULARITY)

DES. ENG. COST	7650424.4	TEST + EVAL. COST	3527153.9
UNIT PROD.COST	2519155.4	UNIT ENG. COST	-0.0

TABLE B14. SUBSYSTEM COMPONENTS AND ASSEMBLY DESCRIPTIONS

STABILIZATION AND CONTROL

IDENT	TYPE	NO.	UNIT WEIGHT	UNIT VOLUME	UNIT POWER	D.E. COST	T.E. COST	VEHICLE PROD. COST	VEHICLE ENG. COST
203	VALVE DRIVER	1	1.6	0.1	5.9	0.0	0.0	0.0	0.0
1003	DRIVE CNTRL	1	2.4	1.0	4.0	0.0	0.0	0.0	0.0
1501	CONTROL ELEC	1	10.0	0.1	4.0	1316809.9	488669.9	610584.7	-0.0
2103	STAR TRACKER	1	10.0	0.5	5.5	148200.0	94770.0	321727.3	-0.0
1305	REACTION WHE	1	88.0	2.3	20.0	219440.0	111800.0	241046.5	-0.0
303	COARSE SUN S	1	5.7	0.1	1.0	0.0	0.0	80348.8	0.0
306	FINE SUN SEN	1	3.8	0.1	1.0	172250.0	110110.0	211330.7	-0.0
1801	INERT. REF.	1	21.8	0.3	18.0	0.0	0.0	363863.8	0.0

AUXILIARY PROPULSION

IDENT	TYPE	NO.	UNIT WEIGHT	UNIT VOLUME	UNIT POWER	D.E. COST	T.E. COST	VEHICLE PROD. COST	VEHICLE ENG. COST
834	THRUSTER	6	1.6	0.0	1.0	30265.6	0.0	83444.8	41903.7
834	THRUSTER	2	1.6	0.0	1.0	21549.1	0.0	32870.0	8610.7
906	LATCH VALVE	4	0.5	0.0	8.0	0.0	0.0	0.0	0.0
1003	FILTER	9	0.1	0.0	0.0	0.0	0.0	0.0	0.0
400	PRESSURE REG	1	4.8	0.4	0.0	0.0	0.0	0.0	0.0
203	ISOLATION VA	1	0.0	0.0	0.0	0.0	0.0	0.0	0.0
1100	TANK	2	12.2	1.3	0.0	0.0	0.0	0.0	0.0
503	TANK	1	12.2	1.3	0.0	0.0	0.0	0.0	0.0
1203	N2H4 FILL/DR	1	1.3	0.0	0.0	0.0	0.0	0.0	0.0
603	GN2 FILL/DRA	1	2.0	0.0	0.0	0.0	0.0	0.0	0.0

DATA PROCESSING AND INSTRUMENTATION

IDENT	TYPE	NO.	UNIT WEIGHT	UNIT VOLUME	UNIT POWER	D.E. COST	T.E. COST	VEHICLE PROD. COST	VEHICLE ENG. COST
103	COMPUTER	2	13.4	0.5	46.4	610462.0	403878.9	175705.3	243032.0
203	STACC CENTRL	2	7.8	0.2	3.0	0.0	135720.0	120086.1	0.0
333	TAPE RECORDE	2	3.5	0.2	10.5	214110.0	130800.0	113700.5	85555.3
406	COMMD DECOD+	1	11.0	0.1	5.5	0.0	170050.9	229425.8	0.0

COMMUNICATIONS

IDENT	TYPE	NO.	UNIT WEIGHT	UNIT VOLUME	UNIT POWER	D.E. COST	T.E. COST	VEHICLE PROD. COST	VEHICLE ENG. COST
230	ANTENNA	1	46.3	0.0	0.0	0.0	0.0	1292387.8	0.0
101	PREMOD. PROC	2	19.0	0.3	3.1	38036.4	37120.0	183773.4	15198.8
306	TRANSMITTER	2	3.6	0.1	16.0	605255.6	393379.9	914384.9	241851.5
401	RECEIVER	2	3.6	0.1	16.0	0.0	0.0	0.0	0.0
503	COMMAND SIG	1	66.9	1.8	0.9	630629.9	413529.9	592323.6	-0.0
601	DIPLEXER	2	0.0	0.0	16.0	0.0	0.0	0.0	0.0

ELECTRICAL POWER

IDENT	TYPE	NO.	UNIT WEIGHT	UNIT VOLUME	UNIT POWER	D.E. COST	T.E. COST	VEHICLE PROD. COST	VEHICLE ENG. COST
822	SERIES LOAD	2	15.0	0.0	0.0	0.0	0.0	0.0	0.0
207	BATTERY	6	183.0	0.7	0.0	2410822.7	2009912.0	1180438.4	-0.0
906	BATTERY CHAR	6	80.0	0.4	0.0	0.0	0.0	0.0	0.0
1003	SOLAR POWER	1	1.0	0.1	0.0	0.0	0.0	0.0	0.0
1102	POWER CONTRL	1	67.0	0.0	0.0	0.0	0.0	0.0	0.0

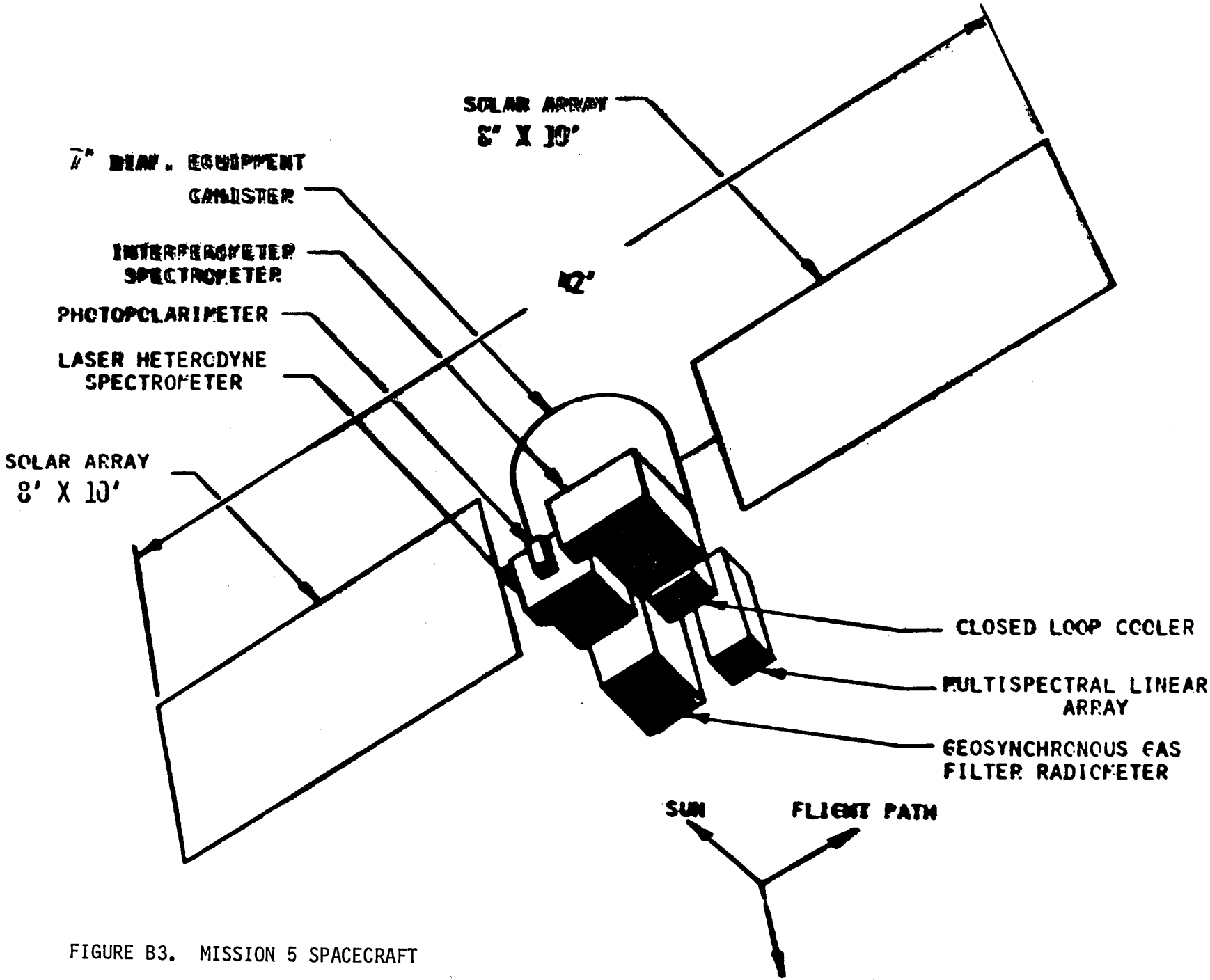

FIGURE B3. MISSION 5 SPACECRAFT

APPENDIX B

ADVANCED LOWER ATMOSPHERIC RESEARCH SATELLITE (MISSION NO. 6)

Mission No. 6 includes both active and passive sensors. It is the first free-flyer mission to incorporate LIDAR systems, one for wind measurements and one for multiple species measurements, thus imposing large weight, power and size requirements on the host spacecraft. These active systems are complemented by a temperature sounder, multispectral linear array, and submillimeter radiometer. The payload complement's characteristics and support requirements are shown in Table B15. The relatively high power requirement shown in the table is for two large telescope LIDARS with six separate and independent lasers.

TABLE B15.- MISSION 6 SENSOR PACKAGE

Sensor Characteristics	
Weight:	3130 kg
Mounting Area:	16.6 m^2
L.O.S. Orientation:	Nadir
Support Requirements	
Power:	17.7 kw
Thermal Requirements:	Passive cooling of electronics and structures
Attitude Control Stability:	$\pm 1^{\circ}$
Knowledge of Pointing:	Within 0.25°
Data Rate:	35 K bits/sec
Orbital Altitude:	520 km
Orbital Inclination:	97.5° (9 a.m. sun-sych.)

For Mission No. 6, the performance requirements inputs and the subsystem configuration selections are given in the computer printouts designated as Tables B15 through B22.

TABLE B15. MISSION INPUT DATA

```
LEO LOWER ATMOSPHERIC RESEARCH SPACECRAFT MISSION 6
MISSION   DATA
 281.00      1  APOGEE - ORBIT APOGEE                                [500.0]
 10.000      2  CA     - AXIAL LAUNCH ACCELERATION   (G)            [ 10.0]
 5.0000      3  CE     - LATERAL LAUNCH ACCELERATION  (G)           [  5.0]
 100.00      4  DIAMAX - MAXIMUM SATELLITE DIAMETER    (IN)        [ 120.]
0.10000E+11  5  OMEGR  - SPIN RATE OF ROTOR                         [ 1.E10]
0.00000      6  OPSMS  - NUMBER OF MISSION OPS          (OPS/SEC) [    0.]
 97.500      7  ORBINC - ORBITAL INCLINATION      (DEG)            [-360.]
0.10000E-01  8  PDOTAV - AVG BODY RATE LO ORBIT CMC ONL(DEG/SEC) [     .01]
0.12000E-01  9  PDOTRX - REQUIRE SYSTEM RATE ACC. X     (DEG/SEC) [    .012]
0.12000E-01 10  PDOTRY - REQUIRE SYSTEM RATE ACC. Y     (DEG/SEC) [    .012]
0.12000E-01 11  PDOTRZ - REQUIRE SYSTEM RATE ACC. Z     (DEG/SEC) [    .012]
 281.00      12  PERIGE - ORBIT PERIGE     (NMI)                    [   500.]
 50000.      13  SLBMX  - MAXIMUM SYSTEM WEIGHT     (LBS)          [50000.]
 24.000      14  T      - MISSION LIFETIME (MO)                     [  24]
 10.000      15  TPMIN  - MIN P/L SCAN PERIOD                (SEC) [ 10.0]
 3500.0      16  TSMALL - MAIN ENGINE BURN TIME     (SEC)           [  100.]
 24.000      17  TSTAB  - PERIOD OF ACTIVE STABILIZATION            [    0.]
          0 18  IELORB - 12-HR ELLIPT. ORBIT                        [   0]
          1 19  ISATOR - ORIENTATI N  1-EO  2-SO  3-IO              [   1]
          1 20  MOD    - 0-EXPENDABLE SATELLITE  1-MODULARIZED      [    0]
          3 21  MODEQB - NUMBER OF MODULES IN EQUIPMENT BAY         [    0]
          0 22  NADIR  - NADIR COVERAGE FLAG                        [    0]
          1 23  NFV    - NUMBER OF FLIGHT VEHICLES                  [   4]
          0 24  NQV    - NUMBER OF QUAL VEHICLES                    [   1]
          1 25  NSHTL  - 1 - SATELLITE FLOWN ON SHUTTLE             [   0]
```

TABLE B16. MISSION SCIENCE EQUIPMENT INPUT DATA

```
LEO LOWER ATMOSPHERIC RESEARCH SPACECRAFT MISSION 6
MIS EQ    DATA
 6082.0      1  EQM1WT - MISSION EQUIPMENT WEIGHT        (LB)    [ 435.]
0.00000      2  EQM2WT - MISSION EQUIPMENT WEIGHT        (LB)    [   0.]
0.00000      3  EM1YCG - MISSION EQ. 1 CG  Y-CG           (IN)    [   0.]
0.00000      4  EM1ZCG - MISSION EQ. 1 CG  Z-CG           (IN)    [   0.]
0.00000      5  EM2YCG - MISSION EQ. 2 CG  Y-CG           (IN)    [   0.]
0.00000      6  EM2ZCG - MISSION EQ. 2 CG  Z-CG           (IN)    [   0.]
 98.000      7  EQM1XL - MISSION EQ. 1 LENGTH              (IN)    [1.E10]
 433.00      8  EQM1YL - MISSION EQ. 1 WIDTH               (IN)    [1.E10]
 165.00      9  EQM1ZL - MISSION EQ. 1 HEIGHT              (IN)    [1.E10]
0.00000     10  EQM2XL - MISSION EQ. 2 LENGTH               (IN)   [1.E10]
0.00000     11  EQM2YL - MISSION EQ. 2 WIDTH                (IN)   [1.E10]
0.00000     12  EQM2ZL - MISSION EQ. 2 HEIGHT               (IN)   [1.E10]
 9200.0     13  EPME   - MISSION EQUIPMENT POWER REQUIRMENT (WT)   [ 200.]
 9000.0     14  PMAXME - MISSION EQ. MAXIMUM POWER REQUIRED (WT)   [   0.]
0.00000     15  PMINME - MISSION EQ. MINIMUM POWER REQUIRED (WT)   [   0.]
 200.00     16  TMAXME - MISSION EQ. MAXIMUM TEMPERATURE   (DEG)   [ 200.]
0.00000     17  TMINME - MISSION EQ. MINIMUM TEMPERATURE   (DEG)   [   0.]
0.00000     18  XMER   - MISSION EQ. DDT+E COST                    [   0.]
0.00000     19  XMEU   - MISSION EQ. AVERAGE COST                  [   0.]
          2 20  IMETYP - MISSION EQ. TYPE 1-COM,2-EO,3-LUN,4-PL   [    2]
          0 21  ITHOPT - MISSION EQ. IS INCLUDED IN THRML IF-1    [    0]
          2 22  MB12SH - MISSION EQ. BAY SHAPE  1-CYLINDER  2-BOX[    1]
          1 23  NMSEQ  - MISSION EQ. TT+C DATA ARRAYS             [    1]
```

TABLE B17. STABILITY AND CONTROL INPUT DATA

```
LEO LOWER ATMOSPHERIC RESEARCH SPACECRAFT MISSION 6
SANDC     DATA
        7  1  ISTRT1 - FIRST ALLOWABLE CONFIGURATION FOR SANDC [     1]
        7  2  IEND1  - LAST ALLOWABLE CONFIGURATION FOR SANDC  [     5]
        1  3  K      - AXIS RELATIVITY (DUAL-SPIN)             [     1]
        2  4  INOSE  - 0-AUTO 1-FORWARD 2-DOWN 3-SIDEWAYS      [     0]
        1  5  IWHEEL(1) X REACTION WHEEL 1-YES 0-NO            [     1]
        1  6  IWHEEL(2) Y REACTION WHEEL 1-YES 0-NO            [     1]
        1  7  IWHEEL(3) Z REACTION WHEEL 1-YES 0-NO            [     1]
0.50000E-01  8  AX     - MISALIGN ERR IN MOUNT INERT UNIT X-AXIS [   .05]
0.50000E-01  9  AY     - MISALIGN ERR IN MOUNT INERT UNIT Y-AXIS [   .05]
0.50000E-01 10  AZ     - MISALIGN ERR IN MOUNT INERT UNIT Z-AXIS [   .05]
0.25000     11  DPHI   - MAIN ENGINE ALIGNM TO THRUSTERAXIS (DEG)[   .25]
0.10000     12  EA     - ANTENNA MISALIGNMENT (PM ONLY)   (DEG)  [    .10]
0.10000     13  EANT   - ANTENNA ELEVATION    (PM ONLY)   (RAD)  [    .10]
0.10000E-03 14  EP1    - MAX. PCM PITCH RATE (3-AXIS)  (DEG/SEC) [.0001]
 40.000     15  PHIFOV - MAX RNG ATT FROM TRK STAR (CMG)(DEG)    [ 40.0]
0.25000     16  PHIRX  - REQUIRED ROLL ACCURACY          (DEG)   [   .75]
0.25000     17  PHIRY  - REQUIRED ROLL ACCURACY          (DEG)   [   .75]
0.25000     18  PHIRZ  - REQUIRED ROLL ACCURACY          (DEG)   [   .75]
0.66700E-01 19  POOTST - MAX RATE STAR RATE INFORMATION (DEG/SEC)[.0667]
 1.0000     20  POOTX  - MAXIMUM MANV. RATE    X         (DEG/SEC)[   1.]
 1.0000     21  POOTY  - MAXIMUM MANV. RATE    Y         (DEG/SEC)[   1.]
 1.0000     22  POOTZ  - MAXIMUM MANV. RATE    Z         (DEG/SEC)[   1.]
 1.0000     23  POOT0  - MAXIMUM INITIAL RATE            (DEG/SEC)[   1.]
0.10000E+11 24  TACCEL - ACCELLERATION TIME FOR MANV (CMG) (SEC) [1.E10]
 180.00     25  THETMX - MAXIMUM MANV. ANGLE  (CMG ONLY)   (DEG) [ 180.0]
0.10000E+06 26  THOLD  - TIME VEHICLE INERT HOLD  (CMG )   (MIN) [1.0E+5]
 1.0000     27  TL     - TIME BETWEEN UNLOAD MOM WHL (CMG) (DAY) [   1.0]
 1.0000     28  XN     - NUMBER MANV ABOUT ROLL AXIS             [   1.]
 4.0000     29  XNNN   - NUMBER OF SINGLE GIMBAL GYROS   (CMG)   [   4.]
 3.0000     30  XNU    - CONTROL SYSTEM EFFICIENCY               [   3.]
 1.0000     31  YN     - NUMBER MANV ABOUT PITCH AXIS            [   1.]
 1.0000     32  ZN     - NUMBER MANV ABOUT YAW AXIS              [   1.]
```

TABLE B18. AUXILIARY PROPULSION AND RCS INPUT DATA

```
LEO LOWER ATMOSPHERIC RESEARCH SPACECRAFT MISSION 6
AUXPRO    DATA
        2  1  ISTRT2 - FIRST ALLOWABLE CONFIGURATION FOR AUXP  [     1]
        2  2  IEND2  - LAST ALLOWABLE CONFIGURATION FOR AUXPRO [     3]
        0  3  IBLOON - BLOW-DOWN AUX  POWER 0-NO  1-YES        [     0]
 12.000     4  ALPHA  - THRUSTER OFF-SET IN ROLL-YAW   (DEG)   [ 12.0]
 5.0000     5  FE     - TRANSTIONAL THRUST   (>ZERO)   (DEG)   [  4 1]
 20.000     6  FEMAX  - MAXIMUM FE    (DEG)                   [ 20.0]
0.50000     7  FEMIN  - MINIMUM FE    (DEG)                   [  0.5]
```

TABLE B19. DATA PROCESSING AND INSTRUMENTATION INPUT DATA

```
LEO LOWER ATMOSPHERIC RESEARCH SPACECRAFT MISSION 6
DPI       DATA
        1  1  ISTRT3 - FIRST ALLOWABLE CONFIGURATION FOR DPI   [     1]
        1  2  IEND3  - LAST ALLOWABLE CONFIGURATION FOR DPI    [     2]
       10  3  IRF    - RECORDING FREQUENCY                     [    10]
        1  4  ITRFL  - TAPE RECORDERS REQUIRED  1-YES          [     1]
 900.00     5  TD     - TAPE RECORDER DUMP TIME REQUIRED (SEC)  [ 900.]
0.00000     6  TPRFL  - TELEMETRY PROGRAM FLAG   0-SEPARATE    [   0.]
 5100.0     7  TST    - TAPE RECORDER STORE TIME REQUIRED(SEC) [5100.]
```

TABLE B20. COMMUNICATIONS INPUT DATA

```
LEO LOWER ATMOSPHERIC RESEARCH SPACECRAFT MISSION 6
COMM      DATA
        2  1  ISTRT4 - FIRST ALLOWABLE CONFIGURATION FOR COMM  [     1]
        2  2  IEND4  - LAST ALLOWABLE CONFIGURATION FOR COMM   [     5]
        1  3  IRMOD  - 1-PHASE MODULATION 2-FREQ MODULATION    [     1]
        1  4  ICMMND -
        1  5  ICOVER -
        1  6  IGOPLN - GROUND PLANE FLAG
        1  7  IOPTCM - RANGING REQUIREMENT   0-NO,  1-YES      [     0]
0.10000E+07  8  BTRMX  - MAXIMUM BIT RATE    (BIT/SEC)          [1.024E+6]
-1000.0      9  BWIDTH(1) BANDWIDTH FOR XMTR(S)          (HZ)   [-1000.0]
-1000.0     10  BWIDTH(2) BANDWIDTH FOR XMTR(S)          (HZ)   [-1000.0]
 1000.0     11  COMRAT - RECEIVER COMMAND RATE            (BAUD) [ 1000.0]
 2250.0     12  FREQ(1)- FREQUENCY OF DOWNLINK XMTR(S)    (MHZ)  [ 2250.0]
 2250.0     13  FREQ(2)- FREQUENCY OF DOWNLINK XMTR(S)    (MHZ)  [ 2250.0]
 2250.0     14  FREQ(3)- FREQUENCY OF DOWNLINK XMTR(S)    (MHZ)  [ 2250.0]
-1000.0     15  RFREQ  - RECEIVER FREQUENCY               (MHZ)  [-1000.0]
0.00000     16  SCSFL  - SPECIAL COMMAND SYNC. FLAG    0-NO,1-YES[      0]
```

TABLE B21. ELECTRICAL POWER INPUT DATA

```
LEO LOWER ATMOSPHERIC RESEARCH SPACECRAFT MISSION 6
EP        DATA
        5  1  ISTRT5 - FIRST ALLOWABLE CONFIGURATION FOR EP    [     1]
        5  2  IEND5  - LAST ALLOWABLE CONFIGURATION FOR EP     [     6]
        0  3  ISAW   - NONZERO IMPLIES ROLL-UP SOLAR ARRAY USED[     0]
        1  4  ISBOFG - SOLAR ARRAY BOOM DRIVER REQ.  0-NO,1-YES[     0]
        2  5  NPANEL - NUMBER OF SOLAR PANELS NEEDED           [     2]
 1.1000     6  BCM    - BATTERY CAPACITY MARGIN FACTO R (AMP-HR)[  1.1]
0.13000     7  ETAI   - SOLAR CELL EFFICIENCY                  [     0]
 15.000     8  OPTEMP - BATTERY TEMPERATURE          (DEG C)   [  15.]
 24.000     9  SABOLG - SOLAR ARRAY BOOM LENGTH      (IN)      [  24.]
0.21300    10  SABWF  - SOLAR ARRAY BOOM WEIGHT FACTOR          [ .213]
 3.4000    11  SAWF   - SOLAR ARRAY WEIGHT FACTOR               [     0]
 96.000    12  SAWIDTH- SOLAR ARRAY WIDTH              (FT)    [   96]
 28.000    13  VMB    - MINIMUM BUS VOLTAGE            (VOLTS) [  28.]
 2.0000    14  XCGSA1 - LOC. OF SOLAR ARRAY PANELS 1-F ,2-C ,3-A [   1.]
 1.0000    15  XCGSA3 - LOC. OF BODY MOUNTED SA 1-F ,2-3-A      [   1.]
```

TABLE B22. SPACECRAFT SIZING, STRUCTURES AND MECHANISM INPUT DATA

```
LEO LOWER ATMOSPHERIC RESEARCH SPACECRAFT MISSION 6
VESIZE    DATA
        1  1  ISTRT6 - FIRST ALLOWABLE CONFIGURATION FOR VESIZE[     1]
        1  2  IEND6  - LAST ALLOWABLE CONFIGURATION FOR VESIZE [     3]
        1  3  MANV   - VEHICLE SKEWING FLAG                   [     1]
        0  4  MODSAT - NUMBER OF MODULES ON SATELLITE          [     0]
 8.1460     5  EOPF   - VOLUME SIZING FACTOR                   [ 4.95]
0.00000     6  RLD    - RATIO OF VEHICLE LENGTH TO DIAMETER    [    .6]
 400.00     7  WTMOD  - AVERAGE WEIGHT PER MODULES        (LBS)[ 250.]
```

APPENDIX B

The results for Conceptual Design No. 1 for a "Low Earth Orbit Lower Atmospheric Research Spacecraft" to satisfy the requirements of Mission No. 6 are given in the computer printouts for the overall spacecraft design (Table B23), the subsystem designs (Table B24 and B25) and the component and assembly descriptions (Table B26). A computer generated sketch of this spacecraft design is shown as Figure B4. The sketch illustrates that the sensor payload places some extreme demands on the host spacecraft. For example, the power required for the two LIDAR systems dictates large solar arrays for energy collection, a large equipment canister for energy storage and conditioning and a large radiator for waste energy (heat) rejection. Furthermore, packaging this spacecraft for Shuttle launch and delivery to orbit represents a challenge. In short, Mission No. 6 does require new spacecraft designs. Several spacecraft technology needs beneficial to this mission are assessed in Section 6 of the main text.

TABLE B23. SPACECRAFT SYSTEM DESIGN DESCRIPTION

STABILIZATION AND CONTROL

CONFIGURATION - - MASS EXPULSION WITH MAG. TOR. AND MOMENTUM WHEELS

POINTING ACCURACY - 0.250000(DEG.)

AUXILIARY PROPULSION

CONFIGURATION - - MONOPROPELLANT

TOTAL IMPULSE - 30237.(LB-SEC)

DATA PROCESSING AND INSTRUMENTATION

CONFIGURATION - - GENERAL PURPOSE PROCESSOR

COMPUTER OPERATIONS RATE - 12600.(IPS)

CDPI TABLE	ENGINEERING DATA	MISSION EQUIPMENT DATA
NUMBER OF COMMANDS	128.	0.
NUMBER OF MAIN FRAME WORDS	128.	0.
MAIN FRAME SAMPLE RATE	62.	0.
MAIN FRAME WORD LENGTH	16.	0.
NUMBER OF SUBFRAMES	4.	0.
SUBFRAME RATE	1.5000	0.0000
NUMBER OF WORDS PER SUBFRAME	32.	0.

COMMUNICATIONS

CONFIGURATION - - UNIFIED LINK-COMMON ANTENNAS

PRIMARY DOWNLINK DATA RATE - 128.000(KBPS)
SEPARATE DOWNLINK DATA RATE - 0.000(KBPS)

ELECTRICAL POWER

CONFIGURATION - - SERIES LOAD REGULATION - PADDLE MOUNTED SOLAR ARRAY

POWER REQUIREMENT 9616.18 WATTS
********** 2 PANEL CONFIGURATION**********
TOTAL SOLAR ARRAY AREA 1007.84 SQ FT
SOLAR ARRAY EFFICIENCY 0.13
ARRAY WEIGHT FACTOR 3.40 KG/(M**2)
INSTALLED BATTERY CAPACITY 600.00 AMP-HR

SOLAR ARRAY AND BOOM VARIABLES
NUMBER OF PANELS: 2
PADDLE WIDTH 96.000 (INS)
ARRAY BOOM LENGTH: 24.000 (INS),
BOOM MATERIAL WEIGHT FACTOR 0.213

VEHICLE SIZING

CONFIGURATION - - CYLINDER

WET SATELLITE WEIGHT - 20703.7 LBS (9391.0 KG) LAUNCH WEIGHT - 21333.0 LBS (9676.5 KG)

DIMENSIONS	LENGTH	HEIGHT	WIDTH
EQUIPMENT BAY	338.1 IN.(8.59 M)	180.0 IN.(4.57 M)	180.0 IN (4.57 M)
MISSION EQUIPMENT	98.0 IN.(2.49 M)	165.0 IN.(4.19 M)	433.0 IN.(11.00 M)
TOTAL SATELLITE	436.1 IN.(11.08 M)		

MOMENTS OF INERTIA (SLUGS*FT**2) IXX - 285245.1 IYY - 60185.5 IZZ - 331396.5

	X-CG	Y-CG	Z-CG
CENTER OF GRAVITY	270.3 IN.(6.87 M)	-0.0 IN.(-0.00 M)	0.0 IN.(0.00 M)

WEIGHT SUMMARY

COMPONENTS	3362.5
PROPELLANT	230.6
SOLAR ARRAY	1258.9
HARNESS	1009.8
STRUCTURE	6031.7
SOLAR ARRAY DRIVE	209.0
SOLAR ARRAY BOOM	15.2
THERMAL CONTROL	881.9
SATELLITE ADAPTER	629.2
MISSION EQUIPMENT	6982.0
TOTAL LAUNCH WEIGHT	21333.0

TABLE B24. DESIGN DESCRIPTIONS OF SUBSYSTEMS

```
STABILIZATION AND CONTROL

  CONFIGURATION - - MASS EXPULSION WITH MAG. TOR. AND MOMENTUM WHEELS

  EQUIPMENT CODE IDENTIFIER  203 1003 1501 2301 2401 1306  303 1706 2103  306 1001
  EQUIPMENT QUANTITIES         1    2    1    1    1    1    1    1    1    1    1
            WEIGHT   202.70 LBS       VOLUME     586.50(FT**3)      POWER REQUIREMENT     80.3 WATTS
            DES. ENG. COST     1643199.8          TEST + EVAL. COST      30058545.2
            UNIT PROD.COST     4165758.9          UNIT ENG.    COST            -0.0
            RELIABILITY           0.8568

AUXILIARY PROPULSION

  CONFIGURATION - - MONOPROPELLANT

  EQUIPMENT CODE IDENTIFIER  851  834  906 1003  499  203 1109  503 1203  603
  EQUIPMENT QUANTITIES         6    2    5    9    2    2    3    1    1    1
            WEIGHT   322.16 LBS       VOLUME       8.59(FT**3)      POWER REQUIREMENT     35.0 WATTS
            DRY WEIGHT        91.54(LBS), EXPENDABLE WEIGHT        230.62(LBS)
            DES. ENG. COST     1226537.0          TEST + EVAL. COST       1386780.5
            UNIT PROD.COST      756463.6          UNIT ENG.    COST        389832.5
            RELIABILITY           0.9437

DATA PROCESSING AND INSTRUMENTATION

  CONFIGURATION - - GENERAL PURPOSE PROCESSOR

  EQUIPMENT CODE IDENTIFIER  103  203  333  406
  EQUIPMENT QUANTITIES         2    2    2    2
            WEIGHT    71.50 LBS       VOLUME       2.10(FT**3)      POWER REQUIREMENT     75.9 WATTS
            DES. ENG. COST     3115382.8          TEST + EVAL. COST       6327611.0
            UNIT PROD.COST     2354500.8          UNIT ENG.    COST        329487.3
            RELIABILITY           0.9002

COMMUNICATIONS

  CONFIGURATION - - UNIFIED LINK-COMMON ANTENNAS

  EQUIPMENT CODE IDENTIFIER  227  101  306  401  503  601
  EQUIPMENT QUANTITIES         1    2    2    2    1    2
            WEIGHT   105.00 LBS       VOLUME       2.70(FT**3)      POWER REQUIREMENT     52.0 WATTS
            DES. ENG. COST     1072170.0          TEST + EVAL. COST        844037.8
            UNIT PROD.COST     2247278.8          UNIT ENG.    COST        176433.2
            RELIABILITY           0.6076

ELECTRICAL POWER

  CONFIGURATION - - SERIES LOAD REGULATION - PADDLE MOUNTED SOLAR ARRAY

  EQUIPMENT CODE IDENTIFIER  823  207  906 1003 1102
  EQUIPMENT QUANTITIES         2   10   10    1    1
            WEIGHT  2740.92 LBS       VOLUME      10.93(FT**3)      POWER DISSIPATION 10307.5 WATTS
            HARNESS WEIGHT     1800.8(LBS), SOLAR ARRAY WEIGHT      1258.9(LBS)
            DES. ENG. COST    17389476.3          TEST + EVAL. COST       8754805.4
            UNIT PROD.COST    11355478.9          UNIT ENG.    COST            -0.0
            RELIABILITY           0.9411
            ARRAY EFFICIENCY      0.13
MISSION EQUIPMENT

            WEIGHT  6002.00 LBS       VOLUME    4051.86(FT**3)      POWER REQUIREMENT  9200.0 WATTS
            DDT+E COST              0.0          AVERAGE UNIT COST            0.0
            RELIABILITY           0.6498
```

TABLE B25. DESIGN DESCRIPTIONS OF SUBSYSTEMS

THERMAL CONTROL

RADIATOR AREA	455.1 (FT**2),	BATTERY RADIATOR AREA	1.0 (FT**2)
		TOTAL RADIATOR AREA	456.1 (FT**2)
HEATER POWER	47811 3(BTU/HR),	BATTERY HEATER POWER	79.5(BTU/HR)
		TOTAL HEATER POWER	47890 8(BTU/HR)
HEAT PIPE	3100370.1(WATT-IN),	VARIABLE CONDUCTANCE H.P.	5150.9(WATT-IN)
HEAT PIPE LENGTH	27.3 (FT)	AVERAGE HEAT LOAD	32326.8 (BTU/HR)
STORED ENERGY	200.8 (BTU)		

THERMAL CONTROL WEIGHT

	UNIT WEIGHT (LBS)
INSULATION	175.2
HEAT PIPES	28.6
PHASE CHANGE MATERIAL	7.2
RADIATOR (ACTIVE)	670.8

TOTAL	881.9

DES. ENG. COST	2397166.3	TEST + EVAL. COST	1062498.0
UNIT PROD.COST	798431.8	UNIT ENG. COST	-0.0
IERR	1111011011		

STRUCTURES

SKIN THICKNESS	0.075 (IN)						
STRINGER NO. ,THICKNESS ,HT.	143.	,	3516.601 (IN),				1.327 (IN)
FRAME NO. ,THICKNESS ,HT.	13.	,	0.381 (IN),				1.906 (IN)
GRID BEAM THICKNESS	0.499 (IN),	SPACING	14.067 (IN),	HEIGHT	7.034 (IN)		
ENDCOVER THICKNESS- FORWARD	0.030 (IN),	CENTER	1.296 (IN),	AFT	0.030 (IN)		
EQUIPMENT BAY STRUCTURE WT.	1202.6 (LBS)						
SOLAR ARRAY BOOM AND DRIVE WT.	224.2 (LBS)						
ADAPTER WEIGHT	620.2 (LBS)						

(EQUIP. BAY STRUCT. WEIGHT INCLUDES 356.9 LBS. FOR MODULARITY)

DES. ENG. COST	15147192.8	TEST + EVAL. COST	20241988.5
UNIT PROD.COST	14377650.9	UNIT ENG. COST	-0.0

TABLE 26. SUBSYSTEM COMPONENTS AND ASSEMBLY DESCRIPTIONS.

STABILIZATION AND CONTROL

IDENT	TYPE	NO.	UNIT WEIGHT	UNIT VOLUME	UNIT POWER	D.E. COST	T.E. COST	VEHICLE PROD. COST	VEHICLE ENG. COST
203	VALVE DRIVER	1	1.6	0.1	5.9	0.0	0.0	0.0	0.0
1003	DRIVE CNTRL	2	2.4	1.0	4.0	0.0	0.0	0.0	0.0
1501	CONTROL ELEC	1	10.0	0.1	4.0	1310800.9	488069.9	610584.7	-0.0
2301	MAGNETIC TOR	1	2.9	0.0	0.6	0.0	0.0	16435.0	0.0
2401	MAGNETOMETER	1	1.0	0.0	0.3	5850.0	0.0	178128.7	-0.0
1306	CONTR MOMENT	1	206.0	583.0	40.0	0.0	20984995.3	2324139.8	0.0
303	COARSE SUN S	1	5.7	0.1	1.0	0.0	0.0	80348.8	0.0
1706	RATE INTEGR	1	3.3	0.1	0.0	0.0	0.0	0.0	0.0
2103	STAR TRACKER	1	10.0	0.5	5.5	148200.0	94770.0	321727.3	-0.0
306	FINE SUN SEN	1	3.8	0.1	1.0	172250.0	110110.0	211338.7	-0.0
1801	INERT REF	1	21.8	0.3	18.0	0.0	0.0	363063.8	0.0

AUXILIARY PROPULSION

IDENT	TYPE	NO.	UNIT WEIGHT	UNIT VOLUME	UNIT POWER	D.E. COST	T.E. COST	VEHICLE PROD. COST	VEHICLE ENG. COST
851	THRUSTER	6	2.8	0.3	0.0	275343.2	773915.9	201784.6	381221.7
834	THRUSTER	2	1.6	0.0	1.0	21549.1	0.0	32870.0	8610.7
906	LATCH VALVE	5	0.5	0.0	8.0	0.0	0.0	0.0	0.0
1003	FILTER	9	0.1	0.0	0.0	0.0	0.0	0.0	0.0
409	PRESSURE REG	2	4.8	0.4	0.0	0.0	0.0	0.0	0.0
203	ISOLATION VA	2	0.0	0.0	0.0	0.0	0.0	0.0	0.0
1109	TANK	3	12.2	1.3	0.0	0.0	0.0	0.0	0.0
503	TANK	1	12.2	1.3	0.0	0.0	0.0	0.0	0.0
1203	N2H4 FILL/DR	1	1.3	0.0	0.0	0.0	0.0	0.0	0.0
603	GN2 FILL/DRA	1	2.0	0.0	0.0	0.0	0.0	0.0	0.0

DATA PROCESSING AND INSTRUMENTATION

IDENT	TYPE	NO.	UNIT WEIGHT	UNIT VOLUME	UNIT POWER	D.E. COST	T.E. COST	VEHICLE PROD. COST	VEHICLE ENG. COST
103	COMPUTER	2	13.4	0.5	46.4	610462.0	463978.9	175705.3	243932.0
203	STACC CENTRL	2	7.8	0.2	3.0	0.0	135720.0	120986.1	0.0
333	TAPE RECORDE	2	3.5	0.2	10.5	214110.0	136800.0	113700.5	85555.3
406	COMMD DECOD+	2	11.0	0.1	5.5	0.0	305421.9	412067.3	0.0

COMMUNICATIONS

IDENT	TYPE	NO.	UNIT WEIGHT	UNIT VOLUME	UNIT POWER	D.E. COST	T.E. COST	VEHICLE PROD. COST	VEHICLE ENG. COST
227	ANTENNA	1	46.3	0.0	0.0	0.0	0.0	861591.8	0.0
101	PREMOD. PROC	2	19.0	0.3	3.1	38036.4	37128.0	183773.4	15198.8
306	TRANSMITTER	2	3.6	0.1	16.0	403503.7	393379.9	609590.0	161234.4
401	RECEIVER	2	3.6	0.1	16.0	0.0	0.0	0.0	0.0
503	COMMAND SIG	1	66.9	1.8	0.9	638629.9	413529.9	592323.6	-0.0
601	DIPLEXER	2	0.0	0.0	16.0	0.0	0.0	0.0	0.0

ELECTRICAL POWER

IDENT	TYPE	NO.	UNIT WEIGHT	UNIT VOLUME	UNIT POWER	D.E. COST	T.E. COST	VEHICLE PROD. COST	VEHICLE ENG. COST
823	SERIES LOAD	2	21.7	0.0	0.0	0.0	0.0	0.0	0.0
207	BATTERY	10	183.0	0.7	0.0	3654490.0	3018972.0	1705196.5	-0.0
906	BATTERY CHAR	10	80.0	0.4	0.0	0.0	0.0	0.0	0.0
1003	SOLAR POWER	1	1.0	0.1	0.0	0.0	0.0	0.0	0.0
1102	POWER CONTRL	1	67.0	0.0	0.0	0.0	0.0	0.0	0.0

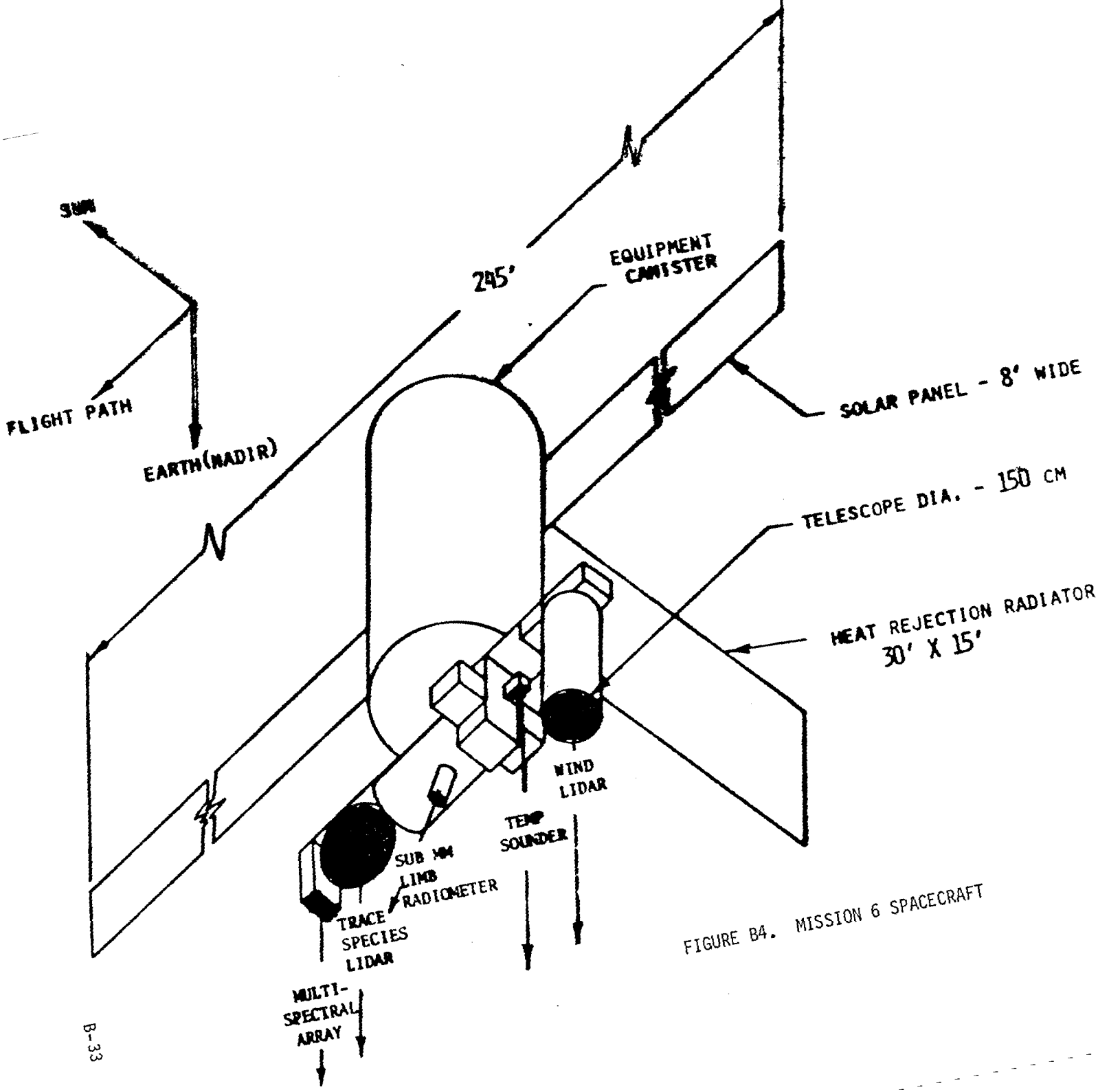

FIGURE B4. MISSION 6 SPACECRAFT

APPENDIX B

SUMMARY

The NASA-Langley IDEAS computer-aided design capability was used to generate representative spacecraft for the AOS missions for the purpose of assessing spacecraft technology needs. The assessment appears to be fairly independent of designer choices required by this design approach. Only for the large, high-power sensor package of Mission No. 6 were new spacecraft designs and advances in spacecraft subsystem technology required. From this initial usage, this design tool appears to be adequate for the initial configuration design and component sizing of advanced Earth observation spacecraft for the purpose of assessing long-term spacecraft technology needs.

1. Report No.	2. Government Accession No.	3. Recipient's Catalog No.
NASA CR-3556		

4. Title and Subtitle
TECHNOLOGY NEEDS ASSESSMENT OF AN ATMOSPHERIC OBSERVATION SYSTEM FOR TROPOSPHERIC RESEARCH MISSIONS - PART 1

5. Report Date
September 1982

6. Performing Organization Code

7. Author(s) *U. R. Alvarado, *M. H. Bortner, *R. N. Grenda, *G. G. Frippel, *H. Halsey, *S. L. Neste, **H. Kritikos +L. S. Keafer, and +L. J. DeRyder

8. Performing Organization Report No.

10. Work Unit No.

9. Performing Organization Name and Address
General Electric Company
Space Systems Division
P. O. Box 8555
Philadelphia, PA 19101

11. Contract or Grant No.
NAS1-16312

12. Sponsoring Agency Name and Address
National Aeronautics and Space Administration
Washington, DC 20546

13. Type of Report and Period Covered
Contractor Report of Part I
July 1980 - March 1981

14. Sponsoring Agency Code

15. Supplementary Notes *General Electric Company, Philadelphia, PA 19101; **University of Pennsylvania, Philadelphia, PA 19104; +NASA Langley Research Center, Hampton, VA 23665
Langley technical monitor: Lloyd S. Keafer, Jr. Final Report

16. Abstract

This report summarizes the results of a study to identify the technology advancements needed to implement the atmospheric observation satellite systems for air quality research in the 1990's. The report, covering Part I of a two-phase study sponsored by the NASA Langley Research Center, deals with tropospheric measurements. Part II (Report No. CR-3557) covers both upper and lower atmospheric measurements. The measurements and sensors are based on a model of knowledge objectives in atmospheric science. A set of potential missions and attendant spacecraft and sensors is postulated, to drive out the required technology needs. The results show that the predominant technology needs will be in passive and active sensors for accurate and frequent global measurements of trace gas concentration profiles.

17. Key Words (Suggested by Author(s))
Technology needs, atmospheric observations system, tropospheric research missions, air quality, remote sensing, trace gas measurements.

18. Distribution Statement
Unclassified - Unlimited
Subject Category 35, 45

19. Security Classif. (of this report)	20. Security Classif. (of this page)	21. No. of Pages	22. Price
Unclassified	Unclassified	244	A11

For sale by the National Technical Information Service, Springfield, Virginia 22161

NASA-Langley, 1982

End of Document