General Disclaimer

One or more of the Following Statements may affect this Document

- This document has been reproduced from the best copy furnished by the organizational source. It is being released in the interest of making available as much information as possible.

- This document may contain data, which exceeds the sheet parameters. It was furnished in this condition by the organizational source and is the best copy available.

- This document may contain tone-on-tone or color graphs, charts and/or pictures, which have been reproduced in black and white.

- This document is paginated as submitted by the original source.

- Portions of this document are not fully legible due to the historical nature of some of the material. However, it is the best reproduction available from the original submission.

NASA Technical Memorandum 83004
AIAA-82-1880

Simplification of Power Electronics for Ion Thruster Neutralizers

(NASA-TM-83004) SIMPLIFICATION OF POWER ELECTRONICS FOR ION THRUSTER NEUTRALIZERS (NASA) 18 p HC A02/MF A01 CSCL 21C
N83-12141
Unclas
G3/20 01118

Robert P. Gruber
Lewis Research Center
Cleveland, Ohio

Prepared for the
Sixteenth International Electric Propulsion Conference
cosponsored by the American Institute of Aeronautics and Astronautics,
the Japan Society for Aeronautical and Space Sciences,
and Deutsche Gesselschaft fur Luft- und Raumfahrt
New Orleans, Louisiana, November 17-19, 1982

NASA

E-1441

SIMPLIFICATION OF POWER ELECTRONICS FOR ION THRUSTER NEUTRALIZERS

Robert P. Gruber

National Aeronautics and Space Administration
Lewis Research Center
Cleveland, Ohio 44135

Abstract

A need exists for less complex and lower cost ion thruster systems. This paper discusses design approaches and the demonstration of neutralizer power electronics for relaxed neutralizer keeper, tip heater, and vaporizer requirements. The neutralizer circuitry is operated from a 200 to 400 V bus and demonstrates an order of magnitude reduction in parts count. Furthermore, a new technique is described for regulating tip heater power and automatically switching over to provide keeper power with only four additional components. A new design to control the flow rate of the neutralizer with one integrated circuit is also presented.

Nomenclature

C	output capacitance, F
f	oscillator frequency, Hz
i	small signal capacitive and resistive load current, A
I	capacitive and resistive load current, A
I_L	load current, A
I_o	load current at the lowest input voltage, A
I_{sc}	short-circuit load current, A
J_{NC}	neutralizer common current, A
J_{NK}	neutralizer keeper current, A
J_{NT}	neutralizer tip heater current, A
J_{NV}	neutralizer vaporizer rms current, A
K	open loop gain, neutralizer volts per vaporizer ampere
L	transformer secondary leakage inductance plus the reflected primary leakage inductance, H
n	transformer secondary to primary turns ratio
q	ratio of highest input voltage to lowest input voltage
R_L	load resistance, ohms
s	Laplace transform variable
v_{in}	small signal sinusoidal input voltage, V
v_L	small signal sinusoidal load voltage, V
V_{in}	input voltage, V
V_L	load voltage, V
V_{NK}	neutralizer keeper voltage, V
V_{NT}	neutralizer tip heater voltage, V
V_{NV}	neutralizer vaporizer heater voltage, V
ΔI	change in load current at constant resistive load from the lowest input voltage to the highest input voltage, A
τ	small signal transfer function time constant, sec

Introduction

Power processors for both 8- and 30-cm-diameter mercury (Hg) ion thruster systems[1,2,3] were designed to thruster requirements specified in the early 1970's.[1,3] The 30-cm Hg ion thruster requirements were specified to accommodate a broad spectrum of electric propulsion missions which had significantly different thruster operating requirements. The resultant power processor allowed great flexibility in thruster operation, but at a cost of power processor complexity. For example, 3 percent regulation specifications for the screen supply required closed-loop regulation techniques. Specified load characteristics of both the 8- and 30-cm-diameter Hg ion thrusters were based on the assumption that conventional closed-loop control techniques would be used for current and voltage regulation. The effect of other specifications on power processors has been discussed.[4]

A program addressing less complex and lower cost ion thruster systems is continuing at the NASA Lewis Research Center. The first efforts reduced the number of power supplies necessary to operate a 30-cm-diameter Hg ion thruster.[5,6] The initial demonstration of new keeper power supplies resulted in an order of magnitude reduction in parts count.[7]

The low power supplies required for thruster keepers and heaters provide the best opportunities for simplification. In the 30-cm-diameter Hg ion thruster system, the low power supplies account for approximately half of the power processor components, while handling less than 4 percent of the thruster power (run condition at full power). There are about 1750 parts for nine low power outputs. This parts count includes redundant control circuits, set point and compensation circuits, and the multiple inverter power stage and excludes telemetry and the input filter. The neutralizer power electronics, discussed in this paper, comprises 65 components for three power supplies.

Another approach to simplifying multiple ion thruster systems of the future may be to replace individual thruster neutralizers with one or two system neutralizers. Recent tests with the SERT II spacecraft showed neutralization was more easily achieved from a distance of 1 m than by the

immediate neutralizer.[9] The simplified circuits, described in this paper, show a design approach that lends itself to such a system neutralizer power circuit. Furthermore, the circuits are applicable to inert gas thrusters as well as Hg ion thrusters.

An approach was taken that exploits modified thruster neutralizer requirements, especially relaxed regulation tolerance and load profile requirements, and reduced set points to achieve an order of magnitude reduction in parts count. The basis of this approach uses a variable frequency proportional to input voltage for self regulation.[7] Additional design equations are derived and detailed designs are discussed for neutralizer supplies and controls of a 30-cm-diameter Hg ion thruster. Test results are compared to the design equations. Testing with a 30-cm-diameter Hg ion thruster neutralizer is also described.

Neutralizer Supply Requirements

Although the following requirements are for a 30-cm-diameter Hg ion thruster, similar requirements exist for inert gas thrusters.

The neutralizer requires three power supplies: the vaporizer heater supply controls propellant flow, tip heater power is required at start-up for electron emission, and the keeper supply initiates and maintains the gaseous discharge.

A summary of the relaxed requirements for the neutralizer of a 30-cm-diameter Hg ion thruster is given in Table 1. The input voltage was allowed to vary over a 2:1 range. Input power could have been supplied from the standard unregulated 28 V spacecraft bus, but it was judged desirable to power all thruster power supplies from a dedicated unregulated high voltage bus. Based on earlier work, a voltage range of 200 to 400 V was chosen to represent the higher voltage bus.[8] More recent work suggests that the high voltage bus maximum voltage be limited to 300 V due to space and thruster-induced plasma leakage currents.[10] In addition, near-Earth missions such as large space structure orbit raising or station keeping can require less than a 2:1 range in input voltage if the cold solar array voltage is limited or regulated. The basic circuits designed for the 200 to 400 V input bus requirement are applicable to a 150 to 300 V bus with little change in performance. However, if the input range is reduced, then regulation and power efficiency can be improved and mass reduced. A small amount of housekeeping power is required for the neutralizer closed-loop controller. The housekeeping power bus can vary from 8 to 20 V and only a single voltage is needed.

Neutralizer Keeper

Ion thruster keeper loads have a unique requirement for an ignition potential greater than operating potential.[11] Detailed power supply requirements for a keeper load (discussed in ref. 7) are listed in Table 1. For this demonstration, keeper current regulation tolerance with a 2:1 input voltage change was ±10 percent. Furthermore, keeper voltage was allowed to very ±1 V to simplify vaporizer controls. For a fixed power supply input voltage, keeper current varies less than ±2 percent for a ±1 V change in keeper load voltage.

Neutralizer Tip Heater

The neutralizer tip heater operates for only a short time. Once keeper discharge is established, the tip heater supply is turned off. Tip heater requirements are listed in Table 1. For this system, keeper voltage is applied simultaneously with tip heater power. When keeper current begins flowing, tip heater current is proportionaly reduced to zero at the keeper operating current. There was no requirement for a high heat command (increase heater current by 10 percent) since this precaution may be made obsolete by further thruster development. However, high heat could be provided if necessary. For example, a small high leakage inductance transformer-rectifier could be switched in parallel with the tip heater supply with a logic command.

Neutralizer Vaporizer Heater

The neutralizer vaporizer controls Hg flow by control of the temperature of the vaporizer. For this system, vaporizer heater power is supplied as a train of 20 Hz pulse width modulated dc pulses. The vaporizer thermal mass averages the power to provide the desired temperature and Hg flow. The many thruster operating conditions and possible keeper discharge modes makes open-loop vaporizer control, or even vaporizer temperature control a difficult way to insure adequate thruster system performance. Therefore, the conventional closed loop method of sensing and controlling keeper voltage by changing Hg flow, using variable vaporizer power, was adopted as a requirement. In addition, the vaporizer platinum resistance thermometer (PRT) was used to limit maximum vaporizer temperature as well as to prevent operation in undesirable modes. Control characteristics representative of the neutralizer used for this demonstration are given in reference 12. Neutralizer vaporizer heater requirements are summarized in Table 1. A control logic port is required to shut down the vaporizer during pre-heat of the thruster.

Approach

An approach was taken that demonstrates how modified thruster requirements, especially relaxed regulation tolerances, can achieve low parts count. The basic avenues toward achieving low parts count are the elimination of active voltage limiting and closed-loop current control, as well as simplification of certain sense, control, and logic functions used in conventional thruster neutralizer systems.

The circuit concept for the neutralizer keeper, tip heater, and vaporizer supplies is a new self-regulating technique.[7] The technique uses a modified full bridge Jensen[13] power oscillator. A new start circuit as well as on-off control were designed into the oscillator. One oscillator with three separate power output transformers was used to power each of the neutralizer loads. The oscillator frequency is directly proportional to the input voltage. The power transformers are designed with pre-determined leakage inductances. Since leakage inductance current is reduced as frequency increases, output current going through the leakage inductance is automatically reduced as the oscillator frequency is in-

creased. This interaction results in a first-order correction of the increase in output current due to increased input voltage. Short circuit current is virtually constant over the 2:1 input voltage range.

The expression for load voltage versus load current for each power supply is:

$$V_L = nV_{in}\left(1 - \frac{I_L}{I_{sc}}\right)^{1/2} \tag{1}$$

where

$$I_{sc} = \frac{nV_{in}}{8fL} \tag{2}$$

and the ratio of V_{in} to f is a constant.

Using equation (1), design equations were developed for the tip heater and vaporizer resistive loads. The following equations provide expressions for short circuit current and open circuit voltage as a function of resistive load current regulation tolerance for any input voltage range:

$$I_{sc} \simeq I_o\left[\frac{q^2 - 1 + 2\left(\frac{\Delta I}{I_o}\right)}{q^2 - 1 - 2\left(\frac{\Delta I}{I_o}\right)}\right] \tag{3}$$

$$nV_{in} \simeq \frac{I_o R_L}{2}\left[\frac{q^2 - 1 + 2\left(\frac{\Delta I}{I_o}\right)}{\left(\frac{\Delta I}{I_o}\right)}\right]^{1/2} \tag{4}$$

Equations (3) and (4) were used to determine the requirements for the vaporizer, tip heaters, and keeper power transformers that were designed as described in reference 7.

Vaporizer Heater Power and Control

Power is supplied to the 3-ohm vaporizer heater using a transformer-rectifier scheme similar to the keeper supply. The load characteristic is given by equation (1), so there is some automatic correction for input voltage changes. For control, power to the transformer is pulse width modulated at 20 Hz, using a power transistor as a switch. The vaporizer heater receives pulsating direct current and the vaporizer thermal mass averages the power for constant temperature operation.

The transfer function for the 30-cm Hg ion thruster neutralizer given in reference 12 is

$$\frac{V_{NK}}{J_{NV}} = \frac{K}{\left(\frac{s}{0.02} + 1\right)\left(\frac{s}{2} + 1\right)} \tag{5}$$

Gain (K) varies widely with thruster operating conditions, but the break frequencies stay constant. The maximum gain measured in reference 12 was 50 or 34db which was measured for the specified neutralizer keeper current of 2.1 A.

Within limits, the keeper voltage being regulated is not critical to thruster performance or life and can vary ± 1 V.[14] This allows the use of a lower gain-control loop and elimination of compensation amplifiers, resistors, and capacitors necessary when 1 percent regulation is required. By reducing the phase margin to 50° from 60°, the worst case gain can be increased from 34 to 42 dB. The power electronics gain can then be as high as 2.5 For this demonstration, the keeper was intended to run at higher current than that used in reference 12. Furthermore, the thruster neutralizer used here was a later model than the neutralizer used in reference 12. Therefore, for this initial design and demonstration, the power supply gain near the nominal operating point of 3 W neutralizer-vaporizer power was conservatively chosen to be 0.7 at 200 V input and 1.2 at 400 V input.

Neutralizer Tip Heater

The tip heater power is supplied from a transformer-rectifier filter similar to the keeper supply. Power to the transformer primary is supplied from the full bridge power oscillator. The tip heater is turned off once the keeper discharge is established. Heater turn-off has previously been accomplished by sensing keeper current and shutting off the heater power supply when logic circuits determine that the keeper current is above a certain level. Another method uses only one power supply for both tip heater and neutralizer keeper.[5] A relay is used to transfer power from the tip heater to the neutralizer keeper. The relay cycles the power supply output between the neutralizer tip heater and neutralizer keeper until a high enough discharge current is sensed, then, only the keeper discharge is powered. The discharge ion bombardment then provides enough power to heat the electron-emitting tip.

Two separate approaches were considered for tip heater control and power. The first, a straight-forward method, turns off the tip heater power when the keeper voltage drops below a preset value at keeper ignition. A signal proportional to keeper voltage, as well as a reference voltage, is already available from the vaporizer control circuit. A comparator with hysteresis turns off a power transistor in the primary of the tip heater power transformer (the same way the vaporizer is pulsed on and off) when the keeper voltage signal falls below the reference level. Comparator hysteresis prevents the power transistor from spending too much time in the active region where its power dissipation can be excessive. This approach requires 14 additional parts, but has the advantage of not consuming power once the keeper is ignited.

The second approach is shown in Figure 1. Three versions of the technique provide regulated tip heater power as well as perform the current sensing, logic, and heater supply turn-off functions with as few as four parts. The circuit in Figure 1(a) adds four parts to the keeper supply and requires heater current to be less than keeper current. The tip heat supply is current limited and has the load characteristic given by equation

(1). The tip heater and keeper supplies are connected so that any keeper current must also be supplied by the tip heater supply. Once the keeper discharge is established, tip heater power is virtually zero since the tip heater supply short circuit current is exceeded. The tip heater voltage is clamped to about -0.7 V (one diode drop).

The circuit shown in Figure 1(b) uses three more parts than the circuit of 1(a). The extra winding on the heater supply adds enough ampere-turns to the secondary leg of the tip heater transformer so that the tip heater is cut off, even when the keeper current is less than the tip heater current.

The circuit of Figure 1(c) allows complete cut off of the tip heater, but requires more turns on the transformer secondary leg than the other two circuits.

The three circuits in Figure 1 shut off the tip heater, but the heater supply is essentially operating into a short circuit and extra power is being dissipated after keeper ignition. These circuits require slightly more power, but this is partially offset because the tip heater supply also provides a large part of the open circuit keeper ignition potential. Keeper supply open circuit voltage then depends only upon the regulation requirements and the keeper supply can be designed for a lower open circuit voltage which increases its efficiency. The circuit in Figure 1(b) was chosen to demonstrate this technique.

Tip heater power, regulation, current sense and turn-off can be accomplished with the addition of seven or four components, but slightly more power is consumed. Compared with the neutralizer keeper supply, discussed in reference 7, it was found that circuit 1(b) uses 6.5 more watts or decreases power efficiency of the baseline J-series 30-cm Hg[15] ion thruster system by 0.2 percent. The alternative straight-forward approach discussed earlier does not increase power consumption, but requires more parts (14 total).

Neutralizer Keeper Supply

The neutralizer keeper supply is the same basic circuit described in reference 7, except that two voltages from the tip heater supply are added to make up the total keeper voltage. This changes the load profile at low keeper currents. However, after keeper ignition, the tip heater voltages go to nearly zero and the keeper supply operates as described in reference 7.

In addition, an on-off control logic port and a new start circuit has been designed into the keeper supply.

Audio Susceptibility Considerations

Spacecraft dc power system buses carry low level noise as well as dc power. Most of the noise power spectrum is in the audiofrequency range (20 to 20 000 Hz); therefore, power-circuit behavior with audiofrequency noise added to the dc input is important. The small signal (about 1 V peak-to-peak) transfer function of the basic self-regulating power circuit (ref. 7) used for all the neutralizer power supplies derived in the appendix is:

$$\frac{v_L}{v_{in}} = \frac{2n}{I_{sc}^{1/2}} \frac{(I_{sc} - I_L)^{3/2}}{(2I_{sc} - I_L)} \frac{1}{(\tau s + 1)} \qquad (6)$$

ORIGINAL PAGE IS
OF POOR QUALITY

where

$$\tau = \left(\frac{I_L}{2I_{sc} - I_L}\right) R_L C \qquad (7)$$

From equations (6) and (7), the maximum signal transfer occurs at dc (or very low frequency) where the natural regulation property of the circuit provides attenuation as load current is increased. As small signal frequency is increased, the circuit behaves like a simple lag network, increasing attenuation 20 db per decade after the corner frequency is reached.

Neutralizer Supply Circuit Design

The power circuit design shown in Figure 2 is based on the full-bridge neutralizer keeper power supply design detailed in reference 7. Power transformers for the neutralizer loads used ferrite cores for convenience and data are given in Table 2. One oscillator (Q_1 to Q_4) is used to power all three neutralizer loads. A new start circuit and an isolated on-off control logic port were designed and added to the original circuit.

The new start circuit comprises R_6 and R_7, CR_2, CR_5, and C_2. Capacitor C_2 charges through R_7 until the firing voltage of CR_5 is reached (typically 32 V). The pulse from C_2 into T_1 starts the converter by momentarily turning Q_2 and Q_3 on, while holding Q_1 and Q_4 off. Resistor R_6 and CR_2 limit the voltage on C_2 to prevent pulsing during normal operation. Turn-off is achieved by clamping the gate to source voltage of Q_3 and Q_4, below the threshold voltage using U_2, an opto-coupler, together with CR_1 and CR_4. Diode CR_3 prevents C_2 from charging.

The tip heater is powered from T_3 and operates as previously described. Vaporizer power is supplied through T_4 and is pulse-width modulated at a 20 Hz rate by Q_5 and the regulating pulse width modulator, U_1. The regulating pulse-width modulator integrated circuit contains the voltage reference (5.0 V), oscillator, error amplifier, pulse-width modulator, drivers, a shutdown comparator, and vaporizer shutdown logic port. A signal proportional to keeper voltage is taken from T_1. For convenience during testing, potentiometer R_8 was used as a voltage divider to set the ratio of feedback signal to keeper voltage. The feedback signal is compared to the reference in the low gain error amplifier. Integrated circuit U_1 generates the pulse width modulated 20 Hz Q_5 gate signal width proportional to the error signal. The resultant average current to the neutralizer is linearly proportional to the error signal. However, the rms current to the neutralizer is non-linear, so the circuit gain increases at low current and changes with input voltage, but not enough to be of any consequence. The change in rms vaporizer current per volt change in keeper voltage for the entire circuit at 1 A rms vaporizer current was 0.7 at 200 V input and 1.2 at 400 V input. A vaporizer overtemperature limit was implemented using the vaporizer platinum resistance thermometer (PRT). To save using an extra amplifier, the PRT signal was increased by using a higher PRT current. The higher current caused a neglible amount of self-heating. Room temperature

tests of the PRT in a J-series 30-cm-diameter Hg ion thruster in vacuum were run using a precision current source. Temperature rises measured were 0° C for 0.22 mW, 0.7° C for 2.0 mW, and 2.7° C for 5.5 mW. As a compromise between self-heating and signal level, worst case power dissapation was chosen to be 2 mW since an error as high as 2° C is not significant. The PRT was used in one leg of a bridge powered by the 5.0 V reference. The U_1 shutdown comparator was used as a detector and turns off all vaporizer power when the bridge signal exceeds about 100 mV. The comparator trip-level threshold change with U_1 temperature is about +0.2 mV/°C. A small positive temperature coefficient resistor, R_{18}, was used to compensate for most of this variation. Since the comparator signal is low level, noise filters comprised of C_{11}, R_{12}, and C_8 were used.

Another vaporizer control circuit configuration using fewer parts, where CR_{18} and CR_{19} are eliminated, was examined but had the disadvantage that the vaporizer could not be completely turned off. Some newer integrated circuits being designed especially for single-ended outputs may further reduce the parts count.[16]

Neutralizer Supply Circuit Performance

The neutralizer power supply regulation, power efficiency, and other circuit functions were tested at room temperature using resistive loads. For convenience, audio susceptibility tests were run on the keeper supplies described in reference 7. These supplies exhibit the same general behavior as all the neutralizer circuits used for this demonstration. Tests with the J-series 30-cm Hg ion thruster neutralizer were run using only the neutralizer assembly with a collector plate to simulate operation of a neutralizer.

Resistive Load Tests

The neutralizer circuits shown in Figure 2 were tested over the input voltage range with resistive loads. The circuit was turned on and off into a short circuit and various resistive loads at 400 to 200 V input using the isolated on-off control logic port, provided by the opto-coupler, U_2. In addition, the circuit was also turned on and off into a short circuit and various loads at input voltages from 200 to 400 V by turning the input power on and off. Load transients, including short circuits, were also induced at 200 and 400 V input. No failures or degradation occured throughout all the tests which accumulated about 80 hr.

The neutralizer keeper load profile is shown in Figure 3. The short circuit current is 0.15 A higher at 400 V input than at 200 V input and results in wider regulation limits than given by equation (3) which assumes constant short circuit current. The keeper load profile represents adding the two tip heater rectified transformer secondary voltages to the keeper supply voltages until about 2.2 A is reached; then from 2.2 A to short circuit, the neutralizer keeper load profile is represented by equation (1).

Keeper supply ripple was 0.8 V peak-to-peak at nominal loading.

Neutralizer tip heater current versus neutralizer keeper current is shown in Figure 4 for a tip heater load of 3.25 ohms. At zero keeper current, tip heater current line regulation boundaries are slightly more than given by equation (3). Tip heater current is slightly negative at 2.1 A keeper current for 200 V in, and 2.2 A keeper current for 400 V in. About 0.2 A of keeper current flows through the 3.25-ohm simulated heater. This increases to about 0.6 A for a 1-ohm heater and represents 0.3 W heater power when the heater is off. This is not significant and, therefore, the circuit was not changed to the more efficient circuit shown in Figure 1(c). Power efficiency measured with a 3.25-ohm heater load was 52.3 percent at 400 V input with a keeper voltage of 14.51 V, and 64.1 percent at 200 V input and keeper voltage at 15.30 V. This compares with the neutralizer-keeper supply, detailed in reference 7, which exhibited a power efficiency of 60 percent for a keeper voltage of 15 V at 400 V input and 76 percent at 200 V input. Another indirect comparison is the 30-cm-diameter Hg Ion Thruster Engineering Model power supply. The low power supply efficiency was about 50 percent at the full beam run condition.[17]

The neutralizer vaporizer supply was tested with a 3-ohm load and met the requirements listed in Table 1.

The main purpose of this effort was to demonstrate circuit concepts and to obtain benchmark data. No effort was made to raise efficiency or reduce weight. As a start, lighter weight and higher efficiency could be achieved by using higher flux density transformer core material, core configurations that minimize copper weight, and more efficient power MOSFETS.

Audio Susceptibility

The two keeper circuits detailed in reference 7 are representative of the power circuits used for the neutralizer system. For convenience, tests and analyses were run on these two supplies instead of the neutralizer supplies described in this report. Only the neutralizer vaporizer supply with its controller is significantly different, but only because of the control circuit. It was judged that this difference would not present serious difficulties because the vaporizer time response is very long compared to the periods of audio frequencies.

The test set-up used for audio susceptibility is shown in Figure 5, since an oscilloscope was used to measure peak-to-peak voltages accuracy was limited. Equations (6) and (7) derived in the Appendix were used to calculate gain versus frequency for various load resistances. Figure 6 shows test data and calculated values of gain versus frequency for the 18- to 36-V input parallel converter detailed in reference 7. Data for line voltages of 18 and 36 V show the same general trend. Attenuation is greatest at the lowest resistance loads and falls with frequency at about 20 db per decade. For heavy loads, where attenuation is greatest, the equations predict more attenuation. However under heavy loads, very accurate measurements of I_{SC} and I_L are needed because the small signal transfer function depends upon the difference between the two currents, which are almost equal and are measured in the presence of some ripple current. In addition, short circuit current for this converter depends slightly on input voltage and this is not accounted for in the model. Figure 7 shows calculated and measured values of the small signal

transfer function for the 200- to 400-V converter detailed in reference 7. For this converter, there is a much greater shift in short circuit current with input voltage, so the measured values for gain at heavy loads are greater than predicted by the model. However, attenuation is always greater than or equal to dc line regulation. In addition, the corner frequencies at light loads are higher than those predicted by the model. The corner frequencies for the full bridge converter are an order of magnitude higher than the corner frequencies for the parallel converter. This difference is due mainly to the output capacitors used in each supply.

The test results and transfer function show that the self-regulating power circuit concept has desirable properties that should ease dc bus filter requirements.

Neutralizer Tests

The J-series 30-cm Hg ion thruster neutralizer, shown in Figure 8, was tested in a port in the facility described in reference 18. A perforated collector plate (not shown in Figure 8), connected to a current regulated power supply and mounted about 6.5 cm in front of the neutralizer orifice, was used to simulate beam extraction. The test electrical diagram is shown in Figure 9.

For convenience, some of the current measurements recorded with the strip-chart recorder were made with dc clip on current probes. Neutralizer common current was measured using a 0.01 ohm shunt, but this measurement did not include collector (simulated beam) current. A 100 000 ohm bleeder resistor was connected across the keeper supply to ensure that the keeper supply capacitor voltage rating (125 V used for convenience) would not be exceeded by peak-charging when the keeper was at open circuit.

Several tests were run with the neutralizer. The preheat phase was demonstrated by turning on the tip heater and keeper while the vaporizer was shutdown by closing S_1. The system was run closed-loop with the collector off for two periods of approximately 15 hr each with no instabilities or anomolies. The neutralizer data in Figure 10 demonstrate a neutralizer operating sequence. Initial input voltage was set at 300 V. About 200 sec later, the logic on command was given and tip heater power keeper ignition voltage and vaporizer power were applied simultaneously. Tip heater voltage increased as the tip heater resistance increased. Tip heater resistance of this particular neutralizer overshoots, then stabilizes. The keeper ignited about 400 sec after power was applied. At ignition, tip-heater voltage changed from +9.5 to -0.7 V. Keeper current was about 2.75 A and neutralizer common current was 2.35 A. About 0.4 A was flowing through the tip heater. Tip heater power after ignition was about 0.3 watts.

Vaporizer control loop response after the step change, caused by ignition, appeared stable and overdamped. Next, the collector simulating beam extraction was turned on. Vaporizer current settled to a lower level after the collector step change. Keeper voltage stabilized about 0.3 V lower since the control-loop gain was low. When the collector was turned off, neutralizer voltages and currents approached the previous levels in a stable manner. With the collector off, step changes were introduced into the input from 300 to 200 V, 200 to 400 V, and 400 to 200 V. Step input voltage changes were repeated with the collector on. System responses to these step changes were stable. The range of keeper voltage recorded during these tests was from 13.9 to 15.4 V. Keeper current varied from about 2.2 to 3.0 A.

The vaporizer overtemperature limit was demonstrated by changing R_8 (fig. 2) to force the neutralizer vaporizer temperature to reach the upper limit of 357° C. Limit cycles are recorded for 300 and 400 V inputs with the collector off. Sustained limit cycles at 200 V were not possible because R_8 was already set at a maximum value. To achieve limit cycle operation at 200 V input, the feedback ratio would need to be decreased further by adding turns to the feedback winding on T_1.

Approximate Hg flow measurements were made at 300 V input. The equivalent Hg flow was about 44 mA at zero A collector, 29 mA at 2 A collector, and 58 mA average during high temperature limit cycling with the collector off. Flow measurements taken during limit cycling were complicated by Hg expansion and contraction during temperature cycling.

For this neutralizer under conditions of the previous tests, the neutralizer keeper extinguishes when the collector current changes from 2 A to zero A (representing beam recycle), but automatically restarts once the tip heater is re-heated. This did not occur at 300 V in. One possible explanation is that the vaporizer temperature was 307° C at 200 V in, and flow may not be adequate to sustain keeper discharge when the collector beam is off for this particular neutralizer, under the operating parameters chosen for the test. If this neutralizer characteristic is undesirable and the neutralizer cannot be modified, then a lower temperature limit function may be considered as one possible way to prevent the neutralizer from extinguishing.

Conclusions

Simplification of power electronics for ion thruster systems can be achieved by reducing parts count; leading to less complexity and lower cost. New concepts and approaches for simplification were demonstrated with the neutralizer power electronics which comprises the keeper, tip heater, and vaporizer power supplies and controls. The neutralizer-power electronics simplification results from relaxing ion thruster neutralizer-power supply regulation tolerances, redefining load profile requirements, and reducing set points. A key to achieving low parts count is the elimination of active voltage limiting, as well as closed-loop current control used in conventional ion thruster power supplies.

A new neutralizer power and control system was demonstrated for a 30-cm Hg ion thruster. The system has an order of magnitude fewer components than contemporary neutralizer systems. In addition, power efficiency and thruster propellant utilization are virtually unchanged.

The self-regulating power circuit concept small-signal transfer function, as well as test data, show that the desirable attenuation properties of the circuit can simplify power source filtering. The neutralizer power electronics, operating from an unregulated high voltage bus (200 to 400 V), demonstrated compatible operation with an ion thruster neutralizer.

Appendix

Derivation of Small Signal Transfer Function

The purpose of this appendix is to develop an expression for the small-signal transfer function of the self-regulating dc-to-dc converter from fundamental circuit properties.

For this derivation the converter output filter capacitor is considered to be part of the load. Therefore the converter capacitive plus resistive load current is now represented by I instead of I_L. From equation (1):

$$I = I_{sc}\left(1 - \frac{V_L^2}{n^2 V_{in}^2}\right) \tag{A1}$$

The differentials of V_L and V_{in} are used to approximate the converter small signal input and output voltages. Small signal capacitive and resistive load current is approximated by the total differential of I:

$$i \simeq \left(\frac{\partial I}{\partial V_L}\right) v_L + \left(\frac{\partial I}{\partial V_{in}}\right) v_{in} \tag{A2}$$

Therefore

$$i \simeq \frac{-2I_{sc}}{V_L}\left(1 - \frac{I}{I_{sc}}\right) v_L + \frac{2I_{sc}n}{V_L}\left(1 - \frac{I}{I_{sc}}\right)^{3/2} v_{in} \tag{A3}$$

Since I is nearly equal to I_L equation (A3) becomes

$$i \simeq \frac{-2I_{sc}}{I_L R_L}\left(1 - \frac{I_L}{I_{sc}}\right) v_L + \frac{2I_{sc}n}{I_L R_L}\left(1 - \frac{I_L}{I_{sc}}\right)^{3/2} v_{in} \tag{A4}$$

Small signal capacitive and resistive load current is also given by:

$$i = Csv_L + \frac{v_L}{R_L} \tag{A5}$$

Combining equations (A4) and (A5) results in

$$\frac{v_L}{v_{in}} \simeq \frac{2n}{I_{sc}^{1/2}} \frac{(I_{sc} - I_L)^{3/2}}{(2I_{sc} - I_L)} \frac{1}{\tau s + 1} \tag{A6}$$

where

$$\tau = \left(\frac{I_L}{2I_{sc} - I_L}\right) R_L C \tag{A7}$$

REFERENCES

1. "30-Centimeter Ion Thruster Subsystem Design Manual," NASA TM-79191, 1979.
2. Sharp, G.R., Gedeon, L., Oglebay, J.C., Shaker, F.S. and Siegert, C.E., "A Mechanical, Thermal and Electrical Packaging Design for a Prototype Power Management and Control System for the 30-cm Mercury Ion Thruster," AIAA Paper 78-685, Apr. 1978.
3. Herron, B.G., Hyman, J., Jr., and Hopper, D.J., "Development of an 8-cm Engineering Model Thruster System," AIAA Paper 76-1058, Nov. 1976.
4. Biess, J.J. and Schoenfeld, A.D., "Effect of Requirement Specification on Implementation of a Power Processor," 24th Power Sources Symposium, PSC Publications Committee, 1970, pp. 123-128.
5. Rawlin, V.K., "Reduced Power Processor Requirements for the 30-cm Diameter Hg Ion Thruster," AIAA paper 79-2081, Oct. 1979.
6. Rawlin, V.K., "Extended Operating Range of the 30-cm Ion Thruster with Simplified Power Processor Requirements," AIAA Paper 81-0692, Apr. 1981.
7. Gruber, R.P., "Simplified Power Supplies for Ion Thrusters," AIAA Journal of Spacecraft and Rockets, Vol. 19, No. 5, Sept.-Oct. 1982, pp. 451-458.
8. Biess, J.J. and Inouye, L.Y., "Design Study for Improved Ion Thruster Power Processor," TRW Defense and Space Systems Group, Redondo Beach, CA, TRW 34309-6001-RU-01, Dec. 1980. (NASA CR-165288.)
9. Kerslake, W.R. and Domitz, S., "Neutralization Tests on the SERT II Spacecraft," Electric Propulsion and its Applications to Space Missions, AIAA Progress in Astronautics, AIAA, Vol. 79, 1981, pp. 450-468.
10. Stevens, N.J., private communication, NASA Lewis Research Center, Aug. 1982.
11. Sheheen, T.W. and Finke, R.C., "Parametric Investigation of Enclosed Keeper Discharge Characteristics," NASA TM X-2799, 1973.
12. Robson, R.R., "Compensated Control Loops for a 30-cm Ion Engine," AIAA Paper 76-994, Nov. 1976.
13. Jensen, J.L., "An Improved Square Wave Oscillator Circuit," IRE Transactions on Circuit Theory, Vol. CT-4, No. 3, Sept. 1957, pp. 276-279.
14. Rawlin, V.K., private communication, NASA Lewis Research Center, July, 1982.
15. Schnelker, D.E., Collett, C.R., Kami, S., and Poeschel, R.L., "Characteristics of the NASA/Hughes J-Series 30-cm Engineering Model Thruster," AIAA paper No. 79-2077, Oct. 1979.

16. Alberkrack, J. and Scott, B. "Scaling Down PWM Chip Suits Low-Power Switchers," Electronic Design, Vol. 30, No. 14, July 8, 1982, pp. 175-179.

17. Frye, R.J., private communication, NASA Lewis Research Center, March 1980.

18. Finke, R.C., Holmes, A.D. and Keller, T.A., "Space Environment Facility for Electric Propulsion Systems Research," NASA TND-2774, 1965.

Table 1 – 30-cm diameter Hg ion thruster neutralizer power electronics demonstration requirements

Item	Neutralizer-keeper Requirement	Neutralizer tip heater Requirement	Neutralizer-vaporizer heater requirement
Nominal operating point	15 V at 2.5 A	12 V at 4 A	3 V at 1 A rms with capability of 5.2 V at 1.7A rms
Regulation	±10 percent current	±10 percent current	Control loop regulates keeper voltage ±1 V nominal
Input voltage	2:1 Range, 200 to 400 V	2:1 Range, 200 to 400 V	2:1 Range, 200 to 400 V
Housekeeping power	Not needed	Not needed	Nominally 15 V at 0.05 A
Ignition	>50 V at low source impedance	Not applicable	Not applicable
Input-output-control isolation	>10 MΩ dc resistance	>10 MΩ dc resistance	>10 MΩ dc resistance
Load resistance	Not applicable	1 Ω cold, 3 Ω hot	3 Ω hot or cold
Operation into open circuit	Required	Required	Required
Operation into short circuit or overload	Required	Required	Required
On-off controls	Control logic port required	On with keeper, off is automatic with keeper ignition or with keeper off	On and off with keeper and separate control logic port for shutdown
Output ripple	Nominally 0.5 V peak-to-peak maximum	Nominally 1 V peak-to-peak maximum for $f < 50$ kHz	Not applicable

Table 2 - Transformer data

Transformer	Core	Windings
T_1	EC70-EC70G 3C8 material	Primary leg Primary: 130 turns no. 20 AWG Vaporizer power: 25 turns no. 22 AWG bifilar Feedback for Q_1 gate drive: 6 turns no. 26 AWG Feedback for Q_2 gate drive: 6 turns no. 26 AWG Feedback for Q_3 and Q_4 gate drive: 5 turns no. 26 AWG Pulse start: 2 turns no. 20 AWG Secondary leg Secondary: 22 turns no. 16 AWG bifilar Feedback for vaporizer control: 8 turns no. 26 AWG bifilar
T_2	80516-1/2D	95 turns no. 36 AWG trifilar
T_3	EC70-EC70 with center gap increased to 4 cm 3C8 material	Primary leg Primary: 130 turns no. 20 AWG Secondary leg Secondary 1: 27 turns no. 16 AWG bifilar Secondary 2 tip heater: 22 turns no. 16 AWG bifilar
T_4	EC52G-EC52G 3C8 material	Primary leg Primary: 54 turns no. 22 AWG bifilar Secondary leg Seconday: 18 turns no. 18 AWG bifilar

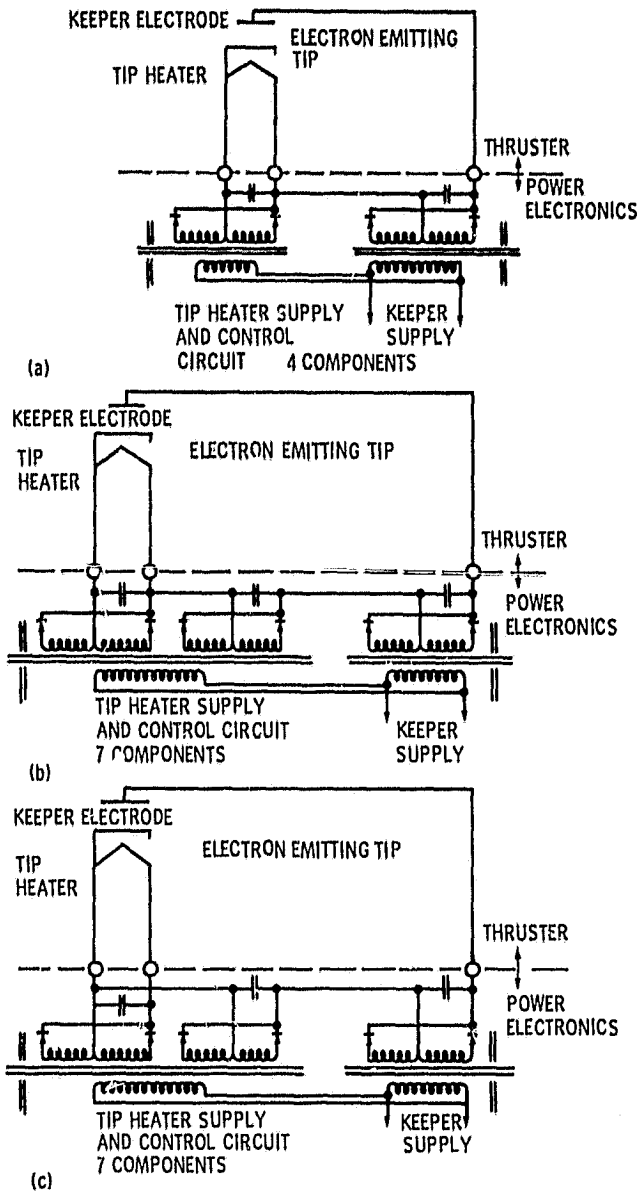

(a) Tip heater power and control circuit for heater I < keeper I.
(b) Tip heater power and control circuit for heater I > keeper I.
(c) Tip heater power and control circuit for any heater current.

Figure 1. - Tip heater power, control and sense circuits.

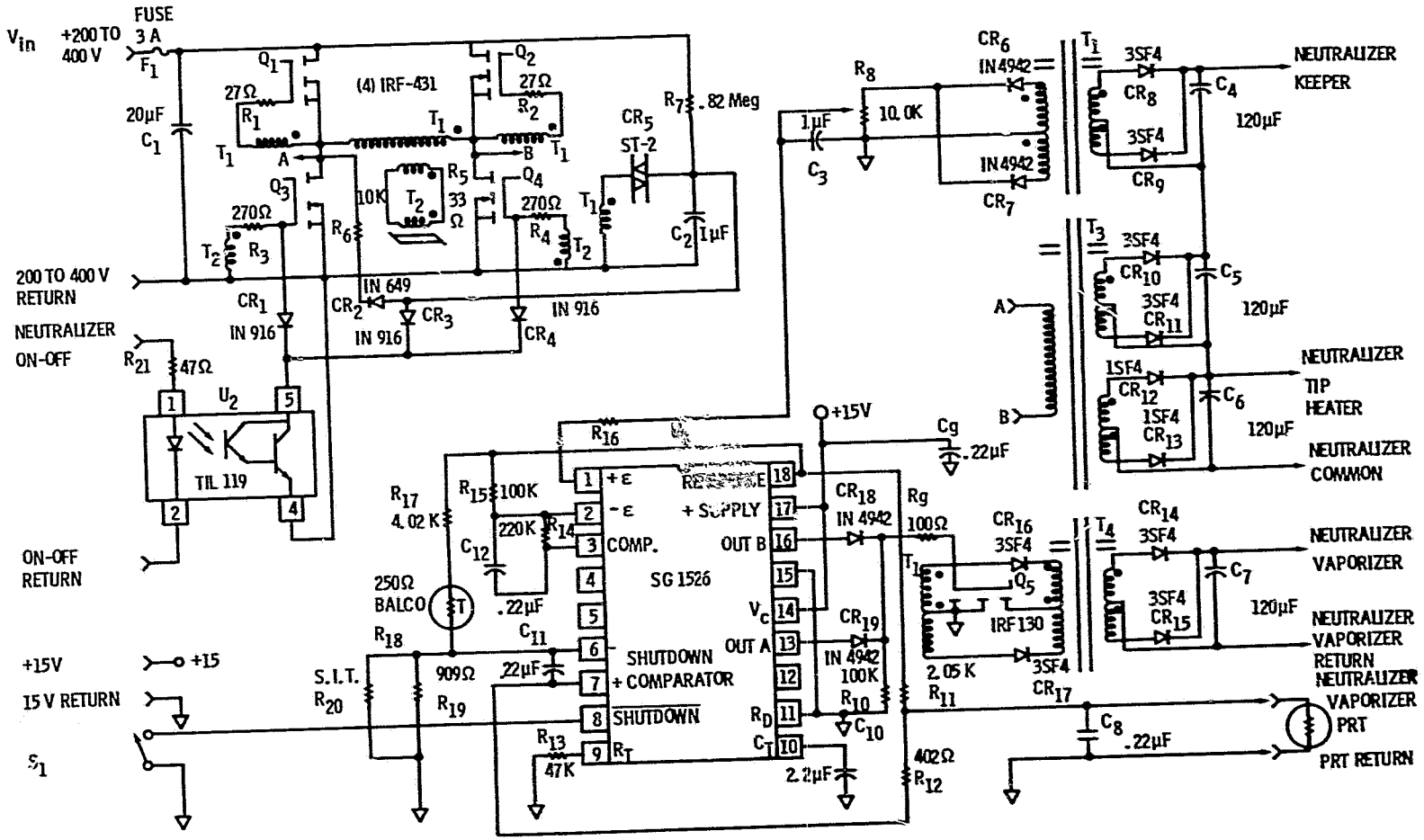

Figure 2. - Schematic diagram 30cm Hg ion thruster neutralizer power and control circuits.

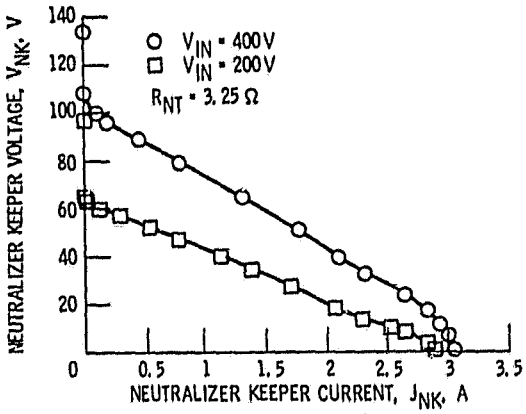

Figure 3. - Neutralizer keeper voltage as a function of neutralizer keeper current.

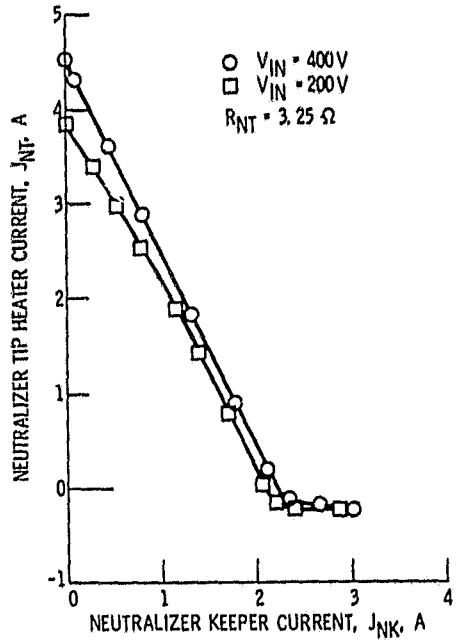

Figure 4. - Neutralizer tip heater current as a function of neutralizer keeper current.

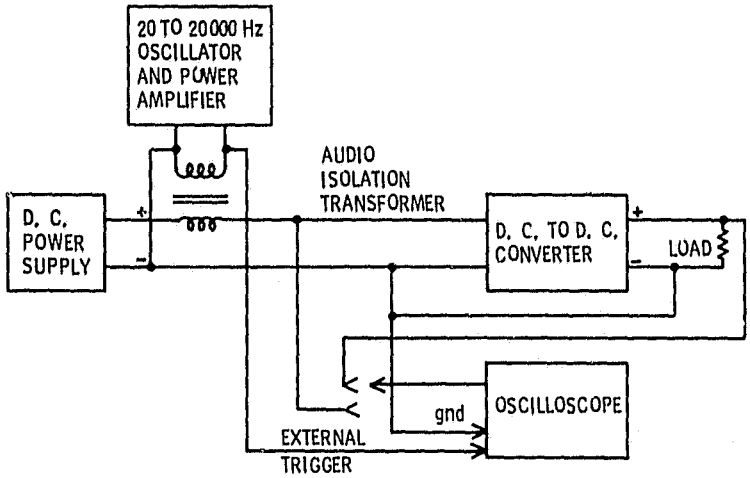

Figure 5. - Schematic diagram, audio susceptibility tests.

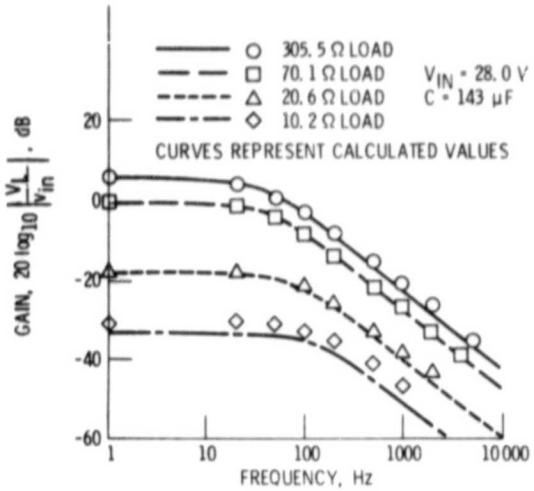

Figure 6. - Parallel converter (V_{IN} = 18 to 36 V) small signal gain versus frequency.

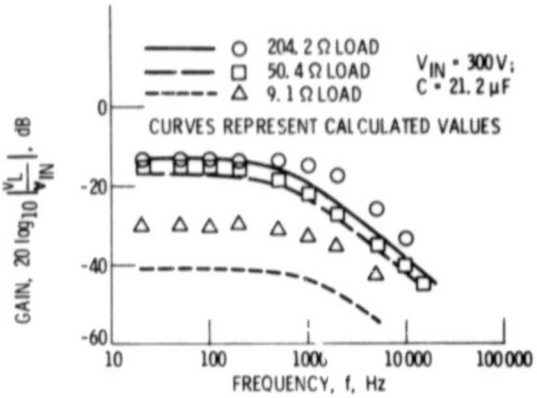

Figure 7. - Full bridge converter (V_{IN} = 200 to 400 V) small signal gain versus frequency.

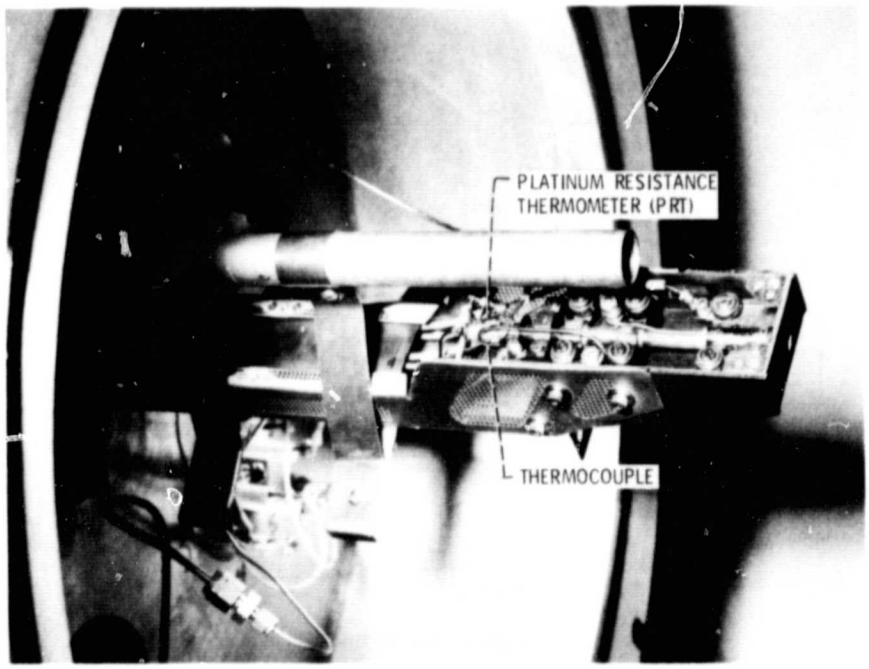

Figure 8. - J-Series 30 cm. Hg ion thruster neutralizer test configuration.

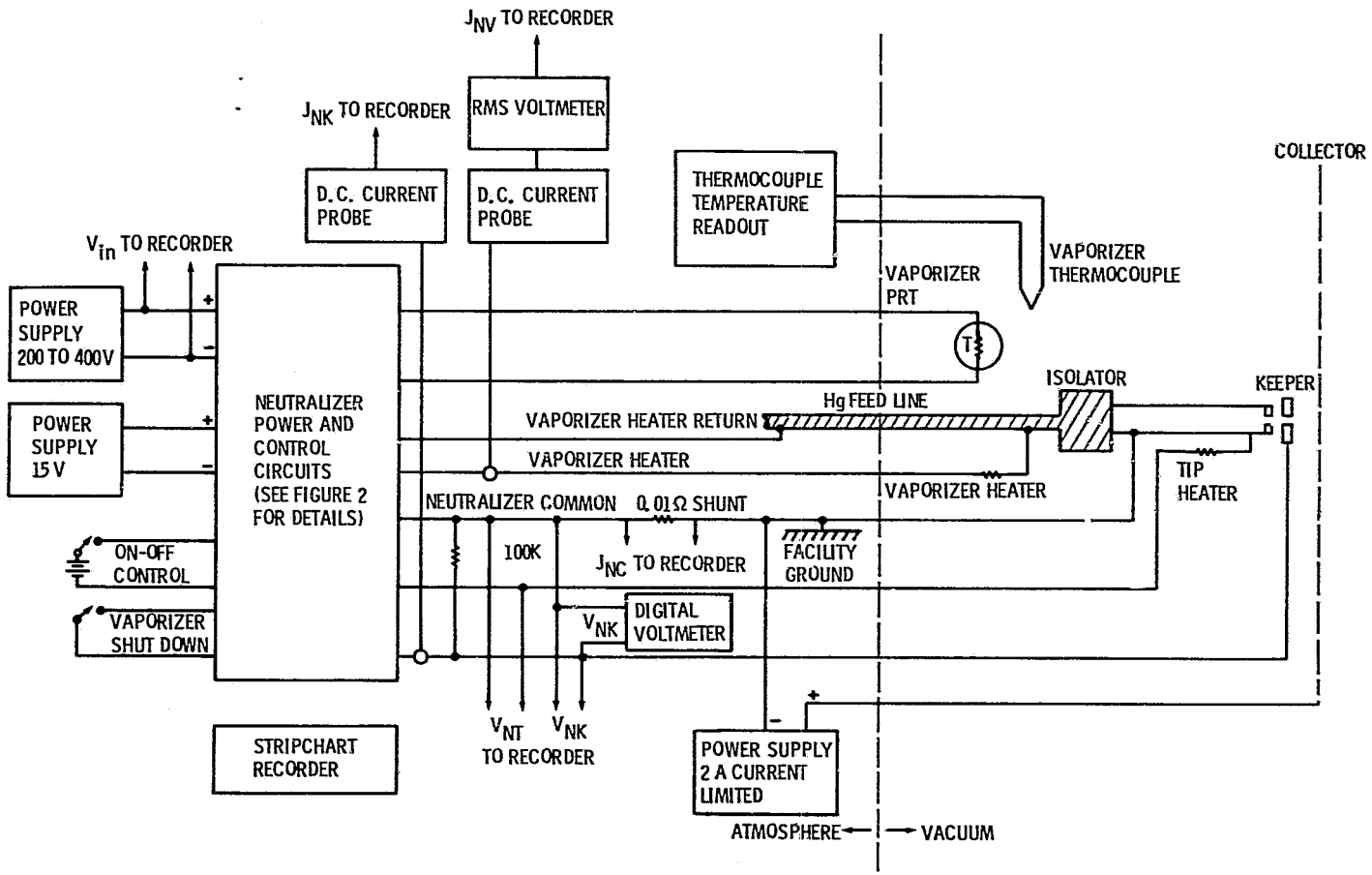

Figure 9. - Schematic diagram, 30cm Hg ion thruster neutralizer test.

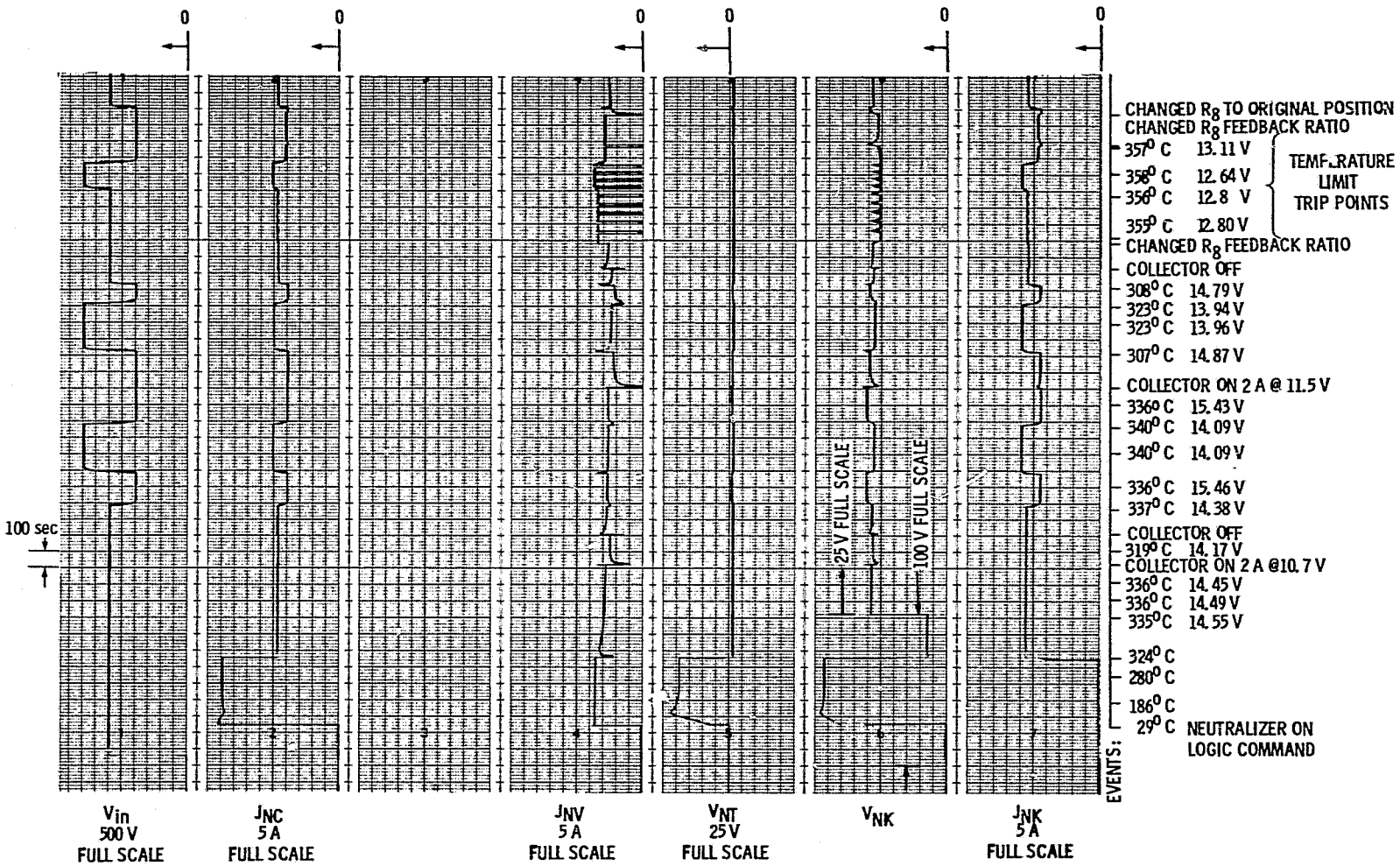

EVENTS: TEMPERATURES ARE VAPORIZER THERMOCOUPLE READINGS, VOLTAGES ARE V_{NK}

Figure 10. - Neutralizer test data.