https://ntrs.nasa.gov/search.jsp?R=19830010568 2020-03-21T05:35:04+00:00Z

General Disclaimer

One or more of the Following Statements may affect this Document

- This document has been reproduced from the best copy furnished by the organizational source. It is being released in the interest of making available as much information as possible.

- This document may contain data, which exceeds the sheet parameters. It was furnished in this condition by the organizational source and is the best copy available.

- This document may contain tone-on-tone or color graphs, charts and/or pictures, which have been reproduced in black and white.

- This document is paginated as submitted by the original source.

- Portions of this document are not fully legible due to the historical nature of some of the material. However, it is the best reproduction available from the original submission.

Produced by the NASA Center for Aerospace Information (CASI)

NASA CONTRACTOR REPORT 166429

(NASA-CR-166429) MARS ORBITER STUDY. VOLUME 2: MISSION DESIGN, SCIENCE INSTRUMENT ACCOMMODATION, SPACECRAFT DESIGN Final Report (Hughes Aircraft Co.) 426 p HC A19/MF A01 CSCL 22B G3/18

N83-18839

Unclas 08941

Mars Orbiter Study - Final Report
Volume 2, Mission Design, Science Instrument Accommodation, Spacecraft Design

R. Drean
D. MacPherson
D. Steffy
T. Vargas
B. Shuman
K. Anderson
B. Richards

MAR 1983
RECEIVED
NASA STI FACILITY
ACCESS DEPT.

CONTRACT NAS2- 11224
September 1982

NASA

NASA CONTRACTOR REPORT 166429

Mars Orbiter Study - Final Report
Volume 2, Mission Design, Science Instrument Accommodation, Spacecraft Design

Hughes Aircraft Company
El Segundo, California

Prepared for
Ames Research Center
Under Contract NAS2-11224

National Aeronautics and
Space Administration

Ames Research Center
Moffett Field, California 94035

CONTENTS

		Page
1.	Introduction	1-1
2.	Mission Analysis	2-1
	2.1 Launch/Arrival Window	2-1
	2.2 Climatology Mission	2-39
	2.3 Aeronomy Mission	2-71
3.	Instrument Accommodation	3-1
	3.1 Climatology Mission	3-5
	3.2 Climatology Payload Options	3-27
	3.3 Aeronomy Mission	3-51
4.	Spacecraft System Design	4-1
5.	Subsystem Description	5-1
	5.1 Structure/Harness Subsystem	5-1
	5.2 Propulsion Subsystem	5-17
	5.3 Communications Subsystem	5-35
	5.4 Data Handling Subsystem	5-65
	5.5 Command Subsystem	5-93
	5.6 Attitude Control Subsystem	5-113
	5.7 Power Subsystem	5-145
	5.8 Thermal Control Subsystem	5-171
	5.9 Integrated Propulsion Stage	5-185
6.	Other Program Elements	6-1
7.	Pre-Phase B Study Requirements	7-1

PRECEDING PAGE BLANK NOT FILMED

1. Introduction

This volume of the Mars Orbiter final report provides the detailed study results to back up the summary description contained in Volume 1. The material is divided into the following sections:

2. Mission Analysis
3. Instrument Accommodation
4. Spacecraft System Design
5. Subsystem Description
6. Other Program Elements
7. Pre Phase B Study Requirements

2.1 LAUNCH/ARRIVAL WINDOW

SELECTION OF LAUNCH WINDOW

This section describes the launch windows for the 1988 climatology and aeronomy missions and an optional 1990 launch for both missions.

SELECTION OF LAUNCH WINDOW

HUGHES

- CLIMATOLOGY - 1988
- AERONOMY - 1988
- 1990 OPTIONS

LAUNCH WINDOW SELECTION BASED ON SHUTTLE COST

The selected minimum cost launch window is the same for the climatology and aeronomy missions. Mass determines the Shuttle costs, so minimizing launch energy reduces the launch costs by offloading the injection stage. The length fraction almost equals the mass fraction for the aeronomy mission. If length fraction were to increase significantly, the optimum window would have a constant V_∞ to match the chosen solid MOI motor and a higher launch energy (C_3) than the baseline window. This strategy would give different windows for aeronomy and climatology.

The baseline mission has a 10 day launch window. Windows up to 50 days are possible, but they require increased C_3. Extra propellant in the SRM-1 injection motor (less offload) provides the additional C_3 but increases Shuttle cost.

LAUNCH WINDOW SELECTION BASED ON SHUTTLE COST

HUGHES

- INTEGRATED PROPULSION STAGE PERMITS SMALL SHUTTLE LENGTH UTILIZATION
- SHUTTLE MASS FRACTION DICTATES SHUTTLE COSTS
- MOI MOTOR DETERMINES MAXIMUM V_∞
  - 3.15 km/sec CLIMATOLOGY (STAR 31 MOTOR OFFLOADED 20%)
  - 3.05 km/sec AERONOMY (STAR 30B MOTOR FULLY LOADED)
- SHUTTLE COST MINIMIZED BY MINIMIZING LAUNCH ENERGY (C3) WITHIN V_∞ CONSTRAINTS
- AERONOMY AND CLIMATOLOGY LAUNCH WINDOWS ARE IDENTICAL (10 DAYS)
- LAUNCH WINDOWS UP TO 50 DAYS AVAILABLE AT INCREASED COST

INTEGRATED PROPULSION STAGE

The integrated propulsion stage consists of a solid rocket motor (SRM-1), its aluminum carrier support structure, and two STAR-6 solid rockets which spin up the ejected stage and spacecraft to 30rpm. Five moment-free attach points connect the carrier to the cradle. Two carrier outriggers provide reaction points for the frisbee ejection spring and pivot. United Technologies will qualify the SRM-1 for propellant loads from 4850 to 9700 kg. The fully loaded SRM-1 meets the requirements of the Mars Orbiter missions. Five Intelsat VI, four Leasat, and four SAL spacecraft will demonstrate the Hughes-patented frisbee deployment technique before it is needed for Mars Orbiter. The design details of the integrated propulsion system are Hughes proprietary.

INTEGRATED PROPULSION SYSTEM PROVIDES TRANS-PLANETARY INJECTION

HUGHES

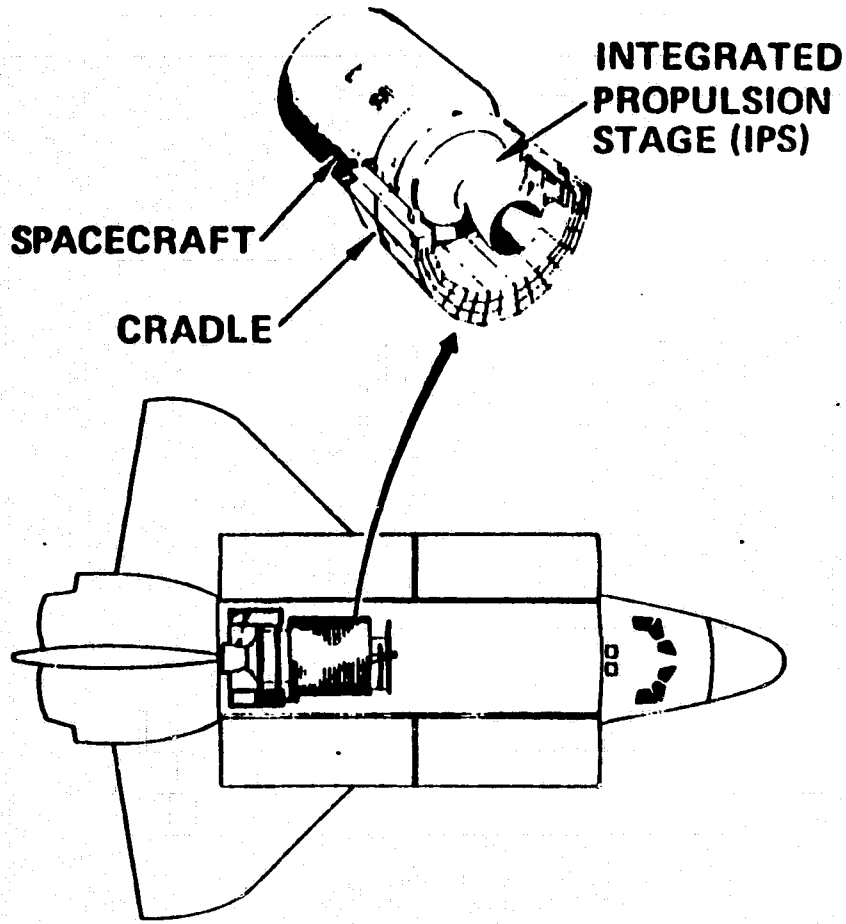

826610-23

- USE AS DESIGNED FOR INTELSAT VI APPLICATION
- SIMPLE SPINNING STAGE
- PATENTED "FRISBEE" DEPLOYMENT:
  - NO REQUIREMENT FOR SHUTTLE SPIN TABLE OR REMOTE MANIPULATOR ARM
  - DEMONSTRATED ON INTELSAT VI, LEASAT, SAL
- CRADLE PROVIDES STRUCTURAL SUPPORT IN SHUTTLE, PLUS POWER AND SIGNAL INTERFACES
- COST PER LAUNCH: $7 M COMPARED TO $70 M FOR IUS

ORIGINAL PAGE IS OF POOR QUALITY

INTEGRATED PROPULSION STAGE CAPABILITY FOR MARS MISSIONS

The figure shows the mass (including the spacecraft adapter) injected by the IPS from the standard Shuttle parking orbit. Fully loaded, the IPS carries 9750 Kg of propellant, with a C_3 capability above the 11.6 Km^2/sec^2 needed to reach Mars. The maximum qualified offload is 50%. Both the climatology and aeronomy missions require propellant offloadings (20.5% and 36.6%) less than this bound.

INTEGRATED PROPULSION STAGE CAPABILITY FOR MARS MISSIONS

HUGHES

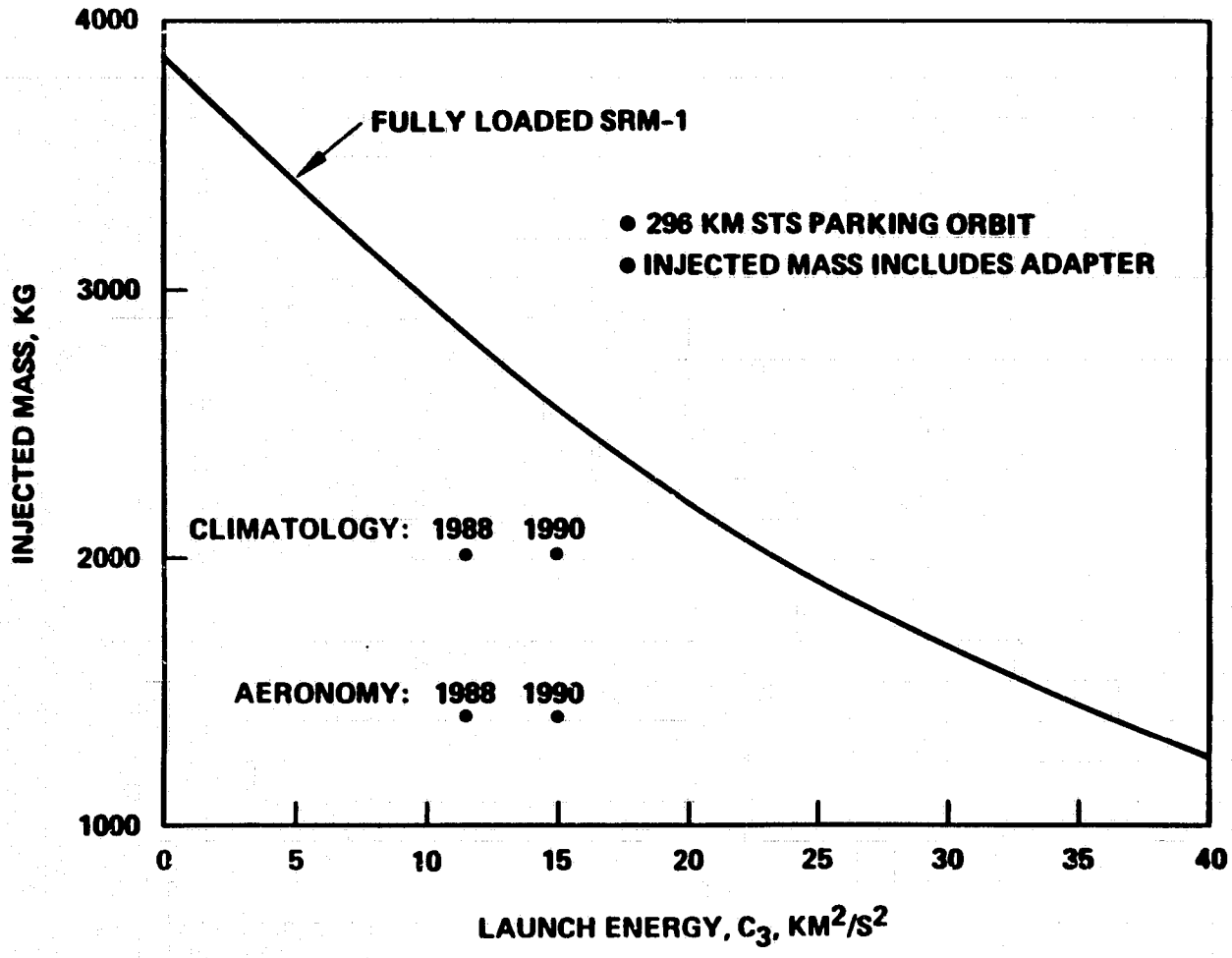

826514–38

ORIGINAL PAGE IS OF POOR QUALITY

SHUTTLE MASS FRACTION VS. LAUNCH ENERGY

The Shuttle mass fraction (and SRM-1 loading) depend on the launch energy C_3. Increasing SRM-1 propellant provides additional launch energy but increases the Shuttle mass fraction and launch cost. The SRM-1 propellant load corresponding to the required C_3 of 11.64 km^2/sec^2 is 7706 kg and 6128 kg for climatology and aeronomy missions respectively.

SHUTTLE MASS FRACTION VS. LAUNCH ENERGY

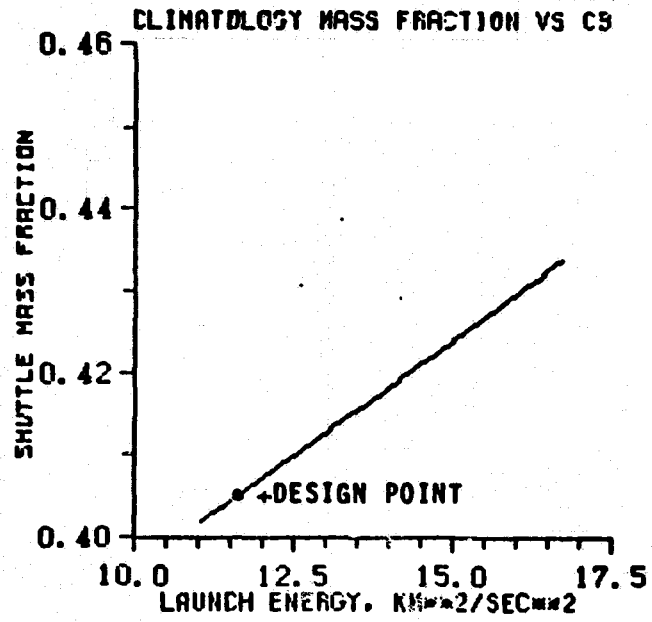

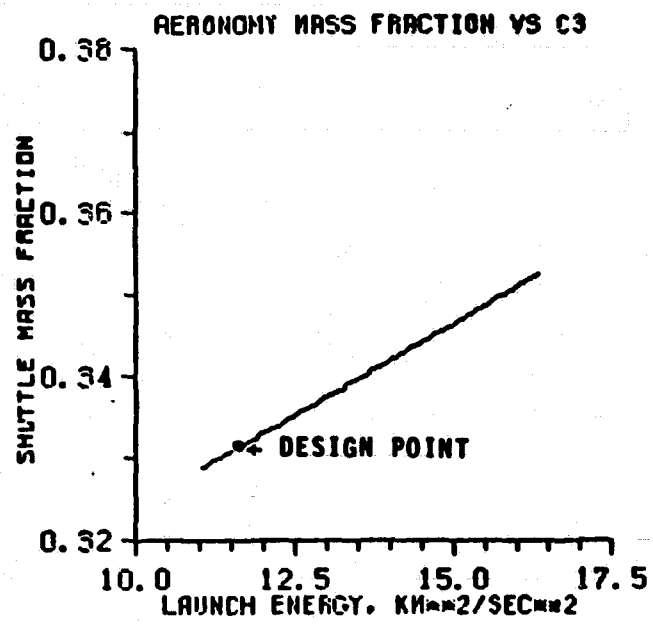

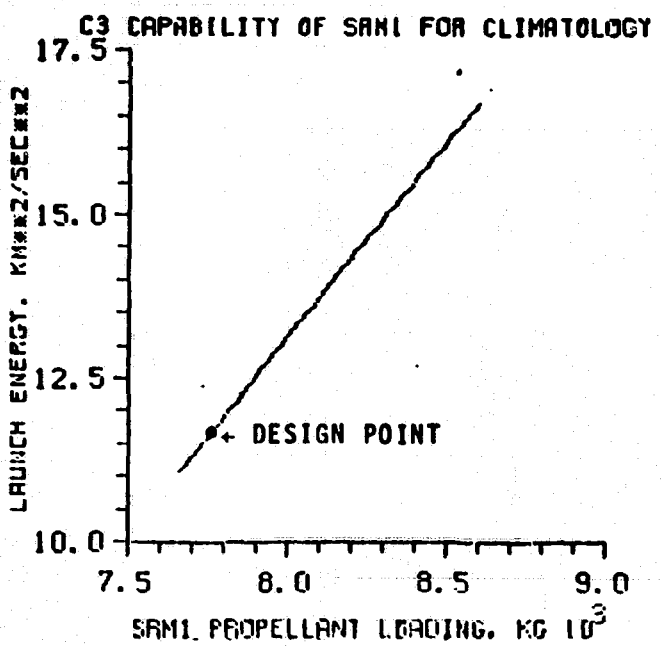

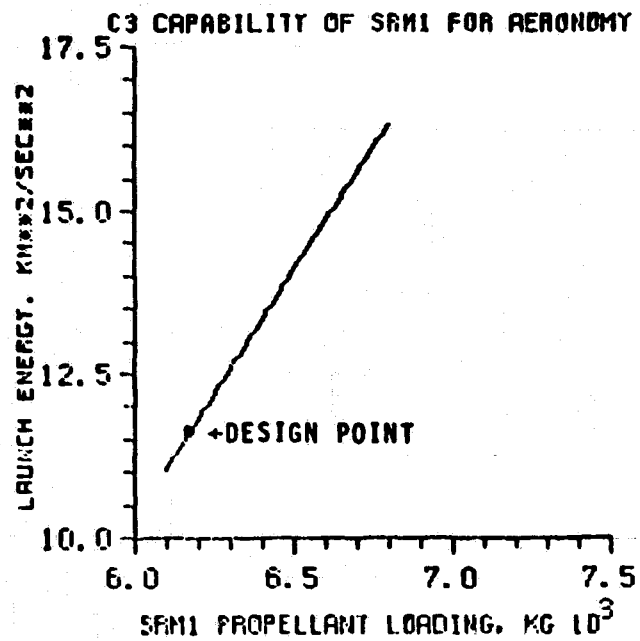

ORIGINAL PAGE IS
OF POOR QUALITY

SHUTTLE UTILIZATION

Both missions have compact launch configurations, so launch mass determines the Shuttle cost. The bodies of the HS-376 Mars Orbiters both telescope to 8 feet in length for launch. The long STAR-31 MOI motor, even with its shortened nozzle, protrudes from the aft end of the climatology orbiter. This requires a 5'4" adapter. However, the STAR-31 and high IPS propellant loading keep the Shuttle mass fraction of 0.405 above the length fraction.

The lighter STAR-30 MOI motor and corresponding greater SRM-1 offload for the aeronomy mission reduce the Shuttle mass fraction to 0.332. Structural design sets the 45° spacecraft adapter length giving an aeronomy length fraction almost equal to mass fraction.

SHUTTLE UTILIZATION

HUGHES

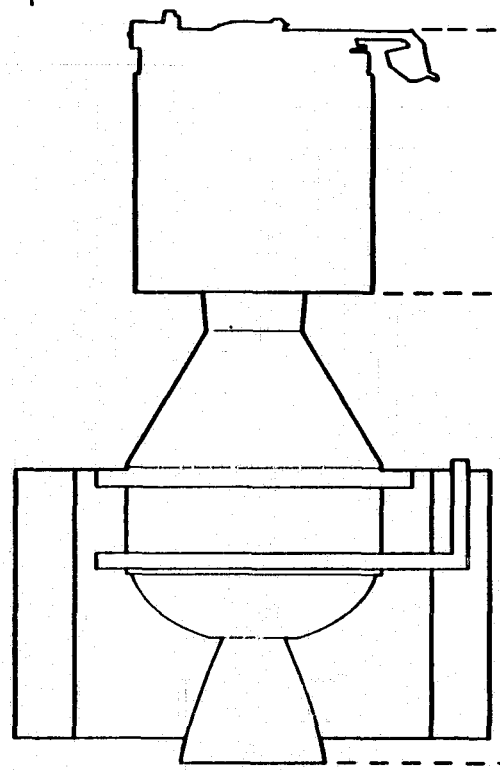

CLIMATOLOGY

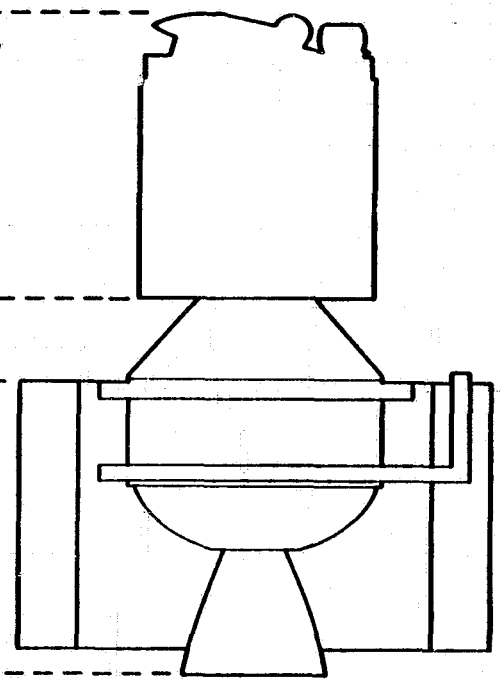

AERONOMY

LENGTH, FT	MASS, KG		LENGTH, FT	MASS, KG
8.00	1,924	SPACECRAFT SEPARATED	8.00	1,344
5.31	75	ADAPTER	2.59	60
8.87	9,956	INTEGRATED PROPULSION STAGE	8.87	8,378
0.24	–	CLEARANCE	0.24	–
22.42	11,955 (26,356 LB)	TOTAL	19.70	9,782 (21,565 LB)
0.374	0.405	SHUTTLE UTILIZATION FACTOR	0.328	0.332

826514–34

ORIGINAL PAGE IS OF POOR QUALITY

MARS ORBITER MASS BREAKDOWN

The table lists the Shuttle payload for the two missions. Reaching the tighter climatology orbit at Mars requires a heavier MOI motor (1038 kg load), which in turn requires 1578 kg more SRM-1 propellant for the same C_3 as the aeronomy mission.

Only the cradle remains in the Shuttle bay. The STAR-6 spin motors burn shortly after ejection.

MARS ORBITER MASS BREAKDOWN, kg

HUGHES

	CLIMATOLOGY	AERONOMY
SPACECRAFT SEPARATED		
SPACECRAFT DRY	650	600
BIPROPELLANT	236	236
MOI MOTOR EXPENDABLES	1038	508
	1924	1344
ADAPTER	75	60
INTEGRATED PROPULSION STAGE AND CRADLE		
SRM-1 BURN OUT	650	650
CARRIER	275	275
STAR-6 BURN OUT	3	3
SRM-1 EXPENDABLES	7756	6178
STAR-6 EXPENDABLES	7	7
CRADLE	1265	1265
	9956	8378
TOTAL	11955	9782

ORIGINAL PAGE IS
OF POOR QUALITY

CONTOURS OF CONSTANT V_∞ AND C_3

Contours of constant V_∞ and C_3 are shown. The MOI motors force V_∞ to be less than 3.05 km/sec and 3.15 km/sec for the aeronomy and climatology missions, respectively. Because the required small value of C_3 corresponds to a V_∞ less than 3.0, launch energy alone determines the baseline launch arrival window selection.

CONTOURS OF CONSTANT V_∞ AND C_3

HUGHES

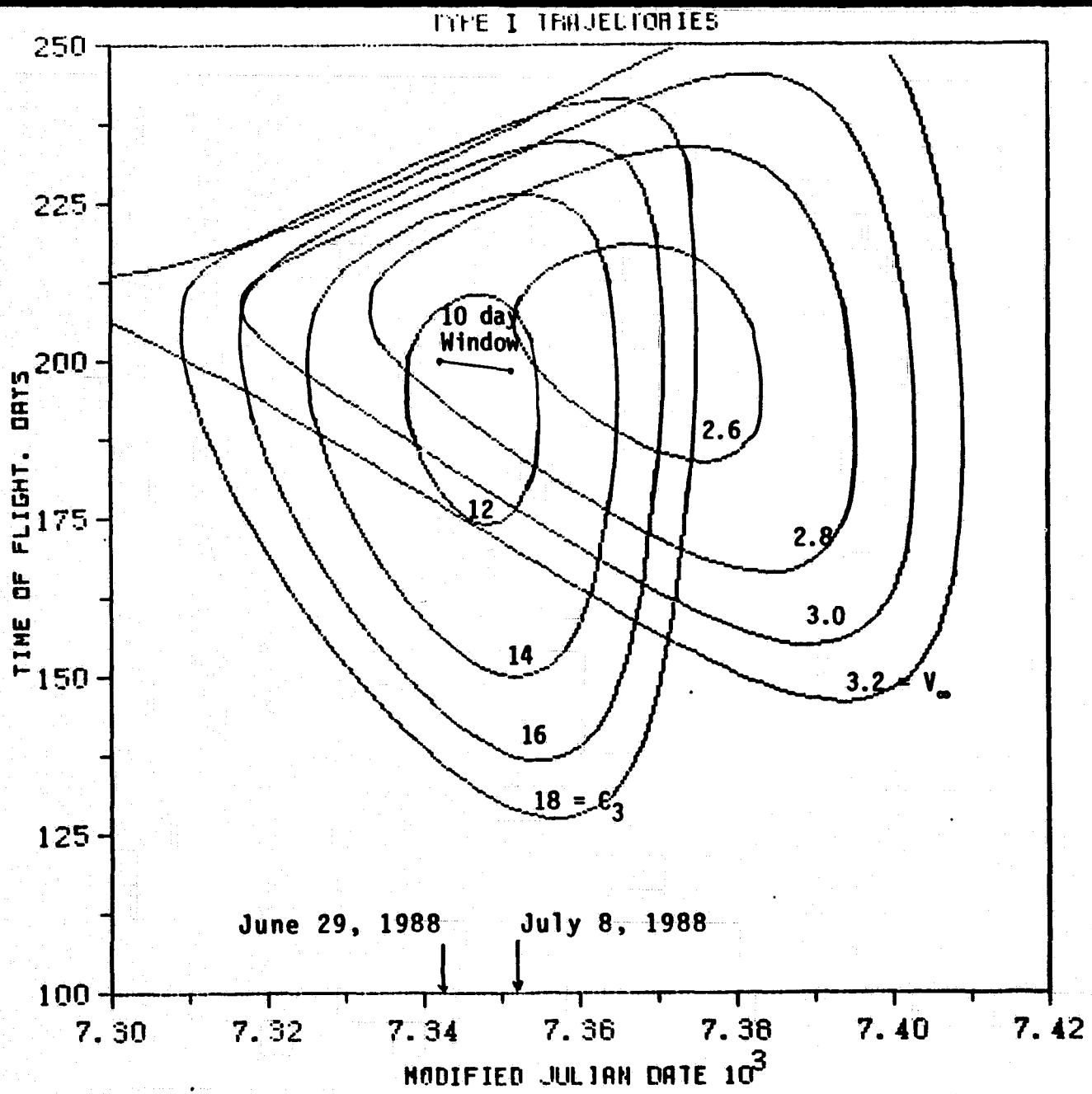

ORIGINAL PAGE IS OF POOR QUALITY

BASELINE LAUNCH WINDOW

The launch window represents the 10 days in 1988 with the lowest launch energy (C_3) to Mars. Minimizing C_3 on each day determines the flight time. Constraining declination of the launch asymptote below 28.5° allows a standard due east Shuttle launch. The V_∞ magnitude is below the MOI motor requirements of 3.05 and 3.15 km/sec for the two missions.

BASELINE LAUNCH WINDOW

HUGHES

	FIRST DAY OF WINDOW	LAST DAY OF WINDOW
LAUNCH DATE	JUNE 29, 1988	JULY 8, 1988
FLIGHT TIME, DAYS	194.69	192.89
DECLINATION OF LAUNCH ASYMPTOTE, DEGREES	14.55	13.25
LAUNCH ENERGY (C_3), KM^2/SEC^2 (MIN = 11.50)	11.64	11.62
DECLINATION OF ARRIVAL ASYMPTOTE, DEGREES	3.70	3.17
V_∞ MAGNITUDE, KM/SEC	2.79	2.69
HOUR ANGLE OF V_∞ RELATIVE TO SUN	7:45 am	7:31 am

ORIGINAL PAGE IS OF POOR QUALITY

BASELINE WINDOW CHARACTERISTICS

The launch window parameters all vary with launch date. Except C_3, which obtains a minimum value of 11.50 km^2/sec^2 at the middle of the window, the maximum and minimum value for each parameter occur on the first and last days of the window.

BASELINE WINDOW CHARACTERISTICS

HUGHES

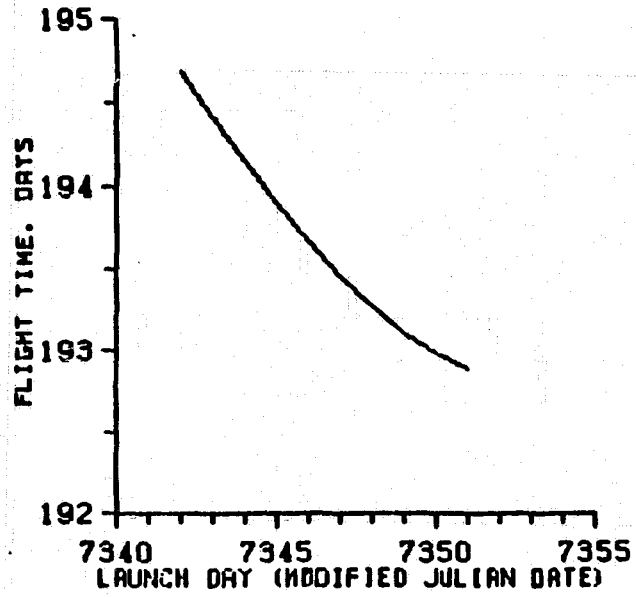

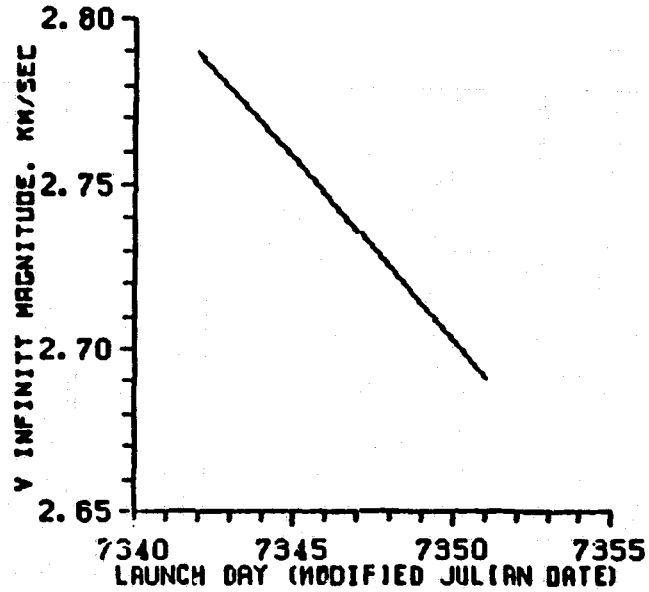

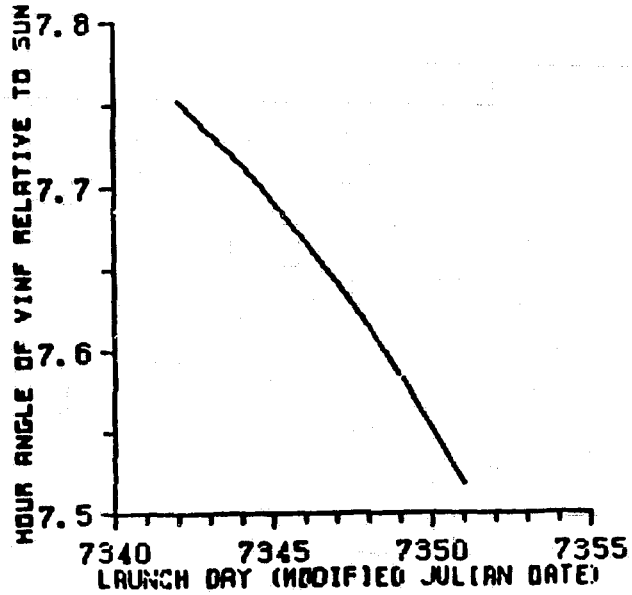

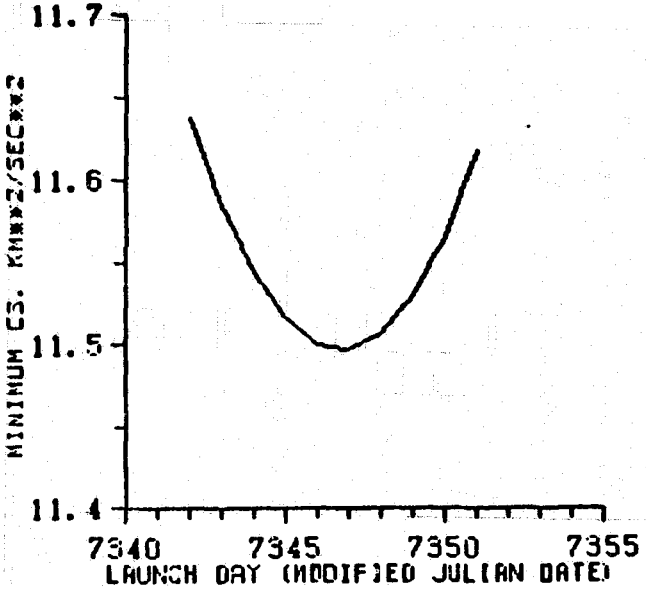

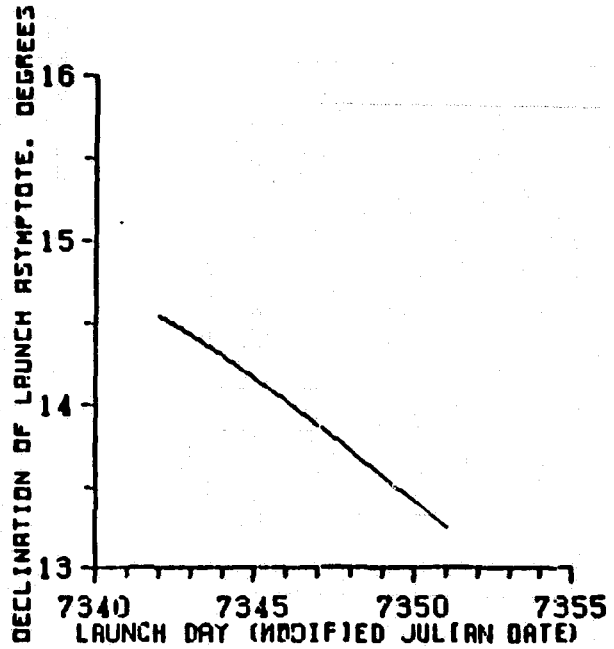

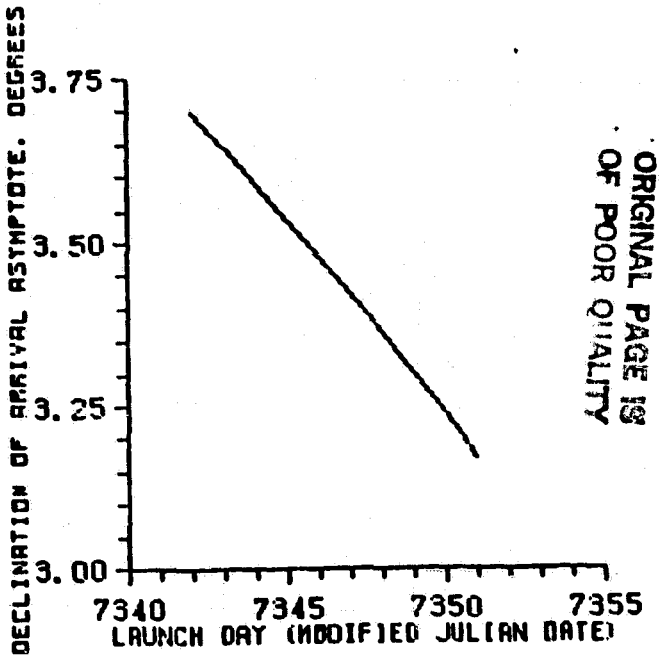

ORIGINAL PAGE IS
OF POOR QUALITY

INCREASE LAUNCH WINDOW LENGTH

Launch window length determines the required C_3. The higher IPS capability needed for higher C_3 requires more SRM-1 propellant and a higher Shuttle mass fraction. Launch cost therefore increases for longer launch windows. Windows up to 60 days are available at increased Shuttle cost, as shown later.

INCREASE LAUNCH WINDOW LENGTH

HUGHES

- INCREASED C_3 REQUIRES ADDITIONAL SRM-1 PROPELLANT
- LARGER SHUTTLE MASS FRACTION INCREASES LAUNCH COST

SHUTTLE MASS FRACTION VS. LAUNCH WINDOW LENGTH

Longer launch windows require additional C_3 capability and therefore additional SRM-1 propellant, and a larger Shuttle mass fraction. The graph shows the increasing launch cost for longer launch windows for both missions. Shuttle cost is directly proportional to Shuttle mass fraction. Assuming a 1988 dedicated launch costs $100 million and including the 4/3 factor for a shared payload bay, a 30 day window costs $1.0 million more than a 10 day window for the climatology mission or $700,000 more for the aeronomy mission.

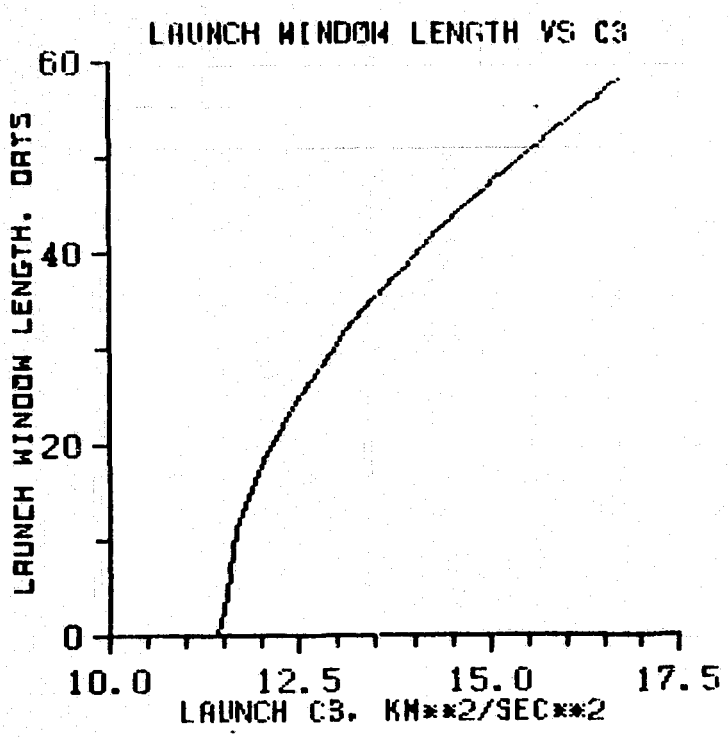

HUGHES

SHUTTLE MASS FRACTION VS.
LAUNCH WINDOW LENGTH

ORIGINAL PAGE IS
OF POOR QUALITY

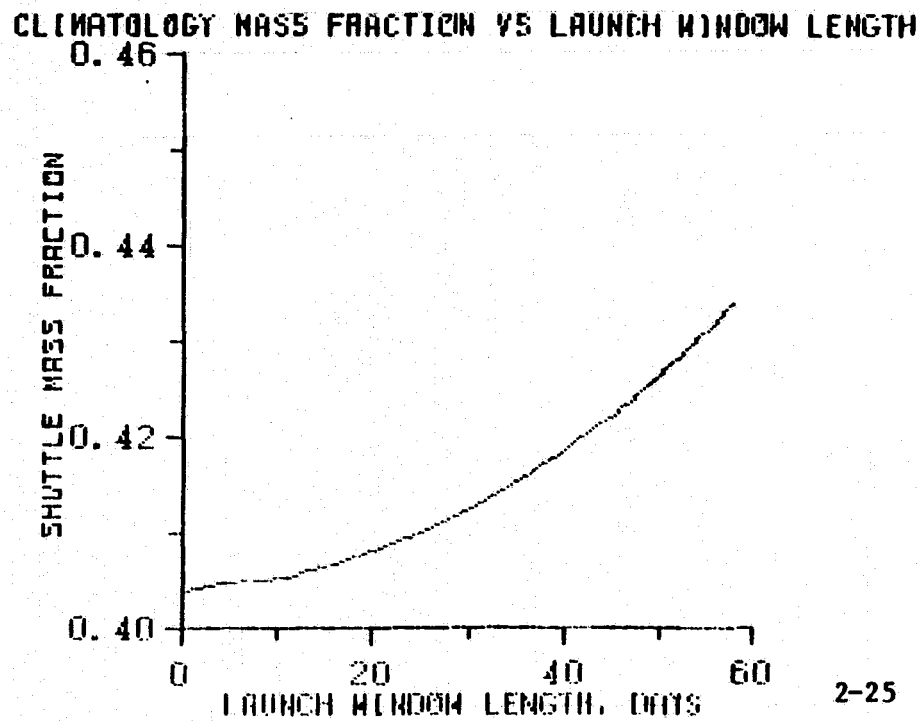

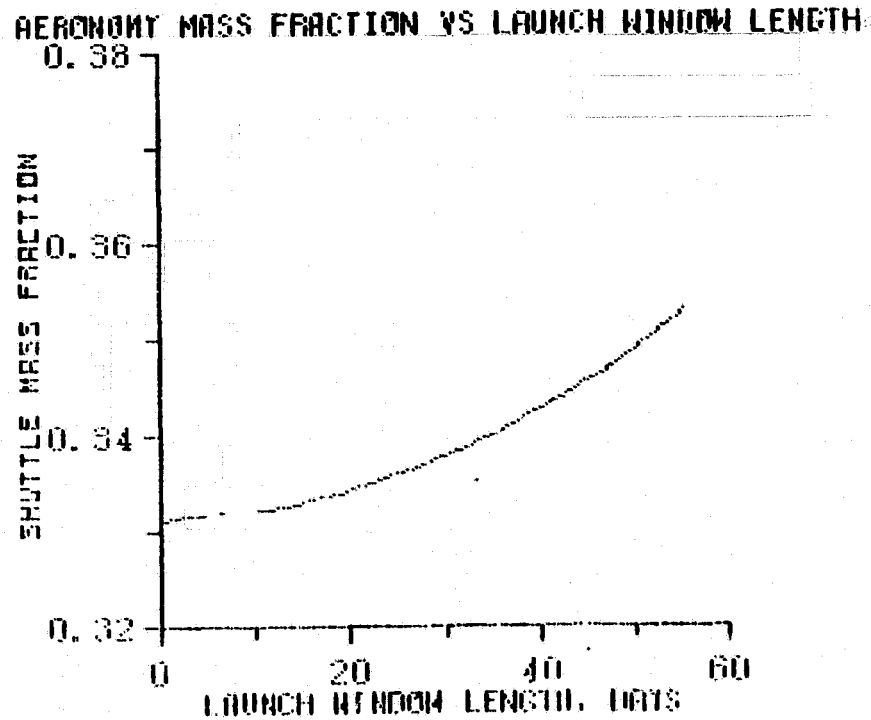

EXTENDED LAUNCH WINDOW DESCRIPTION

The minimum C_3 does not increase symmetrically for launch dates before and after the optimum date. Therefore, extended windows are not symmetric about the 10 day baseline window. The table lists the opening and closing dates and required C_3 for various window lengths up to 50 days.

EXTENDED LAUNCH WINDOW DESCRIPTION

HUGHES

WINDOW LENGTH DAYS	MAXIMUM C3	FIRST DAY	LAST DAY	SHUTTLE MASS FRACTION, AERONOMY	SHUTTLE MASS FRACTION, CLIMATOLOGY
10	11.64	JUNE 29, 1988	JULY 8, 1988	.332	.405
20	12.10	JUNE 24	JULY 13	.334	.408
30	12.94	JUNE 18	JULY 17	.337	.413
40	14.05	JUNE 13	JULY 22	.342	.419
50	15.42	JUNE 07	JULY 26	.348	.426

ORIGINAL PAGE IS
OF POOR QUALITY

EXTENDED (50 DAY) WINDOW CHARACTERISTICS

The graphs show the behavior of the six launch parameters for a 50-day window. All the dates in a fixed length launch window have minimum C_3s below the value of the first and last days of the window. These end values determine the C_3 capability required to fly the selected-length window. (Graphically, the length of a horizontal line inside the minimum C_3 curve is the launch window length at the corresponding C_3.) The magnitude of V_∞ stays below 3.05 km/sec, the capability of the aeronomy MOI motor. Launch asymptote declination lies below 28.5°, permitting a due-east Shuttle launch. The hour angle at arrival for the climatology mission at the beginning of the window is closer to the desired 1:30 p.m. orbit, reducing the drift time.

EXTENDED (50 DAY) WINDOW CHARACTERISTICS

HUGHES

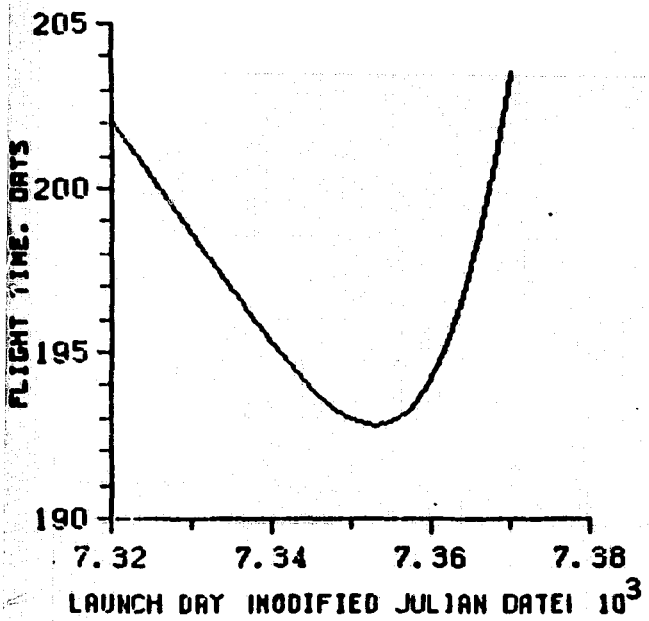

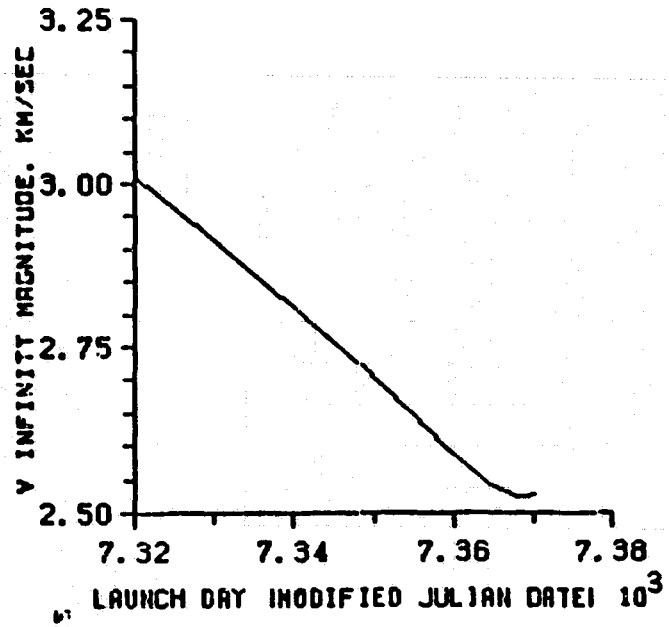

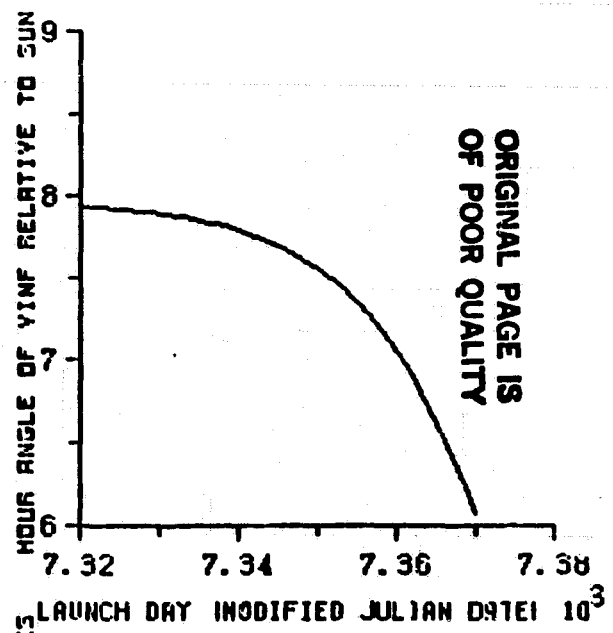

ORIGINAL PAGE IS OF POOR QUALITY

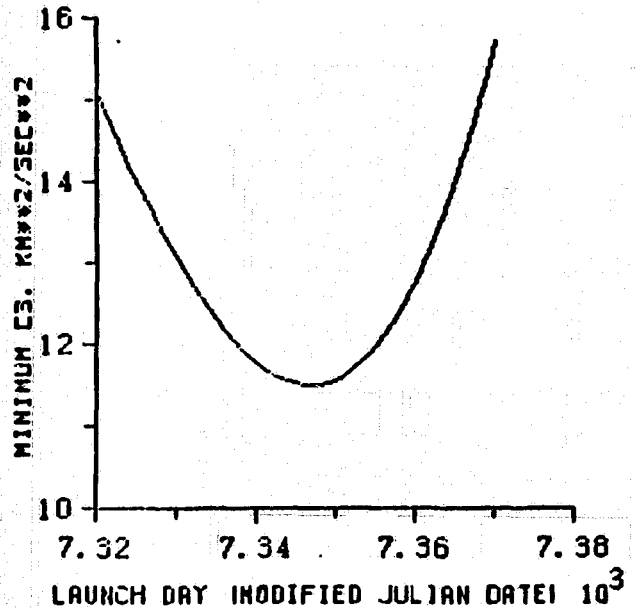

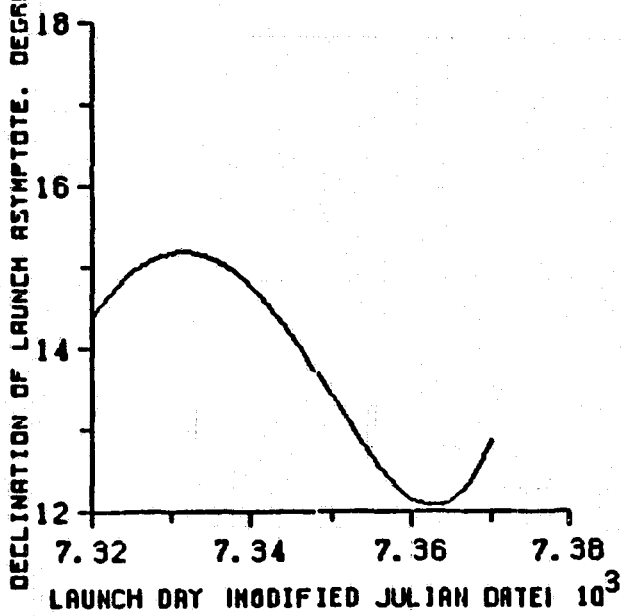

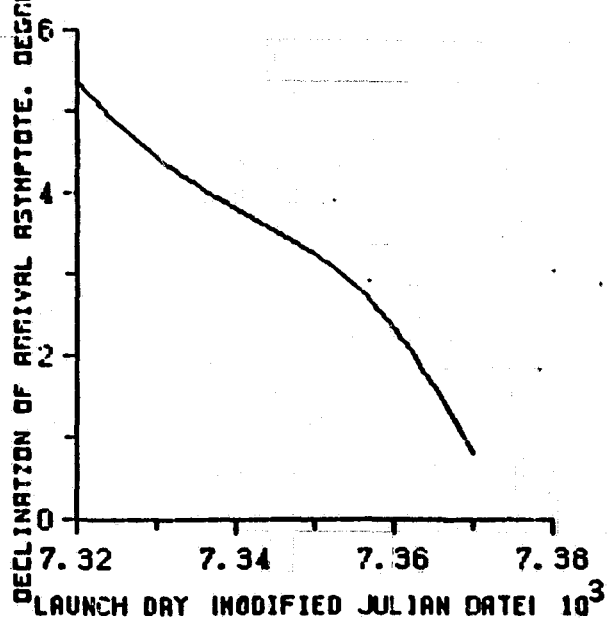

1990 OPTIONS

The 1990 opportunity is not similar to 1988. Type I 1990 trajectories, optimal for 1988 due to low launch energy, have launch asymptotes with declinations well above 28.5°, requiring either a non-standard Shuttle orbit or a non-optimum attitude at injection. Either case severely reduces performance. Type II trajectories require the lowest launch energy for the 1990 window. The longer flight time and slightly higher launch energy makes the 1990 opportunity less favorable than the 1988 opportunity.

1990 OPTIONS

HUGHES

- HIGH LAUNCH ASYMPTOTE DECLINATIONS MAKE TYPE I TRAJECTORIES UNDESIRABLE

- TYPE II TRAJECTORIES ARE 1990 BASELINE

- V_∞ CONSTRAINTS ARE FACTORS IN 1990 WINDOW SELECTION

  3.05 KM/SEC FOR AERONOMY

  3.15 KM/SEC FOR CLIMATOLOGY

- 1990 OPPORTUNITY LESS FAVORABLE THAN 1988 OPPORTUNITY

CONTOURS OF CONSTANT V_∞ and C_3 FOR 1990 OPTIONS

Contours of constant V_∞ and C_3 for the 1990 opportunity are shown below. Unlike 1988, V_∞ less than the motor capability requires flight times with C_3 larger than optimal. The C_3 constrains the start of the window; the V_∞ limit sets the last day. (The C_3 constrained both ends of the 1988 window.) A 10 day window in 1990 has the same Shuttle cost as a 40 day window in 1988. For the climatology mission, the longer flight time of Type II trajectories is partially offset by the reduced drift time which results from arrival hour angles much closer to the desired sun synchronous orbit (1:30 to 3:00 p.m.). A small C_3 penalty allows capture directly into the desired orbit. Since V_∞ constrains the launch window, the 1990 opportunity has different windows for climatology and aeronomy.

CONTOURS OF CONSTANT V_∞ AND C_3 FOR 1[illegible]0 OPTIONS

HUGHES

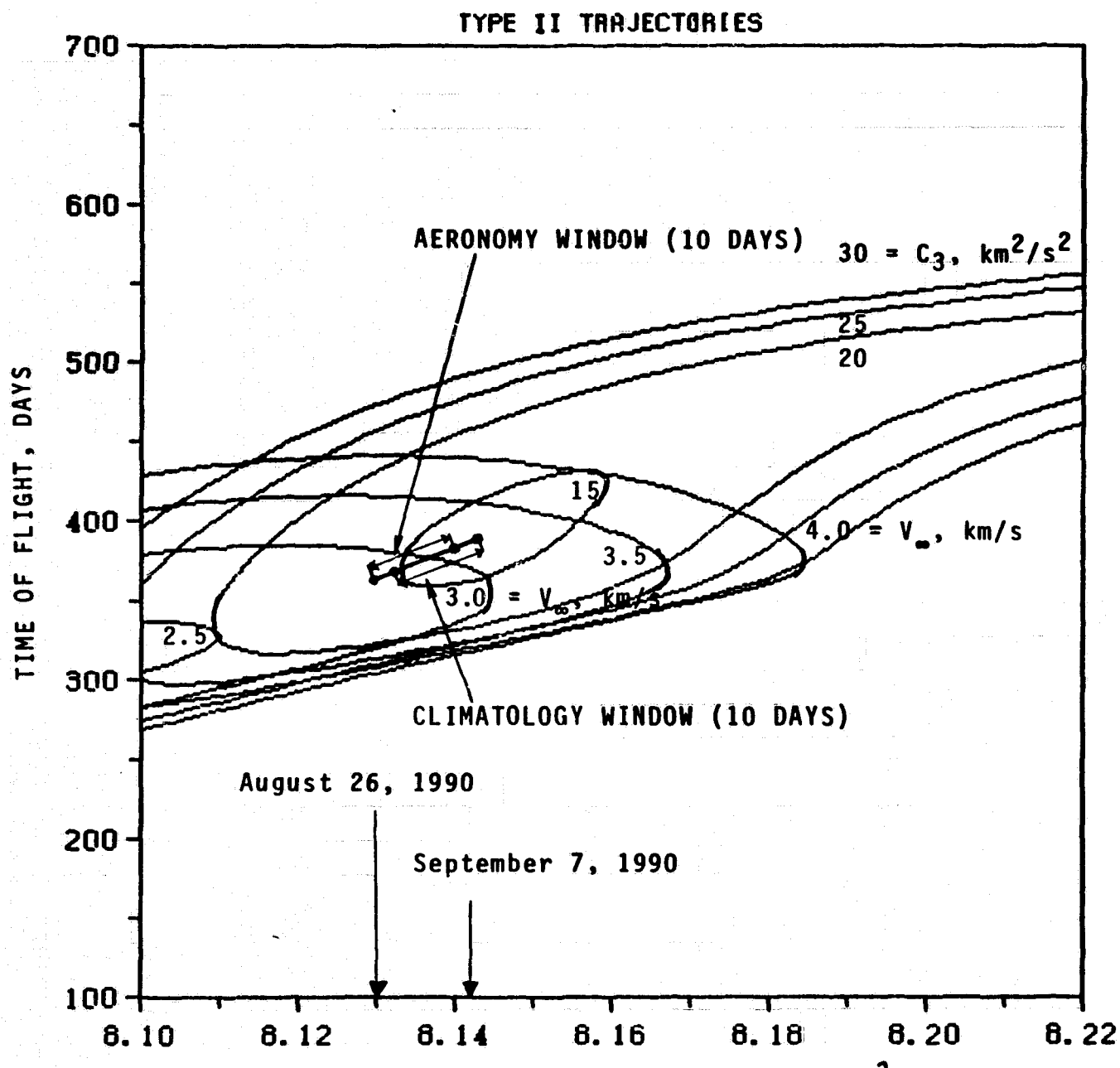

ORIGINAL PAGE IS OF POOR QUALITY

1990 CLIMATOLOGY LAUNCH WINDOW

The figure details a 10 day minimum Shuttle cost 1990 launch window for the climatology mission. The climatology window requires less C_3 than aeronomy (next page) because the bigger MOI motor allows a larger V_∞ at Mars. This shifts the window slightly to a lower C_3. The initial hour angle of the orbit at Mars lies between 3:06 and 3:40 p.m.

1990 CLIMATOLOGY LAUNCH WINDOW

HUGHES

	FIRST DAY OF WINDOW	LAST DAY OF WINDOW
LAUNCH DATE	Aug 29, 1990	Sept 7, 1990
FLIGHT TIME, DAYS	370.19	385.44
DECLINATION OF LAUNCH ASYMPTOTE, DEGREES	7.95	12.75
LAUNCH ENERGY (C_3) KM^2/SEC^2	14.94	14.41
DECLINATION OF ARRIVAL ASYMPTOTE, DEGREES	29.10	23.68
V_∞ MAGNITUDE, KM/SEC	2.90	3.14
HOUR ANGLE OF V_∞ RELATIVE TO SUN	3:40 pm	3:06 pm

1990 AERONOMY LAUNCH WINDOW

A 10 day minimum Shuttle cost 1990 launch window for the aeronomy mission is shown. It begins and ends 3 days sooner than the comparable climatology window described on the previous page.

1990 AERONOMY LAUNCH WINDOW

HUGHES

	FIRST DAY OF WINDOW	LAST DAY OF WINDOW
LAUNCH DATE	AUG 26, 1990	SEPT 4, 1990
FLIGHT TIME, DAYS	365.67	380.01
DECLINATION OF LAUNCH ASYMPTOTE, DEGREES	6.71	10.97
LAUNCH ENERGY (C_3), KM^2/SEC^2	15.27	14.51
DECLINATION OF ARRIVAL ASYMPTOTE, DEGREES	30.58	25.66
V_∞ MAGNITUDE, KM/SEC	2.83	3.05
HOUR ANGLE OF V_∞ RELATIVE TO SUN	3:49 pm	3:18 pm

PRECEDING PAGE BLANK NOT FILMED

2.2 CLIMATOLOGY MISSION

CLIMATOLOGY MISSION ANALYSIS

This section describes the climatology mission interplanetary trajectory, orbit insertion, and the following on-orbit behavior. Topics include an analysis of the Mars capture orbit errors, a description of the orbit plane dynamics, sun/earth/spacecraft geometries, and a budget of the maneuver propellant.

CLIMATOLOGY MISSION ANALYSIS

HUGHES

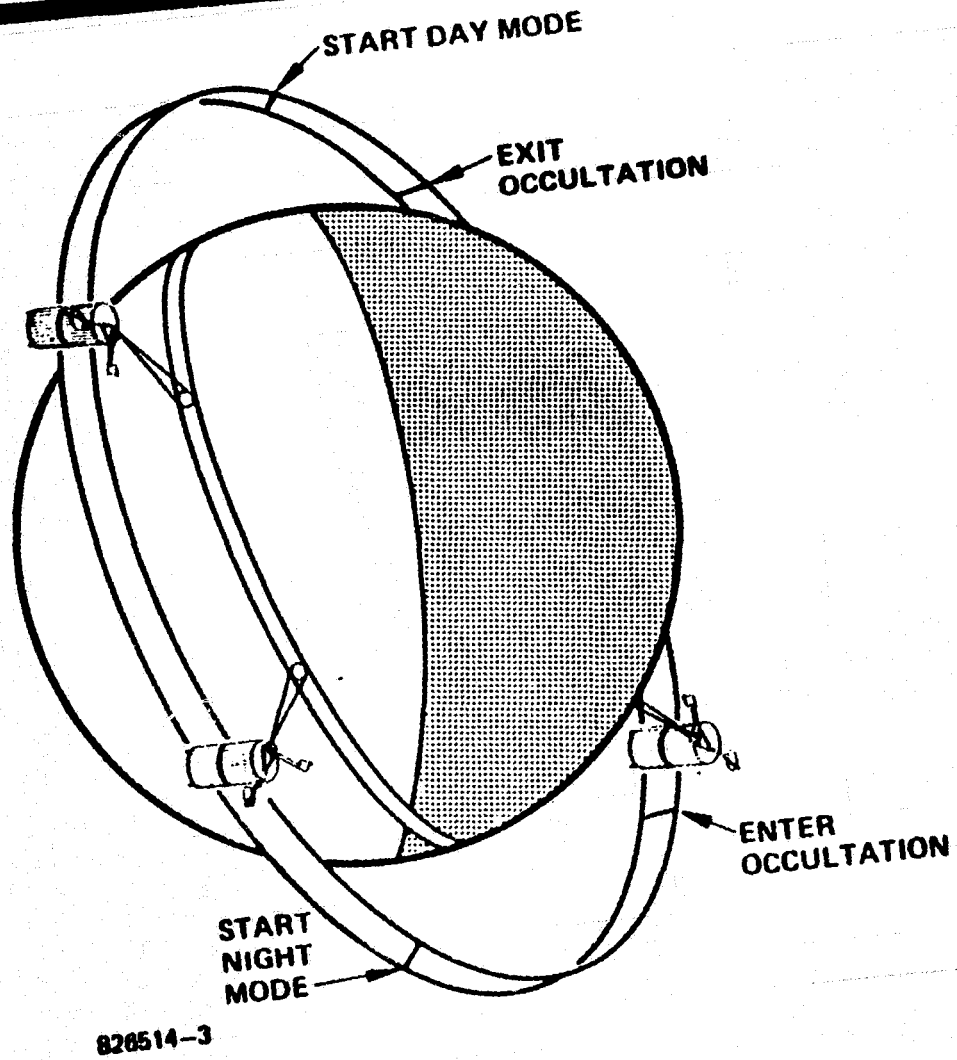

- INTERPLANETARY TRAJECTORY
- ORBIT CHARACTERISTICS
- MISSION PERFORMANCE

ORIGINAL PAGE IS OF POOR QUALITY

INTERPLANETARY TRAJECTORY TYPE I

The preceding section details the launch window analysis for the climatology mission which was selected for minimum launch cost. The table summarizes the main features of the transit trajecotry for the first day of the launch window. The initial local hour angle at arrival is 7:45 a.m. This requires an orbit adjustment to reach the desired operational hour angle (between 1:30 and 3:00 p.m.).

INTERPLANETARY TRAJECTORY TYPE I

• LAUNCH DATE	29 JUNE 1988
• ARRIVAL DATE	9 JAN 1989
• TIME OF FLIGHT, DAYS	194.69
• C_3, KM^2/SEC^2	11.64
• DECLINATION OF LAUNCH ASYMPTOTE	14.55^0
• V_∞ , KM/SEC	2.79
• DECLINATION OF ARRIVAL ASYMPTOTE	3.70^0
• TCM ΔV, M/S	96
• INITIAL HOUR ANGLE	7:45 A.M.

TRAJECTORY CORRECTION MANEUVER REQUIREMENTS

Uncertainties in the injection stage pointing accuracy and motor performance cause errors in the interplanetary trajectory. The Intelsat VI design specifies less than 0.5% impulse uncertainty in the IPS motor; the 3° pointing error is an RSS value derived from the STS and IPS specifications. All these errors are 3σ values.

A ΔV maneuver during cruise corrects the resulting errors in the trajectory. Later, a second TCM removes any remaining error and a third, minor TCM provides the final trim before MOI.

TRAJECTORY CORRECTION MANEUVER REQUIREMENTS

HUGHES

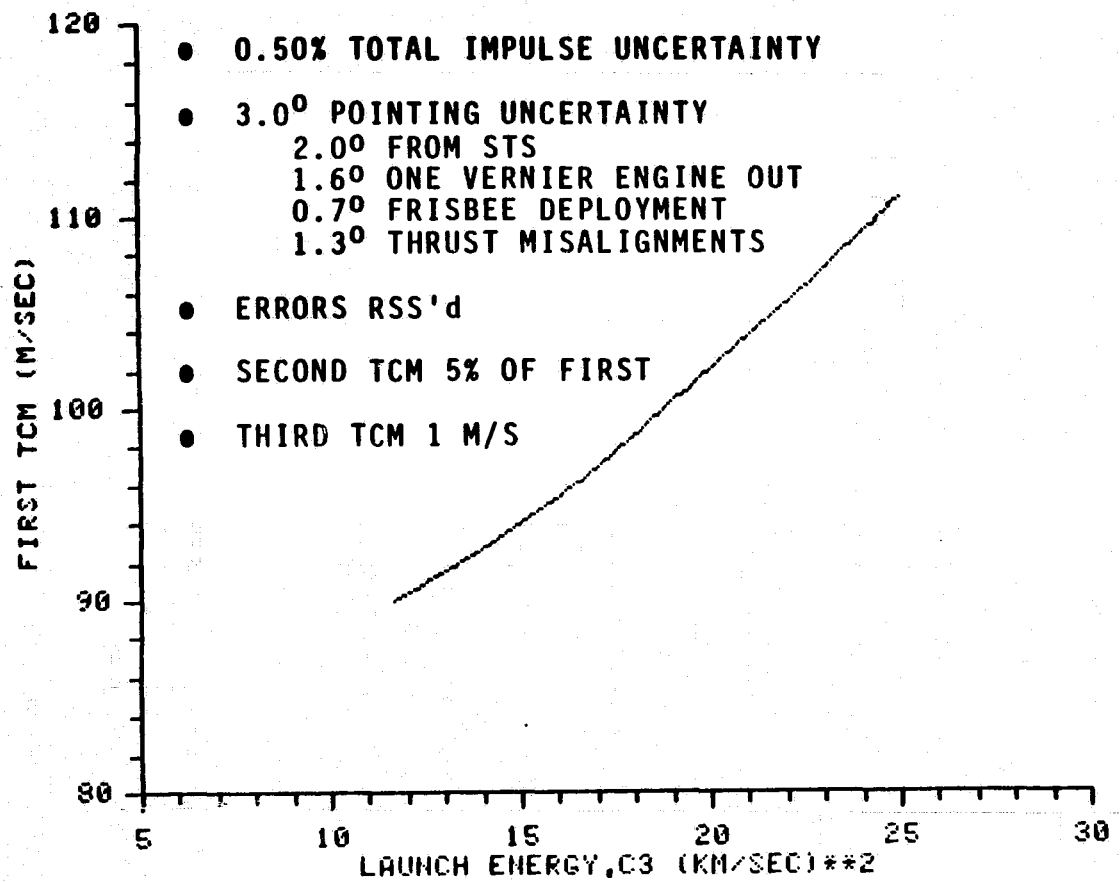

ORIGINAL PAGE IS OF POOR QUALITY

MARS TARGETING ERROR ANALYSIS

According to informal conversations with JPL, the Viking II B-plane error ellipse was 250 x 60 km with the semi-major axis oriented 119° from the B·T direction. Since the Mars Orbiter error ellipse orientation is unknown at this time, the analysis assumes a B-plane error of 250 km circular. The Mars gravitational field focusses these errors to a 215 km dispersion in periapsis altitude and 2.1° dispersion in capture orbit inclination.

MARS TARGETING ERROR ANALYSIS

HUGHES

INPUTS	VIKING II B-PLANE ERRORS (JPL)
	250 x 60 km ERROR ELLIPSE
	SEMI-MAJOR AXIS 119^{0} FROM B•T
ASSUMPTIONS	250 km CIRCULAR B-PLANE ERROR
	WORST CASE PIERCE POINT
RESULTS	PERIAPSIS ALTITUDE DISPERSION - 215 km
	ORBIT INCLINATION DISPERSION - 2.1^{0}

CAPTURE ORBIT CORRECTION

In addition to the targeting dispersions, the motor performance uncertainty of $\pm$.63% contributes to orbit insertion errors. Nominally 10 kg of bipropellant provides the apoapsis and periapsis ΔV necessary to trim the orbit to 300 km circular. An additional 42.3 kg of bipropellant corrects the RSS errors.

CAPTURE ORBIT CORRECTION

- ERROR SOURCES
  - 2.1 DEG ERROR IN ORBIT PLANE INCLINATION
  - 215 KM ERROR IN INSERTION POINT ALTITUDE
  - 0.63% MOTOR PERFORMANCE UNCERTAINTY

	ΔV, M/S
• ΔV FOR NOMINAL PARAMETERS	
- APOAPSIS	14.7
- PERIAPSIS	19.8
• RSS ΔV TO COMPENSATE FOR TARGETING ERRORS	
- APOAPSIS	80.2
- PERIAPSIS	71.1
TOTAL ΔV	185.8

OPERATIONAL ORBIT REQUIREMENTS

The table lists the ARC specifications for the baseline climatology mission. The circular orbit has an altitude of 300 km and a period of 1.893 hours. A sun synchronous orbit is obtained by selecting an inclination of 92.64° to precesses the orbit line of nodes and match Mars' mean motion. However, the ellipticity of Mars' orbit causes the sun angle to vary between 1:30 p.m. and 3:00 p.m.

ORBIT REQUIREMENTS

HUGHES
HUGHES AIRCRAFT COMPANY

- ALTITUDE = 300 KM (CIRCULAR)
- SUN SYNCHRONOUS INCLINATION = 92.64^{0}
- LOCAL HOUR ANGLE BETWEEN 1:30 PM AND 3:00 PM

HOUR ANGLE VARIATION

The initial hour angle of the orbit is 7:45 a.m. The initial orbit inclination causes the orbit to precess to the desired 1:30 to 3:00 p.m. sun synchronous operational orbit. When the desired orbit hour angle is reached, a plane change maneuver decreases the inclination to 92.64° and the orbit plane drifts at the sun synchronous rate of 0.524°/day. The ellipticity of Mars' orbit causes the indicated oscillation between 1:30 and 3:00 p.m.

The plot shows the history of the hour angle for various drift rates; fast drift times exhibit a secular hour angle increase to the desired value. Slow drift times show the periodic effect of Mars orbit ellipticity. The selection of the drift time depends on the importance of quickly reaching the 1:30 to 3:00 p.m. range, which favors a fast drift time, and the conservation of bipropellant for an extended mission, which favors a slow drift time with less plane change ΔV. The spacecraft can support science instrument sampling during the drift period, although the duty cycle must be limited until the orbit plane crosses an 8:40 a.m. hour angle.

HOUR ANGLE VARIATION

HUGHES

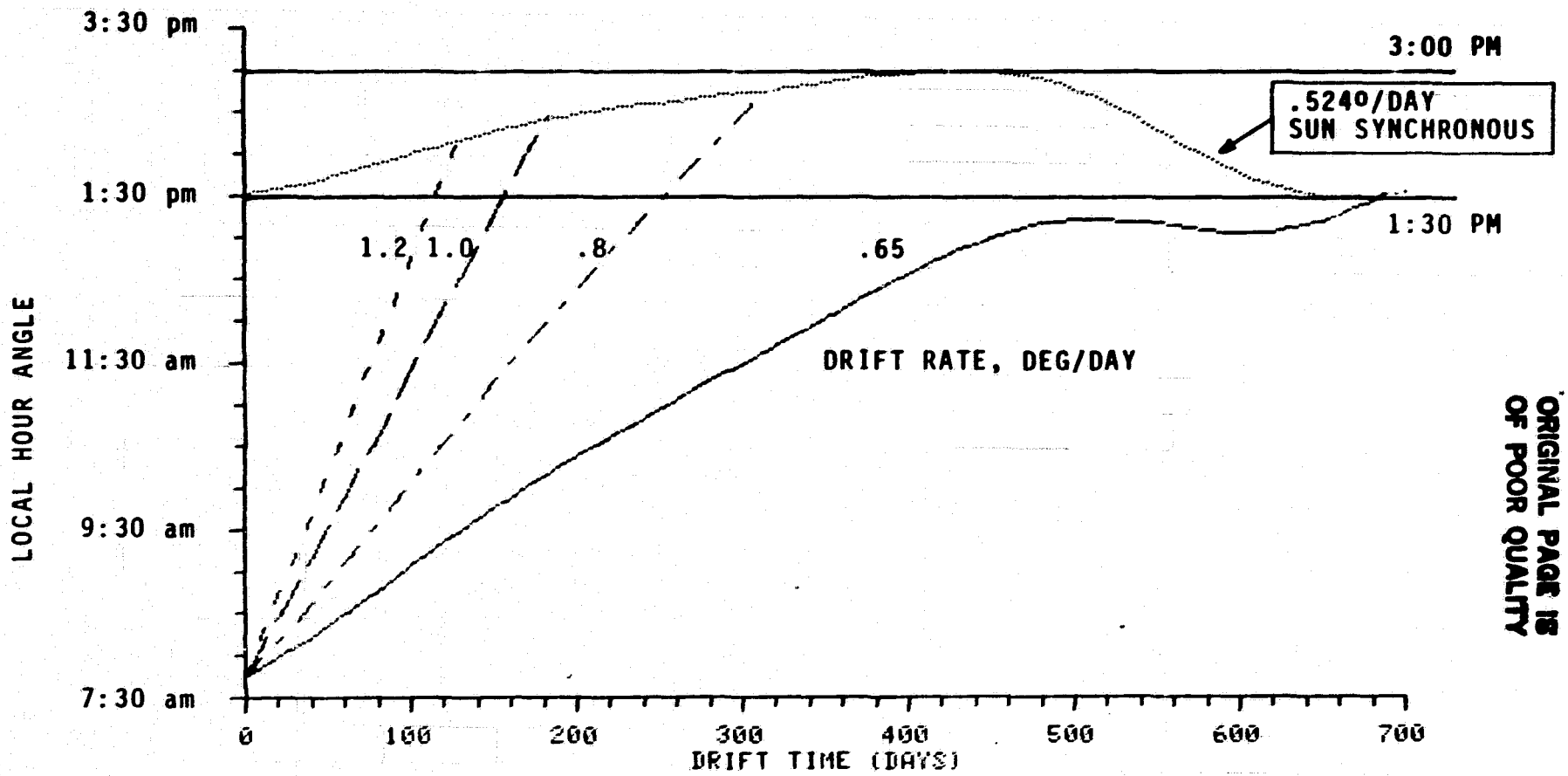

ORIGINAL PAGE IS OF POOR QUALITY

ΔV REQUIRED TO STOP DRIFT RATE

As shown in the previous plot, a plane change maneuver when the orbit drifts to the proper hour angle slows the drift to the 0.524°/day sun-synchronous rate.

Faster drift rates shorten the drift time but increase the ΔV for the plane change. The plot shows this increase in ΔV for shorter drift times.

Trajectory correction maneuvers during the transit trajectory remove launch errors. These maneuvers burn a significant portion of the liquid bipropellant and largely determine the propellant remaining for the plane change.

The two points marked on the curve correspond to 1σ and 3σ TCM magnitudes. The 3σ analysis means that for 99.7% of the time smaller errors occur and less ΔV is required for the TCMs. For 1σ TCM (probability 68%) more maneuver propellant can be allocated to the plane change to decrease drift time.

ΔV REQUIRED TO STOP DRIFT RATE

HUGHES

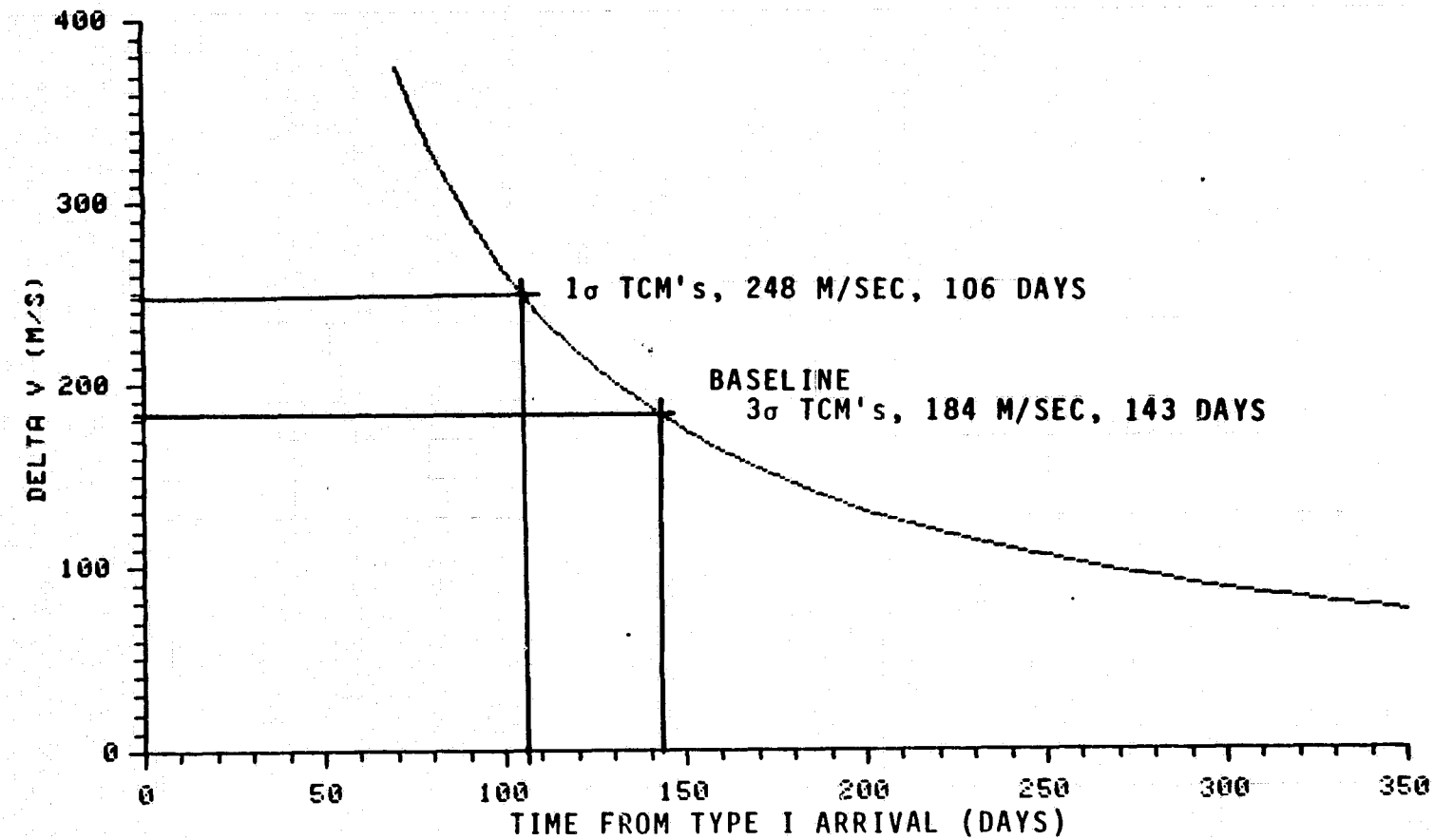

ORIGINAL PAGE IS
OF POOR QUALITY

ORBIT CONTROL STRATEGY

The baseline strategy assumes a 3σ TCM, leaving 184 m/s for the drift orbit plane change. The plot shows the corresponding nominal drift rate of 1.1295°/day.

After 129 days the orbit enters and remains in the desired hour angle range. Then, 14 days later the plane change places the spacecraft in sun synchronous orbit.

The spacecraft can operate nominally after 20 days of drift when the hour angle is later than 8:40 a.m. and can support partial instrument operation before that time.

ORBIT CONTROL STRATEGY

HUGHES

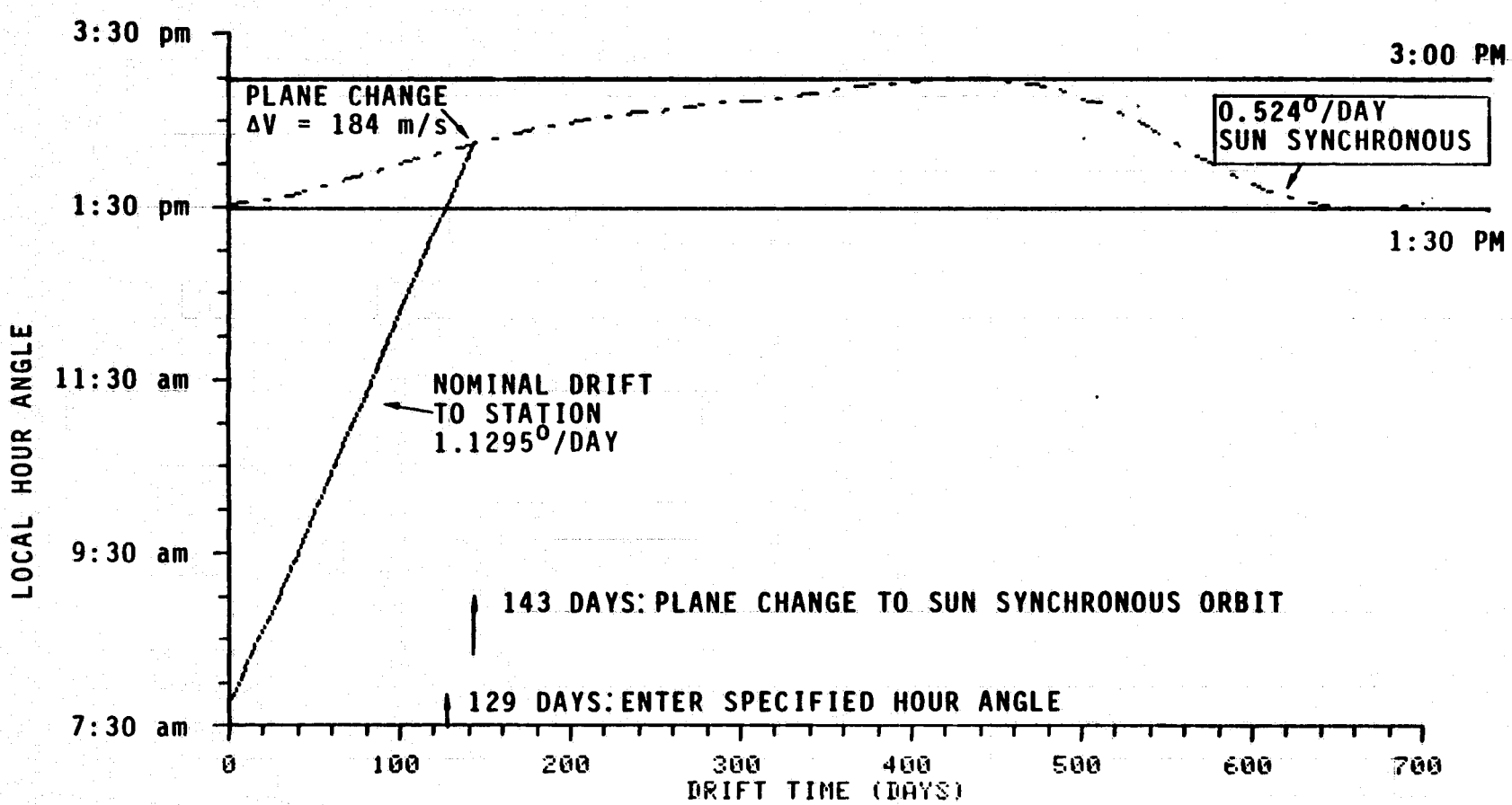

ORIGINAL PAGE IS
OF POOR QUALITY

BASELINE ORBIT CONTROL

The chart summarizes the baseline mission from orbit insertion, through drift until start of sun-synchronous operation.

The initial hour angle of 7:45 a.m. and the amount of maneuver ΔV available dictate the drift orbit strategy. The drift rate of 1.1295°/day results in a total drift time of 143 days and a plane change of 184 m/sec the to achieve final sun-synchronous drift rate of 0.524°/day.

Because Mars' orbit is elliptical, the sun-synchronous orbit hour angle varies between 1:30 p.m. and 3:00 p.m.

BASELINE ORBIT CONTROL

HUGHES

- INITIAL LOCAL HOUR ANGLE - 7:45 AM
- INITIAL DRIFT RATE 1.1295/DAY
- DRIFT TIME 143 DAYS, CROSS DESIRED HOUR ANGLE AT 129 DAYS
- PLANE CHANGE ΔV = 184 M/SEC
- FINAL DRIFT RATE = $.524^{0}$/DAY (SUN SYNCHRONOUS)
- LOCAL HOUR ANGLE BETWEEN 1:30 PM AND 3:00 PM

CLIMATOLOGY MISSION EARTH AND SUN GEOMETRY

The figures show the variation in Earth and Sun geometry during the drift and operational orbit phases. Mars' orbit ellipticity varies the distance to the sun from 1.38 to 1.67 AU. Combined with the Earth's motion about the sun, the communications range varies from 0.5 to 2.7 AU.

Eclipses of 35 to 42 minutes occur during every orbit. Comparable duration occultations also span the mission with a brief time near 840 days after orbit insertion when the occultation period is reduced while the Earth is nearly normal to the orbit plane.

The solar incidence angle, which combined with solar distance determines the solar panel power output, ranges from 45 to 68 degrees during the operational mission with a larger variation from 29 to 90 degrees during the drift orbit. Although "sun synchronous", the orbit hour angle actually varies between 1:30 and 3:00 p.m. due to Mars' orbit ellipticity.

The hour angle of the Earth varies due to the relative motion of Mars and Earth about the sun. As shown, the Earth crosses to the antisun side of the orbit plane at 500 and 1200 days after orbit insertion. The next set of figures show the Earth's position measured in antenna elevation and azimuth coordinates.

CLIMATOLOGY MISSION EARTH/SUN GEOMETRY

HUGHES

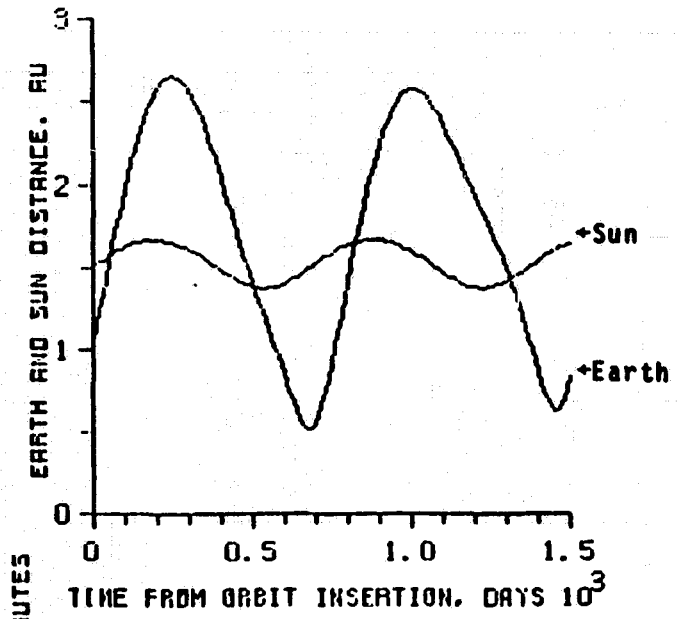

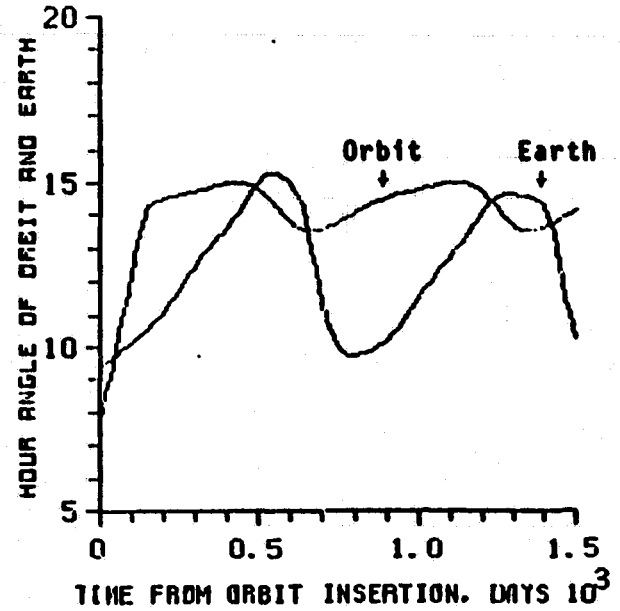

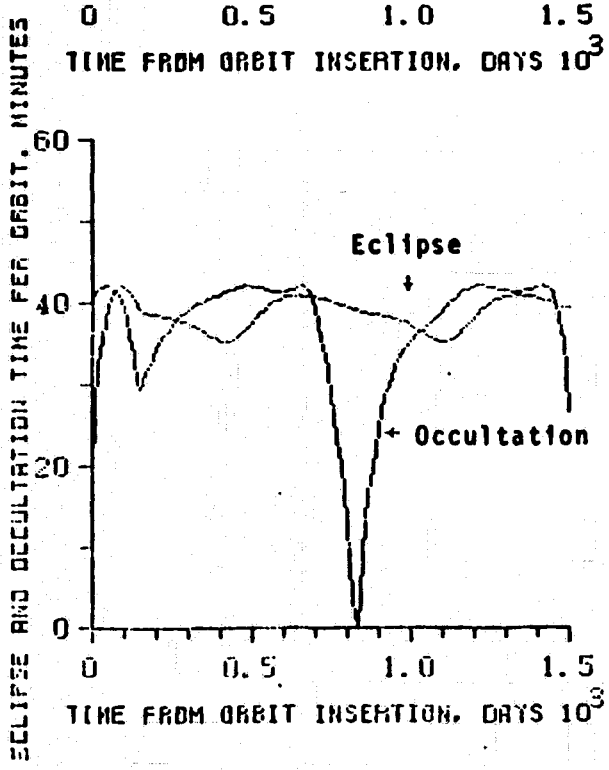

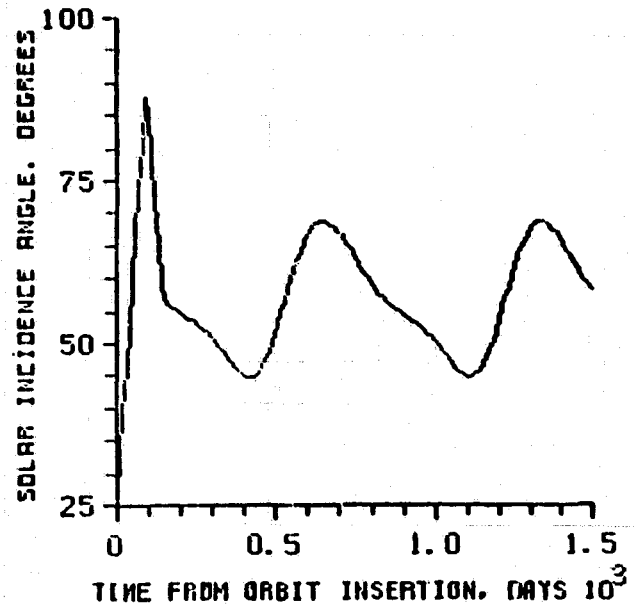

ORIGINAL PAGE IS OF POOR QUALITY

COMMUNICATIONS GEOMETRY VARIATION DURING ORBIT

During each DSN pass, the antenna tracks the earth by moving the elevation and azimuth positioners. The figures trace the required elevation and azimuth angles for the entire orbit on extreme days of the mission. The actual required pointing profile is not valid when Mars occults the spacecraft. The two elevation conditions correspond to the Earth being in and perpendicular to the orbit plane.

The insets show the antenna-centered elevation and azimuth coordinates. The platform inertial reference varies as the instruments track nadir. Elevation angle lies in a plane containing nadir, the antenna, and Earth. Azimuth lies in a plane normal to nadir.

The spacecraft body interferes with the antenna field of view for positive elevation angles as a function of pointing azimuth. At 0° azimuth (along the body) elevation angles up to +10° are not blocked. A 45° azimuth allows elevations up to +45°. This free field of view provides adequate communications coverage. Lengthening the antenna mast could increase the unimpeded elevation angle.

COMMUNICATIONS GEOMETRY VARIATION DURING ORBIT

HUGHES

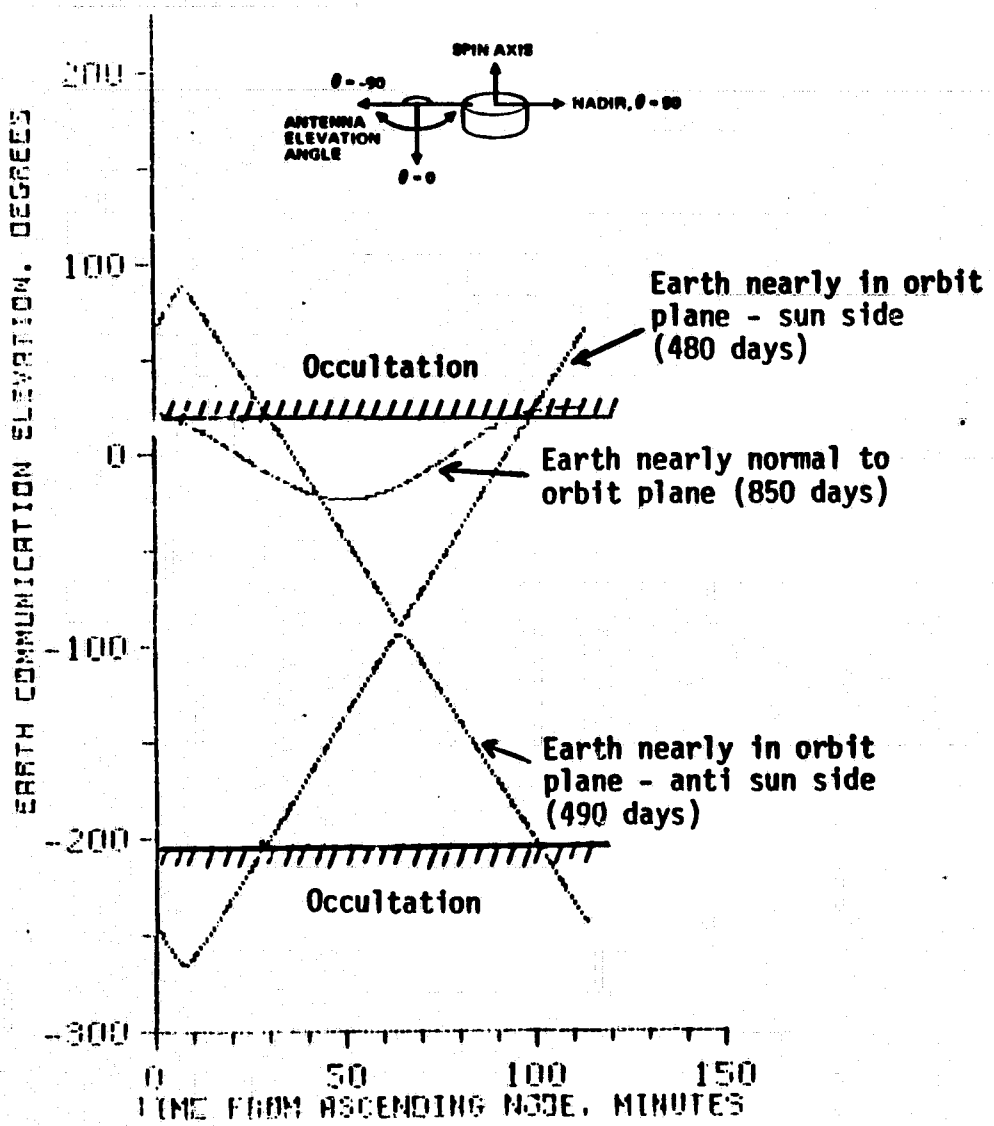

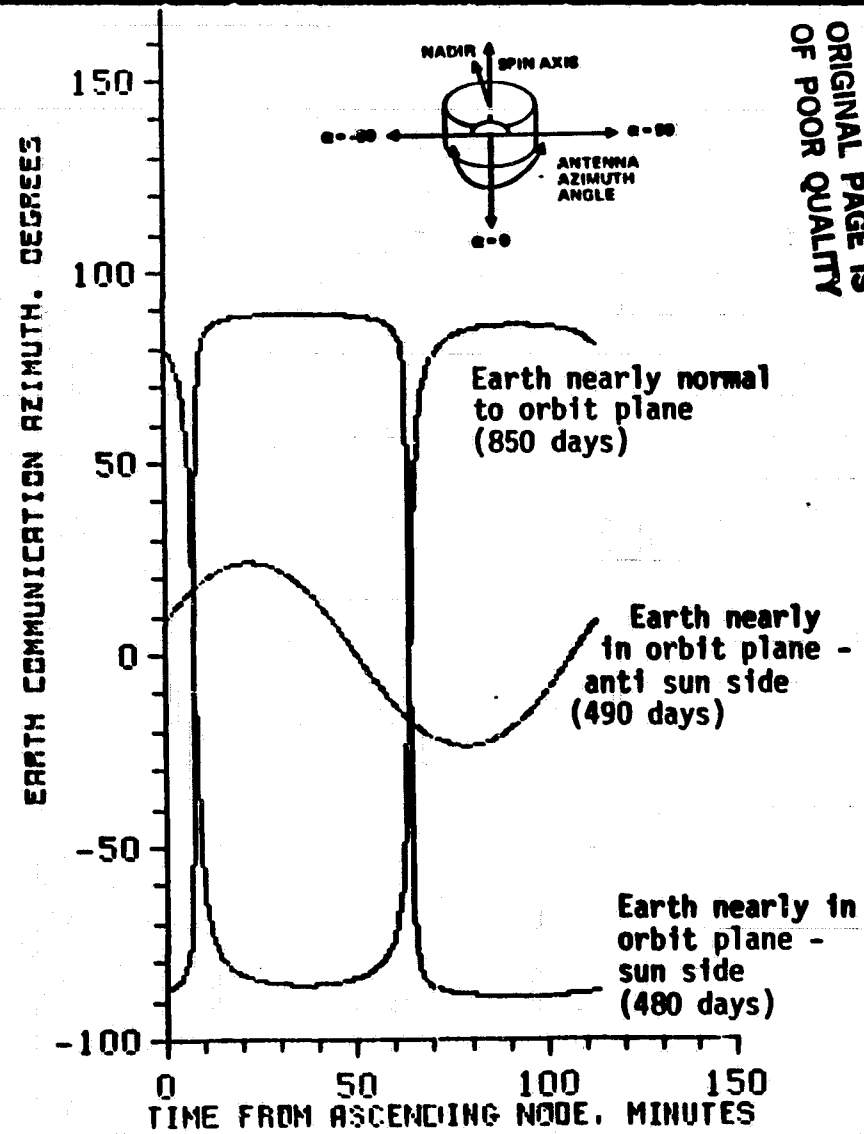

ORIGINAL PAGE IS OF POOR QUALITY

CLIMATOLOGY MISSION SEPARATED MASS

The spacecraft separated mass at launch is broken down into three components. The solid motor mass for Mars orbit insertion includes a 20% offload; the liquid bipropellant mass includes the mixture ratio reserve (ullage); and the spacecraft dry mass includes all contingency and reserve.

The adapter is not included since it separates with the integrated propulsion stage.

CLIMATOLOGY MISSION SEPARATED MASS

HUGHES
HUGHES AIRCRAFT COMPANY

	MASS, KG
DRY MASS ON ORBIT	650
LIQUID BIPROPELLANT	236
STAR 31 PROPELLANT AND BURNED INERTS	1038
SEPARATED MASS	1924

CLIMATOLOGY MISSION MANEUVER PROPELLANT

Allocation of the 231.8 kg of bipropellant available for all mission maneuvers is shown in the table. The three main divisions are the transit trajectory, Mars orbit insertion, and on-orbit. The table details the propellant needed for attitude and re-orientation maneuvers and major maneuvers within these divisions.

The 3 σ TCMs, which use 65 kg of propellant, the plane change, and the orbit trims consume most of the propellant.

Attitude control requires 14% of the total propellant capacity.

CLIMATOLOGY MISSION MANEUVER PROPELLANT

HUGHES

	ΔV, M/S	MASS, K/G
• TRANSIT TRAJECTORY		
– REORIENTATIONS		
SPINUP (30-55 RPM)	-----	1.5
BURNOUT TO INITIAL CRUISE ATTITUDE (90°)	-----	1.7
ATTITUDE CONTROL DURING CRUISE (60°)	-----	1.2
FOR FIRST TCM (360°)	-----	7.0
MOI ATTITUDE (45°)	-----	.8
– TRAJECTORY CORRECTION MANEUVERS	96.0	65.1
• MOI		
– REORIENTATIONS		
PERIAPSIS TRIM (180°)	-----	2.6
APOAPSIS TRIM (180°)	-----	2.6
IN PLANE TO ORBIT NORMAL (90°)	-----	1.2
– ORBIT CORRECTION	34.5	10.0
– RSS TARGETING ERRORS	151.3	42.3
• ON ORBIT (AFTER 20 DAYS)		
– REORIENTATIONS		
S/C FLIP AT NOON (180°)	-----	2.4
TO MAINTAIN ORBIT NORMAL (810°)	-----	10.5
CORRECT TORQUES	-----	1.8
– PLANE CHANGE	184.0	49.3
– ORBIT SUSTENANCE	26.0	6.7
– PQ	100.0	25.1
MAXIMUM PROPELLANT AVAILABLE		231.8
RESIDUAL PROPELLANT (ULLAGE)		4.5
TOTAL BIPROPELLANT CAPACITY		236.3

ORIGINAL PAGE IS OF POOR QUALITY

CLIMATOLOGY MISSION SEQUENCE

The accompanying mission sequence, from STS launch to end of mission, lists all major events and maneuvers of the climatology mission. Between launch and injection, the sequence will be similar to Intelsat VI. The launch/injection sequence will be detailed before the Mars Orbiter Phase B study and flight verified before Mars Orbiter launch by Intelsat VI.

Additional information on the maneuvers appears in the climatology mission propellant budget.

CLIMATOLOGY MISSION SEQUENCE

Time, Days	Event
L - 7	Launch by STS
L - 45 minutes	Integrated propulsion stage (IPS) and spacecraft ejected from shuttle at 2 rpm
L - 30 minutes	Spin up to 30 rpm
L	IPS fired and separated from spacecraft
L + .5	Omni/bicone antenna mast deployed, reorient spacecraft to initial cruise attitude, despin platform, and spin up to 55 rpm
L + .5 to MOI	Precise attitude determination by star tracker, science instrument checkout as desired
L + 10	Reorient spacecraft for first trajectory correction maneuver (TCM), perform TCM, reorient to cruise attitude
L + 75	Second TCM (vector mode)
MOI - 20	Third TCM (vector mode)
MOI - 5	Reorient to MOI attitude
MOI	Mars orbit insertion
MOI to MOI + .5	Capture orbit determination
MOI + .5	Reorient spacecraft and perform periapsis trim
MOI + 1	Reorient spacecraft and perform apoapsis trim and change orbit plane to drift inclination
	Reorient to operational attitude
	Deploy high gain antenna, GRS boom, and solar panel
MOI + 1 to MOI + 143	Drift to sun-synchronous orbit
MOI + 20	Power available for full science instrument operation
MOI + 98	Flip spacecraft at noon orbit
MOI + 129	1:30 hour angle constraint satisfied
MOI + 143	Orbit plane change to sun-synchronous inclination
MOI + 143 to MOI + 830	Nominal mission
MOI + 830 to MOI + 1517	Extended mission
EOM	Planetary quarantine maneuver

ORIGINAL PAGE IS
OF POOR QUALITY

PRECEDING PAGE BLANK NOT FILMED

2.3 AERONOMY MISSION

AERONOMY MISSION ANALYSIS AND ORBIT SELECTION

The following section describes the aeronomy mission analysis emphasizing the implications of the ARC baseline orbit at Mars. The transit trajectory selected for this analysis assumes launch on the first day of the Hughes-recommended launch window.

AERONOMY MISSION ANALYSIS AND ORBIT SELECTION

HUGHES
HUGHES AIRCRAFT COMPANY

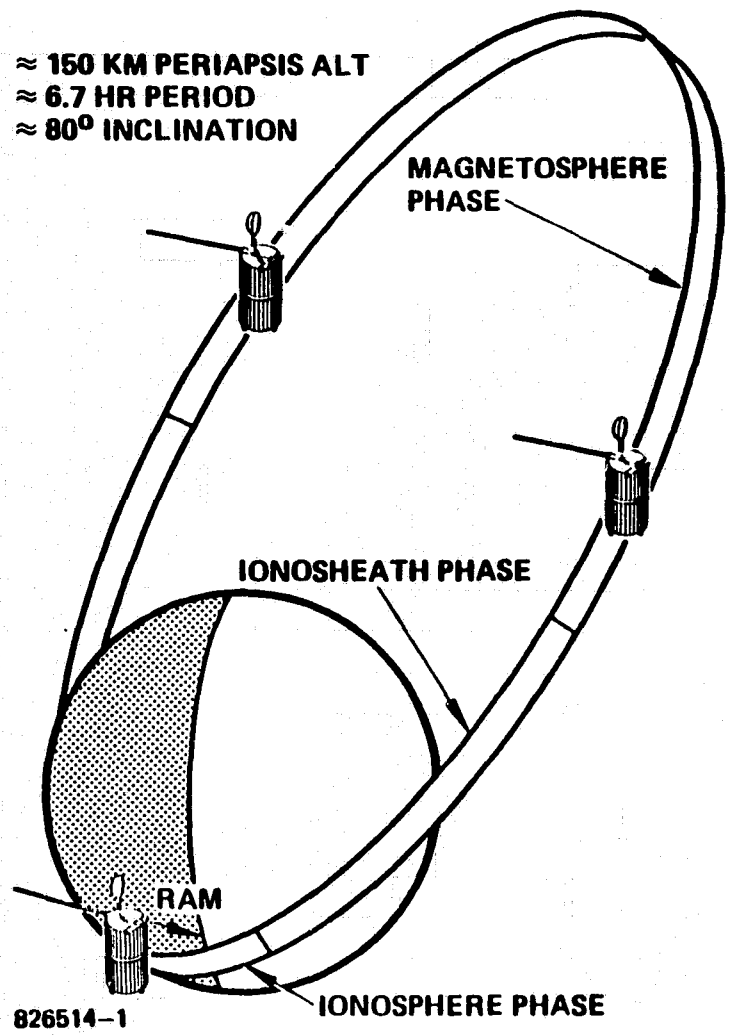

- BASELINE ORBIT DESCRIPTION
- EFFECTS OF PERIAPSIS ALTITUDE VARIATION
- IMPLICATIONS OF BASELINE

ORIGINAL PAGE IS OF POOR QUALITY

BASELINE AERONOMY MISSION

The table lists key parameters of the 1988 aeronomy mission. A due-east Shuttle launch carries the spacecraft and integrated propulsion stage (IPS) into a 296 km parking orbit where the IPS injects the spacecraft with a C_3 of 11.64 km^2/s^2. The STAR-30B MOI motor captures the spacecraft into a 150 x 10192 km (3 R_M) altitude orbit around Mars. The apsidal and nodal rates provide the desired coverage of altitudes, latitudes, and sun angles.

BASELINE AERONOMY MISSION (1ST DAY OF WINDOW)

HUGHES
HUGHES AIRCRAFT COMPANY

TRANSIT PARAMETERS

LAUNCH DATE	JUNE 29, 1988
ARRIVAL DATE	JAN 10, 1989
LAUNCH C3	11.64 KM^2/SEC^2
DECLINATION OF LAUNCH ASYMPTOTE	14.55^0
V_∞ MAGNITUDE	2.79 KM/SEC
ARRIVAL DECLINATION	3.70^0

MARS ORBIT PARAMETERS (ARC BASELINE)

PERIAPSIS ALTITUDE	150KM
APOAPSIS ALTITUDE	10192KM (3RM)
ORBIT INCLINATION	77.5^0
APSIDAL PRECESSION RATE	$-.532^0$/DAY
NODAL PRECESSION RATE	$-.300^0$/DAY
INITIAL PERIAPSIS LATITUDE	-49^0 (SOUTH INSERTION)

ORIGINAL PAGE IS OF POOR QUALITY

ECLIPSE AND OCCULTATION HISTORY

In addition to moving periapsis near the subsolar and anti-solar points, the baseline orbit places the spacecraft at a wide range of altitudes over the solar wake, as shown in the lower graphs. The upper plots show that the eclipse and occultation times for this orbit remain below 90 and 70 minutes, respectively. Long eclipse times correspond to high altitudes during eclipse because the spacecraft moves slowly near apoapsis. Most of the mission has shorter or no eclipses, resulting in lighter use of the batteries.

ECLIPSE AND OCCULTATION HISTORY

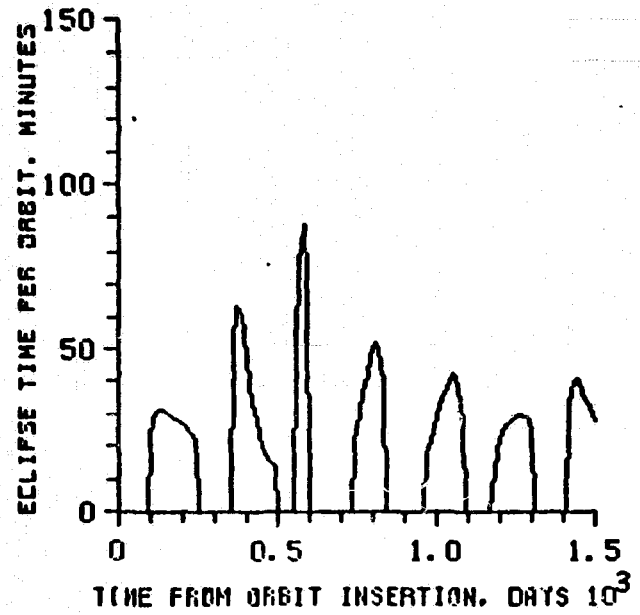

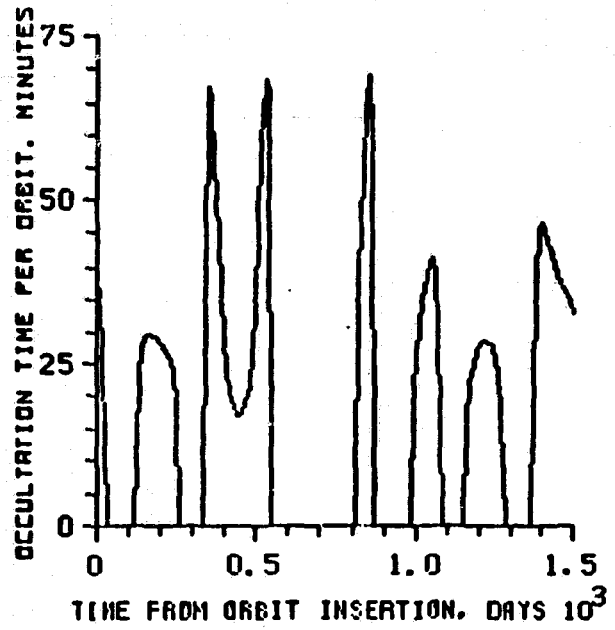

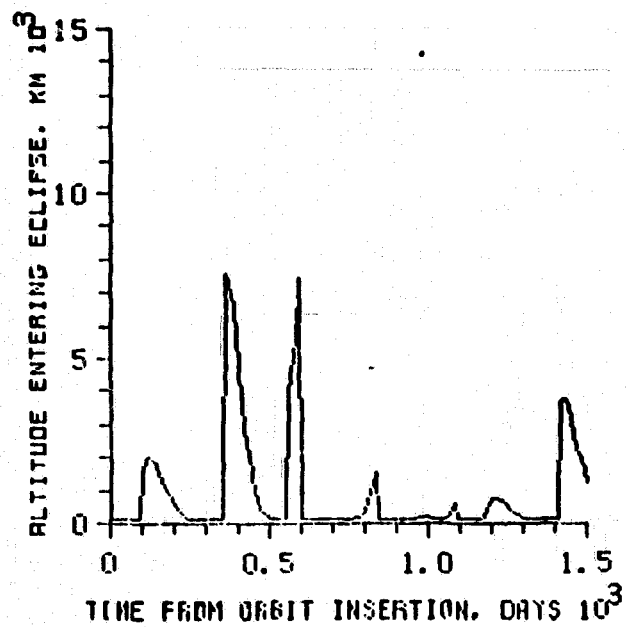

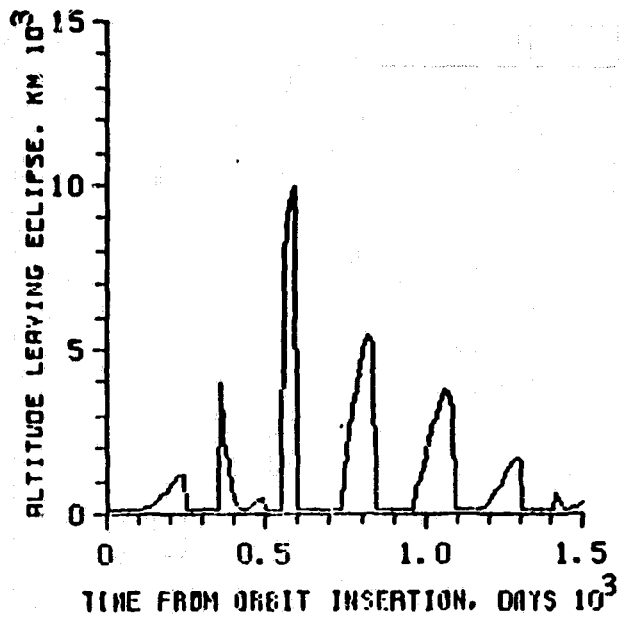

ORIGINAL PAGE IS
OF POOR QUALITY

COMMUNICATIONS ANTENNA AND RAM-SCIENCE POINTING GEOMETRY

The graphs show the antenna and ram-oriented science pointing geometry. Elevation angles are measured from the spacecraft equipment shelf. As periapsis reaches minimum or maximum latitude the ram elevation angles reach zero degrees. Inverting the spacecraft keeps ram elevation positive. Ram azimuth is measured from the intersection of the Mars Orbit plane and the spacecraft orbit plane. The antenna azimuth angle is measured relative to the ram azimuth. These coordinates make the indicated ram angles correspond to positioner elevation and despun platform azimuth and make the earth pointing angles correspond to antenna positioner elevation and azimuth. The antenna azimuth is limited to about 360° of travel by the connecting cables; unwinding the accumulated rotation during occultation avoids the use of a rotary joint without loss of transmission time.

COMMUNICATIONS ANTENNA AND RAM SCIENCE POINTING GEOMETRY

• = SPACECRAFT PRECESSED 180°

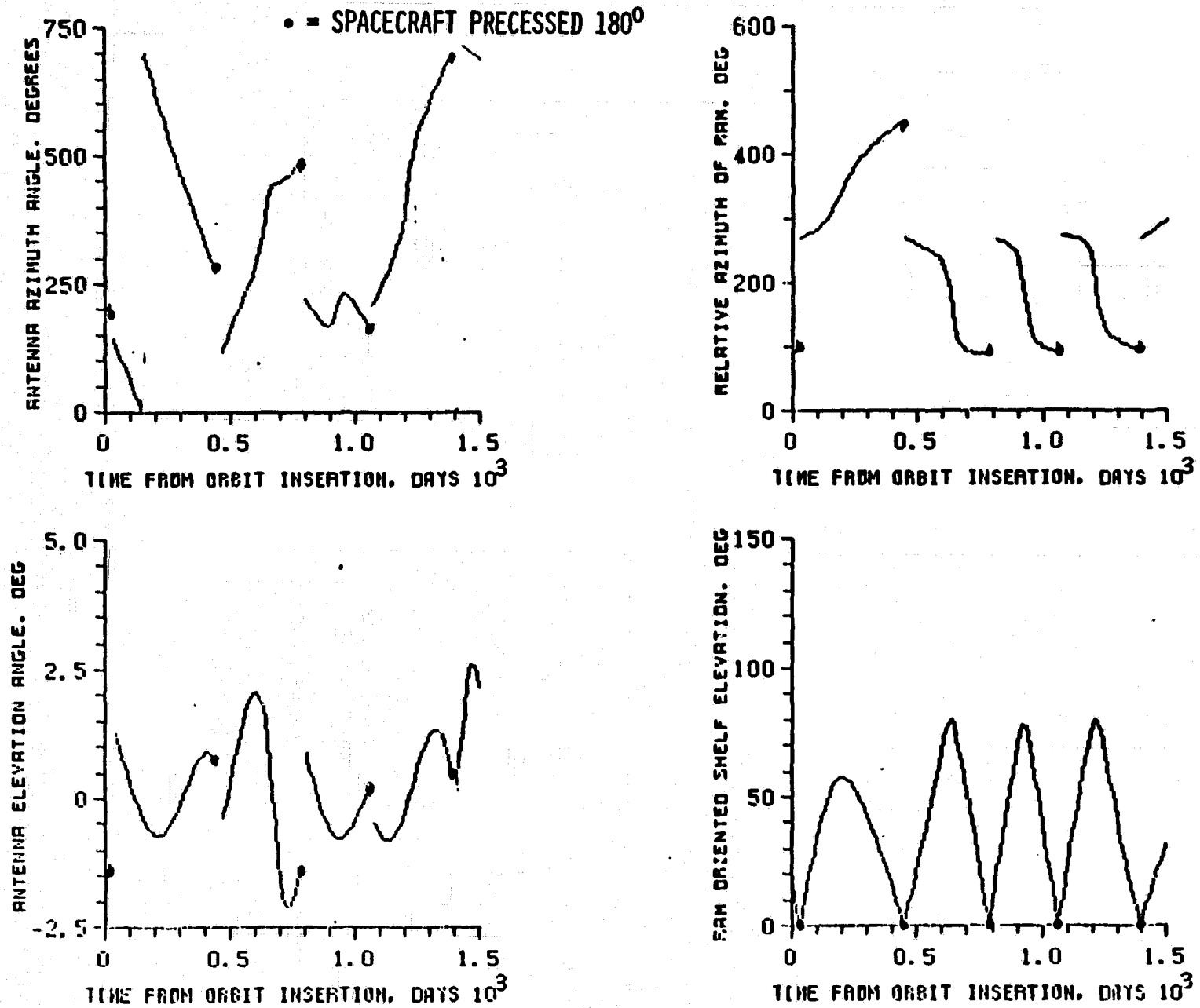

ORIGINAL PAGE IS OF POOR QUALITY

SUBSOLAR AND ANTISOLAR SCIENCE MAPPING

Sun relative latitude and longitude histories show how close periapsis comes to subsolar and antisolar locations. For the ARC baseline orbit, periapsis comes within 20° of both points during the first Mars year. The second year behavior does not repeat the pattern of the first year. Adjusting inclination can provide somewhat closer passes if desired.

SUBSOLAR AND ANTISOLAR SCIENCE MAPPING

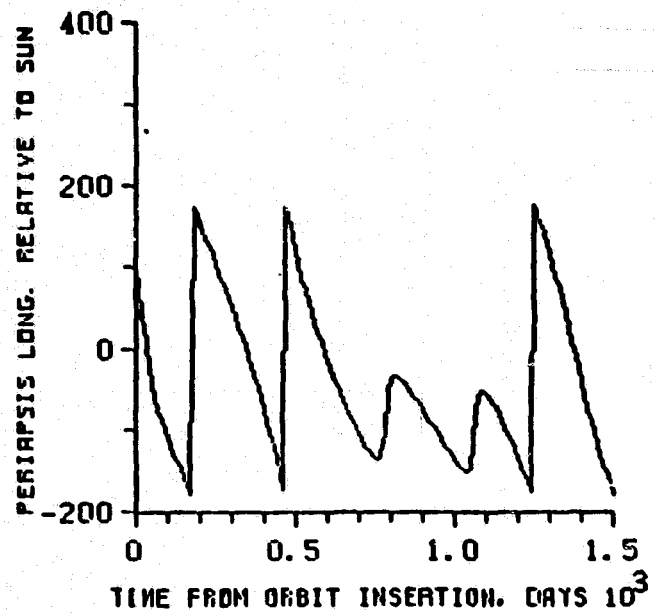

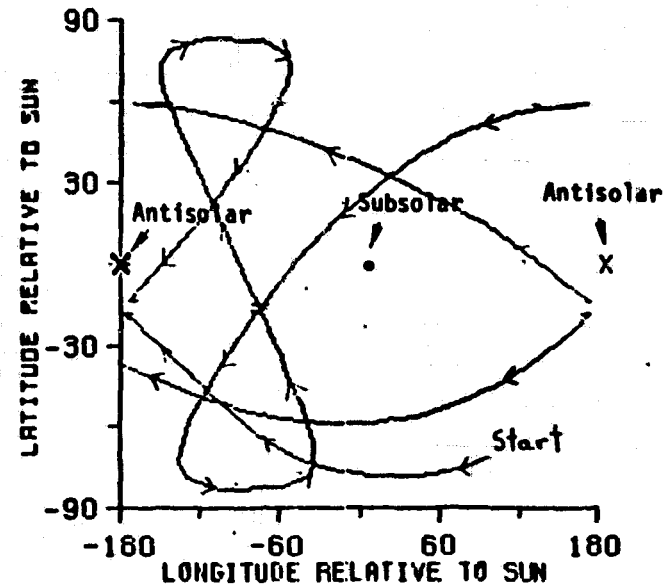

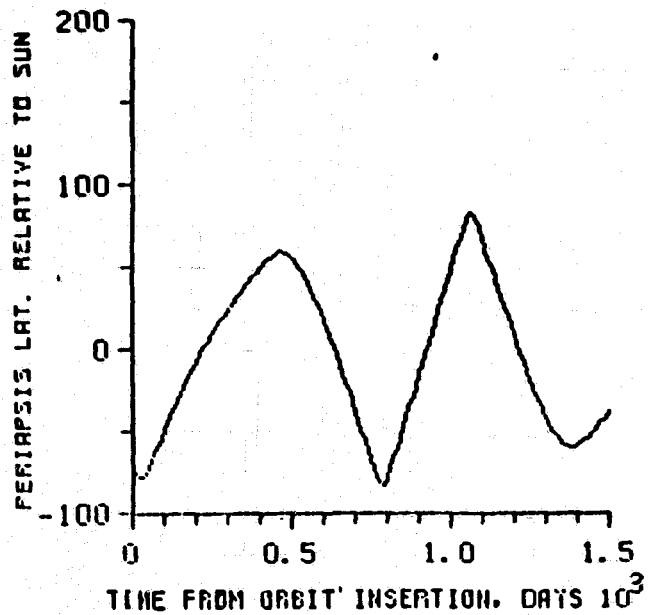

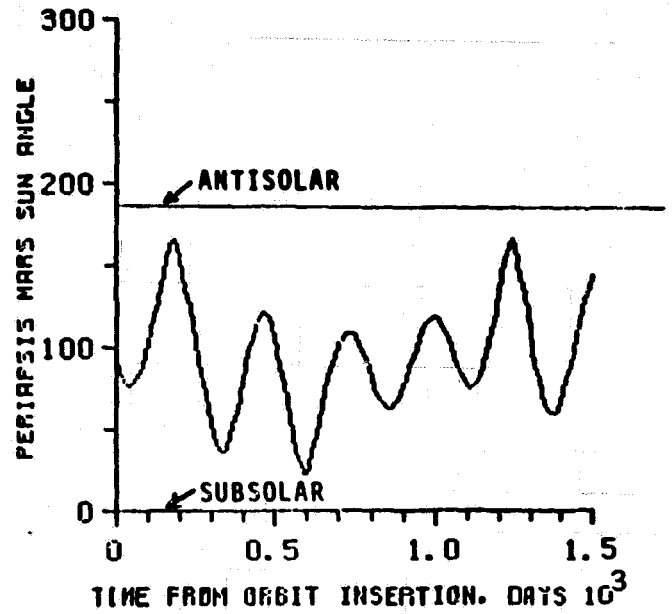

ORIGINAL PAGE IS
OF POOR QUALITY

EFFECT OF PERIAPSIS ALTITUDE ON NODAL AND PERIAPSIS PRECESSION

Keeping periapsis at a fixed atmosphere density implies that periapsis altitude will differ from the nominal 150 km, with the variation being undetermined until arrival at Mars. A variation in periapsis altitude will change the precession of periapsis around the planet from the nominal, affecting where it passes the solar and anti-solar points.

EFFECT OF PERIAPSIS ALTITUDE ON NODAL AND PERIAPSIS PRECESSION

HUGHES
HUGHES AIRCRAFT COMPANY

- FORCING PERIAPSIS ALTITUDE TO DESIRED ATMOSPHERE DENSITY RESULTS IN DIFFERENT PERIAPSIS AND NODAL PRECESSION RATES.
- DIFFERENT PRECESSION RATES AFFECT SOLAR AND ANTI-SOLAR TARGETING.

ORIGINAL PAGE IS
OF POOR QUALITY

SENSITIVITY OF ORBIT POSITION AFTER ONE MARS YEAR TO PERIAPSIS ALTITUDE

The orbit line of nodes and line of apsides precess during the Mars year due to the planet's oblateness. A previous figure shows the time history of this motion for 150 km periapsis altitude, demonstrating near subsolar and antisolar mapping once during the first Mars year. The orbit motion changes for a different value of periapsis altitude which may be selected to match the desired density profile. The figure demonstrates the variation in orbit motion that results for periapsis altitude away from 150 km.

Shown is the change in the angle of the line of nodes and line of apsides after one Mars year as a function of periapsis altitude and orbit inclination. For example, at the baseline 77.5° orbit inclination, the line of apsides will move 0.2° after one Mars year for every kilometer change in periapsis altitude and the line of nodes will move 0.1°. The effect of larger altitude change is found from simple multiplication since the partial derivatives vary little with altitude. Therefore, a 30 km periapsis altitude change (new periapsis altitude 120 or 180 km) shifts the line of apsides 6° and the line of nodes 3°. The offset at the critical subsolar and antisolar points depends on the fraction of the Mars year that has passed before crossing the points. The motion may even reduce the subsolar and/or antisolar offset depending on the specific mission geometry.

Varying periapsis altitude over ±30 km to achieve desired sampling density has only a minor impact on science mapping.

SENSITIVITY OF ORBIT POSITION AFTER ONE MARS YEAR TO PERIAPSIS ALTITUDE

HUGHES

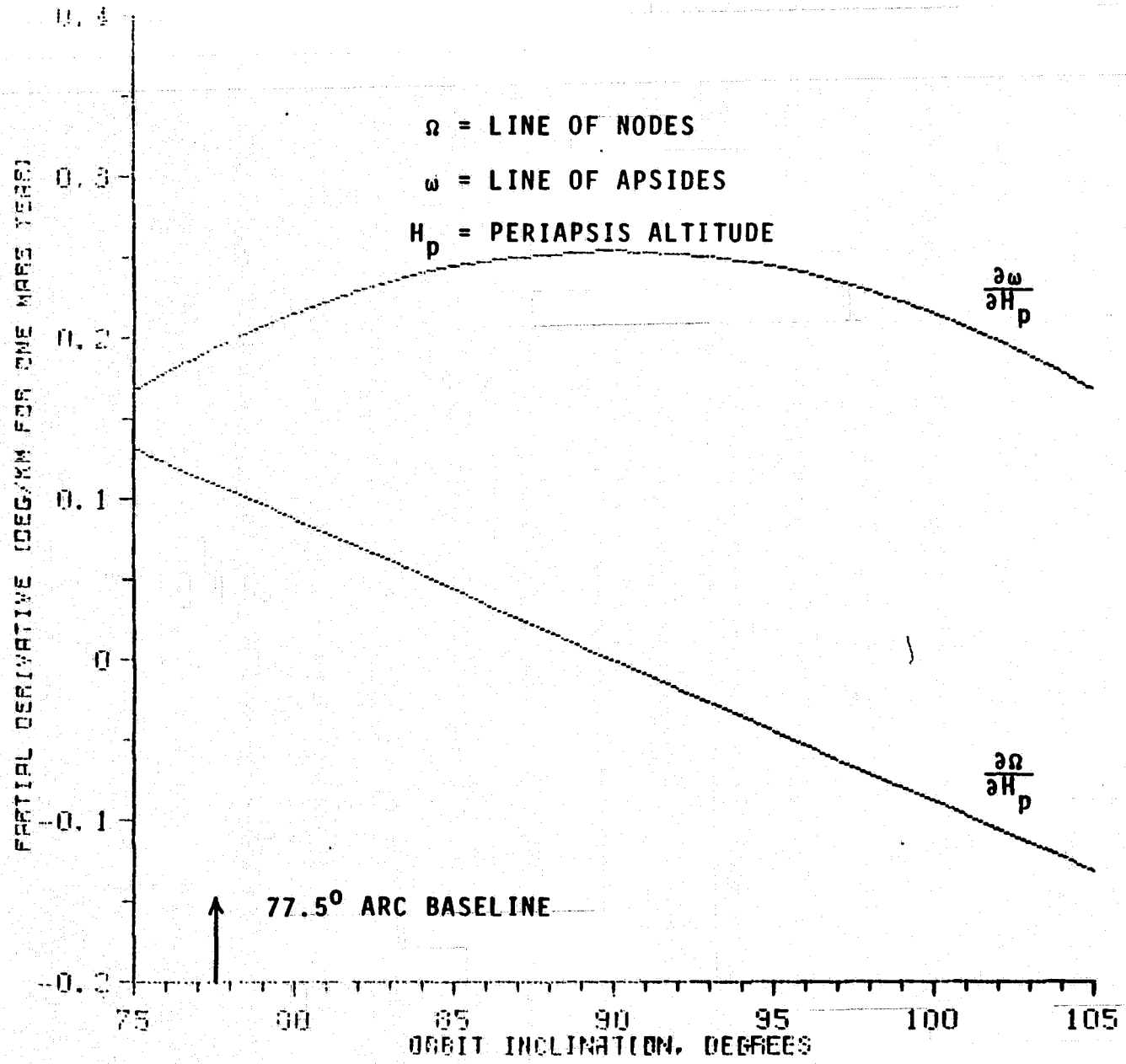

ORIGINAL PAGE IS OF POOR QUALITY

CAPTURE ORBIT CORRECTION

B-plane analysis indicates 3σ insertion errors of 2.1° in inclination and 215 km in altitude. Therefore, the orbit insertion strategy targets periapsis altitude at 365 km (215 + 150 km) and burns the STAR-30B MOI motor to nominally capture into an orbit with an apoapsis of $3R_M$. A 26.8 m/s apoapsis burn lowers periapsis from 365 to 150 km for a nominal capture. The allocated targeting error is the RSS of the individual error sources. The total correction of 109.4 m/s adds the ΔV for the nominal correction and the targeting error trims.

CAPTURE ORBIT CORRECTION

HUGHES
HUGHES AIRCRAFT COMPANY

- ERROR SOURCES

  2.1° ERROR IN ORBIT PLANE INCLINATION
  215 KM ERROR IN INSERTION ALTITUDE
  .63% MOTOR PERFORMANCE UNCERTAINTY

- ΔV FOR NOMINAL TRAJECTORY

	ΔV M/S
APOAPSIS	26.8
PERIAPSIS	0.0

- RSS ΔV TO COMPENSATE FOR TARGETING ERRORS

APOAPSIS	47.8
PERIAPSIS	34.8
TOTAL	109.4

ORIGINAL PAGE IS OF POOR QUALITY

AERONOMY MISSION SEPARATED MASS

The aeronomy mission analysis assumes 600 kg spacecraft dry mass and 236 kg loaded bipropellant. The aeronomy orbiter retains the HS-376 STAR-30B, which burns 508 kg of expendables. The 60 kg adapter separates with the IPS after injection.

AERONOMY MISSION SEPARATED MASS

HUGHES
HUGHES AIRCRAFT COMPANY

	MASS, KG
DRY MASS ON ORBIT	600
LIQUID BIPROPELLANT	236
STAR 30B PROPELLANT AND BURNED INERTS	508
SEPARATED MASS	1344 KG

AERONOMY MISSION MANEUVER PROPELLANT

The budget allocates the 231.8 kg of available bipropellant in the three mission phases: transit, MOI, and on-orbit. The mission uses 183.6 kg of bipropellant, leaving 48.2 kg for reserve and 4.5 kg for ullage.

The TCMs and MOI targeting error corrections use 40% of the budgeted propellant. However, the 44.5 kg and 22.7 kg, respectively, allocated for these maneuvers represents a 3σ value; typical maneuvers will leave a greater reserve.

AERONOMY MISSION MANEUVER PROPELLANT

HUGHES
HUGHES AIRCRAFT COMPANY

		Δ V, M/S	MASS, KG
• TRANSIT TRAJECTORY			
- REORIENTATIONS	SPIN UP (30-55 RPM)	---	1.5
	BURNOUT TO INITIAL CRUISE ATTITUDE (90°)	---	1.8
	ATTITUDE CONTROL DURING CRUISE		1.2
	FOR FIRST TCM (360°)	---	7.0
	MOI ATTITUDE (45°)	---	0.8
- TCM		96.0	44.5
• MOI			
- REORIENTATIONS	PERIAPSIS TRIM	---	3.1
	APOAPSIS TRIM	---	3.1
	PLANE CHANGE	---	1.5
	OPERATIONAL ATTITUDE	---	1.5
- ORBIT CORRECTION		26.8	7.3
- RSS TARGETING ERRORS		82.6	22.7
• ON ORBIT			
- REORIENTATIONS	ATTITUDE CONTROL	---	14.1
	5 S/C FLIPS	---	15.0
- ORBIT SUSTENANCE	(63.2 M/SEC PER MARS YEAR)	126.4	33.3
- PLANETARY QUARANTINE		100.0	25.2
PROPELLANT RESERVE		195.6	48.2
ULLAGE			4.5
TOTAL BIPROPELLANT CAPACITY			236.3

ORIGINAL PAGE IS OF POOR QUALITY

AERONOMY MISSION SEQUENCE

The accompanying mission sequence, from STS launch to end of mission, lists all major events and maneuvers of the aeronomy mission. Between launch and injection, the sequence will be similar to Intelsat VI. The launch/injection sequence will be detailed before the Mars Orbiter Phase B study and flight verified before Mars Orbiter launch by Intelsat VI.

Additional information on the maneuvers appears in the aeronomy mission propellant budget.

AERONOMY MISSION SEQUENCE

Time, Days	Event
L-7	Launch by STS
L - 45 minutes	Integrated propulsion stage (IPS) and spacecraft ejected from shuttle at 2 rpm
L - 30 minutes	Spin up to 30 rpm
L	IPS fired and separated from spacecraft
L + 5	Omni/bicone antenna mast deployed, reorient spacecraft to initial cruise attitude, and spin up to 55 rpm
L + 5 to MOI	Precise attitude determination by star scanner science instrument checkout as desired
L + 10	Reorient spacecraft for first trajectory correction maneuver (TCM), perform TCM, reorient to cruise attitude
L + 75	Second TCM (vector mode)
MOI - 20	Third TCM (vector mode)
MOI - 5	Reorient to MOI attitude
MOI	Mars orbit insertion
MOI to MOI + .5	Capture orbit determination
MOI + .5	Reorient spacecraft and perform periapsis trim
MOI + 1	Reorient spacecraft, perform apoapsis trim, and change orbit plane to correct inclination
	Reorient to operational attitude
	Despin platform
	Deploy high gain antenna, magnetometer boom, and solar panel
MOI + 20	Spacecraft flipped
MOI + 180	Closest approach to antisolar
MOI + 450	Spacecraft flipped
MOI + 600	Closest approach to subsolar
MOI + 687	End of nominal mission
MOI + 790, +1050, + 1400	Spacecraft flipped
MOI + 1374	End of extended mission
EOM	Planetary quarantine maneuver

ORIGINAL PAGE IS
OF POOR QUALITY

3. INSTRUMENT ACCOMMODATION

SCIENCE INSTRUMENT ACCOMMODATION

The following section examines the mechanical integration, electrical integration, and data handling of the baseline instrument payloads and the alternative climatology payloads. Shelf configurations reflect field-of-view requirements. Electrical interfaces provide the necessary instrument power, telemetry, and command needs. A data handling sequence accommodates all payloads for normal operation with additional capability to tolerate DSN outage.

SCIENCE INSTRUMENT ACCOMMODATION

HUGHES

EXAMINE CLIMATOLOGY BASELINE & OPTIONAL PAYLOADS, AND AERONOMY PAYLOAD IN AREAS OF:

- MECHANICAL INTEGRATION
- ELECTRICAL INTERFACES
- DATA HANDLING/OPERATIONS

ORIGINAL PAGE IS OF POOR QUALITY

PRECEDING PAGE BLANK NOT FILMED

3.1 CLIMATOLOGY MISSION

INSTRUMENT MECHANICAL REQUIREMENTS - CLIMATOLOGY

The baseline climatology payload consists of a pressure modulated radiometer (PMR), a frost infrared spectrometer (FIS), and a gamma ray spectrometer (GRS).

The table lists the physical requirements of the three instruments. The spacecraft must point the instruments to 1° in control with a 0.2° knowledge. Specified rate errors are 0.3°/12 sec in control and 0.06° in knowledge. Our spacecraft attitude control subsystem meets these requirements as described later.

INSTRUMENT MECHANICAL REQUIREMENTS - CLIMATOLOGY

HUGHES

INSTRUMENT	MASS, KG	DIMENSIONS, CM	INSTRUMENT ORIENTATION
PMR	18	35x30x20	NADIR
FIS	5	20x30x15	NADIR
GRS	14*	30x30x40	NADIR
TOTAL	37		

*BOOM MASS NOT INCLUDED

ORIGINAL PAGE IS OF POOR QUALITY

SPIN AXIS ORIENTATION - CLIMATOLOGY

Orienting the spin axis normal to Mars' orbit plane allows the instruments to track nadir. Spacecraft orientation completely shades the FIS and PMR with the solar drum. The GRS supports its own sun shade.

SPIN AXIS ORIENTATION – CLIMATOLOGY

HUGHES

- SPIN AXIS $\perp$ ORBIT PLANE PROVIDES NADIR TRACKING
- SPACECRAFT ORIENTATION PROVIDES SURFACE FOR PASSIVE RADIATORS

INSTRUMENT LAYOUT - CLIMATOLOGY

The instruments mount on a shelf located on top of the despun platform. This platform rotates at 1 revolution per orbit, aiming the instruments at nadir and providing the required fields of view. Ground commands can rotate the despun platform to point at any desired angle (in the orbit plane) with respect to nadir.

Since the GRS sensor is not calibrated, its single segment boom deploys after Mars orbit insertion and cannot be retracted.

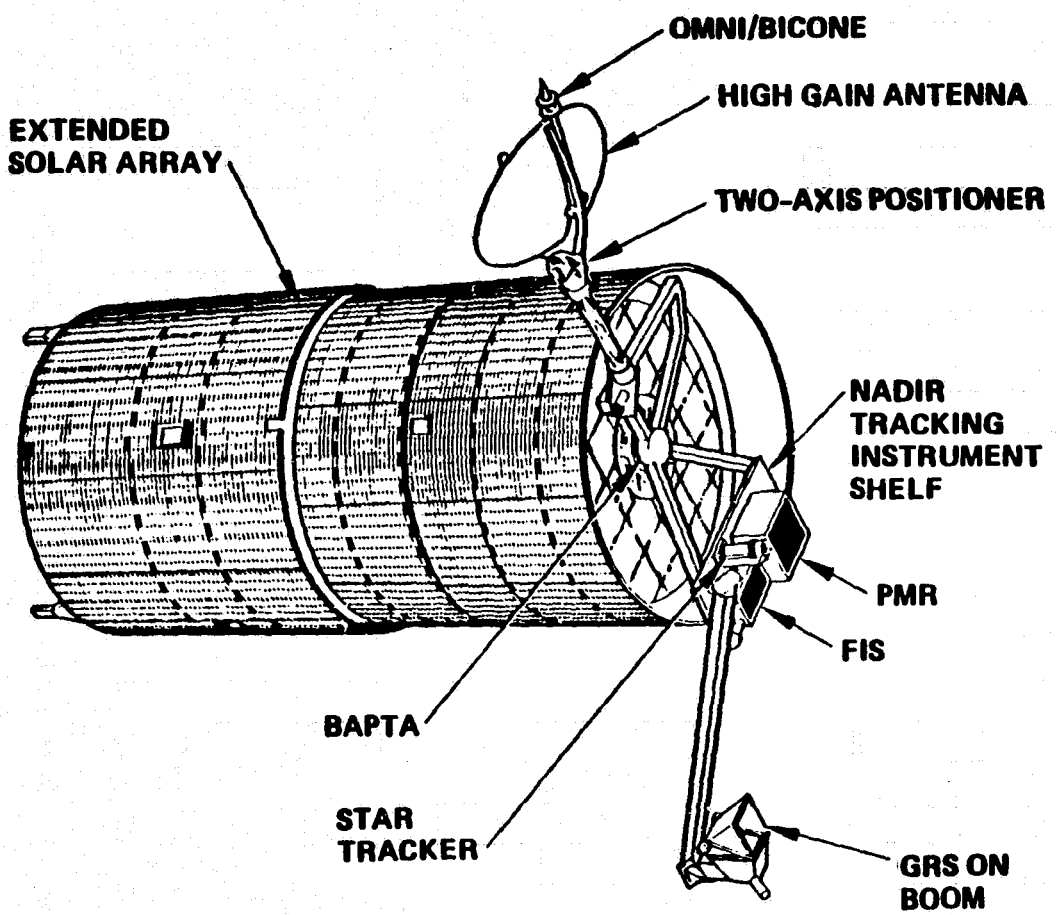

HUGHES

NADIR TRACKING INSTRUMENTS AND HGA MOUNT ON HS 376 DESPUN STRUCTURE

ORIGINAL PAGE IS OF POOR QUALITY

826514–22

PRECEDING PAGE BLANK NOT FILMED

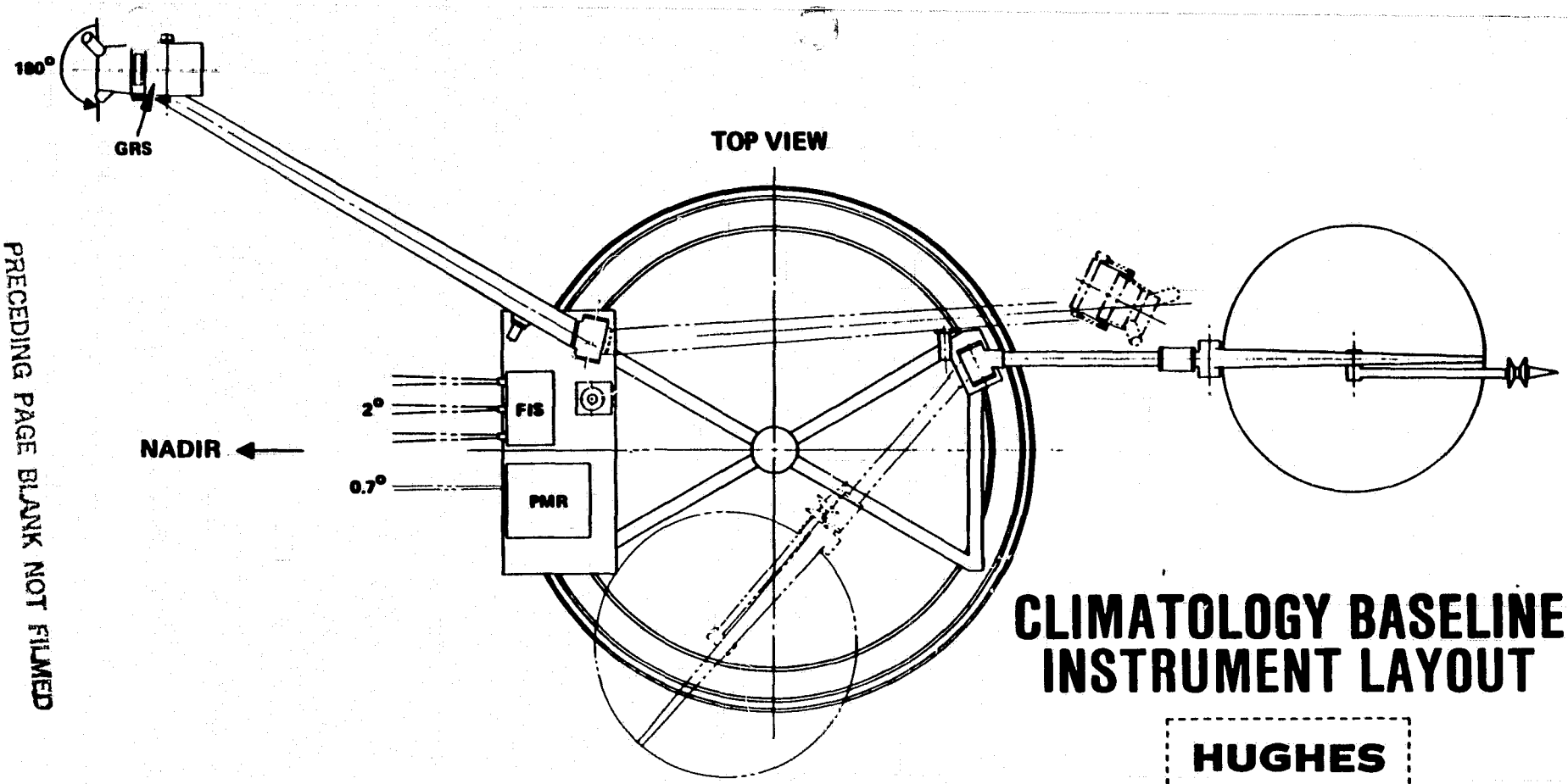

CLIMATOLOGY BASELINE INSTRUMENT LAYOUT

HUGHES

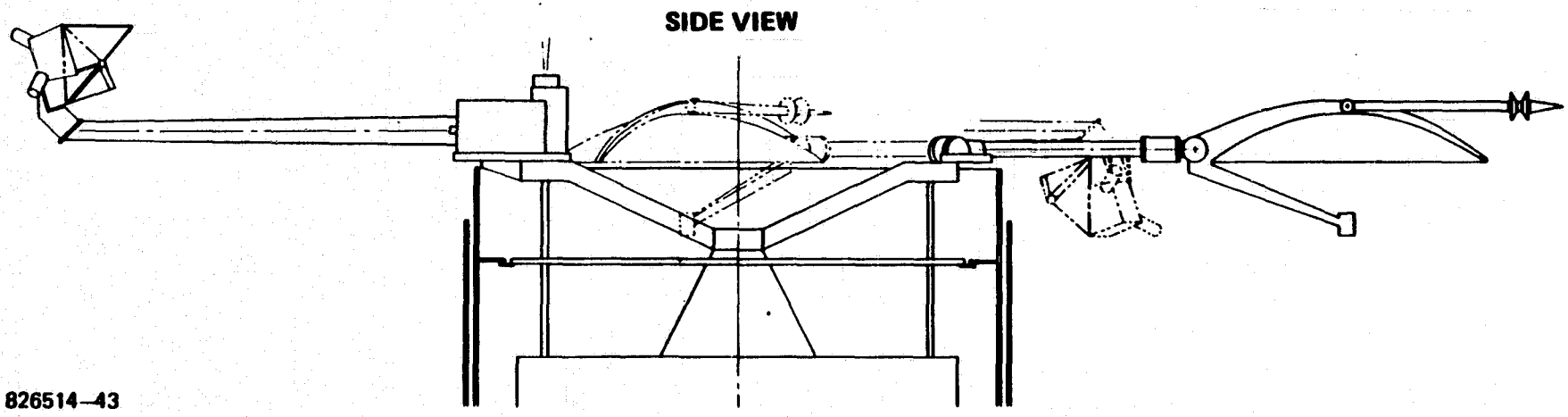

ORIGINAL PAGE IS OF POOR QUALITY

826514–43

ELECTRICAL REQUIREMENTS - CLIMATOLOGY

The table summarizes the instrument electrical requirements. The total 59 W of power does not include an extra 5 W required for GRS sensor annealing. This annealing process occurs once during cruise and only a few times as necessary on-orbit.

The data rate fluctuates between 1164 bps at night when the FIS is not sampling, to 1284 bps during the day when all instruments are collecting data.

ELECTRICAL REQUIREMENTS - CLIMATOLOGY

HUGHES

INSTRUMENT	POWER W	MAXIMUM DATA RATE, BPS	TELEMETRY INTERFACE ANALOG/ DIGITAL	SERIAL COMMAND	PULSE COMMANDS	BILEVEL STATUS	CLOCK RATE HI/LO
PMR	35	140	0/1	1	4	2	1/1
FIS	4	120	1/1	1	2	2	0/1
GRS	20	1024	1/1	1	2	3	1/1
TOTAL	59	1284	2/3	3	8	7	2/3

ACCOMMODATION OF ELECTRICAL INTERFACE REQUIREMENTS -- CLIMATOLOGY

The spacecraft meets all instrument electrical requirements. No contingency is budgeted above the specified maximum instrument.

During the 24 hour period between initiation of DSN passes, one tape recorder stores up to 105.8 Mbits of science information. Each 148.6 Mbit Odetics recorder can hold more than 32 hours of data, enough to tolerate a DSN outage.

Mars occults the spacecraft for about 40 minutes out of its 1.9 hour period. Assuming 10 minutes per orbit for acquisition and margin, the 8 hour communication window reduces to a minimum 4.2 hours. However, the science telemetry rate of 8032 bps plays back an entire tape recorder in 3.7 hours. The spacecraft sequentially transmits the data bits in each 16 kbit stored data block. The blocks are not sequential but a counter allows easy sequential reconstruction on the ground.

The spacecraft can supply more than the required number of command and timing signals and can process the required serial and status data channels.

ACCOMMODATION OF ELECTRICAL INTERFACE REQUIREMENTS - CLIMATOLOGY

HUGHES

INSTRUMENT TOTALS	REQUIRED	PROVIDED
POWER, W	64[1] MAX	64
DATA STORAGE, MBITS	105.8	148.6
TELEMETRY RATE, BPS	<6994[2]	8032
TELEMETRY INTERFACE		
DIGITAL	3	16
ANALOG	2	> 50
BILEVEL	7	
SERIAL COMMANDS	3	12
DISCRETE COMMAND	8	> 50
CLOCK PULSE		
HI	2	16
LO	3	

1 INCLUDES 5W FOR PERIODIC GRS SENSOR ANNEALING

2 DSN IS AVAILABLE FOR AT LEAST 4.2 HRS/PASS DUE TO OCCULTATION

ORIGINAL PAGE IS OF POOR QUALITY

ELECTRICAL INTERFACES

Four spacecraft units provide instrument electrical interfaces to the science instruments. These include the instrument power interface unit (IPIU), remote telemetry unit (RTU), remote command unit (RCU), and central telemetry unit (CTU). The last three units are block redundant, while the IPIU is internally redundant.

The IPIU regulates and distributes power from the despun bus to the instruments via individually fused lines. The RTU accepts status data from the instruments, and the RCU distributes pulse and serial commands to the instruments. The CTU accepts instrument serial data. All these units mount on the despun shelf.

ELECTRICAL INTERFACES

HUGHES

- INSTRUMENT POWER INTERFACE UNIT (IPIU)
  - DISTRIBUTES AND REGULATES POWER FROM DESPUN BUS TO INSTRUMENTS
- REMOTE TELEMETRY UNIT
  - ACCEPTS STATUS DATA FROM INSTRUMENTS
- REMOTE COMMAND UNIT
  - DISTRIBUTES PULSE AND SERIAL COMMANDS TO INSTRUMENTS
- CENTRAL TELEMETRY UNIT
  - ACCEPTS SERIAL DATA FROM INSTRUMENTS

ORIGINAL PAGE IS
OF POOR QUALITY

DATA HANDLING CONSTRAINTS - CLIMATOLOGY

The science data handling strategy must account for the following constraints:

1) Continuous science instrument sampling in sunlight or darkness and with or without earth occultation.

2) Variation in total sampling rate over a day to account for daylight only operation of the FIS.

3) DSN available for 8 hours a day.

DATA HANDLING CONSTRAINTS - CLIMATOLOGY

HUGHES

REQUIREMENTS

- CONTINUOUS INSTRUMENT SAMPLING
- DAY/NIGHT SAMPLING VARIATION
- DSN AVAILABLE FOR 8 HOURS/DAY

ADDITIONAL CRITERION

- DSN UNAVAILABLE FOR UP TO 24 HOURS

NOMINAL CLIMATOLOGY DATA HANDLING SEQUENCE — NO COMPENSATION FOR DSN OUTAGE

The graph shows the tape recorder store and playback sequence assuming prior knowledge of DSN availability and no provision for unexpected DSN outage. In this mode, one recorder stores data for 24 hours then automatically plays the data back sequentially during the next DSN pass while the other recorder stores data for the next 24 hour period. An on-board timer controls the data handling sequence; the sequence repeats every 24 hours regardless of DSN availability.

Although each tape recorder can hold 148.6 Mbits of data, less than 105.8 Mbits are stored for a 24 hour period. At the 8032 bps telemetry rate, it takes less than 3.7 hours to dump the contents of one recorder, less time than the 4.2 hours allowed by the worst-case occultation.

A third tape recorder provides a backup. Commands can substitute it for either of the two primary units.

NORMAL DATA HANDLING SEQUENCE
CLIMATOLOGY

HUGHES

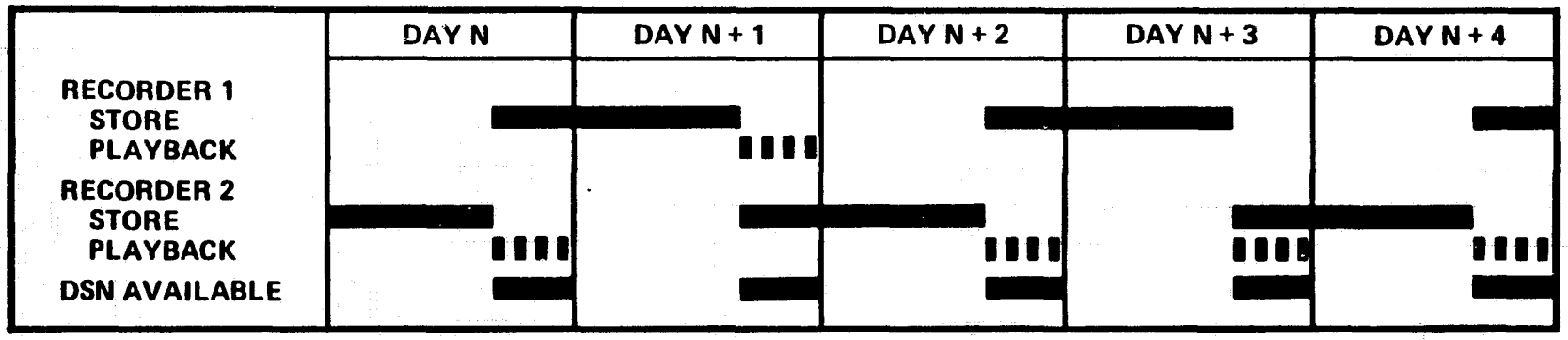

- 24 HR CONTINUOUS CHRONOLOGICAL DATA STORAGE
- MAXIMUM STORAGE <105.8 MBITS
- DATA READOUT CHRONOLOGICALLY IN 3.7 HR AT 8032 BPS

ORIGINAL PAGE IS
OF POOR QUALITY

826514-17

ALTERNATE CLIMATOLOGY DATA HANDLING SEQUENCE - COMPENSATION FOR DSN OUTAGES

With the nominal data handling strategy, if a DSN station cannot accept data from the Mars Orbiter during a scheduled pass, the data collected over the previous 24 hours are lost. A simple modification to the nominal data handling strategy recovers the lost data. The strategy requires a DSN initiation signal to begin stored data playback.

Under normal operations, one recorder stores data for 24 hours then switches to playback mode when it receives the initial signal at the start of the next DSN pass. The other recorder then begins storing data for the next 24 hours. An on-board timer controls stored data playback and turns off telemetry during occultations which last no longer than 42 minutes per orbit. An extra 8 minutes is added to the 42 minute occultation period for margin, acquisition, and command loads.

In the alternate mode, failure to receive the initiation signal results in continuing data storage for 8 hours (until the next DSN pass). The 148.6 Mbit recorder stores a maximum of 143 Mbits over this 32 hour period. Readout then requires 4.9 hours at the 8032 bps telemetry rate. With only 4.2 hours of playback assured, the recorder finishes data playback at the beginning of the next DSN pass and then switches to record mode. The other tape recorder simultaneously switches to playback mode and completely empties its 16 hour contents within 2.6 hours of the remaining 3.1 hour communication period. The sequence then reverts to normal. No science data are lost during a single DSN outage in this mode of operation.

DATA HANDLING SEQUENCE FOLLOWING DSN OUTAGE

CLIMATOLOGY

HUGHES

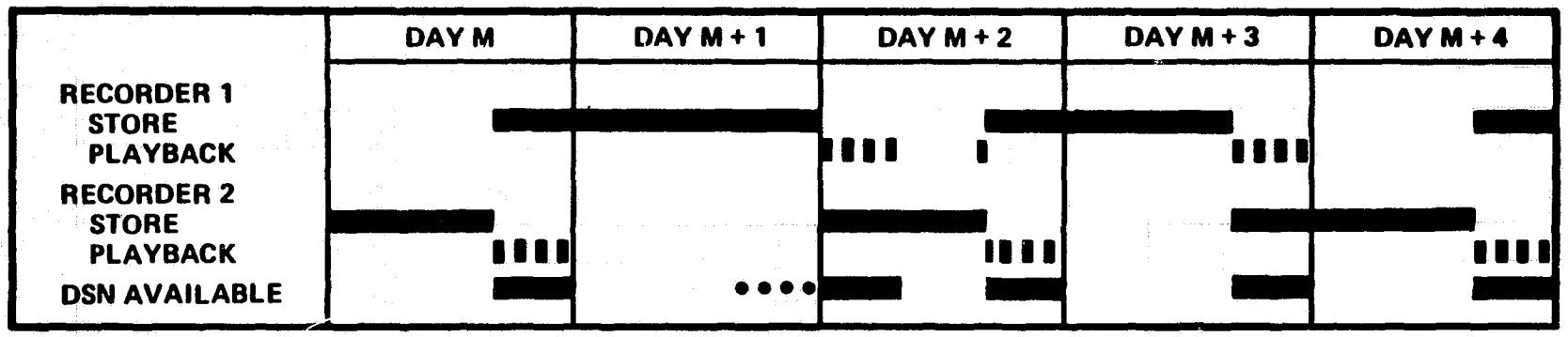

- 32 HR CONTINUOUS DATA STORAGE
- MAXIMUM STORAGE ≅ 143 MBITS
- PLAYBACK REQUIRES ~4.9 HR AT 8032 BPS
- MICROPROCESSOR-BASED DATA HANDLING AND COMMAND SUBSYSTEM CONTROLS ONBOARD SEQUENCING
- DSN INITIATION SIGNAL PRECEEDS EACH 8 HR PLAYBACK

826514-18

ORIGINAL PAGE IS OF POOR QUALITY

PRECEDING PAGE BLANK NOT FILMED

3.2 CLIMATOLOGY PAYLOAD OPTIONS

CLIMATOLOGY PAYLOAD OPTIONS

Ames has identified three alternate climatology science payloads, each of which will achieve different science objectives at Mars. The table lists the three instrument complements. Option #1 adds three instruments (the proposal baseline); Option #2 contains the Fabrey-Perot interferometer (FPI) which is part of the aeronomy payload; and Option #3 contains the multispectral mapper (MSM), a new instrument.

The following section examines the mechanical and electrical integration and data handling of each payload option.

CLIMATOLOGY PAYLOADS

HUGHES

BASELINE:	PRESSURE MODULATED RADIOMETER (PMR) FROST INFRARED SPECTROMETER (FIS) GAMMA RAY SPECTROMETER (GRS)
OPTION #1:	BASELINE INSTRUMENTS (PMR, FIS, GRS) ULTRAVIOLET OZONE INSTRUMENT (UVO3) ULTRAVIOLET HYDROGEN PHOTOMETER (UVHP) RADAR ALTIMETER (RA)
OPTION #2:	BASELINE INSTRUMENTS (PMR, FIS, GRS) FABREY-PEROT INTERFEROMETER (FPI)
OPTION #3:	PMR GRS RA MULTISPECTRAL MAPPER (MSM)

ORIGINAL PAGE IS
OF POOR QUALITY

MECHANICAL REQUIREMENTS - ALTERNATE INSTRUMENTS

The table summarizes the mass, size, and pointing requirements of the alternate instruments.

Mounting the instruments on the spacecraft's despun section requires three UVHP sensors to make measurements in the three specified viewing directions. The FPI characteristics and requirements are the same as for the aeronomy mission, and the multispectral mapper is new. Instrument pointing accuracy is 0.08° in both control and knowledge, and rate accuracy is 0.5°/sec in control and 0.2°/sec in knowledge.

MECHANICAL REQUIREMENTS - ALTERNATE INSTRUMENTS

HUGHES

INSTRUMENT	MASS, kg	DIMENSIONS, cm	INSTRUMENT ORIENTATION
UVO3	3.6	36x14x14	FORWARD LIMB
UVHP	1.2[1]	20x3x3	FORWARD LIMB[2] NADIR ZENITH
RA - ANTENNA	9	39 DIAMETER	
- ELECTRONICS		20x10x10	NADIR
FPI - OPTICS		100x30x15	TWO 10^{0} CONES AT 45^{0} & 135^{0}
- ELECTRONICS	20	25x20x25	FROM RAM VIEWING SIDE LIMB
MSM	12	25x25x25	NADIR

1 Mass per 3 sensors

2 One sensor per viewing direction

ORIGINAL PAGE IS OF POOR QUALITY

MECHANICAL REQUIREMENTS SUMMARY - PAYLOAD OPTIONS

The mass of each alternate payload is up to 20 kg more than the baseline mass. Although this additional mass depletes the reserves, spacecraft mass remains within the performance capability.

MECHANICAL REQUIREMENTS SUMMARY - PAYLOAD OPTIONS

HUGHES

PAYLOAD OPTION	TOTAL PAYLOAD MASS, kg	SPACECRAFT RESERVE MASS, kg
BASELINE	37	35.9
#1: PMR, FIS, GRS, UVO3, UVHP, RA	50.8	22.1
#2: PMR, FIS, GRS, FPI	57	15.9
#3: PMR, GRS, MSM, RA	53	19.9

ORIGINAL PAGE IS OF POOR QUALITY

SPIN AXIS ORIENTATION - PAYLOAD OPTIONS

The spacecraft spin axis is normal to the orbit plane, the same as for the baseline mission. The spacecraft shades the PMR, FIS and MSM allowing passive cooling.

SPIN AXIS ORIENTATION - PAYLOAD OPTIONS

HUGHES

- SAME ORIENTATION AS BASELINE MISSION

- SPACECRAFT ORIENTATION PROVIDES SURFACE FOR PASSIVE RADIATORS - PMR, FIS, MSM

INSTRUMENT LAYOUTS - ALTERNATE PAYLOADS

The alternate payloads mount on the despun section like the baseline payload. Instrument placement maintains spacecraft mass properties while meeting individual pointing requirements and fields-of-view. Three separate UVHP sensors are needed to look at the forward limb, nadir, and zenith, since the instrument is despun. The FPI mounts through the despun shelf, its long axis parallel to the spacecraft's spin axis. In this orientation an internal mirror makes limb measurements 23° from the boresight axis. The MSM mounts on the instrument platform with its boresight in the nadir direction.

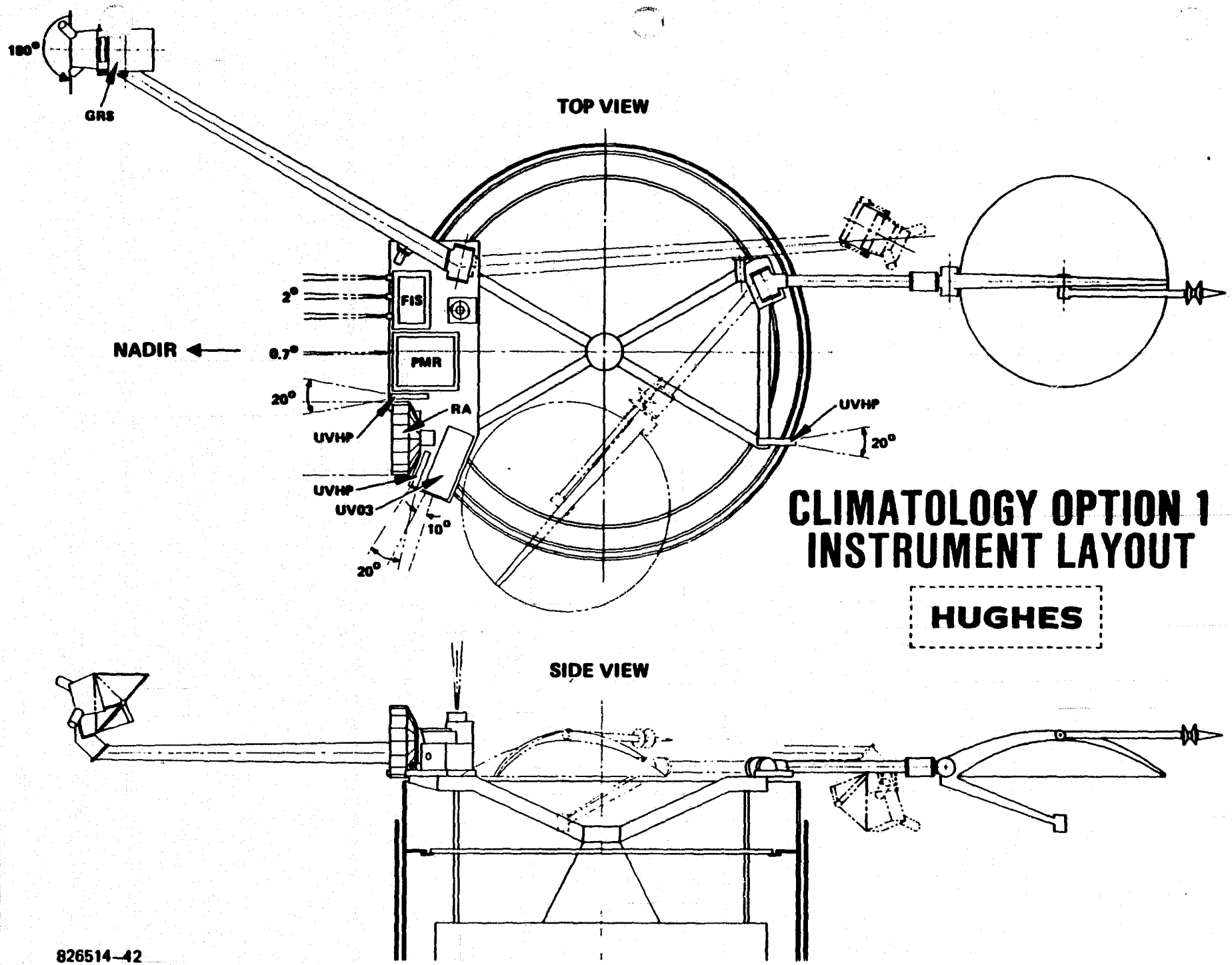

CLIMATOLOGY OPTION 1 INSTRUMENT LAYOUT

HUGHES

ORIGINAL PAGE IS OF POOR QUALITY

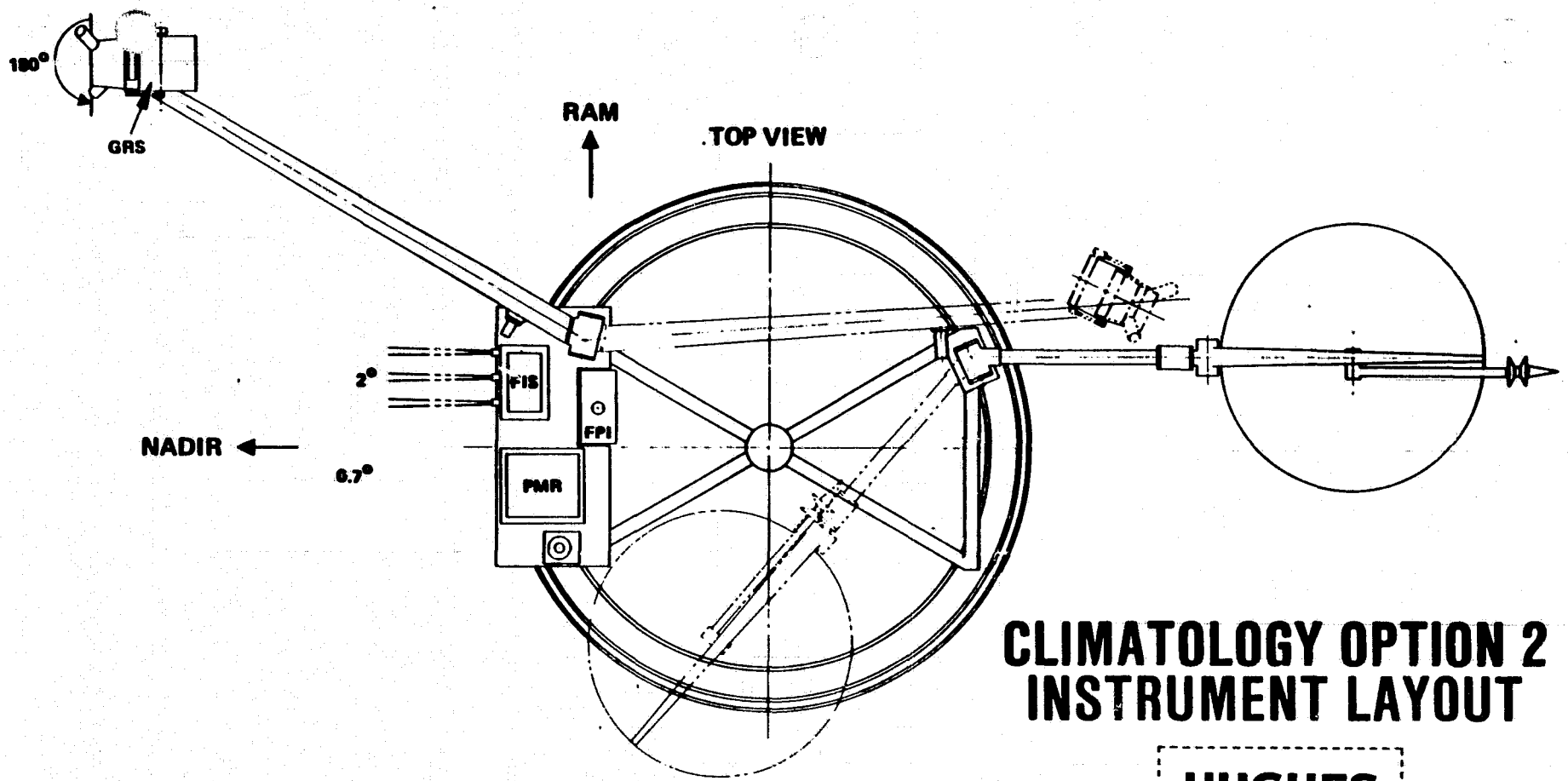

CLIMATOLOGY OPTION 2 INSTRUMENT LAYOUT

HUGHES

ORIGINAL PAGE IS OF POOR QUALITY

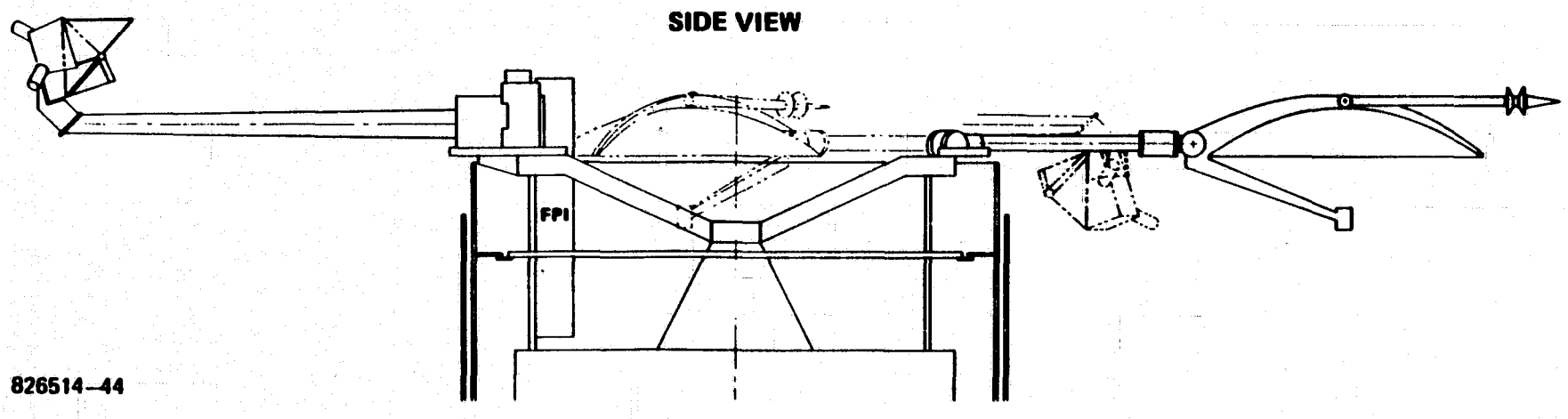

826514–44

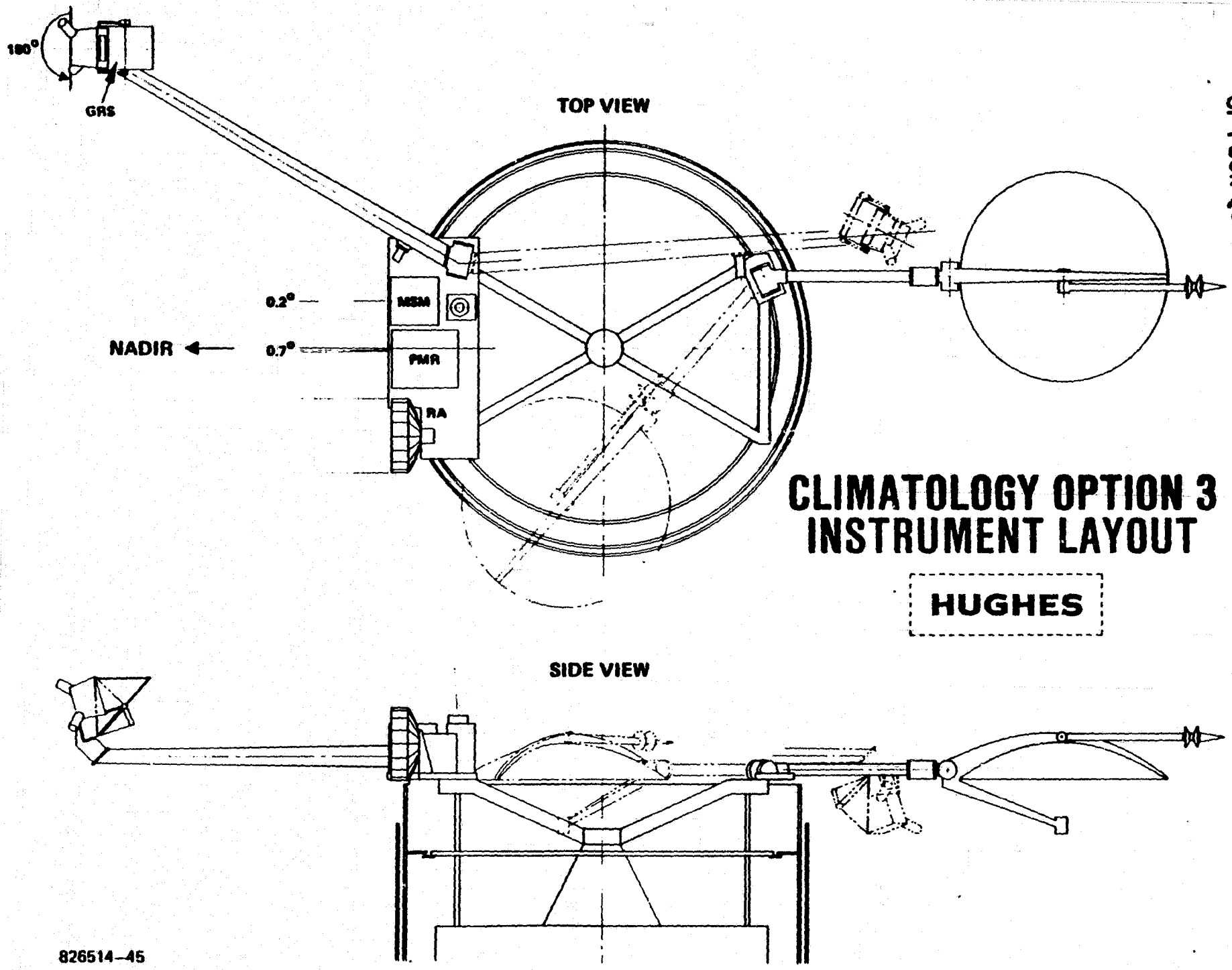

CLIMATOLOGY OPTION 3 INSTRUMENT LAYOUT

HUGHES

ORIGINAL PAGE IS OF POOR QUALITY

ELECTRICAL REQUIREMENTS - ALTERNATE INSTRUMENTS

The table summarizes the electrical requirements for the alternate instruments. The requirements listed for the UVHP are for three sensors.

All instruments operate at their maximum data rates during local daylight hours; the FIS, FPI, UVO3, and MSM suspend sampling during the night.

ELECTRICAL REQUIREMENTS - ALTERNATE INSTRUMENTS

HUGHES

INSTRUMENT	MAXIMUM POWER, W	MAXIMUM DATA RATE, bps	TELEMETRY ANALOG/ DIGITAL	SERIAL COMMAND	BILEVEL STATUS	PULSE COMMAND	CLOCK RATE HI/LO
UVO3	1.5	64	1/1	0	2	2	0/1
UVHP[1]	3	8	1/1	0	2	2	0/1
RA	16	100	1/1	1	2	2	1/1
FPI	12	256	0/1	1	4	2	1/1
MSM	12	1000[2]	0/1	1	4	4	1/1

[1] Data for 3 sensors.

[2] Average rate over 24 hours.

ORIGINAL PAGE IS OF POOR QUALITY

ACCOMMODATION OF ELECTRICAL INTERFACE REQUIREMENTS -- CLIMATOLOGY PAYLOAD OPTIONS

Compared with the baseline payload, all of the optional payloads need more power (up to 20 watts). Increasing the spacecraft solar panel length supplies this power.

The maximum instrument data storage capacity does not exceed spacecraft capability in the normal operating mode (24 hours between DSN pass initiation) except for Option #3. The required storage exceeds recorder capacity for all options in the backup mode (32 hours between DSN pass initiation). Increasing the tape recorder size or decreasing the instrument sampling rate avoids this condition.

The spacecraft provides the command and telemetry channel capacity for all payload alternatives.

ACCOMMODATION OF ELECTRICAL INTERFACE REQUIREMENTS – PAYLOAD OPTIONS

HUGHES

	BASELINE	OPTION #1	OPTION #2	OPTION #3	PROVIDED BY SPACECRAFT
POWER[1], W	59.0	79.5	71.0	83.0	(2)
MAX. DATA STORAGE RATE, bps	1284	1456	1540	2264	8000
DATA STORAGE, Mbits - 24 hr.	105.7	117.8	116.8	195.6	148.6
DATA STORAGE, Mbits - 32 hr.	142.7	159.8	161.2	289.6	148.6
TELEMETRY					
DIGITAL	3	6	4	4	16
ANALOG	2	5	2	2	>50
BILEVEL	7	13	11	10	
COMMANDS					
SERIAL	3	4	4	4	12
PULSE	8	14	10	12	>50
CLOCK RATE					
HI	2	3	3	3	16
LO	3	6	4	4	

[1] Does not include 5 w for periodic GRS sensor annealing.

[2] Additional instrument power provided by solar panel length increase.

ORIGINAL PAGE IS OF POOR QUALITY

ELECTRICAL INTEGRATION - PAYLOAD OPTIONS

The payload options interface electrically with the spacecraft via the same interfaces as the baseline climatology and aeronomy payloads. The data handling constraints are also identical with those for the baseline mission.

ELECTRICAL INTEGRATION - PAYLOAD OPTIONS

HUGHES

- ELECTRICAL INTERFACES SAME AS BASELINE
  - INSTRUMENT POWER INTERFACE UNIT (IPIU)
  - REMOTE TELEMETRY & COMMAND UNITS
  - CENTRAL TELEMETRY UNIT
- DATA HANDLING CONSTRAINTS ARE IDENTICAL TO BASELINE

  NORMAL OPERATING MODE:
  - CONTINUOUS INSTRUMENT SAMPLING
  - DAY/NIGHT SAMPLING VARIATION
  - DSN AVAILABLE FOR 8 HOURS/DAY (16 HOURS BETWEEN DSN PASSES)

  BACK-UP MODE:
  - 24 HOURS BETWEEN DSN AVAILABILITY

DATA HANDLING SEQUENCE - NORMAL OPERATION - PAYLOAD OPTIONS

The normal data handling sequence is identical to the one described for the baseline mission. Two tape recorders allow continuous instrument sampling. One recorder stores instrument data continuously for 24 hours, then plays the data back at 8032 bps over the following 8 hour DSN window while the other recorder begins storing the next 24 hours of data. An on-board timer controls the store/playback sequence and automatically suspends playback during occultations.

The 4.2 hour playback time per 24 hour period can return stored data for payload Options #1 and #2. Because the MSM and GRS both have relatively high sampling rates, the 24 hour data storage required by Option #3 exceeds the size of the tape recorder. Even with a larger recorder, data playback would require more time than the allowed 4.2 hours. Increasing the tape recorder capacity (and the allowed DSN coverage), decreasing the average instrument sampling rate by more than 544 bps, or a combination of both could accommodate this payload.

NORMAL DATA HANDLING SEQUENCE - PAYLOAD OPTIONS

HUGHES

- TWO TAPE RECORDERS REQUIRED FOR CONTINUOUS INSTRUMENT SAMPLING
- EACH RECORDER ALTERNATELY STORES DATA CONTINUOUSLY FOR 24 HOURS BETWEEN DSN PASSES
- RECORDER PLAYBACK TIMES AT 8032 BPS:

  BASELINE - 3.66 HRS.
  OPTION #1 - 4.08 HRS.
  OPTION #2 - 4.03 HRS.
  OPTION #3 - 6.77 HRS.

- MINIMUM PLAYBACK TIME AVAILABLE PER DSN PASS IS 4(73-10) MIN. = 4.2 HOURS (ALLOWING 10 MIN./ORBIT FOR OUTAGE & ACQUISITION)
- OPTION #3 CANNOT BE ACCOMMODATED UNDER GIVEN CONDITIONS
  - REQUIRED STORAGE EXCEEDS TAPE RECORDER CAPACITY
  - DATA CANNOT BE PLAYED BACK DURING TIMES OF MAXIMUM OCCULTATIONS

OPTIONAL PAYLOAD ACCOMMODATION SUMMARY

The spacecraft mechanically and electrically accommodates the alternate climatology payloads. The instruments mount on the despun section to satisfy the instruments' pointing, field of view, and passive cooling requirements. All instruments receive power from the instrument power interface unit, receive commands from the despun remote command unit, transmit status telemetry to the remote telemetry unit and send serial data samples to the central telemetry unit. Mass of the optional payloads reduces the spacecraft reserve. The additional power requires longer solar panels.

In the normal operating mode, the tape recorder capacity is sufficient for payload options #1 and #2 with the stored data played back during one DSN window, even for the worst occultations. The normal mode for Option #3 and all back up modes (32 hours between DSN initiations) for all of the payload options need larger recorders, decreased sampling rates, or both. Solutions to both problems are to increase the recorder capacity, decrease the sampling rate, or a combination of both.

The 0.08° pointing control specified for the optional instruments requires constant monitoring of the spacecraft attitude (via star tracker telemetry) and frequent (approximately once every 2 orbits) update of spacecraft attitude. This violates the specified 8 hour/day DSN availability constraint. The attitude control section provides more detail on instrument pointing and attitude determination.

OPTIONAL PAYLOAD ACCOMMODATION SUMMARY

HUGHES

- DESPUN SECTION MECHANICALLY ACCOMMODATES ALL INSTRUMENT CONFIGURATIONS
  - MASS REQUIRED FOR PAYLOAD OPTIONS REDUCES SPACECRAFT RESERVES
  - 0.08^{0} POINTING CONTROL REQUIRES CONTINUOUS DSN MONITORING AND UPDATE OF S/C ATTITUDE

- IPIU & REMOTE UNITS ELECTRICALLY ACCOMMODATE PAYLOAD OPTIONS
  - ADDITIONAL POWER PROVIDED BY INCREASED SOLAR PANEL LENGTH

- NORMAL DATA HANDLING SEQUENCE ACCOMMODATED FOR AN 8 HR. DSN PASS EVERY 24 HOURS FOR ALL PAYLOADS EXCEPT OPTION #3 WHICH REQUIRES INCREASED STORAGE CAPACITY OR DECREASED INSTRUMENT SAMPLING
  - FOR ALL OPTIONS, BACKUP MODE REQUIRES LARGER STORAGE CAPACITY OR DECREASED INSTRUMENT SAMPLING, AND A LONGER DSN PASS

PRECEDING PAGE BLANK NOT FILMED

3.3 AERONOMY MISSION

INSTRUMENT MECHANICAL REQUIREMENTS - AERONOMY

The table lists mass, dimension, and orientation specifications for the nine aeronomy instruments. The one meter long FPI dominates the ram-oriented shelf but still fits without any significant changes to the structure.

INSTRUMENT MECHANICAL REQUIREMENTS - AERONOMY

HUGHES

ORIGINAL PAGE IS OF POOR QUALITY

INSTRUMENT	MASS KG	DIMENSIONS, CM	INSTRUMENT ORIENTATION
NMS - SENSOR	3.5	16x20x18	RAM
NMS - ELECTRONICS	5.5	16x16x8	
TIMS	3	13x27x16	RAM
ETP - 3 SENSORS	3	40x0.5	3 ORTHOGONAL SENSORS;
- ELECTRONICS	3	6x6x6	1 SENSOR 11 SPIN AXIS
RPA	4.5	12x15x24	RAM
MAG - ELECTRONICS	2	11x22x15	3 ORTHOGONAL SENSORS;
3 SENSORS	0.8	9x6x6	2 AT BOOM END; 1 MIDWAY ALONG BOOM
BOOM	7	23CM X 6.1M, DEPLOYED	
EPA - SENSOR	0.5	0.75M/DIPOLE	DIPOLE PLANE + SPIN AXIS
- ELECTRONICS	1	7x19x8	
SWPA	4	18x18x28	SPINNING
UVS	3	12x36x14	FORWARD LIMB
FPI - SENSOR	20	100x30x15	45^0 & 135^0 FROM RAM
- ELECTRONICS		25x20x25	

MECHANICAL REQUIREMENTS SUMMARY - AERONOMY

The sum of the specified instrument masses given in the preceding table is 59.5 kg including the mass of the retarding potential analyzer (RPA) conducting surface. Because the magnetometer (MAG) and the electron temperature probe (ETP) are despun, the required orthogonal field measurements need a third sensor on each instrument. Also, the Astromast MAG boom requires 0.5 kg more than the specification value. These changes add 1.8 kg to the total instrument mass on the aeronomy mission.

All of the instruments except the solar wind plasma analyzer (SWPA) mount on the despun section. The neutral and ion mass spectrometers (NMS, IMS), the ultra-violet spectrometer (UVS), the Fabrey-Perot interferometer (FPI), and the RPA are at angles relative to the ram direction at periapsis. These instruments mount on a hinged ram-oriented shelf which, combined with platform rotation, keeps the instruments pointed in the ram direction at periapsis during the entire mission.

MECHANICAL REQUIREMENTS SUMMARY - AERONOMY

HUGHES

- TOTAL INSTRUMENT MASS = 59.5 kg SPECIFIED (INCLUDES 1 kg RPA SURFACE)

MAG SENSOR =	0.3 kg
ETP SENSOR =	1 kg
MAG BOOM CHANGE (ASTROMAST) =	0.5 kg
TOTAL	61.3 kg

- NMS, TIMS, RPA, UVS, & FPI LOCATE ON RAM-ORIENTED PLATFORM
- SWPA VIEWS THROUGH SOLAR ARRAY ON SPINNING SHELF

SPIN AXIS ORIENTATION - AERONOMY

Although the spacecraft's spin axis lies normal to Mars' orbit plane for engineering reasons, the design meets all instrument pointing and field of view requirements. The ram-oriented shelf points the five (NMS, TIMS, RPA, UVS, and FPI) ram-oriented instruments in the velocity direction at periapsis. Shelf elevation control from 0° (Mars orbit plane) to 90° (along spin axis) and despun platform azimuth control (typical stored command update once per orbit) maintain ram pointing to within 0.5 degrees at periapsis. Inverting the spacecraft reaches negative elevations.

SPIN AXIS ORIENTATION – AERONOMY

HUGHES

- SPIN AXIS $\perp$ MARS ORBIT PLANE

- RAM ORIENTED SHELF FULFILLS INSTRUMENT POINTING REQUIREMENTS

INSTRUMENT LAYOUT - AERONOMY

The spacecraft design provides a spinning mounting location for the SWPA and a despun platform for the rest of the instruments. The SWPA mounts on the spinning shelf and views through a small cutout in the solar drum. Because the spacecraft spins at 60 rpm, the instrument achieves high resolution.

The NMS, TIMS, and RPA require ram alignment at periapsis, and the FPI sensors must view at two angles relative to the ram direction. Mounting these instruments on a ram-oriented shelf meets their viewing requirements. The UVS also attaches to the shelf with its boresight offset 16.7 degrees from ram to measure the forward limb at periapsis.

The magnetometer boom design is an Astromast design. This lightweight, 6.2 m long boom, flown on Dynamic Explorer, allows room for other instruments on the despun platform when stowed. It deploys after Mars orbit insertion.

The electric field detector (EFD), forming a vee-type antenna dipole with an included angle of 60 degrees, has sensors which extend beyond the edge of the spacecraft. With no specified orientation, the instrument placement only considers dynamic balance. The instrument launches in its flight configuration without any deployment mechanisms. The sensors must withstand launch loads.

The electron temperature probe (ETP) consists of three thin, cylindrical sensors mounted on orthogonal booms. One boom is parallel with the spacecraft spin axis. Although the instrument is shown launched in its deployed configuration, the booms can be stowed if load calculations or the launch envelope require it.

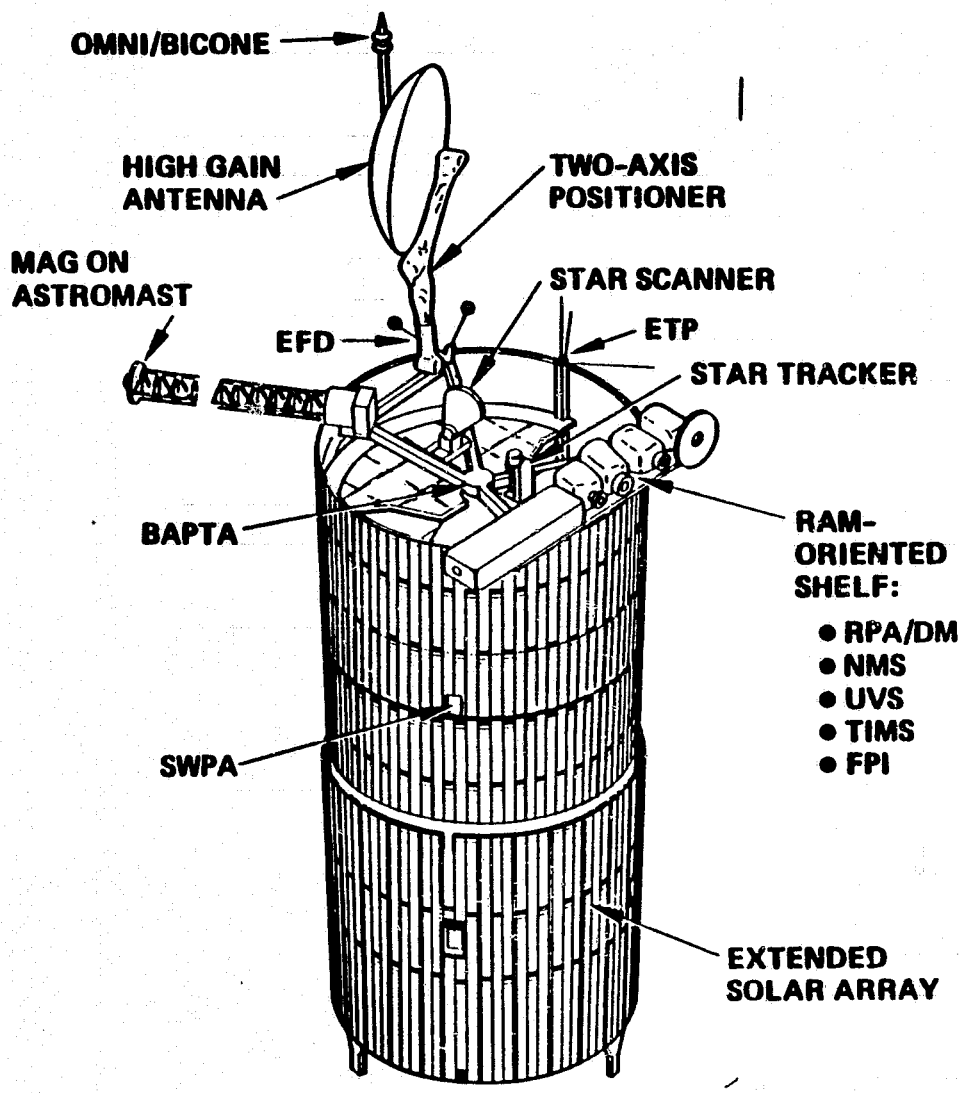

HUGHES

INSTRUMENTS AND HGA MOUNT ON TOP OF HS 376 DESPUN STRUCTURE

826514–103

ORIGINAL PAGE IS OF POOR QUALITY

AERONOMY INSTRUMENT LAYOUT

TOP VIEW

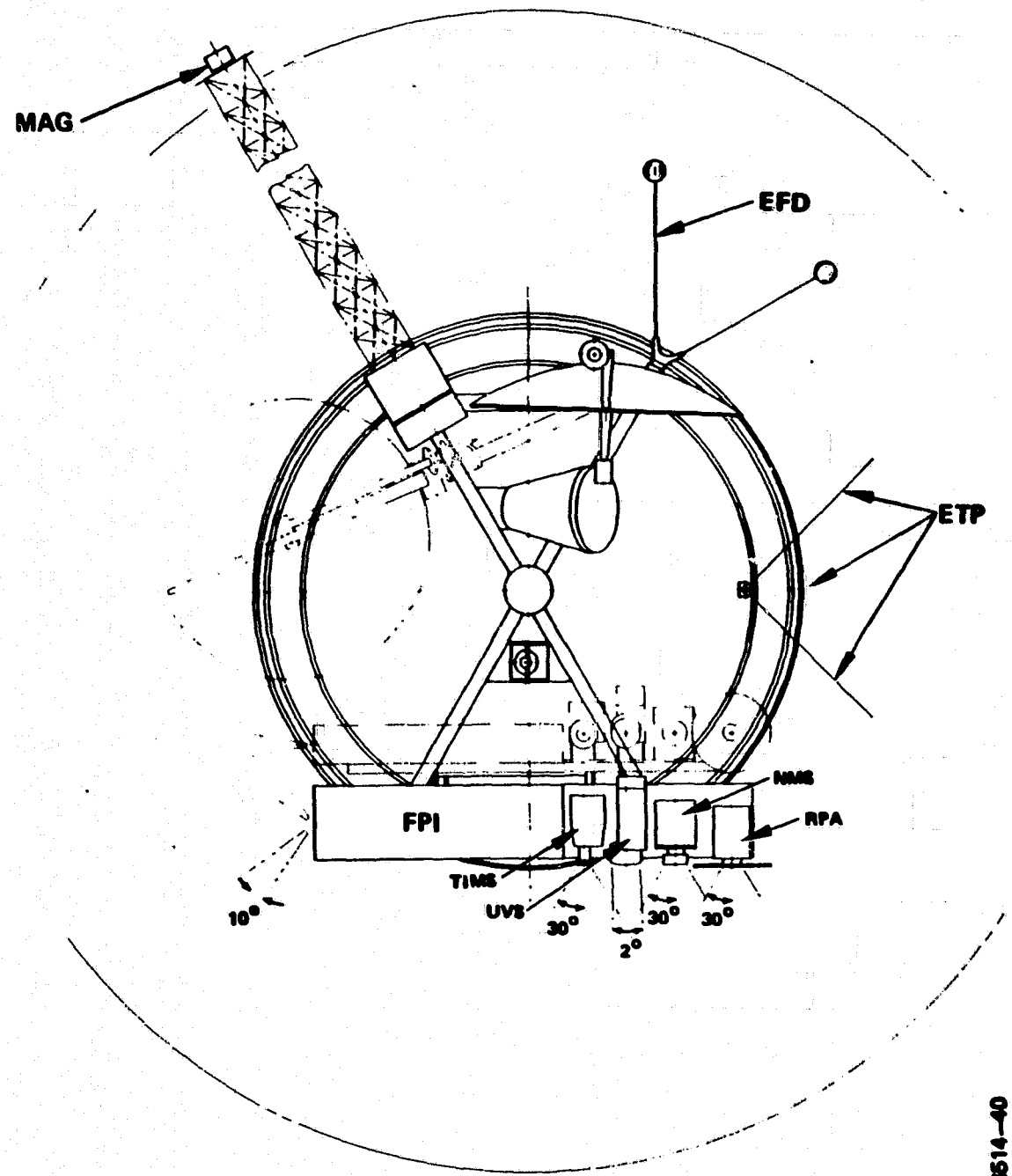

ORIGINAL PAGE IS
OF POOR QUALITY

E2061-40

AERONOMY INSTRUMENT LAYOUT
SIDE VIEW

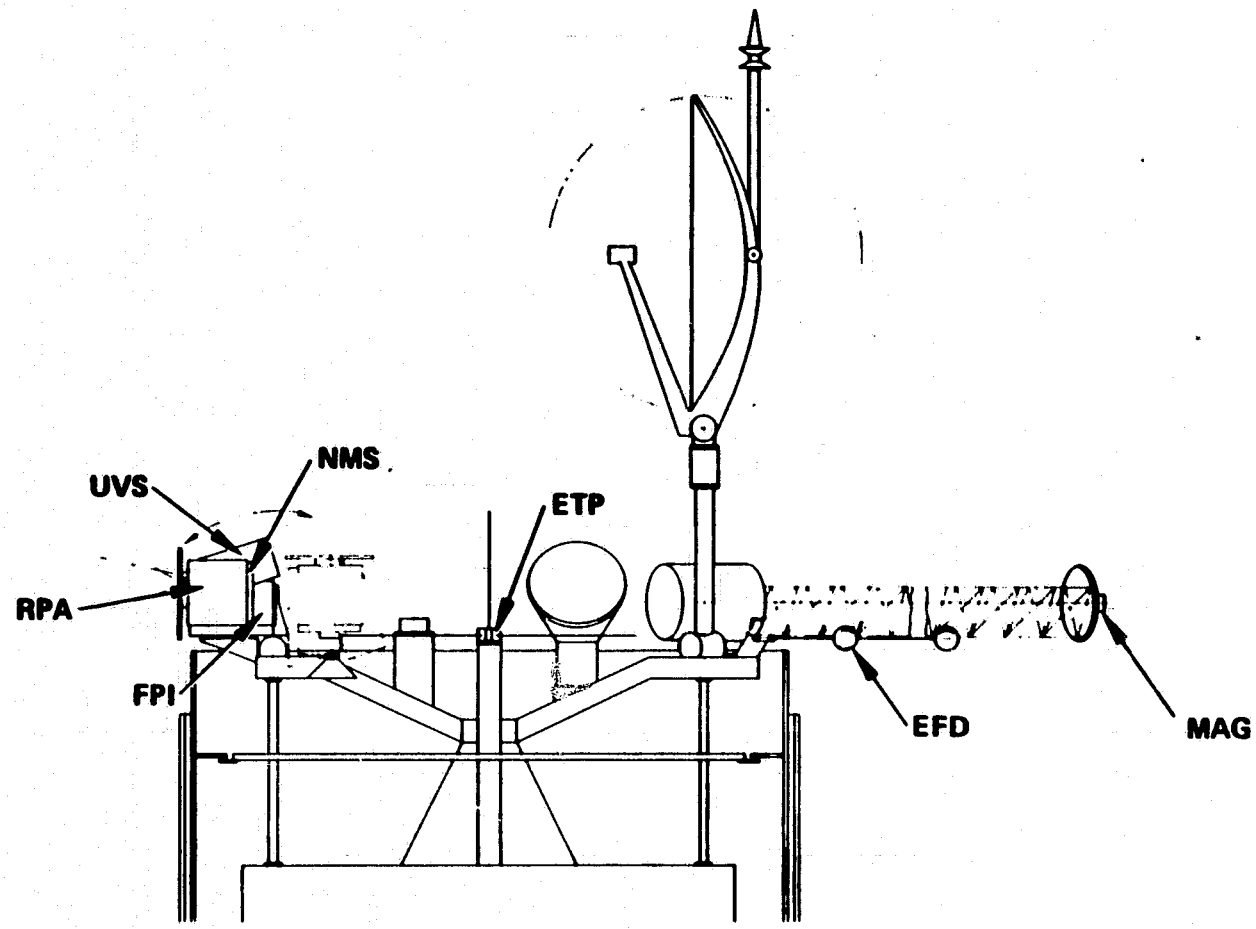

826514-41

ORIGINAL PAGE IS
OF POOR QUALITY

HUGHES

ARRANGEMENT OF SWPA ON SPINNING SHELF

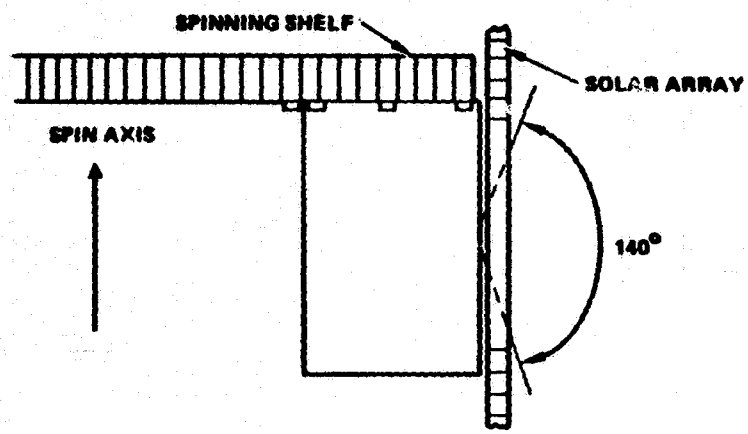

SIDE VIEW

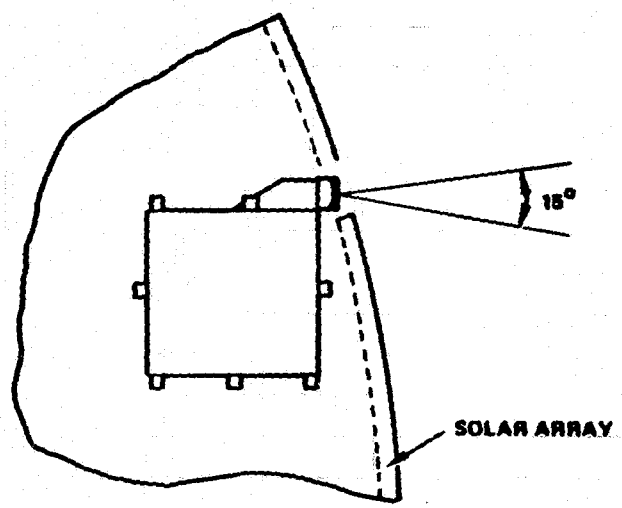

BOTTOM VIEW

826514-50

ORIGINAL PAGE IS OF POOR QUALITY

PRECEDING PAGE BLANK NOT FILMED

ELECTRICAL REQUIREMENTS - AERONOMY

The table lists aeronomy instrument electrical requirements. The power used by the instruments ranges between 1.3 W when the instruments are all in standby mode, to 46.5 W when they are all in their periapsis operating mode. The maximum data sampling rate of 2048 bps occurs in this periapsis region as well. Both power and data rate decrease as the spacecraft moves outside the periapsis region into the ionosheath region, when the NMS returns to standby. Here, the TIMS, ETP, and FPI sample at half their maximum data collection rate and the RPA samples at one-fourth its maximum rate. The ionosheath period lasts for about 83 minutes on either side of periapsis, with a total instrument power of 31.6 W and data storage at 1024 bps. After the spacecraft leaves the outer atmosphere, it enters the apoapsis phase of its orbit. Here, the TIMS, UVS, and FPI return to standby and the ETP and RPA sample at half their previous rates. This phase of the orbit lasts approximately 230 minutes with minimal required instrument power of 21.3 W and a data sampling rate of 512 bps.

ELECTRICAL REQUIREMENTS - AERONOMY

HUGHES

INSTRUMENT	POWER W	MAXIMUM DATA RATE, BPS	TELEMETRY ANALOG/ DIGITAL	SERIAL COMMAND	BILEVEL STATUS	PULSE COMMAND	CLOCK RATE HI/LO
NMS	15.0	256	0/1	1	3	2	1/1
TIMS	1.5	256	2/1	0	3	4	0/1
ETP	3.0	256	2/1	0	3	2	0/1
RPA	4.0	512	0/1	1	4	2	0/1
MAG	3.0	128	1/1	1	2	4	1/1
EFD	1.0	128	4/0	0	2	2	0/1
SWPA	5.0	128	2/1	1	2	2	0/1
UVS	2.0	128	5/1	0	2	3	0/1
FPI	12	256	0/1	1	3	2	1/1
TOTAL	46.5	2048	16/8	5	24	23	3/9

ORIGINAL PAGE IS OF POOR QUALITY

ACCOMMODATION OF ELECTRICAL INTERFACE REQUIREMENTS — AERONOMY

The chart below summarizes the electrical requirements for the aeronomy science payload. The maximum required power, data storage, and playback rate are less than for the climatology payload. The minimum available playback time of 5.7 hours, where the spacecraft is occulted for two 70 minute periods during an 8 hour DSN pass, is sufficient to play back the 73.5 Mbits of stored data (read out time is 5.1 hours). The 148.6 Mbit Odetics recorders can easily store the science data.

The spacecraft provides the instruments with all the required electrical signals.

ACCOMMODATION OF ELECTRICAL INTERFACE REQUIREMENTS – AERONOMY

HUGHES

INSTRUMENT TOTALS	REQUIRED	PROVIDED
POWER, W	46.5 MAX	46.5
DATA STORAGE, MBITS	73.5	148.6
TELEMETRY RATE, BPS	2551[1] - 3602[2]	4016
TELEMETRY INTERFACE		
DIGITAL	8	16
ANALOG	16	> 50
BILEVEL	24	
SERIAL COMMANDS	5	12
DISCRETE COMMANDS	23	> 50
HI	3	16
LO	9	

[1] ASSUMES NO OCCULTATIONS DURING DSN PASS

[2] ASSUMES TWO 70 MIN. OCCULTATIONS DURING DSN PASS

ELECTRICAL INTERFACES - AERONOMY

The instrument power interface unit (IPIU), the remote command unit (RCU), the remote telemetry unit (RTU), and the central telemetry unit (CTU) interface with the science instruments. The previous section on climatology science integration describes these interfaces in more detail.

ELECTRICAL INTERFACES – AERONOMY

HUGHES

- INSTRUMENT POWER INTERFACE UNIT (IPIU)
  - DISTRIBUTES AND REGULATES POWER FROM DESPUN BUS TO INSTRUMENTS
- REMOTE TELEMETRY UNIT
  - ACCEPTS STATUS DATA FROM INSTRUMENTS
- REMOTE COMMAND UNIT
  - DISTRIBUTES PULSE AND SERIAL COMMANDS TO INSTRUMENTS
- CENTRAL TELEMETRY UNIT
  - ACCEPTS SERIAL DATA FROM INSTRUMENTS

DATA HANDLING CONSTRAINTS - AERONOMY

The science data handling strategy must account for the following constraints:

1) Continuous science instrument sampling in sunlight or darkness and with or without occultation.

2) Variation in sampling over a 6.7 hour orbit period.

3) DSN availability for no more than 8 hours a day.

In the normal data handling mode, the DSN is available every 24 hours. The backup mode (similar to that described for the climatology mission) allows for up to 32 hours between the start of DSN communications periods.

DATA HANDLING CONSTRAINTS - AERONOMY

HUGHES

SPECIFICATIONS:

- CONTINUOUS INSTRUMENT SAMPLING
- VARIATION IN SAMPLING OVER 6.7 HOUR ORBIT
- DSN AVAILABLE FOR NO MORE THAN 8 HOURS/DAY

ADDED CRITERION:

- DSN UNAVAILABLE FOR UP TO 24 HOURS

NOMINAL AERONOMY DATA HANDLING SEQUENCE - NO COMPENSATION FOR DSN OUTAGES

The chart shows the tape recorder store and playback sequence assuming prior knowledge of DSN availability and no DSN outages. One tape recorder stores data for the 24 hour period between start of DSN passes, then automatically reads the data out sequentially over the following DSN pass. The other recorder then begins to store data for the next 24 hour period. An on-board timer controls the data handling sequence; the sequence repeats every 24 hours regardless of DSN availability.

Although each tape recorder has 148.6 Mbit capacity, less than 73.5 Mbits suffice for a 24 hour period. Data playback takes about 5.1 hours at the 4016 bps telemetry rate. During occultations, the on-board timer puts the playback recorder into standby until communications resumes. The worst case occultation is 70 minutes long.

A third tape recorder serves as a backup. Commands activate it if a primary recorder fails.

NOMINAL AERONOMY DATA HANDLING SEQUENCE – NO COMPENSATION FOR DSN OUTAGE

HUGHES

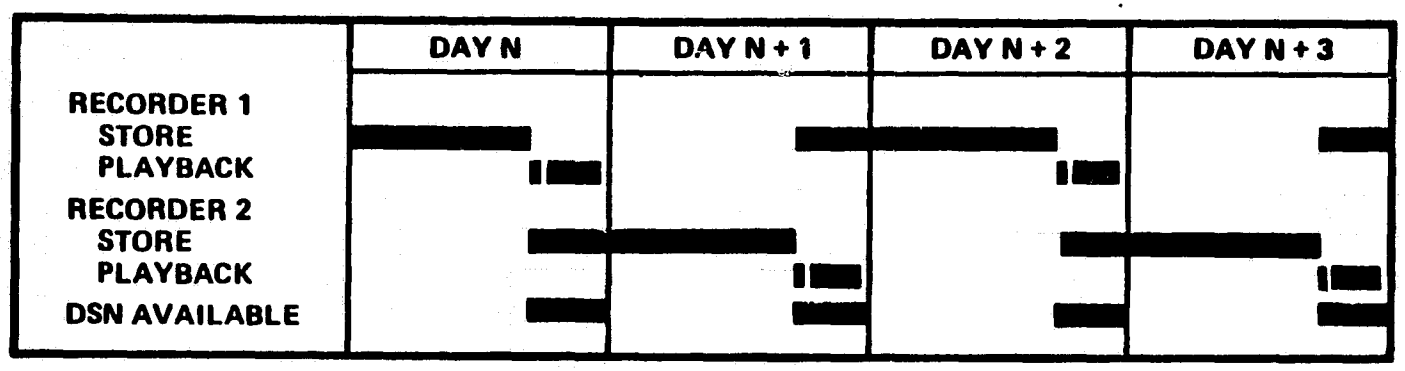

- MAXIMUM OCCULTATION OF 70 MIN/6.7 HR. ORBIT
- 24 HR. CONTINUOUS CHRONOLOGICAL DATA STORAGE
- MAXIMUM STORAGE < 73.5 MBIT
- PLAYBACK REQUIRES 5.1 HR. AT 4016 BPS
- MICROPROCESSOR - BASED DATA HANDLING & COMMAND SUBSYSTEMS CONTROL ON-BOARD SEQUENCING
- REQUIRES NO DSN INITIATION SIGNAL

ORIGINAL PAGE IS OF POOR QUALITY

ALTERNATE AERONOMY DATA HANDLING SEQUENCE - COMPENSATION FOR DSN OUTAGE

With the nominal data handling strategy, if a DSN station cannot accept data from the Mars orbiter during a scheduled pass, the data collected over the previous 24 hours are lost. A simple modification to the nominal data handling strategy recovers the lost data. The strategy requires a DSN initiation signal to begin stored data playback.

Under normal operations, one recorder stores data for 24 hours then switches to playback mode when it receives the initiation signal at the start of the next DSN pass. The other recorder then begins storing data for the next 24 hours. An on-board timer controls stored data playback and turns off telemetry during occultations which last no longer than 70 minute per orbit. An extra 10 minutes is added to the 70 minute occultation period for margin, acquisition, and command loads.

In the alternate mode, failure to receive the initiation results in continuing data storage for 8 hours (until the next DSN pass). The 148.6 Mbit recorder stores a maximum of 95.5 Mbits over this 32 hour period. Readout then requires 6.6 hours at the 4016 bps telemetry rate. With only 5.4 hours of playback assured, the recorder finishes data playback at the beginning of the next DSN pass and then switches to record mode. The other tape recorder simultaneously switches to playback mode and completely empties its 16 hour contents within 4 hours of the remaining 4.2 hour communication period. The sequence then reverts to normal. No science data are lost during a single DSN outage in this mode of operation.

ALTERNATE AERONOMY DATA HANDLING SEQUENCE – COMPENSATION FOR DSN OUTAGE

HUGHES

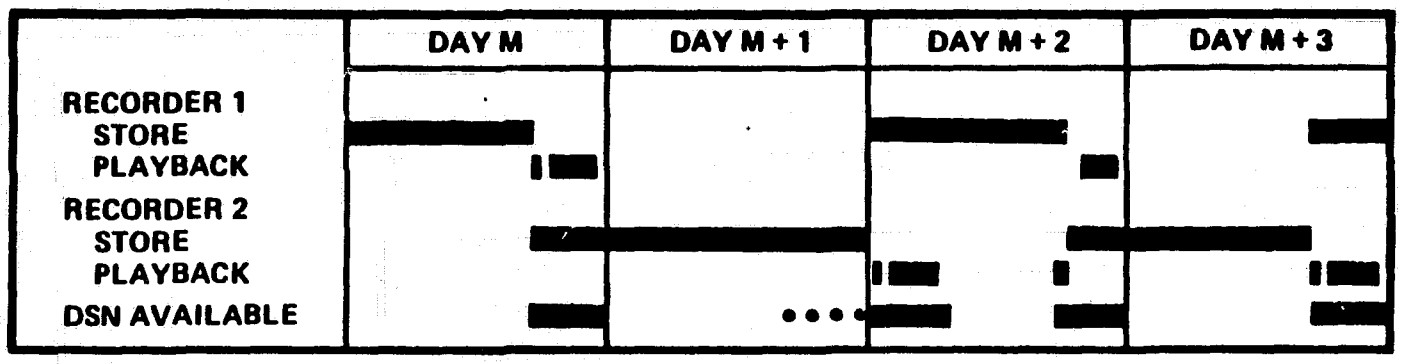

- MAXIMUM OCCULTATION = 70 MIN/6.7 HR. ORBIT
- 32 HR. CONTINUOUS DATA STORAGE
- MAXIMUM STORAGE, 95.5 MBIT
- PLAYBACK REQUIRES 6.6 HR. AT 4016 BPS
- MICROPROCESSOR - BASED DATA HANDLING & COMMAND SUBSYSTEMS CONTROL ON-BOARD SEQUENCING
- DSN INITIATION SIGNAL PRECEDES EACH PLAYBACK PERIOD

ORIGINAL PAGE IS OF POOR QUALITY

SCIENCE INSTRUMENT SUMMARY

In summary, all climatology payloads and the aeronomy payload integrate mechanically and electrically with the existing spacecraft design. All instruments mount on the despun platform except for the SWPA which mounts on the spinning shelf in the aeronomy mission. Because the instruments are despun, the magnetometer and the electron temperature probe on the aeronomy spacecraft require an additional sensor to view the orthogonal direction; for climatology payload Option 3, three ultra-violet hydrogen photometer sensors sample the three specified viewing directions (nadir, forward limb, and zenith). The gamma-ray spectrometer (climatology) and the magnetometer (aeronomy) are both boom mounted -- the former is a single segment, one arm boom, and the latter is an Astromast design. Both booms deploy after Mars orbit insertion. The five aeronomy instruments with ram orientation requirements mount on a positioning shelf which maintains ram pointing at periapsis.

The instruments on both missions electrically interface with the spacecraft by the redundant remote command and telemetry units. The instrument power interface unit distributes and regulates power from the despun bus to the instruments. An on-board timer controls the instrument sampling and the data handling sequence. Two operating modes are available; the alternative mode compensates for a DSN outage but requires a DSN signal to start data playback. Two tape recorders provide data storage and playback with a third recorder for backup.

SCIENCE INSTRUMENT SUMMARY

HUGHES

- SPACECRAFT DESIGN ACCOMMODATES ALL BASELINE PAYLOAD REQUIREMENTS

- ALTERNATE PAYLOADS REQUIRE LENGTHENED SOLAR PANELS AND INCREASED TAPE RECORDER CAPACITY

4. SPACECRAFT SYSTEM DESIGN

SPACECRAFT SYSTEM DESIGN

This section shows how the science pointing requirements and the selection of the HS-376 bus leads to the selected on-orbit attitude and configuration for the climatology and aeronomy missions. Descriptions of the Mars orbiters in cruise and deployed configurations follow. The comparison of their key features shows the commonality of the two spacecraft. Mass and power budgets and a design summary conclude the section.

- CONFIGURATION DESIGN
- CLIMATOLOGY ORBITER CONFIGURATION
- AERONOMY ORBITER CONFIGURATION
- KEY FEATURES
- MASS SUMMARIES
- POWER BUDGET
- DESIGN SUMMARY

CLIMATOLOGY SCIENCE INSTRUMENT REQUIREMENTS

All three climatology instruments (and the three alternates) require nadir pointing. The 1:30 to 3:00 lighting requirement results in sun angles of 22.5° to 45° from the semi-sun-synchronous orbit plane. The first requirement sets the spacecraft's attitude normal to the orbit plane; the latter, coupled with the variation in Mars' distance from the sun, constrains the power.

CLIMATOLOGY SCIENCE INSTRUMENT REQUIREMENTS

HUGHES

- SCIENCE INSTRUMENTS ORIENTED TOWARD NADIR

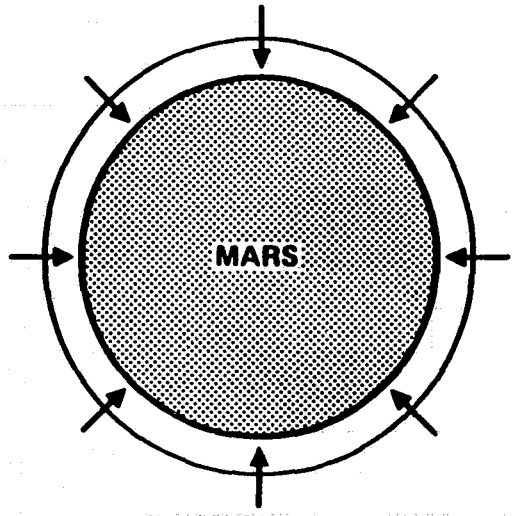

VIEW FROM ORBIT NORMAL

- SUN ANGLES FROM 1:30 TO 3:00 PM

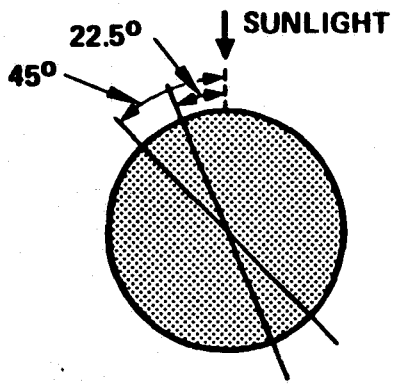

VIEW FROM NORTH

ORIGINAL PAGE IS OF POOR QUALITY

826514–5

SELECTED CLIMATOLOGY CONFIGURATION

The dual spin HS-376 spacecraft consists of a spinning body (rotor) and a despun platform, as shown schematically in the figure. (Most of the despun section is actually inside the upper body.) A bearing and power transfer assembly (BAPTA) connects the 55 rpm spinning section to the despun platform and transfers power and signals across 26 slip rings.

Placing the spin axis normal to the orbit plane allows the rotation of the BAPTA to continuously point one side of the despun platform at Mars as the spacecraft orbits. (The "despun" platform actually rotates once per orbit in inertial space.) Mounting the instruments on this side of the platform gives them a clear view toward nadir.

This spacecraft orientation causes the sun to strike the spacecraft at angles from 45° to 67.5° from the spin axis. The design of the solar panel around the outside of the spinning body must accommodate the resulting loss of 8% to 29% of the solar intensity. Placing the spacecraft body on the sun side of the orbit plane shades the platform-mounted instruments.

A two-axis positioner points the high gain antenna at the Earth, as shown in the figure. The gimbals move continuously during the orbit.

SELECTED CLIMATOLOGY CONFIGURATION

HUGHES

- SPIN AXIS ORIENTATION PROVIDES NADIR TRACKING
- SOLAR ARRAY DESIGNED TO OPERATE WITH VARYING SUN ANGLE
- SPIN AXIS DIRECTION SHADES INSTRUMENTS
- 2 AXIS POSITIONER AIMS HGA AT EARTH, WHICH IS WITHIN 36° OF THE SUN LINE

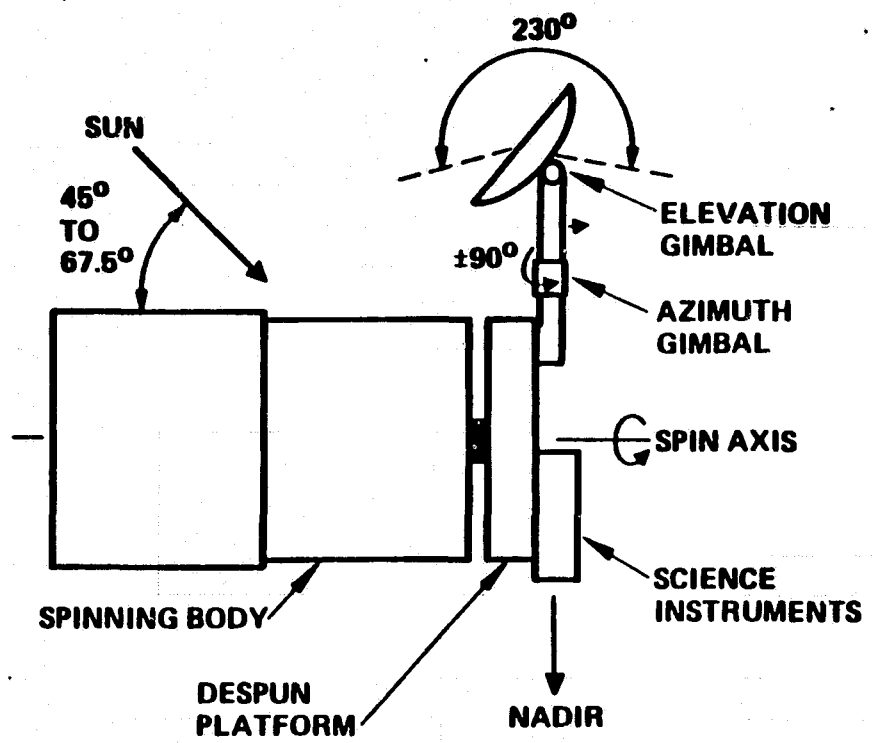

ORIGINAL PAGE IS OF POOR QUALITY

826514–7

AERONOMY SCIENCE INSTRUMENT REQUIREMENTS

Five of the nine aeronomy instruments must point in or relative to the velocity direction (ram) at periapsis; the others have no pointing requirement. The precession of the line of nodes and the simultaneous rotation of periapsis means the instruments do not point in any fixed direction relative to the planet or inertial space. The motion of the orbit plane about the planet and Mars about the sun combine to cause a wide range of sun and Earth angles.

AERONOMY SCIENCE INSTRUMENT REQUIREMENTS

HUGHES

- INSTRUMENTS POINT IN VELOCITY DIRECTION AT PERIAPSIS
- NEAR-POLAR ORBIT
- ANY SUN ANGLE ALLOWABLE

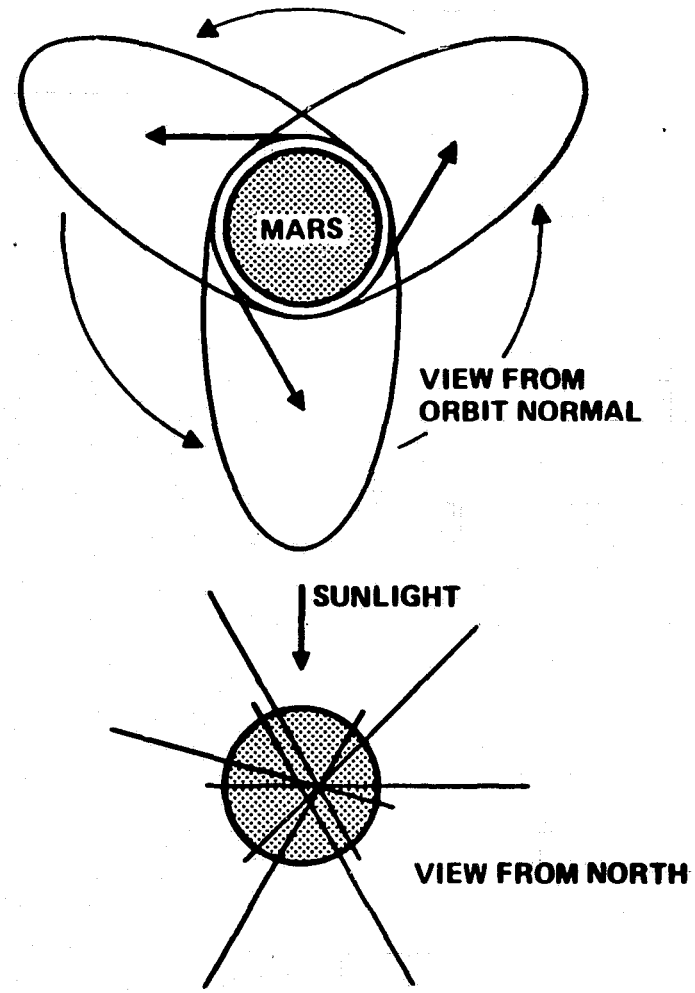

826514-6

ORIGINAL PAGE IS
OF POOR QUALITY

SELECTED AERONOMY CONFIGURATION

The aeronomy instrument pointing requirements do not favor a unique spacecraft attitude. The engineering requirements favor placement of the spin axis normal to Mars' orbit plane. This attitude allows normal solar incidence and maximum spacecraft power. The HGA elevation positioner requires less than 9° of travel and the azimuth positioner steps at 1.5° per day or less.

Three motions allow the spacecraft to point the five ram-oriented instruments at the desired direction, regardless of the orbit geometry. These five instruments mount on a shelf on the top of the despun platform. A positioner adjusts the shelf elevation to any angle between 0° and 90° from the spin axis. This motion accounts primarily for the latitude of periapsis. The second motion, pointing the despun platform to any azimuth angle, completes the coverage of one hemisphere. Slews of the despun platform allow the shelf positioner to repoint the instruments when periapsis crosses Mars orbit plane. Flipping the spacecraft five times during the full 2 Mars year mission covers the other hemisphere. The flipping occurs when the periapsis reaches maximum and minimum latitude. Because periapsis moves about half a degree per day, azimuth and elevation motions are very slow. The spacecraft stored command logic nominally adjusts the ram-oriented shelf positioner and the despun platform azimuth once per orbit to keep the instruments pointed in the velocity direction at periapsis.

SELECTED AERONOMY CONFIGURATION

HUGHES

- SPIN AXIS NORMAL TO MARS ORBITAL PLANE
  - PROVIDES MAXIMUM POWER
  - RESTRICTS EARTH ELEVATION TO ±4½°
  - EARTH AZIMUTH IS ±180°
  - 2-AXIS POSITIONER AIMS HGA AT EARTH
- SPACECRAFT CONFIGURATION PROVIDES 4π SR INSTRUMENT POINTING AS PERIAPSIS ROTATES
  - RAM-ORIENTED SHELF MOVES 0 TO 90° IN ELEVATION
  - AZIMUTH POSITION OF DESPUN SHELF PROVIDES CLOCK ANGLE
  - INVERTING SPACECRAFT (~ TWICE PER MARS YR) ALLOWS POINTING IN OTHER HEMISPHERE

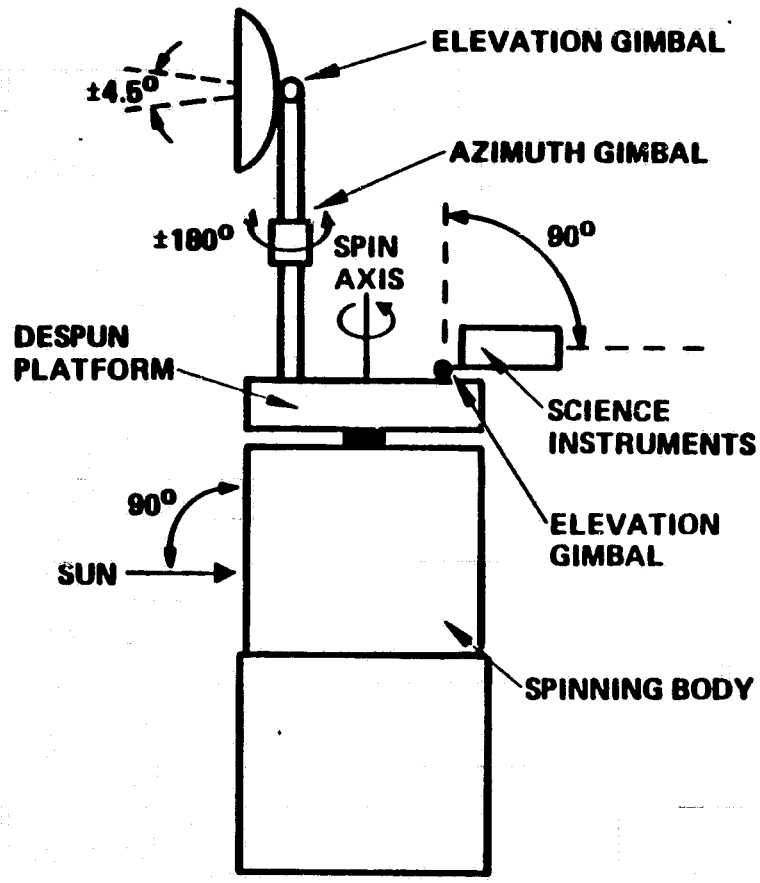

ORIGINAL PAGE IS OF POOR QUALITY

826514–12

RAM POINTING OF AERONOMY INSTRUMENTS

A combination of instrument shelf elevation, despun platform azimuth, and spin axis direction keeps the five ram-oriented instruments pointed in the velocity direction at periapsis. Starting with periapsis at 49° south, the ram-oriented shelf elevation decreases as the latitude of periapsis rotates toward the south pole. Slight azimuth adjustments of the despun platform compensate for the non-polar orbit inclination. At minimum latitude, inverting the spacecraft points the instruments toward the south. The shelf elevation angle increases (coupled with azimuth adjustment) as periapsis rotates north toward the Mars orbit plane crossing. There the despun platform slews so shelf elevation again decreases as periapsis moves further north. At maximum latitude the spacecraft flips again followed by another despun platform slew at Mars orbit crossing. These motions repeat as periapsis continues its rotation cycle.

In this manner, slow motions in shelf elevation and despun platform azimuth, and two 180° reorientations per Mars year (five in 2 Mars years), control instrument pointing.

RAM POINTING OF AERONOMY INSTRUMENTS

HUGHES

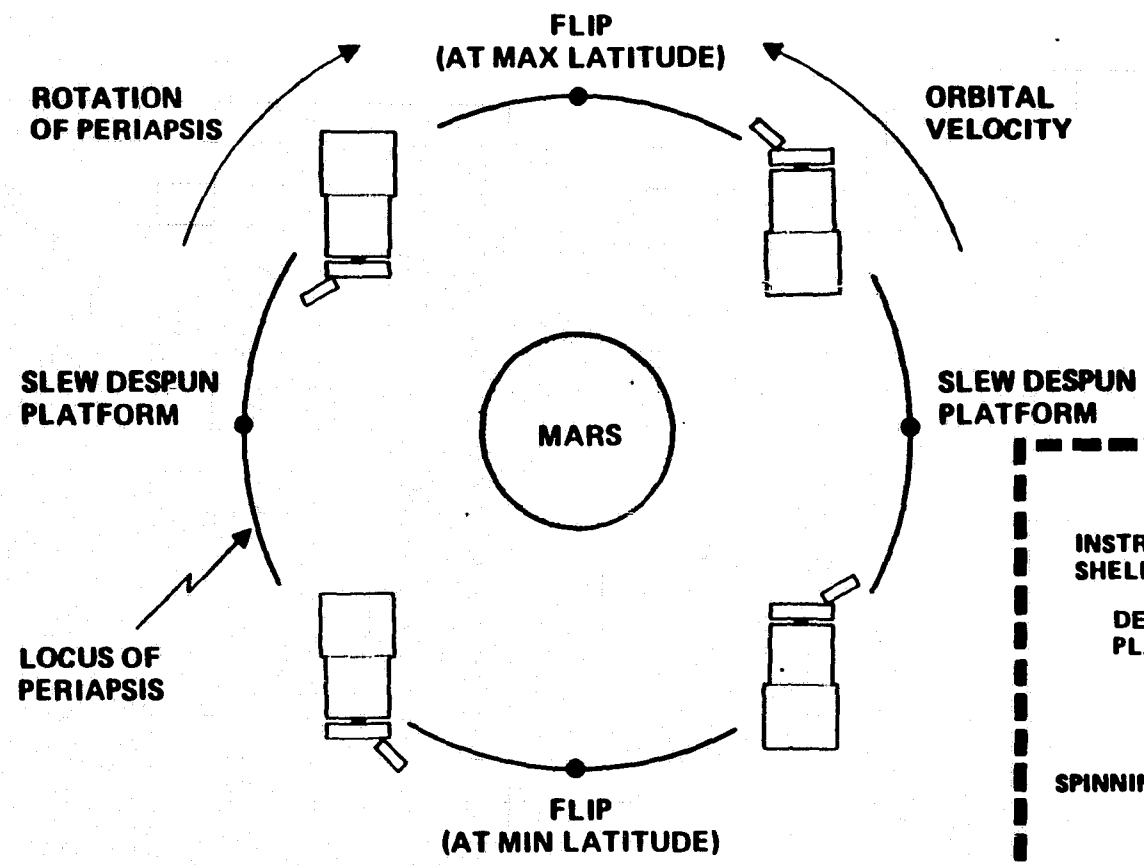

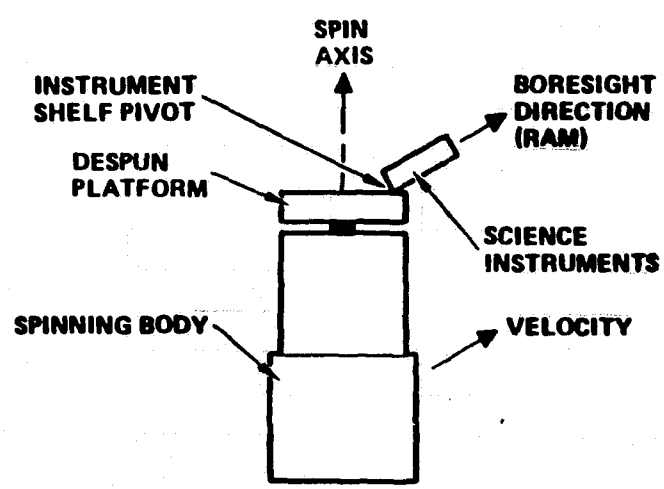

INSTRUMENT SHELF
REPOSITIONED ONCE PER ORBIT

826514–31

ORIGINAL PAGE IS
OF POOR QUALITY

CLIMATOLOGY ORBITER STOWED CONFIGURATION

The climatology orbiter stows for launch much like the HS-376 communications satellites. The cylindrical solar panel telescopes to reduce stack length. Cutouts in the outer panel provide a view for the sun and horizon sensors and clearance for the lateral thrusters. The HGA mast and GRS boom fold across the despun platform and lock to the composite X-beam. This beam also supports the fixed equpiment shelf carrying the PMR and FIS instruments and the star trackers. As shown, the omni and bicone antenna mast deploys after injection.

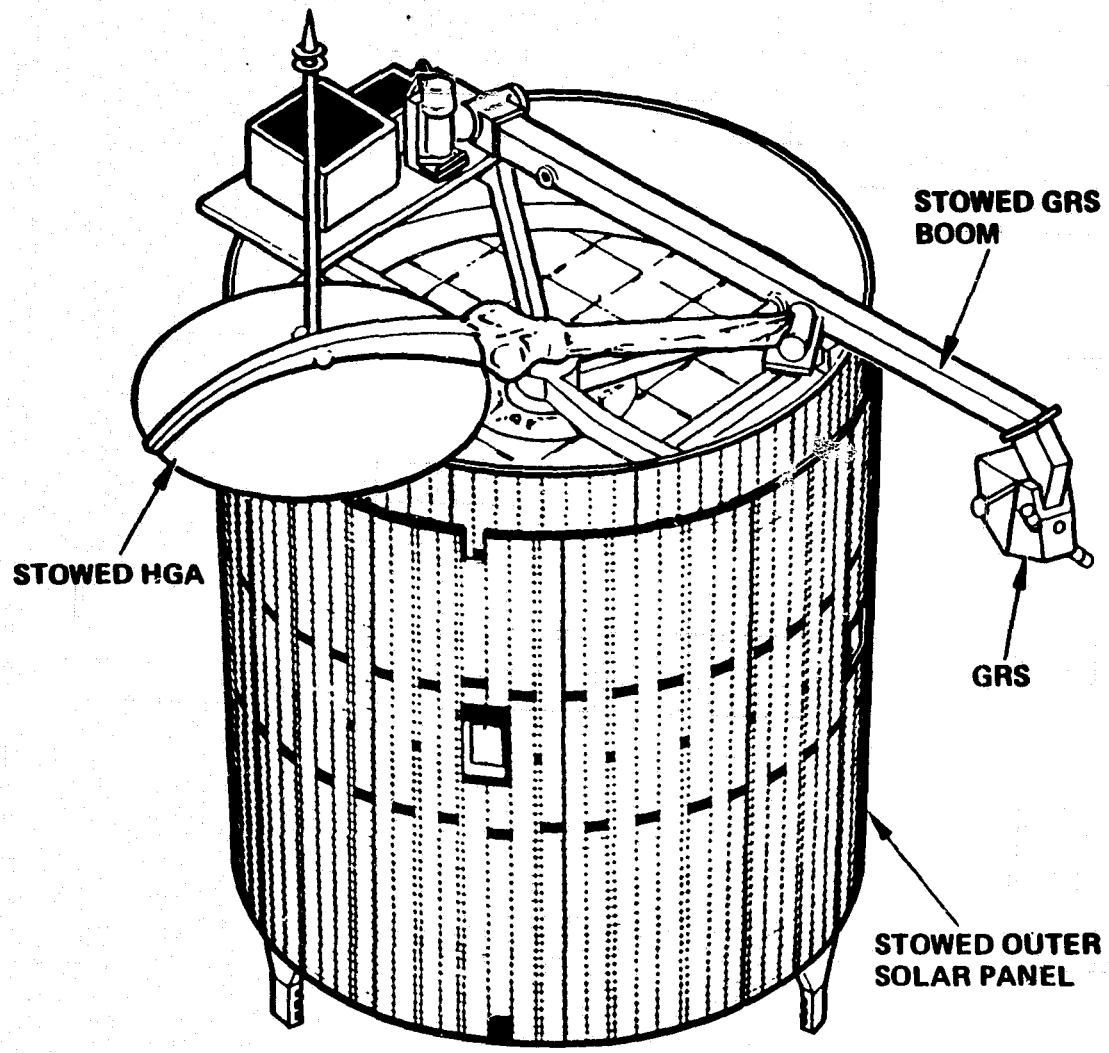

HUGHES

CLIMATOLOGY ORBITER—STOWED CONFIGURATION

OMNI DEPLOYED FOR CRUISE

ORIGINAL PAGE IS
OF POOR QUALITY

826514–21

CLIMATOLOGY STOWED CONFIGURATION CUTAWAY

The cutaway reveals the dual load path structure of the HS-376: struts, launch locks and bipods carry the outer loads while the thrust cone, BAPTA cone, and BAPTA form the inner load path. The internal despun equipment shelf holds the communications, data handling, and command equipment. The X-beam supports the science instruments and antennas, replacing the Y-beam antenna and feed support of the HS-376.

For the climatology mission, a STAR-31 Mars orbit insertion (MOI) motor replaces the shorter STAR-30B carried by other HS-376s and the aeronomy orbiter. A tapered adapter holds the new motor at its aft end and attaches it to the HS-376 perigee stage interface ring at the base of the thrust cone. The stack allows minimum clearance between the injection motor and the STAR-31 nozzle. The integrated propulsion stage adapter attaches to the aft end of the STAR-31 adapter. This configuration carries the weight of the MOI motor directly on the injection stage adapter and brings MOI loads through structure designed for the HS-376's PAM-D perigee stage. Both orbiters retain their motor cases after MOI.

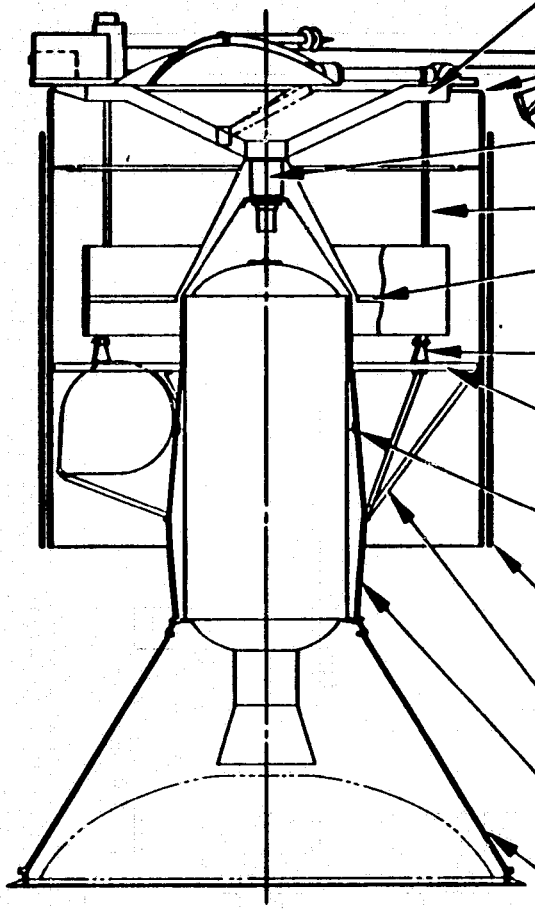

SEPARABLE GRAPHITE X-BEAM SCIENCE AND ANTENNA SUPPORT

KEVLAR/EPOXY SOLAR PANEL SUBSTRATE FACESHEETS

BAPTA WITHSTANDS BENDING MOMENTS DURING MOI

BIPODS

ALUMINUM DESPUN EQUIPMENT SHELF AND BAPTA CONE

LAUNCH LOCKS FREE DESPUN PLATFORM

ALUMINUM SPINNING EQUIPMENT SHELF AND TANK SUPPORT

THRUST CONE PROVIDES INNER LOAD PATH

OUTER SOLAR PANEL EXTENDS AND PROVIDES ON-ORBIT DYNAMIC BALANCE

STRUTS PROVIDE OUTER LOAD PATH

MOI MOTOR ADAPTER

INTEGRATED PROPULSION STAGE ADAPTER TAKES MOI MOTOR LAUNCH LOADS

HUGHES

CLIMATOLOGY STOWED CONFIGURATION CUTAWAY

ORIGINAL PAGE IS OF POOR QUALITY

826514–14

CLIMATOLOGY ORBITER DEPLOYED CONFIGURATION

Pin pullers deploy the climatology orbiter omni/bicone antenna mast 90° and bolt cutters unlock its despun platform during gyrostat-stabilized cruise. Only the outer solar panel powers the spacecraft.

Once in Mars orbit, both the GRS boom and the HGA mast deploy with simple, one-step viscous damper mechanisms. A second pin puller allows the omni/bicone mast to reach its fully deployed position. Finally, three redundant stepper motors extend the outer solar panel, tilting it slightly after all deployents are completed to perfect the balance. The deployed boom holds the GRS more than one spacecraft diameter away from the spacecraft body to avoid contamination. The BAPTA orients the despun platform so the instrument boresights point toward Mars throughout the mission. The HGA mast deploys 180° so the antenna can look back along the spacecraft at Earth.

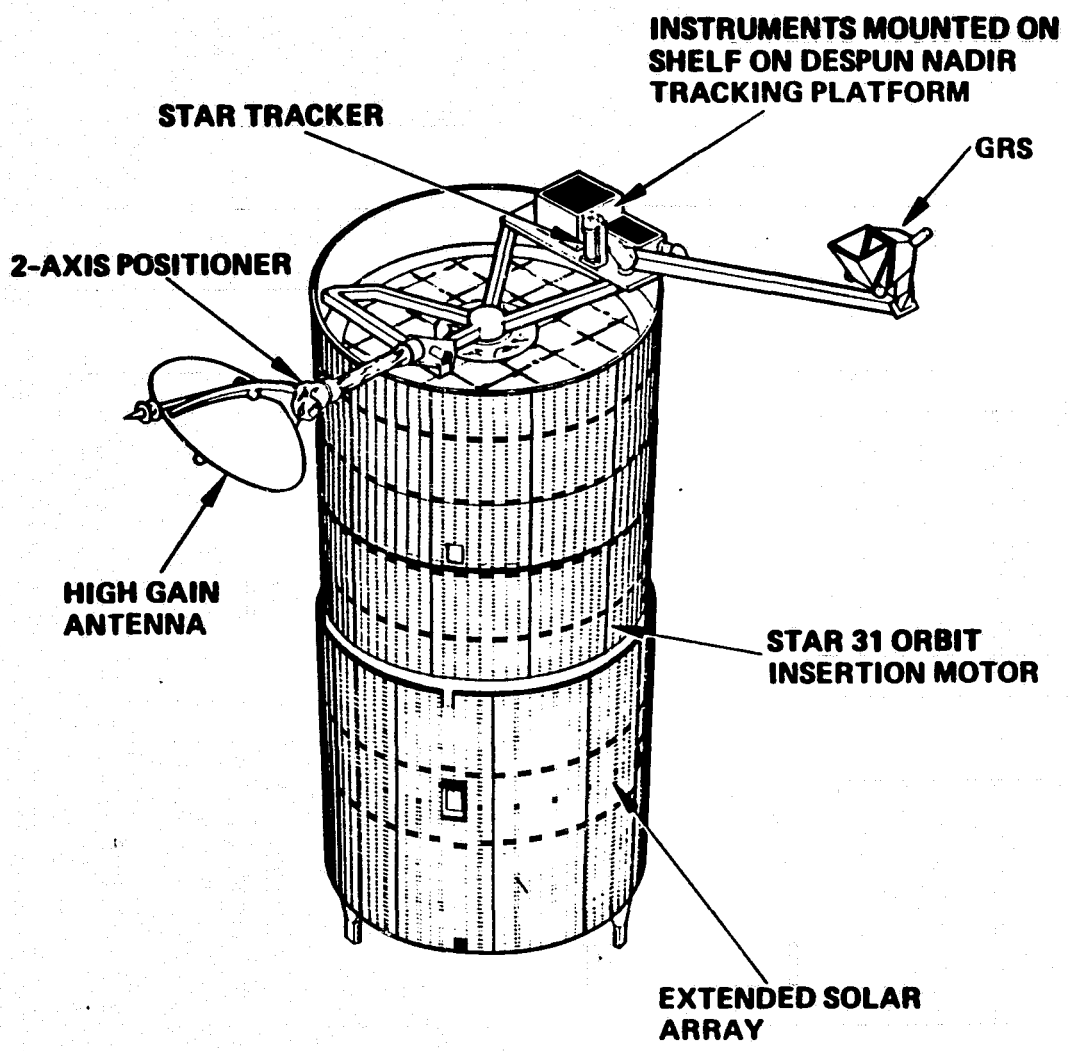

HUGHES

CLIMATOLOGY ORBITER — DEPLOYED CONFIGURATION

ORIGINAL PAGE IS OF POOR QUALITY

826514–22

CLIMATOLOGY ORBITER DESPUN SECTION

This engineering drawing more clearly shows the location of the nadir-oriented science shelf, the GRS boom, and the high gain antenna. It also illustrates the X-beam structure and BAPTA interface. The star tracker attaches to the science shelf to minimize alignment errors when determining instrument attitude.

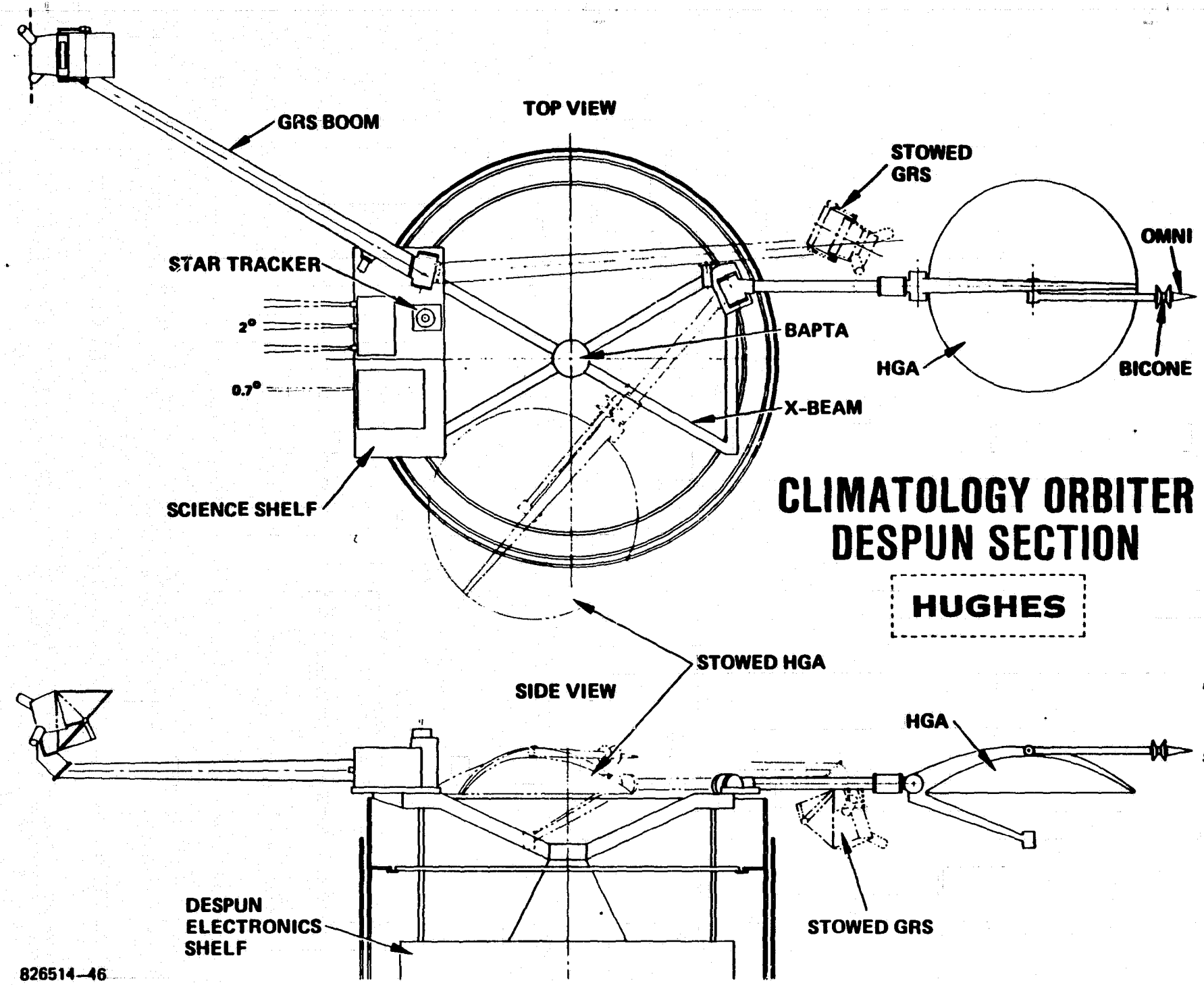

CLIMATOLOGY ORBITER DESPUN SECTION

HUGHES

ORIGINAL PAGE IS OF POOR QUALITY

AERONOMY ORBITER - STOWED CONFIGURATION

The aeronomy orbiter stows for launch in the same way as the climatology orbiter, with the solar panel telescoped and the HGA mast folded across the despun platform. The ram-oriented shelf locks in its 90° elevation position. The Astromast magnetometer boom collapses into its can, which mounts on the X-beam opposite the ram-oriented shelf. As shown, the omni/bicone antennas deploy during cruise.

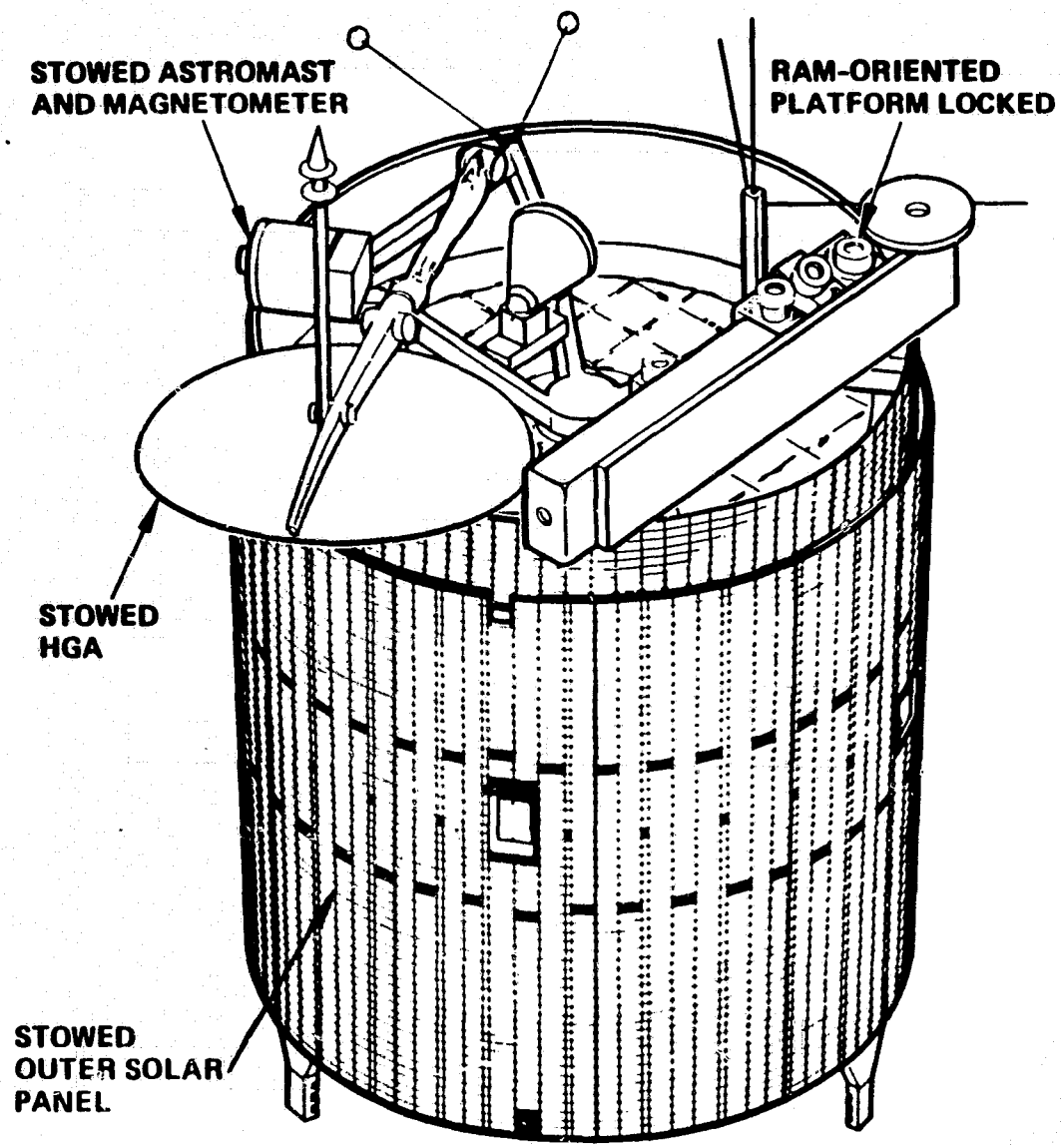

HUGHES

ORIGINAL PAGE IS
OF POOR QUALITY

AERONOMY ORBITER — STOWED CONFIGURATION

OMNI DEPLOYED FOR CRUISE

826514–19

AERONOMY ORBITER DEPLOYED CONFIGURATION

Retaining the HS-376 STAR-30B solid motor makes the aeronomy orbiter spin stable during cruise. The launch locks remain connected and the platform spins with the rest of the spacecraft. Two-way communications use the deployed omni and bicone antennas. A star scanner and sun sensor provide the attitude references.

Once in orbit, the launch locks release, the BAPTA despins the platform, the antennas deploy, and the spacecraft becomes a gyrostat. Three solar drum positioners extend the aft array. The Astromast extends out of its can, placing the magnetometer sensors more than 6 meters from the spacecraft. The shelf positioner correctly points the ram-oriented instruments. A star tracker gives accurate attitude fixes on-orbit.

The cutaway shows the location of the Mars Orbiter subsystems. Attitude control, power and propulsion occupy the spun section; the communications, data handling, and command equipment mounts on the despun equipment shelf. All structure below the BAPTA except for the STAR-31 motor mounting ring is unchanged from HS-376; the structure to support the antenna and instruments is new.

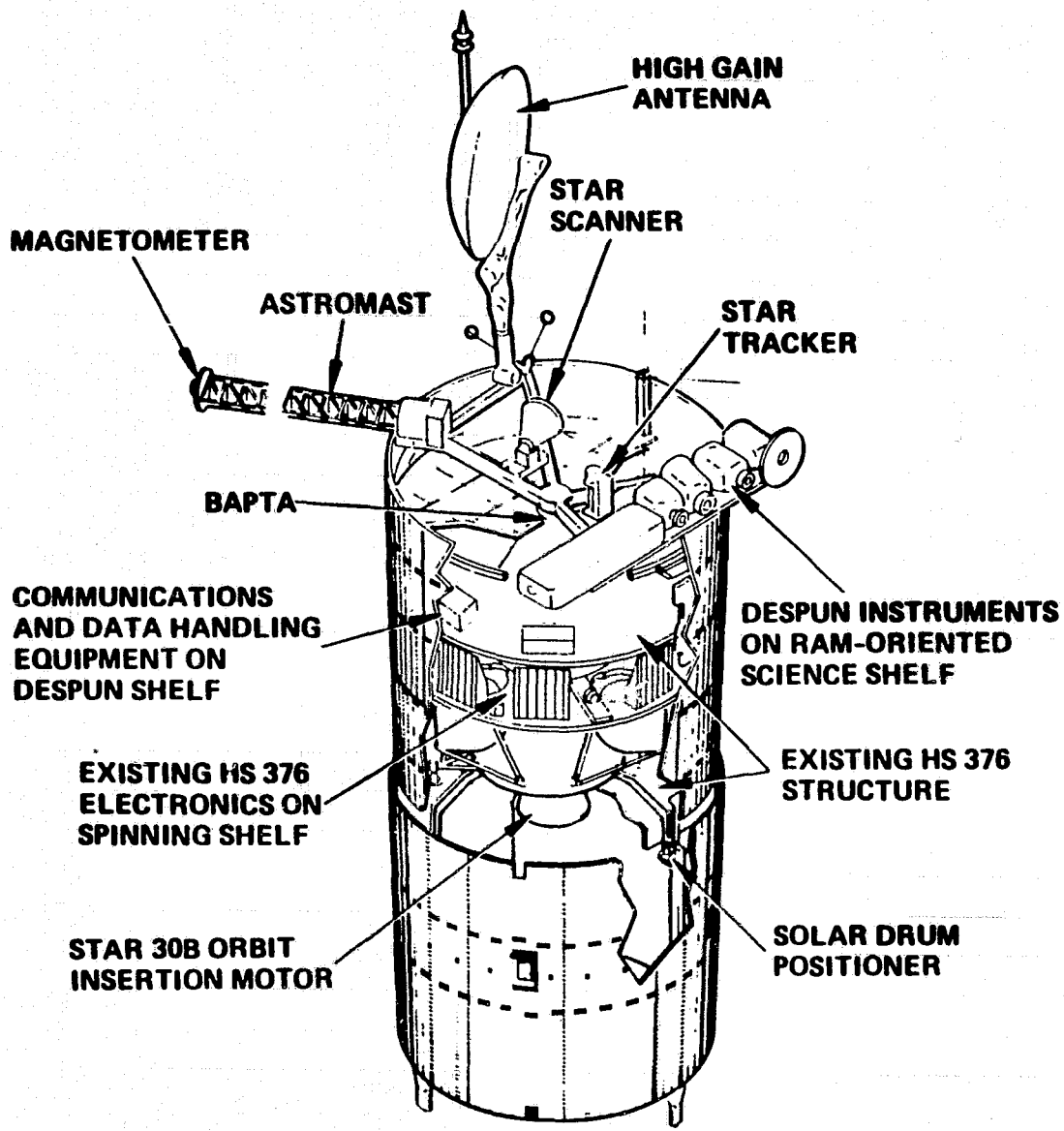

HUGHES

AERONOMY ORBITER — DEPLOYED CONFIGURATION

826514–23

ORIGINAL PAGE IS OF POOR QUALITY

AERONOMY ORBITER DESPUN SECTION

The top and side view drawings show the ram-oriented shelf at 0 and 90° elevation. Other instruments attach to the opposite ends of the X-beam or a side support tower. All instruments have their required pointing and fields of view. The antenna mast locks into place parallel to the spin axis on top of the X-beam. The star tracker and star scanner also mount to the rigid X-beam to minimize alignment errors.

For reference, the dashed line shows the Shuttle payload envelope.

AERONOMY ORBITER DESPUN SECTION
TOP VIEW

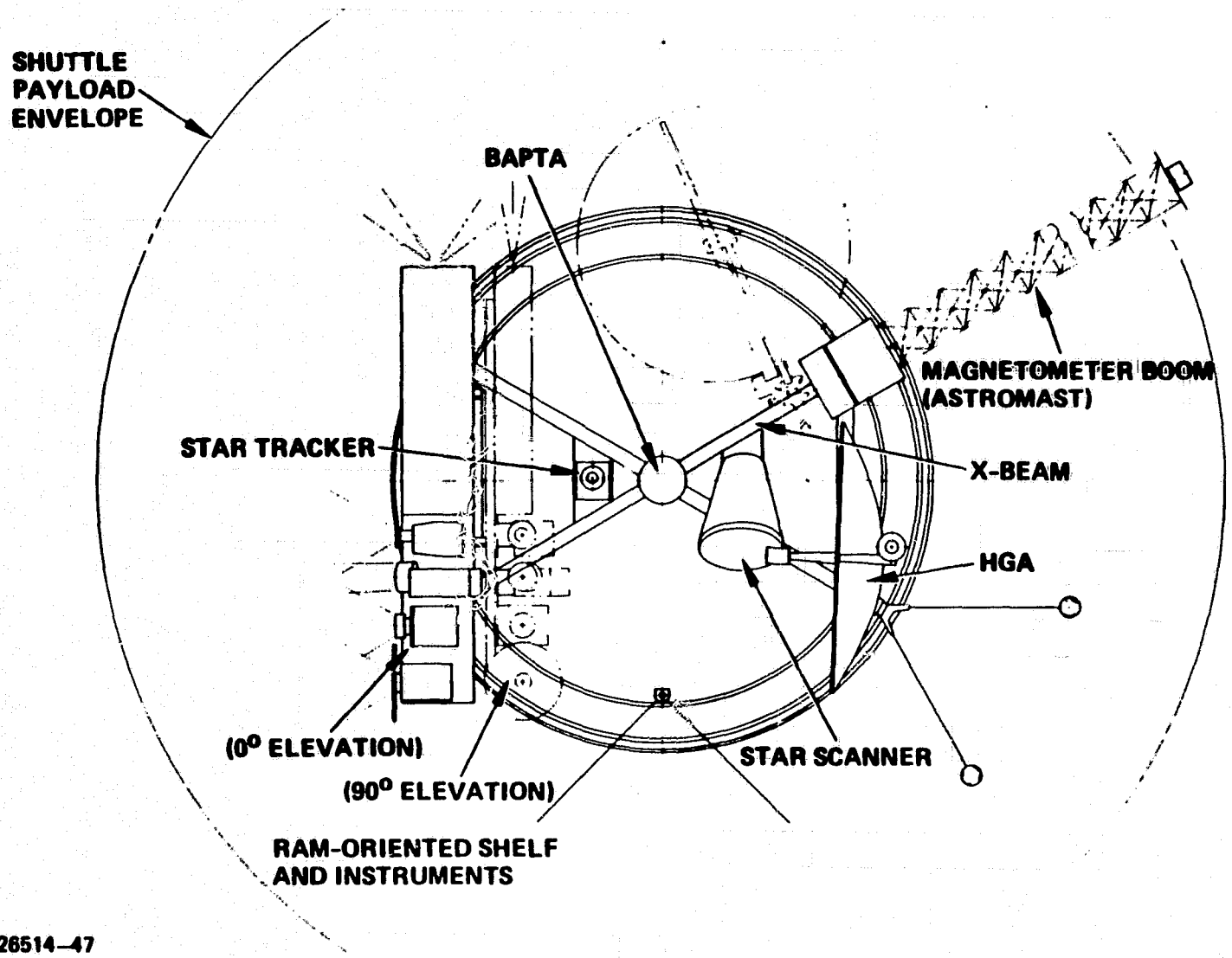

826514–47

ORIGINAL PAGE IS OF POOR QUALITY

AERONOMY ORBITER DESPUN SECTION
SIDE VIEW

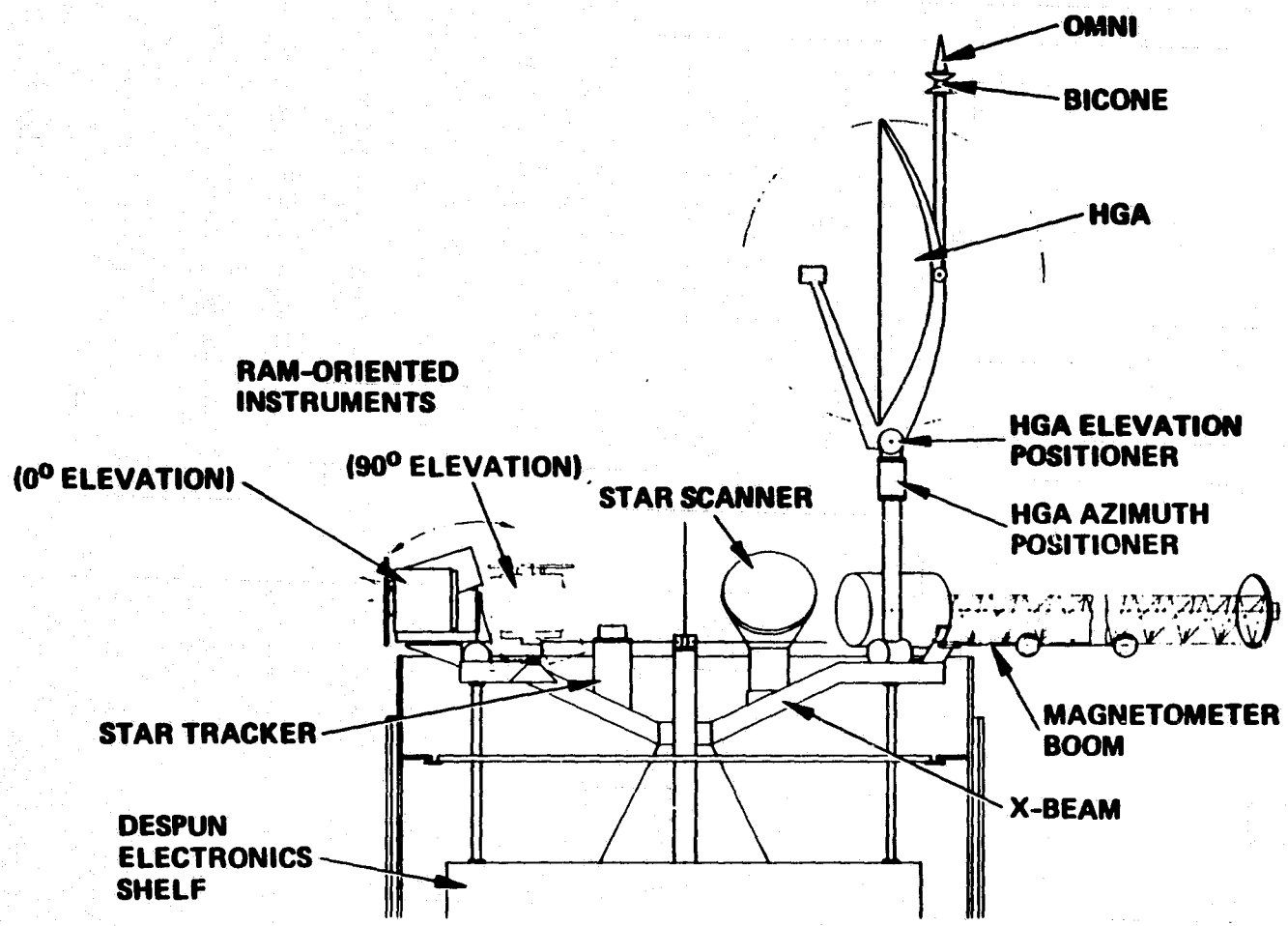

826514–48

PRECEDING PAGE BLANK NOT FILMED

ORIGINAL PAGE IS OF POOR QUALITY

KEY FEATURES

The Mars Orbiters feature fully-redundant, nearly-common designs with minimum departure from the HS-376 configuration and maximum use of developed and available units. The integrated propulsion stage, with its offloaded SRM-1 motor, injects either spacecraft to Mars. The aeronomy orbiter is spin stable during cruise; the climatology orbiter is a gyrostat. Like HS-376, both orbiters operate on orbit as gyrostats with active nutation damping by torquing the despun platform. The larger STAR-31 motor case make the climatology orbiter about 43 kg heavier than the aeronomy orbiter.

Except for the aeronomy SWPA, all science instruments attach to the despun platform. Most mount on an instrument shelf; this shelf points at nadir on the climatology mission and into the velocity direction at periapsis on the aeronomy mission. All instruments have their required fields of view and pointing direction.

The structure subsystem retains the dual-load path HS-376 design. The only new structure supports the instruments, antenna, or the climatology orbiter's longer MOI motor.

Both orbiters use the same 20 watt, S- and X-band communications system. A 1.1 m high gain antenna permits a downlink data rate of 8192 bps on orbit. Omni and bicone antennas provide on-orbit uplink and cruise two-way communications.

Three Odetics 148.6 Mbit recorders allow simultaneous storage and playback of up to 32 hours of data, with one recorder for redundancy. The large storage capacity accommodates one eight-hour DSN pass per day and can tolerate one DSN station outage without loss of data. The data handling subsystem provides a total of 24 serial and 504 bilevel channels, all of them redundant.

KEY FEATURES

HUGHES
HUGHES AIRCRAFT COMPANY

FEATURE	CLIMATOLOGY ORBITER	AERONOMY ORBITER
SPACECRAFT		
Type	HS-376	Same
Attitude	Spin axis normal to orbit plane	Spin axis normal to Mars orbit plane
Stabilization		
Before SRM-1 separation	Active nutation control	Same
Cruise	Gyrostat with active nutation damping	Stable spinner
Mars Orbit	Gyrostat with active nutation damping	Same
Dry Mass (with contingency, but without reserve)	614 Kg	571 Kg
SCIENCE ACCOMMODATION		
Platform	Despun	Same (SWPA spinning)
Orientation	Nadir pointing	Ram pointing
Deployments	GRS boom	Magnetometer boom

ORIGINAL PAGE IS OF POOR QUALITY

The command subsystem supplies up to 20 serial and 436 redundant pulse commands in stored and real-time modes. Like the data handling subsystem, the same command subsystem flies on both orbiters.

The attitude control subsystem uses HS-376 components and the Intelsat VI attitude control electronics (ACE) to provide accurate attitude determination and flexible platform pointing for both Mars missions. Sun and platform-mounted star sensors provide an attitude fix throughout the mission. The ACE controls platform despin and pointing by using sun or Mars horizon references, or measuring the relative spin rate between the two parts of the spacecraft. It also limits nutation by active nutation control using thrusters (ANC) or by torquing the dynamically-imbalanced despun platform (DANDE). The space-proven bearing and power transfer assembly (BAPTA) couples and controls the relative spin of the spun and despun sections while its 26 slip rings carry signals and power across the rotating interface.

The 387-watt (worst case) main solar arrays power the climatology spacecraft. The aeronomy solar panel generates 467 watts with its normal sun angle. Two 19.5 amp hour batteries support eclipse operation of either spacecraft; battery depths of discharge remain low (<15.2%) throughout either mission.

The aeronomy orbiter retains the STAR-30B HS-376 solid motor for MOI; the climatology orbiter needs the longer STAR-31 (20% offload) to capture into the circular orbit. Both spacecraft carry the SBS-1A blowdown liquid system with 232 kg of usable bipropellant (236 kg total).

Both orbiters feature passive thermal control. Insulation added to the inside of the solar drum isolates the interior from the cold of deep space and the temperature transients of frequent eclipses.

The integrated propulsion stage (Intelsat VI perigee stage) injects either spacecraft into the trans-Mars trajectory. All stage structure and ASE is being developed for Intelsat VI. The spacecraft cantilevers off the stage in the Shuttle bay. "Frisbee" deployment ejects the spacecraft/stage stack sideways with about a 2 rpm roll rate. Two STAR-6 motors increase the spin rate to 30 rpm for coast and injection burn. Offloading the SRM-1 reduces Shuttle launch cost.

ORIGINAL PAGE IS
OF POOR QUALITY

KEY FEATURES (cont'd)

FEATURE	CLIMATOLOGY ORBITER	AERONOMY ORBITER
SUBSYSTEMS		
STRUCTURE		
Design	HS-376, dual load path	Same
Instrument Mounting	Despun platform	Same with ram-oriented shelf (SWPA spinning)
COMMUNICATIONS		
Power, X-band/S-band	20 W/20 W	Same
Antennas	Despun HGA with dual gimbal, omni, bicone	Same
Data Rate	8192 bps	Same
DATA HANDLING		
Storage	148.6 Mbits	Same
Rate	8 to 8192 bps	Same
Serial Data Channels	4 redundant spun; 20 redundant despun	Same
Analog/Bilevel Data Channels	252 redundant spun; 252 redundant despun	Same
COMMAND		
Serial Commands	8 redundant spun; 12 redundant despun	Same
Pulse Commands	256 redundant spun; 180 redundant despun	Same
Modes	Stored and real-time	Same

ORIGINAL PAGE IS OF POOR QUALITY

KEY FEATURES (cont'd)

FEATURE	CLIMATOLOGY ORBITER	AERONOMY ORBITER
ATTITUDE CONTROL		
Attitude Sensors	Sun, star, horizon sensors	Same + spinning star sensor
On-Orbit Modes	Rate hold, Mars horizon sensor, sun sensor	Same
Nutation Damping	Thrusters or despun platform torquing	Same
BAPTA	HS-376/LEASAT redundant, 26 slip rings	Same
POWER		
Main Array Power (worst case)	387 W	467 W
Batteries	2 Westar Ni-Cd	Same
Capacity	19.5 A-Hr each	Same
Depth of Discharge	9.5%	0 - 15.2%
PROPULSION		
MOI Motor	Star-31 (20% offload)	Star-30B
Liquid Propellant (usable)	232 Kg bipropellant	Same
Thrusters	2 axial, 4 radial/spin	Same
THERMAL CONTROL	Passive	Same

ORIGINAL PAGE IS OF POOR QUALITY

KEY FEATURES (Cont'd)

FEATURE	CLIMATOLOGY ORBITER	AERONOMY ORBITER
INJECTION STAGE		
Type	Integrated Propulsion Stage	Same
Motor	CSD SRM-1 (7756 kg propellant)	Same (6178 kg propellant)
Deployment	"Frisbee," 2 rpm	Same
Spin Motors	2 Star-6	Same

ORIGINAL PAGE IS OF POOR QUALITY

SUBSYSTEM MASS AND HERITAGE SUMMARY

The table defines categories of spacecraft hardware which relate to the amount of development required for Mars Orbiter. The first three categories require no development, but are divided due to the different allocation for mass uncertainty. As shown, currently available HS 376 units have 1% mass uncertainty to allow for manufacturing tolerances. The slightly higher 2% value allocated to other currently available units reflects the fewer number of previously constructed units and therefore smaller data base for the mass estimate. Units currently in development are allocated 10% mass uncertainty.

Modified units which require some changes specifically for Mars Orbiter are given 10% uncertainty on the basis of the entire unit mass. Uncertainty in the estimates of the modified portions can therefore exceed 10%.

New units, which require development and qualification for Mars Orbiter are allocated 20% mass uncertainty.

SUBSYSTEM MASS AND HERITAGE SUMMARY

HERITAGE DEFINITIONS

HUGHES

HARDWARE CATEGORY	DEFINITION	ALLOCATED MASS UNCERTAINTY, %
EXISTING, HS 376	DEVELOPED AND CURRENTLY AVAILABLE	1
EXISTING, OTHER	DEVELOPED AND CURRENTLY AVAILABLE	2
IN DEVELOPMENT	UNDER CONTRACT, WILL BE COMPLETED IN TIME FOR MARS ORBITER	10
MODIFIED	EXISTING BUT REQUIRES ADDITIONAL OR REPLACEMENT CIRCUITS OR FUNCTIONS (TYPICALLY LESS THAN 20% MODIFIED) QUALIFICATION REQUIRED	10
NEW	DEVELOPMENT AND QUALIFICATION REQUIRED	20

826514–74

CLIMATOLOGY ORBITER MASS SUMMARY

The table summarizes the climatology orbiter mass. All subsystem components are divided into four categories: existing HS-376, existing from other spacecraft, modified or unmodified but under development (Intelsat VI, SBS 1A) or new parts. These divisions carry 1%, 2%, 10% and 20% contingency, respectively. Most of the new component mass is the structure to mount the STAR-31 MOI motor or support the science instruments. A 15% contingency buffers the 37 kg instrument mass specification, leading to a spacecraft total of 614.1 kg. Designing the mission for a 650 kg dry mass leaves a 35.9 kg unallocated reserve plus the 31.7 kg calculated contingency.

CLIMATOLOGY ORBITER MASS SUMMARY

HUGHES

SUBSYSTEM	MASS, KG				
	TOTAL	HS 376	EXISTING	IN DEVELOPMENT/ MODIFIED	NEW
STRUCTURE	147.9	93.4	0.3	10.9	43.2*
HARNESS	25.2	3.1	0.0	13.2	8.9*
COMMUNICATIONS	27.0	0.0	12.7	10.3	4.0*
DATA HANDLING	41.6	0.0	6.3	35.4	0.0
COMMAND	40.5	0.0	3.6	34.4	2.5
ATTITUDE CONTROL	43.4	12.0	16.1	11.8	3.5
POWER	93.3	91.3	2.1	0.0	0.0
PROPULSION	22.6	0.8	4.2	17.6	0.0
THERMAL CONTROL	20.3	11.5	0.0	3.7	5.0*
BALANCE MASS	4.4	4.4	0.0	0.0	0.0
SOLID MOTOR CASE	73.6	0.0	73.6	0.0	0.0
TOTAL	539.9	216.5	118.9	137.3	67.0
CONTINGENCY	31.7	2.2 (1%)	2.4 (2%)	13.7 (10%)	13.4 (20%)
BUS TOTAL	571.5				
SCIENCE	37.0				
SCIENCE CONTINGENCY (15%)	5.5				
SPACECRAFT TOTAL	614.1				
MASS RESERVE	35.9				
DESIGN MASS	650.0				

*NO ELECTRONIC PARTS

826514–75

ORIGINAL PAGE IS OF POOR QUALITY

AERONOMY ORBITER MASS SUMMARY

The aeronomy orbiter weighs about 43 kg less than the climatology orbiter because of the lighter STAR-30B motor case and mount. The magnetometer boom is included in the structure mass, not with the instruments. The 53.8 kg science mass includes an extra magnetometer and ETP sensor to compensate for the despun sensor mounting. The spacecraft total of 570.8 kg and design mass of 600 kg leave a reserve of 31 kg plus 29.2 kg of calculated contingency.

AERONOMY ORBITER MASS SUMMARY

HUGHES

SUBSYSTEM	MASS, KG				
	TOTAL	HS 376	EXISTING	IN DEVELOPMENT/ MODIFIED	NEW
STRUCTURE	129.5	95.3	7.8	8.8	17.6*
HARNESS	26.3	3.1	0.0	13.2	10.0*
COMMUNICATIONS	27.0	0.0	12.7	10.3	4.0*
DATA HANDLING	41.6	0.0	6.3	35.4	0.0
COMMAND	40.5	0.0	3.6	34.4	2.5
ATTITUDE CONTROL	49.9	15.8	18.8	11.8	3.5
POWER	93.3	91.3	2.1	0.0	0.0
PROPULSION	22.6	0.8	4.2	17.6	0.0
THERMAL CONTROL	18.8	12.8	0.0	0.0	6.0*
BALANCE MASS	4.4	4.4	0.0	0.0	0.0
SOLID MOTOR CASE	29.4	29.4	0.0	0.0	0.0
TOTAL	483.5	252.9	55.6	131.5	43.6
CONTINGENCY	25.5	2.5 (1%)	1.1 (2%)	13.2 (10%)	8.7 (20%)
BUS TOTAL	509.0				
SCIENCE	53.8				
SCIENCE CONTINGENCY (15%)	8.1				
SPACECRAFT TOTAL	570.8				
MASS RESERVE	29.2				
DESIGN MASS	600.0				

*NO ELECTRONIC PARTS

826514–76

ORIGINAL PAGE IS OF POOR QUALITY

DEGREE OF DESIGN HERITAGE

The Mars Orbiter elements, described in more detail in the following sections, have a high degree of design heritage. The table quantifies this in three ways: First, the number of electronic units is divided according to the existing, modified, and new categories previously defined. The second breakdown considers unit types. For example, the two X-band TWTA's represent 2 units and 1 unit type. The third breakdown considers mass and, unlike the first two breakdowns, adds the structure, harness, and thermal control elements.

As shown, the existing hardware represents over 72% of the spacecraft; and new hardware is only 12% by mass or 5% by number of units.

DEGREE OF DESIGN HERITAGE

HUGHES

	CLIMATOLOGY (WORST CASE)	
• NO. OF UNITS		
EXISTING	41	(72%)
MODIFIED	13	(23%)
NEW	3	(5%)
TOTAL	57	
• UNIT TYPES		
EXISTING	26	(79%)
MODIFIED	5	(15%)
NEW	2	(6%)
TOTAL	33	
• MASS		
EXISTING – MEASURED	334	(72%)
EXISTING – UNDER DEVELOPMENT	52	
MODIFIED	85	(16%)
NEW	67	(12%)
TOTAL	538 KG	

NOTE: STRUCTURE, HARNESS, AND THERMAL CONTROL ELEMENTS INCLUDED IN MASS BUT NOT IN UNITS OR UNIT TYPES

ORIGINAL PAGE IS OF POOR QUALITY

826514–77

POWER BUDGET

The aeronomy and climatology spacecraft engineering loads are identical: 199.6 watts in daylight and 134.2 watts in eclipse, including 10% contingency. However, the climatology science instruments require more power than the aeronomy payload. The short climatology orbit also forces the panel to provide a high current to charge the batteries before the next eclipse. The corresponding large boost array area combined with the oblique sun angle limit the worst case main array output of the 8.9 m^2 (cross-section) panels to 387.2 watts. This leaves 27.6 watt reserve and degradation allowance above the 10% contingency. The 467 watt aeronomy main array output has a 75% reserve and degradation allowance above the calculated requirements.

The power subsystem section provides more detail on the power budget and array design.

POWER BUDGET, WATTS

HUGHES

SUBSYSTEM	POWER, W			
	CLIMATOLOGY		AERONOMY	
	DAYLIGHT	ECLIPSE	DAYLIGHT	ECLIPSE
COMMUNICATIONS	76.1	25.2	76.1	25.2
DATA HANDLING	45.5	25.5	45.5	25.5
COMMAND	15.0	15.0	15.0	15.0
ATTITUDE CONTROL	33.0	33.0	33.0	33.0
POWER	1.9	3.3	1.9	3.3
THERMAL CONTROL	10.0	20.0	10.0	20.0
TOTAL	181.5	122.0	181.5	122.0
CONTINGENCY (10%)	18.1	12.2	18.1	12.2
BUS TOTAL	199.6	134.2	199.6	134.2
SCIENCE	59.0	55.0	46.5*	21.3*
BATTERY CHARGE (MAIN ARRAY)	101.0	–	37.7	–
SPACECRAFT TOTAL	360.6	184.5	283.8	155.5
MIN MAIN ARRAY OUTPUT AT 28 V	387.2	–	467.0	–
POWER RESERVE/DEGRADATION ALLOWANCE	27.6	–	183.2	–
BATTERY DOD	–	9.5%	–	0 TO 15.2%

*MAX POWER WITH PERIAPSIS IN DAYLIGHT, 90 MIN ECLIPSE

ORIGINAL PAGE IS OF POOR QUALITY

826514-101

POWER VARIATION DURING THE CLIMATOLOGY MISSION

The power budget on the preceeding page assumes a panel output at the worst-case solar incidence (1.65 AU, 35° sun angle from the orbit plane) in the sun-synchronous mission. At other times the 28 watt power reserve grows to as much as 240 watts, as shown in the figure. Just after circularization, the poor (7:45 a.m.) sun angle prevents full spacecraft operation, but the science instruments can collect data during part of each orbit. Full operation can begin after 20 days of drift (8:40 a.m.) then continue for the rest of the drift period and at all mission sun angles and distances.

ADDITIONAL POWER MARGIN AVAILABLE THROUGHOUT MARS YEAR

HUGHES

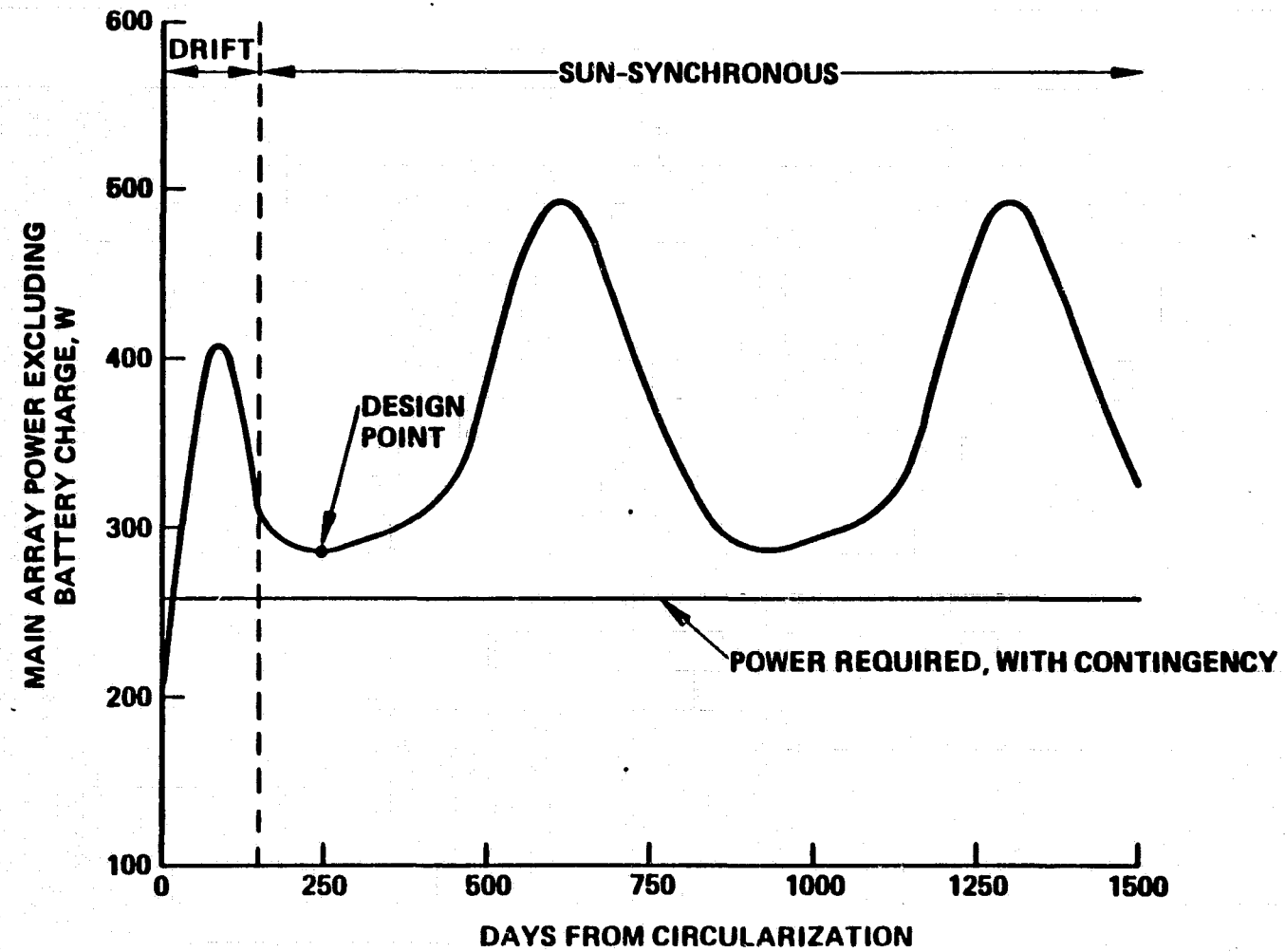

826514–70

ORIGINAL PAGE IS OF POOR QUALITY

PERFORMANCE MARGINS

Adequate performance margins help reduce development cost. Instrument or mission changes do not then require significant spacecraft design changes. The mass and power budgets just presented have margin beyond the allocated contingency. All solid motors have substantial margin. By loading additional propellant, the SRM-1 injection motor provides up to 21% more performance for the climatology mission or 37% for the aeronomy mission. Pointing the STAR 31 or STAR 30B closer to the optimum orbit insertion geometry places additional dry mass into Mars orbit. Also, the STAR 31 can be loaded with up to 20% more propellant. The bipropellant capacity performs the conservatively sized maneuvers for 2 Mars years including a 100 m sec planetary quarantine maneuver. Increasing the climatology mission drift time by 100 days achieves about 10% more capability. Larger bipropellant tanks can further increase performance to the limits of the solid motor capability.

HUGHES

PERFORMANCE MARGINS

- INTEGRATED PROPULSION STAGE SRM-1 MOTOR IS OFFLOADED 21% FOR CLIMATOLOGY AND 37% FOR AERONOMY

- MOI MOTORS (STAR-31 20% OFFLOAD OR STAR-30B FULLY LOADED) PROVIDE EXCESS CAPABILITY, EFFECTIVE ΔV ACHIEVED BY POINTING BIAS

- BIPROPELLANT SYSTEM PROVIDES CONSERVATIVELY SIZED MANEUVER CAPABILITY, INCLUDING PLANET PROTECTION ΔV AFTER 2 MARS YEARS

- ALL PERFORMANCE CALCULATIONS BASED ON CONSERVATIVELY ESTIMATED DRY MASS; RESERVE ADDED ON TOP OF ALLOCATED CONTINGENCY

826514–78

DESIGN SUMMARY

The Mars Orbiter deigns use an HS-376 dual-spin spacecraft bus with almost no changes to its spun section. Science instruments, a high gain antenna, and DSN-compatible communications, data handling, and command units replace the geostationary communications payload usually carried on the HS-376 despun platform. Both aeronomy and climatology orbiters satisfy all requirements of the science instruments and provide full redundancy throughout the design. The low-cost integrated propulsion stage, offloaded to reduce Shuttle launch costs, injects the spacecraft into the cruise trajectory. Ample mass and power margins tolerate design changes.

DESIGN SUMMARY

- HS-376 SPUN SECTION UNCHANGED
- HS-376 DESPUN SECTION CARRIES SCIENCE INSTRUMENTS, NEW DSN-COMPATIBLE COMMAND AND TELEMETRY EQUIPMENT
- SATISFIES SCIENCE REQUIREMENTS
- SHUTTLE LAUNCH AND INTEGRATED PROPULSION STAGE BASED ON INTELSAT VI
- COMFORTABLE MASS AND POWER MARGINS

5.1 STRUCTURE/HARNESS SUBSYSTEM

STRUCTURE/HARNESS SUBSYSTEM

The Mars Orbiter structure subsystem is the same as the HS 376 with minor modifications. A dual load path design, with an inner path through a central cone and an outer path through launch locks, reduces structural mass. The HS 376 harness is sufficient with changes limited to instrument integration and the new equipment on the despun shelf.

STRUCTURE/HARNESS SUBSYSTEM

HUGHES

- SPECIFICATIONS/REQUIREMENTS
- COMPONENT LOCATION
- MASS AND HERITAGE
- KEY FEATURES

STRUCTURE SUBSYSTEM SPECIFICATIONS/REQUIREMENTS

The Mars Orbiter structure must survive launch, injection, and orbit insertion loads. The structure must support the engineering equipment; the science instrument platform must provide sufficient rigidity to maintain the precise science instrument pointing. The structure subsystem includes deployment mechanisms. Pyrotechnic pin puller and bolt cutters release the boom and launch locks. The positioners that move the appendages following deployment are part of the attitude control subsystem.

STRUCTURE SUBSYSTEM SPECIFICATIONS/REQUIREMENTS

HUGHES

- SURVIVE STS LAUNCH LOADS
- SURVIVE INJECTION LOADS
- SURVIVE ORBIT INSERTION LOADS
- PROVIDE DEPLOYMENT OF ANTENNA AND SCIENCE BOOMS
- PROVIDE RIGID SCIENCE INSTRUMENT SUPPORT

STRUCTURE SUBSYSTEM COMPONENT LOCATIONS

The despun structure consists of a monocoque thrust cone, annular equipment shelves with outer cylindrical sections that surround the conical frustum, and a composite X-beam mounted on the BAPTA flange. The high gain antenna and feed support attaches to one side of the X-beam. The science instrument shelf mounts on the other side of the X-beam.

The spinning shelf is a honeycomb sandwich platform that supports all spinning electronic components. Four 21-inch diameter propulsion tanks surround the spinning thrust cone; support struts bolted to the tank fittings provide better rigidity than clamps.

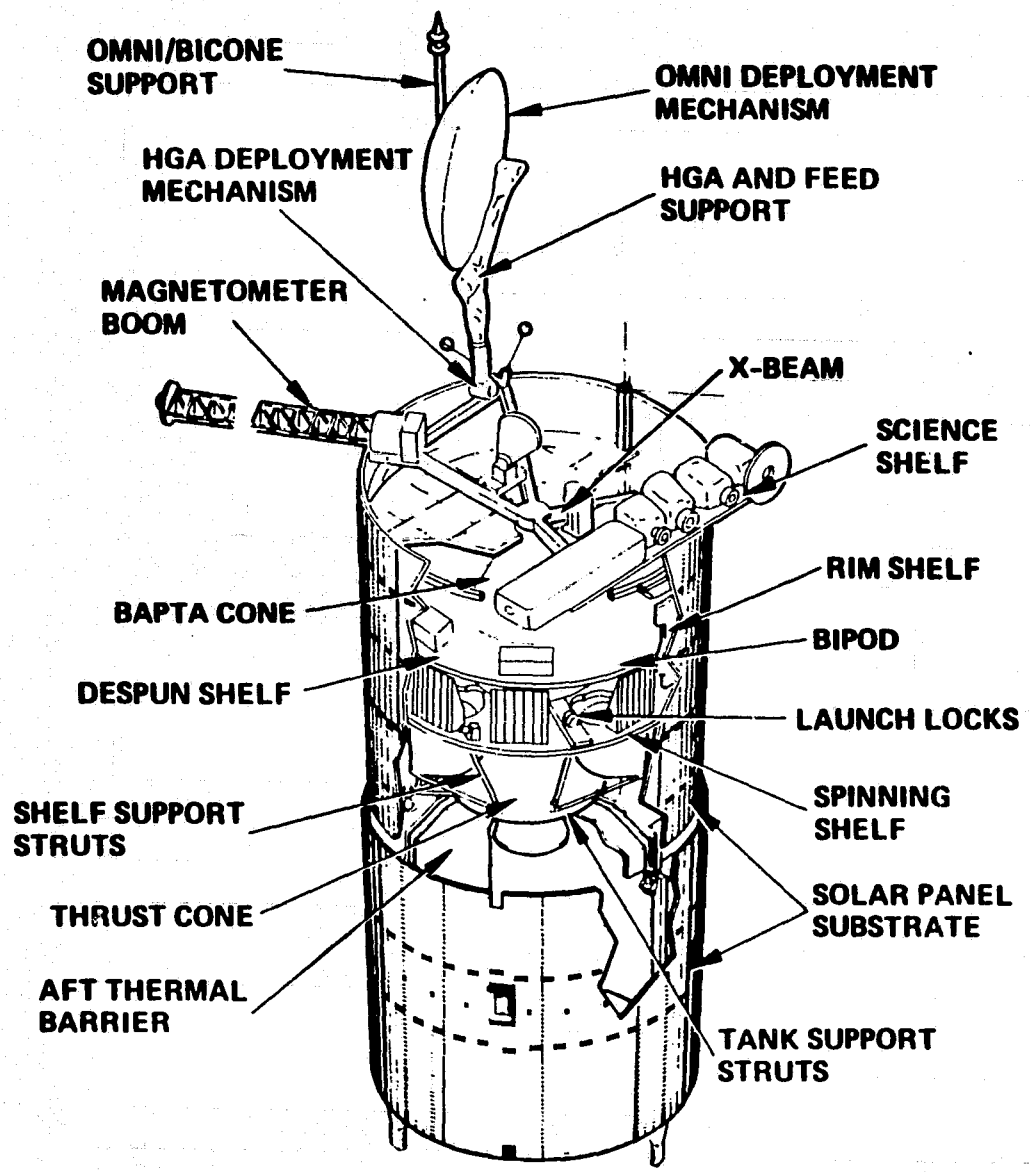

HUGHES

STRUCTURE SUBSYSTEM COMPONENT LOCATIONS

ORIGINAL PAGE IS OF POOR QUALITY

826514–30

STRUCTURE SUBSYSTEM MASS AND HERITAGE (SPUN)

The spinning structure is identical to HS-376 except the support for the STAR-31 orbit insertion motor for the climatology mission. This aluminum, semimonocoque motor support attaches the aft end of the motor to the usual HS-376/PAM-D interface. It carries the launch, injection, and STAR-31 motor firing load through the same load path as the PAM-D and launch loads on an HS-376 launch.

The solar array substrates, designed for the Palapa-B HS-376 program, consist of an aluminum honeycomb core with graphite and Kevlar/epoxy face sheets. The inner cylinder bolts to the spinning shelf at eight points and is stabilized by the spinning thermal shield near the forward end and by three struts at the aft end. During launch, pyrotechnic locking devices pin the outer cylinder to the three aft struts; spacers separate it from the inner cylinder.

The propulsion support hardware from the SBS 1A HS-376 spacecraft accommodates the 21-inch diameter propellant tanks.

STRUCTURE SUBSYSTEM MASS AND HERITAGE
SPUN

HUGHES

COMPONENT	MASS, KG		SOURCE	MODIFICATION
	CLIMATOLOGY	AERONOMY		
SEPARATION RING	5.49	SAME	HS 376	NONE
MOI MOTOR SUPPORT CONE	4.66	SAME	HS 376	NONE
MOTOR SUPPORT	20.00	1.87	NEW/HS 376	–/NONE
TANK SUPPORT RING	0.88	SAME	HS 376 (SBS 1A)	NONE
EQUIPMENT SHELF	12.05	SAME	HS 376	NONE
FWD SUBSTRATE	15.76	SAME	HS 376 (PALAPA)	NONE
AFT SUBSTRATE	12.05	SAME	HS 376 (PALAPA)	NONE
SHELF STRUT ASSEMBLY	2.47	SAME	HS 376	NONE
THRUST TUBE CYLINDER	1.85	SAME	HS 376	NONE
BAPTA SUPPORT CONE	2.79	SAME	HS 376	NONE
PANEL DRIVE STABILIZERS (3)	0.65	SAME	HS 376	NONE
PANEL LAUNCH LOCKS (3)	1.69	SAME	HS 376	NONE
SPUN/DESPUN LAUNCH LOCKS (4)	2.35	SAME	HS 376	NONE
FWD SPINNING SHELF BRACKET	0.50	SAME	HS 376	NONE
PROPULSION SUPPORT HARDWARE	8.01	SAME	HS 376 (SBS 1A)	NONE
SEPARATION SWITCH AND BRACKET	0.91	SAME	HS 376	NONE
SUBSTRATE TIES	0.72	SAME	HS 376	NONE
UMBILICAL MOUNTING BRACKETS (2)	0.23	SAME	HS 376	NONE
BATTERY SUPPORTS	0.54	SAME	HS 376	NONE
MISC ATTACH HARDWARE	5.32	SAME	HS 376	NONE
SPUN SUBTOTAL	98.92	80.79		

826514–81

ORIGINAL PAGE IS
OF POOR QUALITY

STRUCTURE SUBSYSTEM MASS AND HERITAGE (DESPUN)

The X-beam replaces the HS-376 beam structure which supports the communications satellites antenna reflector and feeds. Crossmembers tie the ends of the X-beam. Bipods connect the beam assembly to the despun shelf to further support it.

For the climatology orbiter, a graphite/epoxy honeycomb shelf attaches to the X-beam and crossmember to support the nadir-oriented PMR and FIS science instruments. The GRS sensor deploys on a one-piece 2.6m boom. The HGA attaches to the X-beam on the opposite side of the spacecraft from the nadir-oriented instruments. The X-beam holds the deployed HGA mast parallel to the spin axis and provides an attachment for the Astromast magnetometer boom and the star scanner and tracker. The stowed HGA clamps to the X-beam.

The Mars Orbiters deploy the HGA mast, omni/bicone antennas and GRS boom using damped, spring-driven actuators. Pyrotechnically-actuated pin pullers retain the stowed appendages; locking devices hold them in their deployed position. The antenna and GRS boom deployment devices are derived from the HS-376 omni antenna deployment mechanism. The 6 meter Dynamic Explorer Astromast deploys the magnetometer.

All despun structure except the HGA support structure, booms, science shelf, and X-beam assembly is unchanged from HS-376. These remaining parts are simple adaptations of similar designs.

STRUCTURE SUBSYSTEM MASS AND HERITAGE
DESPUN

HUGHES

COMPONENT	MASS, KG		SOURCE	MODIFICATION
	CLIMATOLOGY	AERONOMY		
RIM SHELF	8.38	SAME	HS 376	NONE
EQUIPMENT SHELF	6.18	SAME	HS 376	NONE
SHELF SUPPORT CONE	2.90	SAME	HS 376	NONE
EQUIPMENT SHELF ATTACH	0.52	SAME	HS 376	NONE
BIPOD FITTINGS	0.30	SAME	HS 376	NONE
X-BEAM	5.88	SAME	NEW	–
SCIENCE SHELF	2.00	2.50	NEW	–
SCIENCE SHELF ATTACH	1.50	1.50	NEW	–
HGA AND FEED SUPPORT	5.68	SAME	NEW	–
HGA LAUNCH LOCKS	0.90	SAME	NEW	–
HGA DEPLOYMENT MECH	2.10	SAME	HS 376	NONE
OMNI-BICONE SUPPORT	0.40	SAME	NEW	–
OMNI-DEPLOYMENT MECH	0.70	SAME	HS 376	NONE
PIN PULLERS (2)	0.32	SAME	PIONEER VENUS	NONE
GRS BOOM	4.70	–	NEW	–
GRS BOOM LOCKS	1.40	–	NEW	–
GRS BOOM DEPLOYMENT MECH	2.10	–	HS 376	NONE
MAGNETOMETER BOOM	–	7.53	DYNAMIC EXPLORER	NONE
MISC ATTACH HARDWARE	3.00	SAME	HS 376	NONE
DESPUN SUBTOTAL	48.96	48.79		
TOTAL	147.80	129.50		

826514–82

HARNESS MASS AND HERITAGE

The harness design minimizes EMI while ensuring high reliability. Selection of components, materials, and processes is consistent with practices developed for more than 50 spacecraft designed and built at Hughes. A common ground plane is provided through the entire spacecraft structure. Ground straps or conductive epoxies provide continuity where adhesive bonding is used. Grounding of all external blankets, thermal barriers, and covers protects inner assemblies from EMI and static charge and provides the ground plane necessary for the TIMS. The solar panel substrate core and face sheets are grounded together by metal pins extending through the inner facesheet and core and conductively bonded to the outer facesheet.

The existing HS-376 harness suffices for the spun section with only minor changes reflecting the few unit substitutions. A portion of the despun signal and power harness must be revised to accommodate the science instruments and communications and data handling equipment.

HARNESS MASS AND HERITAGE

HUGHES

COMPONENT	MASS, KG		SOURCE	MODIFICATION
	CLIMATOLOGY	AERONOMY		
SPUN				
SIGNAL AND POWER	12.40	SAME	HS 376	UNIT WIRING
ORDNANCE	1.88	SAME	HS 376	NONE
SOLAR PANEL INTERCONNECTS (3)	0.68	SAME	HS 376	MATERIAL CHANGE
FLIGHT PLUGS AND COVERS	0.15	SAME	HS 376	NONE
ENVIRONMENTAL CONNECT MOD	0.04	SAME	HS 376	NONE
STS SAFETY SWITCHES	0.23	SAME	HS 376	NONE
GROUND STRAPS	0.17	SAME	HS 376	NONE
HARNESS INSTALLATION BUILDUP	0.46	SAME	HS 376	NONE
DESPUN				
SIGNAL AND POWER	8.00	9.00	NEW	–
ORDNANCE	0.88	1.00	NEW	–
FLIGHT PLUGS AND COVERS	0.14	SAME	HS 376	NONE
ENVIRONMENTAL CONNECT MOD	0.03	SAME	HS 376	NONE
HARNESS INSTALLATION BUILDUP	0.14	SAME	HS 376	NONE
TOTAL	25.20	26.32		

826514–83

STRUCTURE SUBSYSTEM KEY FEATURES

The Mars Orbiter structure basically remains unchanged from the existing, flight proven HS-376 structure. The addition of the climatology motor mount represents the only deviation from the existing spinning structure.

The HS-376 structure is qualified to withstand Delta launch vehicle loads. Since the Delta launch loads are more severe than those imposed by the horizontal Shuttle launch configuration, the HS-376 already can survive the STS launch loads.

The 8g peak acceleration experienced during injection on the integrated propulsion stage is well within the 12g design level of the existing structure. The 10g loads encountered during Mars orbit insertion are also within design limits. For the climatology mission, the uncaged BAPTA is qualified to withstand the 10g load and the small residual bending moments due to slight inaccuracies in platform static balance. The X-beam load is distributed similarly to the normal HS-376 communications payload and does not require changes to the existing despun structure below the X-beam. The instrument shelf with a 2-inch thick aluminum honeycomb core and .012 in graphite facesheets provides a rigid science platform that resists thermal distortion.

STRUCTURE SUBSYSTEM KEY FEATURES

HUGHES

- SPINNING SECTION UNCHANGED FROM HS-376 (NEW CLIMATOLOGY MOTOR MOUNT)
- STRUCTURAL COMPATIBILITY WITH HORIZONTAL SHUTTLE LAUNCH CONFIGURATION
- 12 g EXISTING STRUCTURE ACCOMMODATES 8 g MAXIMUM INJECTION LOADS
- BAPTA WITHSTANDS 10 g ORBIT INSERTION LOADS AND BENDING MOMENTS WITH S/C STATICALLY BALANCED
- ACCOMMODATION OF SCIENCE INSTRUMENT PLATFORM DOES NOT CHANGE EXISTING DESPUN STRUCTURE BELOW Y-BEAM
- GRAPHITE HONEYCOMB EQUIPMENT SHELF MAINTAINS INSTRUMENT ALIGNMENT

ORIGINAL PAGE IS OF POOR QUALITY

PRECEDING PAGE BLANK NOT FILMED

5.2 PROPULSION SUBSYSTEM

PROPULSION SUBSYSTEM

The Mars Orbiter uses a high performance liquid bipropellant propulsion subsystem. The propulsion hardware proposed is identical to the HS-376 as designed in its application for SBS 1A, except the climatology orbiter uses a STAR-31 MOI motor.

PROPULSION SUBSYSTEM

HUGHES

- SPECIFICATIONS/REQUIREMENTS
- SUBSYSTEM LAYOUT
- MASS AND HERITAGE
- TANK/THRUSTER CHARACTERISTICS
- KEY FEATURES

PROPULSION SUBSYSTEM SPECIFICATIONS/REQUIREMENTS

The large ΔV requirements of the Mars Orbiter missions demand the performance of a liquid bipropellant propulsion subsystem. Propellant requirements include trajectory correction maneuvers, orbit trim, plane changes, spin up, and attitude control. A detailed breakdown of maneuver requirements appears in the separate mission analysis sections. A solid motor inserts the spacecraft into Mars orbit from the hyperbolic approach trajectory. The subsystem must be capable of completing the mission with the loss of any single thruster.

PROPULSION SUBSYSTEM SPECIFICATIONS/REQUIREMENTS

HUGHES

- PROVIDE ΔV, ATTITUDE AND SPIN CONTROL (232 kg USABLE BIPROPELLANT)
- SOLID MOTOR FOR ORBIT INSERTION
- PROVIDE CAPABILITY TO COMPLETE MISSION WITH LOSS OF ANY SINGLE THRUSTER

PROPULSION SUBSYSTEM COMPONENT LOCATIONS

The entire propulsion subsystem is on the spinning side of the spacecraft. The 21" diameter bipropellant tanks attach to support struts around the thrust cone. The spun structure supports the remaining subsystem elements which are welded together and installed as one assembly.

In its communications application, the HS-376 uses the STAR-30B for the apogee kick maneuver. The aeornomy mission retains this motor for Mars orbit insertion. The higher energy requirements of the climatology mission require the larger STAR-31 motor for orbit insertion. The STAR-31 diameter fits the HS-376 motor compartment, but the nozzle and part of the propellant case extend below the stowed solar drum.

HUGHES

PROPULSION SUBSYSTEM COMPONENT LOCATIONS

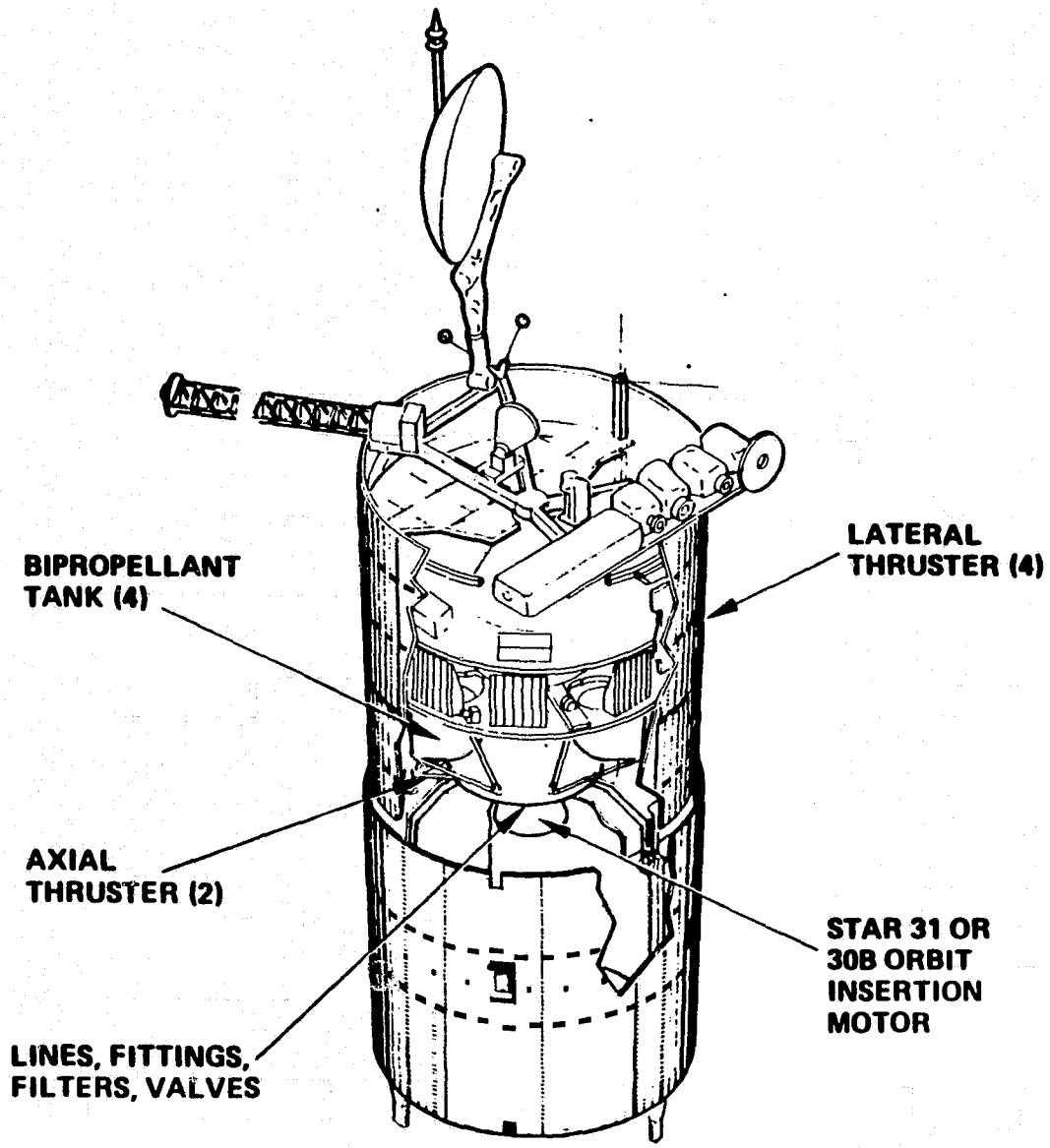

826514–29

ORIGINAL PAGE IS OF POOR QUALITY

PROPULSION SUBSYSTEM CONFIGURATION

Four twenty-one inch diameter conispherical tanks, two for fuel and two for oxidizer, support the Mars Orbiter mission requirements. The bipropellant system uses monomethyl hydrazine (MMH) for fuel and nitrogen tetroxide (N_2O_4) for the oxidizer. The maximum propellant capacity depends on the pressure blowdown range; the selected blowdown ratio of 2.9:1 allows a total tank propellant loading of 236 Kg. The centrifugal force on the propellant due to rotation ensures positive porting, eliminating the need for less reliable propellant expulsion systems. The propellant tanks have the required safety factor of 2:1 at maximum STS temperature for a loaded pressure of 260 psia at 85°F.

The propulsion subsystem has two identical thruster branches, each branch containing a fuel and an oxidizer filter, four isolation latch valves, and three thruster assemblies. The isolation latch valves in each branch permit disconnecting the thrusters from the pressurized fluid manifolds. Two isolation latch valves on each propellant line combined with the thruster valve provide three-seat protection against propellant leakage as required for Shuttle safety. The thrusters are fully redundant with either branch of three thrusters sufficient for all mission operations. The propellant manifolds make all propellant available to any thruster.

PROPULSION SUBSYSTEM CONFIGURATION

HUGHES

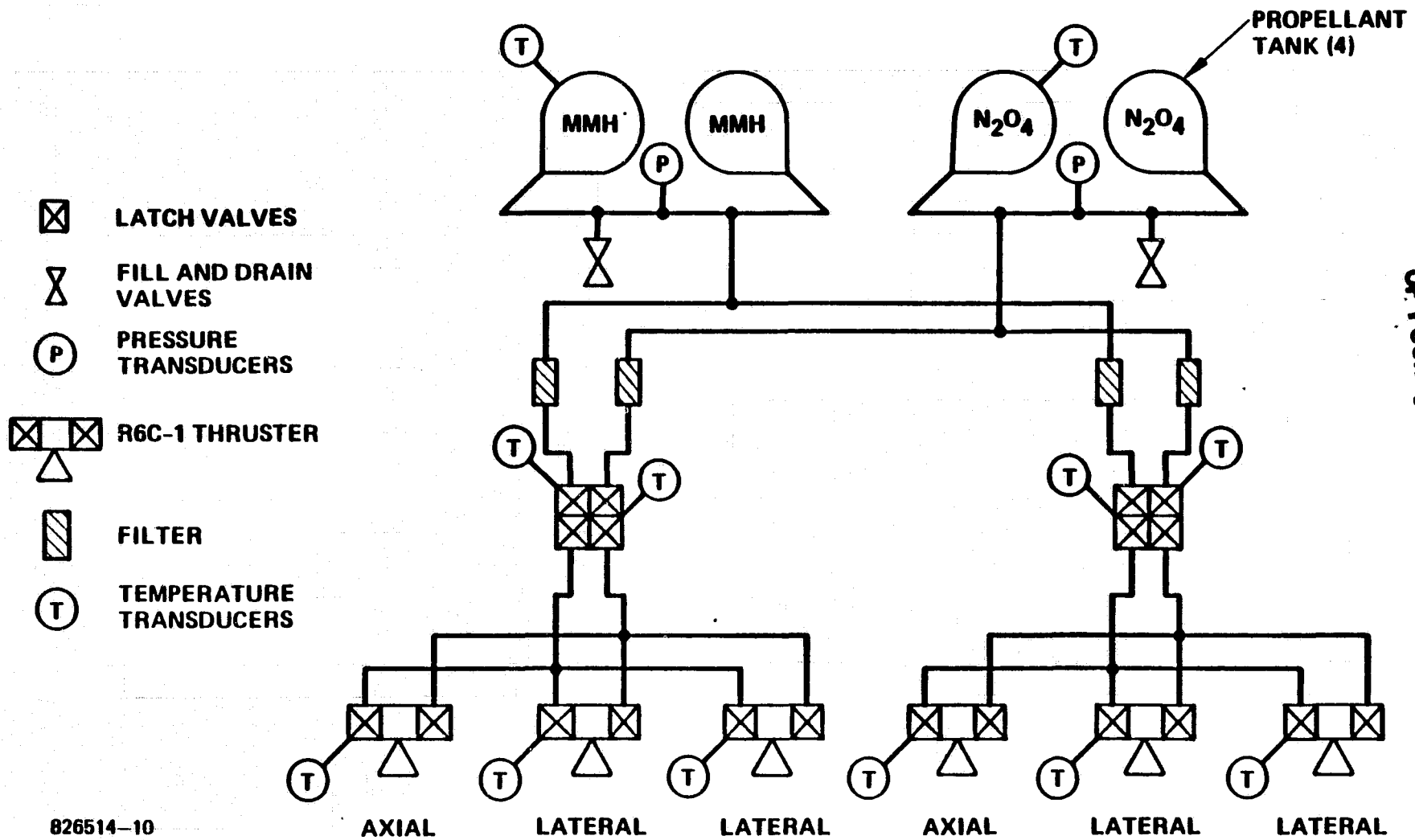

826514–10

ORIGINAL PAGE IS OF POOR QUALITY

THRUSTER ARRANGEMENT

The Mars Orbiters use two axial and four lateral thrusters. The axial thrusters are offset from the spin axis and canted inward 8° to minimize plume impingement and resulting drag loss on the inner surface of the aft extended solar drum. The lateral thrusters, aligned to thrust through the longitudinal spacecraft center of mass, are canted to provide radial and tangential thrust.

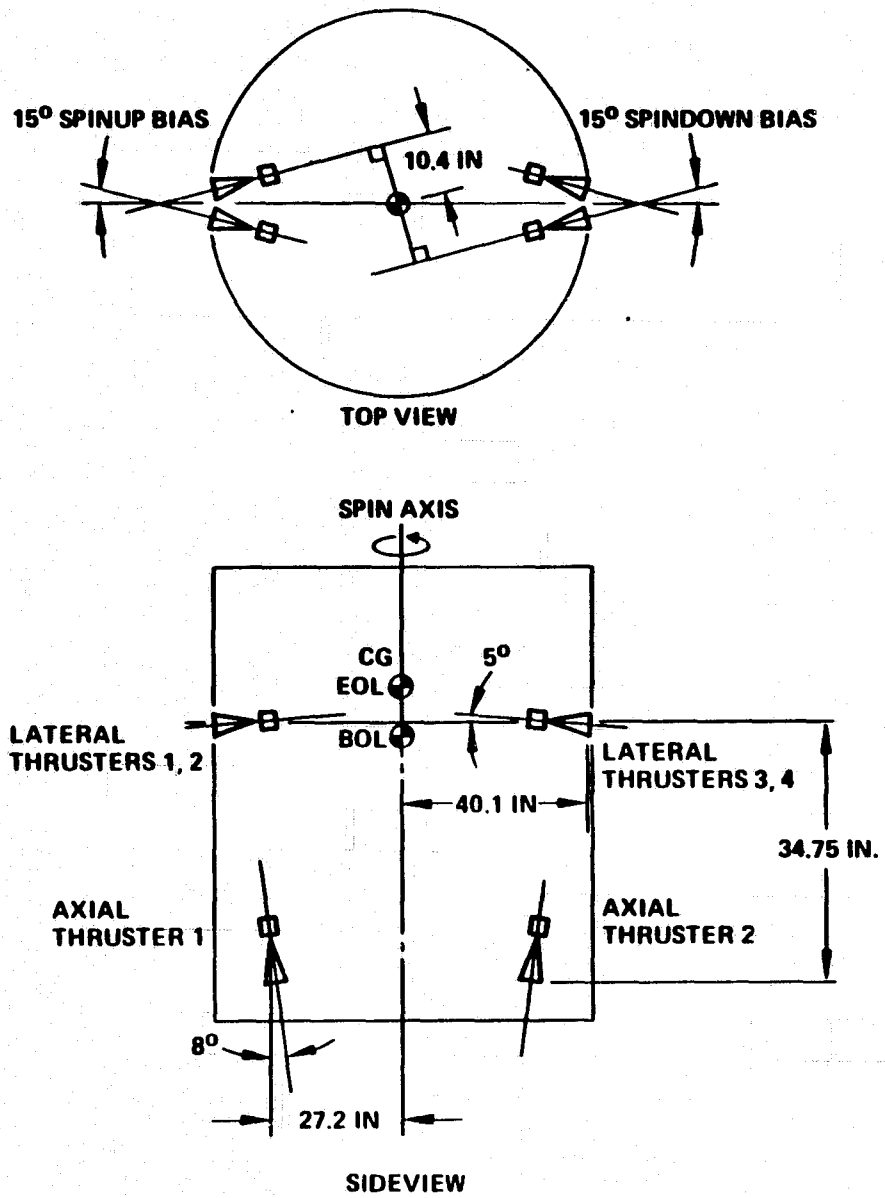

HUGHES

THRUSTER ARRANGEMENT

ORIGINAL PAGE IS OF POOR QUALITY

826514–9

LIQUID PROPULSION SUBSYSTEM MASS AND HERITAGE

Except for the tanks and thruster valves the propulsion subsystem, located entirely on the spinning side of the spacecraft, uses components identical to the HS-376 spacecraft. The bipropellant latching valve design was used on Intelsat IVA and manufactured by Hydraulic Research. The pressure transducer is a product of Gulton Industries, which flew on OSO, Palapa, Intelsat IVA, Comstar, and other spacecraft, and is qualified for HS-376. The fill and drain valves are a Hughes design and have flown Intelsat IVA, Marisat, Palapa, OSO, and other spacecraft.

The filters used in all Hughes propulsion subsystems are manufactured by Vacco to Hughes source control drawings and cover a wide variety of flow capacities, filtration particle size ratings, and contaminant holding capacity.

The propellant tanks are the latest HS-376 design resized for increased propellant capacity. Their first application is on the SBS-1A spacecraft although other sales are anticipated before they are needed for Mars Orbiter.

The Marquardt R6C-1 bipropellant thrusters and thruster valves are also planned for SBS-1A and have been qualified for INSAT and SAL. (SAL is a Hughes DoD program spinning spacecraft with a ten year mission life using an integrated bipropellant system for station keeping, attitude control, and apogee kick.)

LIQUID PROPULSION SUBSYSTEM MASS AND HERITAGE

HUGHES

UNIT	MASS, KG		SOURCE	MODIFICATION
	CLIMATOLOGY	AERONOMY		
PROPELLANT TANKS (4)	12.85	SAME	HS 376 (SBS 1A)	NONE
LATERAL THRUSTERS (4)	2.60	SAME	HS 376 (SBS 1A)	NONE
AXIAL THRUSTERS (2)	1.30	SAME	HS 376 (SBS 1A)	NONE
FILTERS (4)	0.27	SAME	HS 376 (SBS 1A)	NONE
LATCHING VALVES (8)	2.18	SAME	HS 376 (SBS 1A)	NONE
LINES AND FITTINGS	2.00	SAME	HS 376 (SBS 1A)	NONE
FILL AND DRAIN VALVES (2)	0.24	SAME	HS 376 (SBS 1A)	NONE
PRESSURE TRANSDUCERS (2)	0.30	SAME	HS 376 (SBS 1A)	NONE
TEMPERATURE SENSORS (12)	0.30	SAME	HS 376 (SBS 1A)	NONE
WIRING	0.10	SAME	HS 376 (SBS 1A)	NONE
HELIUM	0.43	SAME	HS 376 (SBS 1A)	NONE
TOTAL	22.57	22.57		

ORIGINAL PAGE IS OF POOR QUALITY

826514-85

PROPULSION SUBSYSTEM CHARACTERISTICS

Tanks

The 3.2 Kg propellant tanks are similar to those used on all HS-376 spacecraft. Fansteel makes them of 6Al-4V titanium using standard techniques. The identical fuel and oxidizer tanks are 5000 in^3, 21-inch diameter conispheres. A port at the conical end allows liquid withdrawal during ground servicing.

A minimum tank pressure of 90 psia corresponds to an end of life (EOL) tank temperature of 40°F. Maximum operating presure of 260 psia corresponds to a nominal design temperature of 70°F. Propellant tank pressurization maintains a better than 2:1 margin below the 527 psia tank burst pressure at all times in the Orbiter bay.

Thrusters

Six Marquardt R6C-1 thrusters provide fully redundant capability to change spacecraft orbit, attitude, and spin rate. The 5-lb_f thruster has two nozzle configurations. The radial thrusters incorporate a 100:1 one-piece columbium C-103 chamber and nozzle; the axial thruster extends the nozzle to an expansion ratio of 300:1. The conical titanium 6AL-4V extension attaches to the columbium nozzle by electron beam welding after the columbium has been coated with R512A silical metallic. This axial conical nozzle extension reduces the plume impingement on the aft solar panel during ΔV maneuvers.

The R6C-1 thruster combustion chamber is also C-103 columbium with R512A molybdenum disilicide coating. The thruster is entirely radiation cooled and has a simple one-to-one impinging jet injection design. This design maximizes the diameters of the injection orifices (0.0155 inch fuel and 0.0185 inch oxidizer) which prevents thruster malfunction due to contaminant plugging the injector holes. The thrusters will remain operable throughout the life of their internal protective coating. The R6C-1 can operate in steady state or pulse mode with a minimum impulse bit capability of 0.02 lbf-sec and no known limitation on providing larger impulse bits.

The R6C-1 thruster valves are single seat, flexure-guided poppet solenoid devices. The valve seat is teflon, and the valve operates without sliding contact between moving parts. Radial valve poppets eliminate rubbing and generation of metallic debris which can foul the seat contact area and cause valve leakage. This valve design has demonstrated over 1,000,000 component level cycles at Marquardt with a confirmatory test by AFRPL, Edwards AFB, to over 800,000 cycles. For INSAT the valve/thruster combination has been qualified to over 120,000 cycles.

TANKS

- 21" DIAMETER CONISPHERE
- 5000 in^3 CAPACITY
- 6Al-4V TITANIUM
- PRESSURE
  - 527 psia Burst Pressure (2:1 Margin for Shuttle safety)
  - 260 psia Maximum Operating Pressure
  - 90 psia Minimum Operating Pressure

THRUSTERS - MARQUARDT R6L-1

	Nominal	Range
THRUST	5 lb	3 - 8 lb
FEED PRESSURE	220 psia	100 - 400 psia
MIXTURE RATIO	1.65	1 - 2.4
SPECIFIC IMPULSE: (steady state)	285 lb_f - sec/lb_m	
MINIMUM IMPULSE BIT:	0.02 lb - sec	
MAXIMUM FIRING TIME:	Continuous	
PROPELLANT THROUGHPUT	236 kg	Up to 750 kg

ORIGINAL PAGE IS OF POOR QUALITY

PROPULSION SUBSYSTEM KEY FEATURES

The Mars Orbiters feature a high performance liquid bipropellant propulsion subsystem. The 21-inch diameter conispherical propellant tanks provide a 35 percent increase in volume over the current HS-376 19-inch tanks. The 21-inch tanks fit within the spinning compartment without modifying the spinning shelf configuration. Propellant tank pressurization assures better than 2:1 burst pressure at all times in the Shuttle bay.

All components have already been qualified or will be qualified on other Hughes spacecraft programs. The subsystem design includes redundant heaters, blankets, and low emittance tape wrap to avoid thermal operational constraints and maintain temperatures to a minimum of 10°C above the nitrogen tetroxide freezing point. The thrusters are fully redundant; each branch of three thrusters can do all mission maneuvers.

Mars orbit insertion is performed by the STAR-31 solid motor for climatology and the STAR-30B for aeronomy. Thiokol builds both motors using the improved propellant TP-H-3340. The Star 31 motor fits within the compartment which normally houses the Star 30-B motor. In flight, thermal blankets maintain the motor temperature between 40°F and 90°F. Two motors will be available during launch preparation of each spacecraft. Safe and arm devices meet STS safety requirements for both motors.

The STAR-31 motor is currently in production as the third stage of the Scout launch vehicle. The length of the Star-31 case and nozzle contribute to the overall stack height in the Shuttle. For minimum stack height the nozzle has been cut 18 inches (resulting in a predicted effective I_{sp} of 283 sec). The stack height is short enough so the climatology mission Shuttle costs are based on mass. The maximum motor offload, without requalification, of 20% to 1038 Kg expendables minimizes launch mass. The STAR-31 requires one sea level acceptance firing to verify that the offload is satisfactory and also check the computed performance for the offload and nozzle cut.

The aeronomy mission uses the nominal STAR-30B propellant load of 508 kg which eliminates the requirement for a separate acceptance test.

PROPULSION SUBSYSTEM KEY FEATURES

HUGHES

LIQUID

- BLOWDOWN BIPROPELLANT SYSTEM QUALIFIED ON HS-376 PRIOR TO 1985
- INTERNAL SUBSYSTEM REDUNDANCY: MISSION COMPLETED WITH LOSS OF ANY SINGLE THRUSTER OR VALVE

SOLID

CLIMATOLOGY - STAR 31

- FITS WITHIN HS-376 MOTOR COMPARTMENT ENVELOPE
- CURRENTLY IN PRODUCTION STATUS FOR SCOUT THIRD STAGE
- QUALIFIED FOR NOZZLE CUT UP TO 28 INCHES
- ONE SEA LEVEL ACCEPTANCE FIRING TO VERIFY OFFLOAD, NOZZLE CUT AND IDENTIFY MOTOR PERFORMANCE

AERONOMY - STAR 30B

- CURRENTLY USED ON HS-376
- USE OF FULLY LOADED MOTOR ELIMINATES SEPARATE ACCEPTANCE TEST

PRECEDING PAGE BLANK NOT FILMED

5.3 COMMUNICATIONS SUBSYSTEM

COMMUNICATIONS SUBSYSTEM

The 20-watt Mars Orbiter communications subsystem consists of RF antennas, NASA standard transponder, and both S- and X-band transmitters. The units are derived from ongoing Hughes programs.

- SPECIFICATIONS/REQUIREMENTS
- CONFIGURATION/BLOCK DIAGRAM
- MASS AND HERITAGE
- ANTENNA/UNIT CHARACTERISTICS
- LINK PERFORMANCE
- KEY FEATURES

COMMUNICATIONS SUBSYSTEM SPECIFICATIONS/REQUIREMENTS

The communications subsystem must radiate a DSN-compatible downlink and must receive the uplink commands generated by the DSN. Specifically the subsystem must: 1) radiate an S-band signal for DSN acquisition, 2) acquire an uplink S-band signal and transpond a phase-coherent downlink, 3) transmit an internally generated S- or X-band signal while receiving an uplink signal, 4) receive ground commands, and 5) telemeter data at the downlink data rates shown.

COMMUNICATIONS SUBSYSTEM SPECIFICATIONS/REQUIREMENTS

HUGHES
HUGHES AIRCRAFT COMPANY

- DSN COMPATIBLE (S OR X-BAND)
- RECEIVE GROUND COMMANDS FROM ALL MISSION ATTITUDES
- TRANSMIT TELEMETRY AND RECEIVE COMMANDS SIMULTANEOUSLY
- DOWNLINK BIT RATE
  - 8 BPS DURING CRUISE
  - 8192 BPS CLIMATOLOGY ON ORBIT
  - 4096 BPS AERONOMY ON ORBIT

COMMUNICATION SUBSYSTEM COMPONENT LOCATIONS

All of the communications subsystem equipment is located on the despun side of the spacecraft. The three Mars Orbiter antennas mount on a support located on the X-beam opposite the science instrument shelf. The communications electronic units mount on the despun equipment shelf. The units mount near the central telemetry and command processor units, the major subsystem interfaces. Coax cables connect to the spacecraft antennas. In addition, the X-band signals from the TWT travel through waveguide to the dual-frequency feed at the focal point of the 1.1 m parabolic reflector.

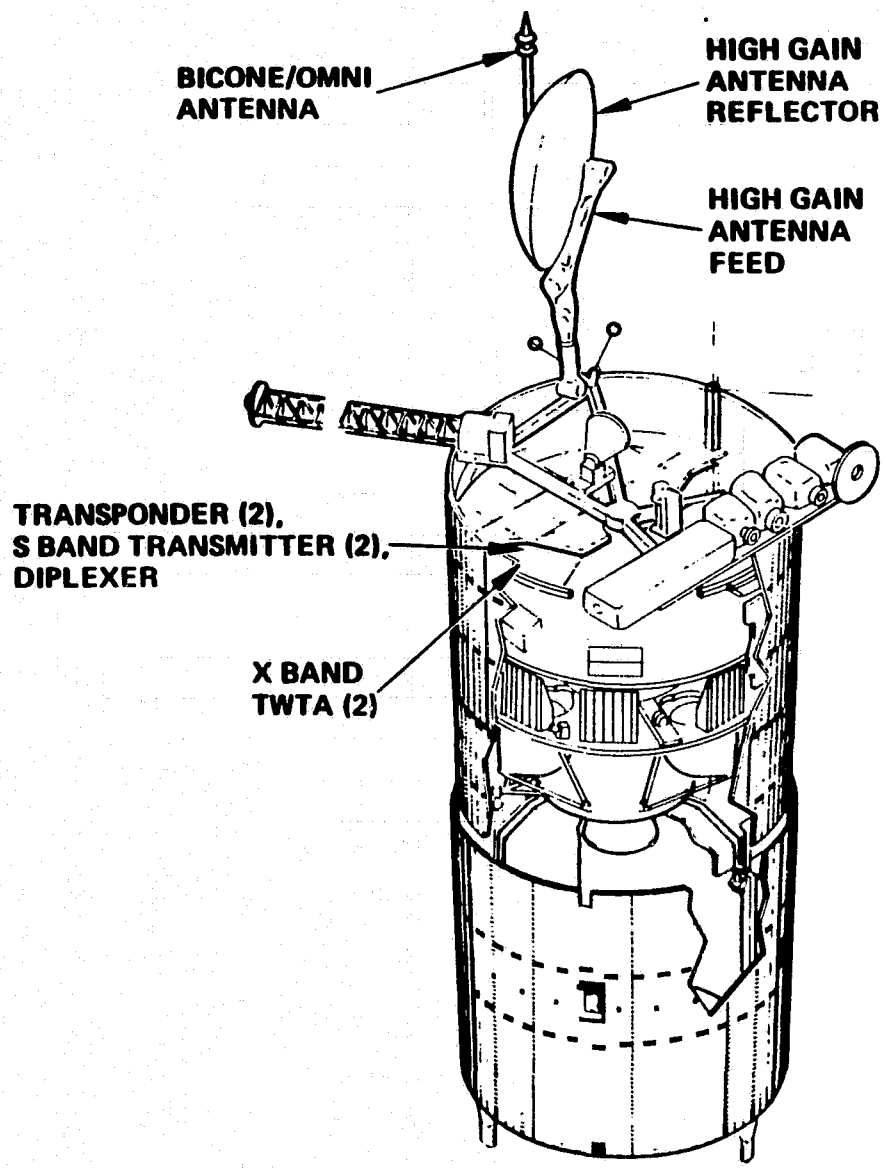

HUGHES

COMMUNICATIONS SUBSYSTEM COMPONENT LOCATIONS

ORIGINAL PAGE IS OF POOR QUALITY

826514–28

COMMUNICATIONS SUBSYSTEM FUNCTIONAL DIAGRAM

The NASA standard deep space transponder is the heart of the communications subsystem. The exiter contains both S- and X-band ports. A 3 dB hybrid splits the S-band signal into two strings for parallel redundancy. A C-switch connects either S-band transmitter to either the high gain antenna or omni/bicone pair, guarding against a transmitter failure.

The signal from the X-band exciter is split between redundant TWTAs; a switch can select either string in case of a failure.

The omni or bicone antenna receives the uplink signal. Series SPDT and C-switches select the antenna and avoid single point failures. The received signal passes through a diplexer to the receiver transfer switch which connects the active transponder. A five-section band reject filter in the transmitter channel provides a minimum 80 dB transmitter noise isolation at the receive frequency. The transponder sends the received commands to the command processor unit and accepts telemetry from the central telemetry unit for transmission.

COMMUNICATIONS SUBSYSTEM FUNCTIONAL DIAGRAM

HUGHES

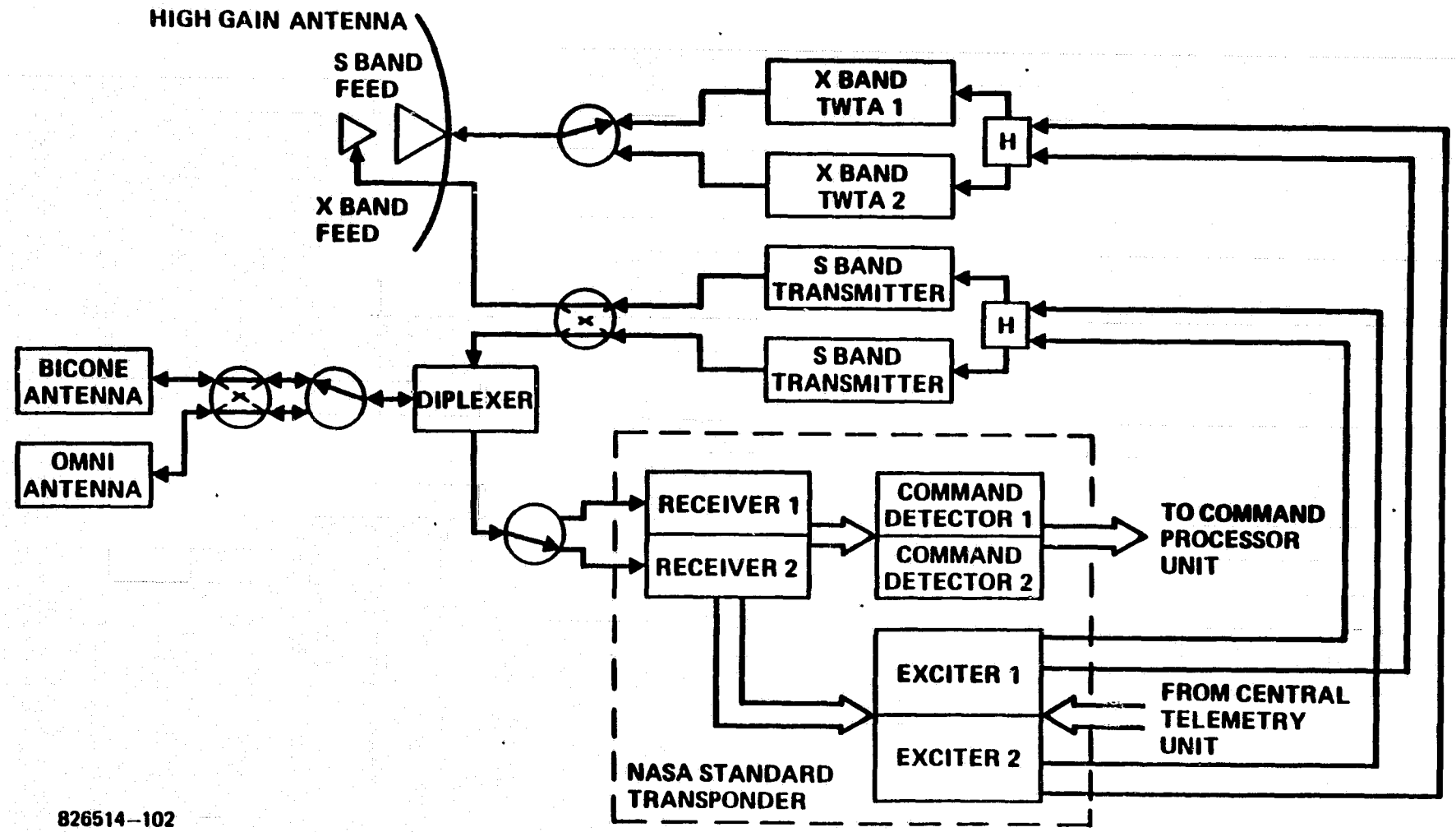

826514–102

ORIGINAL PAGE IS OF POOR QUALITY

COMMUNICATIONS SUBSYSTEM MASS AND HERITAGE

The climatology and aeronomy communication subsystems are identical. The Mars Orbiter communications electronics either already exist or are under development for current Hughes programs.

COMMUNICATIONS SUBSYSTEM MASS AND HERITAGE

HUGHES

UNIT	MASS, KG		SOURCE	MODIFICATION
	CLIMATOLOGY	AERONOMY		
NASA STANDARD TRANSPONDERS (2)	5.54	SAME	NASA STANDARD	NONE
S BAND TRANSMITTERS (2)	4.70	SAME	GOES G, H	NONE
SWITCH DRIVERS (5)	0.91	SAME	PIONEER VENUS, GOES	NONE
DIPLEXER	0.34	SAME	PIONEER VENUS, SAL	NONE
S SWITCHES (2)	0.14	SAME	PIONEER VENUS, GOES	NONE
C SWITCHES (3)	0.40	SAME	PIONEER VENUS, GOES	NONE
3 dB HYBRIDS (2)	0.18	SAME	PIONEER VENUS, GOES	NONE
X BAND TWTs (2)	2.00	SAME	DSCS III	NONE
ELECTRONIC POWER CONDITIONERS (2)	4.40	SAME	SBS, SAP 304	CHANGE FREQ
OMNI ANTENNA	0.18	SAME	PIONEER VENUS	NONE
BICONE ANTENNA	1.16	SAME	LEASAT	CHANGE FREQ
HGA REFLECTOR	2.40	SAME	GALILEO PROBE	NONE
HIGH GAIN ANTENNA FEED	0.60	SAME	PIONEER VENUS	NONE
FEED SUPPORT	0.60	SAME	NEW	–
X BAND WAVEGUIDE	0.60	SAME	NEW	–
COAX CABLE	2.80	SAME	NEW	–
TOTAL	26.95	26.95		

ORIGINAL PAGE IS OF POOR QUALITY

826514–88

COMMUNICATIONS SUBSYSTEM CHARACTERISTICS

Antennas

The Mars Orbiters use the 1.1 meter high gain antenna reflector currently being designed and built for the Galileo Probe program. It has a 3 dB beamwidth of 2.1° and peak gain of 37.1 dB at X-band. The side mounted Pioneer Venus type dual frequency feed provides S- and X-band capability.

The bicone antenna scales from the Leasat 7.5 GHz design. It is the primary antenna during the last few weeks of cruise prior to orbit insertion, the primary receive antennna on-orbit, and a back up transmit antenna on-orbit. It has a -2 dB beamwidth of $\pm 15°$ and a peak gain of 4.0 $\pm$.8 dB.

The omni antenna is identical to the PV turnstile, which consists of a crossed dipole radiator above a conical ground plane. The turnstile element produces circular polarization and a relatively narrow 70° 3 dB beamwidth. The conical ground plane broadens the beamwidth for nearly hemispherical gain coverage. The minimum bicone/omni antenna gain in the 2π steradian field of view is -2 dB.

S-Band Transmitter

The S-band transmitter is identical to the GOES G,H design. It contains a driver amplifier section and high power transmitter section. Both sections use MSC (Microwave Semiconductor Corp.) power transistors. These devices have a long history of good performance on Hughes flight programs.

Isolator coupling of the transistor stages provides a well-controlled loading for each stage. The 20 watt transmitter operates in a saturated mode for maximum efficiency, with all the stages of the transmitter simultaneously saturated to provide low AM to PM conversion. Spurious outputs are more than 60 dB down at the transmitter output.

The high power transmitter modules use hybrid coupled MSC 3005 transistor stages. Multiple hybrid coupled output stages maintain the high dc to RF efficiency of the MSC 3005 and efficiently spread the heat from these stages on the spacecraft electronics equipment shelf. All commanded control of the transmitter is performed through the logic, voltage regulators, and switch drivers located in the driver amplifier. The logic ensures that the RF switches latch prior to application of RF energy and that the dc power is on before application of the RF drive. This logic design provides maximum reliability of the switches and high power transistor stages.

X-Band TWTA

The traveling wave tube is the 20 W model configured and space-qualified for DSCS III. Two manufacturing sources include Hughes or Watkins-Johnson Company. The Hughes lightweight power supply draws upon an extensive experience reflected in the in-flight performance record of electronic power conditioners (EPCs) the company has built for a wide variety of commercial and military programs.

NASA Standard Transponder

The transponder consists of a phase lock receiver, command detector unit (CDU), S-band exciter, and X-band exciter. The receiver locks its oscillator to the uplink carrier and demodulates the digital command signal from the 16 kHz subcarrier. The command detector delivers the digital command bit stream, clock timing signal, and in-lock signal to the command subsystem. A 16 kHz baseband input to the command detector permits hardline commanding of the spacecraft command processor during launch. The receiver VCO signal connects to the exciter section of the transponder where it splits into two paths, is phase modulated with data, and is frequency multiplied to the downlink frequencies. The separate paths provide S-band and X-band sources. If the receiver is not locked to an uplink signal, an RF switch in the exciter section automatically selects an internal quartz crystal oscillator to drive both the S- and X-band transmitters. This noncoherent mode provides downlink telemetry without uplink signal from the earth, and can be used if noncoherent downlink is desired when the uplink is present. Both receivers are hardwired to the power bus with the primary and active standby units determined by the position of the receiver transfer switch. The receivers are uniquely addressable from the ground since they have different frequencies.

- ANTENNAS
  - 1.1 METER GALILEO RELAY REFLECTOR WITH PV DUAL FREQUENCY FEED
  - MODIFIED LEASAT BICONE
  - TURNSTILE OMNI (PV)
- S-BAND TRANSMITTER
  - 20 WATTS
  - MIC TECHNOLOGY
  - POWER AMP AND DRIVER COMBINED
- X-BAND TWTA
  - 20W TWT WITH ELECTRONIC POWER CONDITIONER
- NASA STANDARD TRANSPONDER

COMMUNICATIONS LINK ASSUMPTIONS

The table lists the assumptions behind the link performance calculations. The on-orbit link calculations assume the maximum range of 2.63 AU. The total high gain antenna pointing uncertainty combines errors from spacecraft pointing knowledge, antenna mechanical and electrical alignment, and thermal effects. All the links assume 95% weather at all three ground stations and a minimum elevation angle of 20°. The weather calculations assume average whole-year distributions.

The high gain antenna performance scales from test data available on the Galileo reflector. The minimum E_b/N_o assumes convolutionally encoding with K=7, R=1/2, for the specified probability of real time frame deletion or detected bit error less than 10^{-4}.

Command links assume a DSN transmit power capability of 85 kw.

COMMUNICATIONS LINK ASSUMPTIONS

HUGHES

- 20 w TELEMETRY TRANSMIT POWER
- 85 kw COMMAND TRANSMIT POWER
- 64 m DSN DISH
- 10 Hz DSN TRACKING BANDWIDTH
- 20^{0} GROUND STATION ELEVATION ANGLE
- 95% WEATHER
- BER = 10^{-4} WITH CONVOLUTIONAL CODING (E_b/N_0 = 3.9 dB)

COMMUNICATIONS PERFORMANCE

The table summarizes the communications link performance for the various design conditions. The subsystem supports margin above 3σ adverse tolerances for all links. Detailed listings of the design control tables appear on the following pages. The method of accounting for DSN parameters and performance tolerances follows the guidelines of JPL Deep Space Network/Flight Project Interface Design Book Document 810-5, Rev. D. Nominal link performance budgets consider the algebraic sum of the design value of each parameter or the mean of its tolerance distribution function. Adverse tolerance budgets specify the parameter variances for both carrier tracking and data demodulator SNR performance and combine the tolerances as three times the square root of the variance sums. Transponder performance specifications determine the minimum E_b/N_o required to achieve the command link BER.

The link can support 8192 bps at X-band with over 1 dB margin above adverse tolerance. The performance drops approximately 5 dB from X- to S-band. The link provides a minimum 32 bps uplink with 4 dB margin. The bicone supports 16 bps telemetry at the worst-case cruise range of 1.48 AU.

COMMUNICATIONS PERFORMANCE

- HIGH GAIN ANTENNA (TELEMETRY, MAXIMUM RANGE)

TRANSMIT FREQUENCY, MHz	2295	8415
TRANSMIT POWER, W	20	20
GAIN, dB	26.2	37.5
BEAMWIDTH (-3 dB), DEGREES	7.6	2.0
DOWNLINK DATA RATE, BPS	2048	8192
MARGIN ABOVE ADVERSE TOLERANCE, dB	2.4	1.37

- BICONE (TELEMETRY, ORBIT INSERTION)

TRANSMIT FREQUENCY, MHz	2295
TRANSMIT POWER, W	20
GAIN, dB	4
BEAMWIDTH (-6 dB), DEG	30
DOWNLINK DATA RATE, BPS	16
MARGIN ABOVE ADVERSE TOLERANCE, dB	2.0

- BICONE/OMNI (COMMAND, MAXIMUM RANGE)

COMMAND FREQUENCY, MHz	2115
GAIN, dB	-2dB
COMMAND BIT RATE, BPS	32
MARGIN ABOVE ADVERSE TOLERANCE, dB	4.0

TABLE X2 DESIGN CONTROL TABLE

TELEMETRY/X BAND/64 METER NET/HI GAIN ANTENNA / MARS MISSION -(MOI+250 DAYS, 2.63 AU)

	PARAMETER	NOMINAL VALUE	ADVERSE TOLERANCE	DIST. TYPE	FAVORABLE TOLERANCE	MEAN	VARIANCE
1.	TRANSMITTER POWER, DBM	43.01	-0.20	T	0.20	43.01	0.01
2.	TRANSMIT CIRCUIT LOSS, DB	-0.50	-0.20	T	0.20	-0.50	0.01
3.	S/C ANTENNA GAIN, DB	37.10	-0.80	T	0.80	37.10	0.11
4.	POINTING LOSS, DB (ERR=0.3 DEG)	-0.25	0.00	T	0.25	-0.17	0.00
5.	SPACE LOSS, DB	-282.84	0.00		0.00	-282.84	0.00
6.	ATMOSPHERIC LOSS, DB(ELV ANG=20.)	-1.00	0.00		0.00	-1.00	0.00
7.	RECEIVE ANTENNA GAIN, DB	71.80	-0.60	T	0.60	71.80	0.06
8.	POLARIZATION LOSS, DB	-0.07	-0.16	T	0.06	-0.10	0.00
9.	POINTING LOSS, DB	-0.20	0.00	T	0.10	-0.17	0.00
10.	RECEIVE CIRCUIT LOSS, DB	0.00	0.00		0.00	0.00	0.00
11.	RECEIVE TOTAL POWER, DBM (SUM OF LINES 1. THROUGH 10.)					-132.87	0.19
	12A. ZENITH NOISE TEMP, K	25.00	3.00	G	-3.00		
	12B. DELTA-T (ELEVATION),K	9.00					
	12C. DELTA-T (ATMOSPHERE),K	46.19 **					
	12D. SYSTEM NOISE TEMP,K	80.19	3.00		-3.00		
	12E. SYSTEM NOISE TEMP,DB-K	19.04	0.16		-0.17		
	12F. BOLTZMANN'S CONST, DBM/HZ-K	-198.60					
12.	NOISE PWR DENSITY, DBM/HZ	-179.56	-0.16	G	0.17	-179.56	0.00
13.	PT/NO (11.-12.), DBM-HZ					46.69	0.19
14.	CAR PWR/TOTAL PWR, DB (MI=80 DEG)	-15.21	-4.41	T	2.88	-15.72	2.25
15.	CAR-TO-NOISE-DENSITY,DB (13.+14.)					30.98	2.44
16.	LOOP BANDWIDTH (2BLO),DB-HZ	10.00	0.46	T	-0.41	10.02	0.06
17.	CARRIER S/N IN 2BLO,DB (15.-16.)					20.95	2.50
18.	MIN. REQUIRED S/N, DB (17.-18.)	10.00	0.00		0.00	10.00	0.00
19.	PERFORMANCE MARGIN, DB (17.-18.)					10.95	2.50
20.	3-SIGMA MARGIN, DB					6.20	(3 SIG=4.75)
21.	DATA MOD. LOSS ,DB (MI=80 DEG)	-0.13	-0.13	T	0.09	-0.15	0.00
22.	DSN SYSTEM MECH. LOSS, DB	-0.66	-0.50	U	0.30	-0.73	0.03
23.	DATA SIGNAL/NOISE DENSTY, DB-HZ (13.+21.+22.)					45.82	0.22
24.	BIT RATE BW (8192. BPS), DB-HZ	39.13	0.00		0.00	39.13	0.00
25.	STB/NO RATIO, DB (23.-24.)					6.68	0.22
26.	REQUIRED STB/NO, DB	3.90 *	0.00		0.00	3.90	0.00
27.	NOM. PERFORM. MARGIN, DB (25.+26.)					2.78	0.22
28.	3-SIGMA MARGIN, DB					1.37	(3 SIG=1.41)

*BER=10 -4 WITH CONVOLUTIONAL ENCODING
** 95.% WEATHER AT MADRID
95.% WEATHER AT CANBERRA
95.% WEATHER AT GOLDSTONE

ORIGINAL PAGE IS OF POOR QUALITY

TABLE T3 DESIGN CONTROL TABLE

TELEMETRY/S BAND/64 METER NET/ HI GAIN ANTENNA/ MARS MISSION -(MOI+250 DAYS, 2.63 AU)

	PARAMETER	NOMINAL VALUE	ADVERSE TOLERANCE	DIST. TYPE	FAVORABLE TOLERANCE	MEAN	VARIANCE
1.	TRANSMIT PWR, DBM (PT=20.0 WATTS)	43.01	-0.20	T	0.20	43.01	0.01
2.	TRANSMIT CIRCUIT LOSS, DB	-0.40	-0.20	G	0.20	-0.40	0.00
3.	S/C ANTENNA GAIN, DB (DIAM=1.10 m)	25.85	-0.50	T	0.50	25.85	0.04
4.	POINTING LOSS, DB (ERR= 0.9 DEG)	-0.14	0.00	T	0.05	-0.12	0.00
5.	SPACE LOSS, DB	-271.55	0.00		0.00	-271.55	0.00
6.	ATMOSPHERIC LOSS, DB	-0.17	0.00		0.00	-0.17	0.00
7.	RECEIVE ANTENNA GAIN, DB	61.70	-0.40	U	0.30	61.65	0.04
8.	POLARIZATION LOSS, DB	-0.03	-0.06	U	0.02	-0.05	0.00
9.	POINTING LOSS, DB	-0.20	0.00	U	0.10	-0.15	0.00
10.	RECEIVE CIRCUIT LOSS, DB	0.00	0.00		0.00	0.00	0.00
11.	RECEIVE TOTAL POWER, DBM (SUM OF LINES 1. THROUGH 10.)					-141.94	0.10
	12A. ZENITH NOISE TEMP, K	22.00	3.00	G	-3.00		
	12B. DELTA-T (ELEVATION),K	7.00					
	12C. DELTA-T (ATMOSPHERE),K	3.95					
	12D. SYSTEM NOISE TEMP,K	32.95	3.00		-3.00		
	12E. SYSTEM NOISE TEMP,DB-K	15.18	0.38		-0.41		
	12F. BOLTZMANN'S CONST, DBM/HZ-K	-198.60					
12.	NOISE PWR DENSITY, DBM/HZ	-183.42	-0.38	G	0.41	-183.42	0.00
13.	PT/NO (11.-12.), DBM-HZ					41.48	0.10
14.	CAR PWR/TOTAL PWR, DB (MI=80 DEG)	-15.21	-4.41	T	2.88	-15.72	2.25
15.	CAR-TO-NOISE-DENSITY,DB (13.+14.)					25.77	2.34
16.	LOOP BANDWIDTH (2BLO),DB-HZ	10.00	0.46	T	-0.41	10.02	0.06
17.	CARRIER S/N IN 2BLO,DB (15.-16.)					15.74	2.40
18.	MIN. REQUIRED S/N, DB	10.00	0.00		0.00	10.00	0.00
19.	PERFORMANCE MARGIN, DB (17 -18.)					5.74	2.40
20.	3-SIGMA MARGIN, DB					1.09	(3 SIG=4.65)
21.	DATA MOD. LOSS ,DB (MI=80 DEG)	-0.13	-0.13	T	0.09	-0.15	0.00
22.	SDA/SSA MECH. LOSS, DB	-0.66	-0.50	U	0.30	-0.76	0.05
23.	DATA SIGNAL/NOISE DENSTY, DB-HZ (13.+21.+22.)					40.58	0.15
24.	BIT RATE BW (2048 BPS), DB-HZ	33.11	0.00		0.00	33.11	0.00
25.	STB/NO RATIO, DB (23.-24)					7.45	0.15
26.	REQUIRED STB/NO, DB	3.90 *	0.00		0.00	3.90	0.00
27.	NOM. PERFORM. MARGIN, DB (25.-26.)					3.56	0.15
28.	3-SIGMA MARGIN, DB					2.40	(3 SIG=1.16)

*BER=10 -4 WITH CONVOLUTIONAL ENCODING ONLY.

ORIGINAL PAGE IS OF POOR QUALITY

TABLE T2— DESIGN CONTROL TABLE

TELEMETRY/S BAND/64 METER NET/ BICONE ANTENNA / MARS MISSION -(MOI+ 0 DAYS, 1.50 AU)

	PARAMETER	NOMINAL VALUE	ADVERSE TOLERANCE	DIST. TYPE	FAVORABLE TOLERANCE	MEAN	VARIANCE
1.	TRANSMIT PWR, DBM (PT=20.0 WATTS)	43.01	-0.20	T	0.20	43.01	0.01
2	TRANSMIT CIRCUIT LOSS, DB	-0.80	-0.30	G	0.30	-0.80	0.01
3.	S/C ANTENNA GAIN, DB (DIAM=4.00 m)	4.00	-0.80	T	0.80	4.00	0.11
4.	POINTING LOSS, DB (ERR= 0.9 DEG)	-0.40	-0.50	T	0.20	-0.50	0.02
5.	SPACE LOSS, DB	-266.66	0.00		0.00	-266.66	0.00
6.	ATMOSPHERIC LOSS, DB	-0.17	0.00		0.00	-0.17	0.00
7.	RECEIVE ANTENNA GAIN, DB	61.70	-0.40	U	0.30	61.65	0.04
8.	POLARIZATION LOSS, DB	-0.02	-0.06	U	0.01	-0.04	0.00
9.	POINTING LOSS, DB	-0.20	0.00	U	0.10	-0.15	0.00
10.	RECEIVE CIRCUIT LOSS, DB	0.00	0.00		0.00	0.00	0.00
11.	RECEIVE TOTAL POWER, DBM (SUM OF LINES 1. THROUGH 10.)					-159.67	0.19
	12A. ZENITH NOISE TEMP, K	22.00	3.00	G	-3.00		
	12B. DELTA-T (ELEVATION),K	7.00					
	12C. DELTA-T (ATMOSPHERE),K	3.95					
	12D. SYSTEM NOISE TEMP,K	32.95	3.00		-3.00		
	12E. SYSTEM NOISE TEMP,DB-K	15.18	0.38		-0.41		
	12F. BOLTZMANN'S CONST, DBM/HZ-K	-198.60					
12.	NOISE PWR DENSITY, DBM/HZ	-183.42	-0.38	G	0.41	-183.42	0.00
13.	PT/NO (11.-12.), DBM-HZ					23.76	0.19
14.	CAR PWR/TOTAL PWR, DB (MI=37 DEG)	-1.95	-0.22	T	0.20	-1.96	0.01
15.	CAR-TO-NOISE-DENSITY,DB (13.+14.)					21.80	0.19
16.	LOOP BANDWIDTH (2BLO),DB-HZ	10.00	0.46	T	-0.41	10.02	0.06
17.	CARRIER S/N IN 2BLO,DB (15.-16.)					11.77	0.26
18.	MIN. REQUIRED S/N, DB	10.00	0.00		0.00	10.00	0.00
19.	PERFORMANCE MARGIN, DB (17.-18.)					1.77	0.26
20.	3-SIGMA MARGIN, DB					0.25	(3 SIG=1.52)
21.	DATA MOD. LOSS ,DB (MI=37 DEG)	-4.41	-0.39	T	0.36	-4.42	0.02
22.	SDA/SSA MECH. LOSS, DB	-0.66	-0.50	U	0.30	-0.76	0.05
23.	DATA SIGNAL/NOISE DENSTY, DB-HZ (13.+21.+22.)					18.58	0.26
24.	BIT RATE BW (16 BPS), DB-HZ	12.04	0.00		0.00	12.04	0.00
25.	STB/NO RATIO, DB (23.-24)					6.54	0.26
26.	REQUIRED STB/NO, DB	3.90 *	0.00		0.00	3.90	0.00
27.	NOM. PERFORM. MARGIN, DB (25.-26.)					2.64	0.26
28.	3-SIGMA MARGIN, DB					1.10	(3 SIG=1.54)

*BER=10 -4 WITH CONVOLUTONAL ENCODING ONLY.

ORIGINAL PAGE IS OF POOR QUALITY

TABLE C2 DESIGN CONTROL TABLE

COMMAND/S BAND/64 METER NET/ BICONE ANTENNA / MARS MISSION -(MOI+250 DAYS, 2.63 AU)

	PARAMETER	NOMINAL VALUE	ADVERSE TOLERANCE	DIST. TYPE	FAVORABLE TOLERANCE	MEAN	VARIANCE
1.	TRANSMIT POWER, DBM	79.29	-0.50	T	0.50	79.29	0.04
2.	TRANSMIT CIRCUIT LOSS, DB	0.00	0.00	U	0.00	0.00	0.00
3.	TRANS ANT GAIN, DB	60.60	-0.70	T	0.30	60.47	0.04
4.	POINTING LOSS, DB	-0.10	0.00	T	0.10	-0.07	0.00
5.	SPACE LOSS, DB	-270.86	0.00		0.00	-270.86	0.00
6.	ATMOSPHERIC LOSS, DB	-0.17	0.00		0.00	-0.17	0.00
7.	RECEIVE ANTENNA GAIN, DB	-2.00	-0.80	T	0.80	-2.00	0.11
8.	POLARIZATION LOSS, DB	-0.08	-0.16	T	0.06	-0.12	0.00
9.	POINTING LOSS, DB (ERR=.00 DEG)	0.00	0.00	T	0.00	0.00	0.00
10.	RECEIVE CIRCUIT LOSS, DB	-0.80	-0.30		0.30	-0.80	0.03
11.	RECEIVE TOTAL POWER, DBM (SUM OF LINES 1. THROUGH 10.)					-134.25	0.22
12.	NOISE PWR DENSITY, DBM/HZ	-167.56	-0.30	G	0.60	-167.31	0.03
13.	PT/NO (11.-12.), DBM-HZ					33.06	0.26
14.	CAR PWR/TOTAL PWR, DB (MI=1.3 RAD)	-4.15	-0.20	T	0.20	-4.15	0.01
15.	CAR-TO-NOISE-DENSITY, DB (13.+14.)					28.91	0.27
16.	LOOP BANDWIDTH (2BLO), DB-HZ	12.55	0.80	T	-1.00	12.45	0.27
17.	CARRIER S/N IN 2BLO, DB (15.-16.)					16.46	0.54
18.	MIN. REQUIRED S/N, DB	10.00	0.00		0.00	10.00	0.00
19.	PERFORMANCE MARGIN, DB (17.-18.)					6.46	0.54
20.	3-SIGMA MARGIN, DB					4.26	(3 SIG=2.19)
21.	DATA MOD. LOSS, DB (MI=1.3 RAD)	-2.64	-0.10	T	0.10	-2.64	0.00
22.	RCV SYSTEM DETECT LOSS, DB	2.00	0.00	U	0.50	2.17	0.01
23.	DATA SIGNAL/NOISE DENSTY, DB-HZ (13.+21.+22.)					32.59	0.27
24.	BIT RATE BW (64.0 BPS), DB-HZ	18.06	0.00		0.00	18.06	0.00
25.	STB/NO RATIO, DB (23.-24)					14.52	0.27
26.	REQUIRED STB/NO, DB	11.50 *	1.10	T	-1.00	11.47	0.18
27.	NOM. PERFORM. MARGIN, DB (25.-26.)					3.06	0.46
28.	3-SIGMA MARGIN, DB					1.03	(3 SIG=2.03)

*BER=10 -7

ORIGINAL PAGE IS OF POOR QUALITY

COMMUNICATIONS SUBSYSTEM KEY FEATURES

Switching results in a fully-redundant communications subsystem without single point failures. The subsystem uses existing equipment to the maximum extent possible. The DSN-compatible design supports all links with adequate performance. S- and X-band downlinks provide mission flexibility and the option of dual-frequency radio science.

COMMUNICATION SUBSYSTEM KEY FEATURES

HUGHES

- FULLY REDUNDANT SUBSYSTEM
- S-BAND DOWNLINK DURING CRUISE
- X AND S-BAND DOWNLINK CAPABILITY ON ORBIT
- ADEQUATE LINK MARGINS FOR ALL LINK CONDITIONS

IMPACT OF S-BAND ONLY

An S-band only system eliminates the need for X-band traveling wave tubes and the design required to integrate the TWT and electronic power conditioner. This saves about $2M.

The design control tables show that an increase of 4.6 dB is required to maintain 1 dB margin above adverse tolerance at S-band. Transmitter power and/or high gain antenna diameter must increase. The spacecraft cannot currently supply power to increase the transmitter output. A 1.87 m diameter parabolic dish provides the necessary 4.6 dB increase but requries a new antenna and has configuration problems associated with stowing and articulating the larger dish.

The S-band only system also cannot do dual-frequency radio occultation experiments and reduces flexibility in DSN station selection.

IMPACT OF S-BAND ONLY

HUGHES

- ADVANTAGES

  - ELIMINATES X-BAND TWTAs FOR SOME COST REDUCTION

- DISADVANTAGES

  - LARGER HIGH GAIN REFLECTOR

    New Antenna Design
    1.87 Meter Reflector (6 ft)
    Impact on Configuration

  - ELIMINATES DUAL FREQUENCY RADIO OCCULTATION

  - DECREASED DSN FLEXIBILITY

IMPACT OF X-BAND ONLY

An X-band only system would send cruise and emergency on orbit telemetry back to earth through an omni/bicone antenna arrangement tailored to the X-band frequency. On-orbit science data would still be sent through the high gain antenna.

The advantage of an X-band only system is the elimination of S-band transmitters. The primary disadvantage is the DSN modification needed to provide X-band uplink capability. In addition, the NASA standard transponder would require modification to the receivers for reception of the X-band uplink signal. Finally, the X-band only communications subsystems would eliminate dual-frequency occultation experiments.

IMPACT OF X-BAND ONLY

HUGHES

ADVANTAGES

ELIMINATES S-BAND TRANSMITTER

DISADVANTAGES

REQUIRES DSN X-BAND UPLINK CAPABILITY

REQUIRES REVISION TO RECEIVER IN NASA STANDARD TRANSPONDER

ELIMINATES DUAL FREQUENCY RADIO OCCULTATION

IMPACT OF S-BAND UPLINK, X-BAND DOWNLINK

Changing the downlink to X-band only would require bicone and omni antennas at X-band while retaining the S-band bicone/omni capability for uplink. The advantage is the elimination of S-band transmitters. The major disadvantage is the requirement for a new dual frequency omni. No existing omni provides S-band receive and X-band transmit capability and two omnis cannot be coneniently arranged so both have hemispherical coverage.

Further study of S-band and X-band only systems, including detailed cost analysis, may favor a design change.

IMPACT OF S-BAND UPLINK, X-BAND DOWNLINK

HUGHES

ADVANTAGES

ELIMINATES S-BAND TRANSMITTER

DISADVANTAGES

REQUIRES DEVELOPMENT OF DUAL FREQUENCY OMNI

ELIMINATES DUAL FREQUENCY RADIO OCCULTATION

PRECEDING PAGE BLANK NOT FILMED

5.4 DATA HANDLING SUBSYSTEM

DATA HANDLING SUBSYSTEM (DHS)

This section describes the Mars Orbiter data handling subsystem. The DHS contains two central, four remote, and three tape recorder units. The flight proven GOES D,E units are the basis of the design. The specific architecture was developed for the Galileo probe carrier which had comparable stored/realtime operation.

DATA HANDLING SUBSYSTEM (DHS)

HUGHES

- SPECIFICATIONS/REQUIREMENTS
- COMPONENT LOCATION
- FUNCTIONAL DIAGRAM
- MASS AND HERITAGE
- UNIT CHARACTERISTICS
- KEY FEATURES

DHS SPECIFICATIONS/REQUIREMENTS

The DHS must format and code data consistent with reception by the DSN. Analog, bilevel, and serial digital inputs must be multiplexed onto a single PCM telemetry stream. Continuous science data sampling requires a large data storage capability.

DHS SPECIFICATIONS/REQUIREMENTS

HUGHES

- DSN COMPATIBILITY
- DATA FORMATTING; ANALOG, SERIAL, AND BILEVEL DATA
- A/D CONVERSION
- DATA STORAGE
- CONVOLUTIONALLY ENCODED TELEMETRY

DHS COMPONENT LOCATIONS

All DHS components except the spinning remote telemetry units mount on the despun platform where the instrument data sources and exciter/transmitter output equipment are also located. The specific location of the tape recorders and central telemetry units will be selected to simplify the harness and achieve required mass properties. The despun remote telemetry units are located near the instrument data sources to keep the analog signals close to the A/D converter. A redundant pair of remote telemetry units on the spun side process the spun telemetry channels onto a single data bus. The resulting small number of despun/spun interfaces signals cross the BAPTA through slip rings.

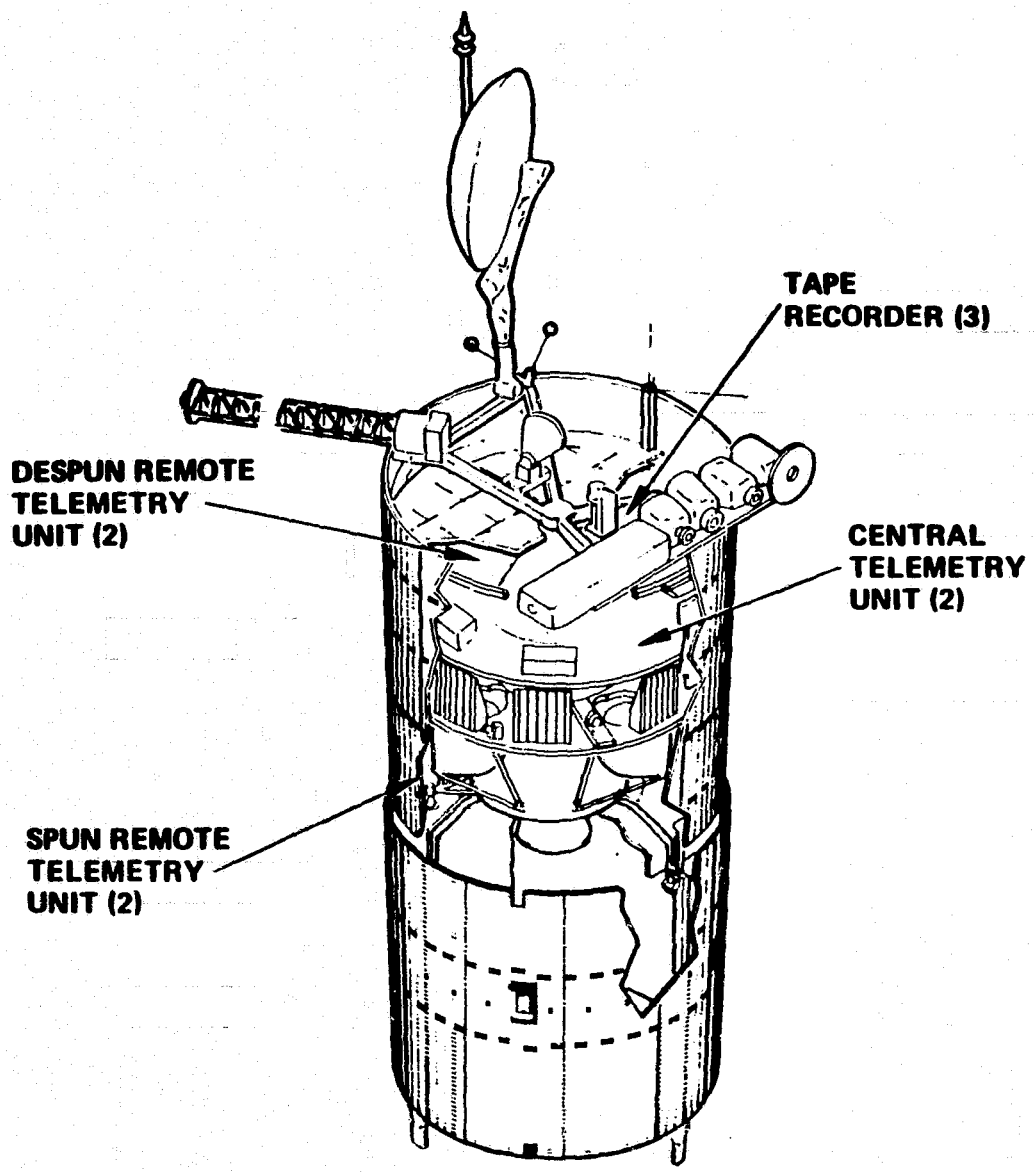

HUGHES

DATA HANDLING SUBSYSTEM COMPONENT LOCATIONS

826514–25

ORIGINAL PAGE IS
OF POOR QUALITY

DHS FUNCTIONAL DIAGRAM

An active central telemetry unit, despun remote, and spun remote perform all subsystem functions. The central telemetry unit (CTU) controls data collection through the RTU by a supervisory bus instruction. The RTU decodes the instruction, determines what data point to sample, digitizes analog data, and returns the data via a reply bus.

Cross-strapped standby units and component redundancy protect the subsystem from failures. In addition, the design assures that no failure in the subsystem can degrade any other subsystem.

Telemetry outputs include isolated redundant pulse code modulated (PCM) streams to the two exciters. These coded or uncoded outputs are modulated by a square wave subcarrier with eight commandable modulation indices. A separate uncoded packetized output with synchronous clock supplies the Shuttle cradle-mounted signal interface unit (SIU).

A 16-bit serial command configures the format, bit rate, modulation index, and operating mode. The command is processed immediately with format and bit rate changes delayed to the next minor frame.

DHS FUNCTIONAL DIAGRAM

HUGHES

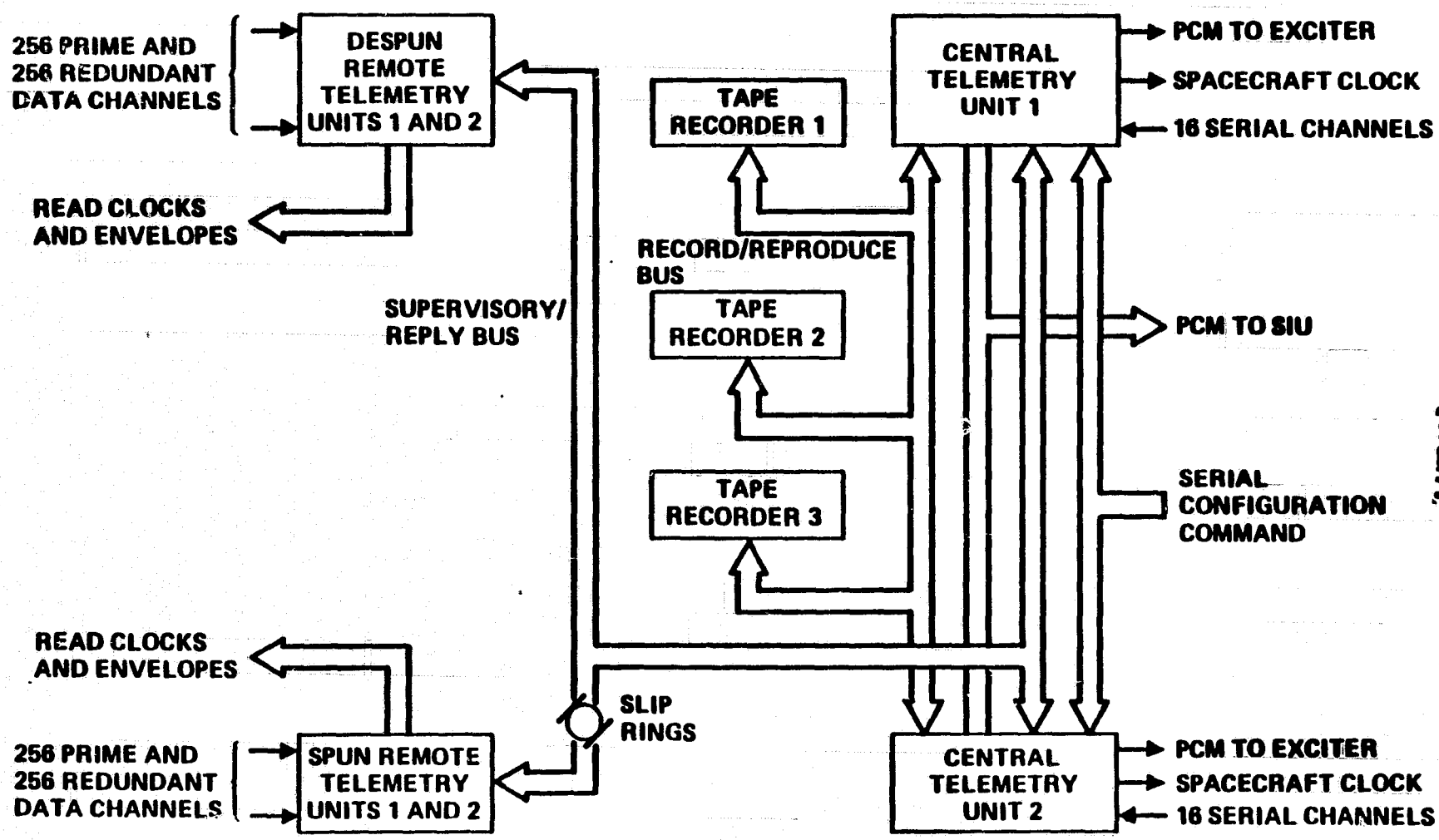

826514–37

ORIGINAL PAGE IS
OF POOR QUALITY

DHS MASS AND HERITAGE

The central telemetry unit (CTU) uses the same microcontroller and timing subassemblies as the GOES unit. The GOES mission-unique circuitry and format generator firmware need modification. The GOES remote units require no change because the CTU mission-unique circuitry accommodates the additional despun serial channels.

The Odetics tape recorders use the design flown on the Earth Resources Budget Satellite (ERBS) with changes limited to the transport control and head interface electronics.

DATA HANDLING SUBSYSTEM MASS AND HERITAGE

HUGHES

UNIT	MASS, KG		SOURCE	MODIFICATION
	CLIMATOLOGY	AERONOMY		
SPUN				
REMOTE TELEMETRY UNITS (2)	3.13	SAME	GOES	NONE
DESPUN				
CENTRAL TELEMETRY UNITS (2)	9.52	SAME	GOES	REVISED MISSION UNIQUE SLICE
REMOTE TELEMETRY UNITS (2)	3.13	SAME	GOES	NONE
TAPE RECORDERS (3)	25.86	SAME	ERBS	ELECTRONICS
TOTAL	41.64	41.64		

ORIGINAL PAGE IS OF POOR QUALITY

826514-90

DHS PARAMETERS

The data handling subsystem (DHS) provides the maximum required 8192 bps for the climatology mission and seven other command-selectable binary rates, including the 4096 bps rate required for the aeronomy mission and a minimum rate of 8 bps. Frames of 8-bit words are tailored to minimize the overhead on the primary instrument data. Instrument data are stored in 16,384 bit blocks including a 16-bit frame counter. During playback, synchronization, identification and engineering data increase the real time frame size to 16,704 bits.

The DHS also provides a master clock to the command subsystem and frame synchronization, word synchronization, and a continuous clock to the instruments. The central telemetry unit (CTU) directly processes 16 redundant serial data channels. The spun and despun remote pairs process four additional redundant serial channels. Each pair of remotes also multiplexes 252 redundant analog or bilevel channels.

The DHS has seven commandable data formats. These formats accommodate tape recorder playback, realtime data, command memory verification, attitude control subsystem status, and star scanner readout (aeronomy only). A dwell mode is also available with up to 8 selected dwell words.

DHS PARAMETERS

HUGHES

DOWNLINK DATA RATE, MAX	8192 bps (CLIM), 4096 bps (AERO)
WORD LENGTH	8 bits
FRAME LENGTH	16,384 bits STORED, 16,704 bits PLAYBACK
READ CLOCK FREQUENCY	8 kHz (16 kHz SUPERVISORY BUS)
TIMING SIGNALS	FRAME SYNC, WORD SYNC, CONTINUOUS CLOCK
DIRECT SERIAL CHANNELS	16 REDUNDANT
REMOTE ANALOG/BILEVEL CHANNELS	252 REDUNDANT SPUN 252 REDUNDANT DESPUN
REMOTE SERIAL CHANNELS	4 REDUNDANT SPUN 4 REDUNDANT DESPUN

CTU FUNCTIONAL DIAGRAM

The central telemetry unit (CTU) processor controls the timing to achieve the formats programmed in the PROM. It also sends supervisory instructions to the remote telemetry units (RTUs) and accepts the reply data. Two cascaded 2901A microprocessor chips yield 8-bit processing capability. The control program also processes the serial configuration command and generates a time code to tag telemetry output.

The spacecraft clock produces an error-protected timing source to synchronize the command subsystem and control execution of stored commands. The clock operates at a constant rate regardless of operating mode.

The multiplexer (MUX) provides timing signals and data channels for the 16 direct serial data channels.

The convolutional encoder provides a rate 1/2, constraint length 7, code and can be bypassed by command. It encodes all output data including the synchronization pattern.

The star scanner interrupt processor time tags pulses received from the scanner and provides a serial data output which the CTU processes in a special format.

CTU FUNCTIONAL DIAGRAM

HUGHES

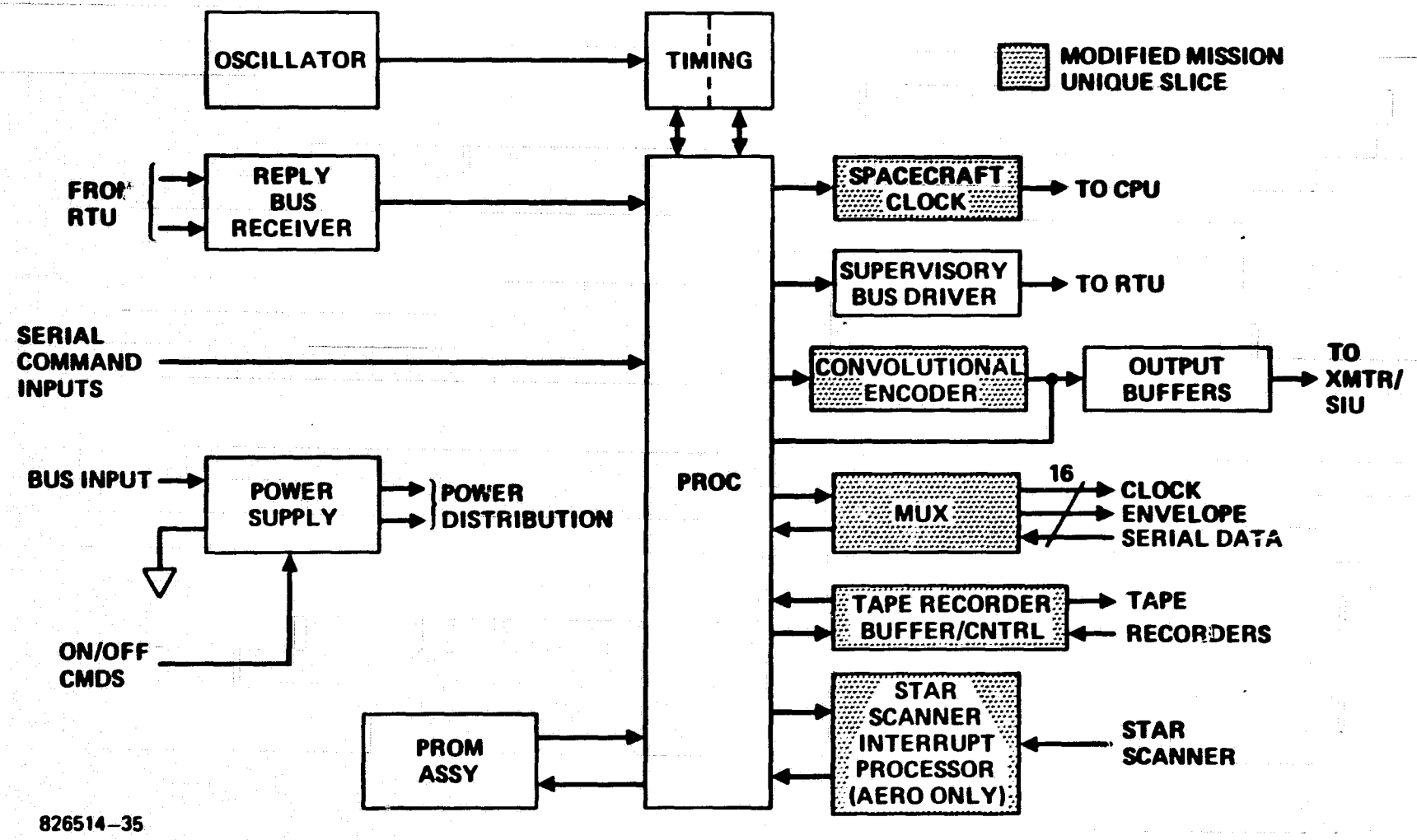

ORIGINAL PAGE IS OF POOR QUALITY

TAPE RECORDER INTERFACE AND CONTROL

A set of parallel 16 kbit buffers and switching control connect the two central telemetry units (CTUs) to the three tape recorders. Data from the CTU fill one buffer while a second buffer empties into the active recorder operating in a pulsed mode. A common record data bus supplies all three recorders; a command determines the active one. Switches reverse the buffer connection after each 16 kbits, providing uninterrupted sampling. The recorders operate at 16 kbps, which allows for tape speed up and speed down while meeting the 8 kbps maximum input rate.

The reproduce cycle reverses the buffering procedure with the commanded recorder playing back data on a common bus into another pair of 16 kbit buffers. Playback of the single track tape recorders reverses the order of the stored data. The FILO input memory also reverses the data to preserve the original data ordering within each 16 Kbit block. The second CTU also connects to the record and reproduce data buses, providing fully redundant cross-strapped capability.

The CTU configures the buffers by the indicated switches and synchronizes them with the recorders by direct control of the recorder start/stop command.

The 16 kbit buffers each use two MEH-11 memory devices containing eight 256 X 4 bit CMOS memory chips. These devices have been qualified for the Galileo probe.

TAPE RECORDER INTERFACE AND CONTROL

HUGHES

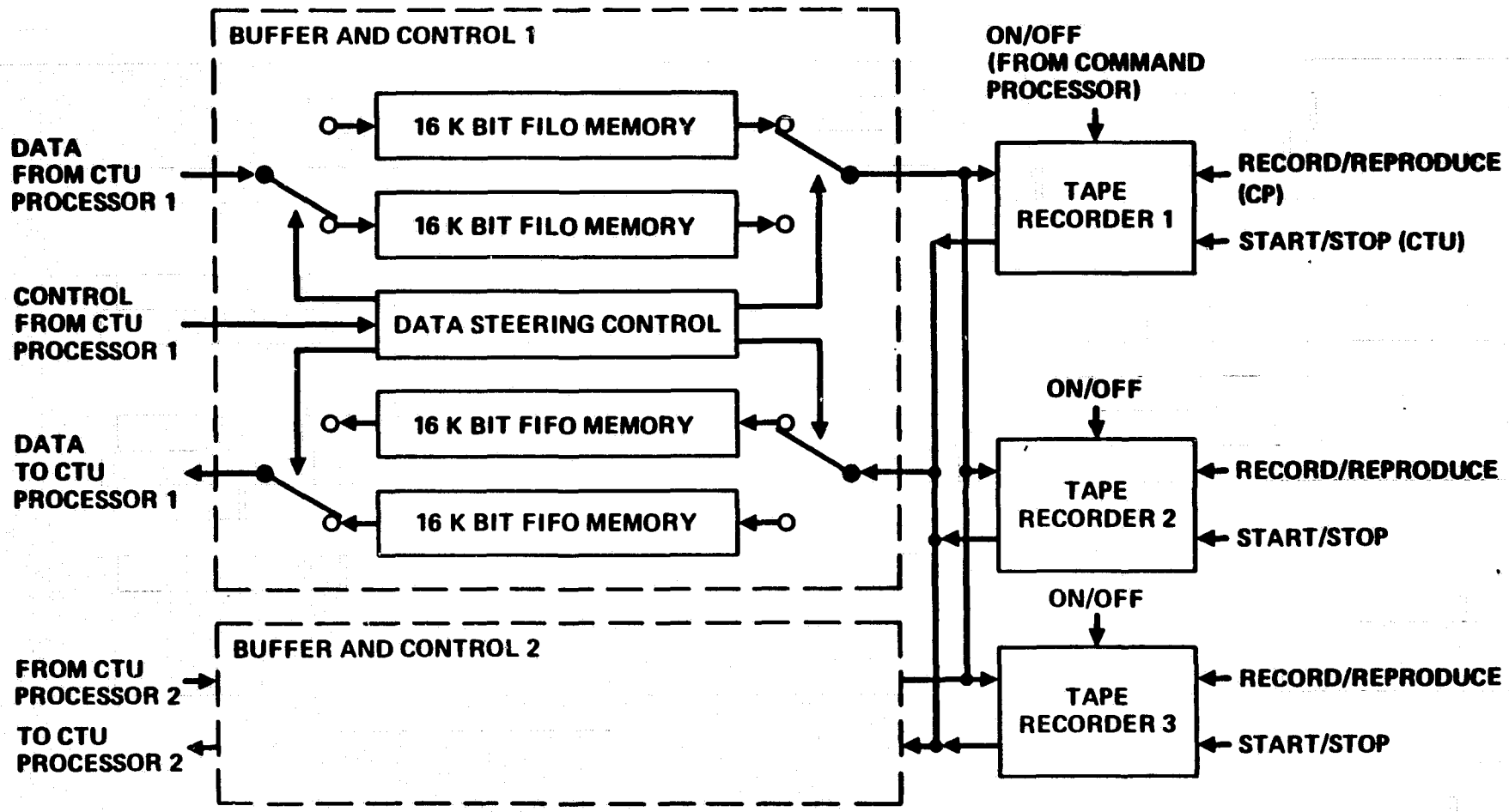

826514–15

ORIGINAL PAGE IS OF POOR QUALITY

TAPE RECORDER CHARACTERISTICS

The tape recorders are Odetics DDS-3100 series units capable of start/stop operation. A brushless dc motor drives the recorder at a single constant rate equivalent to 16 kbps. The single speed simplifies the recorder mechanical design. The single track tape is played back in the reverse direction, eliminating the need for rewinds. The 2000 foot tape holds 148.6 Mbits allowing for gaps during the speed up/slow down periods surrounding each pulsed operation. The worst-case 20,000 tape passes for the climatology extended mission (including drift operation) is less than the typical design value of 25,000 passes. Over sixty-two Odetics units have flown in space with a demonstrated MTBF of over 100,000 hours.

TAPE RECORDER CHARACTERISTICS

HUGHES

CONFIGURATION:	THREE UNITS: RECORD/PLAYBACK/STANDBY
UNIT:	ODETICS DDS-3100 SINGLE TRACK
CAPACITY:	148.6 Mbit
SPEED:	16 kbps CONSTANT SPEED RECORD AND PLAYBACK
OPERATION:	PULSED START/STOP, CTU CONTROL

RTU FUNCTIONAL DIAGRAM

Each RTU consists of a control module with four multiplexer modules. The control module contains the A/D converter, supervisory bus decode logic, reply bus drivers, continuous clock output, and multiplexer control logic. It also supplies 1 mA constant conditioning current for passive telemetry sensors. Each multiplexer module accommodates 64 telemetry channels and provides frame and word synchronization pulses. The RTU does not receive power directly from the bus; it uses secondary power from the CTU. The control module strobes the power and regulates the voltage.

RTU FUNCTIONAL DIAGRAM

HUGHES

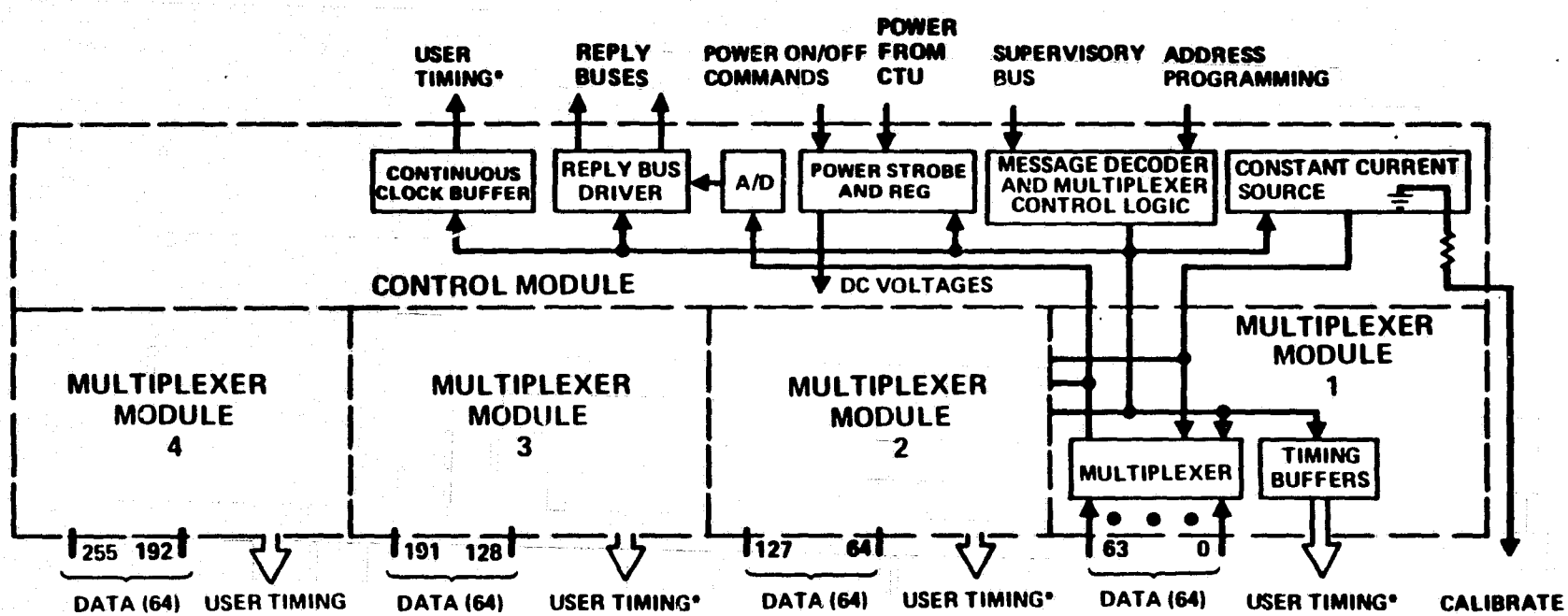

*MAJOR AND MINOR FRAME SYNC, WORD SYNC, SPARE SYNC AND CONTINUOUS CLOCK

ORIGINAL PAGE IS OF POOR QUALITY

826514–36

RTU CHARACTERISTICS

The RTU gathers, formats, and conditions user telemetry data and transmits it to the CTU. The RTU provides frame synchronization signals. Each RTU is pin programmed to have a unique address. When not addressed, the RTU remains in standby mode with only the supervisory bus rate clock and major and minor frame synchronization signals active. When addressed, the RTU decodes the selected data point from the instruction. The unit digitizes analog data and provides a 1 mA constant current source for passive transducers. The overall subsystem achieves an accuracy better than $\pm 0.4\%$ of full scale (5.12V) by using the high performance 8-bit A/D converter and locating the RTU close to the analog signal sources.

The RTU contains four multiplexer modules. Each module handles 1 serial and 63 analog or bilevel telemetry channels.

NUMBER OF MULTIPLEXER MODULES	4 (256 CHANNELS TOTAL)
MODULE INTERFACES	
SERIAL DATA	1 (ENABLE, CLOCK, DATA)
ANALOG/BILEVEL	63 TOTAL
CONDITIONING	1 mA, UP TO 32 CHANNELS
INPUT VOLTAGE RANGE	0 to 5.12 V
RESOLUTION	8 BITS
ACCURACY	<0.4% OF FULL SCALE

TELEMETRY CHANNEL ASSIGNMENTS

The table summarizes the telemetry channels requirements of the subsystems and science instruments. The 4 serial and 252 analog/bilevel channel capability of each RTU, plus the 16 additional serial channels processed directly by the CTU easily meet the despun requirements.

TELEMETRY CHANNEL ASSIGNMENTS

HUGHES

SPUN TELEMETRY CHANNEL

	CLIMATOLOGY			AERONOMY		
	SERIAL TELEMETRY	ANALOG TELEMETRY	BILEVEL TELEMETRY	SERIAL TELEMETRY	ANALOG TELEMETRY	BILEVEL TELEMETRY
ATTITUDE CONTROL	2	24	14	2	24	14
POWER	0	68	8	0	68	8
THERMAL CONTROL	0	23	0	0	23	0
PROPULSION	0	4	3	0	4	3
COMMUNICATIONS	0	0	0	0	0	0
DATA HANDLING	0	0	0	0	0	0
COMMAND	0	0	8	0	0	8
SCIENCE	0	0	0	1	2	2
TOTAL	2	119	33	3	121	35
AVAILABLE (REDUNDANT)	4	252		4	252	

DESPUN TELEMETRY CHANNEL

	SERIAL TELEMETRY	ANALOG TELEMETRY	BILEVEL TELEMETRY	SERIAL TELEMETRY	ANALOG TELEMETRY	BILEVEL TELEMETRY
ATTITUDE CONTROL	0	11	5	0	16	6
POWER	0	2	4	0	10	4
THERMAL CONTROL	0	10	0	0	10	0
PROPULSION	0	0	0	0	0	0
COMMUNICATIONS	0	20	15	0	20	15
DATA HANDLING	0	8	8	0	8	8
COMMAND	0	2	10	2	2	10
SCIENCE	3	2	7	7	14	22
TOTAL	3	55	49	9	80	65
AVAILABLE (REDUNDANT)	20	252		20	252	

ORIGINAL PAGE IS OF POOR QUALITY

DHS KEY FEATURES

The Mars Orbiter DHS, with only minor modifications to flight proven units, provides a fully redundant data processing capability. The configuration of tape recorders and interface buffers allows periodic data playback or real-time telemetry with no interference to continuous storage of instrument data. The channel capacity exceeds instrument serial data sampling and status requirements.

DHS KEY FEATURES

HUGHES

- FULLY REDUNDANT AND CROSS-STRAPPED SUBSYSTEM
- CONTINUOUS SCIENCE DATA PROCESSING
- ADEQUATE PROCESSING CAPABILITY TO MEET SCIENCE SAMPLING REQUIREMENTS
- ALL UNITS FLIGHT PROVEN

PRECEDING PAGE BLANK NOT FILMED

5.5 COMMAND SUBSYSTEM

COMMAND SUBSYSTEM

The Mars Orbiter command subsystem uses a microprocessor-based central unit with distributed remote units. This simplifies instrument interfaces and can operate in stored and real-time modes with autonomous operation of critical functions. The Leasat command subsystem is the basis of the Mars Orbiter command subsystem. The addition of stored command logic is needed for a deep-space mission, and substitution of different remote units avoids the use of key components of the Leasat remotes which are no longer available.

COMMAND SUBSYSTEM

- SPECIFICATIONS/REQUIREMENTS
- COMPONENT LOCATION
- FUNCTIONAL DIAGRAM
- MASS AND HERITAGE
- KEY FEATURES

COMMAND SUBSYSTEM SPECIFICATIONS/REQUIREMENTS

The command subsystem must decode and distribute real-time commands generated by the DSN and detected by the NASA standard transponder. It must also process time-dependent stored commands from a self-contained, programmable command memory. The command subsystem sends serial and pulse commands to control the spacecraft engineering units and the science instruments. Time-critical functions which cannot tolerate the two way light time delay for real time control, such as solar panel deployment, load shedding upon undervoltage detection, and battery charging, must be autonomously controlled based on sensor readings. The subsystem must implement backup configurations and special operating modes if uplink commands are not being received. Finally, the subsystem supplies the control signals and current amplification necessary for the spacecraft squibs, stepper motors, and propulsion valves and thrusters.

COMMAND SUBSYSTEM SPECIFICATIONS/REQUIREMENTS

HUGHES
HUGHES AIRCRAFT COMPANY

ARC SPECIFICATIONS

- DSN COMPATIBILITY
- REAL TIME COMMAND PROCESSING/TM VERIFICATION
- STORED COMMAND PROCESSING
- PULSE AND SERIAL COMMAND OUTPUTS
- SQUIB, POSITIONER AND VALVE OPERATION

REQUIREMENTS FOR RELIABLE SPACECRAFT OPERATION

- AUTONOMOUS CONTROL OF TIME CRITICAL FUNCTIONS
- AUTONOMOUS RECOVERY IF UPLINK LOST

COMMAND SUBSYSTEM COMPONENT LOCATIONS

The command subsystem units are distributed between the despun and spun sections of the spacecraft. Slip ring interfaces connect the spun remote units to the despun command processor. Despun remote units distribute the commands on the despun section. Identical redundant pairs of squib drivers send squib firing pulses on the spun and despun sections. Spun valve and stepper motor driver units deliver the peak current for propulsion functions and solar panel deployment. An internally redundant despun stepper motor driver unit controls the positioning mechanisms.

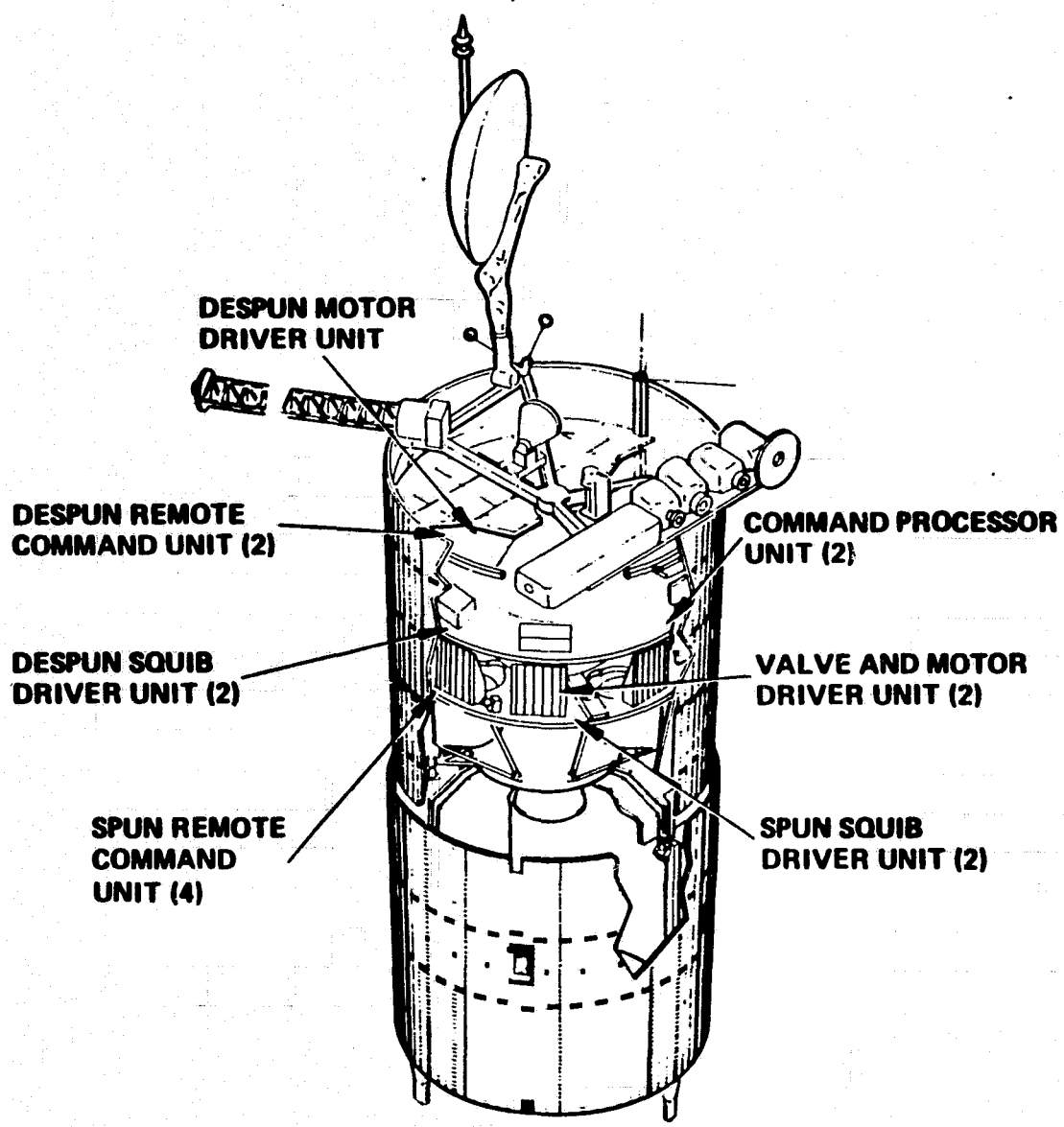

HUGHES

COMMAND SUBSYSTEM COMPONENT LOCATIONS

ORIGINAL PAGE IS OF POOR QUALITY

826514–24

COMMAND SUBSYSTEM FUNCTIONAL DIAGRAM

The command processor unit (CPU) contains a command demodulator which receives cross-strapped real time commands from the transponders. The CPU accumulates the command bits while searching for the synchronization word. Detection of this word starts processing of the command with subsequent verification in the CPU serial telemetry.

The CPU also contains storage for 1024 32-bit commands. These commands are executed according to their time code with the timing reference coming from the CTU-generated spacecraft clock. This clock also provides the wake up pulse for the power strobed CPU. The command memory consists of four MEH-11 RAMs developed for the Galileo probe. The design uses majority voting and error correction to prevent faulty executions due to bit flips. The CPU serial telemetry channel allows the command memory contents to be verified.

CPU output buffers drive the remote command units. The remote units receive biphase data over a dedicated single wire (one wire directly from the CPU to each remote). The remotes then distribute serial and pulse commands to the users as required. Command pulses from the remote units arm and execute squib firings and control the stepper motor driver units.

HUGHES

COMMAND SUBSYSTEM FUNCTIONAL DIAGRAM

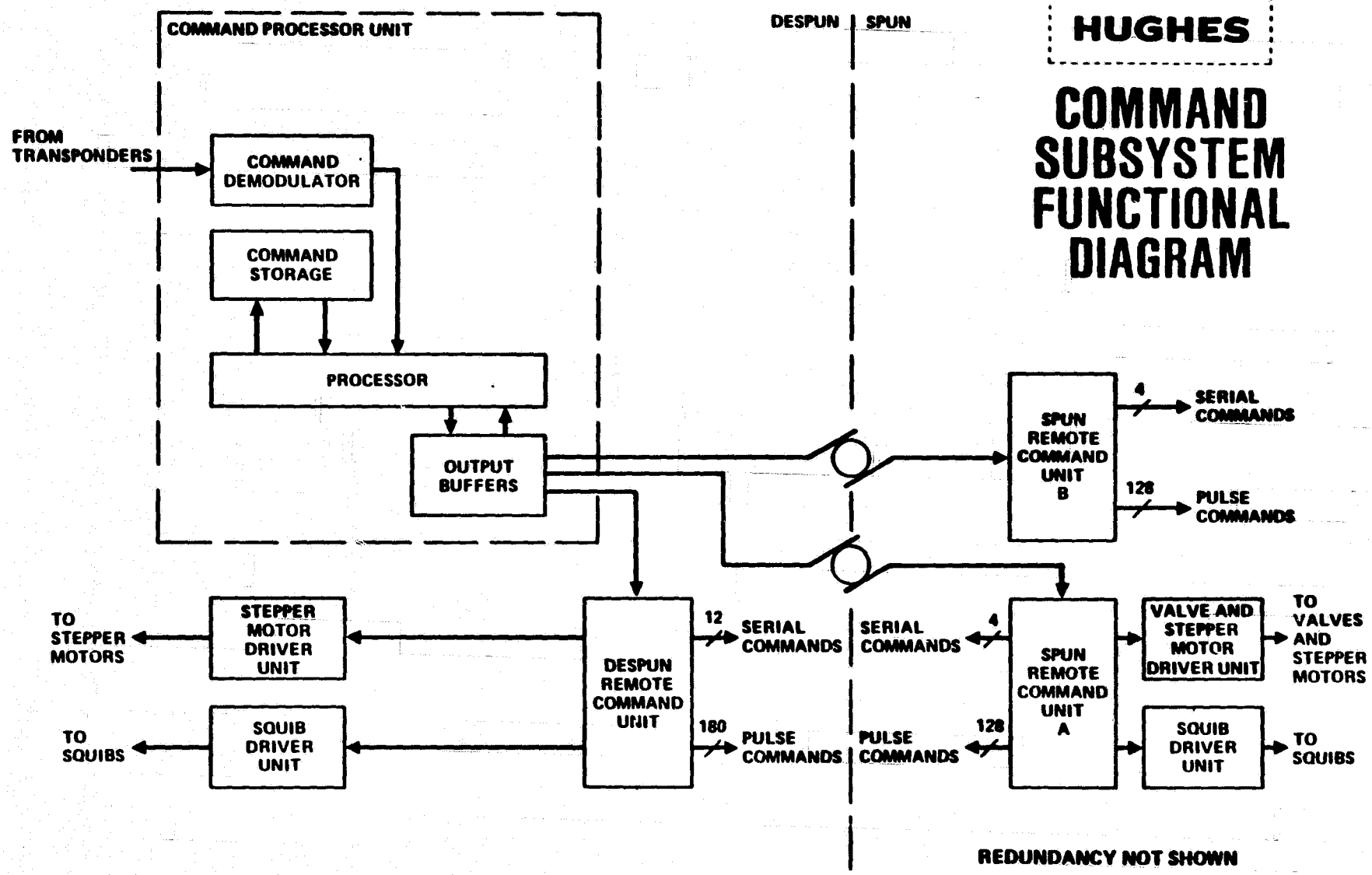

826514–16

ORIGINAL PAGE IS OF POOR QUALITY

COMMAND SUBSYSTEM MASS AND HERITAGE

The command subsystem uses Leasat subsystem architecture with a central processor, distributed remotes, and separate squib and stepper motor drivers. Leasat command processor unit changes allow stored command operation; revised interfaces and software modifications relate to requirements unique to Mars orbiter. The Leasat remote units cannot be used because the main LSI component is no longer available. However, a very similar unit from the classified HS-261 program using available components works as the spun remote.

The despun remote is a new unit based on several existing units, including one currently under internal development. No existing Hughes unit interfaces with the Leasat CPU while providing the positive level commands needed by the science instruments.

The unmodified Intelsat VI squib, stepper motor, and valve driver units control the Mars Orbiter pyrotechnics, positioners, and thrusters.

COMMAND SUBSYSTEM MASS AND HERITAGE

HUGHES

UNIT	MASS, KG		SOURCE	MODIFICATION
	CLIMATOLOGY	AERONOMY		
SPUN				
REMOTE COMMAND UNITS (4)	3.62	SAME	HS 261	NONE
SQUIB DRIVER UNITS (2)	3.72	SAME	INTELSAT VI	NONE
VALVE & STEPPER MOTOR DRIVER UNITS (2)	6.62	SAME	INTELSAT VI	NONE
DESPUN				
COMMAND PROCESSOR UNITS (2)	17.96	SAME	LEASAT	ADD COMMAND STORAGE
REMOTE COMMAND UNITS (2)	2.50	SAME	NEW	—
SQUIB DRIVER UNITS (2)	3.72	SAME	INTELSAT VI	NONE
STEPPER MOTOR DRIVER UNIT	2.40	SAME	INTELSAT VI	NONE
TOTAL	40.54	40.54		

826514-92

COMMAND SUBSYSTEM CHARACTERISTICS

The command processor unit accommodates an uplink command format of 48 bits including a 7 bit polynomial error detection check code, achieving a probability of false command execution of 10^{-9}. A similar check code also protects stored commands from errors.

The processor uses fault detection flags set by the central telemetry unit to override time-critical operations. In particular, it stops solar panel deployment if the three panel drive outputs are not equal. Detection of out-of-limits bus voltage initiates load shedding according to a pre-programmed sequence in the CPU. During battery charging, the CTU monitors cell voltages and battery temperatures; out-of-limit conditions terminate charging.

The CPU also initiates a series of procedures if the uplink signal is lost. These include transfering to the alternate transponder, stepping the high gain antenna, and ultimately reorienting the spacecraft attitude. This logic is never expected to be needed; only a multiple failure will require spacecraft attitude correction.

The remote units provide the serial and pulse command interfaces with the instruments and other subsystems. The spun outputs are negative levels; the despun outputs are positive levels. The four spun and two despun units supply sufficient channel capacity as shown on the following chart.

COMMAND SUBSYSTEM CHARACTERISTICS

HUGHES

COMMAND PROCESSOR UNIT

- MICROPROCESSOR CONTROL, POWER STROBED
- INDIVIDUAL CONNECTION TO COMMAND REMOTES
- STORED COMMAND SEQUENCING BASED ON CLOCK FROM CTU, 1024 32-BIT COMMANDS
- AUTONOMOUS OPERATIONS:
  - SOLAR PANEL DEPLOYMENT (EQUAL MOVEMENT OF THREE DRIVES VERIFIED PRIOR TO INITIATING EACH SET OF DEPLOYMENT STEPS)
  - LOAD SHEDDING UPON UNDERVOLTAGE DETECTION
  - BATTERY OVERCHARGE PROTECTION
  - RECOVERY IF UPLINK LOST

REMOTE UNITS

- SPUN
  - 256 REDUNDANT PULSE COMMANDS
  - 8 REDUNDANT SERIAL COMMANDS
  - NEGATIVE COMMAND LEVELS
- DESPUN
  - 180 REDUNDANT PULSE COMMANDS
  - 12 REDUNDANT SERIAL COMMANDS
  - POSITIVE COMMAND LEVELS

COMMAND SUBSYSTEM CHARACTERISTICS (CONTINUED)

The simple design of the Intelsat VI squib, stepper motor, and valve driver units guarantees both good squib firing performance and no inadvertent firings, and does not disrupt the power bus. Shuttle safety requirements are met with three independent series squib firing switches: 1) a common arm relay, 2) secondary arm relays for each function, and 3) current limited output drivers. Furthermore, the arm relays are inhibited before separation from the integrated propulsion stage.

The driver units use Galileo hybrid drivers, which assure a constant current of 5 to 6 amperes independent of harness resistance. This minimizes bus voltage variation, simplies the harness design, and provides predictable squib, stepper motor, and valve operation.

Parallel units provide redundancy of all functions except for the despun stepper motor driver which is internally redundant. The number of outputs exceeds the needs of the Mars Orbiters, including operation of all propulsion valves and thrusters, the solar panel deployment motors, the antenna and science shelf (aeronomy) pointing mechanisms. The squib drivers trigger all pyrotechnic events, including MOI motor firing and release of the despun section, solar panels, booms, and antennas.

- SQUIB, STEPPER MOTOR, AND VALVE DRIVER UNITS
  - GALILEO HYBRID DRIVERS
  - SIX REDUNDANT DESPUN AND THREE REDUNDANT SPUN STEPPER MOTOR DRIVERS
  - 14 VALVE DRIVERS
  - 19 REDUNDANT DESPUN AND 19 REDUNDANT SPUN SQUIB DRIVERS

COMMAND CHANNEL ASSIGNMENTS

The tables summarize the serial and pulse commands required by the Mars Orbiters. The spun engineering (and aeronomy SWPA) command channel requirements are satisfied by the redundant pair of remote units with a total capability of 256 redundant pulse commands and 8 redundant serial commands. The 180 redundant pulse commands and 12 redundant serial commands meet the despun science instrument and engineering requirements.

COMMAND CHANNEL ASSIGNMENTS

HUGHES

SPUN COMMAND CHANNEL

	CLIMATOLOGY		AERONOMY	
	SERIAL COMMANDS	PULSE COMMANDS	SERIAL COMMANDS	PULSE COMMANDS
ATTITUDE CONTROL	2	6	2	6
POWER	0	48	0	48
THERMAL CONTROL	0	13	0	13
PROPULSION	0	15	0	15
COMMUNICATIONS	0	0	0	0
DATA HANDLING	0	0	0	0
COMMAND	0	60	0	60
SCIENCE	0	0	1	2
TOTAL	2	142	3	144
AVAILABLE (REDUNDANT)	**8**	**256**	**8**	**256**

ORIGINAL PAGE IS OF POOR QUALITY

DESPUN COMMAND CHANNEL

	SERIAL COMMANDS	PULSE COMMANDS	SERIAL COMMANDS	PULSE COMMANDS
ATTITUDE CONTROL	0	2	1	5
POWER	0	8	0	8
THERMAL CONTROL	0	0	0	0
PROPULSION	0	0	0	0
COMMUNICATIONS	0	23	0	23
DATA HANDLING	2	22	2	22
COMMAND	0	38	0	42
SCIENCE	3	8	4	21
TOTAL	5	101	7	121
AVAILABLE (REDUNDANT)	**12**	**180**	**12**	**180**

COMMAND SUBSYSTEM KEY FEATURES

The command subsystem features 20 serial and 436 pulse commands and a 1024 word command memory. The subsystem operates from a real-time uplink at nominally 32 bps and can run indefinitely from the stored command logic. Deriving the stored command timing from the CTU synchronizes the telemetry and command timing. The central, remote, and driver units are fully cross-strapped for the highest reliablility.

The standard, distributed remotes and the common hybrid driver for all current pulse loads simplify the interfaces.

The processor provides safe execution of all time critical sequences even in the presence of failures without any requirement for ground monitoring or control. The processor also implements sequences to recover the uplink if it is lost.

COMMAND SUBSYSTEM KEY FEATURES

HUGHES

- FULLY REDUNDANT CROSS-STRAPPED SUBSYSTEM
- STORED COMMAND EXECUTIONS SYNCHRONIZED TO TELEMETRY TIMING
- EXTERNAL COMMANDS PROCESSED IN PARALLEL WITH STORED COMMANDS
- REMOTE UNITS PROVIDE INSTRUMENT INTERFACES
- HYBRID DRIVERS FOR ALL CURRENT PULSE LOADS
- AUTONOMOUS RECOVERY

PRECEDING PAGE BLANK NOT FILMED

5.6 ATTITUDE CONTROL SUBSYSTEM

ATTITUDE CONTROL SUBSYSTEM (ACS)

This section describes the Mars Orbiter attitude control subsystem, highlighting its operating modes. The primary change to the HS-376 ACS is the substitution of the Intelsat VI attitude control electronics to provide the flexibility required for a deep space mission.

- SPECIFICATIONS/REQUIREMENTS
- COMPONENT LOCATIONS, MASS, AND HERITAGE
- FUNCTIONAL DIAGRAM
- CHANGES TO HS-376 ACS
- STABILIZATION, NUTATION DAMPING AND DESPIN CONTROL MODES
- PERFORMANCE
- KEY FEATURES

ACS SPECIFICATIONS/REQUIREMENTS

The attitude control subsystem must control the climatology instrument pointing to 1.0° on all axes, with 0.2° knowledge. Some aeronomy instruments can tolerate only half these errors. Nutation damping, wobble control, and roll reference affect this instrument pointing, but also have separate specifications. The ACS must damp nutations greater than 0.1°. The ARC specifications have wobble error TBD. The on-orbit dynamic balancing capability of the HS-376 reduces wobble to 0.0005°. A roll reference must fix the orientation of the spinning section of the spacecraft to 1° to satisfy the specifications; however, the nutation control and despin control electronics need a more accurate roll reference.

The spin axis pointing may require no more than one update per week. We assume more frequent update by stored command is permitted. The spin rate may be selected at up to 60 rpm with 0.01% determination.

The attitude control subsystem includes the positioner mechanisms for the solar panel and HGA and the aeronomy orbiter's ram-oriented science shelf. The bearing and power transfer assembly (BAPTA) is also an ACS component. Deployment mechanisms are included in the structure subsystem.

ACS SPECIFICATIONS/REQUIREMENTS

- POINT SCIENCE INSTRUMENTS:
  - CLIMATOLOGY - 1° CONTROL, 0.2^{o} KNOWLEDGE
  - AERONOMY - 0.5^{o} CONTROL, 0.1^{o} KNOWLEDGE
  - DAMPING THRESHOLD < 0.1^{o}
  - WOBBLE < TBD
  - PROVIDE ROLL REFERENCE TO < 1°
- SPIN AXIS ATTITUDE CORRECTIONS < ONCE/WEEK
- SPIN RATE SELECTABLE TBD TO 60 RPM; DETERMINE TO 0.01%
- POINT HGA

ACS COMPONENT LOCATIONS

The figure shows the locations of the ACS components on the aeronomy spacecraft. All retained HS-376 components remain in their original mounting locations; the Intelsat VI attitude control electronics (ACE) mount in the same place as the HS-376 ACE. A star tracker, added to the despun platform, provides an attitude reference on-orbit and during the climatology orbiter's gyrostat-stabilized cruise. A Pioneer Venus-type star scanner determines the cruise attitude of the spin-stable aeronomy orbiter. Except for the star sensors and the HGA and science shelf positioners, the ACS equipment is on the spinning side of the spacecraft.

HUGHES

ACS COMPONENT LOCATIONS

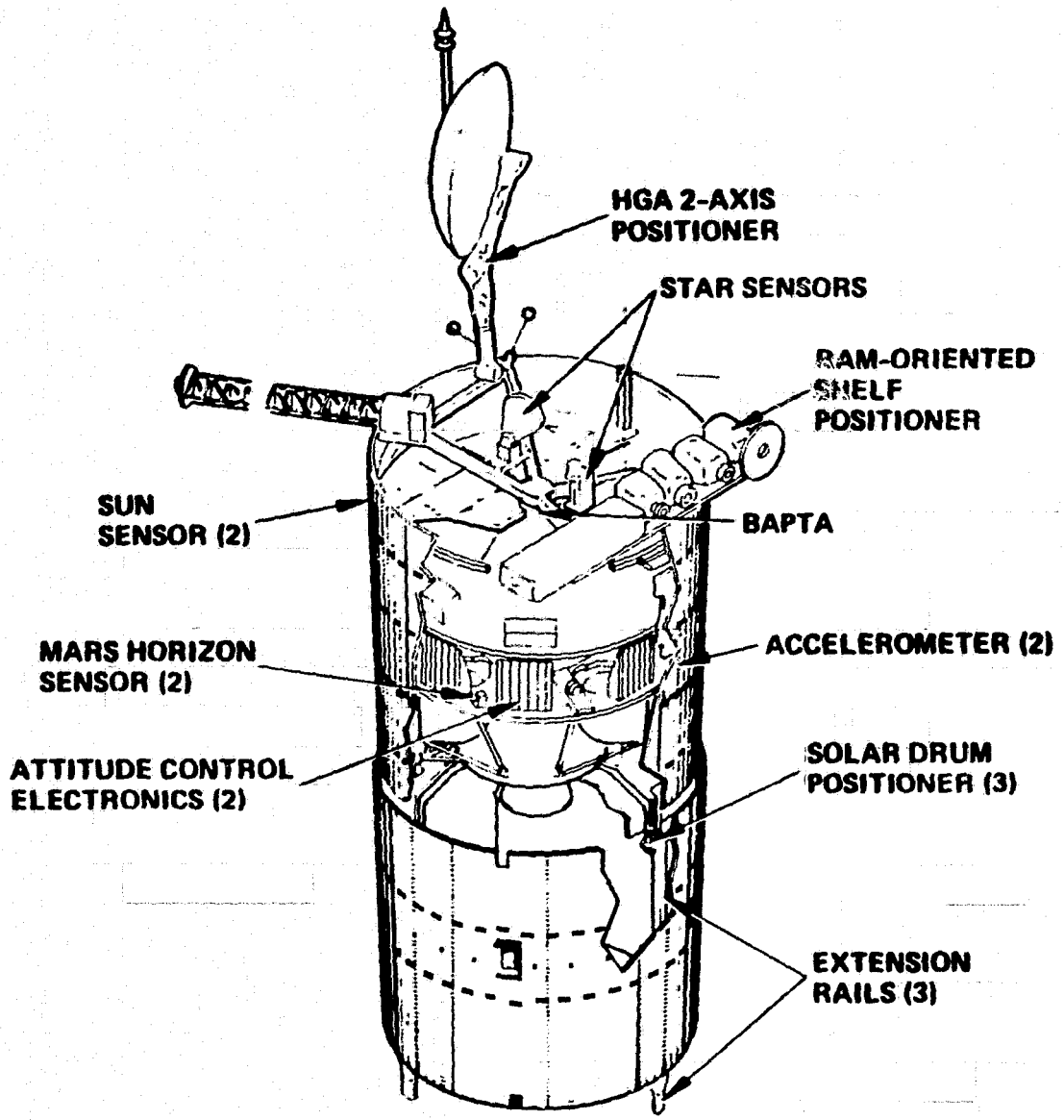

826514–27

ORIGINAL PAGE IS OF POOR QUALITY

ACS MASS AND HERITAGE

The aeronomy orbiter uses the same ACS components as the climatology orbiter, but adds a star scanner and ram-oriented shelf positioner on the despun platform. The spinning part of the ACS uses unchanged HS-376 components except for the substitution of the Intelsat VI ACE. The Leasat BAPTA, identical to the HS-376 version except for its additional index pulse generators, provides the proper interface with the Intelsat VI ACE. Ball Aerospace makes both space-proven star sensors.

ATTITUDE CONTROL SUBSYSTEM MASS AND HERITAGE

HUGHES

UNIT	MASS, KG		SOURCE	MODIFICATION
	CLIMATOLOGY	AERONOMY		
SPUN				
BAPTA – SPINNING	5.11	SAME	LEASAT	NONE
MARS HORIZON SENSORS (2)	0.57	SAME	HS 376	NONE
SUN SENSORS (2)	0.19	SAME	HS 376	NONE
NUTATION ACCELEROMETERS (2)	0.82	SAME	HS 376	NONE
ATTITUDE CONTROL ELECTRONICS (2)	11.80	SAME	INTELSAT VI	NONE
RELATIVE RATE TOGGLE SWITCH	0.08	SAME	HS 376	NONE
SOLAR DRUM POSITIONERS (3)	4.67	SAME	HS 376	NONE
EXTENSION TRACKS (3)	2.14	SAME	HS 376	NONE
DESPUN				
BAPTA – DESPUN	6.04	SAME	LEASAT	NONE
STAR TRACKER	5.00	SAME	CLASSIFIED	NONE
STAR SCANNER	–	2.70	PIONEER VENUS	NONE
HGA AZIMUTH POSITIONER	3.50	SAME	NEW	–
HGA ELEVATION POSITIONER	3.50	SAME	HS 376	NONE
RAM-ORIENTED SHELF POSITIONER	–	3.82	HS 376	NONE
TOTAL	43.42	49.94		

ORIGINAL PAGE IS OF POOR QUALITY

826514-94

ACS FUNCTION DIAGRAM

Four types of sensors, the control electronics, and various actuators form the attitude control subsystem. Spacecraft dynamics complete the control loop.

Accelerometers and horizon, sun, and star sensors monitor the spacecraft attitude and nutation and provide references for despun platform pointing. A star tracker mounted on the despun platform determines the attitude on-orbit. This tracker also provides the second attitude fix during gyrostat-stabilized cruise for the climatology orbiter. The aeronomy orbiter's platform spins during cruise, so it also needs a star scanner. Star sensor data are available in telemetry; the attitude control electronics (ACE) receives inputs from the other sensors.

The ACE uses the sensor data to control attitude, nutation, and platform despin. It can limit nutation using active nutation control (ANC) with thrusters or by using the built-in despin active nutation damping electronics (DANDE) to command the BAPTA motor to torque the despun platform. Processing of horizon or sun sensor data determines platform pointing errors for the BAPTA motor to cancel. A relative rate mode can also control platform despin, but the pointing control degrades without an external reference. The ACE accepts commands to bias the platform pointing and also formats sensor data for spacecraft use or telemetry.

The actuators include the BAPTA, the positioners, and the thrusters. (The thrusters are considered part of the propulsion subsystem.) The BAPTA motor despins the platform and delivers the platform torque commanded by DANDE. Slip rings in the BAPTA carry signals and power across the rotating interface. The BAPTA sends index pulses to the ACE so it can continually read the relative position of the spun and despun parts of the spacecraft.

The other mechanisms include the solar drum positioners, 2-axis HGA positioner, and the ram-oriented shelf positioner on the aeronomy orbiter. Motor drivers in the command subsystem control stepper motors in all the positioners; all positioners also generate readings of their actual positions. Differential driving of the solar drum positioners dynamically balances the spacecraft on orbit to limit wobble to 0.0005°.

Direct commands or the ANC electronics can fire the thrusters. The ANC automatically acts if nutation grows too large for DANDE control.

ACS FUNCTIONAL DIAGRAM

HUGHES

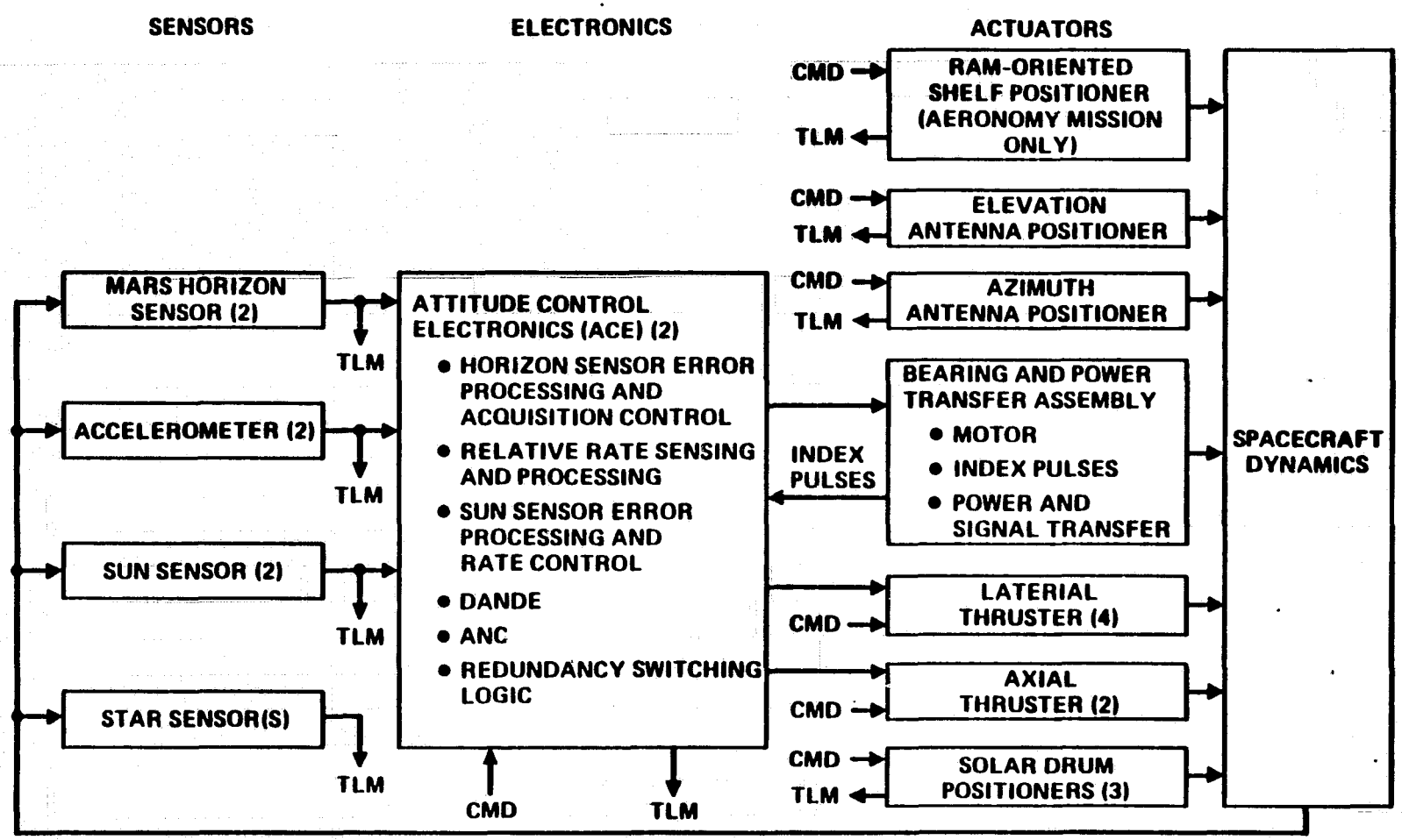

826514–13

ORIGINAL PAGE IS OF POOR QUALITY

CHANGES TO THE HS-376 ACS

Although the operation of the Mars Orbiter ACS resembles the HS-376 operation, changes to the system increase its flexibility for the deep-space missions. These changes include substitution of the Inteslat VI attitude control electronics (ACE) and Leasat BAPTA and added mechanisms and star sensor(s).

During interplanetary cruise, the climatology orbiter cannot point the despun platform relative to a horizon reference and the relative rate control cannot maintain pointing over the long time interval required. On-orbit, the aeronomy orbiter often spends most of its orbit without a horizon in view. In both cases, sun-referenced despin control can accurately point the platform. The HS-376 ACE lacks this mode, but substitution of the Intelsat VI ACE provides it without modifying any components. This ACE directly interfaces with the HS-376 sensors and formats their data for onboard use or telemetry. Unlike the HS-376 version, it also can point the platform to any commanded azimuth angle in horizon mode, which is required for the aeronomy mission. The similarity of operation and interfaces allow the increased capability of the Intelsat VI ACE to be added without affecting the rest of the ACS.

The Intelsat VI ACE requires more BAPTA index pulses than the HS-376 BAPTA provides. However, the physically identical Leasat BAPTA generates the required pulse pattern and substitutes directly for the HS-376 BAPTA.

The Mars Orbiters have a two-axis HGA positioner not used on the HS-376. The aeronomy orbiter also needs an elevation drive on the ram-oriented shelf. Both elevation drives use the HS-376 antenna positioner; the HGA azimuth drive is new.

In either mission, sun and star fixes determine the spacecraft attitude during times when a Mars horizon reference is not available. This requires a star tracker on the despun platform. The aeronomy orbiter's platform spins during cruise, so it also needs a star scanner. The star tracker supplies accurate knowledge of instrument pointing.

CHANGES TO HS-376 ACS

HUGHES
HUGHES AIRCRAFT COMPANY

CHANGE	RATIONALE
INTELSAT VI ATTITUDE CONTROL ELECTRONICS (ACE)	HAS SUN MODE DESPIN CONTROL; PROCESSES SENSOR DATA; 360^0 BIAS IN HORIZON MODE; SIMILAR OPERATION
LEASAT BAPTA	LEASAT BAPTA PHYSICALLY IDENTICAL TO HS-376 BAPTA BUT HAS EXTRA INDEX PULSES REQUIRED BY INTELSAT VI ACE
ADDED MECHANISMS	DIFFERENT POSITIONING OF CHANGED APPENDAGES
ADDED STAR SENSOR(S)	NEED ATTITUDE REFERENCES DURING CRUISE AND SOME ON-ORBIT GEOMETRIES; GIVES ACCURATE DETERMINATION OF INSTRUMENT POINTING

ORIGINAL PAGE IS OF POOR QUALITY

STABILIZATION MODES

Except in cruise, the two orbiters use the same stabilization modes during the mission. The "frisbee" ejection of the spacecraft/injection stage from the Shuttle results in a spin rate of 2 rpm. Spin motors on the stage increase the rate to 30 rpm for the coast away from the Shuttle and the SRM-1 burn. Active nutation control operates while the stage is attached, except during the burn.

After injection and stage separation the aeronomy orbiter is long-term spin-stable (inertia ratio, $\sigma>1$) and needs no nutation control. The STAR-31 forces the inertia ratio of the climatology spacecraft below 1, so it operates as a gyrostat (platform despun) during cruise. Despin active nutation damping limits the nutation during cruise without using propellant; the transients of MOI firing may cause nutation that requires ANC after the burn.

During deployment and on-orbit operation, both Mars Orbiters, like the HS-376, are gyrostat-stabilized. DANDE normally controls nutation, but ANC may operate during deployment.

STABILIZATION MODES

HUGHES
HUGHES AIRCRAFT COMPANY

EVENT	CLIMATOLOGY	AERONOMY
SHUTTLE EJECTION	2 RPM SPIN, ANC	SAME
COAST	30 RPM SPIN, ANC	SAME
INJECTION	30 RPM SPIN, ANC*	SAME
CRUISE	55 RPM GYROSTAT, DANDE	STABLE SPINNER (PLATFORM LOCKED)
MOI	55 RPM GYROSTAT, ANC*	STABLE SPINNER (PLATFORM LOCKED)
DEPLOYMENT	55 RPM GYROSTAT, ANC OR DANDE	SAME
ON-ORBIT	55 RPM GYROSTAT, DANDE	SAME

* ANC OFF DURING BURN - USED AFTER BURN TO REMOVE RESULTING NUTATION

NUTATION CONTROL MODES

The ACS features active nutation control (ANC) at all times and despin active nutation damping (DANDE) when gyrostat stabilized. The figure lists key features of the two modes; the following figure diagrams their operation.

By firing the thrusters at the proper roll rangle, ANC can cancel nutation of 0.15° or larger. This mode automatically begins to operate if nutation exceeds the 0.23° DANDE capture limit. It also removes nutation when the spacecraft is not stable spinner (inertia ratio < 1) and the platform is locked to the spun section, such when the injection stage is attached. Commands to the ACE select either high or low gain ANC.

The DANDE system normally damps nutation in all gyrostat configurations. The DANDE commands the BAPTA Motor to torque the despun platform in the proper phase with nutation. Dynamic imbalance (product of inertia) on the platform couples the resulting angular acceleration into a nutation-correcting torque on the spacecraft. In this way, electrical energy from the solar panel balances the destabilizing energy losses caused by fuel slosh, structural flexing, etc. The jitter resulting from the platform torquing is less than 0.002°.

The effectiveness of DANDE (stabilizing time constant) varies directly with the despun platform product of inertia. This imbalance lies in the plane of the spin axis and is measured relative to the spacecraft c.g.. The system requires about 23 kg-m^2 imbalance on-orbit. However, during cruise, when larger nutation is acceptable, about 7 kg-m^2 is acceptable. The Mars Orbiter design meets the latter constraint without deployments by despun equipment shelf layout. (The shelf is statically balanced to remove platform bending loads during orbit insertion motor firing.) With appendages deployed on orbit, the product of inertia exceeds 50 kg-m^2, resulting in faster nutation damping than other HS-376 satellites.

DANDE operates continually and cancels any detected nutation. Noise in the output of the nutation-sensing accelerometer causes an effective damping threshold (or permits residual nutation) of less than 0.002°.

NUTATION CONTROL MODES

ACTIVE NUTATION CONTROL

- FIRES THRUSTERS TO DAMP NUTATION
  - AFTER SEPARATION FROM SHUTTLE UNTIL STAGE JETTISON
  - AS BACKUP, AT ANY TIME
  - DURING MOI
- DAMPING THRESHOLD OF 0.15° (LOW GAIN) OR 0.48° (HIGH GAIN)
- AUTOMATICALLY ON IF NUTATION EXCEEDS 0.23°

DESPIN ACTIVE NUTATION DAMPING

- TORQUES DESPUN PLATFORM TO DAMP NUTATION (JITTER $< 0.002^{\circ}$)
  - IN ALL GYROSTAT PHASES
  - REQUIRES $\sim$ 7 KG-M^2 PRODUCT OF INERTIA FOR CRUISE
  - REQUIRES $>$ 23 KG-M^2 PRODUCT OF INERTIA FOR ON-ORBIT
  - PRESENT DESIGN HAS $\sim$ 50 KG-M^2 ON-ORBIT
- RESIDUAL NUTATION = 0.002°

STABLE SPINNER

- ENERGY DISSIPATION DAMPS NUTATION

UNSTABLE SPINNER

- ENERGY DISSIPATION ON SPINNING SECTION (ROTOR) DESTABILIZES ENERGY DISSIPATION ON DESPUN SECTION STABILIZES
- ACCELEROMETER OUTPUT IS A SINUSOID AT ROTOR NUTATION FREQUENCY, WITH MAGNITUDE PROPORTIONAL TO θ
- APPLY CORRECTING TORQUE ($\vec{T}$) TO MAKE $\vec{H}$ AND $\vec{\omega}$ COINCIDE WITH SPACECRAFT CENTERLINE (MAKE $\vec{\omega}_T = 0$, ALL MOTION IS $\vec{\omega}_Z$)
- APPLICATION OF CORRECTING TORQUE MUST SYNCHRONIZE WITH ACCELEROMETER OUTPUT AND HAVE PROPER PHASE

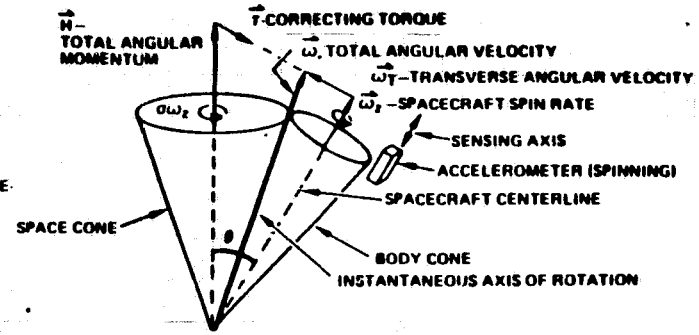

GYROSTAT–ACTIVE NUTATION CONTROL (ANC)

- ACTIVE NUTATION CONTROL USES THRUSTERS TO GENERATE CORRECTING TORQUE
- RADIAL THRUSTERS ARE USED WHEN INJECTION STAGE IS ATTACHED
- AXIAL THRUSTER ARE USED ON ORBIT

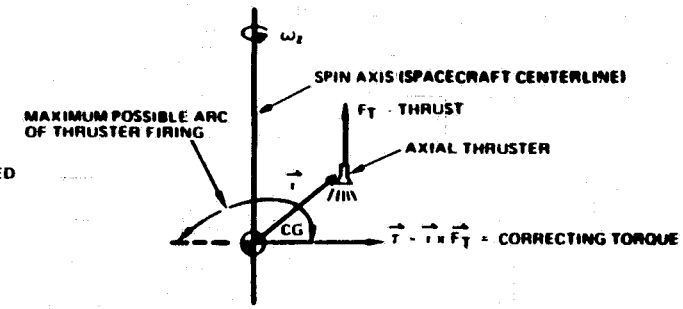

GYROSTAT–DESPIN ACTIVE NUTATION DAMPING

- DESPIN ACTIVE NUTATION DAMPING ELECTRONICS (DANDE) COMMAND THE BAPTA MOTORS TO TORQUE DESPUN SECTION PRODUCT OF INERTIA TO GENERATE CORRECTING TORQUE
- $m_1 = m_2$, TOGETHER THEY REPRESENT PLATFORM PRODUCT OF INERTIA SINCE THEY ARE AT DIFFERENT HEIGHTS ABOVE CG
- BAPTA MOTOR TORQUES PLATFORM IN PHASE WITH ACCELEROMETER OUTPUT. $|\vec{a}_1| = |\vec{a}_2|$, SO INERTIA FORCES ARE EQUAL BUT OPPOSITE $\vec{F}_1 = -\vec{F}_2$
- $|\vec{r}_1| \neq |\vec{r}_2|$ SO $|\vec{T}_1| \neq |\vec{T}_2|$, AND NET CORRECTING TORQUE $\vec{T}$ RESULTS
- BAPTA MOTOR TORQUES PLATFORM IN OPPOSITE DIRECTION WHEN PLATFORM ROTATES 180°
- TOTAL EFFECT NET TORQUE IN PROPER DIRECTION, PLATFORM REMAINS PROPERLY POINTED

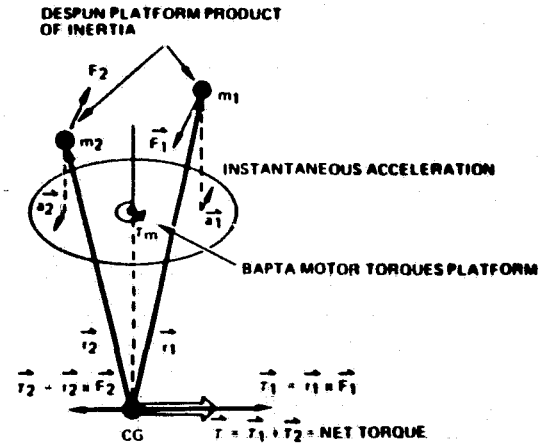

NUTATION CONTROL

PRECEDING PAGE BLANK NOT FILMED

ORIGINAL PAGE IS OF POOR QUALITY

DESPIN CONTROL MODES

For the Mars missions, the attitude control electronics position the platform in horizon tracking, sun tracking, or relative rate modes. A toggle circuit monitors the relative rate between the despun platform and spinning section in all modes. If it detects abnormal operation, it switches to the redundant ACE and BAPTA motor driver.

In horizon tracking mode, the platform points midway between the leading and trailing horizon edge pulses. Commands can bias this nadir-tracking position to any angle. The horizon mode is the primary despin control mode for the climatology orbiter with its nadir tracking requirement. The circular orbit allows the spinning sensors to detect a horizon at all times.

Sun tracking mode points the platform relative to the detected sun line. Any angle may be selected and maintained to 0.08°. This is the primary despin mode for the aeronomy orbiter, which often lacks a horizon reference in its elliptical, polar orbit. Sun mode also controls the pointing of the climatology orbiter's platform during cruise.

Relative rate mode senses the difference in speed between the spun and despun sections by measuring the interval between BAPTA index pulses. The ACE command adjustments in the BAPTA motor speed to correct any errors. Relative rates of up to 90 rpm may be selected and the platform may spin if desired. Because relative rate mode uses no external references, rotor spin speed errors cause the pointing to drift. It normally provides despin control for short periods without critical pointing requirements, such as during initial despin or deployment. It will automatically operate if sun or horizon mode fails.

HORIZON SENSOR MODE (PRIMARY MODE FOR CLIMATOLOGY)

- POINTS PLATFORM HALF WAY BETWEEN ANGLE OF DETECTED HORIZON EDGE PULSES
  - DURING SCIENCE OPERATION
- CAN BE BIASED $\pm$ 180° FROM NADIR

SUN MODE (PRIMARY MODE FOR AERONOMY)

- POINTS PLATFORM RELATIVE TO DETECTED SUN PULSE
  - ON-ORBIT IN DAYLIGHT
  - DURING CRUISE

RELATIVE RATE MODE

- MEASURES RATE DIFFERENCE BETWEEN PLATFORM AND ROTOR AND ADJUSTS BAPTA MOTOR SPEED
  - SHORT-TERM POINTING
  - AS BACKUP, AT ANY TIME
- NOT NORMALLY USED

ATTITUDE STABILIZATION PERFORMANCE

Both orbiters use gyrostat stabilization with a rotor spin rate of 55 rpm on-orbit. Active nutation control (ANC) limits nutations above the 0.23° DANDE capture limit if required. Normally DANDE continuously nulls nutation; the accelerometer noise results in a 0.002° residual nutation. On-orbit dynamic balancing, by differentially driving the three solar drum positioners to slightly tip the outer drum, reduces wobble to 0.0005°.

ATTITUDE STABILIZATION PERFORMANCE

HUGHES

• STABILITY	DUAL-SPIN (GYROSTAT) WITH ACTIVE NUTATION DAMPING; AERONOMY ORBITER STABLE SPINNER DURING CRUISE
• DAMPING TIME CONSTANT	ANC-3 SEC, DANDE-21 SEC, TYPICAL
• DAMPING THRESHOLD	ANC, LOW GAIN - 0.15^{0} ANC, HIGH GAIN - 0.48^{0} DANDE - 0.002^{0}
• WOBBLE	0.0005^{0}
• SPIN RATE	55 RPM (ASSUMED FOR POINTING ESTIMATES); 30 RPM DURING SRM-1 FIRING; 25 to 90 RPM POSSIBLE; PLATFORM DESPUN
• DESPUN PLATFORM REFERENCE	BAPTA INDEX PULSE GENERATORS; MARS HORIZON, SUN, OR RATE HOLD REFERENCE

ATTITUDE DETERMINATION PERFORMANCE

The star tracker, located on the despun platform, supplies the most accurate attitude reference with its 0.05° total error. Because of the tracker's high accuracy, the error in the sensor alignment relative to the science instruments dominates the total knowledge error. On the aeronomy orbiter, the 0.0025° quantization of the ram-oriented shelf slightly increases this misalignment.

ATTITUDE DETERMINATION PERFORMANCE

HUGHES

- STAR TRACKER GIVES BEST ACCURACY:

	CLIMATOLOGY	AERONOMY
STAR SENSOR ERROR (3σ)	0.0028^0	0.0028^0
ALIGNMENT ERROR (3σ)	0.05^0	0.05^0
POSITIONER QUANTIFICATION ERROR	——	0.0013^0
RSS TOTAL	0.050^0	0.050^0

- ROLL REFERENCE ERROR = 0.015^0

PLATFORM DESPIN CONTROL-SHORT-TERM, STEADY-STATE ERRORS

The table lists ten factors that contribute to short-term despun platform pointing errors. Most of the error values come from existing equipment or the breadboarded Intelsat VI attitude control electronics, and so are well known. The larger jitter of the horizon sensor causes the error in horizon-referenced despin control mode to exceed the sun-referenced errors by 0.010°.

Error Source	Platform LOS Error, deg 3σ Reference Mode		Remarks
	Sun	Horizon	
1) Control electronics limit cycle	0.013	0.013	Residual LOS limit cycle due to 0.015° measurement quantization
2) Inertial reference pulse jitter	0.004	0.002	Control loop response to 0.005°, 3σ sun pulse jitter or 0.08°, 3σ (end of life) worst case earth sensor pulse jitter
3) Index pulse pole-to-pole misalignment	0.007	0.007	Control loop response to 0.015°, 3σ mechanical misalignment of pole pieces
4) Index pulse processing jitter	0.003	0.003	Response to 10 mV zero crossing noise with 4 V/deg zero crossing slope
5) Bearing torque noise-broadband	0.002	0.002	Worst case torque noise allocation of 1.8 x 10^{-4} N-m^2/Hz over 1 Hz bandwidth; 2X MARISAT, OSO-8 measured noise
6) Bearing torque noise	0.005	0.005	RSS'd response to sinusoids
7) Accelerometer noise	0.004	0.004	Response to 1 mg rms accelerometer noise over 10 Hz bandwidth, processed through DANDE
8) Spin axis wobble crosscoupling	0.001	0.001	Dynamic crosscoupling through platform product of inertia
9) Residual nutation crosscoupling	0.001	0.001	Dynamic crosscoupling through platform product of inertia
10) Sun angle correction	0.006	NA	Short-term tracking error due to discrete 0.011° bias command quantization
RSS Total	0.018	0.028	

ORIGINAL PAGE IS OF POOR QUALITY

ATTITUDE CONTROL PERFORMANCE SUMMARY

The platform design control pointing error is the sum of the short-term residual constraint and long-term, and diurinal errors. The previous table listed the sources of steady-state errors. Constant and long-term errors include shaft encoder and sensor misalignment, sensor biases, initial spin rate error, and aging of electronics. Biasing the platform pointing angle removes all these errors, except for a residual error of 0.0055°, equal to half the bias quantization. Diurnal errors include temperature-dependent variations in rotor spin speed, sensor charateristics, and BAPTA bearing friction. Adding these estimated errors predicts a 3σ platform pointing error (along-track error in the climatology mission) of 0.029° in sun mode and 0.061° in horizon mode.

The 0.2 lb_f-sec minimum thruster impulse bit causes a quantization of 0.026° in precessing the spin axis. However, vector addition of small precessions could reduce this quantization at the expense of increased propellant. These minimum thruster firings may have an impulse uncertainty of 5-10%.

The combination of highly-accurate despun platform positioning and fine precession control allows the instrument pointing to closely follow any mode.

Immediately following an attitude determiniation, ohly the errors described above will limit the attitude control accuracy. However, the modeled attitude disturbances differ from the real ones, causing the spin axis pointing error to increase with time. Of these disturbances, the nodal precession of the climatology mission is known perfectly but the solar torque has an uncertainty of about 10%, or 0.005° per day. Aerodynamic torques on the aeronomy spacecraft are very uncertain; the desired periapsis density profile and diurnal changes in the atmosphere affect the value of this large disturbance torque. The spin axis pointing error therefore depends on the frequency of the attitude determination updates.

ATTITUDE CONTROL PERFORMANCE SUMMARY

HUGHES

- PLATFORM DESPIN CONTROL:

	PLATFORM LOS ERROR, 3σ	
	SUN MODE	HORIZON MODE
SHORT TERM, STEADY-STATE	0.018^0	0.028^0
RESIDUAL CONSTANT AND LONGTERM	0.0055^0	0.0055^0
DIURNAL	0.0056^0	0.0277^0
TOTAL	0.029^0	0.061^0

- PRECESSION QUANTIZATION OF 0.026^0 LIMITS ACCURACY OF POSITIONING SPIN AXIS
- MODELING ERRORS OF $\sim 0.005^0$/DAY IN SOLAR TORQUE AND TBD IN AERODYNAMIC TORQUE INCREASE SPIN AXIS POINTING ERROR BETWEEN DETERMINATION UPDATES

ACS KEY FEATURES

The Mars Orbiters retain the HS-376 attitude control subsystem, with the substitution of the Intelsat VI attitude control electronics. The fully-redundant subsystem features two modes of nutation control and despin control using sun, horizon, or relative rate references. Added star sensor(s) provide a second accurate attitude fix in orbit or during cruise. The subsystem meets all science instrument and high gain antenna pointing and knowledge requirements.

ACS KEY FEATURES

HUGHES

- MARS ORBITERS USE HS-376 ATTITUDE CONTROL SUBSYSTEM
  - FULLY REDUNDANT SUBSYSTEM
  - HS-376 COMPONENTS AND MOUNTING LOCATIONS (EXCEPT ACE)
  - DANDE OR ANC NUTATION CONTROL
- CHANGES PROVIDE THE ADDITIONAL FLEXIBILITY REQUIRED
  - CAN OPERATE IN SUN, MARS HORIZON, OR RELATIVE RATE DESPIN MODES
  - INTELSAT VI ACE MOUNTS IN HS-376 ACE LOCATIONS
  - STAR SENSOR(S) ADDED TO DESPUN PLATFORM
  - SUN AND HORIZON SENSOR DATA AVAILABLE ONBOARD AND IN TELEMETRY; STAR SENSOR DATA TELEMETERED WITH INSTRUMENT DATA
- POINTING MEETS REQUIREMENTS

ORIGINAL PAGE IS OF POOR QUALITY

PRECEDING PAGE BLANK NOT FILMED

5.7 POWER SUBSYSTEM

POWER SUBSYSTEM

The following section describes the power subsystem for the Mars Orbiters. Except for an added instrument power interface unit, the subsystem is entirely from HS-376. This section also details the power budget and derivation of the solar panel layout.

- SPECIFICATIONS/REQUIREMENTS
- COMPONENT LOCATIONS, MASS, AND HERITAGE
- FUNCTIONAL DIAGRAMS
- ASSUMPTIONS
- POWER BUDGET
- SOLAR PANEL LAYOUT
- PERFORMANCE
- KEY FEATURES

POWER SUBSYSTEM SPECIFICATIONS/REQUIREMENTS

In addition to powering the spacecraft bus, the subsystem must supply 28 volts ±10% to the instrument payload. The climatology instruments require 59 watts during the day and 55 watts with the FIS off over the unlit half of the planet. The aeronomy instruments draw 46.5 watts for 15 minutes on either side of periapsis, less at other times in the orbit.

Batteries must tolerate a single-cell failure. Because of the long time required for the ground to switch off units, the spacecraft must autonomously shed loads in sequence if an overload occurs.

POWER SUBSYSTEM SPECIFICATIONS/REQUIREMENTS

HUGHES

- SUPPLY 59W (DAY) AND 55W (ECLIPSE) TO CLIMATOLOGY INSTRUMENTS
- SUPPLY POWER UP TO 46.5W TO AERONOMY INSTRUMENTS
- INSTRUMENT POWER AT 28V ± 10%
- SEALED, OVERCHARGE PROTECTED, SINGLE-FAILURE TOLERANT BATTERIES
- AUTOMATIC OVERLOAD PROTECTION

POWER SUBSYSTEM COMPONENT LOCATIONS

Both spacecraft use the same power subsystem. Except for the instrument power interface unit (IPIU) all subsystem components are on the spinning side of the spacecraft. The Mars Orbiters use Palapa-B solar panels, the largest in the HS-376 line. Two Westar (HS-376) 19.5 amp-hour batteries power the spacecraft during eclipse. Each consists of four 8-cell packs arranged around the edge of the spinning equipment shelf. The power control electronics units attach to the same shelf.

Slip rings carry power across the BAPTA to the despun platform. The IPIU regulates and distributes power from the despun bus to the science payload.

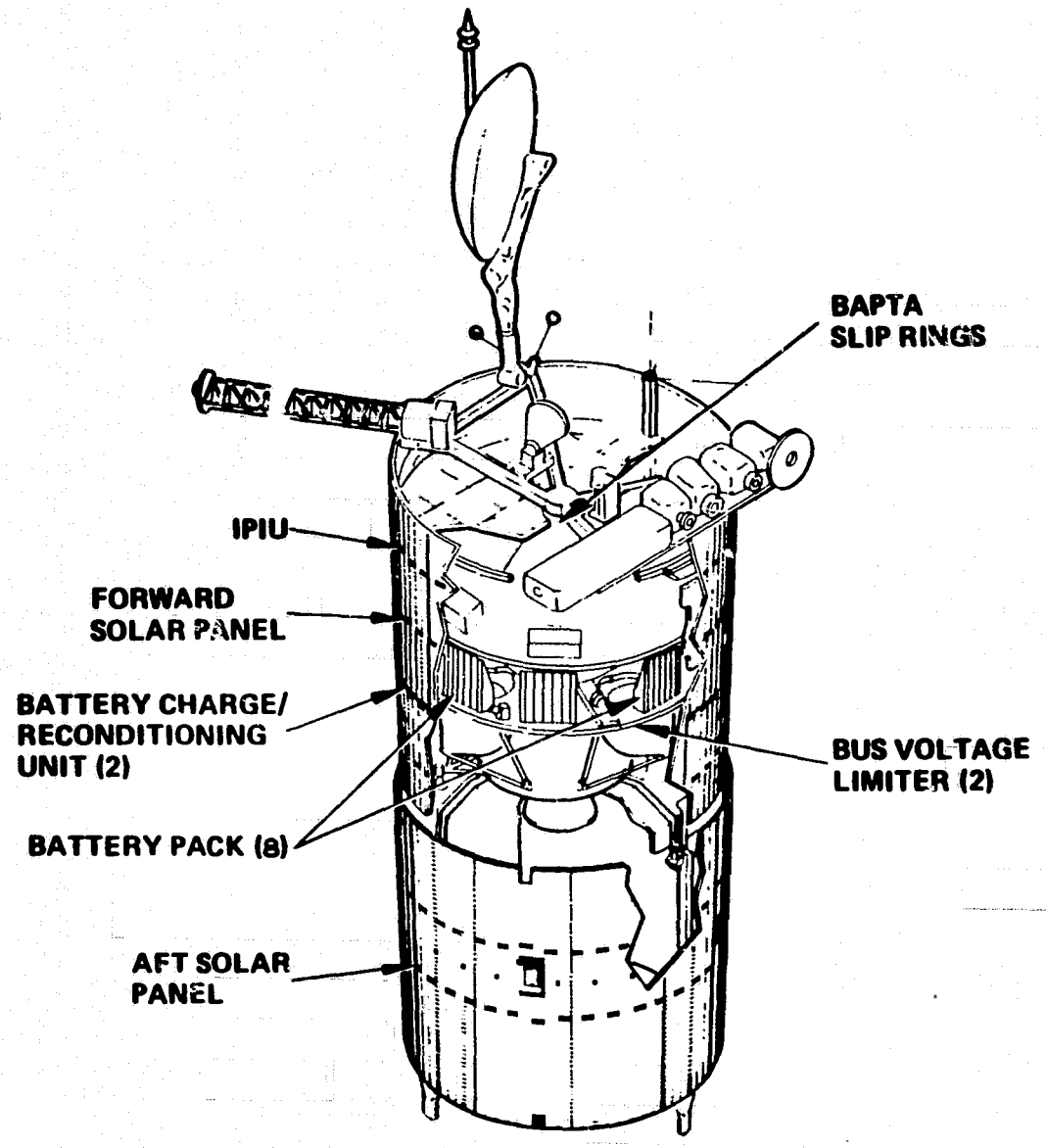

HUGHES

POWER SUBSYSTEM COMPONENT LOCATIONS

826514–26

ORIGINAL PAGE IS
OF POOR QUALITY

POWER SUBSYSTEM MASS AND HERITAGE

All components except the IPIU come directly from HS-376. The Palapa arrays power the spacecraft. Both forward and aft arrays have new layouts of their K7 high-efficiency cells. The new layout accounts for the colder temperatures at Mars and the larger charge arrays required by the more frequent eclipses. This is a minor change; all HS-376 spacecraft have different string layouts to match their different power requirements. As shown later, the Westar batteries have excess capacity for the Mars missions, but their design already mates with the rest of the subsystem. The other spun units are common to most HS-376 spacecraft.

The IPIU is unchanged from its Galileo Probe application.

POWER SUBSYSTEM MASS AND HERITAGE

HUGHES

UNIT	MASS, KG		SOURCE	MODIFICATION
	CLIMATOLOGY	AERONOMY		
SPUN				
FORWARD SOLAR CELL ASSEMBLY	18.14	SAME	HS 376 (PALAPA)	CELL LAYOUT
AFT SOLAR CELL ASSEMBLY	18.27	SAME	HS 376 (PALAPA)	CELL LAYOUT
BUS VOLTAGE LIMITERS (2)	2.77	SAME	HS 376	NONE
DISCHARGE CONTROLLER	6.41	SAME	HS 376	NONE
CHARGE/RECONDITION UNIT	0.82	SAME	HS 376	NONE
CURRENT SENSOR SHUNTS (8)	0.50	SAME	HS 376	NONE
BATTERY CELL VOLTAGE MONITORS (2)	0.48	SAME	HS 376	NONE
BATTERY PACKS (8)	43.89	SAME	HS 376 (WESTAR)	NONE
DESPUN				
INSTRUMENT PIU	2.06	SAME	GALILEO PROBE	NONE
TOTAL	93.34	93.34		

826514-96

POWER SUBSYSTEM FUNCTIONAL DIAGRAM

The HS-376 spacecraft features a dual-bus power subsystem, with half of the loads attached to each bus. In its communications application, the HS-376 divides its payload and redundant bus units so a failure of either bus drops only half. However, the Mars Orbiter science instruments cannot be conveniently divided this way and half of the array cannot support the whole spacecraft. Therefore, the dual bus does not provide backup to bus shorts (which are extremely unlikely) but does provide compatibility with the HS-376 design. Each bus uses redundant electronics and can tolerate any single component failure. The discharge controllers can connect both batteries to either bus if desired or if an open-cell failure occurs. (The more probable battery failure is a shorted cell, any two of which reduce the battery voltage to a still-acceptable level.)

A main array and battery power each bus. Tap limiters on the array bound the maximum output voltage as solar cell temperature change causes it to fluctuate. A bus voltage below 29.1 volts at the battery causes the discharge controller to automatically place the batteries on the bus. (This happens at the start of each eclipse.) This arrangement holds the bus within a volt of its nominal value at all times.

A boost charge array of 21-volt strings connects in series with part of the main array to charge the batteries via the charge/recondition unit. The charge array current equals the charge current; but the entire main array remains connected to the bus, powering the battery charge like any other load. In times of greater solar incidence, fewer main array cell strings supply the required charge current, and more strings can power the bus. Fewer strings are also required in the charge array; however the charge array never feeds the spacecraft bus.

Both busses connect to the spinning and despun loads. The loads are balanced between the busses. The IPIU attaches the science loads to one of the busses.

As shown in the diagram, sensors monitor critical points in the system. A detected overload causes the command subsystem to shed loads as required. The command subsystem also monitors battery cell voltages and battery temperatures during charging and stops the process if out-of-limit conditions are observed.

POWER SUBSYSTEM FUNCTIONAL DIAGRAM

HUGHES

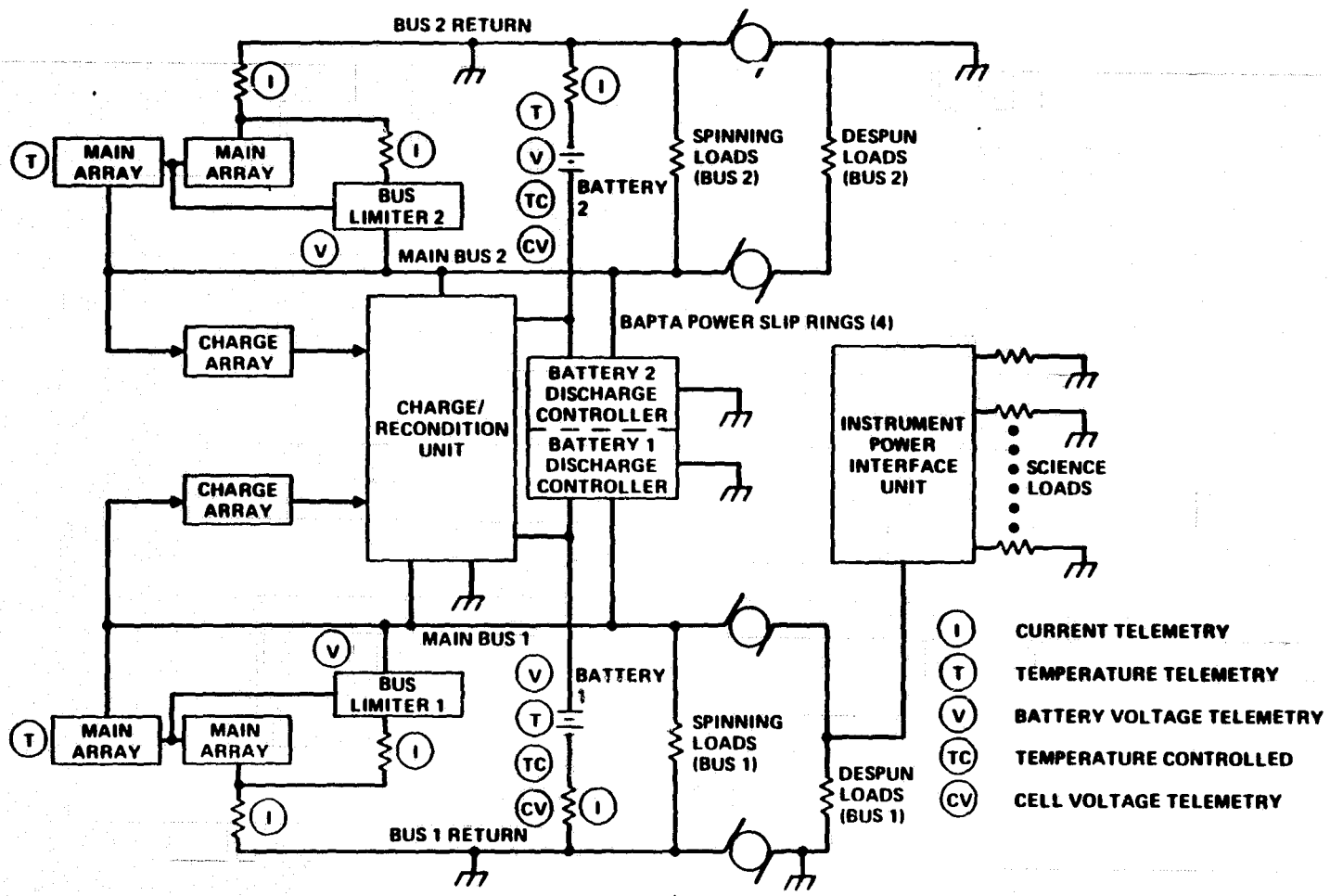

826514–11

ORIGINAL PAGE IS OF POOR QUALITY

INSTRUMENT POWER INTERFACE UNIT

The instrument power interface unit (IPIU) regulates and distributes the despun bus power to the science instruments. Power enters the unit through redundant fuses and passes to the regulators. Either of the diode-isolade regulators can power the instruments. An overvoltage protector disconnects a regulator if it fails. Tight bus voltage control on the HS-376 minimizes the demands on the regulators. Filters remove transients on both the input and output. Sensors monitor the power fed to the instruments.

Redundant six-pole, single throw relays connect the regulated power to the instruments via fuses. In addition, resistors protect the secondary fuses from transients. The climatology instruments use only half of the six outputs; two of the outputs each connect to two of the eight despun instruments on the aeronomy spacecraft.

IPIU FUNCTIONAL DIAGRAM

HUGHES

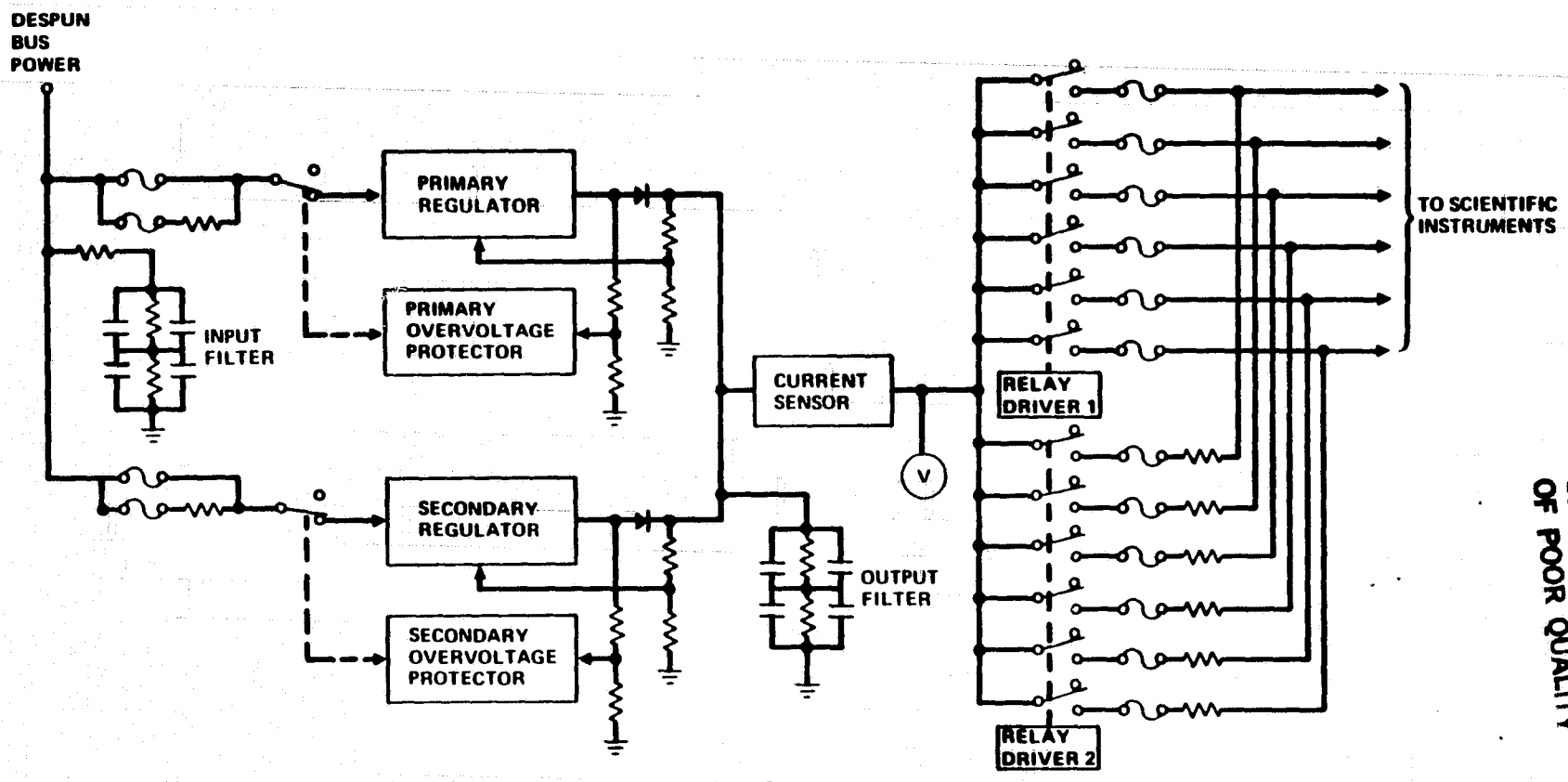

826514–33

ORIGINAL PAGE IS
OF POOR QUALITY

POWER BUDGET ASSUMPTIONS

Because of its higher power requirements during more frequent eclipses, the climatology mission drives the solar panel layout and power budget. Like most HS-376 spacecraft, the Mars Orbiters will have a new solar array layout. This minor change compensates for the colder temperature, dimmer sun, and greater charge requirements in Mars orbit.

Solar cell voltage, which determines the number of cells in a series string, increases at colder temperatures; cell (string) current is proportional to the illumination. The warmest possible panel temperature (1°C on forward array, -15°C on aft array) occurs at Mars perihelion and the 22.5° (1:30) sun angle. Current output varies during the Mars year; the lowest panel current occurs at 1.65 AU and a 35° sun angle.

This preliminary design assumes 2.2 X 6.2 cm K7 cells, the most common HS-376 cell type. Other HS-376 hardware assumptions include 85% charge and 90% discharge efficiences; two 19.5 A-hr, 39.0 volt batteries; and Palapa solar panels, the largest in the HS-376 line. Unlike Palapa, the Mars Orbiters need no mirror band around the inner drum, so cells cover this area. All listed power numbers assume 28 volts; the actual calculations use current values, so the effects of harness drops, etc., are included. The bus actually maintains a voltage of 29.1 to 30 volts.

The eclipse time affects the battery depth of discharge, the boost charge array size, and the portion of main array current used for charge. Calculations conservatively assume a 40 minute eclipse during the worst-case 1.89 hour orbit; the orbits with slightly longer eclipses (up to 41 minutes) have better solar incidence. The power budget assumes that the transmitter (and FIS) operate during the entire daylight period rather than just the required half-orbit.

CLIMATOLOGY MISSION DRIVES POWER DESIGN

HUGHES

HARDWARE ASSUMPTIONS

- CELL VOLTAGE SIZED FOR 1.38 AU, 22.5^{o} SUN ANGLE (INNER DRUM AT 1°C, OUTER DRUM AT -15°C)
- ASSUME 2.2 cm x 6.2 cm K7 CELLS
- 85% CHARGE EFFICIENCY, 90% DISCHARGE EFFICIENCY
- TWO WESTAR BATTERIES: 19.5 A-HR, 39.0 V EACH
- PALAPA SOLAR PANEL (8.9 m^2 CROSS SECTION); NO MIRROR
- ALL POWERS AT 28 V

MISSION ASSUMPTIONS

- WORST-CASE CLIMATOLOGY ORBIT HAS 40 MIN ECLIPSE AND 73.4 MIN OF DAYLIGHT
- TRANSMITTER AND FIS ON DURING ENTIRE DAYLIGHT PERIOD

PANEL ASSUMPTIONS

- PANEL CURRENT VARIES DURING MARS YEAR; WORST CASE AT 1.65 AU DISTANCE AND 35° SUN ANGLE

POWER BUDGET

Both orbiters draw the same subsystem power. A 10% contingency on the bus guards against any growth in power consumption. Budgets assume the specified maximum science instrument powers and for the aeronomy orbit a worst case daylight periapsis.

Climatology

The eclipse loads determine the required main array charge power, about 100 watts for the climatology mission. Totaling these values gives the spacecraft daylight power consumption. The main array layout described on the following pages produces about 387 watts in the worst case. This leaves the climatology orbiter with a 30 watt worst-case reserve above the 10% contingency near Mars' aphelion and the corresponding 35° sun angle. This margin becomes greater than 250 watts as Mars nears perihelion and sunlight strikes the panels more directly. The longest climatology mission eclipses cause the spacecraft to draw about 9.5% of the energy stored in the two 19.5 amp-hour batteries.

Aeronomy

The longer daylight time available to recharge the batteries of the aeronomy orbiter allows a much smaller charge current. The normal sun angle generates 467 watts in the main array at aphelion which results in a margin of almost 180 watts, or two-thirds of the required power.

POWER BUDGET, WATTS

HUGHES

SUBSYSTEM	POWER, W			
	CLIMATOLOGY		AERONOMY	
	DAYLIGHT	ECLIPSE	DAYLIGHT	ECLIPSE
COMMUNICATIONS	76.1	25.2	76.1	25.2
DATA HANDLING	45.5	25.5	45.5	25.5
COMMAND	15.0	15.0	15.0	15.0
ATTITUDE CONTROL	33.0	33.0	33.0	33.0
POWER	1.9	3.3	1.9	3.3
THERMAL CONTROL	10.0	20.0	10.0	20.0
TOTAL	181.5	122.0	181.5	122.0
CONTINGENCY (10%)	18.1	12.2	18.1	12.2
BUS TOTAL	199.6	134.2	199.6	134.2
SCIENCE	59.0	55.0	46.5*	21.3*
BATTERY CHARGE (MAIN ARRAY)	101.0	–	37.7	–
SPACECRAFT TOTAL	360.6	184.5	283.8	155.5
MIN MAIN ARRAY OUTPUT AT 28 V	387.2	–	467.0	–
POWER RESERVE/DEGRADATION ALLOWANCE	27.6	–	183.2	–
BATTERY DOD	–	9.5%	–	0 TO 15.2%

*MAX POWER WITH PERIAPSIS IN DAYLIGHT, 90 MIN ECLIPSE

ORIGINAL PAGE IS OF POOR QUALITY

826514–101

SOLAR PANEL LAYOUT

The HS-376 uses two types of solar arrays: a main array to power the bus, including battery charge, and a 21-volt boost charge array. This charge array connects in series with part of the main array to raise the voltage to the required level for battery charging.

The power budget on the preceeding page does not include charge array since it does not supply the bus. However, the charge uses 16% of the available panel area. Charging must replace the 3.72 A-hrs drawn from the batteries via the discharge controller during eclipse. To do this before the following eclipse at 85% efficiency requires 3.58 amps. In the worst-case orbit, 72 strings of 40 cells supply this current, producing 75.2 watts at the charge array's 21 volts. The "battery charge" entry in the budget does not include this power. The calculations assume all the charge array on the warmer forward panel; a portion could be on the aft panel if enough main array remained there for cruise power.

The remaining cells on the forward array form 111 strings of 59 cells. In the worst-case orbit, it takes 72 of these strings to supply the 3.58 amps for battery charge (101 watts). The colder aft array has 164 strings of 55 cells each. The whole main array delivers 387 watts to the bus. During cruise, with only the aft array exposed, the panel generates about 350 watts.

The panel layout uses 16% of the cell area for boost charge array. In the worst-case orbit 26% of the main array current charges the batteries, so 39% of the total panel area cannot support other daylight loads.

Similarly, the aeronomy spacecraft generates 467 watts in its main array. The longer orbit reduces the required charge current, so the charge array is oversized.

CLIMATOLOGY SOLAR PANEL LAYOUT

HUGHES

- BOOST CHARGE ARRAY
  - 3.58 AMPS OBTAINED BY 72 STRINGS OF 40 CELLS ON FORWARD PANEL
  - CHARGE ARRAY OUTPUT = 75.2 W AT 21 V
- MAIN ARRAY
  - FORWARD ARRAY HAS 111 STRINGS OF 59 CELLS: 72 OF THESE STRINGS SUPPLY BATTERY CHARGE CURRENT
  - AFT ARRAY HAS 164 STRINGS OF 55 CELLS
  - TOTAL MAIN ARRAY OUTPUT = 286 W FOR BUS AND SCIENCE, 101 WATTS FOR CHARGE AT 28 V
- 16% OF PANEL IS BOOST CHARGE ARRAY AT 21 V; 39% OF PANEL AREA USED FOR BATTERY CHARGE

POWER SUBSYSTEM PERFORMANCE

Both Mars Orbiters use HS-376 power electronics with Westar batteries and Palapa solar arrays. The IPIU is the only addition to the HS-376 fully redundant subsystem. The minimum power margin (climatology) is 27.6 watts above 10% contingency; the battery depth of discharge stays below 15.2% (aeronomy). The solar panel can support full spacecraft operation after only 20 days of drift orbit; before that science instrument or transmitter duty cycles must be restricted. The stored aft panel provides greater than 150 watts of power reserve during cruise.

POWER SUBSYSTEM PERFORMANCE (CLIMATOLOGY)

HUGHES

- MINIMUM MARGIN ABOVE 10% CONTINGENCY:

  OPERATIONAL ORBIT = 28W

  CRUISE > 150W

- MAXIMUM BATTERY DEPTH OF DISCHARGE = 9.5%

- PARTIAL SCIENCE OPERATION POSSIBLE IMMEDIATELY AFTER CIRCULARIZATION; FULL OPERATION AFTER 31 DAYS OF DRIFT

POWER SUBSYSTEM KEY FEATURES

Both Mars Orbiters retain the dual-bus HS-376 power subsystem, including Palapa solar arrays and Westar batteries. Although the spacecraft cannot tolerate a total bus short, the subsystem is fully redundant without modifying the HS-376 components. A new string layout optimizes the arrays for operation at Mars.

An instrument power interface unit, added to the despun platform, distributes power to the science payload. The command subsystem sheds loads in sequence if an undervoltage/overload condition occurs.

POWER SUBSYSTEM KEY FEATURES

HUGHES

- HS-376 POWER SUBSYSTEM RETAINED FOR MARS ORBITERS
  - FULLY REDUNDANT SUBSYSTEM
  - USES HS-376 DUAL BUS DESIGN
  - USES STANDARD HS-376 COMPONENTS AND LOCATIONS
- IPIU, ADDED ON DESPUN PLATFORM, DISTRIBUTES AND REGULATES INSTRUMENT POWER
- COMMAND SYSTEM AUTONOMOUSLY SHEDS LOADS FOR OVERLOAD PROTECTION

IMPACT OF INCREASED POWER REQUIREMENT

Extending the aft (outer) solar panel can provide additional power if desired. Structure on the PAM-D perigee stage limits the length of the aft panel for the HS-376 vertical launch in the Shuttle. For the horizontally-launched Mars missions, the integrated propulsion stage does not have this constraining structure. The panel length does not change the stack length in the Shuttle bay for extensions up to 36 inches. Longer extension requires a shallower-angle adapter which will use more bay.

Each inch of extension gains about 3 watts in the worst-case climatology orbit; each watt costs about $3,000.

IMPACT OF INCREASED POWER REQUIREMENT

HUGHES

- AFT PANEL CAN BE LENGTHENED TO PROVIDE GREATER INSTRUMENT POWER OR POWER RESERVE
- INTEGRATED PROPULSION STAGE FOR INJECTION AVOIDS MECHANICAL CONSTRAINTS OF PAM-D
- STRETCH DOES NOT CHANGE LENGTH IN SHUTTLE BAY
- COST ~ $3000/WATT

5.8 THERMAL CONTROL SUBSYSTEM

ORIGINAL PAGE IS
OF POOR QUALITY

PRECEDING PAGE BLANK NOT FILMED

THERMAL CONTROL SUBSYSTEM

This section describes the Mars Orbiter thermal control subsystem, detailing the requirements, design approach, components, and resulting solar panel and internal temperatures. Both orbiters use the same thermal control design; only the MOI motor insulation and science instrument blankets differ between the two spacecraft.

- SPECIFICATION/REQUIREMENTS
- DESIGN APPROACH
- MASS AND HERITAGE
- PERFORMANCE

THERMAL CONTROL SUBSYSTEM SPECIFICATIONS/REQUIREMENTS

Spacecraft thermal control must keep all components within acceptable temperature ranges. Science instruments can tolerate -40° to +50°C when off and -20° to +40°C while operating. All bipropellant must stay at least 5°C above freezing. Protection for the Mars orbit insertion motors must ensure acceptable temperatures during cruise and prevent thermal gradients in the propellant grain.

Spacecraft thermal control cannot require specific Shuttle orbiter attitudes before release of the spacecraft.

THERMAL CONTROL SUBSYSTEM SPECIFICATIONS/REQUIREMENTS

HUGHES

- MAINTAIN SPACECRAFT UNIT TEMPERATURES WITHIN ACCEPTABLE LIMITS, SCIENCE INSTRUMENT TEMPERATURES BETWEEN -40° AND $+50^{\circ}$ C NONOPERATING AND -20 TO $+40^{\circ}$C OPERATING.
- IMPOSE NO SHUTTLE ATTITUDE REQUIREMENTS
- MAINTAIN PROPELLANT 5°C ABOVE FREEZING
- MAINTAIN MOI MOTOR TEMPERATURES WITHIN REQUIRED LIMITS

THERMAL CONTROL SUBSYSTEM APPROACH

The Mars Orbiter thermal control subsystem uses the same passive design approach and many of the same components as the HS-376 subsystem. However, the added science instruments, colder Martian environment, lower internal power dissipation, and different solid motor on the climatology mission require some minor design changes. Extra insulation inside the inner solar panel drum isolates the spacecraft's equipment bay from the cold of deep space and minimizes internal thermal transients during the rapid eclipse cycles in Mars orbit. Adding this insulation and eliminating the HS-376 mirror band minimizes the required heater power, even though the despun equipment dissipates much less heat than the HS-376 communications payloads. Added blankets cover the exposed portion of the STAR-31 MOI motor on the climatology orbiter, preventing temperature gradients in the propellant grain.

Blankets also protect the externally-mounted science instruments. Replacement heaters maintain minimum temperature when the instruments are not operating. The composite construction of the X-beam and the stiff science instrument shelf prevent thermal distortion of structure which could cause instrument pointing errors. In the climatology orbit, selection of the spin axis direction allows the spacecraft body to shade the platform-mounted instruments.

Spin axis orientation controls the maximum solar panel temperature during cruise. The solar panel string layout assumes a cell voltage corresponding to the warmest possible temperature in Mars orbit. A warmer solar panel near Earth would produce less voltage; tilting the spin axis toward the sun during the first part of cruise reduces the solar intensity and cools the panel to maintain the required voltage. Current and power output match the best-case Mars orbit values for the aft (outer) panel while the spin axis is tilted.

THERMAL CONTROL SUBSYSTEM APPROACH

HUGHES

- BASIC HS-376 THERMAL CONTROL APPROACH (THERMAL BARRIERS, BLANKETS, HEATERS, NO LOUVERS)
  - ADDED SOLAR ARRAY LINER INSULATES INTERIOR IN COLDER MARTIAN ENVIRONMENT, DAMPS THERMAL TRANSIENTS
  - BLANKETS PROTECT STAR-31 MOI MOTOR
  - ELIMINATING HS-376 MIRROR BAND MATCHES LOWER INTERNAL POWER DISSIPATION
- SCIENCE INSTRUMENT THERMAL CONTROL FOLLOWS SAME APPROACH
  - BLANKETS AND REPLACEMENT HEATERS MAINTAIN INSTRUMENT TEMPERATURES
  - COMPOSITE X-BEAM AND STIFF SCIENCE SHELVES MINIMIZE THERMAL EFFECTS ON INSTRUMENT POINTING
  - CLIMATOLOGY ORBITER SPIN AXIS POINTED TO ANTI-SOLAR SIDE OF ORBIT PLANE, SHADING INSTRUMENTS
- CRUISE SOLAR PANEL TEMPERATURE CONTROLLED BY TILTING SPIN AXIS

THERMAL CONTROL SUBSYSTEM COMPONENT LOCATIONS

The figure shows the locations of the key thermal control components on the aeronomy orbiter. Most of the design comes directly from the HS-376 spacecraft.

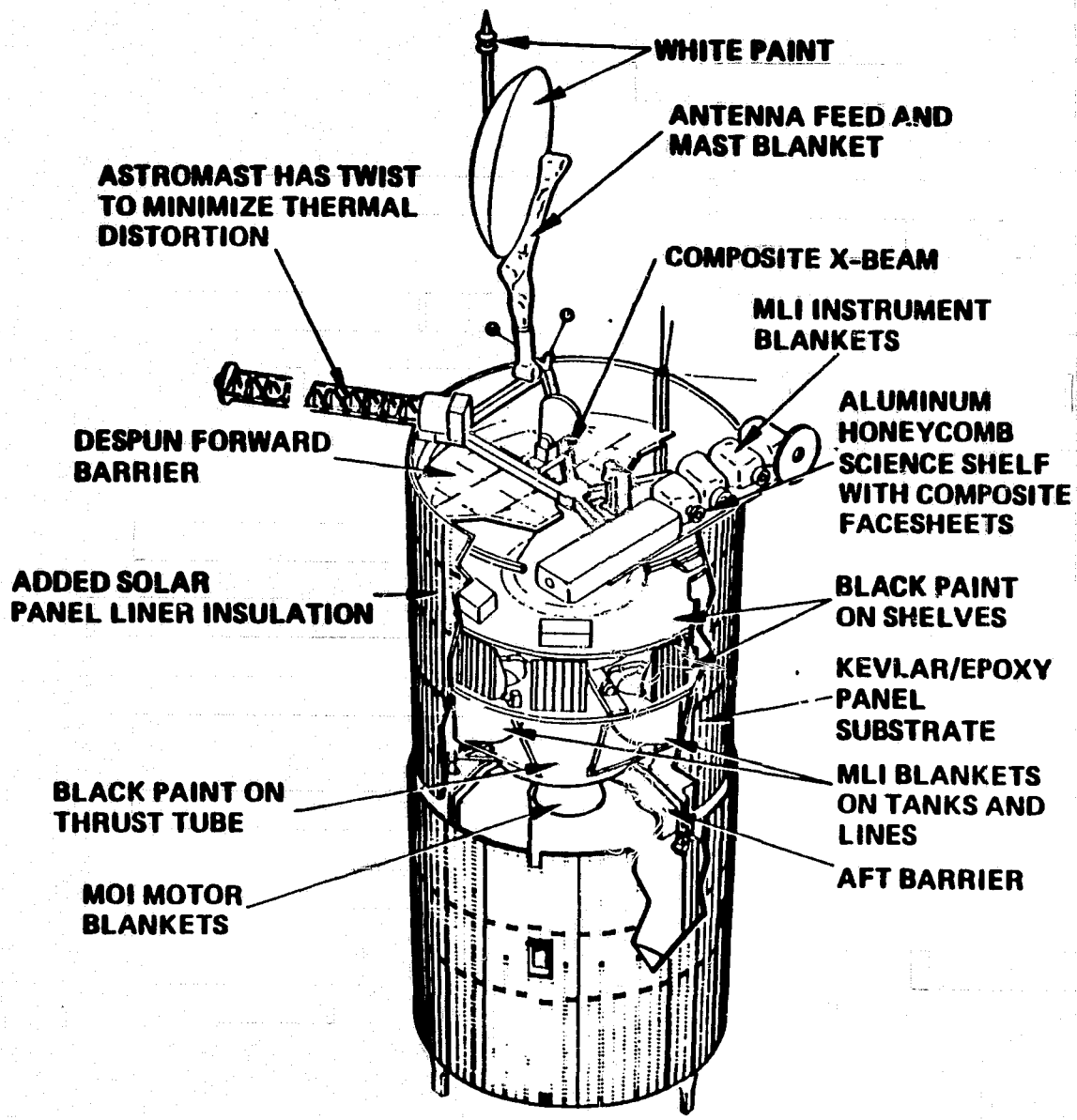

HUGHES

THERMAL CONTROL SUBSYSTEM COMPONENT LOCATIONS

ORIGINAL PAGE IS OF POOR QUALITY

826514–49

THERMAL CONTROL SUBSYSTEM MASS AND HERITAGE

Most of the thermal control components come from the HS-376 design. New blankets protect the science instruments and additional blankets line the solar drum. Extending the solid motor blanket protects the exposed portion of the STAR-31 climatology MOI motor. Only the instrument and motor blankets differ between the two orbiters.

?

THERMAL CONTROL SUBSYSTEM MASS AND HERITAGE

HUGHES

UNIT	MASS, KG		SOURCE	MODIFICATION
	CLIMATOLOGY	AERONOMY		
SPUN				
AFT BARRIER	2.39	SAME	HS 376	NONE
AFT SOLAR PANEL SKIRT	0.53	SAME	HS 376	NONE
FWD SOLAR ARRAY LINER	2.00	SAME	NEW	–
THRUST TUBE INSULATION	0.84	SAME	HS 376	NONE
MOI MOTOR BLANKET AND HEATER	3.74	1.27	HS 376	SIZE/NONE
TANK AND LINE BLANKETS AND HEATERS	2.40	SAME	HS 376 (SBS 1A)	NONE
MOI MOTOR CAVITY BARRIER	0.29	SAME	HS 376	NONE
ETA BLANKETS	0.12	SAME	HS 376	NONE
BATTERY HEATER CONTROLLERS (2)	1.00	SAME	HS 376	NONE
SWITCH ASSEMBLIES (3)	0.59	SAME	HS 376	NONE
HORIZON SENSOR SHIELDS (2)	0.11	SAME	HS 376	NONE
BLACK PAINT	0.71	SAME	HS 376	NONE
TEMPERATURE SENSORS	0.14	SAME	HS 376	NONE
BATTERY INSULATION	0.12	SAME	HS 376	NONE
UNIT THERMAL CONTROL	1.00	SAME	NEW	–
DESPUN				
FWD BARRIER AND SUPPORT	2.29	SAME	HS 376	NONE
ANTENNA THERMAL CONTROL	1.00	SAME	NEW	–
SCIENCE BLANKETS	1.00	2.00	NEW	–
TOTAL	20.27	18.80		

826514–98

THERMAL CONTROL SUBSYSTEM PERFORMANCE

The temperatures shown result from the thermal design approach just described. The warmest solar panel occurs at 1.38 AU and 22.5° sun angle (from perpendicular to the spin axis) for the climatology orbiter, or normal sun angle for the aeronomy spacecraft. Coldest panel temperatures assume 1.67 AU distance and 45° or normal sun angle, respectively. The actual phasing of distance and sun angle may reduce the temperature range of the climatology solar panel. The warm panel temperatures determine the minimum solar cell voltage used for the panel layout.

The thickened forward solar array liner isolates the equipment bay and limits the temperature swing to 22°C. This range can be shifted; the 7° to 32°C range specified here satisfies the equipment temperature requirements.

- SOLAR PANEL TEMPERATURES:

  INNER DRUM: -37 TO 1°C CLIMATOLOGY,
  -39 TO 7°C AERONOMY

  OUTER DRUM: -53 TO -15°C CLIMATOLOGY,
  -55 TO -4°C AERONOMY

- SPACECRAFT EQUIPMENT BAY TEMPERATURES:

  7 TO 32°C (45 TO 90°F)

PRECEDING PAGE BLANK NOT FILMED

5.9 INTEGRATED PROPULSION STAGE

INTEGRATED PROPULSION STAGE

The integrated propulsion stage consists of a solid rocket motor (SRM-1), its aluminum carrier support structure, and two STAR-6 solid rockets which spin up the ejected stage and spacecraft to 30rpm. Five moment-free attach points connect the carrier to the cradle. Two carrier outriggers provide reaction points for the frisbee ejection spring and pivot. United Technologies will qualify the SRM-1 for propellant loads from 4850 to 9700 kg. The fully loaded SRM-1 meets the requirements of the Mars Orbiter missions. Five Intelsat VI, four Leasat, and four SAL spacecraft will demonstrate the Hughes-patented frisbee deployment technique before it is needed for Mars Orbiter. The design details of the integrated propulsion system are Hughes proprietary.

SIMPLE, SPINNING INTEGRATED PROPULSION SYSTEM FEATURES SHUTTLE FRISBEE DEPLOYMENT

HUGHES

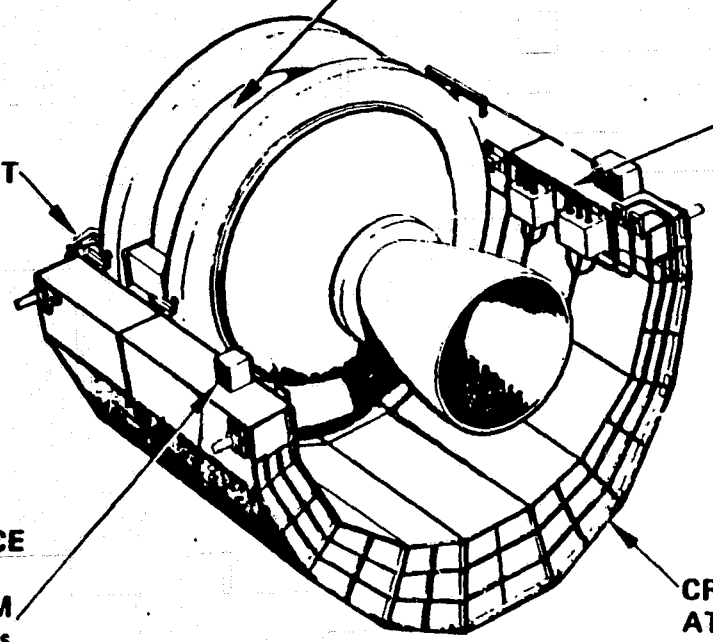

ORIGINAL PAGE IS OF POOR QUALITY

826514-50

6. OTHER PROGRAM ELEMENTS

OTHER PROGRAM ELEMENTS

The Mars Orbiter Study concentrates on defining the climatology and aeronomy spacecraft designs described in the previous section. We have defined the other program elements listed on the facing page in sufficient detail to estimate the program cost.

The program management element assumes a staff and function equivalent to the Pioneer Venus and Galileo Probe programs.

Cost estimates for the system engineering, experiment integration, and product assurance elements follow the precedent of comparable programs including Pioneer Venus, Galileo Probe, GOES, and HS 376. The science integration cost includes Hughes management and maintenance of instrument interfaces and support of experimenter requirements. The quality procedures are standard to HS 376 with government surveillance as appropriate for the Mars Orbiter program.

The following three charts discuss details of the support equipment, integration and test, and launch support elements.

OTHER PROGRAM ELEMENTS

HUGHES

- PROGRAM MANAGEMENT
- SYSTEM ENGINEERING, INSTRUMENT INTEGRATION, AND PRODUCT ASSURANCE
- SUPPORT EQUIPMENT
- INTEGRATION AND TEST
- LAUNCH SUPPORT

SUPPORT EQUIPMENT

The support equipment consists of the system test equipment (STE) which uses equipment developed for the HS 376 product line and the instrument test set (ITS) available from the Galileo Probe program. Other than some software changes required for Mars Orbiter, the test equipment requires no modifications.

The HS 376 STE is a modularized, palletized configuration capable of operating and testing the Mars Orbiter spacecraft through all system test and launch operations. The STE can use PDP 11/44 computer control to automate testing, spacecraft operation, data gathering, and data reduction.

The Galileo Probe ITS also can use PDP 11/44 computer control to process and display instrument data in the mission configuration. The command controller, telemetry-simulator, and power control panel simulate all spacecraft/instrument interfaces. The critical command inhibit panel prevents generating detrimental commands without additional operator intervention. A patch panel reconfigures the connection interfaces for different instruments.

SUPPORT EQUIPMENT

- SYSTEM TEST EQUIPMENT FROM HS-376
  - PDP 11/44 CONTROL
  - COMMAND GENERATOR/TELEMETRY PROCESSOR
  - POWER GENERATOR AND MONITOR
  - ATTITUDE CONTROL SIMULATOR
- INSTRUMENT TEST SET FROM GALILEO PROBE
  - PDP 11/44 CONTROL AND DATA PROCESSOR
  - COMMAND CONTROLLER
  - TELEMETRY SIMULATOR
  - POWER CONTROL
  - CRITICAL COMMAND INHIBIT
  - PATCH PANEL

INTEGRATION AND TEST

The Mars Orbiter test program assumes a protoflight spacecraft. The test types and level of effort follow our Pioneer Venus experience. Testing includes vibration and solar thermal vacuum exposure, solar panel and appendage deployment, mass properties checkout, and spacecraft balance.

The Mars Orbiter uses qualified HS-376 structure, eliminating the need for a structural qualification model. The few new or modified units require qualification testing. The thermal breadboard model will verify that the revised passive thermal design is appropriate for the Mars environment.

INTEGRATION AND TEST

HUGHES

- PROTOFLIGHT SPACECRAFT
- NEW UNITS QUALIFICATION TESTED
- THERMAL BREADBOARD MODEL

LAUNCH SUPPORT

Launch support includes mission operations through delivery. Before launch, activities match those planned for Intelsat VI including Shuttle integration and in-bay testing. After launch, ground operations begin following ejection from the Shuttle and injection by the IPS, which is controlled by a spacecraft sequencer. Post injection operations include telemetry verification, attitude determination, and the first trajectory correction maneuver ten days after injection.

LAUNCH SUPPORT

HUGHES

- STANDARD INTEGRATION AND IN-BAY TESTING PER INTELSAT VI
- NO OPERATIONS FROM LAUNCH THROUGH INJECTION
- CHECKOUT AND ATTITUDE UPDATE FOLLOWING INJECTION
- HANDOVER SPACECRAFT AFTER FIRST TCM

7. PRE-PHASE B STUDY REQUIREMENTS

INFORMATION REQUIRED FOR PHASE B STUDY-SCIENCE

The current study assumes certain values or guidelines for undefined parameters which fundamentally affect the Mars Orbiter design. These parameters should be clearly specified before a Phase B study to properly validate a design before full scale development.

A clear definition of the science objectives is necessary to the mission and spacecraft design. A significant climatology drift period increaes the mission cost. Definition of science operation during drift allows a final cost tradeoff including mission operations. The optimum aeronomy orbit and arrival date depend on the precision of approaching the subsolar and antisolar points. Similarly, density sampling requirements size the orbit parameters and sustenance propellant needs. Radio science, if required, extends operating time per orbit and sizes antenna pointing requirements and command sequencing.

Current instrument uncertainties could affect mechanical layout, electrical interfaces, and spacecraft data return capability. Spacecraft power and mass reserves, tape recorder size, and data playback sequences also depend on the instrument requirements. The current design accommodates the baseline payloads and climatology Options 1 and 2. The high combined data rate of the GRS and MSM of Option 3 require increased tape recorder capability. These data rate requirements should be reviewed.

INFORMATION REQUIRED FOR PHASE B STUDY - SCIENCE

HUGHES
HUGHES AIRCRAFT COMPANY

SCIENCE DEFINITION

- DEFINE SCIENCE OPERATION DURING CLIMATOLOGY DRIFT ORBIT
- QUANTIFY AERONOMY REQUIREMENT FOR SUBSOLAR/ANTISOLAR MAPPING
- SPECIFY ATMOSPHERE DENSITY PROFILE FOR AERONOMY SAMPLING
- DEFINE REQUIREMENT FOR RADIO SCIENCE (IF ANY)

INSTRUMENT DEFINITION

- REFINE ALL INSTRUMENT CHARACTERISTICS
- REVIEW HIGH GRS AND MSM COMBINED DATA RATE (CLIMATOLOGY OPTION 3)

ORIGINAL PAGE IS
OF POOR QUALITY

INFORMATION REQUIRED FOR PHASE B STUDY - MISSION

The study Orbiter designs meet all currently-specified mission requirements. However, modifications to the mission requirements, coupled with the science and instrument uncertainties addressed on the previous page, could change the validity of the Orbiter designs. The communications uplink and downlink frequencies depend strongly on DSN constraints or flexibility. Specification of DSN capability should allow a tradeoff of S-band only, X-band only, and dual S-, X-band frequencies. Selecting a data handling strategy requires definition of the need or desire to recover data if a scheduled DSN station becomes unavailable.

The current design, including three tape recorders, gives full data return with any single component failure. A single recorder failure with a less expensive two tape recorder design results in partial data loss. Specifying the data return redundancy requirements determines the hardware design, especially the need for a third tape recorder.

Flying both the climatology and the aeronomy mission reduces the average cost per mission. A final sequence requires definition of the preferred launch year for each mission.

The Shuttle thermal environment may constrain the spacecraft thermal design. This environment must be specified.

INFORMATION REQUIRED FOR PHASE B STUDY - MISSION

HUGHES
HUGHES AIRCRAFT COMPANY

- SPECIFY DSN CONSTRAINTS ON UPLINK AND DOWNLINK FREQUENCY
- SPECIFY SPACECRAFT RESPONSE TO DSN OUTAGE
- SPECIFY REDUNDANCY PHILOSOPHY FOR DATA RETURN
- DEFINE TWO MISSION SEQUENCE
- DEFINE STS THERMAL ENVIRONMENT

SUGGESTED INVESTIGATIONS PRIOR TO PHASE B STUDY

The previous two charts describe information needed to best perform a Phase B Mars Orbiter design study. Additional recommended investigations can confirm assumptions made during the current study. Phase B could continue to use these assumptions, but that could change during full scale development.

The 8 hour DSN pass constraint limits the time available for command loads, special real time modes, and recovery from DSN outages. Increasing the period to 9 or 10 hours significantly enhances these functions with little or no increase to the operations cost.

The 100 m/sec planet protection ΔV specification gives extremely stable orbits. A reduced requirement probably can satisfy planetary quarantine requirements, with the saved propellant allowing a longer mission, or shortening the climatology mission drift phase.

Meeting specified orbit motion and density sampling on the aeronomy mission depends on Mars gravitational effects. Better definition of Mars gravitational distribution provides higher confidence in meeting these specifications.

Better specification of the aeronomy atmospheric density requirements will determine the mission design. This design process also requires better knowledge of the diurnal, geographic, and seasonal density variations.

SUGGESTED INVESTIGATIONS PRIOR TO PHASE B STUDY

HUGHES

- REVIEW 8 HR DSN PASS CONSTRAINT
- REVIEW PLANETARY QUARANTINE REQUIREMENT
- REVIEW MARS GRAVITATIONAL SPECIFICATION
- DEFINE EXTREME ATMOSPHERIC DENSITY MODELS