WYLE
LABORATORIES SCIENTIFIC SERVICES & SYSTEMS GROUP

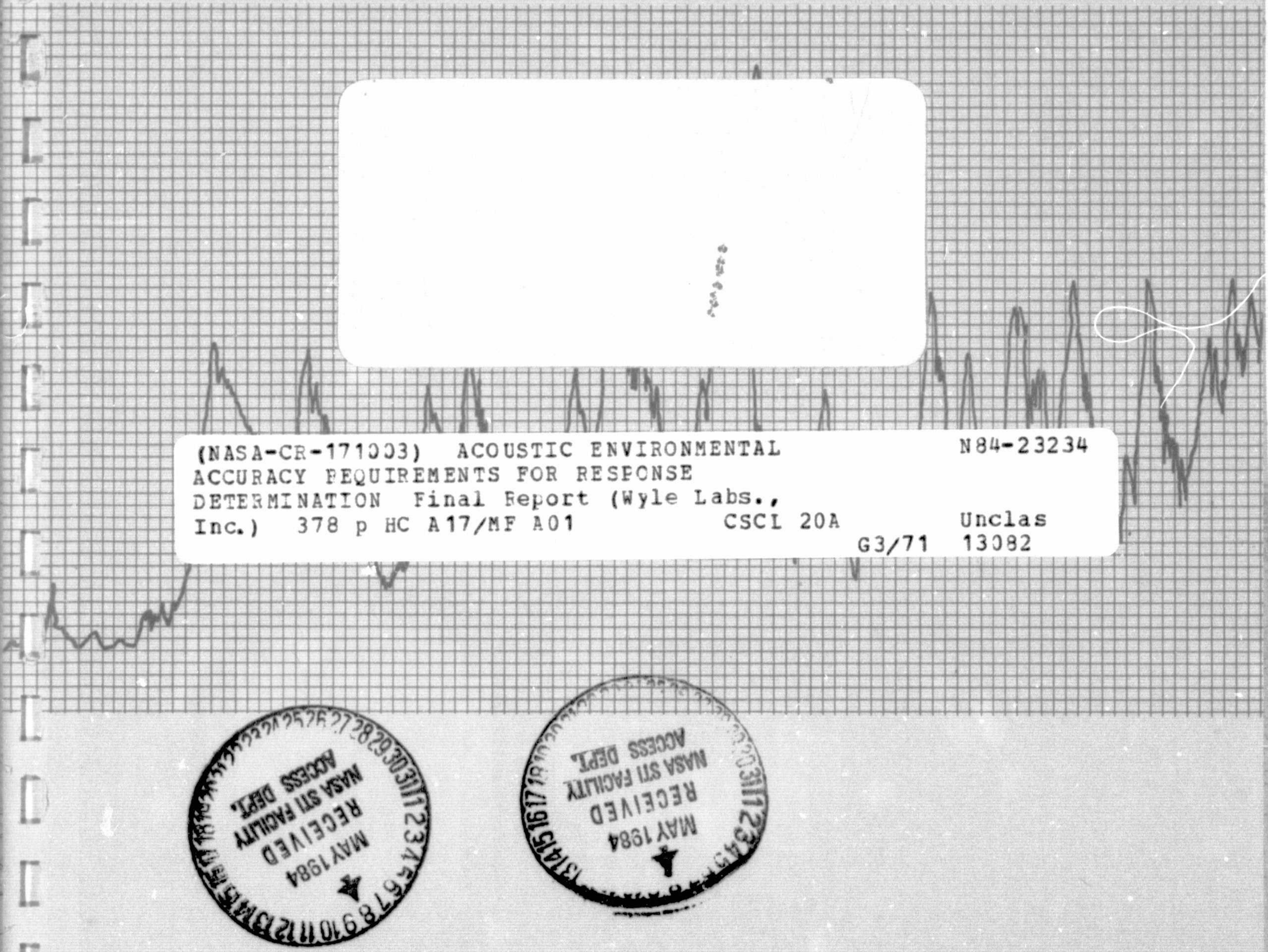

(NASA-CR-171003) ACOUSTIC ENVIRONMENTAL ACCURACY REQUIREMENTS FOR RESPONSE DETERMINATION Final Report (Wyle Labs., Inc.) 378 p HC A17/MF A01 CSCL 20A

N84-23234

Unclas
G3/71 13082

research REPORT

L.A. Schutzenhofer ED14

WYLE LABORATORIES - RESEARCH STAFF
RESEARCH REPORT WR 83-43

# ACOUSTIC ENVIRONMENTAL ACCURACY REQUIREMENTS FOR RESPONSE DETERMINATION

by

Mark R. Pettitt

A Final Report of
Work Performed Under Contract No. NAS8-33379

for

NATIONAL AERONAUTICS AND SPACE ADMINISTRATION
GEORGE C. MARSHALL SPACE FLIGHT CENTER
MARSHALL SPACE FLIGHT CENTER, ALABAMA 35812

December 1983

WYLE LABORATORIES SCIENTIFIC SERVICES & SYSTEMS GROUP
P.O. Box 1008, Huntsville, AL 35807
TWX (810) 726-2225, Phone (205) 837-4411

COPY NO. 14

# FOREWORD

This report was prepared by Wyle Laboratories, Scientific Services & Systems Group, for the National Aeronautics and Space Administration, George C. Marshall Space Flight Center. The work was performed under contract NAS8-33379, entitled "Acoustic Environmental Accuracy Requirements for Response Identification." Administration of this study was provided under the technical direction of the System Dynamics Laboratory with Dr. L. Schutzenhofer, Mr. S. Guest, and Mr. T. Nesman serving as technical monitors at various times during the course of the program.

# TABLE OF CONTENTS

Page

## TABLE OF CONTENTS (CONCLUDED)

## LIST OF FIGURES

# ABSTRACT

A general purpose computer program was developed for the prediction of vehicle interior noise. This program, named VIN, has both modal and statistical energy analysis capabilities for structural/acoustic interaction analysis. The analytical models and their computer implementation were verified through simple test cases with well-defined experimental results. The model was also applied in a Space Shuttle payload bay launch acoustics prediction study. The computer program will process large and small problems with equal efficiency because all arrays are dynamically sized by program input variables at run time. A data base can be built and easily accessed for design studies. The data base significantly reduces the computational costs of such studies by allowing the reuse of the still-valid calculated parameters of previous iterations. Given accurate structural and acoustic response and exterior acoustic field data, the program will yield reliable results. The problem facing the program user will be the determination of the input data. Except for the most simple cases, finite element or experimental structural data will probably be needed for the modal analysis portion of the program. The acoustic component mode synthesis capability of the program makes the determination of the modal analysis range acoustic response less of a problem. For the SEA model, the estimation of the statistical energy analysis parameters, such as the joint acceptance, is required. The joint acceptance includes or is implicitly coupled with structural mode shape information, structural modal density, and external (and internal) pressure distribution estimation. The combined complexity of these factors usually limit the SEA method to rough design trend studies or a post-test semiempirical modeling role. In any case, the general purpose program VIN provides the framework needed to make use of the full capabilities of both the modal analysis and SEA methods for vehicle interior noise predictions.

## Section 1

# INTRODUCTION

Throughout their operational life, space vehicle structures and payloads are subject to severe dynamic excitation. This excitation stems primarily from two sources: acoustic noise or fluctuating pressures associated with rocket engine exhaust flow or turbulent boundary layer flow in flight and direct mechanical excitation caused by thrust oscillations, turbomachinery, control thrusters, and so forth. The operational Space Shuttle program brings with it a high launch rate and stringent reliability requirements associated with equipment reusability along with an increase in the sophistication and complexity of the payloads. To ensure the operational integrity of the structure and payloads (as well as crew safety), it is mandatory that the dynamic environments be accurately estimated for use as design criteria and in the establishment of test requirements.

The overall objective of this study was to extend and implement the technology base in the definition of the response environment for aerospace structures, the internal acoustic fields, and the resultant effect on payloads, directed toward the establishment of system reliability. Considerations include the material and geometric characteristics of the internal volume and the influence of other payloads within the volume, the effect of subvolumes and the structural influence of noise feedback. The prediction techniques developed were implemented on a digital computer and optimized to handle geometry changes, source variations, and other pertinent parameters. Both modal analysis and statistical energy analysis techniques are available in the general-purpose, user-oriented computer program for <u>v</u>ehicle <u>i</u>nterior <u>n</u>oise (VIN) prediction.

The contents of this report are as follows:

> Section 2, Modal Analysis. The discrete modal analytical models and special mathematical techniques used in VIN are presented.
>
> Section 3, Statistical Energy Analysis. The statistical energy analysis model used in VIN is presented.

Section 4, Computer Program. The computer program's organization, structure, capabilities, and limitations are described in detail.

Section 5, Computer Program Verification. The accuracies of the analytical models and computer implementation of the models is established for certain classes of vehicle interior noise problems.

Section 6, Computer Program User's Manual. A section of stand-alone capability. It provides the VIN user with all the information needed to exercise the program.

Section 7, Environmental Prediction. Comparisons of VIN predictions of Space Shuttle internal payload bay acoustic levels to OV101 acoustic test data and actual STS-2 flight data are presented.

Section 8, Summary.

Section 2

## MODAL ANALYSIS

A relatively recent state-of-the-art review, entitled "Master Plan for Prediction of Vehicle Interior Noise,"(1) listed over 160 references in its annotated bibliography. Most of the references presented a procedure for noise prediction and/or reported the results of experiment. These noise prediction procedures range from simplistic to unworkable in terms of degree of sophistication and information required for implementation. A thorough study of methodologies indicated that the basic analytical development by E. H. Dowell(2) provides the simplest and most versatile modal analysis formulation available for low-to medium-frequency structural/acoustic interaction problems of the enclosed cavity type. The acoustic portion of the model is based on Green's theorem in conjunction with small perturbation acoustical relationships. The structure is represented by standard linear relationships with differential pressure across the structural wall as the driving force. Further derivation of the model, which includes normal mode mathematical techniques, results in a set of two coupled differential equations. This coupling occurs because the internal cavity pressure modifies the driving force on the structure. The technique also includes the effects of mass and damping for both the structure and the sound field. An attractive aspect of the formulation is that the differential equations require only "hardwall" acoustic modes and "in vacuo" structural modes. The following is a complete derivation of the modal analytical model used in VIN beginning with a glossary of terms.

### Model Derivation

#### Glossary of Terms

$A_a$ = area of the absorbing surface

$A_f$ = area of flexible boundary

$A_r$ = area of rigid boundary

$c$ = speed of sound in fluid medium

$C_{nr}$ = absorption coupling coefficient

$F_n$ = N-th "hardwall" acoustic mode shape for cavity

$L_{mn}$ = structural-acoustic coupling term

$M$ = structural mass per unit area

$M_m$ = structural generalized mass

$M_n^a$ = acoustic generalized mass

$N$ = normal to surface

$p$ = perturbation pressure

$p^e$ = external perturbation pressure on cavity wall

$P_n$ = coefficient to acoustic normal mode expansion

$q_m$ = generalized displacement

$Q_m^{bl}$ = generalized external blocked pressure

$Q_m^c$ = generalized internal cavity pressure

$Q_m^e$ = generalized external pressure

$t$ = time

$V$ = volume of cavity

$w$ = displacement of cavity wall normal to surface

$\omega$ = frequency

$x_o$ = position in space (x, y, z)

$Z_a$ = acoustic impedance of cavity walls

$\psi_m$ = structural normal mode shape

$\rho$ = density of fluid medium

## Summary of Basic Relations Used in Model Derivation

$$p(x_o, t) = \rho c^2 \sum_N P_n(t) F_n(x_o)/M_n^a$$

$$w(x_o, t) = \sum_M q_m(t) \psi_m(x_o)$$

$$M_n^a = 1/V \int_V F_n^2(x_o)dV$$

$$M_m = \int_{A_f} m\psi_m^2(x_o)dA_f$$

$$C_{nr} = 1/A_a \int_{A_a} F_n(x_o)F_r(x_o)/Z_a(x_o)dA_a$$

$$L_{nm} = 1/A_f \int_{A_f} F_n(x_o)\psi_m(x_o)dA_a$$

$$Q_m^e = - \int_{A_f} p^e(x_o, t)\psi_m(x_o)dA$$

$$P_n = 1/(\rho c^2 V) \int_V p(x_o, t)F_n(x_o)dV$$

## 2.1 Basic Model Derivation

### 2.1.1 Time Domain Equations

Representation of the vehicle acoustics begins with the wave equation for small pressure perturbations:

$$\nabla^2 p(x_o, t) - \frac{1}{c^2} \frac{\partial^2 p(x_o, t)}{\partial t^2} = 0 \tag{1}$$

Momentum equation on the flexible boundary:

$$\frac{\partial p(x_o, t)}{\partial N} = - \rho \bullet \frac{\partial^2 w(x_o, t)}{\partial t^2} \quad \text{on } A_f \tag{2}$$

Momentum equation on the rigid boundary:

$$\frac{\partial p(x_o, t)}{\partial N} = 0 \text{ on } A_r \tag{3}$$

$w(x_o, t)$ is considered positive outward from the cavity.

The rigid wall normal mode solutions of equation 1:

$$p(x_o, t) = F_n(x_o)\rho^{i\omega t}; \; n = 0, 1, 2, 3, \ldots, \tag{4}$$

where $F_n$ has the properties:

$$\nabla^2 F_n(x_o) = -(\omega_n^a/c)\, F_n(x_o) \tag{5}$$

$$\frac{\partial F_n(x_o)}{\partial N} = 0 \quad \text{on } A = A_f + A_r \tag{6}$$

$$1/V \int_V F_r(x_o) F_n(x_o) dV = 0; \quad r \neq n$$
$$= M_n^a; \quad r = n \tag{7}$$

Using Green's identity, which relates the surface integral to the volume integral of a bounded volume, the motion of the boundary can be related to the response of the volume.

$$\int_V \left( p(x_o, t) \nabla^2 F_n(x_o) - F_n(x_o) \nabla^2 p(x_o, t) \right) dV = \int_A \left( p(x_o, t) \frac{\partial F_n(x_o)}{\partial N} - F_n(x_o) \frac{\partial p(x_o, t)}{\partial N} \right) dA \tag{8}$$

Define

$$P_n(t) \equiv \frac{1}{\rho c^2 V} \int_V p(x_o, t)\, F_n(x_o) dV \tag{9}$$

$$W_n(t) \equiv 1/A \int_A w(x_o, t)\, F_n(x_o) dA \tag{10}$$

Break equation 8 into parts:

$$\int_V p(x_o, t)\nabla^2 F_n(x_o) dV - \int_V F_n(x_o)\nabla^2 p(x_o, t) dV = \int_A p(x_o, t)\frac{\partial F_n(x_o)}{\partial N} dA - \int_A F_n(x_o)\frac{\partial p(x_o, t)}{\partial N} dA \qquad (11)$$

Using equations 1, 2, 5, and 6 in equation 11, one obtains

$$\int_V F_n(x_o)\ \frac{1}{\rho c^2}\ \frac{\partial^2 p(x_o, t)}{\partial t^2}\ dV - \int_V\left(p(x_o, t)\ \frac{\omega_n^2}{\rho c^2}\ F_n(x_o)\right) dV = \int_A F_n(x_o)\ \frac{\partial^2 w(x_o, t)}{\partial t^2}\ dA. \qquad (12)$$

Taking constants out of the integrals:

$$\frac{1}{\rho c^2}\int_V F_n(x_o)\ \frac{\partial^2 p(x_o, t)}{\partial t^2}\ dV - \frac{\omega_n^2}{\rho c^2}\int_V F_n(x_o)\ p(x_o, t)\ dV = \int_A \frac{\partial^2 w(x_o, t)}{\partial t^2}\ F_n(x_o)\ dA \qquad (13)$$

Substitute definitions 9 and 10 into 13:

$$\frac{\partial^2 P_n(t)}{\partial t^2} + \omega_n^2\ P_n(t) = -\frac{\partial^2 W_n(t)}{\partial t^2}\ \frac{A_f}{V} \qquad (14)$$

An absorbent wall can be accounted for using the point impedance concept:

$$p(x_o, t) = Z_a(x_o)\ \frac{\partial w(x_o, t)}{\partial t} \quad \text{on } A_a \qquad (15)$$

Apply the momentum equation:

$$\frac{\partial p(x_o, t)}{\partial N} = \rho \frac{\partial^2 w(x_o, t)}{\partial t^2} \quad \text{on } A_a \tag{16}$$

From equation 15,

$$\frac{\partial^2 w(x_o, t)}{\partial t^2} = \frac{1}{Z_a} \frac{\partial p(x_o, t)}{\partial t} \tag{17}$$

Substitute equation 17 into 16:

$$\frac{\partial p(x_o, t)}{\partial N} = - \rho \frac{1}{Z_a} \frac{\partial p(x_o, t)}{\partial t} \tag{18}$$

Substitute equation 18 into equation 8, and solve equation 8 as before to obtain

$$\frac{\partial^2 P_n(t)}{\partial t^2} + \frac{A_a}{V} \rho c \sum_r \left( \frac{C_{nr}}{M_r^a} \frac{\partial P_r(t)}{\partial t} \right) + \omega_n^{a\,2} P_n(t) = \frac{-A_f}{V} \frac{\partial^2 W_a(t)}{\partial t^2} \tag{19}$$

where

$$C_{nr} = \frac{1}{A_a} \int_{A_a} \frac{F_n(x_o) F_r(x_o)}{Z_a(x_o)} \, dA_a \tag{20}$$

Finally, from equation 9,

$$p(x_o, t) = \rho c^2 \sum_n \frac{F_n(x_o)}{M_n^a} \bullet P_n(t) \tag{21}$$

The right-hand side of equation 19 can be expressed in normal mode form; let the wall deflection be expressed in series form:

$$w(x_o, t) = \sum_m q_m(t)\, \psi_m(x_o) \tag{22}$$

The modal functions $\psi_m(x_o)$ are defined over the region $A_f$ with properties determined by the structure.

Recall equation 10:

$$W_n(t) = 1/A_f \int_{A_r} w(x_o, t)\, F_n(x_o)\, dA_f$$

Substitute equation 22 into equation 10 to obtain

$$W_n(t) = 1/A_f \int_{A_f} \sum_m q_m(t)\, \psi_m(x_o)\, F_n(x_o)\, dA_f \tag{23}$$

Extract the time term from the integrals:

$$W_n(t) = 1/A_f \sum_m q_m(t) \int_{A_f} \psi_m(x_o)\, F_n(x_o)\, dA_f \tag{24}$$

Define

$$L_{nm} = 1/A_f \int \psi_m(x_o)\, F_n(x_o)\, dA_f \tag{25}$$

Then

$$W_n(t) = \sum_m L_{nm}\, q_m(t) \tag{26}$$

and

$$\frac{\partial^2 W_n(t)}{\partial t^2} = \sum_m L_{nm} \frac{\partial^2 q_m(t)}{\partial t^2} \tag{27}$$

Substitute equation 27 into 19:

$$\frac{\partial^2 P_n(t)}{\partial t^2} + \frac{A_a}{V}\rho c^2 \sum_r \frac{C_{nr}}{M_r^a}\frac{\partial P_r(t)}{\partial t} + \omega_n^{a^2} P_n(t)$$

$$= \frac{-A_f}{V}\sum_m L_{nm}\frac{\partial^2 q_m(t)}{\partial t^2} \tag{28}$$

Equation 28 is a differential equation in time only and represents the acoustics of a volume bounded by a structure. The structure can be represented by a linear partial differential equation of the form

$$S_w(x_o, t) + F_d + M\frac{\partial^2 w(x_o, t)}{\partial t^2} = p(x_o, t) - p^e(x_o, t) \tag{29}$$

$S$ = linear differential operator representing structural stiffness.

$F_d$ = damping force; a common model is the viscous damper.

$F_d = C\dfrac{\partial w(x_o, t)}{\partial t}$

$M\dfrac{\partial^2 w(x_o, t)}{\partial t^2}$ = structural inertial force per unit area.

$p(x_c, t)$ = internal cavity pressure.

$p^e(x_o, t)$ = external cavity pressure.

For simplicity, one can assume the structural modes, $\omega_m$, are normal in vacuo modes satisfying the eigenvalue problem:

$$S\psi_m(x_o) - M\psi_m(x_o)\,\omega_m^2 = 0, \tag{30}$$

with

$$\int_{A_f} M\psi_m(x_o)\,\psi_r(x_o)dA = 0 \quad ; \quad m \neq r$$
$$= M_m \quad ; \quad m = r. \tag{31}$$

$\omega_m$ is the m-th structural natural frequency and $\psi_m$ its associated normal mode.

Substitute equation 22 into 29:

$$S\left(\sum_m q_m(t)\,\psi_m(x_o)\right) + C\sum_m \psi_m(x_o)\,\frac{\partial q_m(t)}{\partial t} + M\sum_m \psi_m(x_o)\,\frac{\partial^2 q_m(t)}{\partial t^2} = p(x_o, t) - p^e(x_o, t) \qquad (32)$$

Rearrange

$$\sum_m \left(Sq_m(t) + C\,\frac{\partial q_m(t)}{\partial t} + M\,\frac{\partial^2 q_m(t)}{\partial t^2}\right)\psi_m(x_o) = p(x_o, t) - P^e(x_o, t) \qquad (33)$$

Recall from equation 30 that

$$S = M\omega_m^2. \qquad (34)$$

Substitute into equation 33:

$$\sum_m M\left(\omega_m^2 q_m(t) + \frac{C}{M}\,\frac{\partial q_m(t)}{\partial t} + \frac{\partial^2 q_m(t)}{\partial t^2}\right)\psi_m(x_o) = p(x_o, t) - p^e(x_o, t) \qquad (35)$$

Multiply through by $\psi_m(x_o)$ and integrate over the area $A_f$. Apply orthogonality relations; obtain:

$$\left(\omega_m^2 q_m(t) + \frac{C}{M}\,\frac{\partial q_m(t)}{\partial t} + \frac{\partial^2 q_m(t)}{\partial t^2}\right) M_m = Q_m(t) + Q_m^e(t) \qquad (36)$$

where

$$Q_m(t) = \int_{A_f} p(x_o, t)\,\psi_m(x_o)\,dA_f \qquad (37)$$

$$Q_m^e(t) = -\int_{A_f} p^e(x_o, t)\,\psi_m(x_o)\,dA_f$$

ORIGINAL PAGE IS
OF POOR QUALITY

Substitute equation 21 into equation 37 for $Q_m(t)$:

$$Q_m(t) = \int_{A_f} \rho c^2 \sum_n \frac{F_n(x_o)}{M_n^a} P_n(t)\, \psi_m(x_o) dA_f \tag{38}$$

$$Q_m(t) = \sum_n \frac{\rho c^2}{M_n^a} P_n(t) \int_{A_f} F_n(x_o)\, \psi_m(x_o) dA_f \tag{39}$$

Substituting equation 25 into equation 39:

$$Q_m(t) = \rho c^2 A_f \sum_n \frac{P_n(t)}{M_n^a} L_{nm} \tag{40}$$

Substitute equation 40 into equation 36 to obtain the desired form for the structural equation:

$$\left(\omega_m^2 q_m(t) + \frac{C}{M} \frac{\partial q_m(t)}{\partial t} + \frac{\partial^2 q_m(t)}{\partial t^2}\right) M_m$$

$$= \rho c^2 A_f \sum_n \frac{P_n(t) L_{nm}}{M_n^a} + Q_m^e(t) \tag{41}$$

In summary, the vehicle interior noise problem can be modeled by a set of coupled differential equations, one describing the acoustic response (equation 28) and one representing the structural response (equation 41).

**Acoustic Equation:**

$$\frac{\partial^2 P_n(t)}{\partial t^2} + \frac{A_a \rho c^2}{V} \sum_r \frac{C_{nr}}{M_r^a} \frac{\partial P_r(t)}{\partial t} + \omega_n^{a\,2} P_n(t)$$

$$= \frac{-A_f}{V} \sum_m L_{mn} \frac{\partial q_m(t)}{\partial t^2}$$

**Structural Equation:**

$$M_m \left( \frac{\partial^2 q_m(t)}{\partial t^2} + \frac{C}{M} \frac{\partial q_m(t)}{\partial t} + \omega_m^2 q_m(t) \right)$$

$$= \rho c^2 A_p \sum_n \frac{P_n(t) L_{nm}}{M_n^a} + Q_m^e(t)$$

Given some external pressure field or point force on the structure $Q_m^e(t)$, the equations can be solved by any standard method to obtain $P_n(t)$. With $P_n(t)$, the internal pressure at a point or the average internal pressure can be calculated. Recall equation 21:

$$p(x_o, t) = \rho c^2 \sum_n \frac{P_n(t)\, F_n(x_o)}{M_n^a}$$

The space-averaged pressure squared over the vehicle structure at time, t, is calculated by

$$\left\langle p^2(x_o, t) \right\rangle = \frac{1}{V} \int_V p^2(x_o, t)\, dV$$

$$= \frac{1}{V} \int_V \rho c^2 \sum_n \frac{P_n(t)\, F_n(x_o)}{M_n^a} \quad \rho c^2 \sum_{n'} \frac{P^*_{n'}(t)\, F_n(x_o)}{M_n^a} \; dV$$

$$= \rho^2 c^4 \sum_n \sum_{n'} \frac{P_n(t) P^*_{n'}(t)}{M_n^a M_{n'}^a} \quad \frac{1}{V} \int_V F_n(x_o) F_{n'}(x_o)\, dV$$

Due to orthogonality,

$$\int_V F_n(x_o) F_{n'}(x_o)\, dV = 0 \quad \text{for } n \neq n'.$$

Hence, the space-averaged pressure squared over the volume can be calculated by

$$\left\langle p^2(x_o, t)\right\rangle_{\text{volume}} = \rho^2 c^4 \sum_n \frac{P_n^2(t)}{M_n^a} \tag{42}$$

### 2.1.2 Frequency Domain Equations

Equations in the frequency domain can also be obtained. Let

$$P_n(t) = \int_{-\infty}^{\infty} \overline{P}_n(\omega) e^{-i\omega t}\, d\omega \tag{43}$$

$$\frac{\partial P_n(t)}{\partial t} = \int_{-\infty}^{\infty} - i\omega \overline{P}_n(\omega) e^{-i\omega t}\, d\omega$$

$$\frac{\partial^2 P_n(t)}{\partial t^2} = \int_{-\infty}^{\infty} - \omega^2 \overline{P}_n(\omega) e^{-i\omega t}\, d\omega$$

and

$$q_m(t) = \int_{-\infty}^{\infty} \overline{q}_m(\omega) e^{-i\omega t}\, d\omega \tag{44}$$

$$\frac{\partial q_m(t)}{\partial t} = \int_{-\infty}^{\infty} - i\omega \overline{q}_m(\omega) e^{-i\omega t}\, d\omega$$

$$\frac{\partial^2 q_m(t)}{\partial t^2} = \int_{-\infty}^{\infty} - \omega^2\, \overline{q}_m(\omega) e^{-i\omega t}\, d\omega$$

And

$$Q_m^e(t) = \int_{-\infty}^{\infty} \int_{A_f} \bar{p}^e(x_o, \omega)\psi_m(x_o)dA_f \quad e^{-i\omega t}\, d\omega$$

$$= \int_{-\infty}^{\infty} \bar{Q}_m^{bl}(\omega)\, e^{-i\omega t}\, d\omega \tag{45}$$

Substitute these relations into the time domain differential equations:

$$\int_{-\infty}^{\infty} \left( \left( - \omega - \frac{A_a \rho c^2}{V} \sum_r \frac{C_{nr}}{M_r^a}\, \omega i + \omega_n^{a\,2} \right) \bar{P}_n(\omega) \right.$$

$$\left. - \sum_m \frac{A_f}{V}\ L_{nm}\, \omega^2\, \bar{q}_m(\omega) \right) e^{-i\omega t}\, d\omega = 0 \tag{46}$$

and

$$\int_{-\infty}^{\infty} \left( M_m \left( - \omega^2 - \frac{C}{M}\, \omega i + \omega_m^2 \right) \bar{q}_m(\omega) \right.$$

$$\left. - \left( \rho c^2 A_f \sum_n \frac{L_{nm}}{M_n^a}\ \omega i \right) \bar{P}_n(\omega) - \bar{Q}_n^{bl}(\omega) \right) e^{-i\omega t}\, d\omega = 0 \tag{47}$$

If equations 45 and 46 are to hold, the integrands must be equal to zero. Hence,

**Acoustic frequency domain equation:**

$$\left( - \omega^2 - \frac{A_a \rho c^2}{V} \sum_r \frac{C_{nr}}{M_r^a}\ \omega i + \omega_n^{a\,2} \right) \bar{P}_n(\omega) = \sum_m \frac{A_f}{V}\ L_{nm}\, \omega^2\, \bar{q}_m(\omega) \tag{48}$$

**Structural frequency domain equation:**

$$M_m \left( - \omega^2 - \frac{C}{M}\ \omega i + \omega_m^2 \right) \bar{q}_m(\omega) - \rho c^2\, A_f \sum_n \frac{L_{nm}}{M_n^a}\ \omega i\, \bar{P}_n(\omega) = \bar{Q}_m^{bl}(\omega) \tag{49}$$

If one is interested in the acoustic pressure inside the structure, equations 48 and 49 can be combined to eliminate $\bar{q}_m(\omega)$. From equation 48:

$$\bar{P}_n(\omega) = \left(\sum_m \frac{A_f}{V} L_{nm}\,\omega^2\,\bar{q}_m(\omega)\right) \Bigg/ \left(-\,\omega^2 - \sum_r 2\zeta^a_{nr}\,\omega^a_n\,\omega i + \omega^{a^2}_n\right) \tag{50}$$

where

$$2\zeta^a_{nr}\,\omega_n = \frac{A_a}{V}\,\rho c^2\,\frac{C_{nr}}{M^a_n}$$

From equation 49:

$$\bar{q}_m(\omega) = \frac{\left(\bar{Q}^{bl}_m + \rho c^2 A_f \sum_n \frac{L_{nn}}{M^a_n}\,\omega i\,\bar{P}_n(\omega)\right)}{M_m\left(-\,\omega^2 - 2\zeta_m\,\omega_m\,\omega i + \omega^2_m\right)} \tag{51}$$

where

$$2\zeta_m\,\omega_m = \frac{C}{M} \quad \text{Viscous damping model} \tag{52}$$

$\bar{Q}^{bl}_m$ = Generalized force (understood function of $\omega$)

Substitute equation 51 into 50 and changing the summation index n in equation 51 to s to avoid confusion with the index in equation 50.

$$\bar{P}_n(\omega) = \sum_m \left(\frac{A_f}{V} L_{nm}\,\omega^2 \left(\bar{Q}^{bl}_m + \rho c^2 A_f \sum_s \frac{L_{sm}}{M^a_s}\,\omega i\,\bar{P}_s(\omega)\right) \Big/ M_m(-\,\omega^2 - 2\zeta_m\,\omega_m\,\omega i + \omega^2_m)\right) \Bigg/ \left(-\,\omega^2 - \sum_r 2\zeta_{nr}\,\omega^a_n\,\omega i + \omega^{a^2}_n\right) \tag{53}$$

To shorten the equation, define:

$$\Gamma_n(\omega) \equiv \left(-\omega^2 - \sum_r 2\zeta_{nr}\,\omega_n\,\omega i + {\omega_n^a}^2\right)$$

$$\mathcal{T}_m(\omega) \equiv M_m\left(-\omega^2 - 2\zeta_m\,\omega_m\,\omega i + \omega_m^2\right) \tag{54}$$

Equation 53 becomes

$$\bar{P}_n(\omega) = \sum_m \left(\frac{A_f}{V} L_{nm}\ \omega^2 \left(\left(\bar{Q}_m^{bl} + \rho c^2 A_f \sum_s \frac{L_{sm}}{M_s^a}\,\omega i\,\bar{P}_s(\omega)\right) \Big/ \mathcal{T}_m(\omega)\right)\right) \Big/ \Gamma_n(\omega) \tag{55}$$

Solution of this equation involves a set of "n" equations and "n" unknowns. The coupled nature of the solution is, as previously discussed, caused by the effect of the internal cavity pressure on the structural response of the cavity wall. Equation 55 can be made more clear by the following expansion:

$$\begin{aligned}\bar{P}_n(\omega) = \sum_m \Bigg[\frac{A_f\,L_{nm}\,\omega^2}{\mathcal{T}_m(\omega)} & \left(\bar{Q}_m^{bl} + \rho c^2 A_f \frac{L_{om}}{M_o^a}\,\omega i\,\bar{P}_o(\omega)\right.\\ & + \rho c^2 A_f \frac{L_{1m}}{M_1^a}\,\omega i\,\bar{P}_1(\omega) + \rho c^2 A_f \frac{L_{2m}}{M_2^a}\,\omega i\,\bar{P}_2(\omega)\\ & + \ldots + \rho c^2 A_f \frac{L_{nm}}{M_n^a}\,\omega i\,\bar{P}_n(\omega)\\ & \left. + \ldots + \rho c^2 A_f \frac{L_{sm}}{M_n^a}\,\omega i\,\bar{P}_s(\omega)\right)\Bigg] \Big/ \Gamma_n(\omega)\end{aligned} \tag{56}$$

Solve for $\bar{P}_n(\omega)$:

$$\bar{P}_n(\omega) \bullet \Gamma_n(\omega) = \sum_m \left[ \frac{A_f}{V} \frac{L_{nm}\,\omega^2}{\mathcal{T}_m(\omega)} \left( \bar{Q}_m^{\,bl} + \rho c^2 A_f \sum_{s \neq n} \frac{L_{sm}}{M_s^a}\, \omega i\, \bar{P}_s(\omega) \right) \right] + \sum_m \left[ \frac{A_f}{V} \frac{L_{nm}}{\mathcal{T}_m(\omega)}\, \rho c^2 A_f \frac{L_{nm}}{M_n^a}\, \omega i\, \bar{P}_n(\omega) \right] \tag{57}$$

$$\bar{P}_n(\omega) \bullet \Gamma_n(\omega) - \sum_m \left[ \frac{A_f}{V} \frac{L_{nm}\,\omega^2}{\mathcal{T}_m(\omega)}\, \rho c^2 A_f \frac{L_{nm}}{M_n^a}\, \omega i \right] = \sum_m \left[ \frac{A_f}{V} \frac{L_{nm}\,\omega^2}{\mathcal{T}_m(\omega)} \left( \bar{Q}_m^{\,bl} + \rho c^2 A_f \sum_{s \neq n} \frac{L_{sm}}{M_s^a}\, \omega i\, \bar{P}_s(\omega) \right) \right] \tag{58}$$

And finally,

$$\bar{P}_n(\omega) = \frac{\displaystyle \sum_m \left[ \frac{A_f}{V} \frac{L_{nm}\,\omega^2}{\mathcal{T}_m(\omega)} \left( \bar{Q}_m^{\,bl} + \rho c^2 A_f \sum_{s \neq n} \frac{L_{sm}}{M_s^a}\, \omega i\, \bar{P}_s(\omega) \right) \right]}{\displaystyle \left[ \Gamma_n(\omega) - \sum_m \left[ \frac{A_f}{V} \frac{L_{nm}\,\omega^2}{\mathcal{T}_m(\omega)} \rho c^2 A_f \frac{L_{nm}\,\omega i}{M_n^a} \right] \right]} \tag{59}$$

$$\bar{P}_n(\omega) = \frac{\displaystyle \sum_m \left[ \frac{A_f}{V} \frac{L_{nm}\,\omega^2}{\mathcal{T}_m(\omega)\, \Gamma_n(\omega)} \left( \bar{Q}_m^{\,bl} + \rho c^2 A_f \sum_{s \neq n} \frac{L_{sm}}{M_s^a}\, \omega i\, \bar{P}_s(\omega) \right) \right]}{\displaystyle \left[ 1 - \sum_m \frac{A_f\, L_{nm}\,\omega^2}{\mathcal{T}_m(\omega)\, \Gamma_n(\omega)} \, \frac{\rho c^2 A_f\, L_{nm}\,\omega i}{M_n^a} \right]} \tag{60}$$

Let

$$I_{nm} = \frac{A_f L_{nm} \omega^2}{V \mathcal{T}_m(\omega) \Gamma_n(\omega)} \tag{60a}$$

$$K_{sm} = \rho c^2 A_f \frac{L_{sm}}{M_s^a} \omega i$$

$$K_{nm} = \rho c^2 A_f \frac{L_{nm}}{M_n^a} \omega i$$

Hence,

$$\bar{P}_n(\omega) = \frac{\left[\sum_m I_{nm} \left(\bar{Q}_m^{bl} + \sum_{s \neq n} K_{sm} \bar{P}_s(\omega)\right)\right]}{\left(1 - \sum_m I_{nm} K_{nm}\right)} \tag{61}$$

Equation 61 can be used to generate the set of simultaneous frequency domain equations required to solve closed cavity problems in which the effect of the internal sound field on the motion of the structure is significant.

When the acoustoelastic coupling is negligible, the problem solution becomes much simpler. The acoustic equation and the structural equation are independent. Equation 51 becomes

$$\bar{q}_m(\omega) = \frac{\left(\bar{Q}_m^{bl}\right)}{\mathcal{T}_m(\omega)} \tag{62}$$

Substitute equation 62 into equation 51:

$$\bar{P}_n(\omega) = \sum_m \frac{A_f}{V} \frac{L_{nm} \omega^2 \bar{Q}_m^{bl}}{\mathcal{T}_m(\omega) \Gamma_n(\omega)} \tag{63}$$

ORIGINAL PAGE IS
OF POOR QUALITY

Using the definition of $I_{nm}$ (equation 60),

$$\bar{P}_n(\omega) = \sum_m I_{nm} \bar{Q}_m^{bl} \tag{64}$$

Hence, the solution for each mode "n" consists of a single equation when the effect of the cavity pressure on the wall motion can be neglected. In either case, once $\bar{P}_n(\omega)$ has been found, the pressure can be calculated.

$$p(x_o, \omega) = \rho c^2 \sum_n \frac{\bar{P}_n(\omega) F_n(x_o)}{M_n^a} \tag{65}$$

Equation 65 yields the pressure at a point and at a single frequency. Other quantities of interest are the space-averaged pressure squared at a frequency and the space-averaged, band-limited pressure squared. The mean square pressure is

$$p^2(x_o, \omega) = p(x_o, \omega)\, p^*(x_o, \omega) / 2 \tag{66}$$

Recall equation 65:

$$p(x_o, \omega) = \rho c^2 \sum_n \frac{\bar{P}_n(\omega) F_n(x_o)}{M_n^a}$$

Then

$$p^*(x_o, \omega) = \rho c^2 \sum_{n'} \frac{\bar{P}^*_{n'}(\omega) F_{n'}(x_o)}{M_{n'}^a}$$

Hence,

$$p^2(x_o, \omega) = \frac{1}{2} \rho^2 c^4 \sum_n \sum_{n'} \frac{\bar{P}_n(\omega) P^*_{n'}(\omega)}{M_n^a M_{n'}^a} F_n(x_o) F_{n'}(x_o) \tag{67}$$

$$\text{Space average} \quad \left\langle p^2(x_o, \omega) \right\rangle = 1/V \int_V p^2(x_o, \omega) dV \tag{68}$$

$$\left\langle p^2(x_o, \omega)\right\rangle = \sum_n \sum_{n'} \frac{1}{2} \rho^2 c^4 \frac{P_n(\omega)\, P^*_{n'}(\omega)}{M^a_n\, M^a_{n'}} \left( \frac{1}{V} \int_V F_n(x_o)\, F_{n'}(x_o) dV \right) \tag{69}$$

Because of the orthogonality of the normal modes $F_n(x_o)$, equation 69 reduces to

$$\left\langle p^2(x_o, \omega)\right\rangle = \sum_n \frac{\rho^2 c^4}{2} \frac{P_n(\omega)\, P^*_n(\omega)}{M^a_n} \tag{70}$$

To obtain space-averaged, band-limited pressure squared, simply apply integration techniques over the band of interest.

$$\left\langle p^2(x_o, \omega)\right\rangle_{\text{band}} = \int_{\text{band}} \left( \sum_n 1/2\ \rho^2 c^4 \frac{\overline{P}_n(\omega)\, \overline{P}^*_n(\omega)}{M^a_n} \right) d\omega \tag{71}$$

In the case of a deterministic external pressure field, equations 65, 70, and 71 can be solved. However, if the external pressure field must be considered random, further derivation is required to adapt the equations to accept external pressure field information in that form. One method of developing probability descriptions of random variables is through the use of the expected value:

$$E[\underline{x}] = \int_{-\infty}^{\infty} x\, f_{\underline{x}}(x) dx$$

where $\underline{x}$ - denotes a random variable

$f_{\underline{x}}(x)$ - density of the random variable $\underline{x}$

In the case of Fourier transformed data, the random variables are functions of $\omega$ based on a sample length T. Recall equation 70 (the space-averaged pressure squared).

$$\left\langle p^2(x_o, \omega)\right\rangle = \sum_n 1/2\ \rho^2 c^4 \frac{\overline{P}^*_n(\omega)\, \overline{P}_n(\omega)}{M^a_n}$$

Take the expected value of both sides:

$$E\left[\left\langle p^2(x_o, \omega)\right\rangle\right] = \sum_n \frac{1}{2}\,\frac{\rho^2 c^4}{M_n^a}\,E\left[\bar{P}_n^*(\omega)\bar{P}_N(\omega)\right] \tag{72}$$

Let

$$\begin{aligned} S_p(\omega) &= E\left[\left\langle p^2(x_o, \omega)\right\rangle\right] \\ S_{\bar{P}_n}(\omega) &= E\left[\bar{P}_n^*(\omega)\,\bar{P}_n(\omega)\right] \end{aligned} \tag{73}$$

When the effect of the internal pressure on the cavity structure is negligible, $S_{\bar{P}_n}(\omega)$ can be calculated.

$$\bar{P}_n(\omega) = \sum_m I_{nm} \int_A -\,\bar{p}^{\,e}(x'_o, \omega)\,\psi_m(x_o)dA \tag{74}$$

$$\bar{P}_n^*(\omega) = \sum_s I_{ns}^* \int_{A'} -\,\bar{p}^{\overset{*}{e}}(x'_o, \omega)\,\psi_s(x'_o)dA' \tag{75}$$

Then

$$\bar{P}_n^*(\omega)\bar{P}_n(\omega) = \sum_s \quad {}_m \quad I_{ns}^* I_{nm} \int_{A'}\int_A p^{e*}(x'_o, \omega)p^e(x_o, \omega)\psi_s(x'_o)\psi_m(x_o)dAdA' \tag{76}$$

Take the expected value of equation 76

$$E\left[\bar{P}_n^*(\omega)\bar{P}_n(\omega)\right] = \sum_s\sum_m I_{ns}^{*'} I_{nm}\int_{A'}\int_A E\left[p^{e*}(x'_o\ \omega)p^e(x_o, \omega)\right]\psi_s(x'_o)\psi_m(x_o)dAdA' \tag{77}$$

Define the joint acceptance

$$J_{ms}^2(\omega) = \frac{1}{S_{pbl}(\omega)\,A^2} \bullet \int_A\int_{A'} S_{pbl}(x_o \,|\, x'_o, \omega)\,\psi_s(x_o)\,\psi_m(x'_o)dA'dA \tag{78}$$

$S_{pbl}(\omega)$ - Blocked pressure power spectral density at reference point or averaged over the surface.

$S_{pbl(x_o | x_{o'}, \omega)}$ - Blocked pressure cross-power spectral density.

Substitute into equation 77

$$E\left[P_n^*(\omega)\, P_n(\omega)\right] = \sum_s \sum_m I_{ns}^* I_{nm} A^2 S_{pbl}(\omega) J_{ms}^2(\omega) * 2$$

$$= 2 A^2 S_{pbl}(\omega) \left( \sum_s \sum_m I_{ns}^* I_{nm} J_{ms}^2(\omega) \right) \qquad (79)$$

Substitute equation 79 into equation 72

$$E\left[\left\langle p^2(x_o, \omega)\right\rangle\right] = \sum_n \frac{\rho^2 c^4}{M_n^a} \bullet A^2 S_{pbl}(\omega) \bullet \left( \sum_s \sum_m I_{ns}^* I_{nm} J_{ms}^2(\omega) \right) \qquad (80)$$

In many cases, $J_{ms} \approx 0$ when $m \neq s$. This approximation is valid if the structural damping is light and the correlation length of the external pressure field is small. The approximation simply asserts that the cross coupling between modes of the structure is negligible. With this generally valid assumption, the space-averaged, band-averaged pressure becomes

$$S_p(\omega) = \sum_n \frac{\rho^2 c^4}{M_n^a} A^2 S_{pbl}(\omega) \sum_m \left| I_{nm} \right|^2 J_{mm}^2(\omega) \qquad (81)$$

Equation 81 is used to calculate the expected value of the space-averaged pressure squared at a given frequency when the effect of internal cavity pressure on the motion of the cavity wall is negligible. If the coupling is important, a solvable random formulation has not been obtained. In such cases, a representative time history of the external excitation can be synthesized and the deterministic solution found.

The band-limited, space-averaged pressure squared can be analytically calculated.

$$\int_{\omega_1}^{\omega_2} S_p(\omega)d\omega = A^2 \rho^2 c^4 \sum_n \frac{1}{M_n^a}$$

$$\cdot \int_{\omega_1}^{\omega_2} S_{pbl}(\omega) \sum_m \left| I_{nm} \right|^2 J_{mn}^2(\omega) d\omega$$

Assuming $S_{pbl}(\omega)$ and $J_{mm}^2(\omega)$ are constant over the band,

$$\int_{\omega_1}^{\omega_2} S_p(\omega)d\omega = A^2 \rho^2 c^4 \sum_n \frac{1}{M_n^a}$$

$$\cdot \; S_{pbl}(\omega_c) \sum_m J_{mm}^2(\omega_c) \int_{\omega_1}^{\omega_2} \left| I_{nm} \right|^2 d\omega \tag{82}$$

where $\omega_c$ = center frequency of the band.

The integral over frequency in equation 82 can be analytically evaluated through integration by parts. For the sake of brevity, the long and tedious integration is not given here. If the exterior pressure is expressed in terms of band-limited mean square pressure, replace $S_{pbl}(\omega_c)$ with the band level, $BS_{pbl}$, divided by the bandwidth.

## 2.2 Peripheral Developments to the Modal Analysis Model

Various extensions to the basic model can be made to increase the versatility of a computer program implementing the model. In this section, these developments are presented and discussed.

### 2.2.1 Acoustic Component Mode Synthesis

If the acoustic normal modes of a cavity shape are not known, they can be found through a process called "component mode synthesis." In this process, the complex cavity is approximated by several smaller cavities of known modal characteristics. By forcing the pressures to be equal at the openings between the subcavities, a solution for the normal modes of the complex cavity can be obtained. The following is a sample derivation for the simple case of two cavities connected by one opening. It should be noted that the "opening" could be a structural panel.

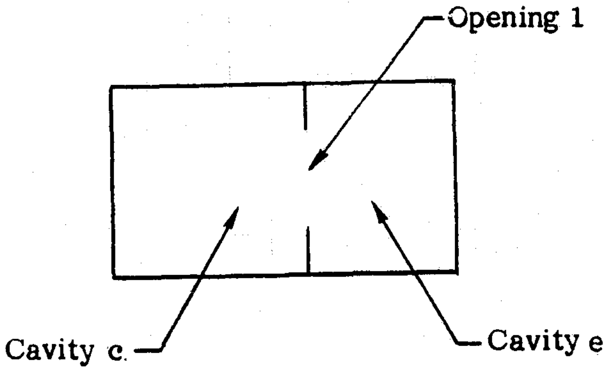

The structural equation for the opening between the cavities can be written:

$$Sw(x_o, t) + C\frac{\partial w(x_o, t)}{\partial t} + m\frac{\partial^2 w(x_o, t)}{\partial t^2} = p^c(x_o, t) - p^e(x_o, t) \qquad (83)$$

Define the normal modes as before.

$$\begin{aligned} w(x_o, t) &= \sum_m q_m(t)\, \psi_m(x_o) \\ S\psi_m - M\psi_m \omega_m^2 &= 0 \\ \int_A M\psi_m(x_o)\psi_r(x_o)dA &= M_m \qquad m = r \\ &= 0 \qquad m \neq r \end{aligned} \qquad (84)$$

Substitute equations of 84 into 83:

$$\sum_m M\left(\frac{\partial^2 q_m(t)}{\partial t^2} + C\frac{\partial q_m(t)}{\partial t} + \omega_m^2 q_m(t)\right)\psi_m(x_o) = p^c(x_o, t) - p^e(x_o, t) \qquad (85)$$

Recall that

$$p(x_o, t) = \rho c^2 \sum_n P_n(t) \frac{F_n(x_o)}{M_n^a}$$

ORIGINAL PAGE IS
OF POOR QUALITY

Hence,

$$\sum_m M\left(\frac{\partial^2 q_m(t)}{\partial t^2} + C\,\frac{\partial q_m(t)}{\partial t} + \omega_m^2\, q_m(t)\right)\psi_m(x_o)$$

$$= \rho c^2 \sum_n P_n^c(t)\,\frac{F_n^c(x_o)}{M_n^{a_c}} - \rho c^2 \sum_n P_n^e(t)\,\frac{F_n^e(x_o)}{M_n^{a_e}} \qquad (86)$$

Multiply through by $\psi_r(x_o)$ and integrate over $A_f$:

$$\sum_m \left(\frac{\partial^2 q_m(t)}{\partial t^2} + C\,\frac{\partial q_m(t)}{\partial t} + \omega_m^2\, q_m(t)\right) M_m$$

$$= \int_{A_f} \rho c^2 \sum_n \frac{P_n^c(t)\, F_n^c(x_o)}{M_n^{a_c}}\, \psi_m(x_o) dA_f$$

$$- \int_{A_f} \rho c^2 \sum_n \frac{P_n^e(t)\, F_n^e(x_o)}{M_n^{a_e}}\, \psi_m(x_o) dA \qquad (87)$$

Using the definition of equation 25 in equation 87,

$$\sum_m \left(\frac{\partial^2 q_m(t)}{\partial t^2} + C\,\frac{\partial q_m(t)}{\partial t} + \omega_m^2\, q_m(t)\right) M_m$$

$$= \rho c^2 A_f \sum_n \frac{P_n^c(t)\, L_{nm}^c}{M_n^{a_c}}$$

$$- \rho c^2 A_f \sum_n \frac{P_n^e(t)\, L_{nm}^e}{M_n^{a_e}} \qquad (88)$$

In a multiple cavity problem with more than one opening, an equation like 88 is written for each opening.

The hard wall acoustic equations for each cavity are

$$\frac{\partial^2 P_n^c(t)}{\partial t^2} + \omega_n^{a_c^2} P_n^c(t) = -\frac{A_f}{V_c} \sum_m \frac{\partial^2 q_m(t)\, L_{nm}^c}{\partial t^2} \tag{89}$$

$$\frac{\partial^2 P_n^e(t)}{\partial t^2} + \omega_n^{a_e^2} P_n^e(t) = \frac{A_f}{V_e} \sum_m \frac{\partial^2 q_m(t)}{\partial t^2} L_{nm}^e \tag{90}$$

In a system of more than two cavities, one equation must be written for each cavity in the system. The right-hand side is the forcing function of the cavity and represents the motion of the opening to the cavity.

Shifting to the frequency domain and making the standard substitutions,

$$M_m \left( -\omega^2 + 2\zeta_m \omega_m \omega i + \omega_m^2 \right) \bar{q}_m(\omega) = \rho c^2 A_f \sum_n \frac{\bar{P}_n^c(\omega)\, L_{nm}^c}{M_n^{a_c}} - \rho c^2 A_f \sum_n \frac{\bar{P}_n^e(\omega)\, L_{nm}^e}{M_n^{a_e}} \tag{91}$$

$$\left( -\omega^2 + \omega_n^{c^2} \right) \bar{P}_n^c(\omega) = -\frac{A_f}{V_c} \sum_m \left( -\omega^2\, \bar{q}_m(\omega)\, L_{nm}^c \right) \tag{92}$$

$$\left( -\omega^2 + \omega_n^{e^2} \right) \bar{P}_n^e(\omega) = +\frac{A_f}{V_e} \sum_m \left( -\omega^2\, \bar{q}_m(\omega)\, L_{nm}^e \right) \tag{93}$$

In principle, any number of cavities and openings could be accommodated. The set of equations includes one equation for each opening and one equation for each cavity. The number of terms on the RHS of equations 92 and 93 depend on the number of openings into the cavity.

ORIGINAL PAGE IS
OF POOR QUALITY

In the case of a pure opening (i.e., no wall), the result can be simplified because $M_m$ goes to zero:

$$0 = A_f \sum_n \frac{\bar{P}^c_n(\omega)\, L^c_{nr}}{M^c_n} - A_f \sum_n \frac{\bar{P}^e_n(\omega)\, L^e_{nr}}{M^e_n} \tag{94}$$

$$\bar{P}^c_n(\omega) = - \frac{\frac{A_f}{V_c}\left[\sum_m \left(-\omega^2\, \bar{q}_m(\omega)\, L^c_{nm}\right)\right]}{\left(-\omega^2 + \omega^{c^2}_n\right)} \tag{95}$$

$$\bar{P}^e_n(\omega) = \frac{\frac{A_f}{V_e} \sum_m \left(-\omega^2\, \bar{q}_m(\omega)\, L^e_{nm}\right)}{\left(-\omega^2 + \omega^{e^2}_n\right)} \tag{96}$$

$$0 = A_f \sum_n \frac{-A_f}{V_c} \sum_m \frac{\left(-\omega^2\, \bar{q}_m\, L^c_{nm}\right)}{\left(\omega^{c^2}_n - \omega^2\right)} \frac{L^c_{nr}}{M^c_n}$$

$$- A_f \sum_n \frac{A_f}{V^e} \sum_m \frac{-\omega^2\, \bar{q}_m\, L^e_{nm}}{\left(\omega^{e^2}_n - \omega^2\right)} \frac{L_{nr}}{M^e_n}$$

$$0 = \frac{-A^2_f}{V_c} \sum_n \frac{1}{M^c_n} \frac{(-\omega^2)}{\left(\omega^{c^2}_n - \omega^2\right)} \sum_m L^c_{nm}\, L^c_{nr}\, \bar{q}_m$$

$$- \frac{A^2_f}{V_e} \sum_n \frac{1}{M^e_n} \frac{-\omega^2}{\left(\omega^{e^2}_n - \omega^2\right)} \sum_m L^e_{nm}\, L^e_{nr}\, \bar{q}_m$$

Divide out $(-\omega^2)$ and let

$$Q_{rm} = \left[\frac{A_f^2}{V^c} \sum_n \frac{L_{nm}^c L_{nr}^c}{\left(\omega_n^{c^2} - \omega^2\right) M_n^c} + \frac{A_f^2}{V^e} \sum_n \frac{L_{nm}^e L_{nr}^e}{\left(\omega_n^{e^2} - \omega^2\right) M_n^e}\right] \quad (-1)$$

Then

$$\sum_m Q_{rm} \bar{q}_m = 0 \qquad r = 1, 2, 3, \ldots$$

The natural frequencies are determined by the condition that the determinant of the coefficients must vanish.

$$\left| Q_{rm} \right| = 0$$

Equations 95 and 96 can be substituted into equation 94 to obtain a nonstandard eigenvalue problem. Once the eigenvalues and eigenvectors of the system of equations have been found, equations 95 and 96 can be used to obtain $\bar{P}_n^c(\omega)$ and $\bar{P}_n^e(\omega)$. With these values, the mode shape of the multiple cavity system can be calculated.

Within cavity c:

$$F_{n'}^c(x_o) = \sum_n \frac{\bar{P}_n^c(\omega)\, F_n^e(x_o)}{M_n^c} \tag{97}$$

And within cavity e:

$$F_{n'}^e(x_o) = \sum_n \frac{\bar{P}_n^e(\omega)\, F_n^e(x_o)}{M_n^e} \tag{98}$$

Again, the normal modes and mode shapes for a complex cavity can be obtained by the process of component mode synthesis. The required input to the process is the hard wall normal modes and mode shapes of the subcavities which approximate the complex shape.

### 2.2.2 Generalized Acoustic Mass of the Multiple Cavity System

The generalized mass of the multiple cavity system, needed for the calculation of the internal pressure, is defined as

$$M^A_{nn'} = 1/V \int_{V'} F_n(x_o)\, F_{n'}(x_o)\, dV \qquad (99)$$

where $F_n(x_o)$ and $F_{n'}(x_o)$ are mode shapes of the multiple cavity system. Recall from equation 98:

$$F_n(x_o) = \sum_m \frac{P^v_m(\omega_n)\, F^v_m(x_o)}{M^{sc}_m}$$

$$F_{n'}(x_o) = \sum_r \frac{P^v_r(\omega_{n'})\, F^v_r(x_o)}{M^v_r}$$

where $P^v_m(\omega_n)$ and $P^v_r(\omega_{n'})$ are constraint constants from the acoustic component synthesis with v denoting the subvolume when used in conjunction with other variables and denoting the volume of the subvolume when used alone. Capital V denotes the volume of the multiple cavity system as a whole.

$$M^a_{nn'} = \frac{1}{V}\left(\int_V \sum_m \frac{P^v_m(\omega_n)\, F^v_m(x_o)}{M^v_r} \bullet \sum_r \frac{P^v_r(\omega_{n'})\, F^v_r(x_o)}{M^v_r}\right) dV \qquad (100)$$

Break this integral down into the sum of the integrals over the subvolumes of the cavity.

$$M^a_{nn'} = \sum_{v=1}^{nv} \frac{1}{V} \bullet \left[\int_v \sum_m \sum_r \frac{P^v_m(\omega_n)\, P^v_r(\omega_{n'})}{M^v_m M^v_r} F^v_m(x_o)\, F^v_r(x_o)\, dv\right]$$

nv = number of subvolumes in the multiple cavity system

v = subcavity.

$$M^{a}_{nn'} = \sum_{v=1}^{nv} \frac{1}{V} \bullet \left[ \sum_{m} \sum_{r} \frac{P^{v}_{m}(\omega_{n})\, P^{v}_{r}(\omega_{n'})}{M^{v}_{m}\, M^{v}_{r}} \int_{v} F^{v}_{m}(x_{o})\, F^{v}_{r}(x_{o})\, dv \right]$$

Since $F^{v}_{m}(x_{o})$ and $F^{v}_{r}(x_{o})$ are normal modes of the subcavity v, the integral is zero where $m \neq r$, and $v \cdot M^{v}_{m}$ where $m = r$. Hence,

$$M^{a}_{nn'} = \sum_{v=1}^{nv} \frac{1}{V} \left[ v \bullet \sum_{m} \frac{P^{v}_{m}(\omega_{n})\, P^{v}_{m}(\omega_{n'})}{M^{v}_{m}} \right] \qquad (101)$$

$P^{v}_{m}(\omega_{n})$ and $P^{v}_{m}(\omega_{n'})$ are known from multiple cavity component mode synthesis calculations. Since the modes of the multiple cavity system are also orthogonal, the generalized mass, $M^{a}_{nn'} = 0$ when $n \neq n'$.

### 2.2.3 Space-Averaged Pressure Over a Subvolume of a Multiple Cavity System

The space-averaged pressure squared over a subvolume of a multiple cavity system can be calculated. Recall equation 67:

$$p^{2}(x_{o}, \omega) = \frac{1}{2} \rho^{2} c^{4} \sum_{n} \sum_{n'} \frac{P_{n}(\omega)\, P^{*}_{n'}(\omega)}{M^{a}_{n}\, M^{a}_{n'}} F_{n}(x_{o})\, F_{n'}(x_{o})$$

Take the integral over the subvolume $V_{I}$,

$$p^{2}(x_{o}, \omega) = \frac{1}{2} \rho^{2} c^{4} \sum_{n} \sum_{n'} \frac{P_{n}(\omega)\, P^{*}_{n'}(\omega)}{M^{a}_{n}\, M^{a}_{n'}} \frac{1}{v} \int_{v} F_{n}(x_{o})\, F_{n'}(x_{o})\, dv \qquad (102)$$

Since $F_{n}(x_{o})$ and $F_{n'}(x_{o})$ are mode shapes of the multiple cavity system and not the subvolume, the volume integral is not necessarily zero when $n \neq n'$. To calculate the integral, recall that the multiple cavity mode shapes can be calculated from the constraint constants from the component mode synthesis.

$$F_{n}(x_{o}) = \sum_{m} \frac{P^{v}_{m}(\omega_{n})\, F^{v}_{m}(x_{o})}{M^{v}_{m}}$$

$$F_{n'}(x_o) = \sum_r \frac{P_r^v(\omega_{n'})\, F_r^v(x_o)}{M_r^v}$$

Substitute into the integral

$$\frac{1}{v} \int_v F_n(x_o)\, F_{n'}(x_o)\, dV_{sub} = \frac{1}{v} \int_v \sum_r \sum_m \frac{P_m^v(\omega_n)\, F_m^v(x_o)}{M_m^v}$$

$$\bullet \frac{P_r^v(\omega_{n'})\, F_r^v(x_o)}{M_r^v}\, dv$$

$$= \sum_r \sum_m \frac{P_m^v(\omega_{n'})\, F_r^v(\omega_{n'})}{M_m^v\, M_r^v}$$

$$\bullet \frac{1}{v} \int_v F_m^v(x_o)\, F_r^v(x_o)\, dv$$

Since $F_m^v(x_o)$ and $F_r^v(x_o)$ are mode shapes of the subvolume, v, the integral is zero when $m \neq r$ and $M_m^v$ when $m = r$. Hence,

$$\frac{1}{v} \int_v F_n(x_o)\, F_{n'}(x_o)\, dv = \sum_m \frac{P_m^v(\omega_n)\, P_m^v(\omega_{n'})}{M_m^v} \tag{103}$$

Substitute equation 103 into 102 to obtain

$$\left\langle p^2(x_o, \omega)\right\rangle = \frac{1}{2}\, \rho^2 c^4 \sum_n \sum_{n'} \frac{P_n(\omega)\, P_n^*(\omega)}{M_n^a\, M_{n'}^a}$$

$$\bullet \sum_m \frac{P_m^v(\omega_n)\, P_m^v(\omega_{n'})}{M_m^v} \tag{104}$$

For random excitation, take the expected value of equation 104:

$$\left\langle S_p(\omega)\right\rangle_v = \sum_n \sum_{n'} \frac{1}{2}\, \rho^2 c^4 \, \frac{E\left[P_n(\omega)\, P^*_n(\omega)\right]}{M^a_n\, M^a_{n'}} \bullet \left[\sum_m \frac{P^v_m(\omega_n)\, P^v_m(\omega_{n'})}{M^v_m}\right] \tag{105}$$

Recall the relationship expressed in equation 79.

$$1/2\ E\left[P_n(\omega)\, P^*_{n'}(\omega)\right] = A^2\, S_{pbl}(\omega) \sum_s \sum_r I_{ns}\, I^*_{n'r}\, J^2_{sr}$$

and substitute into equation 105 to obtain

$$\left\langle S_p(\omega)\right\rangle_v = \sum_n \sum_{n'} \rho^2 c^4 \, \frac{1}{M^a_n\, M^a_{n'}} \sum_m \left[\frac{P^v_m(\omega_n)\, P^v_m(\omega_{n'})}{M^v_m}\right] \bullet A^2\, S_{pbl}(\omega) \sum_s \sum_r I_{ns}\, I^*_{n'r}\, J^2_{sr}$$

Again, neglecting the cross-coupling terms, $J^2_{sr}$, as done in equation 81,

$$\left\langle S_p(\omega)\right\rangle_v = \rho^2 c^4 \sum_n \sum_{n'} \frac{1}{M^a_n\, M^a_{n'}} \left[\sum_m \frac{P^v_m(\omega_n)\, P^v_m(\omega_{n'})}{M^v_m}\right] \bullet A^2\, S_{pbl}(\omega) \sum_r I_{nr}\, I^*_{n'r}\, J^2_{rr} \tag{106}$$

The double summation of n and n' in equation 106 can be a very lengthy process. An approximation for the subcavity average internal pressure can be obtained by neglecting the cross terms nn'. This assumes

$$\sum_{m} P^{v}_{m}(\omega_n)\, P^{v}_{m}(\omega_{n'}) \ll \sum_{m} \left(P^{v}_{m}(\omega_n)\right)^2$$

which is the same as asserting

$$\int_{v} F_n(x_o)\, F_{n'}(x_o)\, dv \ll \int_{v} F^2_n(x_o)\, dv$$

Applying this assumption to equation 106,

$$\left\langle S_p(\omega) \right\rangle_v = \rho^2 c^4 \sum_{n} \frac{1}{M^a_n} \bullet C^v_{nn} \bullet A^2 S_{pbl}(\omega) \sum_{r} \left| I_{nr} \right|^2 J^2_{rr} \qquad (107)$$

where

$$C^v_{nn} = \sum_{m} \frac{\left(P^v_m(\omega_n)\right)^2}{M^v_m\, M^a_n}$$

### 2.2.4 Multiple Panels

When an enclosure is constructed of several walls, each having separate response characteristics, the internal pressure can be calculated by the linear superposition of the contributions from each panel. For example, the pressure at a point and frequency can be calculated by

$$\left\langle p(x_o, \omega) \right\rangle = \sum_{\text{panels}} \left( \frac{1}{2}\, \rho^2 c^4 \sum_{n} \frac{P^*_n(\omega)\, P_n(\omega)}{M^a_n} \right) \qquad (108)$$

Since the acoustic constants in equation 108 are independent of the panel structural response, the equation can be written

$$\left\langle p^2(x_o, \omega)\right\rangle = \frac{\rho^2 c^4}{2} \sum_n \frac{1}{M_n^a} \sum_{\text{panels}} \left(P_n^*(\omega)\, P_n(\omega)\right) \tag{109}$$

### 2.2.5 Modal Summations

The multiple summations required by the modal analysis method can become excessively time consuming if one sums over all the structural and acoustic modes at each band. Recall equation 82, which gives the space-averaged, band-averaged pressure squared in the volume

$$\int_{\omega_1}^{\omega_2} S_p(\omega) d\omega = A^2 \rho^2 c^4 \sum_n \frac{1}{M_n^a}$$

$$\cdot\; S_{pbl}(\omega_c) \sum_m J_{mm}^2(\omega_c) \int_{\omega_1}^{\omega_2} |I_{nm}|^2\, d\omega$$

where

$$|I_{nm}|^2 = \frac{A_f^2\, L_{nm}^2}{V^2 M_m^2} \cdot \frac{\omega^4}{\left((\omega_n^{a\,2} - \omega^2)^2 + 4\zeta_n^2\, \omega_n^{a\,2}\, \omega^2\right)\left((\omega_m^2 - \omega^2)^2 + 4\zeta_m^2\, \omega_m^2\, \omega^2\right)}$$

The further $\omega_n$ and $\omega_m$ are from the band of interest, the smaller value of the integral. This fact forces the series to converge to a solution. Criteria which limit the computations to only those modes that significantly contribute to the solution are developed in this section.

The outermost summation is over the acoustic modes of the cavity. Consider a frequency band centered at $\omega_c$ with $\omega_1$ and $\omega_2$ as the lower and upper frequency limits. The acoustic natural frequencies closest to the center frequency, $\omega_c$, will contribute the most to the solution. The magnitude of the frequency separation between $\omega_c$ and $\omega_n$ after which one can consider the acoustic modal contribution negligible is a function of the accuracy desired, the number of acoustic modes close to $\omega_c$, and the acoustic damping. When examining the acoustic modal summation, one must compare the acoustic modal contributions using an arbitrary structural mode as a constant. For simplicity, assume $\omega_m = \omega_c$, hence

$$\left|I_{nm}\right|^2 = \frac{A_f^2 L_{nm}^2}{V^2} \bullet \frac{\omega^2}{\left[\left(\omega_c^2 - \omega^2\right)^2 + 4\zeta_m^2\omega_c^2\omega^2\right]} \bullet \frac{\omega^2}{\left[\left(\omega_n^{a^2} - \omega^2\right)^2 + 4\zeta_n^2\omega_n^{a^2}\omega^2\right]} \tag{110}$$

Since $\omega_c \sim \omega$ over the one-third-octave band, $\omega_1$ to $\omega_2$,

$$\left|I_{nm}\right|^2 = \frac{A_f^2 L_{nm}^2}{V^2} \bullet \frac{\omega_c^2}{4\zeta_m^2\omega_c^4} \bullet \frac{\omega^2}{\left[\left(\omega_n^{a^2} - \omega^2\right)^2 + 4\zeta_n^2\omega_n^{a^2}\omega^2\right]} \tag{111}$$

Normalize $\left|I_{nm}\right|^2$ by $\dfrac{V^2\, 4\zeta_m^2\, \omega_c^2}{A_f^2 L_{nm}^2}$ and integrate over the one-third octave band around $\omega_c$ to obtain an acoustic modal proximity weighting factor, $W^a$,

$$W^a = \int_{\omega_1}^{\omega_2} \left(\frac{\omega^2}{\left(\omega_n^{a^2} - \omega^2\right)^2 + 4\zeta_n^2\,\omega_n^{a^2}\,\omega^2}\right) d\omega \tag{112}$$

By establishing a base weight, $W_b^a$, equal to the value of $W^a$ at the $\omega_n$ closest to $\omega_c$, a criterion for modal importance can be defined:

If $\dfrac{W^a}{W_b^a} < \epsilon$ then the $\omega_n$ is not important to the solution in that band,

where $\epsilon$ is some fraction of the contribution of the nearest acoustic natural frequency, $\omega_b^a$.

The structural criteria follow the same development to yield

$$W^{s} = \int_{\omega_1}^{\omega_2} \left( \frac{\omega^2}{\left(\omega_m^2 - \omega^2\right)^2 + 4\zeta_m^2\, \omega_m^2\, \omega^2} \right) d\omega \tag{113}$$

The weighting factor integral, W, can be analytically evaluated over any band of interest to obtain the bandwidth of importance:

$$\text{Band} = \left|\omega_c - \omega_n(\epsilon)\right| \tag{114}$$

$\omega_n(\epsilon)$ is the frequency above which the equation

$$W - W_b \leq \epsilon W_b \tag{115}$$

holds. $W_b$ in equation 115 is the weighting factor integral for the closest mode to the band. W is the weighting factor integral at the frequency $\omega_n(\epsilon)$.

To limit the extent of this task, the program implements this analysis technique with a few simplifying assumptions. In calculating the acoustic bandwidth of importance around each band of interest, the highest damping for any cavity mode is assumed for all the cavity modes. In calculating the structural bandwidth of importance around each band of interest, the highest damping for any mode of the structural wall of the cavity is also assumed for all the structural modes. The modal summations of each structure is considered separately.

### 2.2.6 Point Excitation

With use of the delta function, point excitation of the structural wall can be considered. In this section, the generalized driving force for both the deterministic and random cases will be defined for a point force. Let

| | | |
|---|---|---|
| | $x = x_f$ | be the location of the point excitation |
| and | $F(x_f, t)$ | be the time history of the force at that point. |

$$p^{e}(x_o, t) = \delta(x_o - x_f)\, F(x_f, t) \tag{116}$$

$\delta(x - x_f)$ is the delta function

$$Q_m^{bl}(t) = \iint_s p^e(x_o, t)\,\psi_m(x_o)ds \qquad \text{(eq. 37)}$$

$$Q_m^{bl}(t) = \iint_s \delta(x_o - x_f)\,F(x_f, t)\,\psi_m(x_o)ds \qquad (117)$$

Hence,

$$Q_m^{bl}(t) = F(x_f, t)\,\psi_m(x_f) \qquad (118)$$

This, of course, also translates to the frequency domain,

$$Q_m^{bl}(\omega) = F(x_f, \omega)\,\psi_m(x_f) \qquad (119)$$

For random vibration,

$$P_n(\omega) = \sum_m I_{nm}(\omega) \iint_s \delta(x_o - x_f)\,F(x_f, \omega)\,\psi_m(x_o)ds \qquad (120)$$

$$P_n^*(\omega) = \sum_s I_{ns}(\omega) \iint_s \delta(x_o - x'_f)\,F^*(x'_f, \omega)\,\psi_s(x'_o)ds \qquad (121)$$

Since $x'_f = x_f$ for point force excitation,

$$1/2\ E\left[P_n^*(\omega)\,P_n(\omega)\right] = \sum_s \sum_m I_{ns}^*(\omega)\,I_{nm}^*(\omega)\,E\left[\left|F(x_f, \omega)\right|^2\right] \bullet \psi_s(x_f)\,\psi_m(x_f) \qquad (122)$$

where $E\left[\left|F(x_f, \omega)\right|^2\right]$ is the expected value of the mean squared force at point $x_f$.

### 2.2.7 Reverberation Time

The low frequency formulation lends itself to the calculation of the reverberation time of an arbitrarily shaped cavity with walls of unequal absorption characteristics. The equations needed for the calculation of the reverberation time are presented below. This particular application was first presented by Dowell and is fully developed in reference 3. Several important points about reverberation time, absorption, and impedance are made in his paper based on equations also used in VIN's modal analytical model. However, only reverberation time will be discussed here. Recall equations 21 and 28:

$$p(x_o, t) = \rho c^2 \sum_n \frac{F_n(x_o)}{M_n^a} \bullet P_n(t) \tag{123}$$

and

$$\frac{\partial^2 P_n(t)}{\partial t^2} + \frac{A_c}{V} \rho c^2 \sum_r \frac{C_{nr}}{M_r^a} \frac{\partial P_r(t)}{\partial t} + \omega_n^{a^2} P_n(t) = 0 \tag{124}$$

where the RHS of equation 124 was set to zero to represent the unforced condition considered in reverberation time. All symbols are as previously defined.

Reverberation time is defined as the time required for the diffuse pressure in a room to decay 60 dB after the pressure generating source is turned off. Given initial conditions at $p(x_o,0)$, $\partial p/\partial t(x_o,0)$, the pressure in the room can be calculated with the above equations. One has several choices for these initial conditions because of the imprecise definition of "diffuse" pressure field. One could simply require the pressure to be initially uniform ($p(x_o, t) = \dot{p}(x_o,0) =$ constant), or the potential energy in each mode to be equal ($P_n^2(t=0)/M_n =$ const for all n), or the kinetic energy in each mode to be constant. In addition, one must specify where the pressure decay is to be measured or define an overall measure of room pressure, such as a volume averaged rms level.

$$p_{av} \equiv \left(1/V \int_V p^2(x_o, t)dV\right)^{1/2}$$

as developed in section 2.2.3, this results in

$$p_{av}(t) = \rho_o c_o^2 \left(\sum_n P_n^2(t) \Big/ M_n\right)^{1/2} \tag{125}$$

Dowell shows that the damping coupling between the modes is usually small, hence $C_{nr} \rightarrow 0$ and can be neglected. The controlling equation becomes

$$\frac{\partial^2 (P_n(t)}{\partial t^2} + \frac{A_a}{V} \rho c^2 \frac{C_{nn}}{M_n^a} \frac{\partial P_n(t)}{\partial t} + \omega_n^{a^2} P_n(t) = 0 \tag{126}$$

The solution to this equation for n > 0 is

$$P_n(t) \;=\; \exp\left(-\delta_{nn}\,\omega_n^a\, t\right)\left(P_n(0)\cos\left(\omega_n^a(1-\delta_{nn}^2)^{1/2}\; t\right)\right)$$

$$+\left(\left(\frac{\partial P_n(0)}{\partial t} + \delta_{nn}\,\omega_n^a\, P_n(0)\right)\Big/\left(\omega_n^a(1-\delta_{nn}^2)^{1/2}\right)\right)$$

$$\bullet\ \sin\left(\omega_n^a(1-\delta_{nn}^2)^{1/2}\; t\right) \qquad (127)$$

where $2\delta_{nn}\,\omega_n^a \equiv A_a\,\rho_o c_o^2\, C_{nn}/(V\,M_n)$, as before, if $\delta_{nn} \ll 1$, as is usually the case,

$$P_n(t) \;\approx\; \exp\left(-\delta_{nn}\,\omega_n^a t\right)\left(P_n(0)\cos\omega_n^a t\right)$$

$$+\left(\frac{\partial P_n(0)}{\partial t} + \delta_{nn}\,\omega_n^a\, P_n(0)\Big/\omega_n^a\right)\sin\omega_n^a t \quad (n > 0) \qquad (128)$$

For n = 0, the Helmholtz mode, the solution to the governing equation is

$$P_o(t) \;=\; \frac{\partial P_0(0)}{\partial t}\left(1 - \exp(-2\delta_0\,\omega_0^a\, t)\right)\Big/(2\delta_0\,\omega_0^a) + P_0(0) \qquad (129)$$

where $2\delta_0\,\omega_0^a \;=\; A_n\;\rho_o c_o^2\; C_{nn}\Big/(V\,M_n)\Big/2A_a \;\neq\; 0$

With appropriate selection of initial conditions, the space averaged reverberation time can be calculated. The terms required for the calculations are all also required for the modal method of noise transmission analysis. Hence, the reverberation time calculations can easily be added to the computer program VIN using equations 127, 128 and 129. Of course, the band filtered reverberation time can also be calculated.

### 2.2.7 Retransmission of Sound

The fundamental equations implicitly include the effect of the internal pressure on the net generalized force on the structural wall. Direct inclusion of this effect, however, couples the structural and acoustic equations (see equations 48 and 49). The effect of the internal pressure on the motion of the structural wall is often neglected to uncouple the equations (as in equation 62) and significantly simplify the calculations. An approximate allowance can be made for the retransmission of sound by noting that the process is essentially linear. The interior and exterior pressures, $p_i$ and $p_o$ respectively, are related by

$$\left(p_i^2\right)_v = A\, p_o^2,$$

where $()_v$ denotes in vacuo shell response (that is, the effect of interior pressure), is not considered. Counting interior pressure,

$$p_i^2 = A\left[p_o^2 - \left(p_i^2\right)_v\right].$$

The equation assumes the process is reversable. If only a single mode is considered, this is true. Since the present approximation has structural modes uncorrelated with each other, and acoustic modes are uncorrelated in the spatial average, this is a reasonable assumption. At low frequencies, there are few modes present, so the approximation is reasonable from this viewpoint as well. At high frequencies, where there are many overlapping modes, the SEA portion of the program is a more appropriate model for vehicle interior noise prediction.

## Section 3

## STATISTICAL ENERGY ANALYSIS

Theoretically, the model presented in section 2 is good for the entire frequency range. As a practical matter, the computation time required by the method will become prohibitively expensive as the number of structural and acoustical modes in each frequency band becomes large. The statistical energy analysis (SEA) method presented in this section is used in VIN when the acoustic modal density becomes sufficient to justify the required SEA assumptions. This particular SEA formulation is a modification of the high-frequency model used in PACES(4). It allows the calculation of the average noise level within predefined subvolumes of a vehicle given a random external pressure field on the vehicle structure. In VIN, the SEA subvolumes are defined to match those used in the low-frequency analysis portion of the program to facilitate the transition between the low- and high-frequency models. A very good summary of the general idea of SEA was given by Trudell and Yano(5) in the preface to a structurally oriented SEA computer program:

> Statistical Energy Analysis (SEA) is a powerful tool for estimating the high frequency vibration spectra of complex systems. The analysis method is based on the estimation of the power flow between idealized gross elements of a vibrating system. The method is statistical in that averaging assumptions are made with regard to distribution of energy within an element, distribution of resonant modes, and the coupling between elements. These assumptions greatly simplify the computational complexity associated with normal mode methods. These same assumptions impose the limitation and point response predictions cannot be made.
>
> The assumptions on which the method rests and their implications can be quite rigorously stated as follows:
>
> 1. The total vibrating system can be partitioned into SEA elements (with suitable boundary conditions) whose modes approximate the modes of the original vibrating system.
> 2. The modes of the elements of a system contain all of the vibratory energy of the system.
> 3. The energy in one frequency band of a system element is equally distributed among the modes of that element occurring in the frequency band.

4. Only modes occurring within the same frequency band are coupled.

5. For two coupled elements, all of the modes occurring in one of the elements in one frequency band are equally coupled to each mode occurring in the same frequency band in the other element.

Assumption 1 contains the fundamental existence basis for SEA: the concept of partitionability. This concept implies that a coupled vibrating system with system modes can be approximated by two or more separately idealized vibrating elements, each with its own independent mode set. These sets are coupled only in the sense of having power flow to and from each set across the partition boundary (later referred to as the "joint"). The approximation to this model exists in most structures having reflective boundaries in the higher frequencies. For example, a skin/stringer structure has higher order skin panel modes that are nearly the same frequency and shape as an ideally supported panel because the stringer is a comparatively massive boundary causing reflection of flexural waves from the skin panel. An SEA plate element could logically be equal to the panel area bounded by stringers or frames. Such elements will then have to be coupled with joint elements in order to develop an SEA model which emulates the vibratory power flow of the real structure.

(Another example is a structural/acoustical problem where the modes of the cavity and the modes of the structure can be considered separately.)

Assumption 3 is the most important simplifying assumption of SEA because it eliminates the necessity to calculate generalized modal forces and responses. The conditions implicit in this assumption are usually approximated by the higher order modes of a structure in a reasonable bandwidth, say 1/3 octave. One-third octave bands represent a reasonable compromise between the necessity to get a fairly large number of modes (>10) in the band for good statistics and the necessity to have some frequency response resolution in the vibration prediction. The number of modes in a unit bandwidth can be estimated for simple structural forms (such as beams, plates, etc.) using algebraic expressions for modal density such as those given in Section 4 of this report. Estimation of modal density in this way is a considerable simplification over normal mode methods.

Given SEA elements with the properties described above it is now necessary to join them to permit power flow between the modes of one element and the modes of another. This is done with a parameter called the coupling loss factor $\eta$ and leads to assumptions 4 and 5. Assumption 4 is directly linked to assumption 2 and the further assumption of a linear process. Assumption 5 follows directly from assumption 3 as part of the simplification associated with a statistical rather than explicit description of modes.

In this particular application (vehicle acoustics), an energy balance equation is written for each cavity of a multiple cavity system and a matrix equation is prepared.

$$\{W\} = [C]\{p^2\}, \tag{130}$$

where

$\{W\}$ is a column vector containing the system external input power to each cavity of the system

$\{p^2\}$ is a column vector of the internal space-averaged, band-averaged pressure squared for each cavity of the system

$[C]$ is a square matrix holding factors that account for the energy stored and dissipated within each subvolume of the multiple cavity system.

The band-average internal pressure squared is then found with

$$\{p^2\} = [C]^{-1}\{W\}$$

The derivation of each matrix will be fully described in this section.

## 3.1 Fundamental Model for Power Input Into Cavity from Structural Wall

A vehicle structure will respond to excitation by a random pressure field according to the frequency domain relation

$$W(x_o, \omega) = \int G(x_o \,|\, x'_o; \omega) \left[ p^e(x'_o, \omega) - P^i(x'_o, \omega) \quad dx'_o \right] \tag{131}$$

where

| | |
|---|---|
| $G(x_o \,|\, x'_o, \omega)$ | is the structure's Green's function |
| $p^2(x'_o, \omega)$ | is the external exciting pressure |
| $p^i(x'_o, \omega)$ | is the induced interior pressure on the structure |
| $W(x_o, \omega)$ | is the displacement of the structure |

The internal pressure field is related to the vehicle wall motion by$^{(4)}$

$$P^i(x'_o, \omega) = -\rho\omega^2 \int G_p(x_o \,|\, x'_o; \omega)\, W(x_o, \omega)\, dx_o \tag{132}$$

where $G_p(x_o|x'_o;\omega)$ is the Green's function for the vehicle's interior.

The external pressure field is the sum of the pressure imposed on the surface by external sources and the pressure resulting from the motion of the structure.(6)

$$p^e(x'_o,\omega) = P_{bl}(x'_o,\omega) + \rho\,\omega^2 \int G_p^e(x_o\,|\,x'_o;\omega)\; W(x_o,\omega)dx_o \tag{133}$$

where

| | |
|---|---|
| $G_p^e(x_o\,\vert\,x'_o;\omega)$ | is the exterior field Green's function with the source point on the structure |
| $P_{bl}(x'_o,\omega)$ | is the transformed pressure |

Define

$$W(x_o,\omega) = \sum_r q_r(\omega)\;\psi_r(x_o) \tag{134}$$

$$p^i(x_o,\omega) = \sum_r m\;D_r(\omega)\;\psi_r(x_o) \tag{135}$$

where

| | |
|---|---|
| $\psi_r(x_o)$ | is the in vacuum normal shell modes of the structure |
| m | is the areal mass |
| $D_r(\omega)$ | is the shell dynamics or modal acceleration term |

substituting equations 134 and 135 into equation 133, transferring all terms to the left-hand side, and changing one of the summation indices for clarity,

$$\left[\sum_r m\;D_r(\omega)\psi_r(x_o)\right] + \rho\omega^2 \int_{x_o} G_p^e(x_o\,|\,x'_o;\omega)\left[\sum_n q_n(\omega)\psi_n(\omega)\right]dx_o = 0 \tag{136}$$

which can also be written as

$$\left[\sum_r m\, D_r(\omega)\psi_r(x_o)\right] + \rho\omega^2 \left[\sum_n \int_{x_o} G_p^e(x_o \,|\, x_o'; \omega)\psi_n(x_o)dx_o\, q_n(\omega)\right] = 0 \qquad (137)$$

To determine the $q_n(\omega)$ for each frequency orthogonality may be used by multiplying through by $\psi_{r'}(x_o)$ and integrating over the surface of the shell

$$\int_{x_o}\left[\sum_r m\, D_r(\omega)\psi_r(x_o)\psi_{r'}(x_o)\right]dx_o + \rho\omega^2 \sum_n \left[\int_{x_o}\psi_{r'}(x_o)\right.$$

$$\left.\int_{x_o'} G_p^e(x_o|x_o'; \omega)\psi_n(x_o')dx_o'\, dx_o\right]$$

$$\bullet\; q_n(\omega) = 0 \qquad (138)$$

Because of the orthogonality, where

$$\int_{x_o} \psi_r(x_o)\, \psi_{r'}(x_o)dx_o = 0 \quad \text{if } r \neq r'$$

equation 138 becomes the fundamental acoustic equation

$$\int_{x_o} m\, D_r(\omega)\psi_{r'}^2(x_o)dx_o \quad + \rho\omega^2 \sum_n \left[\int_{x_o}\psi_{r'}(x_o)\right.$$

$$\left.\int_{x_o'} G_p^e(x_o\,|\,x_o'; \omega)\psi_n(x_o')dx_o'dx_o\right] q_n(\omega) = 0 \qquad (139)$$

Recall equation 131 and substitute equations 134 and 135 into it.

$$\sum_r \psi_r(x_o)\, q_r(\omega) = \int_{x_o} G(x_o\,|\,x_o'; \omega)\, p^e(x_o, \omega)dx_o$$

$$- \int_{x_o} G(x_o\,|\,x_o'; \omega)\left[\sum_r m\, D_r\, \psi_r(x_o)\right]dx_o \qquad (140)$$

This is the fundamental structural equation in terms of normal mode expressions. Proceeding, the definition of the Green's function of the structure as developed from LaGrangian equations is

$$G(x_o \,|\, x'_o; \omega) = \sum_r \frac{\psi_r(x_o)\, \psi_r(x'_o)}{M_r\, Y_r(\omega)} \tag{141}$$

where

| | |
|---|---|
| $M_r$ | is the modal mass defined as $\int_{x_o} m\, \psi_r^2(x) dx_o$ |
| $Y_r(\omega)$ | $\equiv (\omega_r^2 - \omega^2) - i\, \eta\, \omega_r^2$ |
| $\omega_r$ | is the natural frequency of mode r |
| $\eta$ | is the structural loss factor (energy dissipation term) |
| $\omega$ | is the exciting frequency |

Substitute equation 141 into 140.

$$\begin{aligned} \sum_r \psi_r(x_o)\, q_r(\omega) &= \int_{x_o} G(x_o \,|\, x'_o; \omega)\, p^e(x_o, \omega) dx_o \\ &- \underline{\underline{\int_{x_o} \left[ \sum_t \frac{\psi_t(x_o)\, \psi_t(x'_o)}{M_t\, Y_t(\;)} \right] \left[ \sum_r m\, D_r\, \psi_r(x_o)\; dx_o \right]}} \end{aligned} \tag{142}$$

Working with the underlined term of equation 142, combine the summations.

$$\sum_t \sum_r \frac{\psi_t(x)\, D_r(\omega)}{M_t\, Y_t(\omega)} \int_{x_o} m\, \psi_t(x_o)\, \psi_r(x_o) dx_o$$

Again, orthogonality simplifies things, and the term becomes

$$\sum_{t} \frac{\psi_t(x_o)\, D_t(\omega)}{M_t\, Y_t(\omega)} \int_{x_o} m\, \psi_t^2(x_o) dx_o$$

Since $\int_{x_o} m\, \psi_t^2(x_o) dx_o = M_t$, it further reduces to

$$\sum_{t} \frac{\psi_t(x_o)\, D_t(\omega)}{Y_t(\omega)}$$

Substitute this term back into equation 142 from whence it came.

$$\sum_{r} \psi_r(x_o)\, q_r(\omega) = \int_{x_o} G(x_o \,|\, x'_o; \omega)\, p^e(x_o) dx_o - \sum_{t} \frac{\psi_t(x_o)\, D_t(\omega)}{Y_t(\omega)} \qquad (143)$$

To further simplify equation 143, multiply through by $m\, \psi_s(x_o)$ and integrate over the surface to obtain

$$M_r\, q_r(\omega) + \frac{D_r(\omega)\, M_r}{Y_r(\omega)} = \int_{x_o} m\, \psi_r(x_o) \int_{x'_o} G(x_o \,|\, x'_o; \omega)\, P^e(x_o, \omega) dx'_o dx_o \qquad (144)$$

Substitute the equation for the Green's function of equation 141 into 144.

$$M_r q_r(\omega) + \frac{D_r(\omega)\, M_r}{Y_r(\omega)} = \int_{x_o} m\, \psi_r(x_o) \int_{x'_o} \sum_{t} \frac{\psi_t(x_o)\, \psi_t(x'_o)}{M_t\, Y_t}\, p^e(x_o, \omega) dx'_o dx_o$$

Rearrange

$$M_r\, q_r(\omega) + \frac{D_r(\omega)\, M_r}{Y_r(\omega)} = \sum_t \left[ \int_{x_o} \psi_t(x_o)\, P^e(x_o, \omega) dx_o \right]$$

$$\bullet\ \frac{1}{M_t\, Y_t} \int_{x_o'} m\, \psi_r(x_o')\, \psi_t(x_o') dx_o' \tag{145}$$

Orthogonality makes the right-hand side of equation 145 equal to zero for all $t \neq r$, hence

$$M_r\, q_r(\omega) + \frac{D_r(\omega)\, M_r}{Y_r(\omega)} = \frac{1}{Y_r} \int_{x_o} p^o(x_o)\, \psi_r(x_o, \omega) dx_o \tag{146}$$

This equation expresses the shell dynamics of the vehicle structure.

Define the generalized force on the structure.

$$Q_r(\omega) = \int_{x_o} p^e(x_o, \omega)\, \psi_r(x_o) dx_o \tag{147}$$

Substitute 147 into 146 and solve for the unknown $D_r(\omega)$.

$$D_r(\omega) = \frac{Q_r(\omega)}{M_r} - Y_r(\omega)\, q_r(\omega) \tag{148}$$

Equation 148 is simply a form of equation 131 obtained through several pages of contortions. This equation is used with a form of equation 132 by substituting equation 148 into equation 139. The result is an equation relating the modal response of a vehicle's shell to the internal acoustics of the vehicle (or cavity).

$$-Q_r(\omega) = \left( \rho\, \omega^2 \int_{x_o} \psi_r(x_o) \int_{x_o'} G_p(x_o \,|\, x_o'; \omega) \psi_r(x_o') dx_o' dx_o - M_r\, Y_r(\omega) \right) q_r(\omega)$$

$$+ \sum_{n \neq r} \left( \rho\, \omega^2 \int_{x_o} \psi_r(x_o) \int_{x_o'} G_p(x_o \,|\, x_o', \omega)\, \psi_n(x_o') dx_o' dx_o \right) q_n(\omega) \tag{149}$$

Then,

$$-Q_r(\omega) = \left(\rho\omega^2 I_{rr} - M_r Y_r(\omega)\right) q_r(\omega) + \sum_{n\neq r} \rho\omega^2 I_{rn}\, q_n(\omega) \tag{150}$$

where

$$I_{rn} = \int_{x_o} \psi_r(x_o) \int_{x'_o} G_p(x_o | x'_o; \omega)\, \psi_n(x'_o) dx'_o dx_o$$

Equation 150 assumes the external pressure distribution is explicitly defined over the surface. Since the reradiated pressure term of equation 133 is sometimes significant, the equations can be developed to include those effects for theoretical completeness. It should be recognized, however, that the reradiated pressure effect can be neglected in most cases of interest.

Substitute equation 133--the definition of the external pressure field in terms of blocked pressure and reradiated pressure--into equation 147.

$$Q_r(\omega) = -\int_{x_o} \left[ P_{bl}(x_o, \omega) + \rho\omega^2 \int_{x'_o} G_p^e(x_o | x'_o, \omega)\, W(x'_o, \omega)\, dx'_o \right] \psi_r(x_o) dx_o \tag{151}$$

Then

$$\begin{aligned} Q_r(\omega) = {} & \int_{x_o} P_{bl}(x_o, \omega)\, \psi_r(x_o) dx_o \\ & + \rho\omega^2 \int_{x_o} \psi_r(x_o) \int_{x'_o} G_p^e(x_o | x'_o, \omega)\, W(x'_o, \omega) dx'_o \end{aligned} \tag{152}$$

Define

$$Q_r^{bl}(\omega) = \int_{x_o} P_{bl}(x_o, \omega)\, \psi_r(x_o) dx_o \tag{153}$$

Recall equation 134 and substitute both into equation 152.

$$\begin{aligned} Q_r(\omega) &= Q_r^{bl}(\omega) + \rho\omega^2 \int_{x_o} \psi_r(x_o) \int_{x'_o} G_p^e(x_o \,|\, x'_o, \omega) \sum_t q_t(\omega)\, \psi_t(x'_o)\, dx'_o \\ &= Q_r^{bl}(\omega) + \rho\omega^2 \Bigg[ \sum_t \int_{x_o} \psi_r(x_o) \int_{x'_o} G_p^e(x_o \,|\, x'_o; \omega)\, \psi_t(x'_o)\, dx'_o \\ &\quad \bullet\ q_t(\omega) \Bigg] \end{aligned} \tag{154}$$

Define

$$J_{rt} = \int_{x_o} \psi_r(x_o) \int_{x'_o} G_p^e(x_o \,|\, x'_o; \omega)\, \psi_t(x'_o)\, dx'_o \tag{155}$$

Substitute equations 155 into equation 154

$$Q_r(\omega) = Q_r^{bl}(\omega) + \rho\omega^2 \sum_t J_{rt} \bullet q_t(\omega) \tag{156}$$

Substitute 156 into equation 150.

$$\begin{aligned} &\left(\rho\omega^2 I_{rr} - M_r\, Y_r(\omega)\ q_r(\omega)\right) + \sum_{n \neq r} \rho\omega^2 I_{rn}\, q_n(\omega) \\ &\qquad + \rho\omega^2 \sum_t J_{rt} \bullet q_t(\omega) = -Q_r^{bl}(\omega) \end{aligned} \tag{157}$$

Combine the t summation with the r and n.

$$\begin{aligned} &\left(\rho\omega^2 (I_{rr} + J_{rr}) - M_r\, Y_r(\omega)\right) q_r(\omega) + \sum_{n \neq r} \rho\omega^2 (I_{nr} + J_{nr}) q_n(\omega) \\ &\qquad = -\, Q_r^{bl}(\omega) \end{aligned} \tag{158}$$

ORIGINAL PAGE IS
OF POOR QUALITY

Equation 158 defines the shell dynamics given an external blocked pressure field. It is essentially the same equation that was used in the low frequency model (equation 41). The matrix form of equation 158 is

$$\left[a_{rn}\right]\left\{q_r(\omega)\right\} = \left\{-Q_r^{bl}(\omega)\right\}$$

and has the solution

$$\left\{q_r(\omega)\right\} = \left[\alpha_{rn}\right]\left\{-Q_r^{bl}(\omega)\right\} \tag{159}$$

where $\alpha_{rn} = \left[a_{rn}\right]^{-1}$

Substitute for $q_r(\omega)$ in equation 134 from equation 159.

$$W(x_o, \omega) = -\sum_r \sum_n \alpha_{rn} Q_r^{bl}(\omega) \psi_r(x_o) \tag{160}$$

The one-sided cross-power spectral density of displacement is defined:

$$S_w(x_o | x_o'; \omega) = \lim_{T\to\infty} \frac{2}{T} \frac{1}{2\pi} W(x_o, \omega) W^*(x_o', \omega) \tag{161}$$

The Fourier transform is obtained over a sample length, T. All terms shown to be an explicit function of $\omega$ are implicitly a function of the sample length. Random processes are fully described in the frequency regime as the sample length is allowed to go to infinity and the random variable approaches a limiting value.

Substituting for $W(x_o, \omega)$ from equation 160,

$$S_w(x_o | x_o'; \omega) = \lim_{T\to\infty} \frac{2}{T} \frac{1}{2\pi} \sum_r \sum_n \sum_s \sum_m \alpha_{rn} \alpha_{sm}^* \psi_r(x_o) \psi_s(x_o') \bullet Q_r^{bl}(\omega) \bullet Q_s^{bl}(\omega) \tag{162}$$

Recall that

$$Q_r^{bl}(\omega) \bullet Q_s^{bl}(\omega) = \int_{x_o}\int_{x'_o} P_{bl}(x_o,\omega)\, P^*_{bl}(x'_o,\omega)\, \psi_r(x_o)\, \psi_s(x'_o) dx'_o dx_o$$

Let

$$S_{pbl}(x_o \,|\, x'_o;\omega) = \lim_{T\to\infty} \frac{2}{T}\, \frac{1}{2\pi}\, P_{bl}(x_o,\omega)\, P^*_{bl}(x'_o,\omega) \tag{163}$$

Then

$$\begin{aligned} S_w(x_o \,|\, x'_o;\omega) = {} & \sum_r \sum_n \sum_s \sum_m a_{rn}\, a^*_{sm}\, \psi_r(x_o)\, \psi_s(x'_o) \\ & \bullet \int_{x_o}\int_{x'_o} S_{pbl}(x_o \,|\, x'_o;\omega)\, \psi_r(x_o)\, \psi_s(x'_o) dx'_o dx_o \end{aligned} \tag{164}$$

which is the one-sided cross-power spectral density of displacement.

The net power radiated into the cavity can now be calculated. The internal cross-power spectral density is

$$S_p(x_o \,|\, x'_o;\omega) = \lim_{T\to\infty} \frac{2}{T} \left(\frac{i\omega}{2\pi}\right) p^i(x_o,\omega)\, W^*(x'_o,\omega) \tag{165}$$

Substitute for $p^i(x_o,\omega)$ from equation 132.

$$\begin{aligned} S_p(x_o \,|\, x'_o;\omega) = {} & \lim_{T\to\infty} \frac{2}{T} \left(\frac{i\omega}{2\pi}\right) \\ & - \rho\omega^2 \int_{x''_o} G_p(x_o \,|\, x''_o;\omega)\, W(x_o,\omega)\, W^*(x''_o,\omega) dx''_o \end{aligned} \tag{166}$$

ORIGINAL PAGE IS
OF POOR QUALITY

Using equation 161, equation 166 becomes

$$S_p(x_o | x'_o; \omega) = i \rho \omega^3 \int_{x''_o} G_p(x_o | x''_o; \omega) S_w(x''_o | x'_o; \omega) dx''_o \tag{167}$$

Let $x''_o \rightarrow x_o$ and integrate $S_p(x_o | x'_o; \omega)$ over the transmitting area of the structure to obtain the radiated power spectral density.

$$W_{rad}(\omega) = -i \rho \omega^3 \int_{x_o} \int_{x'_o} G_p(x_o | x'_o; \omega) S_w(x'_o x_o; \omega) dx'_o dx_o \tag{168}$$

Using equation 164,

$$W_{rad}(\omega) = -i \rho \omega^3 \sum_r \sum_n \sum_s \sum_m \alpha_{rn} \alpha^*_{sm} \int_{x_o} \int_{x'_o} G_p(x_o | x'_o; \omega) \psi_r(x_o) \psi_s(x'_o) dx'_o dx_o$$

$$\cdot \int_{x''_o} \int_{x'''_o} S_{pbl}(x''_o | x'''_o; \omega) \psi_n(x''_o) \psi_m(x'''_o) dx''_o dx'''_o \tag{169}$$

which becomes

$$W_{rad}(\omega) = -i \rho \omega^3 A^2 S_{pbl}(\omega) \sum_{r,n,s,m} \alpha_{rn} \alpha^*_{sm} I_{rs}(\omega) J^2_{nm}(\omega) \tag{170}$$

where

$$I_{rs}(\omega) = \int_{x_o} \int_{x'_o} G_p(x_o | x'_o; \omega) \psi_r(x_o) \psi_s(x'_o) dx'_o dx_o$$

$$J^2_{nm} = \frac{1}{A^2 S_{pbl}(\omega)} \int_{x_o} \int_{x'_o} S_{pbl}(x_o | x'_o; \omega) \psi_n(x_o) \psi_m(x'_o) dx'_o dx_o$$

$S_{pbl}(\omega)$ is the external blocked pressure spectrum and A is the surface area.

$J^2_{nm}$ is termed the joint acceptance. The term was also used in the modal analysis portion of VIN (see equation 78). The methods used to calculate the joint acceptance in the low frequency regime still apply. In addition, empirical techniques can be used successfully as the modal density becomes great and SEA approximations become valid.

Two important assumptions can usually be made to significantly simplify the calculation of the net power into the cavity. The first is to assume weak coupling and the second is to neglect cross-acceptance terms. The following excerpt from the PACES analytical model presentation(3, pp. 20-22) provides an excellent description and defense of these assumptions. Making these assumptions, equation 170 becomes

$$W_{rad}(\omega) = -\rho\omega^3 A^2 S_{pbl}(\omega) \sum_r |\alpha_{rr}|^2 I_{rr}(\omega) J^2_{rr}(\omega) \tag{171}$$

where

$$|\alpha_{rr}| = \frac{1}{\left(M_r Y_r(\omega) - \rho\omega^2 (J_{rr} + I_{rr})\right)}$$

> It is common, in the analysis of acoustic transmission from a structure to a cavity, to assume that the coupling is weak when the fluid in the cavity is gaseous. Under this assumption the coupling between structure and cavity can be calculated using the in vacuo panel resonance frequencies and the blocked, or rigid wall, resonant response of the cavity. Mathematically, this means that the power flow between a mode of the structure and a mode of the cavity can be evaluated without including the interaction of any other mode. The assumption of weak coupling will be made in the development of the present analytical model for the payload bay acoustics.
>
> Having made this assumption, some justification should be provided. Unfortunately, this is difficult in general terms, although the results of Lyon and Maidanik(7) provide at least a sufficient condition for weak coupling. The condition is
>
> $$B_{rn} \ll \Delta\omega_r \text{ and } B_{rn} \ll \Delta\omega_n$$
>
> where
>
> $$B_{rn} = \left[\frac{c_o^2}{VM\,\gamma_r\,\gamma_n}\right]^{1/2} A\,L_{nr}$$
>
> V is the volume of the cavity, M the total mass of the structure of area A, $\gamma_r = 1/4$ and $\gamma_n = 1/8, 1/4, 1/2$ or 1 depending on mode order. Also $\Delta\omega_r$ and $\Delta\omega_n$ are the structural and acoustic mode bandwidths respectively. The

function $L_{nr}$ is the coupling factor between the structure and the cavity... [as defined in section 2, equation 25].

Applying this criterion to the Shuttle payload bay, it is seen that the criterion is not satisfied in the lowest frequency bands of interest. However, there are two additional factors to be considered. Firstly, effects of strong coupling will be important only when the structural mode is a volume-displacing mode. Such modes constitute only one-quarter of the structural modes; weak coupling can be assumed for the other three-quarters.

Secondly, there is evidence(8) that strong coupling will be destroyed if there are air leaks in the cavity, and, in practice, the payload bay will not be airtight. Therefore, it appears that the assumption of weak coupling is reasonable for the acoustic model of the payload bay. In VIN this model is only used in the higher modal density regime where the weak coupling criteria are easily met.

It should be emphasized that the assumption of weak coupling, i.e., no acoustic coupling of structural modes, in no way excludes so-called well-coupled acoustic and structural modes, which occur(7,9) when acoustic and structural modes have "maximum proximate mode coupling". That is, the resonance frequencies of the structural cavity modes are closely spaced relative to the modal bandwidths. The condition for well-coupled modes is variously written as(7)

$$|\omega_n^2 - \omega_r^2| < (\Delta\omega_n + \Delta\omega_r)$$

or(10)

$$2\,|\omega_n - \omega_r| < (\Delta\omega_n + \Delta\omega_r).$$

It is appropriate at this stage to include also a brief discussion of the cross-acceptance, since this also is a structure-fluid coupling function. Wilby(10) has compared contributions from joint and cross acceptances for lightly damped rectangular panels exposed to either subsonic turbulent boundary layer or convected acoustic plane wave excitation. In almost all cases the cross acceptance contribution to the panel response power spectral density is negligible. This is true both at frequencies close to resonance frequencies and at frequencies away from resonances (the latter being the more critical condition). Thus, within the accuracy of the analytical model, cross acceptance terms can be neglected (i.e., $j_{tn}^2(\omega) \approx 0,\ t \neq n$).

## 3.2 Adaptation of Power Input Model to Statistical Energy Analysis Form

The previous section developed a modal analysis equation for the power radiated through the walls of a cavity from an external pressure field. It must now be modified into statistical form for use when the vehicle's acoustic modal density becomes large. As a first step in this modifiction, energy loss from the structure caused by interaction with the internal cavity air will be neglected ($\rho\omega^2 I_{rr} \approx 0$). Also, the structural energy loss caused by external acoustic radiation of energy will be combined with the structural damping loss factor $\eta$. Hence, realizing only the real power is of interest, the power radiated into the cavity is

$$W_{rad}(\omega) = \rho\omega^3 A^2 S_{pbl}(\omega) \sum_r \frac{I_m\left(I_{rr}(\omega)\right) J_{rr}^2(\omega)}{\left|M_r Y_r(\omega)\right|^2} \tag{172}$$

where $I_m\left(I_{rr}(\omega)\right)$ is the imaginary part of $I_{rr}(\omega)$.

When the acoustic mode count within a band becomes sufficiently dense(2, p. 41)

$$I_m\left(I_{rr}(\omega)\right) = R_r^{int}(\omega)\Big/4\rho\omega \tag{173}$$

and since

$$R_r^{int}(\omega) = \frac{2}{\pi}\,\frac{\rho\omega^2}{C_o}\,A^2\,J_r^{2^{int}}(\omega) \tag{174}$$

$$I_m\left(I_{rr}(\omega)\right) = \frac{A^2\omega}{2\pi C_o}\,J_r^{2^{int}}(\omega) \tag{175}$$

Substitute equation 175 into equation 172 along with

$$W_{rad}(\omega) = \frac{\rho A^4}{2\pi C_o}\,S_{pbl}(\omega) \sum_r \frac{J_r^2(\omega)\,J_r^{2^{int}}(\omega)}{M_r^2} \bullet \frac{\omega^4}{\left|Y_r(\omega)\right|^2} \tag{176}$$

The internal joint acceptance, $J_r^{2^{int}}(\omega)$, the coupling of the motion of the structure with the internal pressure at the structural/acoustical interface, is equal to the joint acceptance with a reverberant field in the higher frequency range.

The power flowing through the wall structure into the cavity in the band $\Delta\omega$ with center frequency $\omega_c$ is, therefore,

$$\int_{\omega_1}^{\omega_2} W_{rad}(\omega)d\omega = \frac{\rho A^4}{2\pi C_o} \cdot \left[ S_{pbl}(\omega_c) \sum_r \frac{J_r^2(\omega_c)\, J_r^{2^{rev}}(\omega_c)}{M_r^2} \cdot \int_{\omega_1}^{\omega_2} \frac{\omega^4}{|Y_r|^2} \right] d\omega \qquad (177)$$

where

$S_{pbl}(\omega_c)$, $J_r^2(\omega_c)$, and $J_r^2(\omega_c)$ are all assumed to vary slowly over the band.

The solution to equation 177 can be broken down into the summation over three types of structural modes: those modes resonant below the band, those resonant in the band, and those resonant above the band. Once the structural modal density becomes relatively high, those modes above the band can be neglected with little adverse effect on accuracy. Hence,

$$W_{rad} = \omega_{rad}^{nr} + \omega_{rad}^{res} \qquad (178)$$

$W_{rad}^{nr}$ is power from modes resonant below the band

$W_{rad}^{res}$ is the power from modes resonant in the band

$$W_{rad}^{nr} = S_{pbl}(\omega_c) \bullet \frac{\rho A^4}{2\pi C_o} \sum_{r<band} \frac{J_r^2(\omega_c)\, J_r^{2^{rev}}(\omega_c)}{M_r^2} \bullet \int_{\omega_1}^{\omega_2} \frac{4}{|Y_r(\omega)|^2}\, d\omega \qquad (179)$$

$$W_{rad}^{res} = \frac{\rho A^4}{2\pi C_o} \left[ S_{pbl}(\omega_c) \bullet n_r \bullet \left\langle \frac{J_r^2(\omega_c)\, J_r^{2^{rev}}(\omega_c)}{M_r^2} \right\rangle_r \bullet \int_{\omega_1}^{\omega_2} \frac{\omega^4}{|Y_r(\omega)|^2}\, d\omega \right] \qquad (180)$$

where

$\langle\,\rangle_r$ denotes average values of the enclosed terms over the band of interest

$n_r$ is the structural modal density in the band of interest

Evaluation of the integrals over frequency in equation 179 is carried out analytically in the same way as the identical integral in section 2, equation 82. The integrals over frequency in equation 180 can be estimated by

$$\int_{\omega_1}^{\omega_2} \frac{\omega^4}{Y_r(\omega)^2}\, d\omega \simeq \int_{-\infty}^{\infty} \frac{\omega^4}{|Y_r(\omega)|^2}\, d\omega$$

$$\approx \frac{\pi \omega_c}{2\eta} \qquad (181)$$

The band-limited external power input to cavity k of a multiple cavity system can be estimated with the equation

$$W(k) = \sum_{s} \Bigg[ S_{pbl}(\omega_c) \cdot \frac{\rho A^4}{2\pi C_o} \cdot \sum_{r<\text{band}} \frac{J_r^2(\omega_c)\, J_r^{2^{rev}}(\omega_c)}{M_r^2} \cdot \int_{\omega_1}^{\omega_2} \frac{\omega^4}{|Y_r(\omega)|^2}\, d\omega + S_{pbl}(\omega_c) \cdot \frac{\rho A^4}{2\pi C_o} \cdot n_r \cdot \left\langle \frac{J_r^2(\omega_c)\, J_r^{2^{rev}}(\omega_c)}{M_r^2} \right\rangle_r \cdot \frac{\pi \omega_c}{2\eta} \Bigg]_{\text{surface } s} \tag{182}$$

where

s is adjacent to the volume k

W(k) is the system external power into cavity k of a multiple cavity system

The relative significance of the input power from a nonresonant mode decreases rapidly the further the nonresonant mode is from the band of interest. Figure 1 clearly demonstrates this fact. If two or more modes occur within the band of interest, the modes occurring outside the band will provide relatively little to the overall sum. At most, the modes in the two previous bands will be of importance if the number of structural modes in the band of interest are sufficient for SEA approximations. Hence, the power input from modes not resonant in the band can be estimated by

$$W_{rad}^{nr} \approx \sum_{b=(\text{band}-2)}^{\text{band}} \frac{\rho A^4}{2\pi C_o} \cdot S_{pbl}(\omega_c) \cdot n_b \cdot \left\langle \frac{J_b^2(\omega_c)\, J_b^{2^{rev}}(\omega_c)}{M_b^2} \right\rangle_b \cdot \int_{\omega_1}^{\omega_2} \frac{\omega^4}{|Y_b(\omega)|^2}\, d\omega \tag{183}$$

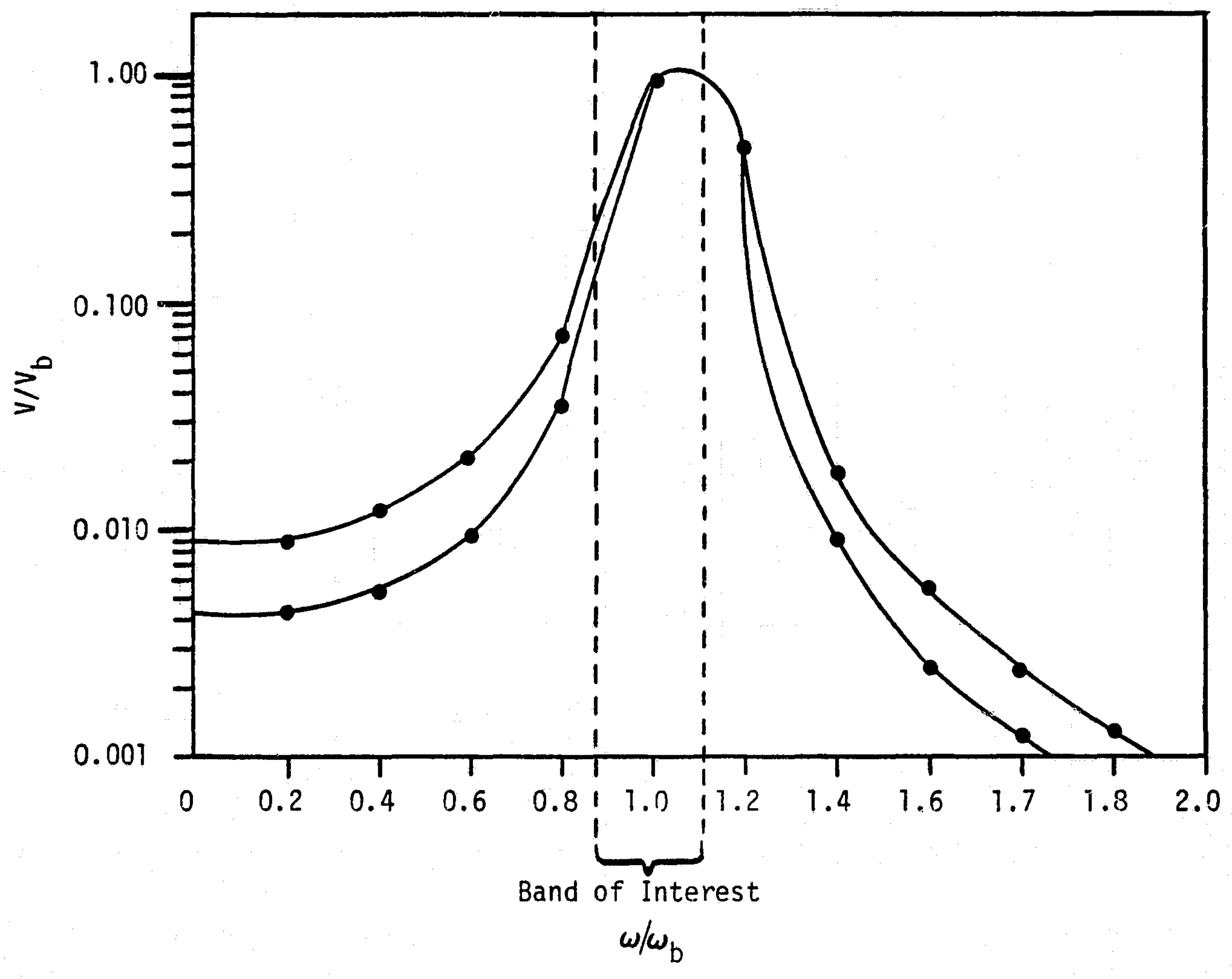

where $\omega/\omega_b$ - ratio of the modal natural frequency to the center frequency of the band of interest.

$V/V_b$ - ratio of the intergral over the band of interest of a mode at $\omega/\omega_b$ to the integral over the band of interest of a mode at the center frequency of the band of interest.

Figure 1. Modal Contribution to the Band of Interest

where

$b$ is index designating the band containing the "nonresonant" modes

$\omega_c$ is the center frequency of the band of interest, r

$n_b$ is the modal density in the band b below the band of interest

$|Y_b(\omega)|^2$ is the typical response characteristic of a mode in band b.

$\langle\,\rangle_b$ is the average value of the bracketed terms in the band b

The final equation for the system external power input into volume K of a multiple cavity (and multiple surface) system becomes (substitute equation 183 into 182)

$$W(K) = \sum_s \Bigg[ S_{pbl}(\omega_c) \cdot \left( \frac{\rho A^4}{2\pi C_o} \sum_{b=(band-2)}^{band} n_b \cdot \left\langle \frac{J_b^2(\omega_c)\, J_b^{2^{rev}}(\omega_c)}{M_b^2} \right\rangle_b \cdot \int_{\omega_1}^{\omega_2} \frac{\omega^4}{|Y_b(\omega)|^2}\, d\omega \right. + \frac{\rho A^4}{2\pi C_o} \cdot n_r \cdot \left\langle \frac{J_r^2(\omega_c)\, J_r^{2^{rev}}(\omega_c)}{M_r^2} \right\rangle_r \cdot \frac{\pi \omega_c}{2\eta} \Bigg]_{surface\ s} \tag{184}$$

Often, semiempirical methods are used to estimate the joint acceptance for various external pressure field/surface element-type combinations. When this is done, estimations for $J_b^2(\omega_c)$ are seldom available. $J_b^2(\omega_c)$, then, must be approximated by $J_b^2(\omega_b)$, where $\omega_b$ is the center frequency of band b. If the exterior pressure field magnitude is expressed in terms of band-limited mean-square pressure, the $S_{pbl}(\omega_c)$ is replaced in equation 184 by the band level divided by the bandwidth.

### 3.3 Power Dissipation from the Cavity

The previous two sections developed equations for the calculation of the system external power transfer through the structural walls into the cavity (the input power matrix $\{W\}$). This section will develop the SEA expressions for the power transferred from or dissipated in the cavity. Power can be dissipated from a cavity through (1) the structural walls adjacent to the cavity; (2) openings to adjacent cavities--this may be a positive or negative; that is, power can also flow into the cavity through openings--(3) absorption of power by the cavity wall surfaces. Expressions for each of these modes of power "dissipation" will be developed for use in the power balance equation and will form the coefficient matrix, $[C]$.

Expanding on the introduction, define

$$\begin{aligned} C(k,k) &= \sum_j C_j(k,k) + C_\alpha(k,k) + \sum_\ell C_\ell(k,k) \\ C(k,i) &= \sum_\ell C_\ell(k,i) \end{aligned} \tag{185}$$

where

$C_j(k,k)$ - Coefficient for power transferred out of cavity k through wall j of the cavity

$C_\alpha(k,k)$ - Coefficient for power absorbed in cavity k by the surfaces of the cavity

$\sum_\ell C_\ell(k,k)$ - Coefficient for power transmitted from cavity k to an adjacent cavity through opening $\ell$

$\sum_\ell C_\ell(k,i)$ - Coefficient for power transmitted from cavity i to cavity k through opening $\ell$

### 3.3.1 Power Transferred from the Cavity Through the Structural Walls

Outward transmission of power through a structural wall is simply the reverse of the input power process.

$$W_{out} = \pi A^2 n_r \left\langle \frac{J_r^{2\,rev}(\omega_c)}{M_r} \right\rangle_r \tag{186}$$

assuming the internal joint acceptance approaches the joint acceptance for reverberant excitation and the power transferred out of the volume due to nonresonant modes is negligible in the SEA regime.

The total power transferred out through the structural walls j of cavity k is a linear summmation over all walls adjacent to the cavity.

$$\sum_j C_j(k,k) = \sum_j \left[ \pi A^2 n_r \left\langle \frac{J_r^{2\,rev}(\omega_c)}{M_r} \right\rangle_r \right]_{\text{surface } j} \tag{187}$$

### 3.3.2 Power Transferred Through the Openings of the Cavity

A very rough estimate of the power transmitted through the openings in a cavity to or from other cavities of the multiple cavity system can be obtained using Green's function concepts and requiring the pressure at the opening between cavities to be equal. The conductance of an opening is defined as

$$\Gamma = \rho C_o A \,\mathrm{Re} \left\{ \left( \int_{x_o} \left( P_n(x_o) \big/ V_n(x_o) \right) dx_o \right)^{-1} \right\} \tag{188}$$

where

$V_n(x_o)$ is the particle velocity at A due to mode n of volume 1

$P_n(x_o)$ is the particle pressure at A due to mode n of volume 1

Pressure is calculated from the Green's function by(4, p. 375)

$$p(x_o) = i\omega\rho \int_{x_o} G_1(x_o | x'_o)\, V_n(x'_o)dx'_o$$

$$= -\, i\omega\rho \int_{x_o} G_2(x_o | x'_o)\, V_n(x'_o)dx'_o \tag{189}$$

where

$G_1$ and $G_2$ are the Green's functions of the cavities connected by the opening

$V(x'_o)$ is an imposed velocity at the opening

Let $G'_1(x_o | x'_o)$ be $G_1(x_o | x'_o)$ with the n-th term deleted. Then from equation 141,

$$G'_1(x_o | x'_o) = \sum_{m \neq n} \frac{\psi_m(x_o)\, \psi_m(x'_o)}{M_m\, Y_m(\omega)}$$

Hence,

$$i\omega\rho \int_{x_o} G_1(x_o | x'_o)\, V_m(x_o)dx_o = P_n(x'_o) + ik\, \rho C_o \int_{x_o} G'_1(x_o | x'_o)\, V_n(x_o)dx_o$$

Solving for $P_n(x'_o)$

$$P_n(x'_o) = -\, i\omega\rho \int_{x_o} G'_1(x_o|x'_o)\, G_1(x_o|x'_o)\, V_n(x_o)dx_o \tag{190}$$

Substitute equation 190 into 188.

$$\Gamma = \rho C_o A \,\mathrm{Re}\left\{ -i\omega\rho \int_{x_o}\int_{x'_o} \Big( \big(G'_1(x'_o|x_o) + G_2(x'_o|x_o)\big) \cdot \big(V_n(x_o)/V_n(x'_o)\big)\, dx_o\, dx'_o \Big)^{-1} \right\} \tag{191}$$

Assuming $V_n(x_o) = V_n(x'_o)$ = constant and that the subvolumes have sufficiently large wall losses, Morse and Ingard$^{(4)}$ state

$$-i\omega\rho \int_{x_o} \int_{x'_o} \left( G'_1(x'_o|x_o) + G_2(x'_o|x_o)dx_o \right) dx'_o \simeq 2Z_c \tag{192}$$

where $Z_c$ is the impedance of a baffled plane piston of area A radiating into two half spaces and is

$$Z_c = (\theta - iX)A\rho C_o \tag{193}$$

This yields

$$\Gamma = \rho C_o A \ \mathrm{Re}\left[(2Z_c)^{-1}\right] = \frac{\theta}{2(\theta^2 + X^2)} \tag{194}$$

where

$\theta$ is the normalized reactance of the opening

and $X$ is the normalized resistance of the opening

The power transferred through the opening can be calculated by

$$W_c = \frac{A}{2\rho C_o} \int_{x_o} \frac{\theta}{(\theta^2 + X^2)} \bullet p(x_o)dx_o \tag{195}$$

where $p(x_o)$ is the pressure at the opening and A is the area of the opening.

In the high frequency, high modal density regime, SEA approximations along with the above developments to yield

$$W_c = \frac{A}{2\rho C_o} \frac{\theta}{(\theta^2 + X^2)} \bullet T \bullet \left( \langle p_1^2 \rangle - \langle p_2^2 \rangle \right) \tag{196}$$

Where $\langle p_1^2 \rangle$ and $\langle p_2^2 \rangle$ are the space-averaged band-averaged pressure in cavities 1 and 2 respectively and $T \simeq 1/2$ given the case of many oblique modes. Hence, for the high frequency regime where there are many oblique modes,

$$C_\ell(k, k) = \frac{A_\ell}{4\rho C_o} \left( \frac{\theta_\ell}{\left(\theta^2 + \chi^2\right)} \right) \tag{197}$$

and
$$C_\ell(k, i) = - \frac{A_\ell}{4\rho C_o} \left( \frac{\theta_\ell}{\left(\theta_\ell^2 + \chi_\ell^2\right)} \right)$$

$\ell$ - is opening number

$A_\ell$ - area of opening $\ell$

$\theta_\ell$ - normalized resistance of opening $\ell$

$\chi_\ell^2$ - normalized reactance of opening $\ell$

Estimates for the conductance are only available for simple opening geometries. When the acoustic wavelength is short compared to the opening size, the conductance is somewhat shape independent and primarily a function of total area. The openings should offer very little resistance to the flow of acoustic power between subvolumes. The important aspect of the conductance estimate is that the relative resistances of the several cavity openings are roughly estimated. This defines the distribution of acoustic power between the subvolumes.

### 3.3.3 Power Absorbed by the Walls of the Cavity

The power absorbed by the walls of the cavity is an extremely important part of the SEA calculations. The inaccuracies associated with the calculation of this term can far outweigh the effects of all other SEA approximations combined. The power absorbed by the walls of the cavity is

$$W_{abs} = \frac{1}{2\rho C_o} \sum_\ell A_\ell \langle P_\ell^2 \rangle_A \, \epsilon_\ell \tag{198}$$

where

$A_\ell$ is the area of surface

$\epsilon_\ell$ is the conductance of surface

$\langle P_\ell^2 \rangle$ is twice the band-limited mean square pressure averaged over the surface

Assume

$$\langle P_\ell^2 \rangle_A \simeq \langle P_k^2 \rangle_{\text{volume}} \cdot 4$$

where $\langle P_k^2 \rangle$ is the space-averaged, band-limited pressure over volume k.

Then

$$W_{\text{abs}} = \frac{2}{\rho C_o} \sum A_\ell \langle P_k^2 \rangle \epsilon_\ell \tag{199}$$

where all surfaces, $\ell$, are adjacent to volume k.

In the high frequency regime where the modal density is great,

$$\epsilon_\ell \simeq \alpha_\ell / 8$$

Substituting

$$W_{\text{abs}} = \frac{1}{4\rho C_o} \sum_\ell \alpha_\ell A_\ell \langle P_k^2 \rangle \tag{200}$$

Hence,

$$C_\alpha (k, k) = \frac{1}{4\rho C_o} \sum_\ell \alpha_\ell A_\ell \tag{201}$$

where $\alpha$ is the band-limited random absorption coefficient of wall $\ell$ and wall $\ell$ bounds cavity k.

## Section 4

## COMPUTER PROGRAM

The computer program VIN implements the modal and statistical energy analysis methods presented in sections 2 and 3 in user-oriented, general purpose form. The two analysis methods are functionally separate techniques. The modal analysis portion of the program can provide both discrete frequency and band average estimates of a vehicle's interior pressure given the external excitation of the vehicle structure. While the technique is theoretically valid over any frequency range, the number of structural and acoustic modes required to obtain acceptable accuracy can become computationally prohibitive as modal densities increase with frequency. Band-averaged, space-averaged estimates of the vehicle interior pressure can be obtained with statistical energy analysis when the modal density becomes sufficient to justify the technique's assumptions. The program is structured to allow an easy transition between the methods during a single computer run with the geometry definition methodology as the "common connecting ground."

The vehicle structure can be represented by any number of "elements" with known user-supplied, in vacuo response characteristics. The user may describe each element's response characteristics in the coordinate system and orientation best suited for that particular structure. The acoustic modal response characteristics of the vehicle's interior space can be calculated by the program from user-supplied hardwall acoustic response characteristics of smaller, simpler cavity shapes that approximate the vehicle's interior space. The method utilized, acoustic component mode synthesis, is described in mathematical detail in section 2. When the acoustic modal density is sufficient to justify the SEA assumptions, detailed acoustic response characteristics are no longer required and reverberant acoustics are assumed. The user must also define the external acoustic field on the vehicle and make various program option selections.

In section 4, the organization and structure of VIN is documented. The nuts and bolts of the program's use is described in section 6, "Computer User's Manual."

## 4.1 General Overview

The key routines of the program VIN are outlined below. The routines are first called during execution of the program in the order in which they appear in the outline. The program is segmented so that only those routines needed for each particular stage of the problem solution are held in core memory. The core data storage requirements are a function of the specific problem size and the options selected by the user. The program code is in ASCII Fortran (LEVEL 10R1). A random access mass storage device and line printer are the only required periferials.

**VIN**

PART I. Program Initiation and Control

1. MAIN
2. DATALD

PART II. Modal Analysis

1. FRQCAL
2. BNDCAL
3. MULPRM
4. MULCV
5. PRMCAL
   a. GERMAS
   b. LNMCAL
   c. ZANCAL
   d. RJACAL
   e. MODES

6. MDLPRM
7. CALC
8. DFCALC
9. REVERB

PART III. Statistical Energy Analysis

1. HFREQ
   a. CBJAL

    b. CJA
    c. WMAT
    d. CMAT
2. SEAPRM
3. SEARES

## PART I. Program Initialization and Control

### 1. MAIN

MAIN sets up the required mass storage files and dynamically allocates array storage based on the current problem size given by the input data. The routine also controls the flow of the program calculations. It resides in core memory throughout the execution of the program.

Since the program dynamically allocates the array storage based on input data, core storage is always efficiently used regardless of the problem size. Dimension statements do not limit the problem size or complexity in any way.

### 2. DATALD

DATALD reads all the required input data from a specified data file, data cards, or mass storage files. The input is fully mirrored to a user-selected output device. Some diagnostics are provided to flag gross input errors. The coordinate transfrmation matrices, which fix the location of the structural and acoustic elements in global space, are calculated. Any new finite element data to be used to defined an element's response characteristics is loaded and converted into two-dimensional fourier series form in DATALD.

The input data establishes which program calculation and/or data manipulation options are desired. The input also defines the structural and acoustic geometry and response characteristics along with the external pressure field excitation.

## PART II. Modal Analysis

### 1. FRQCAL

FRQCAL is a group of routines that calculate the natural frequencies of the volume, opening, and surface elements that are included in the program's library of modal elements.

### 2. BNDCAL

BNDCAL calculates the modal summation bandwidths, BANDWN and BANDWM, as described in section 2.2.5. These bandwidths are used to limit program calculations at each band of interest to only those structural and acoustic modes of significant importance to the overall results in that band.

### 3. MULPRM

MULPRM calculates the parameters required for the acoustic component mode synthesis that is carried out in MULCV.

### 4. MULCV

MULCV calculates the modal response characteristics of acoustic spaces of complex shape from the known response characteristics of simplier shapes combined to approximate the complex shape. The acoustic component mode synthesis performed in MULVC is fully described in section 2.2.1.

### 5. PRMCAL

PRMCAL is actually a group of routines that either calculate or direct the calculation of the parameters needed for modal analysis of a complex cavity shape with multiple structural walls. These routines are

a. GENMAS. GENMAS calculates the generalized acoustic mass of a cavity whose modes were obtained through component mode synthesis.

b. LNMCAL. LNMCAL calculates the structural/acoustic coupling coefficients, LNM for those structural and acoustic modal combinations that are important to the problem solution.

c. ZANCAL. ZANCAL calculates the cavity acoustic damping from the cavity modal response and each wall's normal absorption coefficient.

d. RJACAL. RJACAL calculates the joint acceptance of a given external excitation field with the modes of the structure for each frequency band in which the structural mode has a significant response.

e. MODES. Modes is a group of routines, accessed by PRMCAL, that provides acoustic, opening, and structural mode shape information. The information is organized in the form of a program library of modal elements. This program code held library provides both geometric and modal response descriptions. MODES also contains routines for the numeric and/or analytical surface integrations required to calculate the modal analysis parameters.

## 6. MDLPRM

MDLPRM outputs to paper the program calculated parameters used in the modal analysis portion of the program.

## 7. CALC

CALC calculates the interior pressure of the cavity in two forms: space-averaged, band-averaged pressure squared (SABAP) over each subvolume of the cavity and the SABAP over the entire multiple cavity system. The external excitation can be random or deterministic but must be described in the frequency domain.

## 8. DFCALC

DFCALC calculates the interior space-averaged pressure at discrete frequencies. The external excitation can be random or deterministic but must be described in the frequency domain.

## 9. REVERB

REVERB estimates the reverberation time of complex shaped cavities with arbitrary surface absorption characteristics. The fundamental parameters used in the estimation are calculated in PRMCAL.

## PART III. Statistical Energy Analysis

### 1. HFREQ

HFREQ calculates the space-averaged, band-averaged pressure squared over each subvolume of an arbitrarily shaped cavity. The external excitation must be random. A brief description of the technique and the assumptions implicit in its use are given in section 6.3. A collection of routines is needed to assemble the SEA band-averaged power balance equations. The equations are solved for each band of interest.

a. CBJAL. CBJAL calculates the band-averaged joint acceptance for the modes resonant below the band of interest for each surface exposed to external excitation..

b. CJA. CJA calculates the band-averaged joint acceptance of the modes resonant in the band of interest for each surface exposed to the external excitation.

c. WMAT. WMAT prepares the input power matrix for the power balance equations.

d. CMAT. CMAT is a group of routines that prepares the matrix representing the power dissipation mechanisms of the SEA system. This includes power transferred between subvolumes of the cavity, power absorbed by the cavity walls, and power transferred out of the system through the walls of the cavity.

### 2. SEAPRM

SEAPRM outputs to paper the program calculated parameters used in the SEA portion of the program.

### 3. SEARES

SEARES outputs the results of the SEA portion of the program calculations.

## 4.2 **Flowchart**

The program MAIN, which directs the flow of VIN's computations, is charted in this section. In section 6, detailed information is provided about the routines that the user may desire to access and update (structural and acoustic geometry definitions, response definitions, and surface integrations). The remainder of the routines should be considered black boxes--not to be tampered with. Nevertheless, the program code is commented throughout for basic documentation purposes.

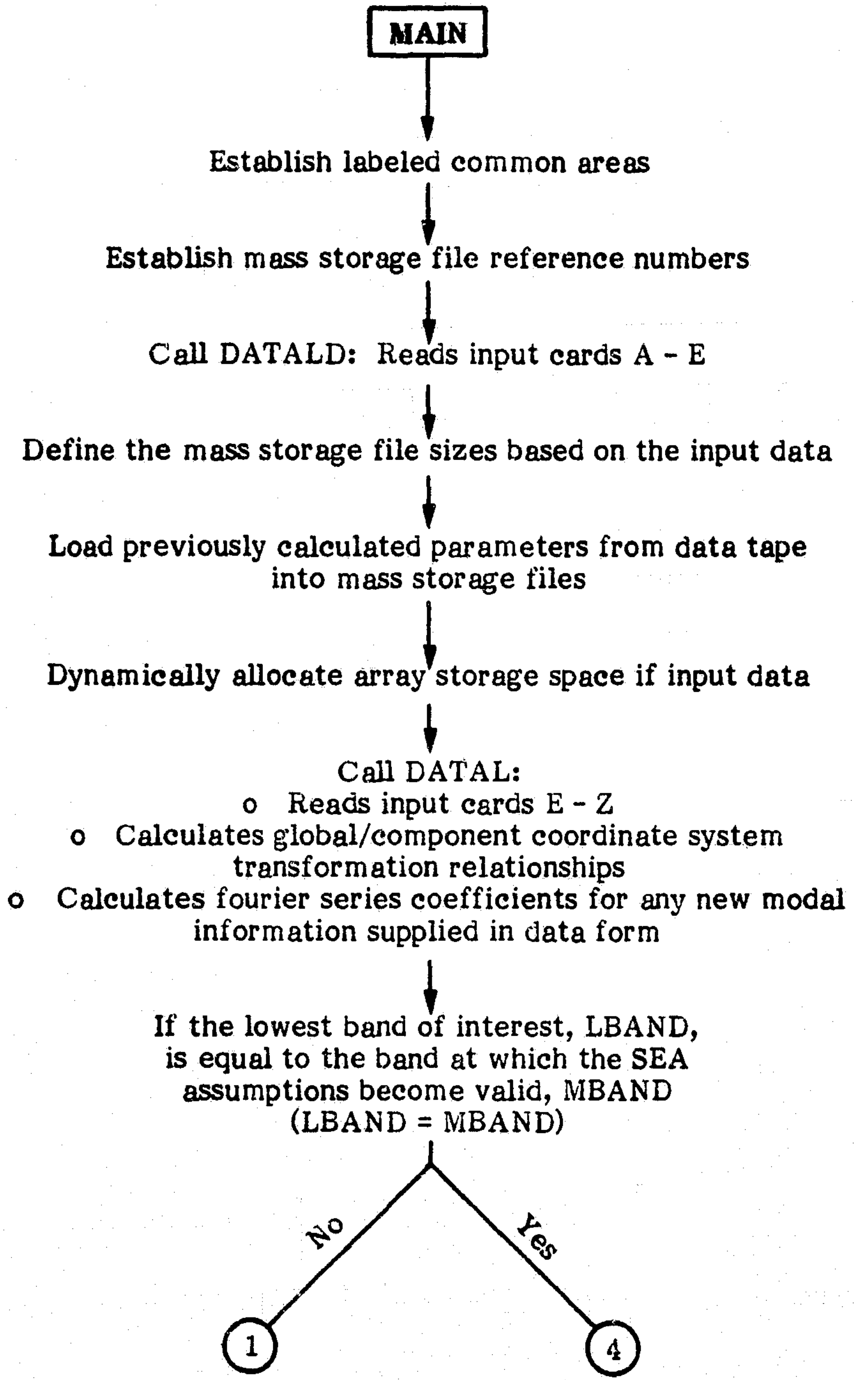
MAIN
Establish labeled common areas
Establish mass storage file reference numbers
Call DATALD: Reads input cards A - E
Define the mass storage file sizes based on the input data
Load previously calculated parameters from data tape into mass storage files
Dynamically allocate array storage space if input data
Call DATAL:
o Reads input cards E - Z
o Calculates global/component coordinate system transformation relationships
o Calculates fourier series coefficients for any new modal information supplied in data form
If the lowest band of interest, LBAND, is equal to the band at which the SEA assumptions become valid, MBAND (LBAND = MBAND)
No
Yes
1
4

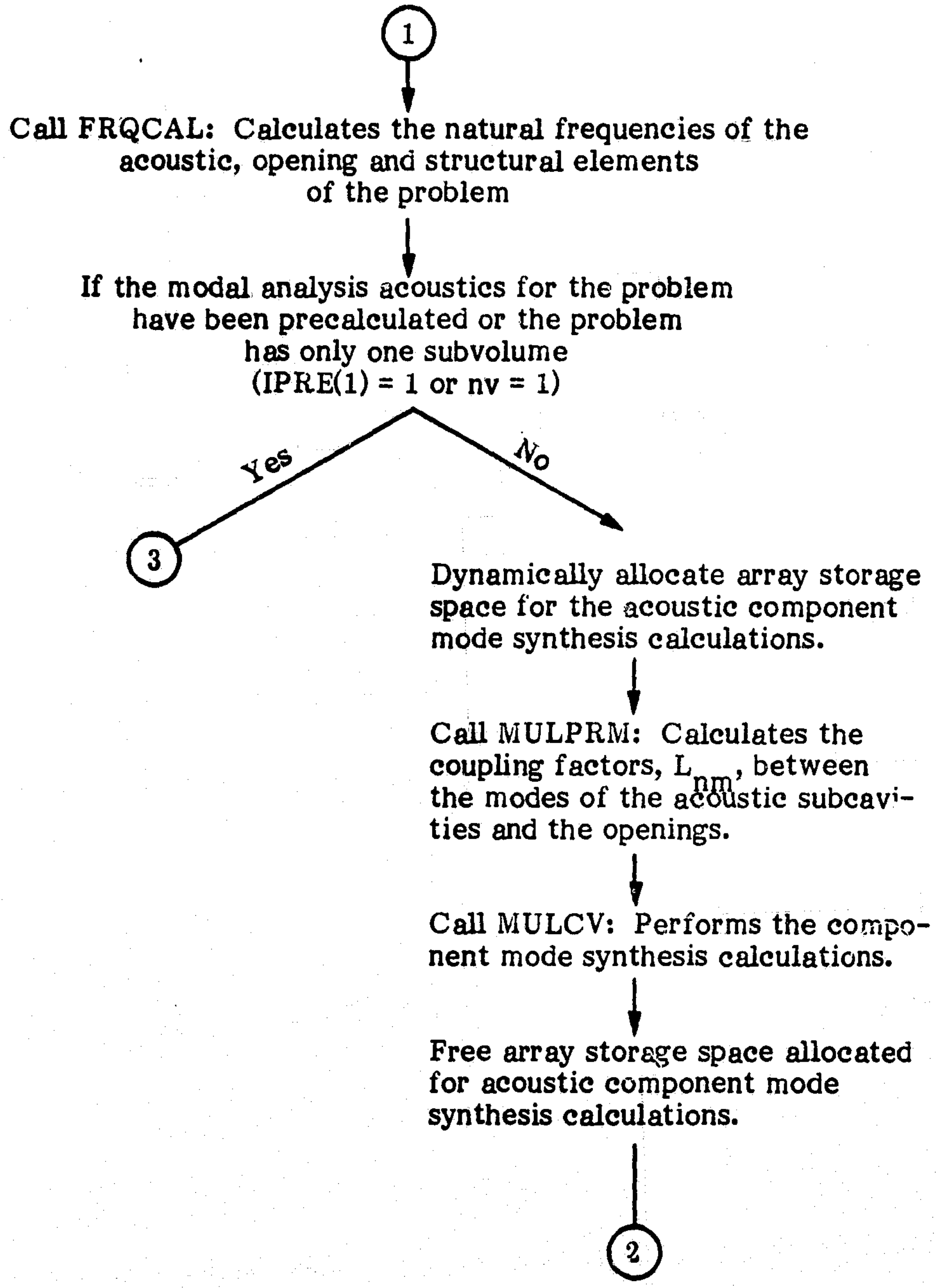

Call FRQCAL: Calculates the natural frequencies of the acoustic, opening and structural elements of the problem

If the modal analysis acoustics for the problem have been precalculated or the problem has only one subvolume (IPRE(1) = 1 or nv = 1)

Dynamically allocate array storage space for the acoustic component mode synthesis calculations.

Call MULPRM: Calculates the coupling factors, $L_{nm}$, between the modes of the acoustic subcavities and the openings.

Call MULCV: Performs the component mode synthesis calculations.

Free array storage space allocated for acoustic component mode synthesis calculations.

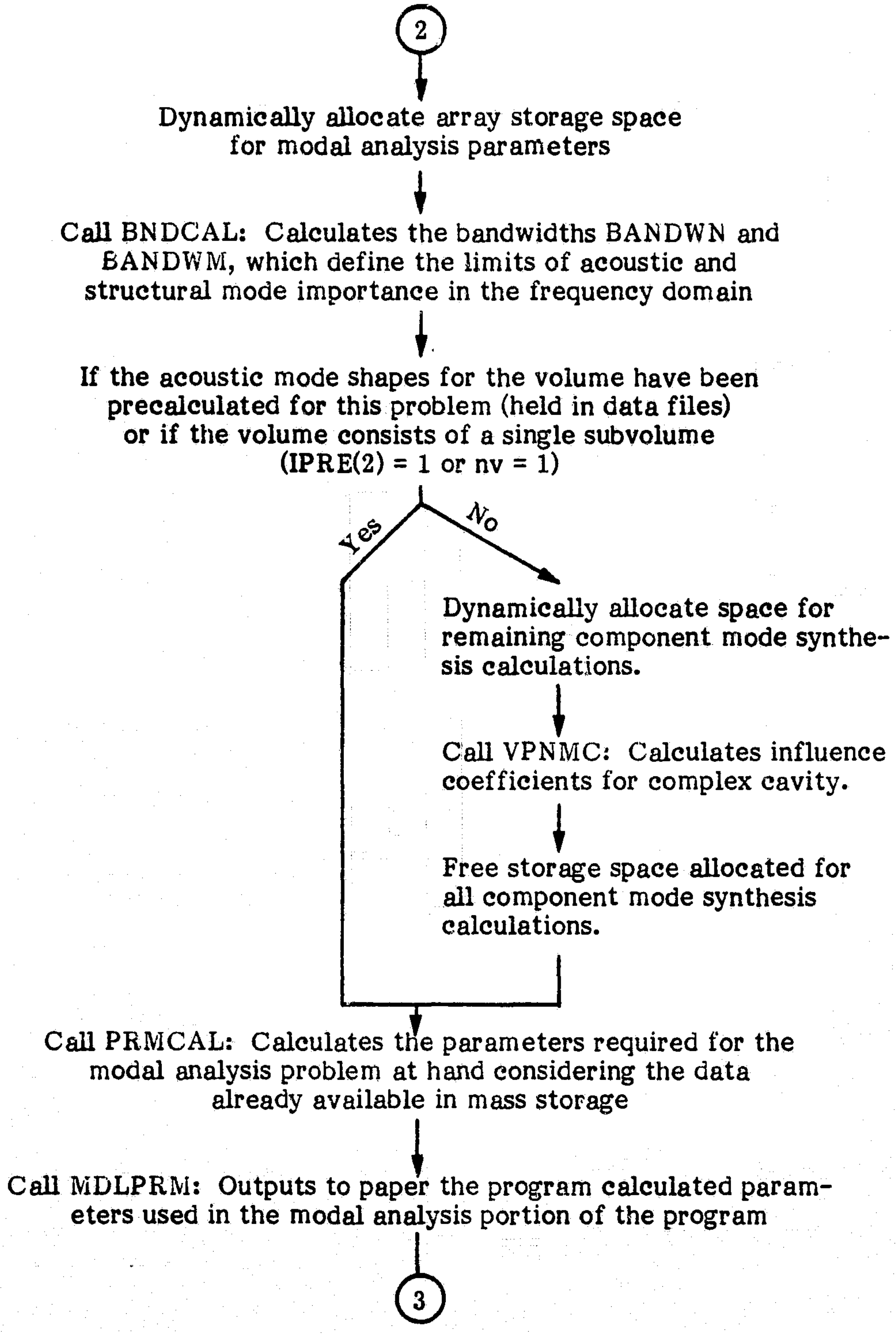

Dynamically allocate array storage space for modal analysis parameters

Call BNDCAL: Calculates the bandwidths BANDWN and BANDWM, which define the limits of acoustic and structural mode importance in the frequency domain

If the acoustic mode shapes for the volume have been precalculated for this problem (held in data files) or if the volume consists of a single subvolume (IPRE(2) = 1 or nv = 1)

Dynamically allocate space for remaining component mode synthesis calculations.

Call VPNMC: Calculates influence coefficients for complex cavity.

Free storage space allocated for all component mode synthesis calculations.

Call PRMCAL: Calculates the parameters required for the modal analysis problem at hand considering the data already available in mass storage

Call MDLPRM: Outputs to paper the program calculated parameters used in the modal analysis portion of the program

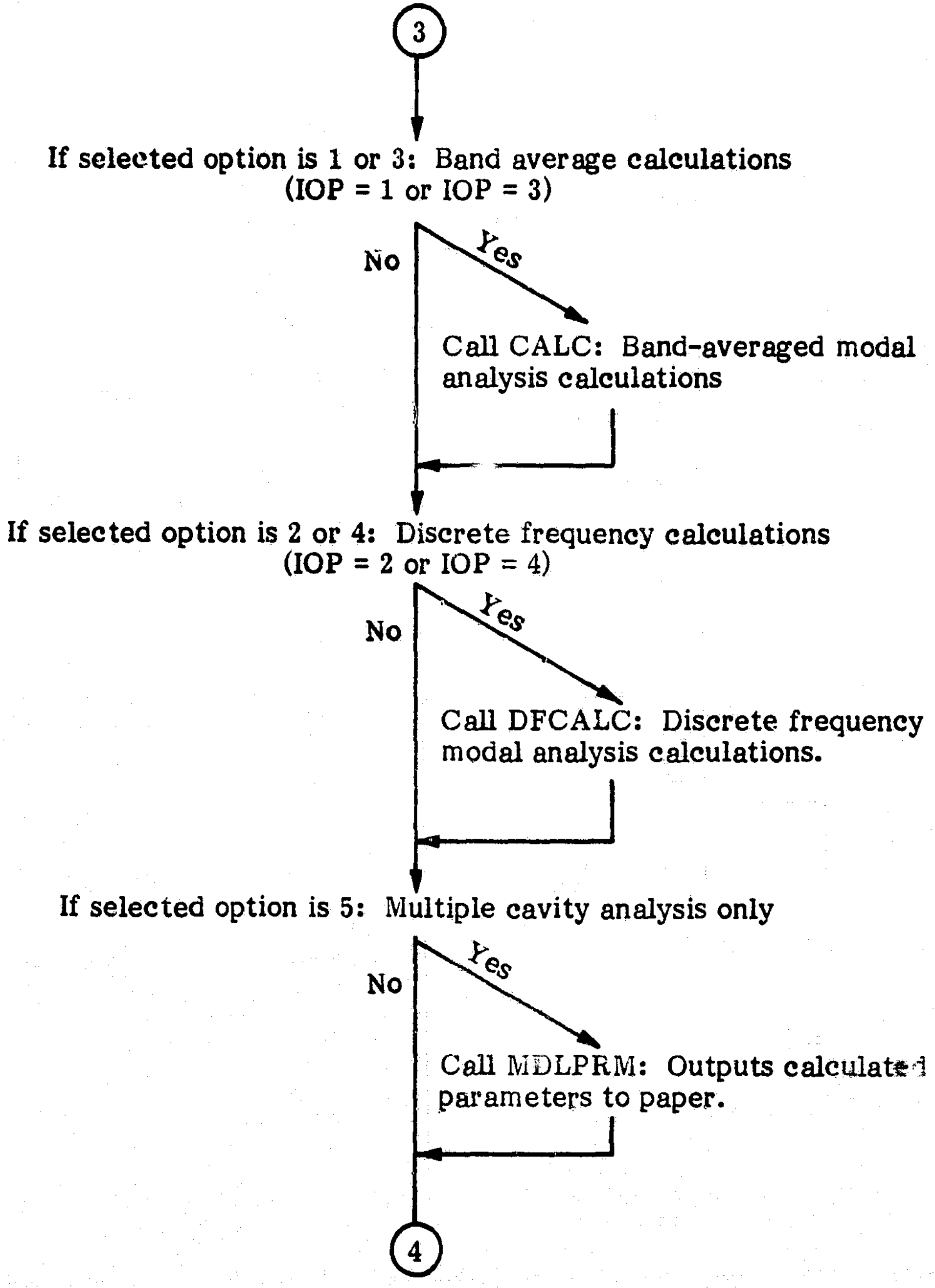
3
If selected option is 1 or 3: Band average calculations
(IOP = 1 or IOP = 3)
No
Yes
Call CALC: Band-averaged modal analysis calculations
If selected option is 2 or 4: Discrete frequency calculations
(IOP = 2 or IOP = 4)
No
Yes
Call DFCALC: Discrete frequency modal analysis calculations.
If selected option is 5: Multiple cavity analysis only
No
Yes
Call MDLPRM: Outputs calculated parameters to paper.
4

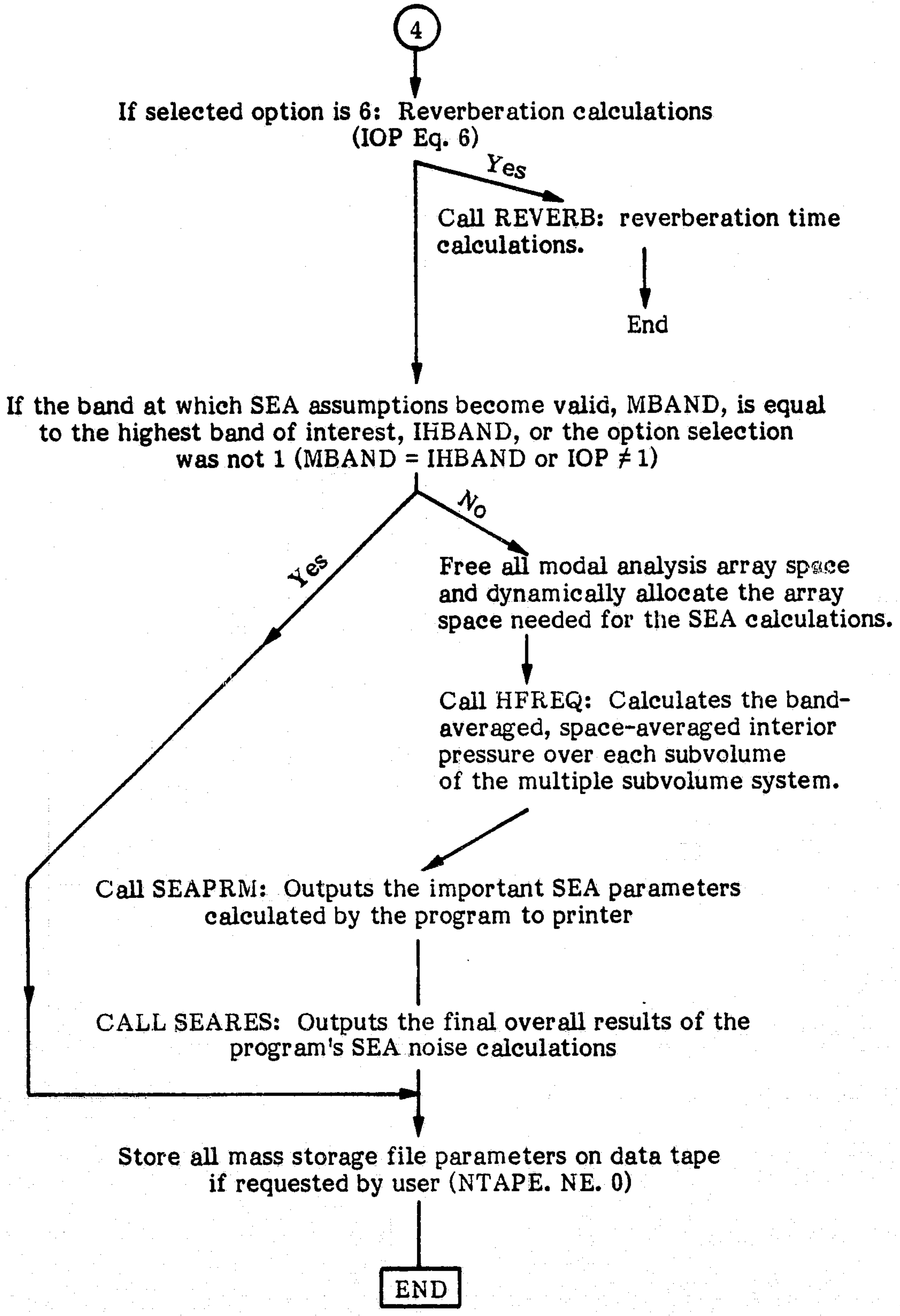

If selected option is 6: Reverberation calculations (IOP Eq. 6)

Call REVERB: reverberation time calculations.

If the band at which SEA assumptions become valid, MBAND, is equal to the highest band of interest, IHBAND, or the option selection was not 1 (MBAND = IHBAND or IOP ≠ 1)

Free all modal analysis array space and dynamically allocate the array space needed for the SEA calculations.

Call HFREQ: Calculates the band-averaged, space-averaged interior pressure over each subvolume of the multiple subvolume system.

Call SEAPRM: Outputs the important SEA parameters calculated by the program to printer

CALL SEARES: Outputs the final overall results of the program's SEA noise calculations

Store all mass storage file parameters on data tape if requested by user (NTAPE. NE. 0)

ORIGINAL PAGE IS OF POOR QUALITY

## Section 5

## COMPUTER PROGRAM VERIFICATION

The modal and SEA analytical models, as implemented in the computer program VIN, were verified by the following series of test cases:

1. Acoustic component mode synthesis
2. Modal analysis parameter calculations
3. Modal analysis noise predictions
4. Statistical energy analysis noise predictions

The results of each step are discussed in turn. The application of the program to the very complex Space Shuttle payload bay problem is given in section 7 with comparisons to both on ground experiment and flight data. As will be further discussed later, the complexity of the Space Shuttle structure and flight environments make it a poor test case for the evaluation of basic analytical and computer methodology. The input data for each test case is given in appendix E.

### 5.1 Verification of Acoustic Component Mode Synthesis

The modes and mode shapes of a rectangular cavity with a partial partition were calculated to exercise the component mode synthesis capability of the program. The results were compared with experiment as recorded in the literature.(11) The cavity is illustrated in figure 2. The error in acoustic modal frequency over the first dozen

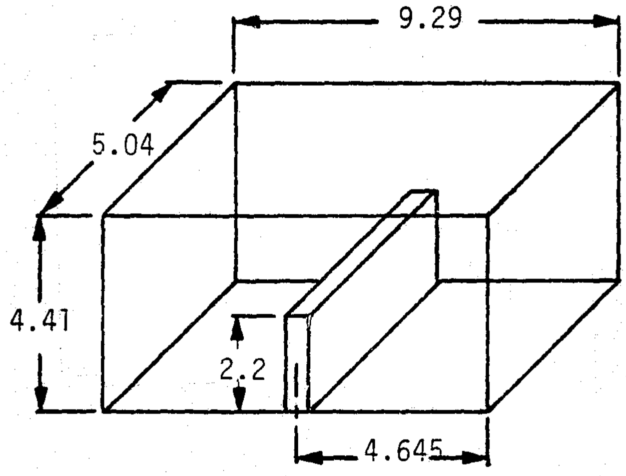

FIGURE 2. Acoustic Component Mode Synthesis Two-Cavity Test Case

modes is given in table 1 as a function of various modal retention parameters. Analysis of mode shape accuracy is germane in this model only in the context of surface integrations. Component mode synthesis determined mode shapes are discussed in this regard in the next section.

To exercise the program's ability to handle more than two subvolumes, the cavity was divided into three subcavities, as illustrated in figure 3. The results, given in table 2, complete the verification of the calculation methodology and computer implementation of the acoustic component mode synthesis.

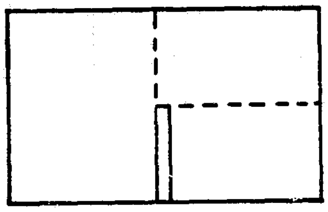

FIGURE 3. Acoustic Component Mode Synthesis
Three-Cavity Test Case

### 5.2 **Verification of Modal Analysis Parameter Calculations**

Each modal analysis computational option uses the same baisc parameters to describe the system. These parameters are calculated in the routines GENMAS, LNMCAL, ZANCAL, RJACAL, QMWBCL, (see section 4.1 under PRMCAL). The calculation of GENMAS (the generalized acoustic mass of the multiple cavity system), LNMCAL (the structural/acoustical coupling coefficient), and ZANCAL (the acoustic damping of the cavity) each involve, among other factors, a surface integration and the results of the acoustic component mode synthesis. Given a correct integration technique, the accuracy of each is a function of the component mode synthesis approximation of the acoustic multiple cavity mode shape:

$$F_n(x_o) = \sum_{n'} \frac{P^v_{n'}(\omega_n)\, F^v_{n'}(x_o)}{M^{a^v}_{n'}}$$

## TABLE 1. COMPONENT MODE SYNTHESIS: TWO CAVITY RESULTS

| Mode | VIN-A (Hz) | VIN-B (Hz) | Finite Element Analysis (4 elements) (Hz) | Measured Frequency (Hz) |
|---|---|---|---|---|
| 1, 0, 0 | 668 | 672 | 635 | 570 |
| 0, 1, 0 | 1330 | 1330 | 1377 | 1330 |
| 1, 1, 0 | 1443 | 1442 | 1365 | 1448 |
| 2, 0, 0 | 1494 | 1474 | 1625 | 1470 |
| 0, 0, 1 | 1522 | 1536 | 1550 | 1534 |
| 1, 0, 1 | 1571 | 1551 | 1615 | 1555 |
| 3, 0, 0 | 1909 | 1869 | 2080 | 1840 |
| 2, 1, 0 | 1970 | 1963 | 2100 | 1980 |
| 0, 1, 1 | 2018 | 2089 | 1942 | 2036 |
| 2, 0, 1 | 2059 | 2293 | 2242 | 2120 |
| 2, 1, 1 | 2095 | 2436 | 2910 | 2500 |
| Average Error (%) | 1.96 | 2.4 | 4.5 | |

*VIN calculation with 5 opening modes retained.

**VIN calculation with 10 opening modes retained.

## TABLE 2. COMPONENT MODE SYNTHESIS: THREE-CAVITY RESULTS

| Mode | VIN-A (Hz) | VIN-B (Hz) | Finite Element Analysis (5 elements) (Hz) | Measured Frequency (Hz) |
|---|---|---|---|---|
| 1, 0, 0 | 587 | 569 | 591 | 570 |
| 0, 1, 0 | 1296 | 1296 | 1346 | 1330 |
| 1, 1, 0 | 1453 | 1452 | 1470 | 1448 |
| 2, 0, 0 | 1474 | 1474 | 1630 | 1470 |
| 0, 0, 1 | 1518 | 1570 | 1550 | 1534 |
| 1, 0, 1 | 1572 | 1646 | 1597 | 1555 |
| 3, 0, 0 | 1862 | 1884 | 2043 | 1840 |
| 2, 1, 0 | 1929 | 1926 | 2116 | 1980 |
| 0, 1, 1 | 1987 | 1985 | 2041 | 2036 |
| 2, 0, 1 | 2017 | 2018 | 2255 | 2120 |
| Average Error (%) | 1.96 | 2.4 | 4.5 | |

*VIN calculation with 5 opening modes retained.

**VIN calculation with 10 opening modes retained.

where $F^{v}_{n'}(x_o)$ is the hard wall acoustic mode shape of the subcavity, v.

$M^{a^v}_{n'}$ is the generalized mass of the subcavity v for the mode n'.

$P^{v}_{v'}(\omega_n)$ is the multiple factor of constraint that relates subcavity mode shapes to the multiple cavity mode shape at the natural frequency, $\omega_n$.

The accuracy of the component mode synthesis for a given problem is solely a function of the number of opening and acoustic modes retained in the analysis. The higher the natural frequency of the multiple cavity, the more modes, of both opening and subvolume, are required. A banding technique is used to reduce the modal retention requirements. The acoustic modes nearest the natural frequency being calculated are retained. The opening modes that couple well with the subvolume acoustic modes being used are also selected. Since other factors, such as the complexity of the multiple cavity system, the number of openings, the shape of the openings, also have an impact on the number of modes required for a given accuracy, important problems should be repeated with increasing modal retention (opening and acoustic modes) until the solution is shown to converge.

The mode shape accuracy is integrally connected with and directly related to the accuracy of the natural frequency calculations as presented in the previous sections. $P^{v}_{n}$ is derived directly from the matrix that determines the natural frequency.

RJACAL requires integrations of the structural mode shape and the external pressure field over a surface. The program uses both analytic expressions and Gaussian quadrature for the integrations. The two types of calculations were checked against each other. The integration precision is easily within the accuracy of the analytic descriptions of the external pressure fields and of the structure's mode shapes.

### 5.3 Verification of Modal Analysis Noise Predictions

The previous section demonstrated that the acoustics of a cavity of complex shape can be estimated with component mode synthesis. This section shows that the modal analysis equations and methodology as implemented in VIN provides adequate noise predictions given correct structural and acoustic response data. In this regard, simple test cases with little lattitude for input data inaccuracies provide the clearest verification. Since the accuracy of the component mode synthesis calculations were tested, as reported in section 5.2, the remainder of the modal analysis calculations can be verified with a single cavity test case.

### 5.3.1 Modal Analysis With Random Excitation

An experiment with fairly well-defined structural and acoustic characteristics was selected from the literature.(12) The test configuration is shown in figure 4. The one-third octave band results are compared with the predicted levels in figure 5. The program's discrete frequency calculation results are given in figure 6.

### 5.3.2 Modal Analysis With Deterministic Excitation

The only difference between the random and deterministic options is in the calculation of the generalized force over the transmission surfaces of the enclosure. All other portions of the calculations are shared. Since the accuracy of the generalized force calculations was tested in section 5.2, the test cases for random excitation also verify the modal analysis options with deterministic excitation (see section 5.3.1).

## 5.4 Verification of SEA Noise Predictions

Because of its very nature, statistical energy analysis can only be used given some form of random excitation. As previously presented in detail, the SEA model implemented in VIN is a modified form of the PACES model(4) and provides space-averaged noise estimates for each of several interconnected cavities.

All but one aspect of the SEA power balance equations can be tested with a simple single-cavity test case. The excluded aspect is the power flow that occurs through the openings between cavities in multiple cavity cases.

A simple single-cavity experiment was chosen from the literature to exercise the bulk of the SEA computations. In this experiment(13) a common 55-gallon oil drum was hung in a reverberation room. One-third-octave band noise reduction was measured over the range of 125 to 12,500 Hz. A comparison of SEA calculations to experimental results is shown in figure 7. The results are well within the usual accuracy of SEA estimates.

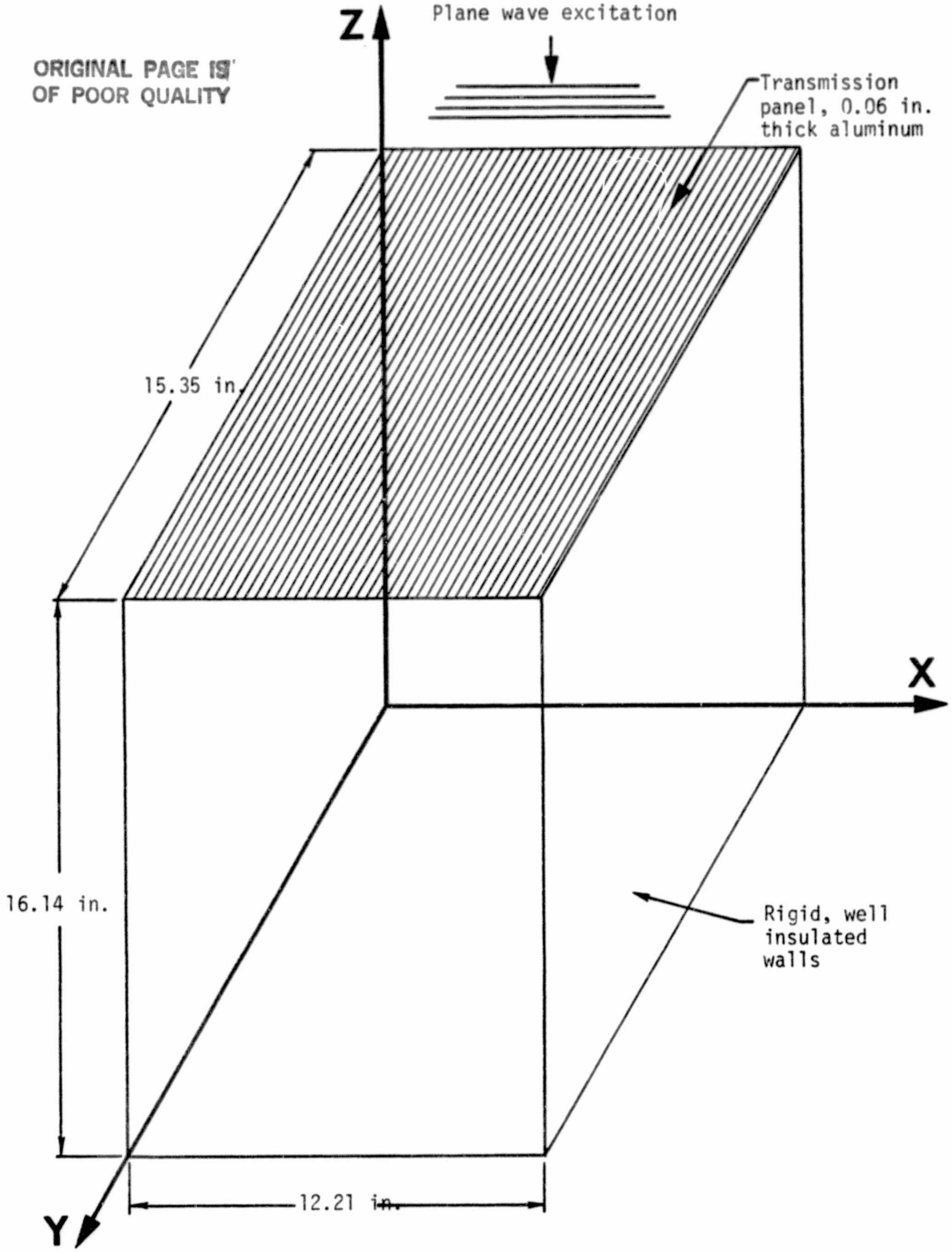

Figure 4. Modal Analysis Test Case Configuration

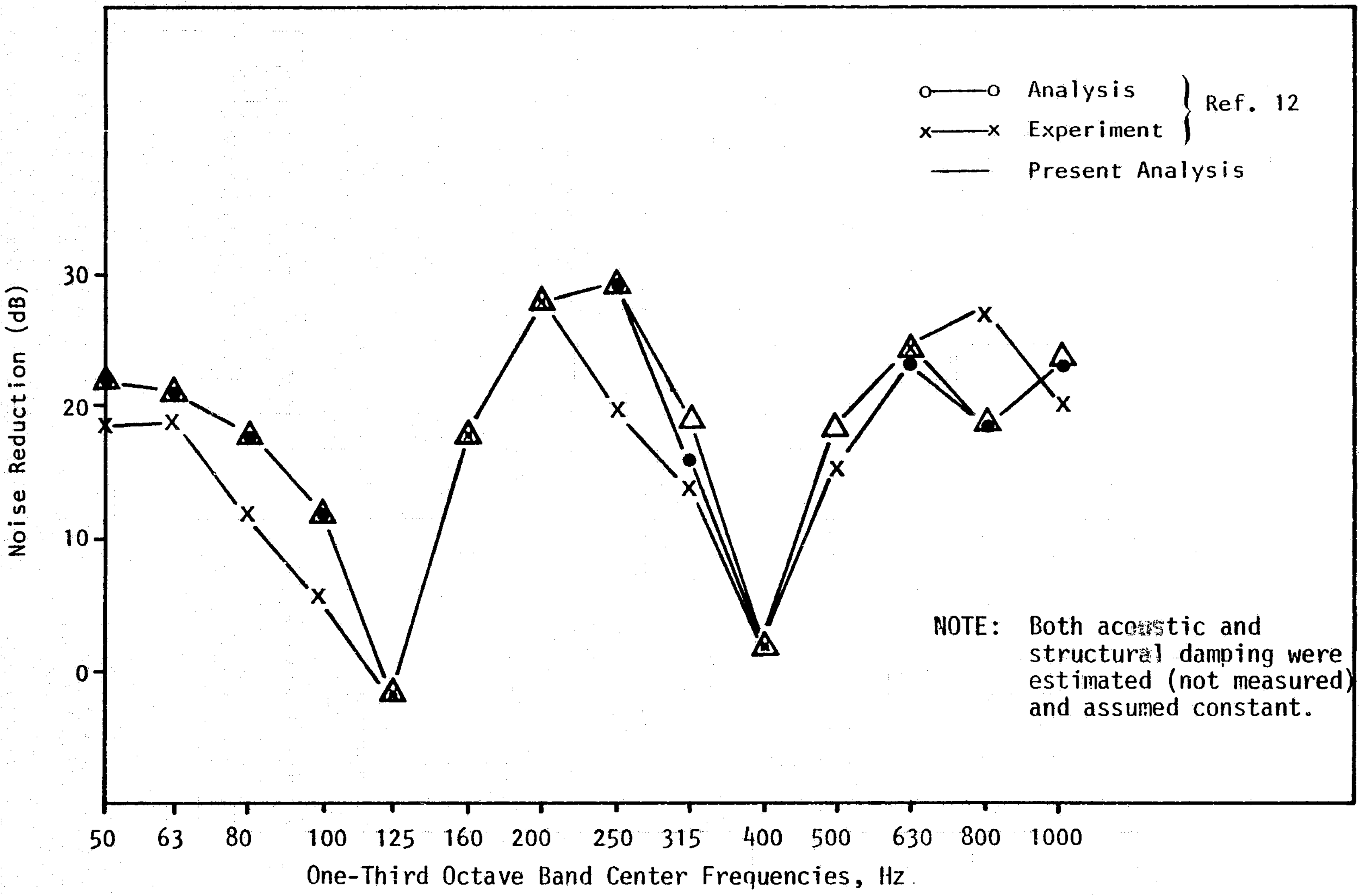

Figure 5. Modal Analysis Test Case Results, Band Average

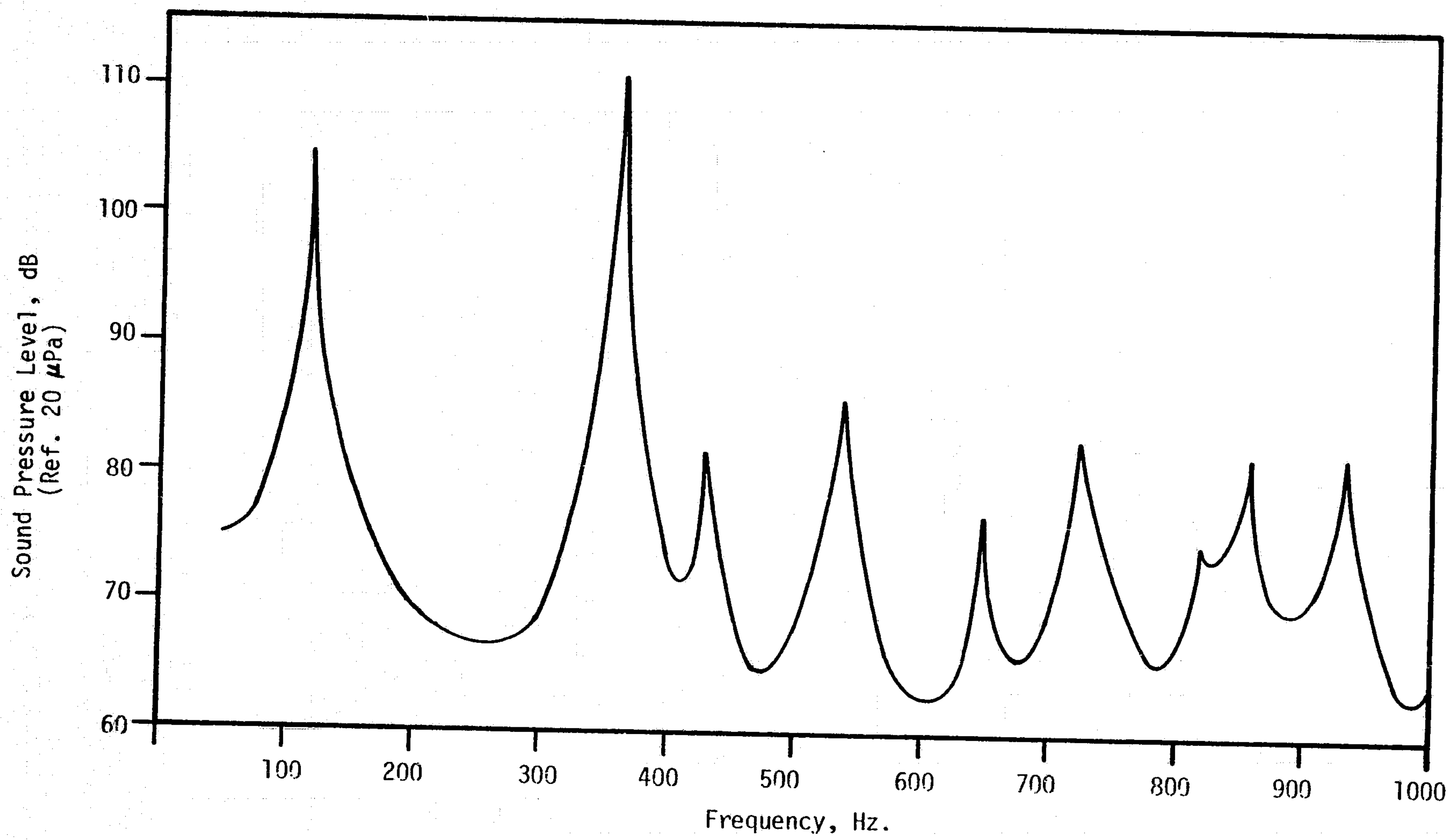

Figure 6. Modal Analysis Test Case Results, Discrete Frequency

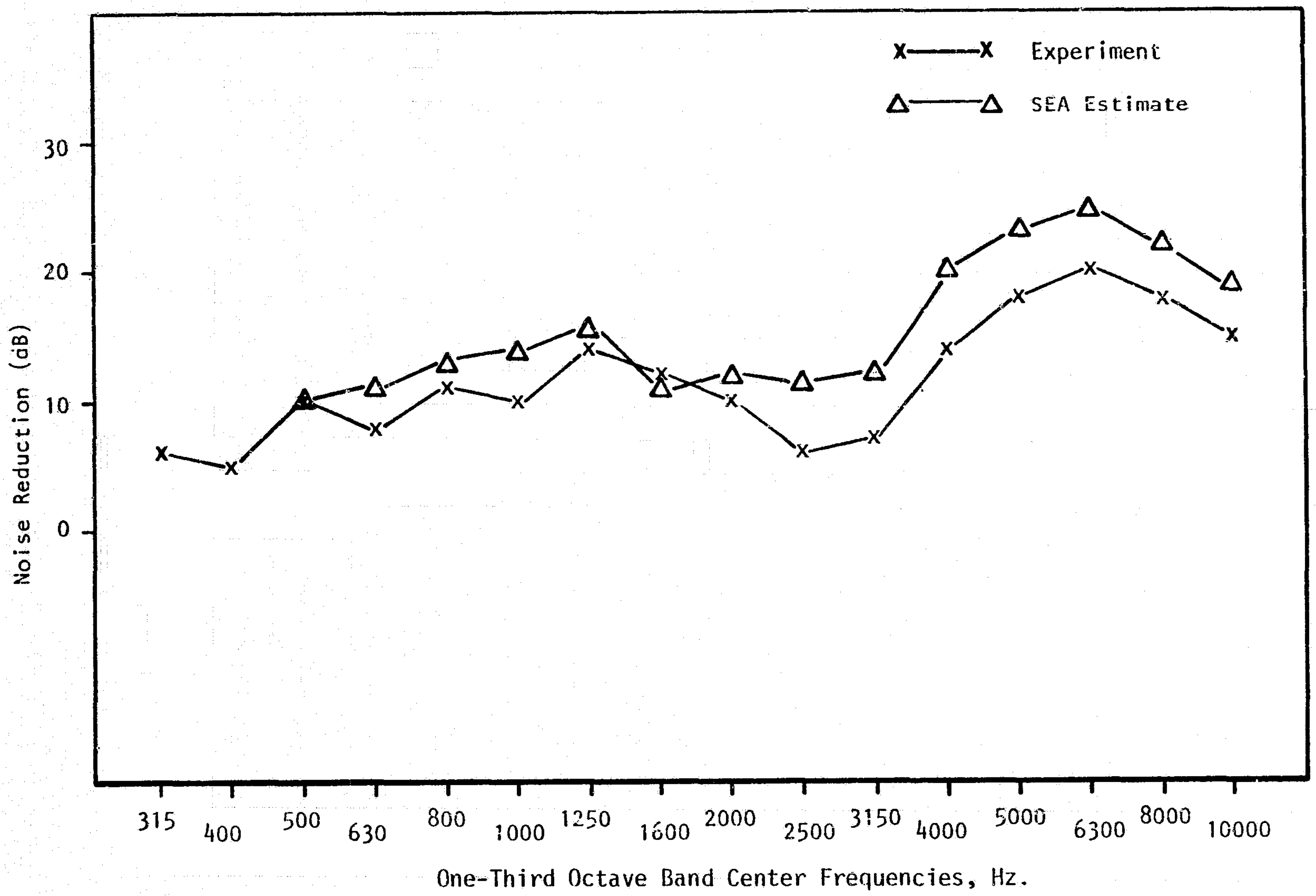

Figure 7. SEA Test Case Results

While the multiple cavity capability may seem much more complex than the single cavity case, only one addition factor is added: the power flow through openings between cavities. Estimates of each opening's resistance to power flow are made in a very rough manner. Regardless of the opening's actual geometry, the conductance is estimated to be that of a baffled plane piston with the area of the opening. The estimate is "order of magnitude" at best. The larger the characteristic opening dimension to acoustic wavelength ratio (in the frequency band of interest), the better the estimate. If the openings are small enough to provide significant resistance to the flow of acoustic power, the validity of the multiple cavity interior noise estimates must be considered extremely suspect. The user can evaluate the significance of the resistance by doubling the area of the openings and recalculating the band-averaged pressure in each cavity. Large changes in the results will indicate significant resistance to power flow by the openings.

The intercavity conductance estimates must control only the pressure differential between the subvolumes, not the overall multiple cavity average level. Cavity absoprtion, the location and characteristics of transmission surfaces, and the external pressure field descriptions are factors that must dominate the overall multiple cavity results as they do the single cavity results. Unfortunately, an adequate multiple cavity test case could not be found in the literature for use in the evaluation of the intercavity pressure differential estimation capabilities of the model. The few experiments with multiple cavity measurements involved too many unknown variables for conclusive model verification. Given the frequency range of interest and the "opening significance" restriction above, however, the assumption that the relative opening areas between the subvolumes control the differential pressure can be considered strong in relation to other model assumptions.

C-2

## Section 6

## VIN USER'S MANUAL

This program will aid in the analysis of Vehicle Interior Noise (VIN) problems. Both modal and statistical energy analysis techniques are available to the user in a very generalized form. An overview of the steps required to use the program is given below. Each item will be fully described in turn.

### VIN USER'S PROCEDURE

1. Review modal analysis method used in VIN.
2. Review statistical energy analysis method used in VIN
3. Graphically define geometry of the problem
4. Partition the volume into subvolumes and define openings
5. Idealize the structure for modeling
6. Number surface and volume elements and assign nodes
7. Update program library of elements
8. Estimate the structural damping and acoustic absorption
9. Define the external excitation on each surface and update program library of correlation fields
10. Prepare input data file
11. Prepare executive commands
12. Run program

### 6.1 Review Modal Analysis Method Used in VIN

The vehicle interior noise problem can be modeled by a set of coupled differential equations, one describing the structural response of the vehicle walls to excitation and the other representing the vehicle interior acoustics.(2) The structure is modeled by standard linear Lagrangian relationships with differential pressure across the structural walls as the driving force (point force input is also allowed). The acoustic model is based on Green's theorem in conjunction with small perturbation acoustical relationships. Using normal mode mathematical techniques, the set of equations are

**Acoustics**

$$\frac{\partial^2 P_n(t)}{\partial t^2} + \frac{A\rho C_o^2}{V} \sum_r \frac{C_{nr}}{M_r^a} \frac{\partial P_r(t)}{\partial t}$$

$$+ \omega_n^{a\,2} (P_n(t) = \frac{-A}{V} \sum_m L_{nm} \frac{\partial^2 q_m(t)}{\partial t^2}$$

**Structure**

$$M_m \left( \frac{\partial^2 q_m(t)}{\partial t^2} + \frac{C}{M} \frac{\partial q_m(t)}{t} \right.$$

$$\left. + \omega_m^2 q_m(t) \right) = \rho c^2 A \sum_n \frac{P_n(t) L_{nm}}{M_n^a} + Q_m^e(t)$$

These equations can be solved in the time domain or fourier transformed and solved in the frequency domain for $P_n(t)$ or $P_n(\omega)$ respectively,

where

$A$ = Surface area of vehicle structure

$C$ = Structural viscous damping factor

$c$ = Speed of sound in air

$C_{nr}$ = $\int_A \int 1/Z_a \, F_n^2(x_o) dA$

$F_n(x_o)$ = Acoustic hard wall mode shape

$L_{nm}$ = $\int_A \int \psi_m(x_o \, F_n(x_o) dA$ - structural/acoustic modal coupling factor

$M_r^a$ = Generalized acoustic mass of vehicle interior

$M_m$ = Generalized mass of vehicle structure

$p^e(x_o, t)$ = External blocked pressure

$P_n(t)$ = $n^{th}$ mode generalized pressure inside vehicle cavity at time, t

$q_m(t)$ = $m^{th}$ mode generalized displacement of vehicle structure

$Q_m^e(t)$ = $\int_A p^e(x_o, t)\, \psi_m(x_o) dA$ - generalized external force on structure

$V$ = Volume of vehicle cavity

$Z_a$ = Normal acoustic absorption coefficient for surface

$\rho$ = Density of air

$\psi_m(x_o)$ = Structural in vacuo mode shape

$\omega_m$ = Structural in vacuo natural frequency

With $P_n(\omega)$, the vehicle interior noise level can be calculated in any of the following forms:

Discrete frequency pressure squared at a point of specific interest

$$p^2(x_o, \omega) = \frac{\rho^2 c^4}{2} \sum_n \sum_{n'} \frac{F_n(x_o)\, F_{n'}(x_o)}{M_n^a\, M_{n'}^a} P_n(\omega)\, P^*_{n'}(\omega)$$

Band-limited pressure squared at a point of specific interest:

$$\left\langle p^2(x_o, \omega) \right\rangle_\omega = \frac{\rho^2 c^4}{2} \sum_n \sum_{n'} \frac{F_n(x_o)\, F_{n'}(x_o)}{M_n^a\, M_{n'}^a} \int_{\omega_1}^{\omega_2} P_n(\omega)\, P^*_{n'}(\omega) d\omega$$

Band-limited, space-averaged pressure squared:

$$\left\langle p^2(x_o, \omega) \right\rangle_{\omega,\, x_o} = \frac{\rho^2 c^4}{2} \sum_n \frac{1}{M_n^a} \int_{\omega_1}^{\omega_2} P_n(\omega)\, P^*_n(\omega) d\omega$$

Random external pressure fields are handled by taking the expected value of the above equations. Because of difficulties in obtaining the expected value of $P_n(\omega)\, P^*_{n'}(\omega)$, VIN will calculate only the band-averaged, space-averaged pressure when given a random external excitation.

Careful examination of these fundamental equations will show that the user must supply four types of information:

1. Vehicle geometry
2. Structural in vacuo response characteristics
3. Acoustic hard wall response characteristics and surface absorption
4. External excitation on vehicle structure

Often the geometry of the vehicle is so complex that the internal acoustic response characteristics are not known. VIN has a powerful acoustic component mode synthesis capability that calculates the acoustic response characteristics of a complex cavity shape from the known modal response of several simple shapes arranged to approximate that complex shape.

Calculation techniques based on two-dimensional fourier transforms were implemented in VIN to allow the use of finite element or experimental modal response data for the structure. Two simplifying assumptions, which significantly reduce the computation effort involved in this modal analysis technique, can usually be made without significant loss of accuracy. First, assume the acoustic natural frequencies are not significantly altered by the wall impedance ($C_{nr} = 0$ when $n \neq r$). Second, assume the internal acoustics do not significantly alter the structural natural frequencies,

$$\sum_{n} \frac{P_n(t)\, L_{nm}}{M_n^a} = 0$$

in the structural equation. VIN implements both of these assumptions to achieve significant reductions in computation time. An approximate technique is used to account for the retransmission of sound (loss of energy from inside to outside).

## 6.2 Review Statistical Energy Analysis Method Used in VIN

Statistical Energy Analysis (SEA) is a method of approaching vibrational problems using energy as the independent variable along with the time-honored assertion

Energy In = Energy Out

From this rather firm foundation, a series of assumptions, which form the essence of the approach, are made. These assumptions can be fairly rigorously stated as follows:(5)

1. The total vibrating system can be partitioned into SEA elements (with suitable boundary conditions) whose modes approximate the modes of the original vibrating system.
2. The energy in one frequency band of a system element is equally distributed among the modes of that element occurring in the frequency band.
3. The modes of the elements of a system contain all the vibratory energy of the system.
4. Only modes occurring within the same frequency band are coupled.
5. For two coupled elements, all the modes occurring in one of the elements in one frequency band are equally coupled to each mode occurring in the same frequency band in the other element.

Modal analysis, as described in section 6.1, is used in VIN to calculate the interior pressure in the lower frequency bands of interest. When there are sufficient acoustic modes occurring in a frequency band to make the SEA assumptions valid, VIN (or the user) can switch to the statistical energy method of calculating the response. The particular SEA formulation implemented in VIN is a modification of that found in reference 3. It allows the user to describe a system consisting of several interconnecting cavities, each with structural walls that can be exposed to external excitation. Power is allowed to flow through the structural walls to and from the external environment and through the openings connecting the cavities. Power is dissipated through structural damping and acoustic absorption. The power balance equation: Power In = Power Out

$$\{W\} = [C]\{p^2\}$$

$\{W\}$ is the input power matrix

$$W(k) = \sum_j W(k, j), \text{ where j is a surface adjacent to volume k}$$

$[C]$ is the square coefficient matrix representing the output power from each subcavity and $$C(k, k) = C_a(k, k) + \sum_j C_j(k, k) + \sum_\ell C_\ell(k, k)$$

$$C(k, i) = \sum_\ell C_\ell(k, i)$$

$\{p^2\}$ is the band-limited mean square internal pressure in each cavity

$C_a(k, k)$ - power absorbed by the walls of each cavity

$C_j(k, k)$ - power reradiated through the transmitting walls of the cavity to the outside environment

$C(k, i)$ - power transferred to other subvolumes through openings connecting the cavities

$$W(k) = \sum_j W(k, j) \quad \text{where surface j is adjacent to volume k}$$

$$= \sum_j \Bigg[ \left\langle \frac{S_{pbl}(\omega_c)}{\Delta\omega} \right\rangle \bullet \Bigg( \frac{\rho A^4}{2\pi C_o} \bullet \sum_{b=(\text{band}-2)}^{\text{band}} n_b \bullet \left\langle \frac{J_b^2(\omega_c)\, J_b^{2^{\text{rev}}}(\omega_c)}{M_b^2} \right\rangle_b$$

$$\bullet \int_{\omega_1}^{\omega_2} \frac{\omega^4}{|Y_b(\omega)|^2}\, d\omega + \frac{\rho A^4}{4\pi C_o}\, n_r \bullet \left\langle \frac{J_r^2(\omega_c)\, J_r^{2^{\text{rev}}}(\omega_c)}{M_r^2} \right\rangle_r$$

$$\bullet \frac{\pi \omega_c}{\eta} \Bigg) \Bigg]_j$$

where

$\rho$ = density of fluid in cavity

$C_o$ = speed of sound in fluid

$\langle S_{pbl}(\omega_c) \rangle$ = space-averaged, band-limited mean square blocked pressure on the structure

$A$ = area of surface

$S_{pbl}(\omega_c)$ = external blocked power spectral density of the surface pressure at frequency $\omega_c$.

$$J^2(\omega) = \frac{1}{S_{pbl}(\omega_c)\,A^2} \int_A \int_{A'} S_{bl}(x_o \,|\, x'_o, \omega)\, \psi_m(x'_o)\, dA'dA$$

called the joint acceptance.

$S_{bl}(x_o \,|\, x'_o, \omega)$ = cross power spectral density of the external blocked surface pressure at frequency, $\omega$.

$J^{2^{rev}}(\omega)$ = joint acceptance of the internal reverberant field with the structure.

$\psi_m(x_o)$ = structural mode shape.

$n_b$ = number of structural modes in band b.

$n_r$ = number of structural modes in band r.

$\Delta\omega$ = frequency band width.

$\omega_c$ = center frequency of the band of interest.

$\eta$ = structural damping loss factor.

$M_b$ = average generalized mass of the structure in band b.

$M_r$ = average generalized mass of the structure in band r, the band of interest.

$|Y_b(\omega)|^2$ = structural receptance squared, averaged over band b.

expanding on the output power matrix:

$$C(k, k) = C_\alpha(k, k) + \sum_j C_j(k, k) + \sum_\ell C_\ell(k, k)$$

$$C(k, i) = \sum_\ell C_\ell(k, i)$$

$$C_\alpha(k, k) = \frac{1}{2\rho C_o} \sum_j \alpha_j A_j \quad \text{surface j adjacent to volume k}$$

$$C_j(k, k) = \pi A^2 n_r \left\langle \frac{J_r^{2^{rev}}(\omega_c)}{M_r} \right\rangle_r$$

With surface j adjacent to k

$$C_\ell(k, k) = \frac{A_\ell}{4\rho c} \frac{\theta_\ell}{(\theta_\ell^2 + X_\ell^2)}$$

$$C_\ell(k, i) = \frac{-A_\ell}{4\rho c} \frac{\theta_\ell}{(\theta_\ell^2 + X_\ell^2)}$$

where

$\alpha_j$ = normal surface absorption of surface j

$A_j$, $A_\ell$ = area of surface j and $\ell$ respectively

$\theta_\ell$, $X_\ell$ = opening correlation factors

Careful examination of the SEA equations will show that the user must supply four types of information:

1. Vehicle geometry
2. Structural high frequency response characteristics
3. Surface absorption of acoustic energy
4. External excitation description

### 6.3 Graphically Define Geometry of the Problem

Prepare a clear and uncluttered isometric or three view plan drawing of the vehicle. The scaled drawing should show the outline of the vehicle's cavities and not the structural details of the vehicle's walls. A rectangular, global coordinate system should be established on the drawing.

### 6.4 Partition the Volume Into Subvolumes and Define Openings

Often the internal geometry of a problem is so complex that the acoustic modal response characteristics are not known. With VIN's acoustic component mode synthesis capability, the user can calculate the modal response characteristics of the complex cavity. The interior of the vehicle, or the cavity, must be partitioned or further idealized as several simple shapes with known hard wall acoustic modes connected together to approximate the more complex shape. The connection between the subcavities are termed openings. The mode shapes of each opening must also be known. The response characteristics of each subvolume and opening is held in the program's library of elements, which is fully described later.

VIN can calculate the space-averaged pressure squared over each subvolume. This provides valuable information on the spacial distribution of the acoustic pressure in the vehicle.

When the acoustic modal density is greater than 6 or 7 modes per one-third octave, the response characteristics can be considered reverberant and therefore independent of cavity shape. When this is the case, statistical energy analysis can be used. The subvolumes are retained for the statistical energy analysis and are termed acoustic SEA elements with reverberant response characteristics. In this way, the spatial distribution of the acoustic pressure can also be estimated in the high frequency regime since the average pressure in each subvolume is calculated.

### 6.5 Idealize the Structure for Modeling

The primary concern in the development of the drawing has been the representation of the vehicle's interior acoustic geometry. In this step, the structural elements are identified and related to the subvolumes of the problem defined in section 6.4. The idealized structure will consist of transmission surfaces and absorption surfaces. These surfaces must lie on or within the bounds of the subvolumes that idealize the acoustic geometry. It is preferable for the idealized structures to lie on the bounds of the subvolume, but some approximation is allowed. Transmission surfaces are surfaces that may vibrate and transmit acoustic energy into the subvolumes. Absorption surfaces are surfaces that may absorb acoustic energy but are assumed to be rigid. The drawing should be modified so that it consists only of surface and subvolume elements that are in the program's element library.

The motion of each portion of the vehicle's structure is dependent, to some degree, on the motion of all other parts of the vehicle. In essence, the vehicle has only one transmission surface. In many cases, however, sections of the vehicle structure are well insulated from each other by rigid or relatively massive boundaries, and the structures respond somewhat independently from each other. Each structural wall of the vehicle whose motion can be independently described is termed a "master surface." The user is required to define the structural response characteristics of each master surface. The details of how this is accomplished is described in later sections.

Any master surface that extends over two or more subvolumes must be partitioned into subsurfaces, one for each subvolume that is bounded by that particular master surface. This is required because of the calculation techniques used in VIN. The response characteristics of each subsurface is calculated by VIN from the master surface data supplied by the user. Each subsurface can be assigned different acoustic absorption characteristics.

The master surface declaration can be used in conjunction with the definition of the master surface response characteristics to build a model of the structure that is valid over a larger range of frequencies. Consider, for example, a frame-stiffened structure. At low frequencies, the structure has modal characteristics that span its whole length. At higher frequencies, however, the panels bounded by the frames may vibrate somewhat independently. To represent this behavior, the user may define one master surface that describes the low frequency modes and several other surfaces to represent the higher frequency behavior. All that is required of the user to implement this double description of a structure is to simply doubly describe the structure and make sure the response characteristics assigned to each do not overlap in the frequency domain.

An absorption surface should be defined so that no portion of the surface bounds more than one subvolume. A subvolume may have as many absorption surfaces as the geometry requires. Since the acoustic independance of each absorption surface must be constant, multiple absorption surfaces can be used to model acoustic impedance variations over a wall. At this point, the isometric drawing should consist only of surface and volume elements that are resident in the program's element library.

### 6.6 Number Surface and Volume Elements and Assign Nodes

With the isometric drawing now consisting only of surface and subvolume elements with known response characteristics, preparations must be made for communication of this geometry to the program. First, starting at one end of the vehicle and working to the other, number each subvolume. Second, number all the openings. Third, starting with 1, number all the master transmission surfaces in the same orderly manner. Third, continue the surface tally by numbering the transmission subsurfaces. Fourth, continue the surface tally by numbering the absorption surfaces. The total number of surfaces counted are

$$NS = NMS + NSS + NAS$$

NS = number of surfaces
NMS = number of master transmission surfaces
NSS = number of transmission subsurfaces
NAS = number of absorption surfaces

The geometry of each of the surface, volume, and opening elements is communicated to the program by a method similar to that used in large finite element programs. Each element (master transmission surface, transmission subsurface, absorption surface, subvolume and opening) is identified by type. A certain number of "nodes," or position points, are associated with each element type. Documentation for the program libraries defines where the nodes should be located on each element type. The nodes associated with each element type should be clearly marked and numbered on the isometric drawing. A node can and should be used, if possible, in the definition of more than one element. The nodes associated with each element type define the orientation of the element's geometry with respect to its own local rectangular coordinate system and the global coordinate system of the problem as a whole. The nodes also provide the limits for surface integration purposes. A minimum of three nodes are required to define an element type. The first node fixes the location of the origin of the element's coordinate system in the global coordinate space. The second and third nodes also provide limits for surface integration purposes in many of the element types. Any additional nodes provide the reference points required to fully define the element geometry. The maximum number of nodes needed is solely a function of element type.

The description of the element geometry is completed by the analytical information held in SGEOM, which calculates

$$Z = f(x, y)$$

and

$$G(x, y) = \sqrt{1 + \left(\frac{\partial z}{\partial x}\right)^2 + \left(\frac{\partial z}{\partial y}\right)^2}$$

where

$Z = f(x, y)$ is equation of the surface

$\frac{\partial z}{\partial x}$ is the partial derivative of z with respect to x

$\frac{\partial z}{\partial y}$ is the partial derivative of z with respect to y

This information is required for accurate surface integration.

Elements are differentiated by response characteristics and not geometry. For example, a rectangular panel with ribs may be in the library as element 5, while a simple rectangular panel without ribs is element 2.

## 6.7 Update Program Library of Elements

The geometry and modal response characteristics of all the elements used in the drawing completed according to the directions of section 6.6 must be known. The program library contains some commonly used structural and acoustic elements. The library was not intended, however, to be static. Rather, the library provides a simple and structured means for the user to add geometry and response information for the user's particular problems as they arise. If library elements, from past problems, fit the present problem, then they may be used. This source code held library has the following organization:

### Program Library of Elements

A. Program library of modal elements
    I. Volume elements
    II. Opening elements
    III. Analytic volume/opening coupling, $L_{nm}$
    IV. Structural elements

B. Program library of SEA elements

In addition to the program libraries held in the source code, VIN provides an orderly method of maintaining data files of structural and acoustic response characteristics and program-calculated parameters associated with specific structures and volumes. The data file capability significantly reduces the computational effort associated with design studies where the effect of various parameter changes are investigated. Essentially all cogent information is placed in mass storage so that it can be retrieved in total or in part for use in a similar problem. (That is, a slightly changed structure, increased damping, or adding a wall in the acoustic space constitutes a new problem but does not invalidate many of the parameters calculated previously.)

<u>Data File</u>

A. System specific parameters
B. Structural surface specific parameters

### 6.7.1 Program Library of Modal Elements

Surface integrations involving structural and acoustic mode shapes are the heart of the modal analysis equations. The program library of modal elements provides for the calculation of these surface integrals. The modal information can be held in the library in several different forms. All mode shape definitions are given in the particular element's coordinate system. Recall that the complex cavity mode shapes are represented by a series of coefficients multiplied times the hardwall acoustic mode shape of the cavity's subvolumes:

$$F_{n'}(x_o) = \sum_n P_n(n',v)\, F_n^v(x_o) \Big/ M_n^a$$

where

$F_{n'}(x_o)$ = mode shape of the n' mode of the multiple cavity system

$P_n(n',v)$ = influence coefficient of n' cavity mode for subvolume v

$F_n^v(x_o)$ = hardwall acoustic mode shape of subvolume v

The volume or acoustic modal element descriptions provides the hardwall acoustic mode shapes, $F_n^v(x_o)$.

The opening modal elements are needed for acoustic component mode synthesis. Acoustic omponent mode synthesis requires the calculation of coupling facors, $L_{nm}$, between the subvolumes of the cavity and the openings that connect the subvolumes. Recall that

$$L_{nm} = 1/A \iint_A \psi_m(x_o)\, F_n(x_o) dA$$

where

$\psi_m(x_o)$ = opening mode shape

$F_n(x_o)$ = hardwall subvolume acoustic mode shape

$A$ = area of opening

Provision is made in the component mode synthesis portion of the program code for analytic calculation of the opening/subvolume $L_{nm}$. If analytic calculation is not possible, then the integration is carried out by gaussian quadrature.

Structural mode shapes can be in analytical or double sine series form. The double sine series can represent structural mode shapes from extensive analytical techniques, finite element analysis, and/or experiment.

Examine the documentation for the program library of modal elements in appendix A. The volume elements now held in the program code are

1. Rectangular parallopiped
2. Circular cylinder with closed ends
3. Concentric circular cylinder with closed ends

The opening elements now held in the program code are

1. Rectangle
2. Circle
3. Concentric circular annulous

The volume/opening analytic coupling $L_{nm}$ are

1. Rectangle/parallopiped
2. Circle/circular cylinder
3. Concentric circular annulous/circular cylinder
4. Concentric circular annulous/concentric circular cylinder annulous

The structural elements held in the program code are

1. Rectangular surface shape with Fourier series mode descriptions
2. Thin, orthotropic, rectangular panel with simply supported edges
3. Circular surface shape with Fourier series mode descriptions
4. Thin, homogeneous, circular panel with fixed edges
5. Frame-stiffened, orthotropic whole-shell segment with shear end conditions at cylinder ends
6. Frame-stiffened, orthotropic shell segment with shear end conditions at all boundries.
7. BBN finite element mode shape description method.
8. Thin, orthotropic rectangular panel with clamped edges.

Additional element types can be added to the library as required. The following instructions describe how an update is made.

The documentation for the new elements should be fully prepared before any additions to the source code are made. Acoustic modal element documentation should follow the pattern.

a. Element number assignment and description
b. Drawing of the element, including locations of the element nodes
c. Natural frequency equations
d. Mode shape equations
e. Summary program variables associated with volume elements

a. <u>Element number assignment</u>

The element is accessed via its unique element number. The description is for comments in the program code and for titles in the documentation.

b. Drawing of the element, including locations of the element nodes

The element geometry is depicted on a rectangular coordinate system in a manner most conducive to defining the shape with the least number of nodes. The nodes are located such that

Node 1 - at the origin of the coordinate axis
Node 2 - on the positive x-axis
Node 3 - on the positive y-axis
Node 4 - on the positive z-axis

Additional nodes may be assigned as required to supply the needed dimensions in the natural frequency and mode shape equations.

c. Natural frequency equations

Using basic acoustic constants and the dimensions supplied by part two, provide an equation for the calculation of the hardwall acoustic natural frequency as a function of mode number (modal index).

d. Mode shape equations

Using the dimensions supplied in part two, provide an equation for the calculation of the hardwall acoustic mode shape as a function of position and mode number. The mode shapes must be normalized such that

$$M_n^a = 1/V \iiint F_n^2(x_o) dV = 1.0$$

e. Summary of program variables associated with volume element descriptions

The program variables to be used in the volume element descriptions are summarized in part e.

Opening modal element and analytic $L_{nm}$ documentation should follow the pattern:

a. Element number assignment and description

b. Drawing of the element, including location of the element nodes

c. Mode shape equations

d. Summary of program variables associated with opening element descriptions

a. Element number assignment and description

The opening element is accessed via its unique opening element number. The description is used in organizational comments in the program code and for titles in the documentation.

b. Drawing of the element, including location of the element nodes

The opening element geometry is depicted on a rectangular coordinate system in a manner conducive to defining the shape with the least number of nodes. The nodes are located such that

Node 1 - at the origin of the coordinate axis

Node 2 - on the positive x-axis at the furtherest extent of the element in the x-direction

Node 3 - on the positive y-axis at the furtherest extent of the element in the y-direction

Additional nodes may be assigned as required to supply the needed dimensions in the mode shape equations.

c. Mode shape equations

Using the dimensions supplied in part II, provide an equation for the calculation of the opening mode shapes. The opening types have certain "allowed frequency" constant that also affect the mode shape. Equations for calculating these values as a function of modal index numbers must also be provided.

d. Summary of program variables associated with opening element description

The program variables to be used in the opening element descriptions are summarized.

Structural modal element documentation should follow the pattern:

a. Element number assignment and description

b. Drawing of the element, including location of the element nodes

c. Surface equations

d. Natural frequency equations and structural constants

e. Mode shape equations

f. Summary of program variables associated with structural element

a. Element number assignment and description

The element is accessed via its unique element number. The description is for organizational comments in the program code and for titles in the documentation.

b. Drawing of the element, including location of the element nodes

The element geometry is depicted on a rectangular coordinate system in a manner conducive to defining the shape with the least number of nodes. The structural element may be three-dimensional as long as it is single valued in the z-direction (component coordinate system). The nodes are located such that

Node 1 - at origin of the coordinate axis

Node 2 - on the positive x-axis at the furtherest extent of the element's projection in the x-direction

Node 3 - on the positve y-axis at the furtherest extent of the element's projection in the y-direction

Additional nodes may be assigned as required to supply the needed dimensions in the natural frequency and mode shape equations.

c. Surface equations

An equation of the surface is established as a function of the component x and y positions: $z = f(x,y)$. As described in section 6.6, a correction factor for the surface shape must also be supplied for surface integration:

$$G(x,y) = \sqrt{1 + \left(\frac{\partial z}{\partial x}\right)^2 + \left(\frac{\partial z}{\partial y}\right)^2}$$

Note that if $z = \text{constant}$, $G(x,y) = 1.0$. The jacobian of the coordinate system of integration must also be provided.

d. Natural frequency equations and structural constants

Supply the structural constants and the equation needed to calculate the structural element's natural frequencies. Alternatively, the natural frequencies can be supplied as data by the user. If this is done, the mode shapes must also be given by data, in which case the structural element description held in the program code reduces to a simple description of the surface geometry for integration purposes.

e. Mode shape equations

Using the dimensions supplied in part II and the constants supplied in part IV, provide an equation for the calculation of the structural mode shapes. Alternatively, the mode shapes can be given by data (double sine series) as discussed in part IV above.

f. Summary of program variables associated with structural element description

The program variables to be used in the structural element descriptions are summarized.

The mode shape data can be supplied directly in double sine series form or as raw data in the NASTRAN output format. The program converts the Nastran output formatted data to double sine series form. All mode shapes will be normalized such that

$$M_m = 1/A \iint_S m\, \psi_m^2(x_o) ds = 1.0$$

Once the documentation is completed, the information must be added to the program source code. The fully commented code (appendix D) in combination with the documentation for the program library of modal elements (appendix A) clearly demonstrates how the volume, opening, and structural elements are to be added to the code.

### 6.7.2 Update Program Library of SEA Element Types

The geometry of the problem, as defined by the isometric drawing completed in section 6.6, remains valid throughout all program computations regardless of the computation method--modal analysis or SEA. The equations for the structural mode shapes and natural frequencies given for the master surfaces in section 6.7.1 may not, however, be suitable to reflect the statistical emphasis needed in the higher frequencies for good SEA estimates. Consequently, VIN holds a library of structural SEA descriptions that may be assigned to any of the master surfaces. Appendix B documents the SEA descriptions presently in the library and the parameters associated with them. The acoustic SEA elements are assumed to exhibit the well-known reverberant field characteristics and hence are shape independent.

Examine the documentation for the program library of SEA descriptions in appendix B. The SEA descriptions now held in the program code are

1. Equivalent rectangular panel with end conditions ranging from simply supported to clamped.
2. Equivalent orthotropic whole shell with shear diaphram end conditions.
3. Direct data: RJA, RJARV, MD.

Additional SEA descriptions can be added to the library as required. The following defines the procedure for making an update.

The documentation for the new elements should be fully prepared before any additions to the source code are made. SEA documentation should follow the pattern:

a. SEA description number assignment
b. Modal density equations
c. Joint acceptance equations
d. Summary of program variables associated with SEA element description.

a. SEA description number assignment

The SEA response description is accessed via its unique SEA response description number.

b. Modal density equations

Supply the equations needed to calculate the modal density of the element as a function of frequency. Frequency dependent constants can be defined and held in the "SEA constants"' array, WMH (NSEAC, NTOB), where NSEAC is the number of SEA constants and NTOB is the number of frequency bands. These and/or additional constants are also used in part 4.

c. Typical joint acceptance definition

The joint acceptance may be calculated either directly by user-supplied, semi-empirical equations or by the program's analytical integration of equivalent mode shape descriptions. Frequency dependent parameters required by the selected method may be held in the array WMH as discussed previously. Either or both methods may be used in a single problem.

d. Summary of program variables associated with SEA descriptions

Once the documentation is complete, the information must be added to the program source code. The fully commented code (appendix D) in combination with the documentation for the program library of SEA elements (appendix B) clearly demonstrates how the SEA elements are to be added to the code.

### 6.7.3 Organization and Use of Data File

All cogent information for any problem solved by VIN can be stored in a data file so that the information may be retrieved in total or in part for use in a similar problem. The data file holds two types of information: system specific and structural surface specific parameters. The system specific parameters are stored in files L1-L6. These described the geometry, acoustics, and acoustic dependent parameters of the problem. The structural surface specific parameters are stored in files L7-L10. These describe the dynamics of structural elements, including generalized force as specified for that surface. Mass storage files L16-L18 are sometimes required for short-term storage of intermediate calculations and are not a part of the permanent data file.

Each problem stored receives a unique problem number. Each structural surface element stored receives a unique "stored" structural element number. File L0 contains an index of the stored data. The index is printed whenever prestored data is used. The output of file L0 provides the following information:

| Data Set | Contents |
|---|---|
| 1. | NTAPE - Reference number for control card addressing |
| | NFV - Problems |
| | NFS - Master surfaces |
| | NPFCT - Pressure field constants |
| | NTOBT - Frequency bands |
| | NVT - Volumes in multiple cavity system |
| | NST - Surfaces in multiple surface system |
| | MXVT - Volume element nodes |
| | MXST - Surface element nodes |
| | NAMT - Acoustic modes |
| | NSMT - Structural modes |
| | MXT - Fourier series m-direction limit |
| | NXT - Fourier series n-direction limit |
| | NAMMCT - Important acoustic modes |
| | NSEACT - SEA constants |
| | NPA - Actual number of problems now on data set |
| | NSA - Actual number of surfaces now on data set |

| Data Set | Contents |
|---|---|
| | Problem |
| 2 | NN - Nodes |
| | NS - Surfaces |
| | NMS - Master surfaces |
| | MNSS - Subsurfaces |
| | NAS - Absorption surfaces |
| | MXS - Surface nodes |
| | NSMX - Structural modes |
| | NSC - Structural constants (modal analysis) |
| | NV - Volumes |
| | NXV - Volume nodes |
| | NAM - Volume modes |
| | NTOB - Frequency bands |
| | MFE - Surfaces with finite element descriptions |

MX - Fourier series terms in x-direction
NX - Fourier series terms in y-direction
NSEAC - SEA constants
NPFC - Pressure field constants
NWS - Discrete frequency steps over frequency range
NOO - Openings
LBAND - Lowest band of interest: Modal analysis
MBAND - Transition band: End modal analysis; begin SEA analysis
IHBAND - Highest band of interest
RO - Density of fluid in volume
CO - Speed of sound of fluid in volume
VOL - Volume of multiple cavity system
PREF - Reference pressure
ZERO - Value considered zero
EPS - Fraction of peak modal contribution considered negligible
BW - Bandwidth

A set of these parameters is given for each problem stored on the data tape.

Data Set    Contents

Structural Element

3 ISTYP - Surface type
NM - Modes of structure
NSC - Structural modal constants
IPF - Pressure field type
LBAND - Low band
MBAND - Transition band
IHBAND - High band
NSEAC - SEA constants
ISEAO - SEA structural type

A set of this data is held for each structural type on the data tape.

Random access storage parameters:

MNR = 1 + 10 + 20 (maximum number of records)
MRS = 20 (maximum record size)

IR = 1 for tape parameters
= 1 + NPROB for problem parameters
= 1 + 10 + ISUR for structural parameters

Note that this first file is sized with constants so that it may be read without prior knowledge of the value of the parameters on the file.

### File L1: Problem Geometry

| Data Set (NDS) | | |
|---|---|---|
| 1 | VNODC(MXV,3,NV) - | Volume mode locations (in subvolume coordinate system) |
| | VTM(3,3,NV) - | Transformation matrix for global-to-volume system |
| | VORG(3,NV) - | Origin offset: Volume-to-global coordinate system |
| | IVTYP(NV) - | Volume type |
| | ONODC(MXS,3,NOO) - | Opening node locations |
| | OTM(3,3,NOO) - | Transformation matrix for opening to global system |
| | OORG(3,NOO) - | Origin offset: Opening to global coordinate system |
| | IOTYP(NOO) - | Opening type |
| | SNODC(MXS,3,NS) - | Surface node locations (in surface coordinate system) |
| | STM(3,3,NS) - | Transformation matrix. for global-to-volume system |
| | SORG(3,NS) - | Origin offset: Surface-to-global coordinate system |
| | ISTYP(NS) - | Surface type: Modal analysis |
| | V(NV) - | Volume of subvolumes |
| | AREAO(NOO) - | Area of openings |
| | AREA(NS) - | Area of surfaces |
| | IGEMOV(2,NOO) - | Opening/subvolume relationships |
| | ISV(NS) - | Surface/subvolume relationships |
| | MASSUR(NMS,MNSS) - | Master surface/subsurface relationships |
| | NSDAT(NS) - | Data tape surface identification |
| | CENTF(NTOB) - | Center frequencies of frequency range of interest |

IFE(NMS) - Surface with finite element description identification

ISEAO(NMS) - Surface type: SEA

GNODE(NN,3) - Global node points

IOCM(MXS,NOO) - Opening nodes

ISURCM(MXS,NS) - Surface nodes

IVOLCM(MXV,NV) - Volume nodes

BNDWN(NTOBT,2) - Acoustic band of importance

Random access storage parameters:

MNR = NFV; maximum records in file

MRS = Total size of arrays above; maximum record size

IR = NPROB; mass storage record access number

## File L2 - Subvolume Natural Frequencies and Acoustic Mode Shape Integration Over Each Surface

Data Set (NDS)

1 WN(4,NAM,NV) - Natural frequency and mode shape index of subvolumes

2 CN(NAM,NS) - Integral of whole cavity acoustic mode shape over each surface

3 ZNDATA(NTOB,NS) - Surface acoustic absorption

Random access storage parameters:

MNR = NFV*3

MRS = AMAX(NST*NAMT, 4*NAMT*NVT)

IR = (NDS-1)*NFV+NPROB

## File L3: Acoustic Modal Response

Data Set (NDS)

1 WNMC(NAM) - Multiple cavity system's acoustic natural frequencies

2 VMNPA(NAM) - Generalized mass of each acoustic mode

3 ZANN(NAM) - Cavity acoustic damping

Random access parameters:

MNR = NFV*3

MRS = NAMT

IR = NPROB+(NDS-1)*NFV

### File L4: Portion of Cavity Generalized Mass in Each Subvolume

Data Set (NDS)

1 RMN(NAMT,NVT) - Portion of cavity generalized mass in each subvolume

Random access storage parameter:

MNR = NFV

MRS = NVT*NAMT

IR = (NPROB)

### File L5: Acoustic Component Mode Synthesis Constants of Constraint

Data Set (NDS)

1 PNMC(NAMMC) - Constants of constraint

Random access storage parameters:

MNR = NAMT*NVT*NFV

NRS = NAMMCT

IR = (NPROB-1)*NAMT*NVT+(NVOL-1)*NAMT+NWN

### File L6: Modal Selection for Constants of Constraint

Data Set (NDS)

1 INDPN(NAM) - Indicates which subvolume acoustic modes are important in the calculation of the whole cavity modes

Random access storage parameters:

MNR = NVT*NFV

MRS = NAMT

IR = (NPROB-1)*NVT+NVOL

### File L7: Structural/Acoustic Coupling Coefficient

Data Set (NDS)

1 VLNM(NAMT) - Structural/acoustic coupling coefficient

Random access storage parameters:

MNR = NSMT*NST
MRS = NAMT
IR = (ISUR-1)*NSMT+MWM+NSMT*NST*(NPROBN-1)

The structure specific parameters held in files L8 through L15 are briefly described in the following data file summary.

### File L8: Miscellaneous Structural Constants

Data Set (NDS)

1 NM,ISTYP,AREA - Number of modes, structure type, structure area

2 SC(NSC) - Structural constants for modal analysis

3 ZMDATA(NTOB) - Structural damping in each band of interest

4 SPL(NTOB) - Exterior sound pressure level on structure for each band of interest

Random access storage parameters:

MNR = 4*NFS
MRS = NTOBT
IR = (NDS-1)*NFS+NSDAT(ISUR)

### File L9: Structural Modal Data

Data Set (NDS)

1 WM(3,NSMT) - Structural modes and modal indexes

2 ZM(NSMT) - Structural modal damping ($C/C_c$)

Random access storage parameters:

MNR = NFS*2
MRS = 4*NSMT

### File 10: Generalized Force: Modal Analysis

<u>Data Set (NDS)</u>

1 RJA(NTOBT) - Joint acceptance or generalized force of each structural mode for the given external pressure field

Random access storage parameters:

MNR = NFS*NSMT

MRS = NTOBT

IR = (NSDAT(ISUR)-1)*NSMT+MWM

### File L11: (Blank and not assigned)

### File L12: Structure Modal Description

<u>Data Set (NDS)</u>

1 BPQ(MXT,NXT,NSMT) - Coefficients to double Fourier series description of mode shape

Random access storage parameters:

MNR = NFS

MRS = MXT*NXT*NSMT

IR = NSDAT(ISUR)

### File L13: Structure SEA Response Description

<u>Data Set (NDS)</u>

1 WMH(NSEAC,NTOB) - Structural SEA parameters for each frequency band of interest

Random access storage parameters:

MNR = NNFS

MRS = NSEACT*NTOBT

IR = NSDAT(ISUR)

## File L14: Structure SEA Joint Acceptance and Modal Density

Data Set (NDS)

1 RJA(NTOB) - Joint acceptance of modes in band (given external field)

2 RJARV(NTOB) - Joint acceptance of modes in band (reverberant pressure field)

3 MD(NTOB) - Modal density

Random access storage parameters:

MNR = 3*NFS
MRS = NTOBT*2
IR = (NDS-1)*NFS+NSDAT(ISUR)

## File L15: Bandwidth of Importance

Data Set

1 BNDWM(NTOB,2)

Mass storage parameters:

MNR = NFS
MRS = NTOB*2
IR = NSTOR(IS)

The following three files are used for short-term storage of intermediate program calculated parameters. The files are not part of the permanent data set.

### L16: EIMTX

1 EIMTX(NOO,NOM) - Constraint constants at the openings

MNR = NAM
MRS = NOO*NOM
IR = NWN

### L17: VLNM

1 VLNM(NAM,NMO) - LNM for openings and volumes in acoustic component mode synthesis

MNR = NOO*2
MRS = NAM*NMO

where
IF(IGEMOV(1,INO).EQ.NVOL)INV = 1
IF(IGEMOV(2,INO).EQ.NVOL)INV = 2
IR = (INV-1)*NOO+INO

File L18

Data Set (NDS)

1 NFES,NSM
((I,D1(I),D2(I),D2(I)),I=1,NFES),
((I,VM(I)),I=1,NFES),
((I,WM(I),(((SN(K,J,I),I=1,NSM),K=1,NFEN),J=1,3)

where
NFES - FE nodes in the data set
NSM - FE modes in the data set
D1 - x-coordinate in FE system of F.E. node
D2 - y-coordinate
D3 - z-coordinate
VM - Elemental mass at each node
WM - Natural frequencies
SN - Array of mode shapes, three translational degrees of freedom

Mass storage file parameters:
MRS = 6*MFE+2*NSMT+NSMT*3*MFE
MNR = NFEDS
IR = IFE(ISUR)

## 6.8 **Estimate the Structural Damping and Acoustic Absorption**

The structural damping and normal acoustic impedance must be estimated for the entire frequency range of interest for each master surface of the structure. The prediction accuracy of the program is usually affected more by estimates of these parameters than by any other single aspect of the modeling exercise. Because of the uncertainties usually associated with these factors, the user is advised to arrive at the answer to important problems based on a sensitivity analysis with damping and surface absorption as the variables. Such a sensitivity analysis would be less costly than it seems since VIN can save the results of the program's most time-consuming calculations for reuse in repeated runs of the same general problem.

## 6.9 Define External Acoustic Fields

The external acoustic field over each master surface must be specified. The program library of external pressure fields contains normalized descriptions of the most commonly encountered pressure fields. Each pressure field type is assigned a unique pressure field reference number. The program library of external pressure fields may be updated. The documentation follows the pattern:

a. Pressure field number assignment and description

b. Surface pressure field correlation equations
  1. Random: frequency domain
  2. Deterministic: frequency domain

c. Generalized force calculations

### a. Pressure field number assignment and description

Each pressure field description is accessed via its unique element number. The description is for comments in the program code and for titles in the documentation.

### b. Surface pressure field correlation equations

A pressure field is descriped in either random-frequency domain or deterministic-frequency domain terms. Each description is normalized to a reference pressure at the centroid of the surface on which the field is imposed. The description should be in the form of an equation. All constants that make the description more versatile are identified and allowed to be user-variable inputs to the program. (See documentation for program library of external pressure fields.)

### c. Generalized force calculations

Since the equations are formulated to calculate the space-averaged pressure squared, the generalized force is required in the form of a joint acceptance:

$$J^2_{mm}(\omega) = \frac{1}{A^2} \int_s \int_{s'} \frac{S_{pbl}(x_o|x'_o, \omega)}{S_{pbl}(\omega)} \quad \psi_m(x_o)\, \psi_m(x'_o) ds ds'$$

where

$S_{pbl}(\omega)$ = exterior blocked pressure power spectral density at a reference point

$S_{pbl}(\omega)$ = exterior blocked pressure cross-power spectral density

$A$ = surface area of structure

While this form is generally used for random external pressure field descriptions, it can also be used with deterministic data.

$$J^2_{mm}(\omega) = \frac{1}{A^2} \int_s \int_{s'} \frac{p(x_o, \omega)\, p^*(x'_o, \omega)}{|p(x_{ref}, \omega)|^2} \quad \psi_m(x_o)\, \psi_m(x'_o) ds ds'$$

where

$p(x_o, \omega)$ = complex pressure at point $x_o$

$|p(x_{ref}, \omega)|^2$ = pressure squared and reference point, $x_{ref}$

$= S_{pbl}(\omega)$

The deterministic field joint acceptance can be more easily obtained by calculating

$$Q_m(\omega) = \int_s p(x_o, \omega)\, \psi_m(x_o) ds$$

then

$$J^2_{mm}(\omega) = \frac{\left[Q_m(\omega) \quad Q^*_m(\omega)\right]}{A^2\, S_{pbl}(\omega)}$$

Once the generalized force is calculated in the form of joint acceptance, the remainder of the calculations are identical for the deterministic and random formulations.

If the surface mode shapes are given in analytical form, the above integrations are generally accomplished by Gaussian quadrature; however, analytic solutions are used in the program whenever such solutions are available. If the mode shapes are given in Fourier series form, analytical solutions are possible for some pressure field types as follows:

$$\psi_m(x_o) = \sum_p^{mx} \sum_q^{nx} \; {}_m\beta_{pq} \sin \frac{p\pi x}{xL} \sin \frac{q\pi y}{yL}$$

Substitute into the equations

$$J^2_{mm}(\omega) = \frac{1}{A^2} \sum_p^{mx} \sum_q^{nx} \sum_{p'}^{mx} \sum_{q'}^{nx} \; {}_m\beta_{pq} \, {}_m\beta_{p'q'} \left[ \int_{s'} \int_s \frac{S_{pbl}(x'_o | x'_o, \omega)}{S_{pbl}(\omega)} \right.$$

$$\left. \bullet \sin \frac{p\pi x}{xL} \sin \frac{q\pi y}{yL} \sin \frac{p'\pi x'}{xL} \sin \frac{q'\pi y'}{yL} \, ds ds' \right]$$

$$Q_m(\omega) = \frac{1}{A} \sum_p^{mx} \sum_q^{nx} \; {}_m\beta_{pq} \left[ \int_s p(x_o, \omega) \sin \frac{p\pi x}{xL} \sin \frac{q\pi y}{yL} \, ds \right]$$

Analytic solutions for the bracketed terms are mandated for computational tractability. The documentation for the program library of external pressure fields is given in appendix C. Point force excitation is among the external pressure, or forcing, fields resident in the library. The routine PRMCAL (see appendix D) provides fully commented directions on the addition of new pressure field types to the source code.

### 6.10 Prepare Input Data File

At this point, the user should have

1. Become familiar with the basic analytical techniques of the program.
2. Prepared isometric scaled drawing consisting only of surface and subvolume elements to be included in the program element libraries.
3. Identified master surface/subsurface relationships.
4. Numbered each subvolume and numbered each opening.

5. Numbered all surfaces in the correct order (master surfaces + subsurfaces + absorption surfaces).
6. Marked the location of the required nodes on each surface and subvolume on the isometric drawing and numbered the nodes.
7. Updated the modal and SEA element libraries and gathered finite element or experimental modal response information if required.
8. Gathered the relevant structural data on each surface, including the structural damping and acoustic impedance estimates.
9. Selected the external field description for each master surface.

The above information must now be communicated to the program via the Input Data File. Each aspect of the Input Data File is described in detail following the summary of its contents. Recommendations, based on experience with the program, for user-selected parameters are also provided.

In all the options, weak structural/acoustic coupling is assumed. Each option uses the modal analysis method. SEA analysis can be used only with option 1.

## Summary of Input Data File

Title
Subtitle
RC A. Option Selection
IOP
(MOP(I),I=1,4)
(IPRE(I),I=1,4)
NPROB, NPROBN, MTAPE, NTAPE

RC B. Sizing Parameters for New Data File
NFV, NFS, NPFCT, NTOBT, NVT, NST, MXVT, MXST, NAMT, NSMT, MXT, NXT, NAMMCT, NSEACT

RC C. Range: Frequency Domain
LBAND, MBAND, IHBAND, BW

RC D. Range: Discrete Frequencies
WI, WF, NWS

RC E. Tolerances
ZERO, EPS

```
RC   F.   Matrix Sizing
NN, NS, NMS, MASS, NAS, MXS, NSMX, NSC, NV, MXV, NAM, NTOB, MFE, MX, NX,
NSEAC, NPFC

RC   G.   Multiple Cavity Parameters
NAMMC, NOO, NOM, IOM, NG, DFQY, NI, ER

RC   H.   Opening/Volume Relationships
1,        NVOL(TAIL), NVOL(HEAD)

NOO, NVOL(TAIL), NVOL(HEAD)

RC   I.   Opening Description
1, IOTYP(1), AREAD(1), (IOCM(1,I),I+1,MXS)
.
.
.
NOO, IOTYP(NOO), AREAO(NOO), (IOCM(NOO,I),I-1,MXS)

RC   J.   Structural Data File Access and Storage
(NSDAT(I),I=1,NMS)
(NSTOR(I),I=1, NMS)

RC   K.   Global Node Points
1, X, Y, Z
.
.
.
NN, X, Y, Z

RC   L.   Surface Description
1, ISTYP(1), AREA(1), (ISURCM(1,I),I=1,MXS)
.
.
.
NS, ISTYP(NS), AREA(NS), ISURCM(NS,I),I=1,MXS)

RC   M.   Master Surface/Surface Relationships
1, (MASSUR(1,I),I=1,MNSS)
.
.
.
NMS, (MASSUR(NMS,I),I=1,MNSS)

RC   N.   Structural Constants:  Modal Analysis
1, (SC(1,I),I-1,NSC)
.
.
.
NMS, (SC(NMS,I),I=1,NSC)
                                        (leave off SC if NSDAT(ISUR).NE.O)
```

### RC O. Structural Modal Data

```
NFEDS
1,IFE(1),NFEN,SL1,SL2),
      IF(IFE(1).NE.O)THEN ALSO
(     IF(IFEN(J),J=1,NFEN)
      (STM(1,K,1),K-1,3),SORG(1,1)
      (STM(2,K,1),K-1,3),SORG(2,1)
      (STM(3,K,1S),K,1,3),SORG(3,1)
.
.
.
NMS,IFE(NMS),NFEN,SL1,SL2)
      IF(IFE(NMS).NE.O)THEN ALSO
      (IFEN(J),J=1.NFEN)
      (STM(1,K,NMS),K-1,3),SORG(1,NMS)
      (STM(2,K,NMS),K-1,3),SORG(2,NMS)
      (STM(3,K,NMS),K=1,3),SORG(3,NMS)
```

NOTE: Full FE data is on a prepared mass storage file (L18). The form of the data on that file is given under the description of file L18 in section 6.7.

### RC P. Structural Constants: Statistical Energy Analysis

```
1, ISEAO(1)
(WMH(J,1), J=1,NSEAC)
            .
            .
            .
(WMH(J,NTOB), J=1,NSEAC)
.
.
.
NMS, ISEAO(NMS)
      (WMH(J,1), J=1,NSEAC)
            .
            .
            .
      (WMH(J,NTOB), J=1, NSEAC)
```

### RC Q. Volume Description

```
1, IVTYP(1), V(1), (IVOLCM(1,(), I-1,MXV)
.
.
.
NV, IVTYP(NV), V(NV), (IVOLCM(NV,I), I=1,MXV)
```

### RC R. Acoustic Constants

```
RO, CO, PREF
```

```
RC   T.    Surface/Volume Relationships
1, ISV(1)
.
.
.
NS, ISV(NS)

RC   S.    Acoustic Modal Data

RC   U.    Surface Absorption
(ZNDATA(I),I=1,NTOP)                    IF MOP(3) = 1
                 -OR-
1, IX            IF MOP(3) = 0
(ZNDATA(1,I),I=1,NTOB)
.
.
.
NS, IX
(ZNDATA(NS,I),I=1NTOB)

RC   V.    Structural Damping
1, IX
(ZMDATA(1,I),I=1,NTOB)
.
.
.
NMS, IX
(ZMDATA(NMS,I)I=1,NTOB)

RC   W.    External Sound Pressure Level
1, IPF(1)
(SPL(1,I),I=1,NTOB)
      .
      .
      .
NMS, IPF(NMS)
(SPL(NMS,I),I=1,NTOB)

RC   X.    External Pressure Field Description
1, IPF(1)
(EX(1,I),I=1,NPFC)
      .
      .
      .
NMS,IPF(NMS)
(EX(NMS,I),I=1,NPFC)

RC   Y.    Band Center Frequencies
(CENTF(I)(I), I=1,NTOB)

RC   Z.    Reverberation Time
```

The Data Input File has 26 sections lettered A through Z. Each section of data cards is headed by a title card. Each title card begins with a read code. If the code is the integer 1, the program is alerted that the section is to be read. If the code is 0, the program is alerted that there are no cards in that section, and the program therefore will expect the following data card to be the next section's title card. The program options selected by the user determine which data sections are required and which are not. Variables are integer or real by the standard implicit definitions. All data reads are unformatted. Variables on a single card are simply separated by commas. Of course, all variables must be given in a consistent set of units.

## A. Option Selection

The option selection requires four data cards. The read code is always 1. The first card is for selection of the type of analysis.

Card A1: IOP - A single integer with

1 - Space-averaged, band-averaged pressure squared with random external pressure field excitation.

2 - Space-averaged pressure squared at discrete frequencies with random external pressure field excitation.

3 - Space-averaged, band-averaged pressure squared with deterministic excitation.

4 - Space-averaged pressure squared at discrete frequencies with deterministic excitation.

5 - Multiple cavity analysis only.

6 - Reverberation time.

The second option selection data card flags miscellaneous options. A "1" activates the option; "0" deactivates the option.

Card A2: MOP(4) - Four integers on the card with

MOP(1) - Retain mass storage file after execution of program.
MOP(2) - Surpress printing of the input data.
MOP(3) - Use experimental cavity damping.
MOP(4) - Use short BMN calculation on new modal data.

If a data file is to be kept for the problem at hand, set MOP(1)=1. The input data is automatically mirrored to a printer unless MOP(2) is set to 1. If acoustic damping is explicitly known as a function of frequency, it may be entered as data by setting the flag MOP(3) equal to 1. Otherwise it is assumed that the cavity damping must be calculated from surface absorption and acoustic modal characteristics. Finally, if new modal data is to be input, from finite element analysis or experiment, etc., the method of calculating the double sine series representation of the mode shapes can be selected. If MOP(4) is set to 1, then the surface integrations required to calculate the series coefficients will be simple summation of the modal data. Otherwise, a more sophisticated and time-consuming surface integration method will be used.

The third option selection card flags which parameters, if any, are available in the data file. Again, 1 activates the option and 0 deactivates the option.

Card A3: IPRE(4) - Four integers on the card with

IPRE(1) - Acoustic response precalculated.

IPRE(2) - Acoustic absorption precalculated

IPRE(3) - Structural/acoustic interaction, $L_{nm}$, precalculated for all surfaces.

IPRE(4) - Generalized force or joint acceptance precalculated for all surfaces.

Further details, such as "For which surfaces is the response precalculated?" are given in later sections of the input.

The fourth option selection card gives general data file access and storage information.

Card A4: Four integers on the card with

NPROB - Old problem access number
NPROBN - New problem access number
MTAPE - Old tape access number
NTAPE - New tape access number

If precalculated acoustics are to be used in this run of the program, the problem's reference number must be given. If there is no previous problem, set NPROB to zero. If the important parameters of the problem at hand are to be saved for future use, the problem must be given a reference number. Two tapes are used to eliminate the possibility of a write error destroying the data tape. The data tape, referenced by file number MTAPE, is read into random access mass storage files. During the execution of the program, the random access files are updated with the new data from NPROBN. At the completion of the run, a new tape-- NTAPE--which holds all the previous data and the new data, is created.

## B. New Data File Sizing Parameters

The parameters given in this section size the mass storage files. Each parameter is the maximum number allowed for the particular data file. Once these parameters are set for a given data file, they cannot be changed. Any problem placed on the data file may have smaller but never larger values of these parameters. The B card is only read if a new data file is to be created.

Card B1: NFV, NFS NPFCT, NTOBT, NVT, NST, MXVT, MXST, NAMT, NSMT, MXT, NXT, NAMMCT, NSEACT

NFV - Problems stored on data file
NFS - Structural surface descriptions
NPFCT - Pressure field constants
NTOBT - Frequency bands
NVT - Subvolumes in multiple cavity system
NST - Surfaces in the problem
MXVT - Volume nodes
MXST - Surface nodes
NAMT - Acoustic modes
NSMT - Structural modes
MXT - Largest index in the M direction for Fourier series modal response representation
NXT - Largest index in the N direction for Fourier series modal response representation
NAMMCT - Multiple cavity nodes of importance
NSEACT - Statistical energy analysis constants

The data file is intended to reduce the overall computational requirements of a design concept evaluation or a sensitivity analysis of a particular problem. The preferred values of the constants will therefore depend on the size of the general problem at hand.

## C. Range: Frequency Domain

Factors that define the frequency range of the program's calculations are given on the C data card.

Card C: LBAND - Lowest frequency band of interest
MBAND - Band at which SEA assumptions become valid
IHBAND - Highest frequency band of interest
BW - Frequency band width factor (0.12 for one-third octave bands)
where $1 \leq \text{LBAND} \leq \text{MBAND} \leq \text{IHBAND} \leq \text{NTOB}$

The user directs the use of modal and/or statistical energy analysis, when allowed by the option selected, by the selection of LBAND, MBAND, and IHBAND. Between LBAND and MBAND the program uses the modal analysis method. Between MBAND and IHBAND the program uses the statistical energy analysis method if option 1 or 3 was selected. Hence, if MBAND is set equal to IHBAND, only modal analyis is performed. On the other hand, if LBAND is set equal to MBAND only SEA is performed. While the program can handle full octave bands, one-third octave band averaging is recommended.

The selection of MBAND is entirely a function of the internal acoustics of the problem. SEA assumptions become valid at the frequency above which the internal acoustics can be considered reverberant (more than six acoustic moodes per one-third octave band). Due to geometry, this frequency is also assumed adequate for SEA descriptions of the structural response. A good estimate of the correct point to shift to SEA can be made by

1. Select the subvolume with the smallest volume.
2. Calculate $f = 1300/\sqrt[3]{v}$ (with volume, v, in $ft^3$).
3. MBAND is the band whose center frequency is closest to but not less than f.

MBAND selection in this manner assures that the acoustic field within each subvolume can be considered reverberant. At this point, the SEA analysis can be used to calculate noise levels averaged over each subvolume.

D. Range: Discrete Frequency

Factors that define the range of the program's discrete frequency calculations are given on the D data card.

Card D: WI, WF, NWS

WI - The initial frequency
WF - The final frequency
NWS - The number of frequency steps across range

This data card is needed only when calculation option 2 or 4 is selected.

E. Tolerances

All input tolerances are given on the E card.

E Card: Zero - Value considered 0.0
EPS - Fraction of the maximum contribution from a single mode that can be neglected in the modal summations

EPS is used in the routine BNDCAL to establish structural and acoustic bandwidths of importance for each band. This sophisticated modal summation limiting method assures that only the modes significant in each band are used in the calculations.

F. Matrix Sizing

The matrix sizing establishes, to a great extent, the size of the problem at hand.

F Card: NN - Global node points
NS - Surfaces
NMS - Master surfaces
MNSS - Subsurfaces per master surface
NAS - Absorption surfaces
MXS - Nodes per surface

NSMX - Structural modes per surface
NSC - Structural constants
NV - Subvolumes in system
MXV - Nodes per subvollume
NAM - Acoustic modes per subvolume
NTOB - One-third octave bands
MFE - Finite element nodes
MX - X-direction Fourier series summation limit
NX - Y-direction Fourier series summation limit
NSEAC - SEA constants
NPFC - Pressure field correlation constants

Parameters NN through MXS are all obtained from the problem drawing as described in section 6.6. The maximum number of structural modes, NSMX, needed for a particular problem depends on both the frequency range of interest and the structures involved in the problem. A good estimate of the NSMX required can be obtained by

1. Select the structure with the lowest natural frequency.
2. Recall the highest frequency band to which the modal analysis will extend (MBAND-1).
3. NSMX is the number of structural resonances below the center frequency of band MBAND.

If only SEA is to be used, set NSMX to zero. The maximum number of structural constants, NSC, is simply a function of the structural types in the modal analysis portion of the problem.

Parameters NV and MXV are obtained from the drawing of the problem as described in section 6.6. The maximum number of acoustic modes, NAM, needed for a particular problem depends on the frequency range of interest and the acoustic subvolumes of the problem. A good estimate of the NAM required can be obtained by

1. Select the largest subvolume of the multiple subvolume system.
2. Recall the highest frequency band to which the modal analysis will extend (MBAND-1).

3. NAM is the number of subvolume acoustic resonances below one and one-half times the MBAND center frequency.

If only SEA is to be used, set NAM to zero. The number of one-third octave bands, NTOB, establishes the maximum range of frequencies the calculations may cover.

The matrix sizing parameters MFE, MX, AND NX have to do with the description of modes with double Fourier series. If modal data is to be given, the maximum number of points at which the mode shape is defined must be provided. MX and MY must be chosen large enough to adequately define the mode shapes over the surface with the double Fourier series. Since the mode shapes are only used in surface integrations, exact replication of the shape is not required. The MX and NX, however, must be sufficiently high to match the number of nodal lines in the highest frequency structural mode to be approximated. The number of SEA constants, NSEAC, and the number of pressure field constants, NPFC, are determined by the structural types and the external pressure field types called out in the problem.

## G. Multiple Cavity Parameters

The G card provides the parameters that direct certain aspects of the acoustic component mode synthesis.

G card: NAMMC - Acoustic modes important around exciting frequency
NOO - Openings
NOM - Opening modes
NMO - Total opening modes available
GN - Acoustic modes assumed at some opening mode set
DFQY - Frequency step in natural frequency calculations
NI - Iterations allowed in Newton Raphson convergence on the acoustic natural frequency
ER - Error limits in Newton Raphson iteration

The number of opening modes, NOM, is by far the most important factor in the component mode synthesis computation time requirements. A technique is used to select the most important NOM opening modes from an array of NMO opening modes based on the multiple cavity natural frequency. The evaluation method is executed once for every NG acoustic multiple cavity modes.

## H. Opening/Volume Relationships

The opening/volume relationships are used in the generation of the acoustic component mode synthesis equations. There are NOO "H" cards.

H cards: 1 NVOL (tail), NVOL (head)
.
.
.
NOO, NVOL (tail), NVOL (head)

The first integer on each card is the opening number as defined on the problem's drawing (see 6.6). The second integer is the lower subvolume number of the two subvolumes separated by the opening. The third integer is the higher adjacent subvolume number. The subvolumes are also as numbered in section 6.6.

## I. Opening Description

The opening element types, area and geometry are needed for the acoustic component mode synthesis.

I cards: 1, IOTYP(1), AREAO(1), (IOCM(1,I), I-1,MXS)
.
.
.
NOO, IOTYP(NOO), AREA(NOO), (IOCM(NOO,I), I-1,MXS)

The first integer on the card is the opening number. The second defines the opening element type from the Program Library of Modal Elements. The third number on each I card is the area of the opening (real number). The final MXS integers are the global node points defining the opening geometry and location. If MXS is greater than the number of nodes required for any particular opening type, place zeros in the unneeded slots.

## J. Structural Data File Access and Storage

The mass storage data file, as described in section 6.7.3, holds structural response data calculated in previos computer runs. Each surface on the data file has a unique reference number. The J cards supplies the data file access and/or storage reference numbers

J card 1: NSDAT(1), ..., NSDAT(NMS)
.
.
.
J card 2: NSTOR(1), ..., NSTOR(NMS)

The first J card gives the data file reference number for each surface of the present problem. If no data exists for a particular surface, a zero is put in that slot. The second J card gives the reference number under which each surface of the present problem will be stored at the completion of the program calculations. Each J card must have NMS integers.

## K. Global Node Points

The global node points are used to locate the various volume, opening and surface elements of the problem in global coordinate space. Refer to the scaled drawing with the numbered node points to prepare the K cards.

K cards: 1, X, Y, Z
.
.
.
NN, X, Y, Z

The first entry on each K card is the node number. The next three real numbers are the global X, Y, and Z position of the node.

## L. Surface Description

The surface description cards define each surface element of the problem and locates the element in the global coordinate space.

L cards: 1, ISTYP(1), AREA(1), (ISURCM(IS,I),I-1,MXS)
.
.
.
NS, ISTYP(NS), AREA(NS), (ISURCM(NS,I),I-1,MXS)

The first integer on each L card is the surface number as identified on the isometric drawing of the geometry. The next integer, ISTYP(I), is the surface element reference number from the Program Library of Surface Elements. If the surface only inputs power in the SEA frequency range (another master surface is specified to provide the modal analysis data) then enter a zero for ISTYP(I). The surface area, AREA(I), is given next followed by the MXS nodes that locate the element in the global coordinate space. If MXS is greater than the number of nodes required for any particular surface type, place zeros in the unneeded slots. If ISTYP(I) is zero, then place zeros in all the ISURCM slots.

## M. Master Surface/Surface Relationships

When a master surface extends over more than one subvolume, subsurfaces are defined. Each subsurface is associated with only one subvolume. The M cards establish the relationships between the master surface and the subsurface.

```
M cards: 1, (MASSUR(1,I),I-1,MASS)
             •
             •
             •
         NMS, (MASSUR(NMS,I),I-1,MNSS)
```

The first integer on each M card is the master surface number as established on the isometric drawing of the geometry. The remaining MNSS entries on each card is the surface numbers of the subsurfaces associated with that particular master surface. Zeros are entered in the unneeded data slots. The number of data slots on each card is equal to (1+MNSS).

## N. Structural Constants: Modal Analysis

The structural constants needed for the modal response description of each master transmission surface can be provided in this data section.

```
N cards: 1, SC(1, 1), ..., SC(1,NSC)
             •
             •
             •
         NMS, SC(NMS,1), ..., SC(NMS,NSC)
```

The first integer on each N card is the surface number as identified on the isometric drawing of the geometry. The remaining NSC entries on each card are the real structural constants. If NSC is greater than the number of constants required for any particular surface type, place zeros in the unneeded data slots. The documentation for the Program Library of Surface Elements defines how many structural constants are needed and in what order they should be supplied. If the surface is already described in the data file (NSDAT(ISUR).NE.O) or (ISTYP(ISUR).EQ.O), then simply insert a card with the master surface number on it, omitting the structural constants.

## O. Structural Modal Data

This allows access to a prepared data tape of finite element structural response data.

```
O cards: NFEDS
           1,IFE(1),NFEN,SL1,SL2
             IF(IFE(1).NE.O) Read
               (IFEN(J),J=1,NFEN)
             (STM(1,K,1),K=1,d),SORG(1,1)
             (STM(2,K,1),K=1,3),SORG(2,1)
             (STM(3,K,1),K=1,3),SORG(3,1)
                .
                .
                .
             NMS,IFE(NMS),NFEN,SL1,SL2
               IF(IFE(NMS).NE.O) read
               (IFEN(J),J=1,NFEN)
             (STM(1,K,NMS),K=1,3),SORG(1,NMS)
             (STM(2,K,NMS),K=1,3),SORG(2,NMS)
             (STM(3,K,NMS),K=1,3),SORG(3,NMS)
```

The integer, NFEDS, indicates the number of sets of finite element data on the data tape. The first integer of the next card is the surface number. The next integer is the data access number for the master surface. If the master surface does not have a finite element description of the mode shapes, a zero is entered. NFEN is the number of nodes associated with the surface. SL1 and SL2 are the x and y dimensions of the surface. Should these factors not apply, enter a zero.

The next four data cards are required only if finite element data is associated with the surface. The array, IFEN(NFEN), holds the node numbers of the finite element data that are associated with the particular surface. The final three cards provide the transformation matrix STM and SORG needed to convert the locations of the finite element nodes from global F.E. coordinates to the local surface coordinate system.

A separate routine generates the data file from either card images or a NASTRAN data tape (output 4 format). This routine, FEPRP, is described in section 6.12. The data file holds the following information for each surface (modal analysis range).

NFEN - Number of finite element nodes
NSM - Number of structural natural frequencies
WM(1,NSM) - Natural frequencies
D1(NFEN) - X-position of each node
D2(NFEN) - Y-position of each node
D3(NFEN) - Z-position of each node
VM(NFEN) - Nodal mass
SN(NFEN,NSM) - The mode shape value of the three translational degrees of freedom

P. Structural Constants: Statistical Energy Analysis

The structural data needed to complete the SEA response description of each master surface are provided in this section. Since the response description models band averaged type parameters, the SEA structural parameters are given as a function of frequency, a set of constants for each frequency band of interest.

```
P cards: 1, ISEAO(1) : code card
         (WMH(J(J,1)), J=1,NSEAC) : data cards
           .
           .
           .
           (WMH(J,NTOB),J=1,NSEAC)
         .
         .
         .
         NMS,ISEAO(NMS)
           (WMH(J(J,1)),J=1,NSEAC)
           .
```

•
•
(WMH(J,NTOB),J=1,NSEAC)

The integer for the ISEAO array identifies the SEA surface type as defined in the documentation for the Program Library of SEA Elements. If the surface is not active in the SEA frequency range then enter a zero for ISEAO(I). If joint acceptance information for the surface has already been calculated (NSDAT(ISUR)≠0) then indicate the surface type on the code card but do not include data cards for the surface. If WMH(1,M) is set to -1, the program will read the remainder of line M then expect the next data card to be a code card.

## Q. Volume Description

The volume description cards define each volume element of the problem and locates the element in the global coordinate space.

Q cards: 1,IVTYP(1), V(1), (IVOLCM(1,I),I=1,MXV)
•
•
•
NV, IVTYP(NV), V(NV), (IVOLCM(VN,I),I=1,MXV)

The first integer on each Q card is the volume number as identified on the isometric drawing of the geometry. The next integer, IVTYP(I), is the volume element reference number from the Program Library of Volume Elements. The volume, V(I), of the element is given next, followed by the NXV nodes that locate the element in the global coordinate space. If MXV is greater than the number of nodes required for any particular volume type, place zeros in the unneeded slots.

## R. Acoustic Constants

The acoustic constants needed to complete the acoustic response description are provided in this data section.

R cards: RO - Density of the fluid
CO - Speed of sound in the fluid
PREF - Reference pressure for calculation of decibels

## S. Acoustic Modal Data

## T. Surface/Volume Relationships

A master surface may or may not be associated with a single subvolume. All other surfaces, the subsurfaces and absorption surfaces are, by definition, adjacent to only one subvolume. The S cards define these relationships.

```
S cards: 1, ISV(1)
            .
            .
            .
         NS, ISV(NS)
```

The first integer on each S card is the surface number as defined on the isometric drawing of the geometry. The second integer is the number of the subvolume that is adjacent to the indicated surface. If the surface is a master surface that extends over two or more subvolumes, enter a zero.

## U. Surface Absorption

The wall impedance is given in the data in terms of the absorption coefficient:

$$\alpha \equiv 8\,\rho c / Z_a$$

where $Z_a$ is the normal surface impedance.

```
U card: 1, IX                                   - code card
        (ZMDATA(1,I),I=1,NTOB)                  - data card
            .
            .
            .
        NS, IX                                  - code card
        (ZMDATA(NS,I),I=1,NTOB)                 - data card
```

The absorption coefficient for each surface and for each frequency band is given. The IX is a code that directs the following read options:

IX = 0 Then the surface is a master surface with subsurfaces. The read skips to the next code card.

IX - 1 Read the data card.

The modal analysis equations use the surface impedance data and along with the acoustic mode shape information to calculate the acoustic modal cavity damping. If the option MOP(3)=1 is selected, the acoustic cavity damping is provided as data. This data is entered in place of the first surface's impedance data.

In the SEA calculations, the program uses the surface absorption coefficient to calculate the power absorbed by the surface. Note that acoustic damping information must be provided for the entire frequency range of interest (frequency band 1 to band NTOB).

For ease of data entry, the wall impedance will be entered in terms of absorption coefficient defined as

$$\alpha \equiv 8\,\rho c/Z_a$$

In the SEA calculations, the program will use this factor directly. In the modal analysis calculations, the program will use the value to calculate the cavity damping factor.

## V. Structural Damping

The internal energy dissipation characteristics, or damping, of each master transmission surface must be given as a function of frequency.

| | | |
|---|---|---|
| V card: | 1, IX | - code card |
| | (ZMDATA(I),I=1,NTOB) | - data card |
| | . | |
| | . | |
| | . | |
| | NMS, IX | - code card |
| | (ZMDATA(I),I=1,NTOB) | - data card |

The first integer of the code card identifies the master surface. The IX is a code that directs the following read options:

IX = O Skip to next code card. The mass storage data is good for this surface.

IX = 1 Read the new data card and replace over the old data in mass storage, if any.

The damping is given in terms of $C/C_c$, or percent of critical damping.

## W. External Sound Pressure Level: Frequency Domain

The reference sound pressure level of the exterior side of each master transmission surface is provided as a function of frequency. The reference SPL is the band-limited perturbation pressure squared at the centroid of the master transmission surface. The level must be expressed in decibels with the reference pressure as given by the "R" input card. A later section will describe the relationship of the pressures at other points on the surface to the reference pressure.

```
W cards: 1, IX                                  - code card
         (SPL(I),I=1,NTOB)                      - data card
            .
            .
            .
         NMS, IX                                - code card
         (SPL(I) I=1,NTOB)                      - data card
```

The IX is a code that directs the following read options:

IX = O Use SPL data already in mass storage for this surface.
IX = 1 Read the new data card and replace over the old data in mass storage.

## X. External Pressure Field Description

Several types of external pressure fields are held in the Program Library of External Pressure Fields. The constants needed to complete the description of the pressure field are provided for each surface.

```
X cards: 1, IPF(1)                              - code card
         (EX(1,I),I=1,NPFC)                     - data card
            .
            .
            .
         NMS, IPF(NMS)                          - code card
         (EX(NMS,I),I=1,NPFC)                   - data card
```

The first integer of each data set is the number of the master transmission surface. This is followed by the pressure field reference number, which defines the type of external pressure field for that master transmission surface. If mass storage data is available, place a zero for the field type and skip to the next code card. The second card in each set gives the constants as defined in the Library of External Pressure Fields. The various external pressure fields over a surface can be random or deterministic and described in the frequency domain. It can also be deterministic and described in the time domain. The type of external pressure field description available for the problem often determines the type of analysis that must be conducted.

### Y. Band Center Frequencies

The center frequencies of each band are given for the range of interest.

Y cards: (CENTF(I),I=1,NTOB)

The frequencies must be given cycles per second. The program converts these more common units to radians per second for calculations.

### Z. Reverberation Time

This section gives access to a specialized routine included in VIN for the calculation of a cavity's reverberation time. Reverberation time is defined as the time required for the diffuse pressure in a room to decay 60 dB after the pressure-generating source is turned off.

Z cards: IC, DT

The integer IC specifies the type of reverberation calculation to be made. Enter a 1, and REVERB calculates the overall reverberation time. Enter a 2, and the band-limited reverberation time is calculated. DT is the time step for either selection.

## 6.11 Executive Commands

Executive commands for program collection, mass storage file management, and data tape management have been combined into several program files. The user may select the program file with the command series desired.

| | |
|---|---|
| @ RUN | - required |
| @ ADD, P XX.DEL | - optional |
| @ ADD, P XX.TAPIN | - optional |

```
@ ADD, P XX.SOURCE      - required
@ ADD, P XX.DATA        - required
@ ADD, P XX.EXTND       - optional
@ ADD, P XX.TAPOT       - optional
@ FIN                   - required
```

Required RUN card is filled out in accordance with site requirements

Optional XX.DEL deletes all cataloged program files with the names, L0, L1, ..., L18.

Optional XX.TAPIN represents a series of tape management commands left to the user since the commands may vary from site to site. These commands should load saved mass storage data back into mass storage. A sample XX.TAPIN run stream is given in appendix D along with the program listing.

Required XX.SOURCE must be one of the following:

XX.SOURC1

1. Recompiles and maps all program routines
2. Starts program execution

XX.SOURC2

1. Assumes program already compiled and starts program execution

Required XX.DATA is the input data file as fully described in section 6.

Optional XX.EXTND extends the cataloged data files L0 through L18 for 8-day retention by system. (Univac 1108 Marshall Space Flight Center, Huntsville, Alabama, system.)

Optional XX.TAPOT represents a series of tape management commands left to the user. The commands should load mass storage files L0 through L18 onto tape in bulk. A sample TAPOT series is given with the program listing in appendix D.

Required FIN card completes the run in batch mode.

### 6.12 <u>Finite Element Data File Preparation</u>

A program, referred to here as FEPRP, is required to load the finite element data file L18. Refer to the description of file L18 in section 6.7 for the required format. Since many finite element programs are available, each with several output options, the user has been left the responsibility for this aspect of the data input preparation. For illustrative purposes, however, an FEPRP routine for NASTRAN output capabilities has been written. The commented routine is given in appendix D.

## Section 7

## APPLICATION TO SPACE SHUTTLE PAYLOAD BAY

The general purpose structural/acoustic interaction model, VIN, was used in the analysis of the Space Shuttle payload bay noise transmission problem. Three specific cases were modeled: the OV-101 jet noise test case with empty payload bay, the OV-101 jet noise test case with Spacelab-2 payload, and the STS-2 launch.

On January 31, 1977, at Edwards Air Force Base, an acoustic test, using two jet aircraft as the acoustic source, was performed on the OV-101. This well-documented test provides the best means available to evaluate the structural and acoustic models developed for the empty Space Shuttle payload bay.

The structural model for the modal analysis calculations is derived from a finite element analysis and some "interpretation" of this data.(15) The structural finite element data spanned the entire modal analysis frequency range (0-80 Hz). The structural model for the statistical energy analysis calculations was adapted from that developed for NASA in reference 3. The SEA model in reference 3 included the bottom, sidewall, bulkhead, and payload bay door structures. Since the payload bay doors dominate the acoustic power input to the cavity, the structural model implemented in VIN assumes the bottom, sidewall and bulkhead to be rigid.

The predictions of the significantly simplified structural model implemented in VIN, the predictions of the model of reference 3, and experimental results are shown in figure 8. The shaded area indicates the band of possible experimental error. More precisely, deviations of predicted levels from the experimental value within the band indicated are not statistically significant at the 1% level of significance.(16) By this criterion, the simplified model used in the calculations by VIN can be considered as valid as the more complex model of reference 3. In essence, the interior noise predictions in the SEA region have a single driver, the payload bay doors. Details of the structural model development are presented in depth in the references.(3, 15) A complete input data file for the test case is given in appendix E. It should be noted that the final door model parameters were chosen to force fit the experimental noise data. Model predictions

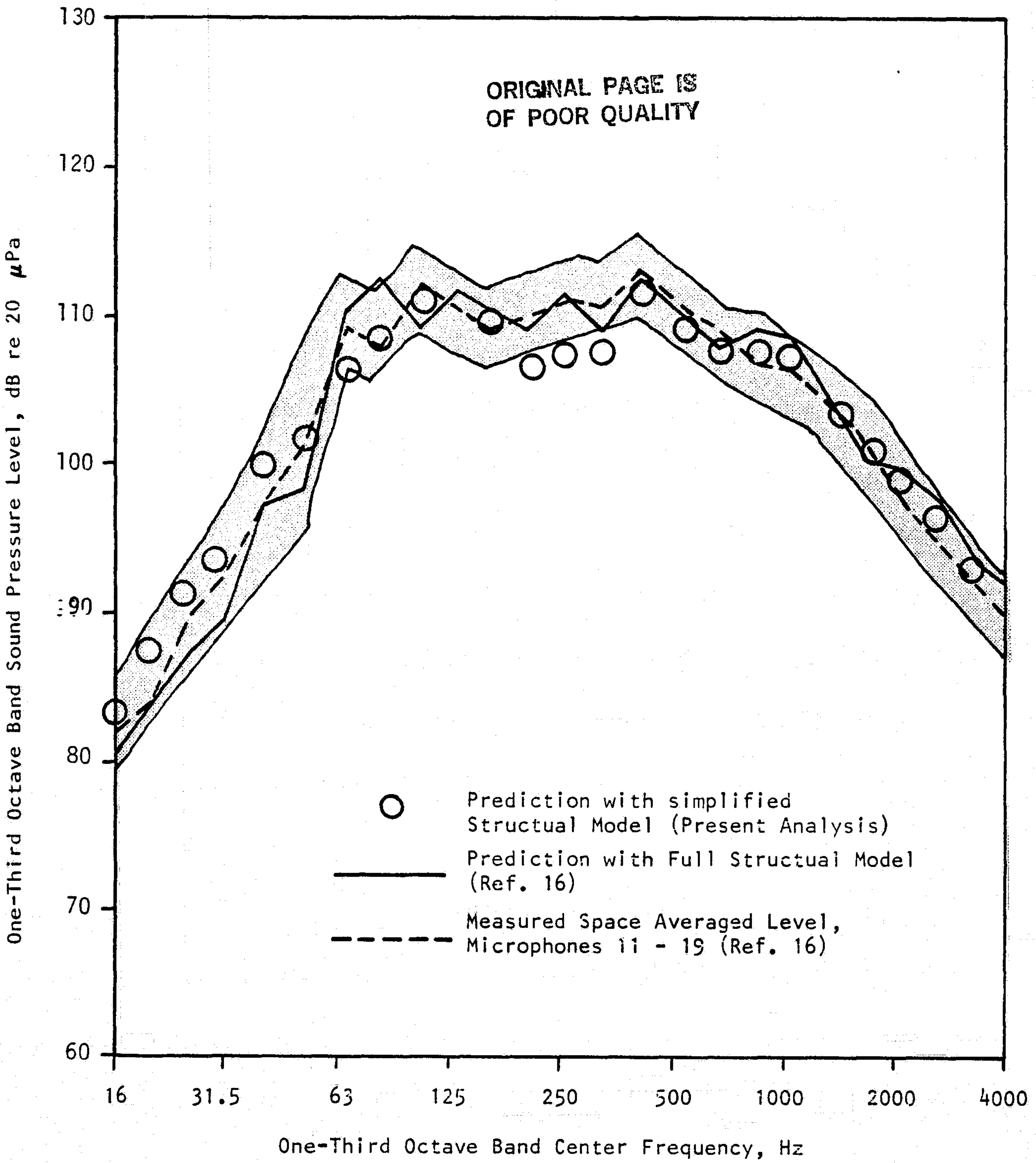

Figure 8. Measured and Predicted Payload Bay Acoustic Levels for OV-101, Tests 2 and 3

based on the initial (pre-experiment) and final (post-experiment) door models are given in figure 9. This particular figure gives clear evidence of the extreme difficulity, if not impossibility, of accurately modeling the high frequency behavior of complex structures without structure-specific test data.

Scale model tests were also conducted for NASA to examine the effects of payloads on the average payload bay noise levels.(17) The Spacelab-2 payload was one of the several configurations tested. Some of the experimental results are shown in figure 10.

The addition of a payload has several effects on the acoustic response characteristics of the payload bay. A payload reduces the volume of the acoustic space; it alters the mode shapes of the volume; and it increases the overall acoustic absorption of the payload bay. A decrease in volume tends to increase the noise level. A change in acoustic mode shapes will generally have little effect on the overall noise level in the volume if the excitation is broadband. It may, however, cause large one-third octave band level changes. An increase in acoustic absorption, of course, tends to decrease the noise level.

The analytical models implemented in VIN are theoretically capable of representing these effects. As a practical matter, however, accurate quantitative predictions were not achieved. In the low frequency regime, the complexity of the acoustic space around the Spacelab-2 payload was beyond the ability of the component mode synthesis to accurately model. In both the modal and SEA calculations, payload absorption estimates had to be made based on data with an order of magnitude of scatter (see reference 17). While it is clear that reasonable numbers could be chosen that would force a fairly good match of the experimental results of figure 10, such an exercise is considered meaningless.

Finally, the interior payload bay noise level for the STS-2 flight launch conditions was predicted. Comparison with flight data is given in figure 11. The structural model remained as previously described except for an increase in payload bay door mass to represent the addition of the thermal protection system. The input data file for this case is listed in appendix E. The predictions are in reasonable agreement with flight data considering the statistical variability associated with the small number of internal and external microphone measurements.

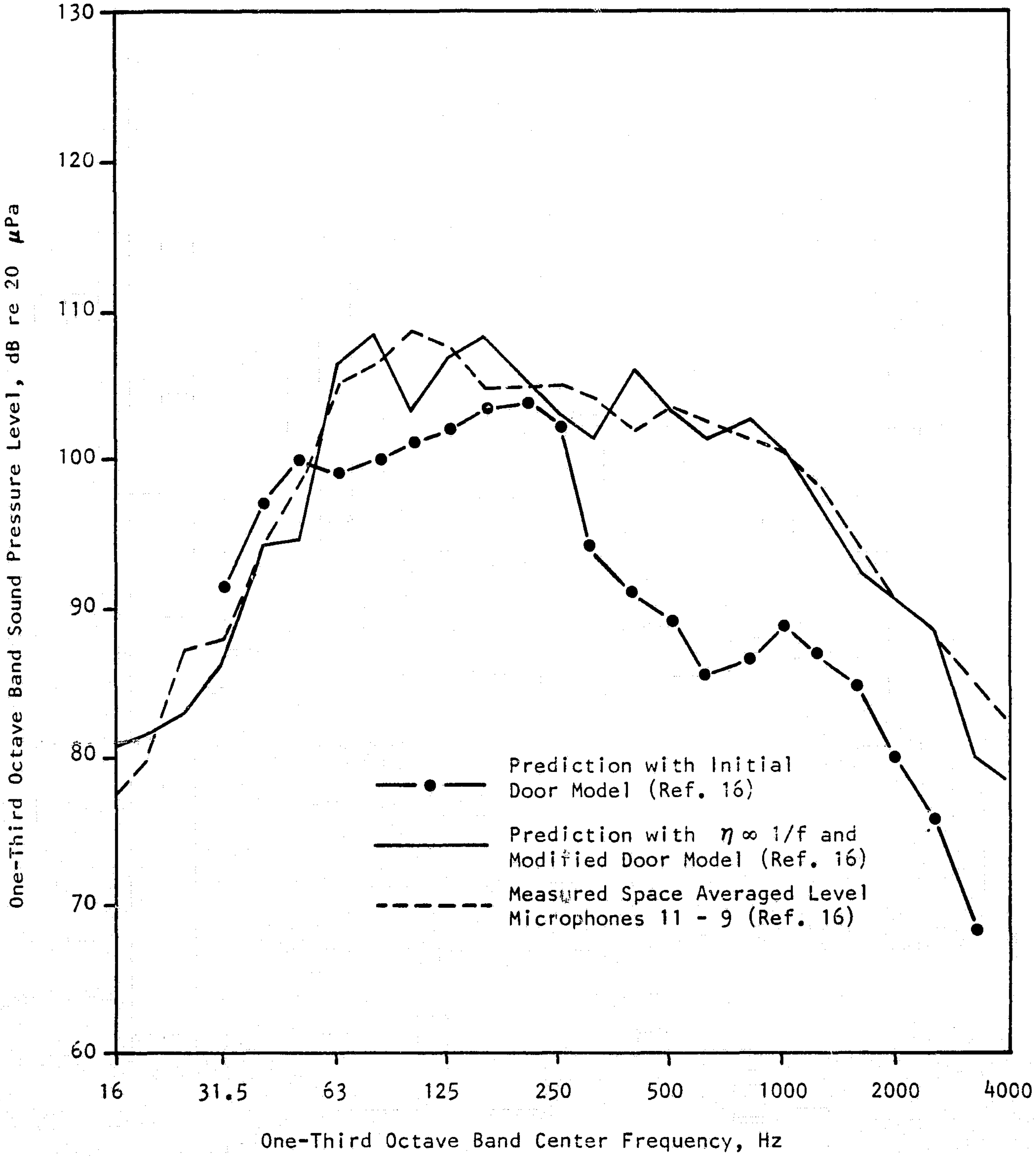

Figure 9. Noise Predictions of Alternate Door Models for OV-101, Test 4

ORIGINAL PAGE IS
OF POOR QUALITY

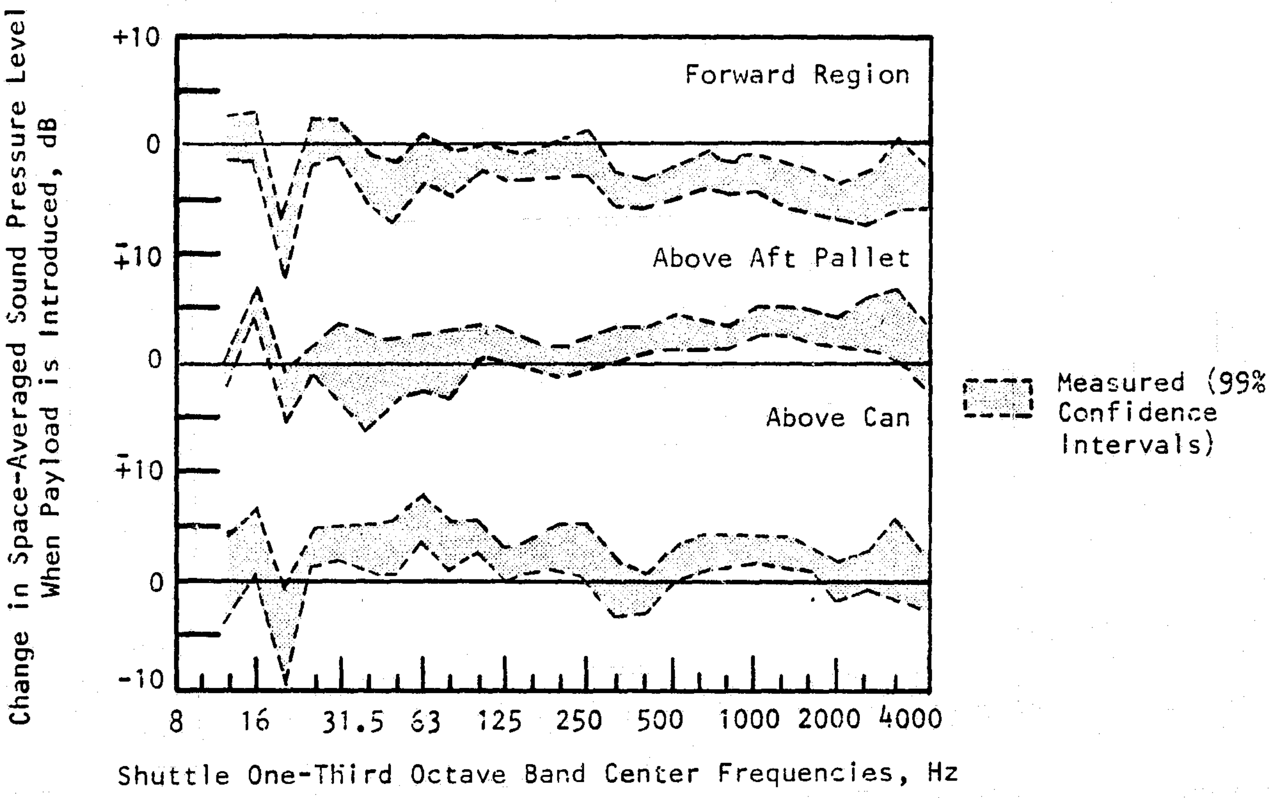

Figure 10. Comparison of Predicted and Measured Changes in Sound Levels, Spacelab-2 Payload Model

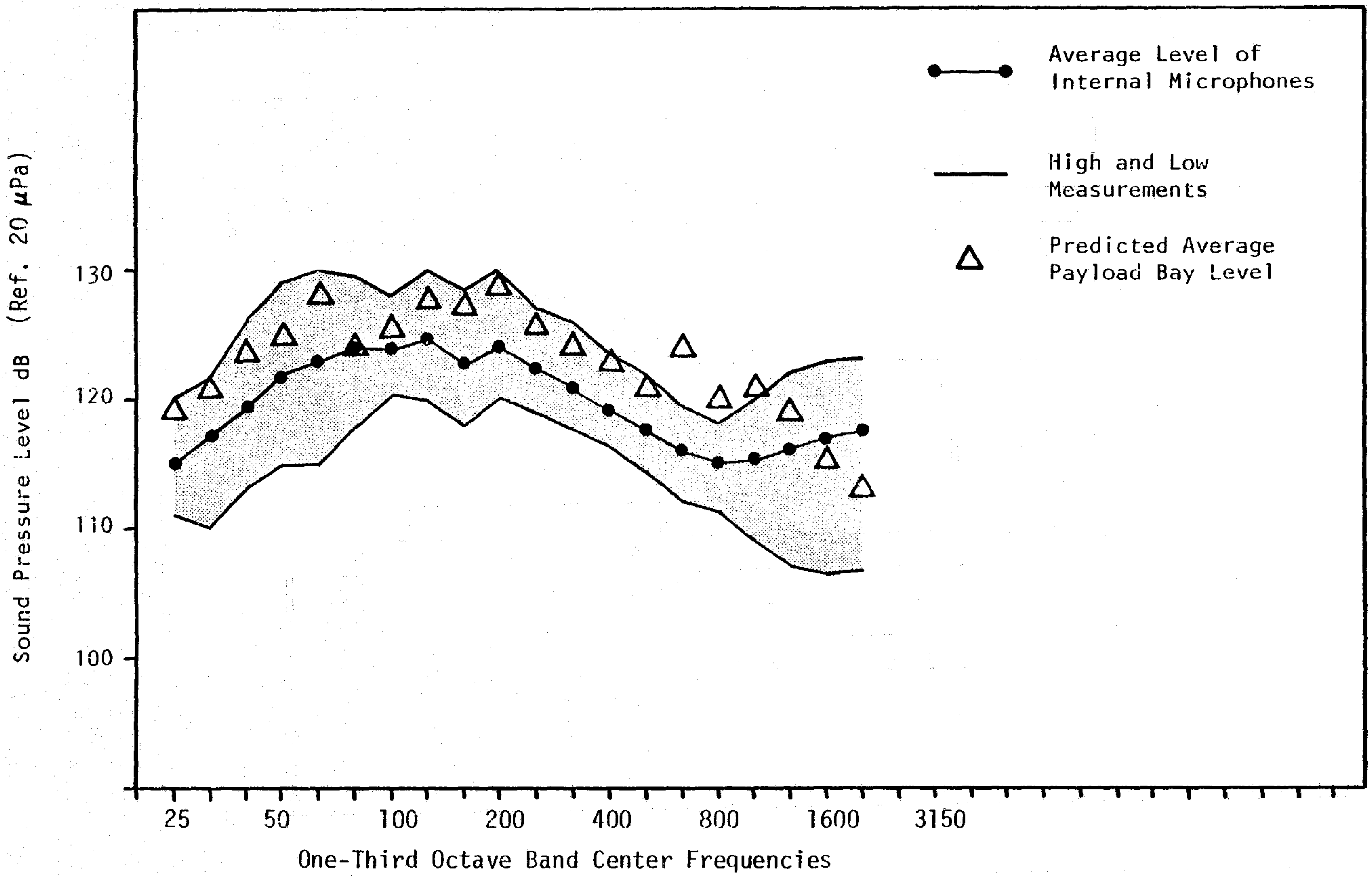

Figure 11. Measured and Predicted Payload Bay Acoustic Levels for STS-2 Liftoff (data 6-12 seconds after ignition)

## Section 8

## SUMMARY

A general purpose computer program was developed for the prediction of vehicle interior noise. This program, named VIN, has both modal and statistical energy analysis capabilities for structural/acoustic interaction analysis.

The analytical models and their computer implementation were verified through simple test cases with well-defined experimental results. The model was also applied in a Space Shuttle payload bay launch acoustics prediction study.

The computer program will process large and small problems with equal efficiency because all arrays are dynamically sized by program input variables at run time. A data base can be built and easily accessed for design studies. The data base significantly reduces the computational costs of such studies by allowing the reuse of the still-valid calculated parameters of previous iterations. Given accurate structural and acoustic response and exterior acoustic field data, the program will yield reliable results. The problem facing the program user will be the determination of the input data. Except for the most simple cases, finite element or experimental structural data will probably be needed for the modal analysis portion of the program. The acoustic component mode synthesis capability of the program makes the determination of the modal analysis range acoustic response less of a problem. For the SEA model, the estimation of the statistical energy analysis parameters, such as the joint acceptance, is required. The joint acceptance includes or is implicitly coupled with structural mode shape information, structural modal density, and external (and internal) pressure distribution estimation. The combined complexity of these factors usually limit the SEA method to rough design trend studies or a post-test semiempirical modeling role. In any case, the general purpose program VIN provides the framework needed to make use of the full capabilities of both the modal analysis and SEA methods for vehicle interior noise predictions.

## Section 9

## REFERENCES

1. Dowell, E. H. Master plan for prediction of vehicle interior noise. Princeton Univ., AIAA 5th Aeroacoust. Conf., Seattle, Wash., Mar. 12-14, 1979.

2. Dowell, E. H., G. F. Gorman, and D. A. Smith. Acoustoelasticity: General Theory, Acoustic Natural Modes and Forced Response to Sinusoidal Excitation, Including Comparisons with Experiment. J. Sound Vib., v. 52, 1977, pp. 519-542.

3. Dowell, E. H. Reverberation time, absorption, and impedance. J. Acoust. Soc. Am., 64(1), July 1978, pp. 181-191.

4. Pope, L. D., and J. F. Wilby. Space Shuttle Payload Bay Acoustics Prediction Study: Volume II, Analytical Model. NASA CR 159956, March 1980.

5. Trudell, R. W., and L. I. Yard. Statistical Energy Analysis Computer Program User's Guide. MDC G9915, Nov. 1981.

6. Morse, P. M., and K. U. Ingard. Theoretical Acoustics, McGraw-Hill, Inc., 1968.

7. Lyon, R. H., G. Maidanik. Power flow between linearly coupled oscillators. J. Acoust. Soc. Am., 34, 5, 1962, pp. 623-639.

8. Pretlove, A. J. Free vibration of a rectangular panel backed by a closed rectangular cavity. J. Sound Vib., 2(3), 1965, pp. 197-209.

9. Fahy, F. J. Response of a cylinder to random sound in the contained fluid. J. Sound Vib., 13, 2, 1970, pp. 171-194.

10. Wilby, J. F. The response of simple panels to turbulent boundary layer excitation. AFFDL-TR-67-70, 1967.

11. Peyt, M., G. H. Koopmann, and R. J. Pinnington. The acoustic modes of a rectangular cavity containing a rigid, incomplet partition. J. Sound Vib., 53(1), 1977, pp. 71-82.

12. Mixson, J. S., C. K. Barton, and R. Varaitis. Investigation of interior noise in a twin-engine light aircraft. J. Aircraft, v. 15, 1978, pp. 227-233.

13. White, P. H. Sound transmission through a finite, closed, cylinderical shell. J. Acoust. Soc. Am., v. 40, 1988, pp. 1124-1130.

14. Piersol, A. G., and P. E. Rentz. Prediction of Space Shuttle Orbiter Payload Bay Launch Acoustic Levels Based on OV101 Acoustic Tests. Bolt, Beranek and Newman, Inc., Report 3424, April 1977.

15. Pope, L. D., and J. F. Wilby. Space Shuttle Payload Bay Acoustics Prediction Study: Volume II, Analytical Model. NASA CR 158856, Mar. 1980, pp. 122-134.

16. Piersol, A. G., et al. Space Shuttle Payload Bay Acoustics Prediction Study: Volume IV, Verification of Analytical Model (Without Payload). NASA Report CR 159956, Mar. 1980.

17. _____. Space Shuttle Payload Bay Acoustics Prediction Study: Volume V, Verification of Analytical Model (With Payload) and Overview of Study. NASA CR 159956.

# APPENDIX A

# PROGRAM LIBRARY OF MODAL ELEMENTS

## PART I. VOLUME ELEMENTS

### 1a. Volume Type 1: Parallelepiped

### 1b. Shape

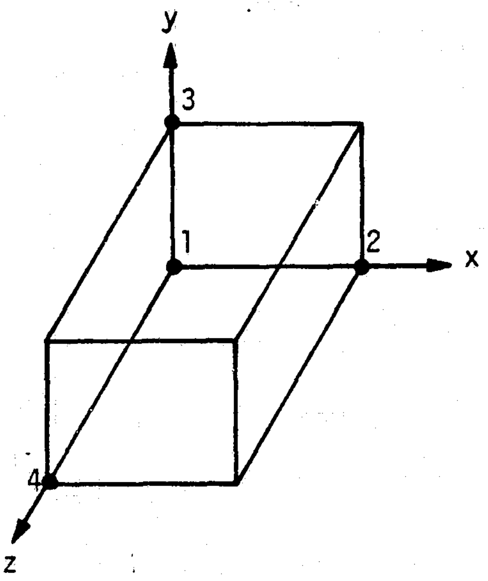

### 1c. Natural Frequency Equation

$$\omega_{mns} = C_o \pi \left( \left(\frac{m}{xL}\right)^2 + \left(\frac{n}{yL}\right)^2 + \left(\frac{s}{zL}\right)^2 \right)^{1/2}$$

where $C_o$ - speed of sound in fluid

m, n, s - integer indexes for x-, y-, and z-directions, respectively

xL - length of parallelepiped in x-direction

yL - length of parallelepiped in y-direction

zL - length of parallelepiped in z-direction

### 1d. Mode Shape Equation

$$F_{mns}(x,y,z) = \left( \cos \frac{m\pi x}{XL} \; \cos \frac{n\pi y}{YL} \; \cos \frac{s\pi z}{ZL} \right) \Big/ D_{mns}$$

where $D_{mns} = \left( \frac{\mathcal{E}_m \mathcal{E}_n \mathcal{E}_s}{8} \right)^{1/2}$

$\mathcal{E}_m$ = 1 if m   1

= 2 if m = 0

$\mathcal{E}_n$ = 1 if n   1

= 2 if n = 0

$\mathcal{E}_s$ = 1 if s   1

= 2 if s = 0

With $D_{mns}$ calculated in this manner, the acoustic generalized mass

$$M_{mns} = \frac{1}{V} \int_V F_n^2(x,y,z)\, dV = 1.0$$

### 1e. Summary of Program Variables Associated with Volume Element Description

NVOL - assigned volume number
OVTYP(NVOL) - volume type
(VNODC(1,J,NVOL),J=1,3) - x, y, z coordinates of node 1
(VNODC(2,J,NVOL),J=1,3) - x, y, z coordinates of node 2
(VNODC(3,J,NVOL),J=1,3) - x, y, z coordinates of node 3
(VNODC(4,J,NVOL),J=1,3) - x, y, z coordinates of node 4
$C_o$ - speed of sound in contained fluid
XL,YL,ZL - primary lengths of parallelopiped calculated from the node points
WN(1,NWN,NVOL) - natural frequency of volume mode NWN
WN(2,NWN,NVOL) - modal index m of volume mode

WN(3,NWN,NVOL) - modal index n of volume mode NWN
WN(4,NWN,NVOL) - modal index s of volume mode NWN

## 2a. Volume Type 2: Circular Cylinder

## 2b. Shape

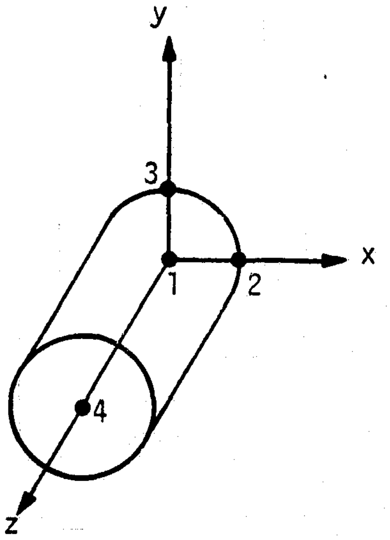

## 2c. Natural Frequency Equation

$$\omega_{mns} = C_o \left( \left( \frac{s\pi}{2L} \right)^2 + K_{nm}^2 \right)^{1/2}$$

where $K_{nm}$ is calculated by the solution to the equation:

$$J_n'(K_{nm} \cdot a) = 0$$

and $J_n(x)$ - Bessel function of the first kind

$a$ - radius of cylinder

$m, n, s$ - integer mode numbers of the $r$-, $\theta$-, $z$-directions, respectively

$zL$ - length of cylinder along z-axis

$C_o$ - speed of sound in fluid in the volume

$K_{nm}$ - allowed frequency constant

## 2d. **Mode Shape Equation**

$$r = (x^2 + y^2)^{1/2}$$

$$\theta = \cos^{-1}(x/r)$$

$$z = z$$

$$K_{nm} = \left(\omega_{mns}^2/C_o^2 - (s\pi/zL)^2\right)^{1/2}$$

MODE SHAPE,

$$F_{mns}(r,\theta,z) = \cos\left(\frac{s\pi z}{zL}\right) \cos(n\theta)\, J_n(K_{nm} \cdot r) \Big/ D_{mns}$$

WHERE $D_{mns}$ IS CHOSEN SUCH THAT THE GENERALIZED MASS

$$\frac{1}{V} \int_V F_{mns}^2(r,\theta,z)\, dV = 1.0$$

$$D_{mns} = \left\{ \left( \frac{\mathcal{E}_s \mathcal{E}_n}{4} \right) \left( J_n'^2(K_{nm} a) + \left( 1 - \frac{n^2}{K_{nm}^2 a^2} \right) J_n^2(K_{nm} a) \right) \right\}^{1/2}$$

and $J'_n(x)$ = first derivative of the Bessel function $J_n(x)$

$\mathcal{E}_s$ = 1 if s  0

= 2 if s = 0

$\mathcal{E}_n$ = 1 if n  0

= 2 if n = 0

### 2e. Summary of Program Variables Associated With the Volume Element Description

See section e of volume element 1.

### 3a. Volume Type 3: Concentric Circular Cylinders

### 3b. Shape

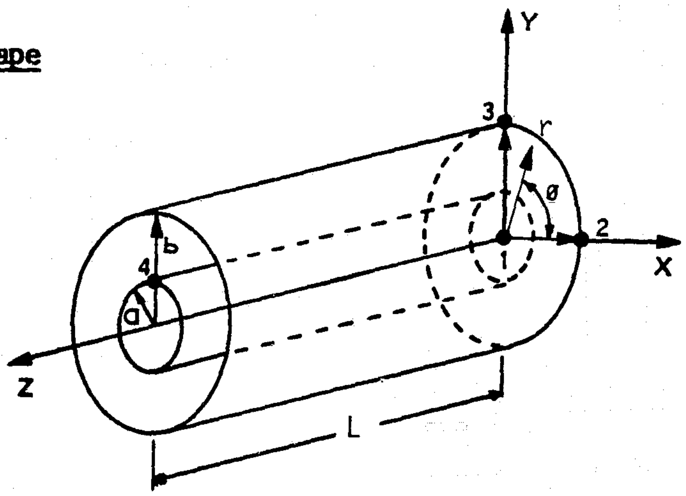

### 3c. Natural Frequency Equation

$$\omega_{mns} = C_0 \left( \left( \frac{s\pi}{2L} \right)^2 + K_{nm}^2 \right)^{1/2}$$

$C_o$ - speed of sound in the fluid in the volume

zL - length of concentric cylinder

mns - modal indexes for the r-,$\theta$-, z-directions respectively

a - inside radius

b - outside radius

r - radius to some point in the volume

$K_{nm}$ - allowed frequency constant

and $K_{nm}$ is the roots of the equation

$$Q_n'(K_{nm}a) = 0$$

with

$$Q_n(K_{nm}a) = J_n(K_{nm}a) - \frac{J_n'(K_{nm}b)}{Y_n'(K_{nm}b)} Y_n(K_{nm}a)$$

$J_n(x)$ - Bessel function of the first kind

$Y_n(x)$ - Bessel function of the second kind

3d. **Mode Shape Equation**

$$r = (x^2+y^2)^{1/2}$$

$$\theta = \cos^{-1}(x/r)$$

$$z = z$$

$$K_{nm} = \left(\omega_{mns}^2/C_o^2 - (s\pi/zL)^2\right)^{1/2}$$

$$F_{mns}(r,\theta,z) = \cos\left(\frac{s\pi}{zL}\right)\cos(n\theta)\; Q_n(K_{nm}r) \Big/ D_{mns}$$

where

$$Q_n(K_{nm} r) = J_n(K_{nm} r) - \frac{J_n'(K_{nm} b)}{Y_n'(K_{nm} b)} Y_n(K_{nm} r)$$

and $D_{mns}$ is chosen such that the generalized mass

$$M_{mns} = \frac{1}{V} \int_V F_{mns}^2 (r, \theta, z)\, dV = 1.0$$

$$D_{mns} = \left\{ \left( \frac{\mathcal{E}_s \mathcal{E}_n}{4} \right) \left( \left( b^2 - \frac{n^2}{K_{nm}^2} \right) Q_{nm}^2 (K_{nm} b) - \left( a^2 - \frac{n^2}{K_{nm}^2} \right) Q_{nm}^2 (K_{nm} a) \right) \right\}^{1/2}$$

where $\mathcal{E}_s$ = 1 if s 1

= 2 if s = 0

$\mathcal{E}_n$ = 1 if s 1

= 2 if s = 0

### 3e. Summary of Program Variables Associated With the Volume Element Description

See section e of volume element 1.

## 4a. Volume Type 4: Deformed Rectangular Parallelepiped

## 4b. Shape

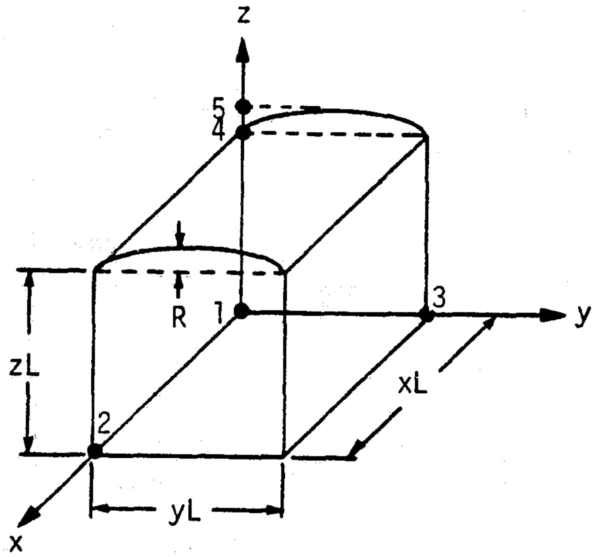

## 4c. Natural Frequency

$$\omega_{mns} = C_0\, \overset{\circ}{\omega}_{mns} \Big(1 + 2\, \varepsilon\, V_{ns} \Big( \Big( \left(\frac{n\pi}{yL}\right)^2 + \left(\frac{Z\pi}{ZL}\right)^2 \Big) \Big/ \overset{\circ}{\omega}{}^{2}_{mns} \Big)^{1/2}$$

WHERE

$$\overset{\circ}{\omega}_{mns} = \left( \left(\frac{m\pi}{xL}\right)^2 + \left(\frac{n\pi}{yL}\right)^2 + \left(\frac{s\pi}{zL}\right)^2 \right)^{1/2}$$

$$\varepsilon = R/zL$$

FOR $n, s > 0$

$$V_{ns} = \left( \frac{-2 s^2 \pi^2}{zL^2} \left( \frac{1}{3} - \frac{1}{n^2 \pi^2} \right) - \frac{4}{yL^2} \right) \Big/ \left( \left(\frac{n\pi}{yL}\right)^2 + \left(\frac{s\pi}{zL}\right)^2 \right)$$

For $n=0,\ s>0$

$$\gamma_{sn} = \left( \frac{-2 s^2 \pi^2}{ZL^2} \left(\frac{2}{3}\right) - \frac{4}{YL^2} \right) \Big/ \left( \frac{s\pi}{ZL} \right)^2$$

For $n=0,\ s=0$

$$\gamma_{sn} = 0$$

$C_o$ - speed of sound of the fluid in the parallelepiped.

### 4d. Mode Shape Equations

The deformed parallelepiped's mode shape will be approximated by that of a simple parallelepiped

$$F_{mns}(x,y,z) = \left( \cos \frac{m\pi x}{Lx} \ \cos \frac{n\pi y}{Ly} \ \cos \frac{s\pi z}{Lz} \right) \Big/ D_{mns}$$

where

$$D_{mns} = \left( \frac{\mathcal{E}_m \mathcal{E}_n \mathcal{E}_s}{8} \right)^{1/2}$$

and $\mathcal{E}_m$ = 1; m 1
= 2; m = 0

$\mathcal{E}_n$ = 1; n 1
= 2; n = 0

$\mathcal{E}_s$ = 1; s 1
= 2; s = 0

$D_{mns}$ calculated in this manner forces the acoustic generalized mass:

$$M_{mns} = \frac{1}{V} \int_V F_n^2(x,y,z)\, dv = 1.0$$

### 4e. Summary of Program Variables Associated With the Volume Element Description

See section 3 of volume element 1.

## PART II. OPENING ELEMENTS

### 1a. Opening Type 1: Rectangle

### 1b. Shape

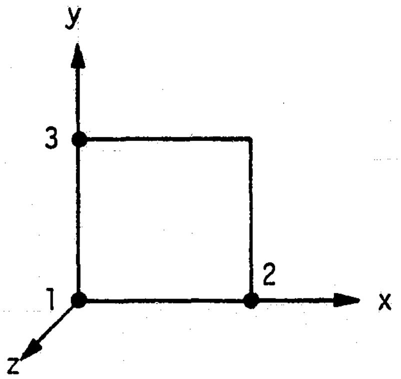

### 1c. Mode Shape Equation

$$\text{FACTOR FOR MODE ORDERING} = \left(\left(\frac{p}{xs}\right)^2 + \left(\frac{q}{ys}\right)^2\right)$$

$$\psi_{pq}(x,y) = \cos\frac{p\pi x}{xs} \quad \cos\frac{q\pi y}{ys}$$

where xs - length of panel in x-direction
ys - length of panel in y-direction
p, q - modal index in the x- and y-directions respectively

## 1d. Summary of Program Arrays Associated With the Opening Description

IOTYP(NOO) - opening element type declarations
ONODC(MXS,3,NOO) - array holding node points
WMO(1,MWM,ISUR) - frequency factor of opening mode MWM
WMO(2,MWM,ISUR) - modal index p of opening mode MWM
WMO(3,MWM,ISUR) - modal index q of opening mode MWM

## 2a. Opening Type 2: Circle

## 2b. Shape

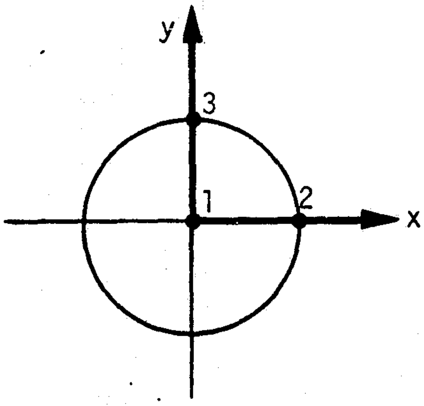

## 2c. Mode Shape Equation

FACTOR FOR MODE ORDERING = $K_{qp}$

$$\psi_{pq}(r,\theta) = \cos(q\theta)\, J_q(K_{qp}\, r)$$

a - radius of opening
$J_q(x)$ - Bessel function of the first kind
q, p - mode numbers
$K_{qp}$ - allowed frequency constant such that

$$J_q(K_{qp}\, a) = 0$$

WHEN $\rho$ IS LARGE, $k_{\rho\gamma} = (\rho + \gamma/2 - 1/4)\ (\pi/a)$

### 2d. Summary of Program Variables Associated With Opening Element Description

See section d of opening element type 1.

### 3a. Opening Type 3: Concentric Circle

### 3b. Shape

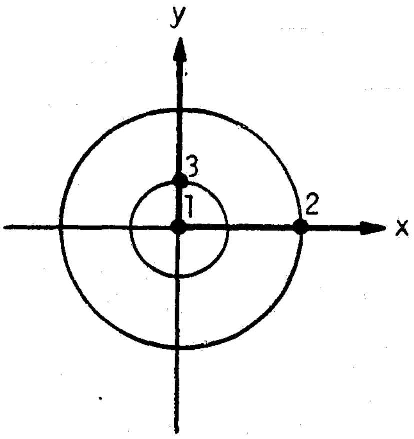

### 3c. Mode Shape Equation

FACTOR FOR MODE ORDERING = $k_{\gamma\rho}$

$$\psi_{\rho\gamma}(r,\theta) = \cos(\gamma\theta)\ Q_\gamma(k_{\gamma\rho}\, r)$$

where

$$Q_\gamma(k_{\gamma\rho}\, r) = J_\gamma(k_{\gamma\rho}\, r) - \frac{J'_\gamma(k_{\gamma\rho} b)}{Y'_\gamma(k_{\gamma\rho} b)}\, Y_\gamma(k_{\gamma\rho}\, r)$$

p, q - modal indexes for r- and $\theta$-directions respectively

a - inside radius of opening

b - outside radius of opening

$J_q(x)$ - Bessel function of the first kind

$Y_q(x)$ - Bessel function of the second kind

$J'_q(x)$ - first derivative of the Bessel function of the first kind

$Y'_q(x)$ - first derivative of the Bessel function of the second kind

$K_{qp}$ - allowed frequency factor such that

$$Q'_q(K_{qp}\, a) = 0.0$$

and $Q'_q(x)$ is the derivative of $Q_q(x)$.

### 3d. Summary of Program Variables Associated With Opening Element Description

See section d of opening type 1.

## PART III. ANALYTIC OPENING/VOLUME COUPLING, $L_{nm}$

### 1. Opening Type 1/Volume Type 1: Rectangle/Parallelepiped

This analytic solution assumes the opening lies on a surface of the volume with the sides of the opening square with the surface of the parallelepiped sides.

$$L_{nm} = \frac{1}{A}\int_0^{ys}\int_0^{xs} F_n(x',y',z')\,\psi_m(x,y)\,dx\,dy$$

Let A - area of opening
x' - x - a
y' - y - b
z' - z - c
n - represents the three acoustic indexes
m - represents the two opening indexes
a, b, c - coordinate transformation constants
xs, ys - length of the sides of the opening
xv, yv, zv - length of the sides of the parallelepiped (Note that xs corresponds in direction to xv and ys to yv.)

$$F_n(x',y',z') = \cos\frac{i\pi x}{XV}\ \cos\frac{j\pi y}{YV}\ \cos\frac{k\pi z}{ZV}$$

$$\psi_m(x,y) = \cos\frac{p\pi x}{XS}\ \cos\frac{q\pi y}{YS}$$

HENCE

$$L_{nm} = \frac{1}{A}\cos\frac{k\pi(z-c)}{ZV}\int_0^{XS}\cos\frac{i\pi(x-a)}{XV}\cos\frac{p\pi x}{XS}\,dx$$

$$\cdot\int_0^{YS}\cos\frac{j\pi(y-b)}{YV}\cos\frac{q\pi y}{YS}\,dy$$

$$= \frac{1}{A}\cos\frac{k\pi(z-c)}{ZV}\cdot XI\cdot YI$$

WHERE

IF $XV = XS$ AND $i+p=0$ ; $XI = XS$

IF $XV = XS$ AND $i-p \neq 0$ ; $XI = 0$

IF $XV = XS$ AND $i-p=0$ ; $XI = XS/2$

IF $XV \neq XS$ AND $i+p=0$ ; $XI = XS$

IF $XV \neq XS$ AND $a=0$ AND $i/XV = p/XS$ ; $XI = XS/2$

IF $XV \neq XS$ AND $a \neq 0$ AND $i/XV = p/XS$ ;

$XI = \cos(i\pi a/XV)\cdot XS/2$

$$\text{IF } XV \neq XS \text{ AND } a = 0 \text{ AND } i/XV \neq P/XS \;;$$

$$XI = \sin(ALPHA)\,(V1+V2)\,(-1)^{(P+2)}\,(1/2)$$

$$\text{IF } XV \neq XS \text{ AND } a \neq 0 \text{ AND } i/XV \neq P/XS \;;$$

$$XI = (\sin(GAMMA)\,(-1)^{(P+2)} - \sin(i\pi a/XV))\,/\,2$$

$$\cdot\,((1/\pi)/(I/XV + P/XS) + (1/\pi)/(i/XV - P/XS))$$

WHERE

$$ALPHA = i\pi\, XS/XV$$

$$V1 = 1/(\pi i/XV + \pi p/XS)$$

$$V2 = 1/(\pi i/XV - \pi p/XS)$$

$$GAMMA = i\pi\, XS/XV + i\pi a/XV$$

The solution for YI is analogous.

The subroutine ALIGN matches the structural and acoustic lengths and modal indexes for the analytical solution (see source code).

## 2. Opening Type 2/Volume Type 2: Circle/Circular Cylinder

This analytic solution assumes the opening is at an end of the circular cylinder.

$$L_{nm} = \frac{1}{A}\int_0^{2\pi}\int_0^{a} F_n(r,\theta,z')\,\Psi_m(r,\theta,z)\,r\,dr\,d\theta$$

Let A - area of opening

$r,\theta,z$ - opening coordinate system

m - represents two opening indexes; p, q

n - represents three volume indexes; ijk

zv - length of the circular cylinder

z' - constant z location in volume

a - radius of circle opening

$$F_n(r,\theta,z') = \cos\frac{k\pi z'}{ZV}\cos j\theta \; J_j(K_{ji}\, r)$$

$$\psi_m(r,\theta) = \cos g\theta \; J_g(K_{gp}\, r)$$

$$L_{nm} = \frac{1}{A}\cos\frac{k\pi z'}{ZV}\int_0^a J_j(K_{ji}\, r)\, J_g(K_{gp}\, r)\, r\, dr$$

$$\cdot \int_0^{2\pi}\cos j\theta \cos g\theta \, d\theta$$

with p,q - opening modal indexes

i,j,k - volume modal indexes

$K_{ji}$ - modal constant for circular cylinder (see volume type 2)

$K_{pq}$ - modal constant for circular opening (see opening type 2)

$$L_{nm} = \frac{1}{A}\cos\frac{k\pi z'}{ZV}\cdot RI \cdot TI$$

WHERE

$$RI = \int_0^a J_j(K_{ji}\, r)\, J_g(K_{gp}\, r)\, r\, dr$$

$$TI = \int_0^{2\pi}\cos j\theta \cos g\theta \, d\theta$$

IF $j = g$;

$$RI = \frac{a}{(K_{ji}^2 - K_{gp}^2)} \left( K_{gp} J_g(K_{gp} a) J_g'(K_{gp} a) - K_{ji} J_j(K_{ji} a) \cdot J_j'(K_{ji} a) \right)$$

IF $j = g$ AND $j \neq 0$; $TI = \pi$

IF $|j - g| > 0$; $TI = 0$

IF $j = g$ AND $j = 0$; $TI = 2\pi$

### 3. Opening Type 3/Volume Type 2: Annulous of Concentric Circle/Circular Cylinder

This analytic solution assumes the opening is at an end of the circular cylinder and that the $r, \theta$, and z coordinates of both elements are aligned.

$$L_{nm} = \frac{1}{A} \int_0^{2\pi} \int_a^b F_n(r, \theta, z') \psi_m(r, \theta) \, r \, dr \, d\theta$$

Let A - area of the opening

$r, \theta, z$ - opening coordinate system

m - represents the two opening indexes; p, q corresponding to the r- and $\theta$ - directions

n - represents the three volume indexes; i, j, k corresponding to the r-, $\theta$-, and z-directions

zv - length of circular cylinder

z' - constant z locaton in the volume's coordinate system of the opening

a - inside radius of opening

b - outside radius of opening

$$F_n(r,\theta,z') = \cos\left(\frac{K\pi z'}{ZV}\right) \cos(j\theta)\; J_j(K_{ji} r)$$

$$\psi_m(r,\theta) = \cos q\theta \; Q_q(K_{qp} r)$$

$Q_q(x)$ - see opening type 3

$K_{ij}$ - circular cylinder modal constants (see volume type 1)

$K_{qp}$ - annulous of concentric circle modal constants (see opening type 3)

$$L_{nm} = \frac{1}{A} \cos \frac{K\pi Z'}{ZV} \cdot RI \cdot TI$$

WHERE

$$RI = \int_a^b J_j(K_{ji} r)\, Q_q(K_{qp} r)\, r\, dr$$

EXPAND ON $RI$,

$$RI = \int_a^b J_q(K_{qp} r)\, J_j(K_{ji} r)\, r\, dr - \frac{J_q'(K_{qp} b)}{Y_q'(K_{qp} b)} \int_a^b Y_q(K_{qp} r)\, J_j(K_{ji} r)\, r\, dr$$

AND

$$TI = \int_0^{2\pi} \cos(j\theta)\, \cos(q\theta)\, d\theta$$

IF $j = g$ AND $j \neq 0$;

$$RI = VI(b) - VI(a)$$
$$TI = \pi$$

IF $|j - g| > 0$;

$$RI = 1.0$$
$$TI = 0$$

IF $j = g$ AND $j = 0$

$$RI = VI(b) - VI(a)$$
$$TI = 2\pi$$

WHERE

$$VI(r) = \frac{r}{(K_{ji}^2 - K_{gp}^2)} \left( K_{gp} J_j(K_{ji} r) J_j'(K_{gp} r) - K_{ji} J_j(K_{gp} r) J_j'(K_{ji} r) \right) - \frac{J_j'(K_{gp} b)}{Y_j'(K_{gp} b)} \frac{r}{(K_{ji}^2 - K_{gp}^2)} \cdot \left( K_{gp} J_j(K_{ji} r) Y_j'(K_{gp} r) - K_{ji} Y_j(K_{gp} r) J_j'(K_{ji} r) \right)$$

## 4. Opening Type 3/Volume Type 3: Annulous of Concentric Circle/Annulous of Concentric Circular Cylinder

This analytic solution assumes the opening is at the end of the concentric circular cylinder annulous and that the r, $\theta$, and z coordinates of both elements are aligned.

$$L_{nm} = \frac{1}{A} \int_0^{2\pi} \int_a^b F_n(r, \theta, z') \psi_m(r, \theta) \, r \, dr \, d\theta$$

ORIGINAL PAGE IS
OF POOR QUALITY

Let A - area of opening

a - inside radius of opening

b - outside radius of opening

r, Θ, z - opening coordinate system

m - represents two opening indexes; p, q

n - represents three volume indexes; i, j, k

z' - constant z location, in the volume's coordinate system, of the opening

zv - length of concentric circular cylinder

B - outside radius of concentric circular cylinder

$$F_n(r,\theta,z') = \cos\frac{k\pi z'}{zv}\cos j\theta\, Q_j(K_{ji}\, r)$$

$$\psi_m(r,\theta) = \cos q\theta\, Q_q(K_{qp}\, r)$$

$Q_j(x)$ - see volume type 3

$Q_q(x)$ - see opening type 3

$K_{ij}$ - concentric circular cylinder modal constant; see volume type 3

$K_{qp}$ - concentric circle modal constants; see opening type 3

$$L_{nm} = \frac{1}{A}\cos\frac{k\pi z'}{zv}\cdot RI\cdot TI$$

where

$$RI = \int_a^b Q_j(K_{ji}\, r)\, Q_q(K_{qp}\, r)\, r\, dr$$

$$TI = \int_0^{2\pi}\cos j\theta\,\cos q\theta\, d\theta$$

EXPANDING ON RI,

$$RI = \int_a^b \left\{ J_j(k_{ji} r)\, J_g(k_{gp} r) - J_j(k_{ji} r) \frac{J_g'(k_{gp} b)}{Y_g'(k_{gp} b)} Y_g(k_{gp} r) \right.$$

$$- J_g(k_{gp} r) \frac{J_j'(k_{ji} B)}{Y_j'(k_{ji} B)} Y_j(k_{ji} r)$$

$$\left. + Y_j(k_{ji} r)\, Y_g(k_{gp} r) \frac{J_j'(k_{ji} B)}{Y_j'(k_{ji} B)} \frac{J_g'(k_{gp} b)}{Y_g'(k_{gp} b)} \right\} r\, dr$$

DEFINE

$$VJ(\alpha, \beta, \ell, r) = \int J_\ell(\alpha r)\, J_\ell(\beta r)\, r\, dr$$

$$= \frac{r}{(\beta^2 - \alpha^2)} \left( \alpha J_\ell(\beta r) J_\ell'(\alpha r) - \beta J_\ell(\alpha r) J_\ell'(\beta r) \right)$$

$$VY(\alpha, \beta, \ell, r) = \int Y_\ell(\alpha r)\, Y_\ell(\beta r)\, r\, dr$$

$$= \frac{r}{(\beta^2 - \alpha^2)} \left( \alpha J_\ell(\beta r) J_\ell'(\alpha r) - \beta J_\ell(\alpha r) J_\ell'(\beta r) \right)$$

$$VJY(\alpha, \beta, \ell, r) = \int J_\ell(\alpha r)\, Y_\ell(\beta r)\, r\, dr$$

$$= \frac{r}{(\beta^2 - \alpha^2)} \left( \alpha Y_\ell(\beta r) J_\ell'(\alpha r) - \beta J_\ell(\alpha r) Y_\ell'(\beta r) \right)$$

ORIGINAL PAGE IS
OF POOR QUALITY

IF $j = g$ AND $j \neq 0$ ;

$$RI = VJ(K_{ji}, K_{gp}, j, b) - VJ(K_{ji}, K_{gp}, j, a)$$

$$- \frac{J_g'(K_{gp} b)}{Y_g'(K_{gp} b)} \left( VJY(K_{ji}, K_{gp}, j, b) - VJY(K_{ji}, K_{gp}, j, a) \right)$$

$$- \frac{J_j'(K_{ji} B)}{Y_j'(K_{ji} B)} \left( VJY(K_{gp}, K_{ji}, j, b) - VJY(K_{gp}, K_{ji}, j, a) \right)$$

$$+ \frac{J_j'(K_{ji} B)}{Y_j'(K_{ji} B)} \frac{J_g'(K_{gp} b)}{Y_g'(K_{gp} b)} \left( VY(K_{ji}, K_{gp}, j, b) - VY(K_{ji}, K_{gp}, j, a) \right)$$

$TI = \pi$

IF $|j-g| > 0$ ;

$TI = 0$

# PART IV. STRUCTURAL ELEMENTS: MODAL ANALYSIS

## 1a. Structure Type 1: Rectangular Shape With Fourier Series Mode Descriptions

## 1b. Shape

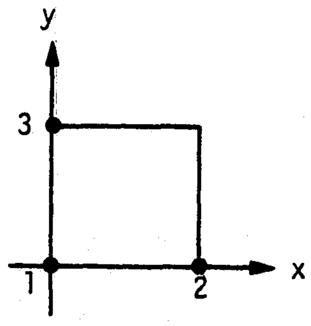

## 1c. Surface Equations

Z = 0.0 - Surface equation

G = 1.0 - Geometry correction factor

RJ = 1.0 - Jacobian

## 1d. Natural Frequency Equation and Structural Constants

Natural frequencies provided as data.

## 1e. Mode Shape

$$\varphi_m(X,Y) = \sum_{p}^{MX} \sum_{q}^{NX} {}_m B_{pq} \sin \frac{p\pi X}{XL} \sin \frac{q\pi Y}{YL}$$

where ${}_m B_{pq}$ - coefficients of Fourier series description of mode m

XL = SNODC(2,1,I) = length x-direction

YL = SNODC(3,2,I) = length y-direction

No other structural constants are required.

## 1f. Summary of Program Variables Associated With the Surface Element Description

ISUR - assigned surface number
ISTYP(ISUR) - surface type
SNODC(MXS,3,NS) - array holding node points in the surface component coordinate system
WM(1,MWM,ISUR) - natural frequency of mode MWM
WM(2,MWM,ISUR) - modal index p of mode MWM
WM(3,MWM,ISUR) - modal index q of mode MWM
SC(NSC,ISUR) - structural constants for modal analysis

G(x,y) = geometry correction factor

$$= \left(1 + \left(\frac{\partial z}{\partial x}\right)^2 + \left(\frac{\partial z}{\partial y}\right)^2\right)^{1/2}$$

where z = f(x,y) equation of the surface.

## 2a. Structural Type 2: Flat, Orthotropic, Rectangular Panel With Simply Supported Edges

## 2b. Shape

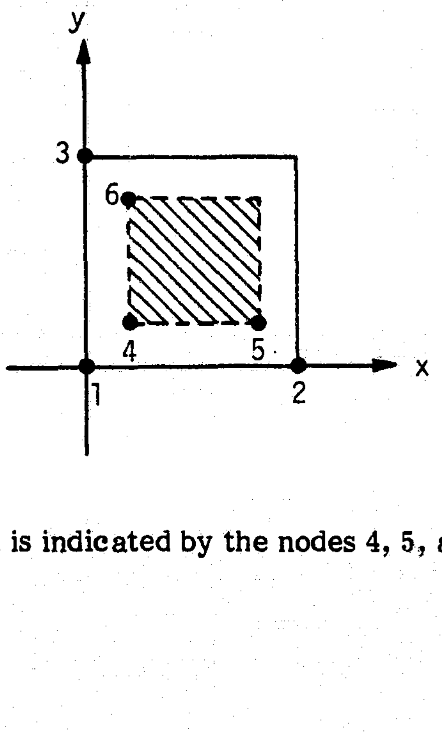

where the area of integration is indicated by the nodes 4, 5, and 6.

## 2c. Surface Equations

Z = 0.0: surface equation

G = 1.0: geometry correction factor

AJ = 1.0: Jacobian

## 2d. Natural Frequency Equation and Structural Constants

$$\omega_{pq}^2 = \frac{D}{m}\left[\left(\sqrt{\frac{D_x}{D}}\left(\frac{p}{xL}\right)^2 + \sqrt{\frac{D_y}{D}}\left(\frac{q}{yL}\right)^2\right)^2 + 2\left(\frac{p}{xL}\right)^2\left(\frac{q}{yL}\right)^2\left(\frac{D_{xy}}{D} - 1\right)\right]$$

$D_x$ - bending rigidity of structure in section perpendicular to the x-axis

$D_y$ - bending rigidity of structure in section perpendicular to the y-axis

$D_{xy}$ - $(D_x \nu_x + D_y \nu_y + 4Gh^3/12) / 2$

$D$ - $D_x D_y$

$\nu_x$ - Poisson's ratio for x-direction

$\nu_y$ - Poisson's ratio for y-direction

G - material's shear modulus

h - panel's thickness

m - mass per unit surface area

p, q - modal indexes

xL, yL - length of panel in the x- and y-directions respectively

Note that if the panel is isotropic, the natural frequency equation reduces to

$$\omega_{pq}^2 = \frac{D}{m}\left(\left(\frac{p}{xL}\right)^2 + \left(\frac{q}{yL}\right)^2\right)^2$$

Assign $D_x$ - SC(1,IS)

$D_y$ - SC(2,IS)

$4Gh^3/12$ - SC(3,IS)

$\nu_x$ - SC(4,IS)

$\nu_y$ - SC(5,IS)

m - SC(6,IS)

### 2e. Mode Shape Equations

$$\Psi_{pq}(x,y) = \sin \frac{p\pi X}{XL} \sin \frac{q\pi Y}{YL} \Big/ D_{pq}$$

$$D_{pq} = \left(\frac{\rho h A}{4}\right)^{1/2} \quad \text{FOR } p,q \geq 1$$

The selection of $D_{mn}$ as shown yields the generalized mass:

$$M_{pq} = \rho h \int_A \Psi^2_{pq}(x,y)\, dA = 1.0$$

$$\text{FOR } p,q \geq 1$$

### 2f. Summary of Program Variables Associated With the Surface Element Description

See section f of surface type 1.

### 3a. Structural Type 3: Circular Shape With Fourier Series Mode Description

### 3b. Shape

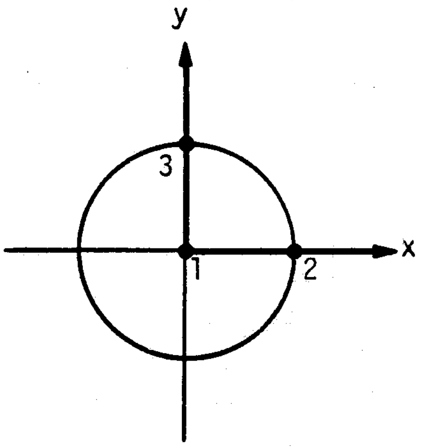

### 3c. Surface Equations

Z = 0.0 - Surface equation

G = 1.0 - Geometry correction factor

AJ = 1.0 - Jacobian

### 3d. Natural Frequency Equation and Structural Constants

Natural frequencies provided as data along with Fourier series data.

### 3e. Mode Shape

$$\psi_m(x,y) = \sum_{p}^{mx} \sum_{q}^{nx} {}_m B_{pq} \sin \frac{p\pi x}{xL} \sin \frac{q\pi y}{yL}$$

where $_mB_{pq}$ - coefficients of Fourier series description of mode m

xL = 2 * SNODC(2,1,I)

yL = xL

Since no additional structural constants are needed, NSC = 0.

## 3f. Summary of Program Variables Associated With the Surface Element Description

See section f of surface type 1.

## 4a. Structural Type 4: Thin, Homogeneous, Circular Panel

## 4b. Shape

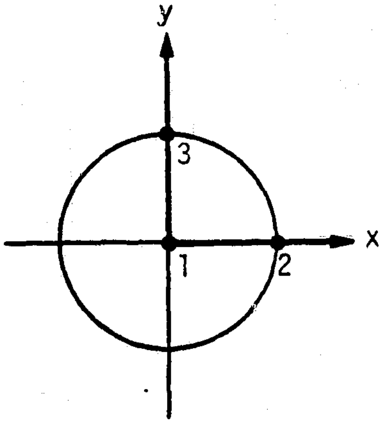

## 4c. Surface Equations (Cylindrical Coordinate System r, $\theta$, z)

$Z = 0.0$ - Surface equation
$G = 1.0$ - Geometry correction factor
$AJ = r$ - Jacobian

## 4d. Natural Frequency Equation and Structural Constants

$$\omega_{pq} = \frac{h}{4a}\sqrt{\frac{E}{3\rho(1-\nu^2)}} \cdot \left(\frac{K_{qp}\, a}{\pi}\right)^2$$

where

$h$ - thickness
$a$ - radius
$\rho$ - density
$E$ - modulus of elasticity
$\nu$ - Poisson's constant
$p, q$ - modal indexes in the r- and $\theta$-directions respectively
$K_{qp}$ - the roots of the equation ; (SEE NEXT PAGE)

$$I_\gamma(K_{\gamma p}a)\,J'_\gamma(K_{\gamma p}a) = J_\gamma(K_{\gamma p}a)\,I'_\gamma(K_{\gamma p}a)$$

ASSIGN ;

$$SC(1,I) = h/4a\sqrt{E/3\rho(1-\nu^2)}$$

$$SC(2,I) = \rho h$$

## 4e. Mode Shape Equation

$$\psi_{p\gamma}(r,\theta) = \frac{\sin(\gamma\theta)}{D_{p\gamma}}\left(J_\gamma(K_{\gamma p}r) + \frac{J_\gamma(K_{\gamma p}a)}{I_\gamma(K_{\gamma p}a)}I_\gamma(K_{\gamma p}r)\right)$$

$J_m(x)$ - Bessel function of the first kind

$I_m(x)$ - hyperbolic Bessel function of the first kind = $i^{-m}(j_m(ix)$

$$D_{p\gamma} = \left[\rho h\int_0^{2\pi}\int_0^a \psi_{p\gamma}^2(r,\theta)\,r\,dr\,d\theta\right]^{1/2}$$

$$= \rho h A\left(\frac{\varepsilon_\gamma}{2}\right)\Big\{\left(J'^2_\gamma(K_{\gamma p}a) + \left(1-\frac{\gamma^2}{K_{\gamma p}^2a^2}\right)J^2_\gamma(K_{\gamma p}a)\right)$$

$$+\ 2\,\frac{J_\gamma(K_{\gamma p}a)}{I_\gamma(K_{\gamma p}a)}\left(J'^2_\gamma(K_{\gamma p}a) + \left(1-\frac{\gamma^2}{K_{\gamma p}^2a^2}\right)I^2_\gamma(K_{\gamma p}r)\right)$$

$$+\left(\frac{J_\gamma(K_{\gamma p}a)}{I_\gamma(K_{\gamma p}a)}\right)^2\cdot\left(I'^2_\gamma(K_{\gamma p}a) + \left(1-\frac{\gamma^2}{K_{\gamma p}^2a^2}\right)I^2_\gamma(K_{\gamma p}a)\right)\Big\}\Big]^{1/2}$$

HENCE ,

$$M_{p\gamma} = \rho h\int_A \psi_{p\gamma}^2(r,\theta)\,dA = 1.0$$

## 4f. Summary of Program Variables Associated With the Structural Element Description

See part f of structural element 1.

## 5a. Structural Type 5: Frame-Stiffened Orthotropic Whole Shell

The frame-stiffened orthotropic whole shell has shear diaphram end conditions.

## 5b. Shape

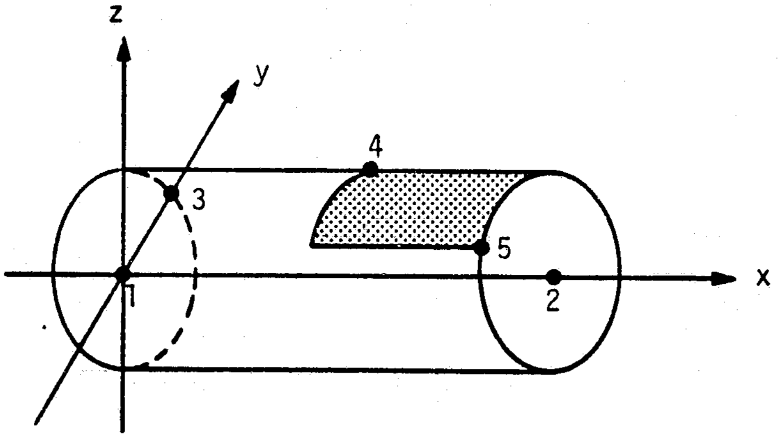

Since the whole shell is not single valued in the z-coordinate direction, the shell must be partitioned into subsurfaces that are single valued in the z-direction. Nodes 4 and 5 are used to define the location of the subsurfaces as shown.

## 5c. Surface Equations (Cylindrical Coordinate System r,$\theta$, x)

$r$ = constant - Surface equation

$G = 1.0$ - Geometry correction factor

$AJ = r$ - Jacobian

## 5d. Natural Frequency Equation

The natural frequency must be determined by the lowest frequency solution of the shell matrix equation $[\mathcal{L}'] = 0$, where

$$[\mathcal{L}'] = \begin{bmatrix} a_{11} & a_{12} & a_{13} \\ a_{21} & a_{22} & a_{23} \\ a_{31} & a_{32} & a_{33} \end{bmatrix}$$

AND

$$a_{11} = \frac{C_{11}}{C_{22}}\left(\frac{p\pi b}{xL}\right)^2 + \frac{C_{11}}{C_{22}}\,\frac{(1-\nu)}{2}\left(\frac{q}{2}\right)^2 + \frac{\rho_s b^2}{C_{22}}\omega^2$$

$$a_{22} = \frac{(1-\nu)}{2}\,\frac{C_{11}}{C_{22}}\left(\frac{p\pi b}{xL}\right)^2 + \left(\frac{q}{2}\right)^2 + \frac{\rho_s b^2}{C_{22}}\omega^2$$

$$a_{33} = 1 + \frac{D_{22}}{b^2 C_{22}}\left[\frac{D_{11}}{D_{22}}\left(\frac{p\pi b}{xL}\right)^4 + \frac{2D_{11}}{D_{22}}\left(\frac{p\pi b}{xL}\right)^2\left(\frac{q}{2}\right)^2 + \left(\frac{q}{2}\right)^4\right]$$

$$+ \frac{\rho_s b^2}{C_{22}}\omega^2$$

$$a_{21} = a_{12} = \frac{(1+\nu)}{2}\,\frac{C_{11}}{C_{22}}\left(\frac{p\pi b}{xL}\right)\left(\frac{q}{2}\right)$$

$$a_{13} = a_{31} = \nu\,\frac{C_{11}}{C_{22}}\left(\frac{p\pi b}{xL}\right)$$

$$a_{23} = a_{32} = \frac{q}{2}$$

and

p - axial modal index
q - circumferential modal index
$\rho_s$ - density of the skin material
b - radius of the cylinder
xL - length of the cylinder
$\nu$ - Poisson's constant for cylinder material

AND WHERE

$$C_{11} = E_{S_s} \frac{A_{S_s}}{L_\theta (1-\nu^2)} \quad ; \quad D_{11} = \frac{E_{S_s} I_{S_s}}{L_\theta (1-\nu^2)}$$

$$C_{22} = E_{S_\theta} \frac{A_{S_\theta}}{L_F (1-\nu^2)} + E_F \frac{A_F}{L_F} \; ; \; D_{22} = \frac{E_{S_\theta} E_{S_\theta}}{L_F (1-\nu^2)} + \frac{E_F I_{F_\theta}}{L_F}$$

where $A_{S_s}$ - cross-sectional area of load-bearing skin normal to axial direction.

$A_S$ - effective cross-sectional area of load-bearing skin normal to circumferential direction

$A_F$ - frame cross-sectional area

$I_{S_s}$ - moment of inertia of skin section normal to axial direction about skin-frame centroid

$I_{S_\theta}$ - moment of inertia of skin section normal to circumferential direction about skin-frame centroid

$I_{F_\theta}$ - moment of inertia of frame cross section about skin-frame centroid

$L_F$ - axial <u>repeat</u> length of frames

$L_\theta$ - circumferential length of skin

$E_{S_s}$ - axial elasticity of the skin

$E_{S_s}$ - circumferential elasticity of the skin

$E_F$ - elasticity of the frame

C-3

Assign the following structural constants (NSC=6)

SC(1,I) = $C_{11}$
SC(2,I) = $C_{22}$
SC(3,I) = $D_{11}$
SC(4,I) = $D_{22}$
SC(5,I) = $\nu$
SC(6,I) = $\rho_s$

## 5e. Mode Shape Equation in Cylindrical Coordinates (r, , z)

r = constant (SNODC(3,2,ISUR))

$$\psi_{pq}(x,\theta) = \sin\left(\frac{p\pi x}{XL}\right)\cos(q\theta) \Big/ D_{pq}$$

WHERE

$$D_{pq} = \rho h \int_0^{2\pi}\int_0^{XL} \sin^2\left(\frac{p\pi x}{XL}\right)\cos^2(q\theta)\,dx\,d\theta$$

$$= \left(\rho h A \frac{\mathcal{E}_q \mathcal{E}_p}{4}\right)^{1/2}$$

where A = area of shell segment
$\mathcal{E}_p$ = 1 if p 0
= 2 if p = 0
$\mathcal{E}_q$ = 1 if q 0
= 2 if q = 0

THIS RESULTS IN

$$M_{pq} = \rho h \int_A \psi_{pq}^2(x,\theta)\,dA = 1.0$$

ORIGINAL PAGE IS
OF POOR QUALITY

## 6a. Structural Type 6: Frame-Stiffened Orthotropic Shell Segment

This structure type describes the motion of a frame-stiffened orthotropic shell segment with shear diaphram end conditions at the boundries.

## 6b. Shape

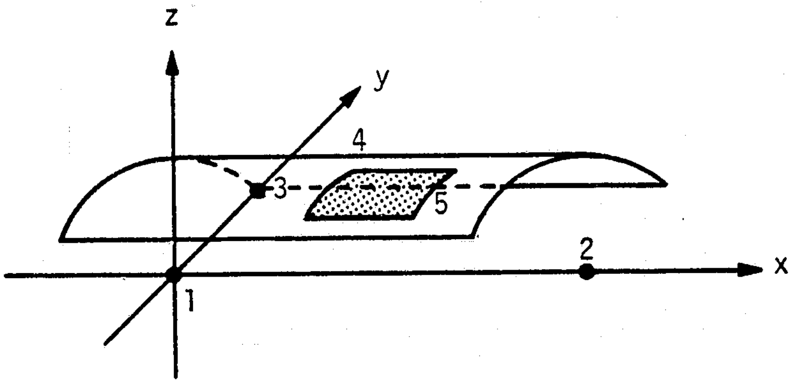

## 6c. Surface Equations (Cylinderical Cordinates (r,$\theta$, x))

r = constant - Surface equation
G = 1.0 - Geometry correction factor
AJ = r - Jacobian

## 6d. Natural Frequeny Equation

The natural frequency must be determined by the lowest frequency solution of the shell matrix equation $[\mathcal{L}'] = 0$, where

$$[\mathcal{L}'] = \begin{bmatrix} a_{11} & a_{12} & a_{13} \\ a_{21} & a_{22} & a_{23} \\ a_{31} & a_{32} & a_{33} \end{bmatrix}$$

AND

$$a_{11} = \frac{C_{11}}{C_{22}}\left(\frac{p\pi b}{XL}\right)^2 + \frac{C_{11}}{C_{22}}\,\frac{(1-\nu)}{2}\left(\frac{q\pi}{\alpha}\right)^2 + \frac{\rho_s b^2}{C_{22}}\,\omega^2$$

$$a_{22} = \frac{(1-\nu)}{2}\,\frac{C_{11}}{C_{22}}\left(\frac{p\pi b}{XL}\right)^2 + \left(\frac{q\pi}{\alpha}\right)^2 + \frac{\rho_s b^2}{C_{22}}\,\omega^2$$

$$a_{33} = 1 + \frac{D_{22}}{b^2 C_{22}}\left[\frac{D_{11}}{D_{22}}\left(\frac{p\pi b}{XL}\right)^4 + 2\,\frac{D_{11}}{D_{22}}\left(\frac{p\pi b}{XL}\right)^2\left(\frac{q\pi}{\alpha}\right)^2 + \left(\frac{q\pi}{\alpha}\right)^4\right] + \frac{\rho_s b^2}{C_{22}}\,\omega^2$$

$$a_{21} = a_{12} = \frac{(1+\nu)}{2}\,\frac{C_{11}}{C_{22}}\left(\frac{p\pi b}{XL}\right)\left(\frac{q\pi}{\alpha}\right)$$

$$a_{13} = a_{31} = \nu\,\frac{C_{11}}{C_{22}}\left(\frac{p\pi b}{XL}\right)$$

$$a_{23} = a_{32} = \left(\frac{q\pi}{\alpha}\right)$$

$\alpha$ - angular length of shell segment in radians
and p - axial modal index
q - circumferential modal index
$\rho_s$ - density of the skin material
b - radius of the cylinder
xL - length of the cylinder
$\nu$ - Poisson's constant for cylinder material

AND WHERE

$$C_{11} = E_{S_s} \frac{A_{S_s}}{L_\theta (1-\nu^2)} \quad ; \quad D_{11} = \frac{E_{S_s} I_{S_s}}{L_\theta (1-\nu^2)}$$

$$C_{22} = E_{S_\theta} \frac{A_{S_\theta}}{L_F (1-\nu^2)} + E_F \frac{A_F}{L_F} \quad ; \quad D_{22} = \frac{E_{S_\theta} E_{S_\theta}}{L_F (1-\nu^2)} + \frac{E_F I_{F_\theta}}{L_F}$$

where $A_{S_s}$ - cross-sectional area of load-bearing skin normal to axial direction.

$A_{S_\theta}$ - effective cross-sectional area of load-bearing skin normal to circumferential direction

$A_F$ - frame cross-sectional area

$I_{S_s}$ - moment of inertia of skin section normal to axial direction about skin-frame centroid

$I_{S_\theta}$ - moment of inertia of skin section normal to circumferential direction about skin-frame centroid

$I_{F_\theta}$ - moment of inertia of frame cross section about skin-frame centroid

$L_F$ - axial repeat length of frames

$L_\theta$ - circumferential length of skin

$E_{S_s}$ - axial elasticity of the skin

$E_{S_\theta}$ - circumferential elasticity of the skin

$E_F$ - elasticity of the frame

Assign the following structural constants

SC(1,I) = $C_{11}$
SC(2,I) = $C_{22}$
SC(3,I) = $D_{11}$
SC(4,I) = $D_{22}$
SC(5,I) = $\nu$

### 6e. Mode Shape Equation

r = constant

$$\psi_{pq}(x,\theta) = \sin\left(\frac{p\pi x}{XL}\right)\sin\left(\frac{q\pi\theta}{\alpha}\right) \Big/ D_{pq}$$

WHERE

$$D_{pq} = \rho h \int_0^{\alpha}\int_0^{XL} \sin^2\left(\frac{p\pi x}{XL}\right) \sin\left(\frac{q\pi\theta}{\alpha}\right) dx\, d\theta$$

$$= \left(\rho h A\, \mathcal{E}_p \mathcal{E}_q / 4\right)^{1/2}$$

where A = area of shell segment
$\mathcal{E}_p$ = 1.0 if p 0
= 2.0 if p = 0
$\mathcal{E}_q$ = 1.0 if q 0
= 2.0 if q = 0

HENCE

$$M_{pq} = \rho h \int_A \psi_{pq}^2(x,\theta)\, dA = 1.0$$

ORIGINAL PAGE IS
OF POOR QUALITY

## 7a. Structural Type 7: Rectangular Panel With Sine Series Mode Shape Over Specified Modally Active Regions of the Panel

This particular surface was added to allow approximate modeling of a surface's modal motion by dividing the surface into modally active regions for each mode. The method was developed by a NASA contractor to approximate finite element determined mode shapes of the Space Shuttle payload bay structures. (Pope, L. D., et al. Space Shuttle Payload Bay Acoustics Prediction Study: Volume II, Analytical Model. NASA CR 159956, March 1980.)

## 7b. Shape

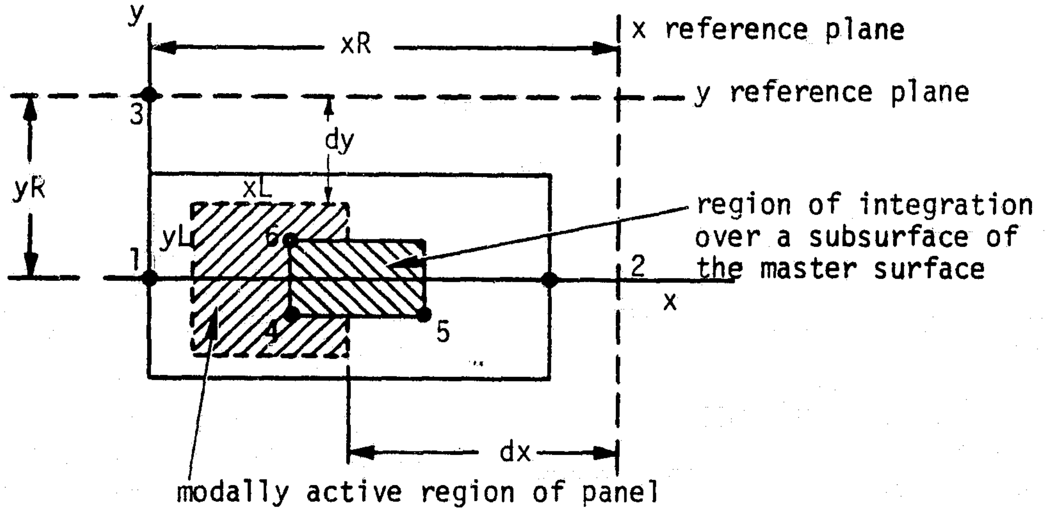

dx - distance from x reference plane to modally active region
dy - distance from y reference plane to modally active region
xL - x length of modally active region
yL - y length of modally active region
xR, yR - length from panel origin to the reference planes

The above listed parameters are placed in storage for each mode of the surface. Those areas of the surface that are outside the modally active region are assumed to have zero modal deflection. Recall that the modally active region may change from mode to mode. The surface may also be curved in the z-direction as illustrated below.

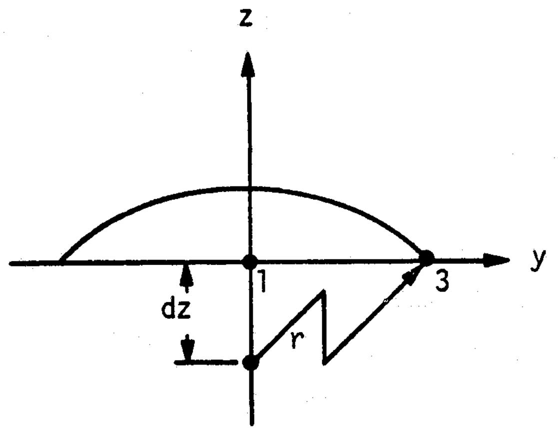

where r is the radius of curvature (given as a structural constant) and dz is the offset of th circle center from the y-axis as indicated.

### 7c. Surface Equations

Flat: Z = 0.0 - Surface equation
G = 1.0 - Geometry correction factor
AJ = 1.0 - Jacobian

Curved: $Z = (r^2 - y^2)^{1/2} - DZ$

$G = (1 + y^2/(r^2 - y^2))^{1/2}$

$AJ = 1.0$

$DZ = (r^2 - SNODC(3,2,IS)^2)^{1/2}$

### 7d. Natural Frequencies

The natural frequencies of this surface are given as data.

### 7e. Mode Shapes

Translate the coordinates of integration x, y into the coordinates of the modally active region.

xC = x - (xR - dx - xL): both flat and curved surfaces
yC = y - (yR - dy - yL): flat surface
= $(r \cos^{-1}(SNODC(3,2,IS)/r) + dy + yR) - r \cos(y/r)$: curved surface

where xL, yL - length of the modally active region in the x- and y-direction respectively

xR, yR - reference point for x- and y-directions respectively

dx, dy - distance from reference planes to the modally active regions

$$\psi_{pq}(x,y) = \sin(p\pi x/xL)\ \sin(q\pi y/yL)\ /\ a_{pq}$$

$a_{pq}$ - combined mode shape normalization and amplitude factor such that

$$m_{pq} = \rho h \int_A \psi_{pq}^2(x,y)\, dA = 1.0$$

xL, yL, dx, dy, and $a_{pq}$ may change for each mode of the structure. If x or y should fall outside the modally active region for the mode, then $\psi_{pq}(x, y)$ is set to zero. Also, y is the length along the surface of a curved door.

## 7f. Summary of Program Variables Associated With the Surface Element Description

ISUR - assigned surface number

ISTYP(ISUR) - surface type

SNODC(MXS,3,NS) - array holding node points in the surface component coordinate system

WM(1,MWM) - natural frequency of mode MWM

WM(2,MWM) - modal index p of mode MWM

WM(3,MWM) - modal index q of mode MWM

SC(NSC,ISUR) - structural constants for modal analysis

SC(1,ISUR) - number of modes with BPQ type data

SC(2,ISUR) - radius of surface curvature (-1.0 if flat)

BPQ(MX,NX,NSMX) - the factors for the calculation of the node shape are read into this array in the routine DATALD under section n. Structural constants.

BPQ(1,1,MWM) - frequency

BPQ(1,2,MWM) - p modal index placed directly into array WM

BPQ(1,3,MWM) - q modal index

BPQ(1,4, MWM) - normalizing factor
BPQ(1,5,MWM) - amplitude factor
BPQ(1,6,MWM) - x-modally active dimension (xL)
BPQ(1,7,MWM) - y-modally active dimension (yL)
BPQ(1,8,MWM) - x-distance to x reference plane (dx)
BPQ(1,9,MWM) - y-distance to y reference plane (dy)

## 8a. Structural Type 8: Flat, Orthotropic, Rectangular Panel With Clamped Edges

## 8b. Shape

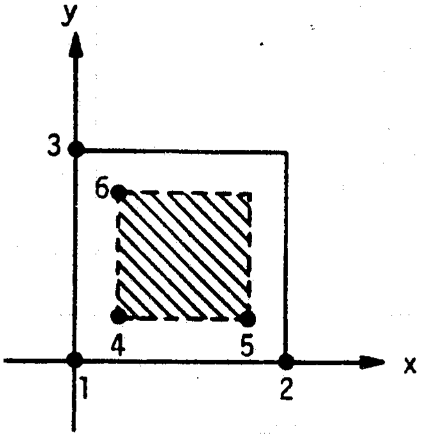

The area of integration is indicated by the nodes 4, 5, and 6.

## 8c. Surface Equations

Z = 0.0 - surface equation
G = 1.0 - geometry correction factor
AJ = 1.0 - Jacobian

## 8d. Natural Frequency Equation and Structural Constants

$$\omega_{pq} = \frac{\pi^2}{m^{1/2}}\left[\frac{G_1^4 D_x}{a^4} + \frac{G_2^4 D_y}{b^4} + \frac{2H_1 H_2 D_{xy}}{a^2 b^2}\right]^{1/2}$$

where

$$D_x = \frac{E_x h^3}{12(1-\nu_x \nu_y)}$$

$$D_y = \frac{E_y h^3}{12(1-\nu_x \nu_y)}$$

$$D_k = \frac{G h^3}{12}$$

$$D_{xy} = D_x \nu_y + 2 D_k$$

and

$E_x, E_y$ - modulous of elasticity of panel in x and y directions respectively

$\nu_x ; \nu_y$ - poisson's ratio in the x and y directions respectively

G - Shear modulus

h - thickness of panel

m - material mass per unit surface area

a, b - length of panel in x and y directions respectively

The coefficients of the natural frequency approximation are

$$G_1 = 1.506 \quad ; \; p = 1 \quad \text{AND} \quad (p + 1/2) \quad ; \; p > 1$$

$$G_2 = 1.506 \quad ; \; q = 1 \quad \text{AND} \quad (q + 1/2) \quad ; \; q > 1$$

$$H_1 = 1.248 \quad ; \; p = 1 \quad \text{AND} \quad G_1^2 \left(1 - \frac{2}{\pi G_1}\right) ; \; p > 1$$

$$H_2 = 1.248 \quad ; \; q = 1 \quad \text{AND} \quad G_2^2 \left(1 - \frac{2}{\pi G_2}\right) \quad ; \; q > 1$$

Assign

SC(1,IS) = Dx
SC(2,IS) = Dy
SC(3,IS) = Dk
SC(4,IS) = $\sigma_x$
SC(5,IS) = $\sigma_y$
SC(6,IS) = m

## 8e. Mode Shape Equations

$$\psi_{pq}(x,y) = \Big(A_p\big(\cosh(\pi(p+1/2)\bar{x}) - \cos(\pi(p+1/2)\bar{x})$$

$$- \sigma_p(\sinh(\pi(p+1/2)\bar{x}) - \sin(\pi(p+1/2)\bar{x}))\big)$$

$$\bullet\ A_q\big(\cosh(\pi(q+1/2)\bar{y}) - \cos(\pi(q+1/2)\bar{y})$$

$$- \sigma_q(\sinh(\pi(q+1/2)\bar{y}) - \sin(\pi(q+1/2)\bar{y}))\big)\Big)$$

$$/(D_p M_T D_q M_T)$$

where $M_T$ = square root of the total panel mass and

| n* | $A_n$ | $\sigma_n$ | $D_n$ |
|---|---|---|---|
| 1 | 0.630 | 0.982 | .396 |
| 2 | 0.663 | 1.001 | .439 |
| ≥3 | 0.661 | 1.00 | .437 |

*n is the p or q index.

AND $\bar{x} = x/a$
$\bar{y} = y/b$

The mode shape is normalized such that

$$M_{pq} = \rho h \cdot \int_A \psi_{pq}^2 (x,y)\, dA = 1.0$$

### 8f. Summary of Program Variables Associated With the Structural Element Description

See section f of structure type 1.

## APPENDIX B

## PROGRAM LIBRARY OF SEA DESCRIPTIONS

### 1a. SEA DESCRIPTION 1: EQUIVALENT ORTHOTROPIC RECTANGULAR PANEL

Since experiments have shown the joint acceptance to vary little with end conditions, this description is valid for all equivalent panels with simply supported to fixed boundaries.

### 1b. MODAL DENSITY EQUATIONS

The modal density and average modal indexes for each band of interest are calculated by evaluating the equation

$$\omega_{mn}^2 = \pi^4 \frac{D}{\rho h}\left[\left(\sqrt{\frac{D_x}{D}}\left(\frac{m}{XL}\right)^2 + \sqrt{\frac{D_y}{D}}\left(\frac{n}{YL}\right)^2\right)^2 + 2\left(\frac{m}{XL}\right)^2\left(\frac{n}{YL}\right)^2\left(\frac{D_{xy}}{D} - 1\right)\right]$$

where

$D_x$ - bending rigidity of structure in section perpendicular to the x-axis

$D_y$ - bending rigidity of structure in section perpendicular to the y-axis

$D_{xy}$ - $(D_x\ {}_x + D_y\ {}_y + 4Gh^3/12)\ \ 2$

$D$ - $D_x D_y$

$\nu_x$ - Poisson's ratio for x-direction

${}_y$ - Poisson's ratio for y-direction

$G$ - material's shear modulus

$h$ - panel thickness

$\rho$ - density of panel material

m, n - modal indexes

XL, YL - length of panel in the x- and y-directions, respectively.

Note that if the panel is isotropic, the natural frequency equation reduces to

$$\omega_{mn}^2 = \pi^4 \frac{D}{\rho h}\left(\left(\frac{m}{XL}\right)^2+\left(\frac{n}{YL}\right)^2\right)^2$$

Assign (see also section 1d)

$D_x$ - WMH(1,1)

$D_y$ - WMH(1,2)

$4Gh^3/12$ - WMH(1,3)

$_x$ - WMH(1,4)

$_y$ - WMH(1,5)

h - WMH(1,6)

XL - WMH(1,7)

YL - WMH(1,8)

An iterative procedure is used to calculate the number of modes in each band from the equation and to calculate the average value of the modal indexes in each band.

## 1c. TYPICAL JOINT ACCEPTANCE DEFINITION

The joint acceptance must be calculated for each random pressure field type held in the program library, if possible.

- For the reverberant pressure field (pressure field type 1),

$$J_M^2(\omega) = \frac{1}{A^2}\int_X\int_Y\int_{X'}\int_{Y'} \frac{\sin(k(x-x')}{k(x-x')} \; \frac{\sin(k(y-y'))}{k(y-y')}$$

$$\cdot \; \sin\left(\frac{m\pi x}{XL}\right) \sin\left(\frac{m\pi x'}{XL}\right) \sin\left(\frac{n\pi y}{YL}\right) \sin\left(\frac{n\pi y'}{YL}\right)$$

$$\cdot \; dy'\,dx'\,dy\,dx$$

where A - area of surface
k - $/C_o$

The analytical relation is

$$J_M^2(\omega) = VI(m, XL, \omega) \cdot VI(n, YL, \omega)$$

with

$$VI(j, \ell, \omega) = \frac{1}{2j\pi^2\beta}\Big(\mathrm{ci}(\pi(\beta+j)) - \mathrm{ci}(\pi(\beta-j))\Big)$$

$$+ \frac{1}{2\pi\beta}\Big(\mathrm{Si}(\pi(\beta+j)) + \mathrm{Si}(\pi(\beta-j))\Big)$$

$$+ \frac{1}{\pi^2(j^2-\beta^2)}\Big(1-(-1)^j\cos(\pi\beta)\Big)$$

ORIGINAL PAGE IS
OF POOR QUALITY

and

$$\mathrm{Cin}(z) = \int_0^z \frac{1-\cos x}{x}\,dx$$

$$\mathrm{Si}(z) = \int_0^z \frac{\sin x}{x}\,dx$$

$$\beta = l\omega / C_0\pi$$

o For the aerodynamic turbulence (pressure field type 2),

$$J_m^2(\omega) = \frac{1}{A^2} \int_x\int_y\int_{x'}\int_{y'} \exp\left[-\alpha_x K_x |x-x'|\right] \cos\left(K_x(x-x')\right)$$

$$\cdot \exp\left[-\alpha_y K_y |y-y'|\right] \cos\left(K_y(y-y')\right)$$

$$\cdot \sin\left(\frac{m\pi x}{XL}\right) \sin\left(\frac{m\pi x'}{XL}\right) \sin\left(\frac{n\pi y}{YL}\right) \sin\left(\frac{n\pi y'}{YL}\right)$$

$$\cdot\ dy'\,dx'\,dy\,dx$$

The analytical solution is

$$J_m^2(\omega) = \frac{1}{A^2} \cdot VI(m, XL, \alpha_x, K_x) \cdot VI(n, YL, \alpha_y, K_y)$$

WHERE

$$VI(j, l, \alpha, k) = A_1(j)\left(1 - (-1)^j \mathrm{EXP}[-\pi\alpha\beta] \cos\pi\beta\right)$$
$$+ B(j)\,(-1)^j\, \mathrm{EXP}[-\pi\alpha\beta] \sin\pi\beta$$
$$+ C(j)$$

~~where~~

WITH

$$A_1(j) = \frac{2}{(j\pi)^2 D^2(j)} \left( \left( (\alpha^2 - 1)(\beta/j)^2 + 1 \right)^2 - 4\left(\alpha(\beta/j)^2\right)^2 \right)$$

$$B(j) = \frac{8}{(j\pi)^2 D^2(j)} \alpha (\beta/j)^2 \left( (\alpha^2 - 1)(\beta/j)^2 + 1 \right)$$

$$C(j) = \frac{1}{(j\pi)^2 D(j)} \alpha (\beta/j) \left( (\alpha^2 + 1)(\beta/j)^2 + 1 \right)$$

$$D(j) = \left( (\alpha^2 + 1)(\beta/j)^2 + 1 \right)^2 - 4(\beta/j)^2$$

$$\beta = \omega l / \pi c_0$$

- For a random amplitude plane wave field (pressure field type 3),

$$J_m^2(\omega) = \frac{1}{A^2} \int_X \int_Y \int_{X'} \int_{Y'} \cos\left[\frac{\omega}{C_o} \cos(\theta)(X-X')\right]$$

$$\cdot\left[\delta(\omega-\omega')+\delta(\omega+\omega')\right] \cdot \cos\left[\frac{\omega}{C_o} \cos(\theta)(Y-Y')\right]$$

$$\cdot\left[\delta(\omega-\omega')+\delta(\omega+\omega')\right] \cdot \sin\left(\frac{m\pi X}{XL}\right) \sin\left(\frac{m\pi X'}{XL}\right)$$

$$\cdot \sin\left(\frac{n\pi Y}{YL}\right) \sin\left(\frac{n\pi Y'}{YL}\right) dy'dx'dydx$$

The analytical solution is

$$J_m^2(\omega) = \frac{1}{A^2} VI(m, XL, \omega, \theta)\, VI(n, YL, \omega, \theta)$$

where

$$VI(j, l, \omega, \theta) = \frac{2}{\pi^2} j^2\left(1-(-1)^j \cos \pi\beta\right) \Big/ \left(j^2-\beta^2\right)^2$$

AND

$$\beta = \frac{\omega\, l}{C_o\, \pi} \cos(\theta)$$

## 1d. SUMMARY OF PROGRAM VARIABLES ASSOCIATED WITH THE SEA DESCRIPTION

WMH(NSEAC,NTOB) - Array of SEA constants that may be allowed to vary with frequency

MD(NMS,NTOB) - Array of modal densities for each band of each master surface

All SEA constants that do not vary with frequency may be backed into the first row of the two-dimensional WMH array.

WMH(1,1) - $D_x$

WMH(1,2) - $D_y$

WMH(1,3) - $4Gh^3/12$

WMH(1,4) - $\nu_x$

WMH(1,5) - $\nu_y$

WMH(1,6) - h

WMH(1,7) - XL

WMH(1,8) - YL

WMH(2,NOB) - m, average m modal index over band

WMH(3,NOB) - n, average n modal index over band

For SEA description type 1: NSEAC = 3.

## 2a. SEA DESCRIPTION 2: EQUIVALENT ORTHOTROPIC WHOLE SHELL

The joint acceptance of a whole equivalent shell with shear diaphram end conditions is given here in semiempirical form and applies to a reverberant excitation field only.

## 2b. MODAL DENSITY EQUATIONS

$$n_r = FI \cdot 0.178 \sqrt{\omega a / c_L} \cdot D\omega \quad ; \quad \frac{\omega a}{c_L} < 0.9$$

$$= FI \cdot 0.8 \, D\omega \quad ; \quad 0.9 < \frac{\omega a}{c_L} < 1.10$$

$$= FI \cdot 0.25 \, D\omega \quad ; \quad \frac{\omega a}{c_L} > 1.10$$

where $Fl - 2*\sqrt{3}\,\ell/t$

$\ell$ - length of cylinder

t - thickness of cylinder

$C_L$ - longitudinal wave speed in cylinder

a - radius of cylinder

$D\omega$ - bandwidth of interest normalized to the ring frequency

$\omega$ - frequency, rad/sec

## 2c. TYPICAL JOINT ACCEPTANCE DEFINITIONS

For a reverberant pressure field (pressure field type 1),

$$J_m^2(\omega) = (2/3)(4\pi a/(4\pi a + 2\ell))\; J_m^2(\omega)_{PLATE}$$

WHERE $J_m^2(\omega)_{PLATE}$ IS AS IN SEA DESCRIPTION /

WITH $XL = \ell$

$YL = 2\pi a$

where a - radius of cylinder

$\ell$ - length of cylinder

A - surface area of cylinder

$\omega_{cr}$ - cirtical frequency of cylinder

$k - \omega/C_o$

$C_o$ - speed of sound in air

$\rho$ - density of air

$\rho_{CYL}$ - density of cylinder

$M_r = \rho_{CYL} \cdot t \cdot A$

## 2d. SUMMARY OF PROGRAM VARIABLES ASSOCIATED WITH SEA DESCRIPTION

WMH(NSEAC,NTOB) - Array of the SEA factors as a function of band center frequency

WMH(1,1) - a
WMH(1,2) - $\ell$
WMH(1,3) - t
WMH(1,4) - $\rho_{cyl} t$
WMH(1,5) - longitudinal wave speed in cylinder

MD(IS,NOB) - Array of modal densities

For SEA description type 2, therefore, NSEAC = 1.

## 3a. SEA DESCRIPTION 3: DIRECT DATA

The joint acceptance and modal densities are known from some other source as data.

## 3b. MODAL DENSITY EQUATIONS

Modal density given directly as data for each band of interest.

## 3c. TYPICAL JOINT ACCEPTANCE DEFINITIONS

Joint acceptance definitions are also given as data in the order described in section 3d.

## 3d. SUMMARY OF PROGRAM VARIABLES ASSOCIATED WITH SEA DESCRIPTIONS

WMH(NSEAC,NTOB) - Array of the SEA factors as a function of band center frequency.

WMH(1,NOB) - RJA(NOB) $= J_r^2(\omega_c)$

WMH(2,NOB) - RJARV(NOB) $= J_r^2(\omega_c)^{rev}$

WMH(3,NOB) - modal density in modes/radians/second

For this surface type, NSEAC = 3.

## APPENDIX C

## PROGRAM LIBRARY OF EXTERNAL PRESSURE FIELDS

### 1a. PRESSURE FIELD TYPE 1: REVERBERANT PRESSURE FIELD

### 1b. SURFACE PRESSURE CORRELATION EQUATIONS

$$C(x-x', y-y'; \omega) = C_x(x-x'; \omega)\, C_y(y-y', \omega)$$

$$C_x(x-x', \omega) = \frac{\sin(K(x-x'))}{K(x-x')}$$

$$C_y(y-y'; \omega) = \frac{\sin(K(y-y'))}{K(y-y')}$$

where the x- and y-directions are assumed separable and

$K = \omega/c$

C = speed of sound in the fluid medium

No additional constants need be assigned, so NPFC = 0 for this pressure field type.

### 1c. GENERALIZED FORCE CALCULATIONS

If the mode shape is given by equation, the joint acceptance is generally numerically calculated. If the mode shape is given by Fourier series, the joint acceptance with a reverberant field can be calculated analytically. Note also that the rectangular panel (surface type 2) has simple sin.sin mode shapes that can be analytically integrated. The program uses the analytical calculation method whenever possible to decrease computer computation time.

$$J_m^2(\omega) = \frac{1}{A^2} \sum_{p'}^{mx} \sum_{q'}^{nx} \sum_{p}^{mx} \sum_{q}^{nx} B_{pq}\, B_{p'q'}\, VI(p, p', xL, \omega)\, VI(q, q', yL, \omega)$$

where

if i≠j and i+j is odd,

$$VI(i,j,l,\omega) = 0.0$$

If i≠j and ij is even,

$$VI(i,j,l,\omega) = \frac{1}{(j^2-i^2)\pi^2\beta}\Big\{ i\big(\mathrm{Cin}[\pi(\beta+i)] - \mathrm{Cin}[\pi(\beta-i)]\big) - j\big(\mathrm{Cin}[\pi(\beta+j)] - \mathrm{Cin}[\pi(\beta-j)]\big)\Big\}$$

If i=j,

$$VI(j,j,l,\omega) = \frac{1}{2j\pi^2\beta}\Big[\mathrm{Cin}[\pi(\beta+j)] - \mathrm{Cin}[\pi(\beta-j)]\Big] + \frac{1}{2\pi\beta}\Big[\mathrm{Si}[\pi(\beta+j)] + \mathrm{Si}[\pi(\beta-j)]\Big] + \frac{1}{\pi^2(j^2-\beta^2)}\Big[1-(-1)^j\cos(\pi\beta)\Big]$$

In all above,

$$\beta = l\omega/\pi C_0$$

$$\mathrm{Cin}(z) = \int_0^z \frac{1-\cos x}{x}\,dx$$

and

$$\mathrm{Si}(z) = \int_0^z \frac{\sin x}{x}\,dx$$

## 2a. PRESSURE FIELD TYPE 2: AERODYNAMIC TURBULENCE

## 2b. SURFACE PRESSURE FIELD CORRELATION EQUATION

$$C(x-x', y-y', \omega) = C_x(x-x', \omega)\, C_y(y-y', \omega)$$

$$C_x(x-x', \omega) = \mathrm{EXP}\left[-\alpha_x K_x |x-x'|\right] \cos\left(K_x(x-x')\right)$$

$$C_y(y-y', \omega) = \mathrm{EXP}\left[-\alpha_y K_y |y-y'|\right] \cos\left(K_y(y-y')\right)$$

$\alpha_x, \alpha_y$ - correlation constants

$K_x$, $K_y$ - factored wave numbers

Assign

$Ex(1,I) = \alpha_x$

$Ex(2,I) = K_x/K$

$Ex(3,I) = \alpha_y$

$Ex(4,I) = K_y/K$

so NPFC = 4

The correlation constants and the factored wave numbers can be varied to match the field. Only a small amount of data is available regarding near field jet and rocket noise. VIN requires the user to input these factors. As a point of reference, however, Cockburn and Jolly obtained the following average values for jet and rocket noise field impressed on the rocket itself. (1968 U. S. Air Force Flight Dynamics Laboratory report TR-68-2.)

$K_x = K$

$K_y = 0.382\ K$

$\alpha_x = 0.092$

$\alpha_y = 0.3125$

ORIGINAL PAGE IS
OF POOR QUALITY

$$B(i,j) = \frac{2(i^2+j^2)^2}{\pi^3 j^3 i^3 D(i)\, D(j)}\, \alpha\, \beta_1^2\left(\left(\alpha^2-1\right)\beta_1^2+1\right)$$

$$D(i) = \left(\left(\alpha^2+1\right)\left(\beta/i\right)^2+1\right)^2 - 4\left(\beta/i\right)^2$$

$$D(j) = \left(\left(\alpha^2+1\right)\left(\beta/j\right)^2+1\right)^2 - 4\left(\beta/j\right)^2$$

$$\beta_1 = \left(\frac{2}{i^2+j^2}\right)^{1/2} \beta$$

$$\beta = l\omega/\pi c_0$$

If i=j, then

$$VI(j,j,l,\alpha,k) = A(j)\left(1-(-1)^j e^{-\pi\alpha\beta}\cos\pi\beta\right) + B(j)\,(-1)^j e^{-\pi\alpha\beta}\sin\pi\beta + C(j)$$

$$A(j) = \frac{2}{(j\pi)^2 D^2(j)}\left(\left(\left(\alpha^2-1\right)\left(\beta/j\right)^2+1\right)^2 - 4\left(\alpha\beta^2/j^2\right)^2\right)$$

with the x-direction parallel to the axis of the thrust and y perpendicular to the axis of the thrust and K = ω/c with c the speed of sound in the fluid medium.

## 2c. GENERALIZED FORCE CALCULATIONS

If the mode shape is given by equation, the joint acceptance is generally numerically calculated. If the mode shape is given by Fourier series, the joint acceptance with a pressure field of aerodynamic turbulence can be calculated analytically.

$$J_m^2(\omega) = \frac{1}{A^2} \sum_{p'}^{mx} \sum_{q'}^{nx} \sum_{p}^{mx} \sum_{q}^{nx} {}_mB_{pq} \, {}_mB_{p'q'} \, VI(p, p', xL, \alpha_x, k_x) \cdot VI(q, q', yL, \alpha_y, k_y)$$

Note also that the simple rectangular panel (surface type 2) can be represented by a one term, where

if i≠j, then

$$VI(i, j, l, \alpha, K) = A(i,j)\left(1 - (-1)^i e^{-\pi\alpha\beta} \cos \pi\beta\right) + B(i,j)\left((-1)^i e^{-\pi\alpha\beta} \sin \pi\beta\right)$$

and

$$A(i,j) = \frac{(i^2+j^2)^2}{2\pi^2 i^3 D(i)\, D(j)} \left( \left( (\alpha^2-1)\beta_1^2 + 1 \right)^2 - 4(\alpha\beta_1^2)^2 - \left( \frac{j^2-i^2}{j^2+i^2} \right)^2 \right)$$

and

$$B(j) = \frac{8}{(j\pi)^2 D^2(j)} \alpha (\beta/j)^2 \left( (\alpha^2 - 1)(\beta/j)^2 + 1 \right)$$

$$C(j) = \frac{1}{j\pi D(j)} \alpha (\beta/j) \left( (\alpha^2 + 1)(\beta/j)^2 + 1 \right)$$

and the other terms as previously defined in this section.

### 3a. PRESSURE FIELD TYPE 3: RANDOM AMPLITUDE PLANE WAVE FIELD

### 3b. SURFACE PRESSURE CORRELATION EQUATIONS

$$C(x-x', y-y', \omega) = C_x(x-x', \omega) \, C_y(y-y', \omega)$$

$$C_x(x-x', \omega) = \cos\left( \frac{\omega_0}{C_0}(x-x') \cos\theta \right)$$

$$C_y(y-y', \omega) = \cos\left( \frac{\omega_0}{C_0}(y-y') \cos\theta \right)$$

where c - speed of sound in fuild medium

$\omega_o$ - frequency of wave

$\theta$ - incidence angle of wave on surface

ASSIGN :

EX(1,IS) = $\theta$

so NPFC = 1

### 3c. GENERALIZED FORCE CALCULATIONS

Since the excitation is random, the program will require the calculation of the joint acceptance form of generalized force. If the mode shape description is by Fourier series, the joint acceptance can be analytically calculated in the following manner.

$$J_m^2(\omega) = \frac{1}{A^2} \sum_{p}^{MX} \sum_{q}^{NX} \sum_{p'}^{MX} \sum_{q'}^{NX} {}_mB_{pq} \; {}_mB_{p'q'} \; \cdot$$

$$\cdot \int_{x}\int_{y}\int_{x'}\int_{y'} C(x-x';y-y';\omega) \sin\left(\frac{p\pi x}{XL}\right) \sin\left(\frac{q\pi y}{YL}\right)$$

$$\cdot \; dy'\,dx'\,dy\,dx$$

The integral for the progressive wave field becomes

$$J_m^2(\omega) = \frac{1}{A^2} \sum_p \sum_q \sum_{p'} \sum_{q'} {}_m B_{pq} \; {}_m B_{p'q'}$$

$$\cdot \; VI(p, p', XL, \omega) \cdot VI(q, q', YL, \omega)$$

where

if i≠j and i+j is odd,

$$VI(i, j, l, \omega) = 0$$

If i+j is even,

$$VI(i, j, l, \omega) = \frac{2}{\pi^2} i j \left(1 - (-1)^j \cos \pi \beta\right) \Big/ (i^2 - \beta^2)(j^2 - \beta^2)$$

AND

$$\beta = l\omega / \pi C_o * \cos \Theta$$

## 4a. PRESSURE FIELD TYPE 4: POINT FORCE EXCITATION

This "pressure field" type allows a direct point excitation of the structure. While it is not a pressure field, it must have a surface uniquely associated with it to mesh with the general organization of the program.

## 4b. SURFACE PRESSURE CORRELATION EQUATIONS

$$F(x_o,\omega) = \delta(X_o - X_F)\, F(x_f,\omega)$$

where

$X_o$ - X, Y, Z COORDINATE

$X_f$ - X, Y, Z COORDINATE OF FORCE APPLICATION

$$\delta(X_o - X_f) = 0 \,,\ \text{IF } X_o \neq X_f$$
$$= 1 \,,\ \text{IF } X_o = X_f$$

$\omega$ - FREQUENCY

Assign

$$\left.\begin{aligned} EX(1,IS) &= X_f \\ EX(2,IS) &= Y_f \end{aligned}\right\}$$

both in the surface component coordinate system used in the mode shape definition.

So $NPFC = 2$

## 4c. GENERALIZED FORCE CALCULATIONS

The force description can be either deterministic or random. For deterministic excitation, the generalized force squared is

$$|Q_m^{bl}(\omega)|^2 = |F(x_f,\omega)|^2 \cdot \psi_m^2(x_f)$$

where $\psi_m(x_f)$ mode shape of structure at point $x_f$.

A modified generalized force is required in the calculation routines in the form of a joint acceptance with an associated $S_{pbl}(\omega)$:

$$J_m^f(\omega) = \psi_m^2(x_f)/A^2$$

where A is area of the surface to which the force is applied.

The $|F(x_f,\omega)|^2$ is given in the data as the external pressure, $S_{pbl}(\omega)$

Random excitation simply requires using the expected value of $|F(x_f,\omega)|^2$.

# APPENDIX D

# PROGRAM LISTING

```
.,S XX.MAIN,XX.
1DR1A  12/14/83-19:11(42,)
C**********************************************************************
C*                     VEHICAL INTERIOR NOISE PREDICTION
C*                                  (VIN)
C*
C*  VIN IS A GENERAL PURPOSE PROGRAM DESIGNED FOR STRUCTURAL/ACOUSTIC
C*  INTERACTION ANALYSIS OF PROBLEM OF THE ENCLOSED CAVITY TYPE.
C*  THE CODE IS IN ASCII LEVEL 10R1 FORTRAN. THE CODE WAS IMPLEMENTED
C*  AND TESTED ON THE UNIVAC 1108 AT THE MARSHALL SPACE FLIGHT CENTER
C*  IN HUNTSVILLE ALABAMA. ANALYSIS AND CODING BY MARK R. PETTITT FOR
C*  FOR MSFC WITH S. GUEST AND T. NESMAN TECHNICAL PROJECT OFFICERS.
C*
C*********************************************************************
      COMMON MC(1),AC(1),DAC(1)
      COMMON/STRG2$/INMUD,ISVDA(40),ISVDX(40)
      COMMON /AREA1/IOP,MOP(4),IPRE(4),IN,IOUT
      COMMON/AREA2/L0,L1,L2,L3,L4,L5,L6,L7,L8,L9,L10,L11,L12,L13,
     & L14,L15,L16,L17,L18
      COMMON/AREA3/ZERO,EPS,BW
      COMMON/AREA4/NFV,NFS,NPFCT,NTOBT,NVT,NST,MXVT,MXST,NAMT,
     & NSMT,MXT,NXT,NAMMCT,NSEACT
      COMMON/AREA5/NPROB,NPROBN,MTAPE,NTAPE,LBAND,MBAND,IHBAND
      COMMON/AREA6/NMO,NG,DFQY,NI,ER
      COMMON/AREA7/WI,WF,NWS
      COMMON/AREA8/RO,CO,VOL,PREF,PI
      COMMON/AREA9/FAC,PSI,DPI,DN,UP
      DOUBLE PRECISION DAC
      CHARACTER*8 DATCD
      CHARACTER*8 UN
      PI=3.1415926
      IN=5
      IOUT=6
C****  INITIALIZE CONSTANTS
      DATA WI,WF,NWS/0.0,0.0,0/
      DATA NAMMC,NOO,NOM,NMO,NG,DFQY,NI,ER/0,0,0,0,0,0.0,0,0.0/
C****
C*****   ASSIGN FILE REFERENCE NUMBERS ***********************
      L0=10
      L1=11
      L2=12
      L3=13
      L4=14
      L5=15
      L6=16
      L7=17
      L8=18
      L9=19
      L10=20
      L11=21
      L12=22
      L13=23
      L14=24
      L15=25
      L16=26
      L17=27
      L18=28
```

ORIGINAL PAGE IS
OF POOR QUALITY

```
C***********************LOAD DATA CARDS A-E1*********************
      CALL DATALD(MC(IIVTYP),AC(IV),AC(IVTM),AC(IVNODC),AC(IV
     &ORG),AC(IWM),MC(IISTYP),AC(IAREA),AC(ISTM),
     &AC(ISNODC),AC(ISORG),MC(IISV),MC(IMASSU),AC(ISC),AC(IBPC),
     &MC(IISUPC),MC(IIVOLC),AC(ICENTF),MC(INSTOR),MC(INSDAT),AC(IZMDAT),
     &AC(IZNDAT),MC(IIPF),AC(ISPL),AC(IEX),AC(IGNODE),AC(IOTM),
     &AC(IONODC),AC(IOORG),AC(IAREAO),MC(IIGEMO),MC(IIOCM),MC(IISEAO),MC(
     &(IIOTYP),MC(IIFE),NAM,NV,MXV,NSMX,NS,MXS,NMS,MNSS,NTOB,NAMMC,NN,
     &NSC,NOM,MX,NX,MFE,AC(IWMA),MC(INM),NOO,NSEAC,NPFC,NAS,
     & AC(IBNCWN),MC(IIFEN))
      IF(MOP(1).EQ.0)DATCD='DELETE'
      IF(MOP(1).GT.0)DATCD='KEEP'
      UN='UNKNOWN'
      IF(NPROB.EQ.0.AND.MOP(1).EQ.1)UN='NEW'
C********* DEFINE ALL MASS STORAGE FILES ************
      MNR=NFV
      MRS=MXVT*3*NVT+3*NVT+3*3*NVT+3*NVT+NVT+(MXST*3*NST+3*3*NST+3*NST+
     &  NST)*2+NVT+NST+NST+NST*2+NST+NST*10+NST+NTOBT+NST+NST+NN*3+
     & NST*MXST*2+NVT*MXVT+NTOBT*2
      OPEN(L1,FILE='L1',ACCESS='DIR',RECL=MRS,RCDS=MNR,STATUS=UN)
      MNR=NFV*3
      IL=NST*NAMT
      IL1=4*NAMT*NVT
      MRS=MAX0(IL,IL1)
      IL=NTOBT*NST
      MRS=MAX0(MRS,IL)
      OPEN(L2,FILE='L2',ACCESS='DIR',RECL=MRS,RCDS=MNR,STATUS=UN)
      IF(NAMT.EQ.0) GOTO 3
      MNR=3*NFV
      MRS=NAMT
      OPEN(L3,FILE='L3',ACCESS='DIR',RECL=MRS,RCDS=MNR,STATUS=UN)
      MNR=NFV
      MRS=NVT*NAMT
      OPEN(L4,FILE='L4',ACCESS='DIR',RECL=MRS,RCDS=MNR,STATUS=UN)
      MNR=NAMT*NVT*NFV
      MRS=NAMMCT
      IF(NAMMCT.NE.0)
     &OPEN(L5,FILE='L5',ACCESS='DIR',RECL=MRS,RCDS=MNR,STATUS=UN)
      MNR=NVT*NFV
      MRS=NAMT
      IF(NAMT.NE.0)
     &OPEN(L6,FILE='L6',ACCESS='DIR',RECL=MRS,RCDS=MNR,STATUS=UN)
      MNR=NFV*NSMT*NST
      MRS=NAMT
      IF(NAMT.NE.0)
     &OPEN(L7,FILE='L7',ACCESS='DIR',RECL=MRS,RCDS=MNR,STATUS=UN)
    3 CONTINUE
      MNR=4*NFS
      MRS=NTOBT
      OPEN(L8,FILE='L8',ACCESS='DIR',RECL=MRS,RCDS=MNR,STATUS=UN)
      MNR=2*NFS
      MRS=NSMT*3
      IF(NSMT.EQ.0)GOTO 4
      OPEN(L9,FILE='L9',ACCESS='DIR',RECL=MRS,RCDS=MNR,STATUS=UN)
      MNR=NFS*NSMT
      MRS=NTOBT
      OPEN(L10,FILE='L10',ACCESS='DIR',RECL=MRS,RCDS=MNR,STATUS=UN)
```

```
      MNR=NFS
      MRS=MXT*NXT*NSMT
    4 CONTINUE
      IF(MXT.NE.0)
     &OPEN(L12,FILE='L12',ACCESS='DIR',RECL=MRS,RCDS=MNR,STATUS=UN)
      MNR=NFS
      MRS=NSEACT*NTOBT
      IF(NSEACT.NE.0)
     &OPEN(L13,FILE='L13',ACCESS='DIR',RECL=MRS,RCDS=MNR,STATUS=UN)
      MNR=3*NFS
      MRS=NTOBT
      OPEN(L14,FILE='L14',ACCESS='DIR',RECL=MRS,RCDS=MNR,STATUS=UN)
      MNR=NFS
      MRS=NTOB*2
      OPEN(L15,FILE='L15',ACCESS='DIR',RECL=MRS,RCDS=MNR,STATUS=UN)
      MNR=NAM
      MRS=NOO*NMO
      IF(NOO.NE.0)
     &OPEN(L16,FILE='L16',ACCESS='DIR',RECL=MRS,RCDS=MNR,STATUS=UN)
      MNR=NOO*2
      MRS=NAM*NMO
      IF(NMO.NE.0)
     &OPEN(L17,FILE='L17',ACCESS='DIR',RECL=MRS,RCDS=MNR,STATUS=UN)
C        FILE L18 DEFINED IN DATALD IF NEEDED UNDER SECTION 0.
C****  ALLOCATE SPACE FOR ARRAYS THAT ARE USED BOTH IN THE MODAL
C****  AND SEA PORTIONS OF THE PROGRAM
    5 IL=MXS*3*NS+NS+NS*NSC+NMS*NPFC+NTOB*NSEAC+MXS*3*NOO+NOO+NTOB+
     & NTOB+NS*NTOB
      CALL ALLOC(AC,IL)
      ISNODC=IL+1
      IAREA=ISNODC+MXS*3*NS
      ISC=IAREA+NS
      IEX=ISC+NS*NSC
      IWMH=IEX+NMS*NPFC
      IONODC=IWMH+NTOB*NSEAC
      IAREAO=IONODC+MXS*3*NOO
      ICENTF=IAREAO+NOO
      IZMDAT=ICENTF+NTOB
      IZNDAT=IZMDAT+NTOB
      IL1=NS+NMS*MNSS+NS+NOO+NOO*2+NMS+NMS+NMS+NMS
      CALL IALLOC(MC,IL1)
      IISTYP=IL1+1
      IMASSU=IISTYP+NS
      IISV=IMASSU+NMS*MNSS
      IIOTYP=IISV+NS
      IIGEMO=IIOTYP+NOO
      INSDAT=IIGEMO+NOO*2
      INSTOR=INSDAT+NMS
      IISEAO=INSTOR+NMS
      IIPF=IISEAO+NMS
C****  ALLOCATE SPACE FOR THOSE ARRAYS TO BE USED IN THE MODAL ANALYSIS
C****  PORTION OF VIN ONLY
      M=NV*NAM
      IF(M.LT.NSMX)M=NSMX
      IL2=3*3*NS+3*NS+3*3*NOO+3*NOO+MXV*3*NV+3*3*NV+3*NV+NV+NN*3+NAM+
     & 4*NAM*NV+NAM*NV+3*NSMX+3*NMO*NOO+NTOB+NSMX+M+MX*NX*
     &NSMX+NTOB*2+NTOB*2+NTOB
```

```
       CALL ALLOC(AC,IL2)
       ISTM=IL2+1
       ISORG=ISTM+3*3*NS
       IOTM=ISORG+3*NS
       IOORG=IOTM+3*3*NOO
       IVNODC=IOORG+3*NOO
       IVTM=IVNODC+MXV*3*NV
       IVORG=IVTM+3*3*NV
       IV=IVORG+3*NV
       IGNODE=IV+NV
       IWNMC=IGNODE+NN*3
       IWN=IWNMC+NAM
       IRMN=IWN+4*NAM*NV
       IWM=IRMN+NV*NAM
       IWMO=IWM+3*NSMX
       ISPL=IWMO+3*NMO*NOO
       IBNDWN=ISPL+NTOB
       IBNDWM=IBNDWN+NTOB*2
       IZM=IBNDWM+NTOB*2
       IAMN=IZM+NSMX
       IBPQ=IAMN+M
       ISPLT=IBPQ+MX*NX*NSMX
       IF(NG.EQ.0)MCP=0
       IF(NG.NE.0)MCP=(NAM/NG+1)*NV
       IL3=MXS*NS+MXV*NV+MXS*NOO+NV+NMS+NAM+NMS+MFE+MCP*NV
       CALL IALLOC(MC,IL3)
       IISURC=IL3+1
       IIVOLC=IISURC+MXS*NS
       IIOCM=IIVOLC+MXV*NV
       IIVTYP=IIOCM+MXS*NOO
       INM=IIVTYP+NV
       IINDPN=INM+NMS
       IIFE=IINDPN+NAM
       IIFEN=IIFE+NMS
       IIOPMD=IIFEN+MFE
       CALL DATAL(MC(IIVTYP),AC(IV),AC(IVTM),AC(IVNODC),AC(IV
     &ORG),AC(IWM),MC(IISTYP),AC(IAREA),AC(ISTM),
     &AC(ISNODC),AC(ISORG),MC(IISV),MC(IMASSU),AC(ISC),AC(IBPQ),
     &MC(IISURC),MC(IIVOLC),AC(ICENTF),MC(INSTOR),MC(INSDAT),AC(IZMDAT),
     &AC(IZNDAT),MC(IIPF),AC(ISPL),AC(IEX),AC(IGNODE),AC(IOTM),
     &AC(IONODC),AC(IOORG),AC(IAREAO),MC(IIGEMO),MC(IIOCM),MC(IISEAO),M
     &(IIOTYP),MC(IIFE),NAM,NV,MXV,NSMX,NS,MXS,NMS,MNSS,NTOB,NAMMC,NN,
     &NSC,NOM,MX,NX,MFE,AC(IWMH),MC(INM),NOO,NSEAC,NPEC,NAS,
     & AC(IBNDWN),MC(IIFEN))
       IF(LBAND.EQ.MBAND)GOTO 65
       LN=1
       CALL FROCAL(AC(IWN),AC(IWMO),AC(IWM),AC(IW1),AC(IW2),AC(IW3),
     &AC(IW4),MC(INM),IPRE,AC(IVNODC),AC(IONODC),AC(ISNODC),
     &AC(ICENTF),MC(INSDAT),MC(INSTOR),MC(IIVTYP),MC(IIOTYP),
     &MC(IISTYP),AC(ISC),MC(IIFE),NAM,NV,NMO,NOO,NSMX,NMS,NS,MXV,
     &MXS,MBAND,CO,PI,NFS,NTOB,NSC,IOP,L8,L9,MXM,LN)
       IL4=4*MXM
       CALL ALLOC(AC,IL4)
       IW1=IL4+1
       IW2=IW1+MXM
       IW3=IW2+MXM
       IW4=IW3+MXM
```

```
      LN=2
      CALL FRQCAL(AC(IWN),AC(IWMO),AC(IWM),AC(IW1),AC(IW2),AC(IW3),
     &AC(IW4),MC(INM),IPRE,AC(IVNODC),AC(IONODC),AC(ISNODC),
     &AC(ICENTF),MC(INSDAT),MC(INSTOR),MC(IIVTYP),MC(IIOTYP),
     &MC(IISTYP),AC(ISC),MC(IIFE),NAM,NV,NMO,NOO,NSMX,NMS,NS,MXV,
     &MXS,MBAND,CO,PI,NFS,NTOB,NSC,IOP,L8,L9,MXM,LN)
      CALL FREE(AC,IL4)
      IF(NV.EQ.1.OR.IPRE(1).EQ.1) GOTO 10
      N=NOM*NOO
      N1=N-1
      IL4=NOM*NOO+2*(NAM*NMO)+NMO+NMO
      CALL ALLOC(AC,IL4)
      IEIMTX=IL4+1
      IVLNM=IEIMTX+NOM*NOO
      IVLNM1=IVLNM+NAM*NMO
      IVAL=IVLNM1+NAM*NMO
      ITOT=IVAL+NMO
      IL4A=N**2+N1*N
      WRITE(6,*)DFQY,DFQY,DFQY
      CALL DALLOC(DAC,IL4A)
      ID=1+IL4A
      IA=ID+N**2*4
      WRITE(6,*)DFQY,DFQY
      LN=1
      IF(NPROB.NE.0)GOTO 101
      CALL PRMCAL(AC(IVLNM1),AC(IBPQ),AC(IVMNPA),AC(IRMN),AC(IVLNM),
     &AC(ICN),AC(IZANN),AC(IRJA),AC(IAMN),AC(IWMO),AC(IOTM),AC(IOORG),
     &AC(IONODC),AC(IWM),AC(ISTM),AC(ISORG),AC(ISNODC),AC(IWNMC),
     &AC(IWN),AC(IVTM),AC(IVORG),AC(IVNODC),MC(IIGEMO),MC(IISV),
     &MC(IIOTYP),MC(IISTYP),MC(IIVTYP),MC(IMASSU),MC(INM),MC(INSDAT),
     &MC(INSTOR),AC(IBNDWM),AC(IBNDWN),AC(ICENTF),AC(IZNDAT),MC(IIFE),
     &AC(IEX),AC(IPNMC),MC(IINDPN),AC(IAREA),AC(IAREAO),NOM,NOO,NAM,
     &NMS,MX,NX,NS,MNSS,NTOB,NSMX,NPFC,MXS,NV,MXV,NAMMC,NMO
     &,AC(IV),AC(ISC),NSC,AC(IZMDAT),AC(IZM),LN)
  101 CONTINUE
      WRITE(6,*)DFQY
      CALL MULCV(AC(IWNMC),AC(IEIMTX),DAC(IA),DAC(ID),
     &AC(IVLNM),AC(IVLNM1),AC(IWN),AC(IWMO),MC(IIGEMO),AC(IAREAO),
     &AC(IV),AC(ICENTF),NAM,NAMMC,NOO,NOM,N1,N,NMO,NV,N1,DFQY,NTOB,
     &LBAND,MBAND,L16,L17,MC(IIOPMD),MCP,NG,AC(IVAL),AC(ITOT))
      CALL FREE(AC,IL4)
      CALL DFREE(DAC,IL4A)
C****     ALLOCATE SPACE FOR THE MODAL ANALYSIS PARAMETER CALCULATIONS
   10 I1=0
      IF(IOP.EQ.2.OR.IOP.EQ.4)I1=1
      NIP=0
      N=NTOB
      N1=NTOB
      IF(I1.EQ.1)N1P=NWS
      IF(I1.EQ.1)N=NWS
      IF(I1.EQ.1)N1=0
      IL4=NAMMC+NAM+NAM+NAM+NTOB+NS*NAM+N+N*NV+N1+N1*NV+N1P
      CALL ALLOC(AC,IL4)
      IPNMC=IL4+1
      IZANN=IPNMC+NAMMC
      IVMNPA=IZANN+NAM
      IVLNM=IVMNPA+NAM
```

ORIGINAL PAGE IS
OF POOR QUALITY

```
      IRJA=IVLNM+NAM
      ICN=IRJA+NTOB
      IANS=ICN+NS*NAM
      IANSS=IANS+N
      IBNS=IANSS+N*NV
      IBNSS=IBNS+N1
      IIBNO=IBNSS+N1*NV
      IF(NV.EQ.1.OR.IPRE(1).EQ.1) GOTO 20
      IL5=NAM*NMO+NAM*NOM
      CALL ALLOC(AC,IL5)
      IVLNMO=IL5+1
      IEIMTX=IVLNMO+NAM*NMO
      CALL VPNMC(AC(IWNMC),AC(IWN),NAM,NV,MC(IIGEMO),NOO,NOM,AC(IAREAO
     &),NMO,AC(IEIMTX),AC(IPNMC),MC(IINDPN),NAMMC,AC(IVLNM),AC(IV),
     &NPROBN,NAMT,NVT,L5,L6,L16,L17,MC(IIOPMD),MCP,NG)
      CALL FREE(AC,IL5)
C****   CALCULATE THE REQUIRED MODAL ANALYSIS PARAMETERS AND PLACE ON
C****   CORRECT MASS STORAGE FILES
   20 LN=2
      CALL PRMCAL(AC(IVLNMO),AC(IBPQ),AC(IVMNPA),AC(IRMN),AC(IVLNM),
     &AC(ICN),AC(IZANN),AC(IRJA),AC(IAMN),AC(IWMO),AC(IOTM),AC(IOORG),
     &AC(IONODC),AC(IWM),AC(ISTM),AC(ISORG),AC(ISNODC),AC(IWNMC),
     &AC(IWN),AC(IVTM),AC(IVORG),AC(IVNODC),MC(IIGEMO),MC(IISV),
     &MC(IIOTYP),MC(IISTYP),MC(IIVTYP),MC(IMASSU),MC(INM),MC(INSDAT),
     &MC(INSTOR),AC(IBNDWM),AC(IBNDWN),AC(ICENTF),AC(IZNDAT),MC(IIPF),
     &AC(IEX),AC(IPNMC),MC(IINDPN),AC(IAREA),AC(IAREAO),NOM,NOO,NAM,
     &NMS,MX,NX,NS,MNSS,NTOB,NSMX,NPFC,MXS,NV,MXV,NAMMC,NMO
     &,AC(IV),AC(ISC),NSC,AC(IZMDAT),AC(IZM),LN)
      CALL BNDCAL(AC(IBNDWN),AC(IBNDWM),AC(IWNMC),AC(IWM),AC(IZMDAT),
     &AC(IZANN),MC(INM),AC(ICENTF),MC(INSTOR),NS,NTOB,NAM,NSMX,NMS,
     &BW,EPS,NFS,IPRE,MC(IISTYP),L8,L9,L15,MC(INSDAT),IOP,NPROB)
      LN=3
      IF(IOP.EQ.5)GOTO 15
      CALL PRMCAL(AC(IVLNMO),AC(IBPQ),AC(IVMNPA),AC(IRMN),AC(IVLNM),
     &AC(ICN),AC(IZANN),AC(IRJA),AC(IAMN),AC(IWMO),AC(IOTM),AC(IOORG),
     &AC(IONODC),AC(IWM),AC(ISTM),AC(ISORG),AC(ISNODC),AC(IWNMC),
     &AC(IWN),AC(IVTM),AC(IVORG),AC(IVNODC),MC(IIGEMO),MC(IISV),
     &MC(IIOTYP),MC(IISTYP),MC(IIVTYP),MC(IMASSU),MC(INM),MC(INSDAT),
     &MC(INSTOR),AC(IBNDWM),AC(IBNDWN),AC(ICENTF),AC(IZNDAT),MC(IIPF),
     &AC(IEX),AC(IPNMC),MC(IINDPN),AC(IAREA),AC(IAREAO),NOM,NOO,NAM,
     &NMS,MX,NX,NS,MNSS,NTOB,NSMX,NPFC,MXS,NV,MXV,NAMMC,NMO
     &,AC(IV),AC(ISC),NSC,AC(IZMDAT),AC(IZM),LN)
      WRITE(6,*)NSMX,NSMX,NSMX
      WRITE(6,*)NSMX,NSMX,NSMX,NSMX
   15 CALL MDLPRM(AC(IWNMC),AC(IVMNPA),AC(IZANN),AC(IRMN),
     &AC(IRJA),AC(IWM),MC(INM),AC(ISPL),AC(ICENTF),MC(IISTYP),
     &MC(INSTOR),NAMT,NPROBN,NFS,NTAPE,NSMX,NMS,NSMT,PREF,
     & NAM,NV,NS,NTOB,AC(IZMDAT),LBAND,MBAND,L4,L8,L9,L10)
      WRITE(6,*)NSMX,NSMX,NSMX,NSMX,NSMX
  102  CONTINUE
C**** CALCULATE THE VEHICAL INTERIOR NOISE (VIN):BAND AVERAGE
      I1=0
      IF(IOP.EQ.1.OR.IOP.EQ.3) I1=1
      IF(I1.EQ.1)CALL CALC(AC(IANS),AC(IANSS),AC(IBNS),AC(IBNSS),
     &AC(IWNMC),AC(IZANN),AC(IVMNPA),AC(IRMN),MC(INM),AC(IAREA),AC(IWM),
     &AC(IVLNM),AC(ISPL),AC(IRJA),AC(IZM),AC(ICENTF),MC(INSTOR),NV
     &,NAM,NS,NMS,NSMX
```

```
     &,NFS,NSMI,LBAND,MBAND,NTOB,NPROBN,BW,ZERO,PREF,VOL,RO,CO,PI,L7,
     &L8,L9,L10,IOUT,AC(ISPLT),MC(IISTYP),NST)
C**** CALCULATE THE VEHICAL INTERIOR NOISE (VIN):DESCRETE FREQUENCIES
      I1=0
      IF(IOP.EQ.2.OR.IOP.EQ.4)I1=1
      IF(I1.EQ.1)CALL DFCALC(AC(IANS),AC(IANSS),
     &AC(IWNMC),AC(IZANN),AC(IVMNPA),AC(IRMN),MC(INM),AC(IAREA),AC(IWM)
     &WF,WI,AC(IVLNM),AC(ISPL),AC(IRJA),AC(IZM),AC(ICENTF),MC(INSTOR),N
     &,NSMT,NAM,NS,NMS,NSMX,NFS,MC(IISTYP),NWS,NTOB,NPROBN,ZERO,PREF,
     & VOL,RO,CO,PI,NST,L7,L8,L9,L10,IOUT,BW,AC(ITBND))
C
C****  CALCULATE THE REVERBERATION TIME
      IF(IOP.EQ.6)  CALL REVERB(AC(IWNMC),AC(ICN),AC(IZNDAT),AC(IZNDI),
     &AC(IVMNPA),AC(ICENTF),NAM,NTOB,LBAND,MBAND,NS,RO,CO,VOL,BW,NPROBN
     &,DI,NEV,AC(ICZANN),IOUT,L2)
C*****************************************************************
C*****************************************************************
C****  TRANSITION TO SEA EQUATIONS
      CALL FREE(AC,IL4)
   65 CALL IFREE(MC,IL3)
      WRITE(6,*)IHBAND,IHBAND
      CALL FREE(AC,IL2)
      WRITE(6,*)LBAND,LBAND
      IF(MBAND.EQ.IHBAND)GOTO 100
      IF(IOP.NE.1)GOTO 100
C****
      NV1=NV+1
      IL4=(NS*NTOB)*2+NV+NMS*NTOB+NTOB*NV
     & +NMS*NTOB
      CALL ALLOC(AC,IL4)
      IRJA=IL4+1
      IRJARV=IRJA+NS*NTOB
      ISPL=IRJARV+NS*NTOB
      IANSS=ISPL+NTOB*NMS
      IZMD1=IANSS+NV*NTOB
      IL5=NMS*NTOB
      CALL IALLOC(MC,IL5)
      IMD=IL5+1
      IL5A=NV*NV1
      CALL DALLOC(DAC,IL5A)
      IC=IL5A+1
      CALL HFREQ(AC(IRJA),AC(ISPL),AC(ICENTF),AC(IAREA),
     &AC(IAREAO),MC(IMD),AC(IZMD1),MC(IMASSU),AC(IRJARV),
     &AC(IZNDAT),MC(IIOTYP),MC(IIGEMO),MC(IISV),DAC(IC
     &),NV,NV1,IHBAND,NTOB,NS,NOO,NMS,MNSS,BW,NFS,AC(IAN
     &SS),AC(IEX),MBAND,AC(IWMH),MC(INSDAT),MC(INSTOR),MC(IISEAO),MC(I
     &IPF),NEV,NSEAC,NPFC,NPROBN,MOP,L2,L8,L13,L14)
      CALL SEAPRM(AC(IRJA),AC(IRJARV),MC(IMD),
     & AC(IZMD1),AC(ICENTF),AC(ISPL),MBAND,IHBAND,NTOB,NMS,NIAPE,
     & MC(INSTOR),AC(IZNDAT),IOUT,NS,MC(IISEAO))
      CALL SEARES(NVOL,NV,PREF,NTOB,MBAND,IHBAND,AC(IANSS),
     &AC(ICENTF),IOUT)
  100 CONTINUE
  110 CONTINUE
      DO 111 I=10,28
  111 CLOSE(I,STATUS=DATCD)
      CALL EXIT
```

398. END

ORIGINAL PAGE IS
OF POOR QUALITY

```
,S  XX.DATALD,XX.
1OR1A   12/14/83-18:38(34,)
C*****************************************************************************
      SUBROUTINE DATALD(IVTYP,V,VTM,VNODC,VORG,
     *WM,ISTYP, AREA,STM,SNODC,SORG,ISV,MASSUR,SC,BPQ,ISURCM,
     *IVOLCM,CENTF,NSTOR,NSDAT,ZMDATA,ZNDATA,IPF,SPL,EX,GNODE,
     * OTM,ONODC,OORG,AREAO,IGEMOV,IOCM,ISEAO,IOTYP,IFE,
     *NAM,NV,MXV,NSMX,NS,MXS,NMS,MNSS,NTOB,NAMMC,NN,NSC,
     *NOM,MX,NX,MFE,WMH,NM,NOO,NSEAC,NPFC,NAS,BNDWN,IFEN)
      COMMON MC(1),AC(1)
      COMMON /AREA1/IOP,MOP(4),IPRE(4),IN,IOUT
      COMMON/AREA2/L0,L1,L2,L3,L4,L5,L6,L7,L8,L9,L10,L11,L12,L13,
     & L14,L15,L16,L17,L18
      COMMON/AREA3/ZERO,EPS,BW
      COMMON/AREA4/NFV,NFS,NPFCT,NTOBT,NVT,NST,MXVT,MXST,NAMT,
     & NSMT,MXT,NXT,NAMMCT,NSEACT
      COMMON/AREA5/NPROB,NPROBN,MTAPE,NTAPE,LBAND,MBAND,IHBAND
      COMMON/AREA6/NMO,NG,DFQY,NI,ER
      COMMON/AREA7/WI,WF,NWS
      COMMON/AREA8/RO,CO,VOL,PREF,PI
      COMMON/AREA9/FAC,PSI,DPI,DN,UP
      DOUBLE PRECISION FAC(57),PSI(60),DPI,DN,UP
      DIMENSION IVTYP(NV),V(NV),VTM(3,3,NV),
     *VNODC(MXV,3,NV),VORG(3,NV),WM(3,NSMX),
     *ISTYP(NS),AREA(NS),STM(3,3,NS),SNODC(MXS,3,NS),
     *SORG(3,NS),ISV(NS),MASSUR(MNSS,NMS),SC(NSC,NS),BPQ(MX,
     *NX,NSMX), ISURCM(MXS,NS),IVOLCM(MXV,NV),CENTF(NTOB),NSTOR(NMS)
      DIMENSION NSDAT(NMS),ZMDATA(NTOB),SPL(NTOB),ZNDATA(NTOB,NS),
     & WMH(NSEAC,NTOB),EX(NPFC,NMS),NM(NMS),GNODE(NN,3),OTM(3,3,NOO),
     & ONODC(MXS,3,NOO),OORG(3,NOO),AREAO(NOO),IGEMOV(2,NOO),
     & ISEAO(NMS),IOCM(MXS,NOO),IOTYP(NOO),IPF(NMS),IFE(NMS)
     & ,BNDWN(NTOB,2),IFEN(MFE)
      CHARACTER*80 TITLE
      CHARACTER*75 STITLE
      CHARACTER*10 UN
      DATA DPI/3.14159263589793D0/,UP,DN/1.0000005D0,0.9999995D0/
       INP=5
       IOUT=6
      PI=3.1415926
      IN=5
      READ(IN,5)TITLE
    5 FORMAT(A80)
      READ(IN,10)STITLE
   10 FORMAT(A75)
      WRITE(IOUT,15)TITLE
   15 FORMAT('1',A80)
      WRITE(IOUT,20)STITLE
   20 FORMAT(5X,A75)
C**** A. OPTION SELECTION
      READ(IN,*)IX
      READ(IN,*)IOP
      READ(IN,*)MOP
      READ(IN,*)IPRE
      READ(IN,*)NPROB,NPROBN,MTAPE,NTAPE
      UN='UNKNOWN'
      IF(NPROB.EQ.0.AND.MOP(1).EQ.1)UN='NEW'
      OPEN(L0,FILE='L0',ACCESS='DIR',RECL=40,RCDS=60,STATUS=UN)
```

```
C*** SECTION FOR  TAPE READ OF FIRST FILE ****
       IF(NPROB.EQ.0)GOTO 21
       IR=1
       READ(LO'IR)NTAPE,NFV,NFS,NPFCT,NTOBT,NVT,NST,MXVT,
      & MXST,NAMT,NSMT,MXT,NXT,NAMMCT,NSEACT,NPA,NSA
       IR=1+NPROB
       READ(LO'IR)NN,NS,NMS,MNSS,NAS,MXS,NSMX,NSC,NV,MXV,
      & NAM,NTOB,MFE,MX,NX,NSEAC,NPFC,NWS,NOO,LBAND,MBAND,IHBAND,RO,CO,
      &VOL,PREF,ZERO,EPS,BW
C**** B.SIZING PARAMETERS FOR NEW DATA FILE
    21 READ(IN,*)IX
       IF(IX.EQ.0) GO TO 25
       READ(IN,*)NFV,NFS,NPFCT,NTOBT,NVT,NST,MXVT,MXST,NAMT,
      & NSMT,MXT,NXT,NAMMCT,NSEACT
   25  CONTINUE
C**** C.RANGE : FREQUENCY DOMAIN
       READ(IN,*)IX
       IF(IX.EQ.0)GOTO26
       READ(IN,*)LBAND,MBAND,IHBAND,BW
C****  D. RANGE : DESCRETE FREQUENCY
    26 READ(IN,*)IX
       IF(IX.EQ.0) GOTO 30
       READ(IN,*)WI,WF,NWS
   30  CONTINUE
C**** E.TOLERANCES
       READ(IN,*)IX
       IF(IX.EQ.0) GOTO 35
       READ(IN,*) ZERO,EPS
    35 CONTINUE
       IF(NPROB.EQ.0) GO TO 40
       WRITE(6,*)NTAPE,NFV,NFS,NSEACT,NN,NS,NMS,NWS
C****
C**** F. MATRIX SIZING PARAMETERS
   40  READ(IN,*)IX
       IF(IX.EQ.0) GO TO 45
       READ(IN,*)NN,NS,NMS,MNSS,NAS,MXS,NSMX,NSC,NV,MXV,NAM,NTOB,
      &MFE,MX,NX,NSEAC,NPFC
C**** G.  MULTIPLE CAVITY PARAMETERS
   45  READ(IN,*) IX
       IF(IX.EQ.0) GO TO 50
       READ(IN,*)NAMMC,NOO,NOM,NMO,NG,DFQY,NI,ER
  50    RETURN
       ENTRY DATAL(IVTYP,V,VTM,VNODC,VORG,
      *WM,ISTYP, AREA,STM,SNODC,SORG,ISV,MASSUR,SC,BPQ,ISURCM,
      *IVOLCM,CENTF,NSTOR,NSDAT,ZMDATA,ZNDATA,IPF,SPL,EX,GNODE,
      * OTM,ONODC,OORG,AREAO,IGEMOV,IOCM,ISEAO,IOTYP,IFE,
      *NAM,NV,MXV,NSMX,NS,MXS,NMS,MNSS,NTOB,NAMMC,NN,NSC,
      *NOM,MX,NX,MFE,WMH,NM,NOO,NSEAC,NPFC,NAS,BNDWN,IFEN)
       DO 51 I=1,NMS
    51 ISEAO(I)=0
       IF(NPROB.EQ.0) GOTO 55
C************ READ FROM MASS AND PLACE INTO MEMORY ***************
       IR=NPROB
       READ(L1'IR)VNODC,VTM,VORG,IVTYP,ONODC,OTM,OORG,IOTYP,
      &SNODC,STM,SORG,ISTYP,V,AREAO,AREA,IGEMOV,ISV,MASSUR,NSDAT,CENTF
      &,IFE,ISEAO,GNODE,IOCM,ISURCM,IVOLCM,BNDWN
       DO 54 I=1,NS
```

```
   54 NSTOR(I)=NSDAT(I)
      IF(IOP.EQ.5)GOTO 55
      IR=2*NFV+NPROB
      READ(L2'IR)ZNDATA
      DO 53 I=1,NMS
      IR=NFS+NSDAT(I)
   53 READ(L8'IR)(SC(J,I),J=1,NSC)
C*********************************************************************
   55 CONTINUE
C**** H. OPENING/VOLUME RELATIONSHIPS: IGEMOV
      READ(IN,*) IX
      IF(IX.EQ.0) GO TO 65
      DO 65 IX=1, NOO
      READ(IN,*)ISUR,IGEMOV(1,ISUR),IGEMOV(2,ISUR)
   65 CONTINUE
C**** I.  OPENING DESCRIPTION
      READ(IN,*)IX
      IF(IX.EQ.0) GOTO 70
      DO 70 IX=1,NOO
      READ(IN,*)I,IOTYP(I),AREAO(I),(IOCM(J,I),J=1,MXS)
   70 CONTINUE
C****  J.  STRUCTURAL DATA FILE ACCESS AND STORAGE LOCATIONS
      READ(IN,*) IX
      IF(IX.EQ.0) GO TO  75
      READ(IN,*)(NSDAT(I),I=1,NMS)
      READ(IN,*) (NSTOR(I),I=1,NMS)
   75  CONTINUE
C****  K. GLOBAL NODE POINTS
      READ(IN,*)IX
      IF(IX.EQ.0) GO TO 80
      DO 80 IX=1,NN
      READ(IN,*) I,(GNODE(I,J),J=1,3)
   80 CONTINUE
C****  L.  SURFACE DESCRIPTION
      READ(IN,*)IX
      IF(IX.EQ.0)GO TO 85
      DO 85 IX=1,NS
      READ(IN,*) ISUR,ISTYP(ISUR),AREA(ISUR),(ISURCM(I,ISUR
     1),I=1,MXS)
   85 CONTINUE
      DO 86 I=1,NMS
      IF(NSDAT(I).EQ.0) GO TO 86
      IR=NSDAT(I)
      READ(L8'IR)NM(I)
   86 CONTINUE
C****  M.  MASTER SURFACE/SURFACE RELATIONSHIPS : ISV
      READ(IN,*)IX
      IF(IX.EQ.0) GO TO 90
      DO 90 I=1,NMS
      READ(IN,*)IS,(MASSUR(J,IS),J=1,MNSS)
   90 CONTINUE
C****  N.  STRUCTURAL CONSTANTS: MODAL ANALYSIS
      READ(IN,*)IX
      IF(IX.EQ.0)GOTO 95
      DO 95 ISUR=1,NMS
      IF(NSDAT(ISUR).EQ.0)READ(IN,*)IS, (SC(J,IS),J=1,NSC)
      IR=NFS+NSTOR(ISUR)
```

ORIGINAL PAGE IS
OF POOR QUALITY

```
      IF(NSDAT(ISUR).EQ.0)WRITE(L8'IR)(SC(J,ISUR),J=1,NSC)
      IF(NSDAT(ISUR).NE.0)READ(IN,*)IS
      IF(ISTYP(ISUR).NE.7)GOTO 95
      IF(NSDAT(ISUR).NE.0)GOTO 95
      DO 97 I=1,INT(SC(1,ISUR))
      READ(IN,*)(BPQ(1,J,I),J=1,9)
   97 BPQ(1,1,I)=BPQ(1,1,I)*2.*PI
      NM(ISUR)=NINT(SC(1,ISUR))
      IR=NSTOR(ISUR)
      WRITE(L12'IR)BPQ
      WRITE(L9'IR)((BPQ(1,J,I),J=1,3),I=1,NSMX)
   95 CONTINUE
      DO 94 IS=1,NMS
      IF(NSDAT(IS).EC.0)GOTO 94
      IR=NSDAT(IS)+NFS
      READ(L8'IR)(SC(J,IS),J=1,NSC)
   94 CONTINUE
C****  0.  STRUCTURAL MODAL DATA
      NFEDS=0
      DO 96 I=1,NMS
   96 IFE(I)=0
      READ(IN,*)IX
      IF(IX.EQ.0) GOTO 101
      READ(IN,*)NFEDS
      MNR=NFEDS
      MRS=6*MFE+2*NSMT+NSMT*3*MFE
       OPEN(L18,FILE='L18',ACCESS='DIR',RECL=MRS,RCDS=MNR,STATUS=UN)
      MMAX=(1.*MFE)**.5*1.5
      NMAX=MMAX
C*** ASSIGN CORE STORAGE
      IF(MOP(4).NE.1)IL=MFE+MFE+NSMX*3*MFE+MMAX+NMAX+MMAX*NMAX+MFE
     & +MFE+MFE
      IF(MOP(4).EQ.1)IL=MFE+MFE+MFE+MFE+NSMX*3*MFE
      CALL ALLOC(ARK,IL)
      ID1=IL+1
      ID2=ID1+MFE
      ID3=ID2+MFE
      IVM=ID3+MFE
      ISN=IVM+MFE
      IX1=ISN+NSMX*MFE*3
      IX2=IX1+MMAX
      IY=IX2+NMAX
      ITK=IY+MMAX*NMAX
      DO 99 I=1,NMS
      READ(IN,*)IS,IFE(IS),NFEN,SL1,SL2
      IF(IFE(IS).EQ.0)GOTO 99
      READ(IN,*)(IFEN(J),J=1,NFEN)
C*** TEMPORARILY USE STM AND SORG TO TRANSLATE F.E. GLOBAL COORDINATES
C*** TO SURFACE LOCAL COORDINATES
      READ(IN,*)(STM(1,K,IS),K=1,3),SORG(1,IS)
      READ(IN,*)(STM(2,K,IS),K=1,3),SORG(2,IS)
      READ(IN,*)(STM(3,K,IS),K=1,3),SORG(3,IS)
      CALL FEDAT(IS,NFEN,NFEDS,NS,NMS,IFE,IFEN,ISTYP,STM,SORG,WM,NSTOR,
     & BPQ,MOP,AREA,AC(ID1),AC(ID2),AC(ID3),AC(IVM),AC(ISN),AC(IX1),
     & AC(IX2),AC(ITK),AC(IY),MX,NX,MFE,NSMX,SL1,SL2,MMAX,NMAX,L9,L12
     & ,L18)
   99 CONTINUE
```

ORIGINAL PAGE IS
OF POOR QUALITY

```
      101 CONTINUE
     C****  P.  STRUCTURAL  CONSTANTS: STATISTICAL  ENERGY  ANALYSIS
          READ(IN,*)IX
          IF(IX.EQ.0)GOTO 110
          DO 110 IS=1,NMS
          DO 109 I=1,NSEAC
          DO 109 J=1,NTOB
      109 WMH(I,J)=0.0
          READ(IN,*) ISUR,ISEAO(ISUR)
          IF(NSDAT(ISUR).NE.0)GOTO 110
          IF(ISEAO(ISUR).EQ.0)GOTO 110
          DO 105 NOB=1,NTOB
          READ(IN,*)K,(WMH(J,K),J=1,NSEAC)
          IF(WMH(1,NOB).LT.0.0) GOTO 106
      105 CONTINUE
     C**STORE DATA IN APPROPRIATE MASS STORAGE FILE
      106 IR=NSTOR(IS)
          WRITE(L13'IR)WMH
     C
      110 CONTINUE
     C****  Q.  VOLUME DESCRIPTION
          READ(IN,*) IX
          IF(IX.EQ.0)GOTO 115
          VOL=0.0
          DO 115 I=1,NV
          READ(IN,*)NVOL,IVTYP(NVOL),V(NVOL),(IVOLCM(J,NVOL),J=1,MXV)
          VOL=VOL+V(NVOL)
      115 CONTINUE
     C****  R.  ACOUSTIC CONSTANTS
          READ(IN,*)IX
          IF(IX.EQ.0) GOTO 120
          READ(IN,*)RO,CO,PREF
      120 CONTINUE
     C****  S.  ACOUSTIC MODAL DATA
          READ(IN,*)IX
     C****     NOT YET ALLOWED BY PROGRAM
     C****
     C****  T.  SURFACE/VOLUME RELATIONSHIPS
          READ(IN,*)IX
          IF(IX.EQ.0)GOTO 130
          DO 130 I=1,NS
          READ(IN,*)ISUR,ISV(ISUR)
      130 CONTINUE
     C****  U.  SURFACE ABSORPTION
          READ(IN,*)IX
          IF(IX.EQ.0)GOTO 136
      134 DO 135 I=1,NS
          READ(IN,*) ISUR,IX
          IF(IX.EQ.0) GOTO 135
          READ(IN,*) (ZNDATA(J,ISUR),J=1,NTOB)
      135 CONTINUE
          IR=2*NFV+NPROBN
          WRITE(L2'IR)ZNDATA
     C****  V.  STRUCTURAL DAMPING
      136 READ(IN,*)IX
          IF(IX.EQ.0) GOTO 140
          DO 140 I=1,NMS
```

ORIGINAL PAGE IS
OF POOR QUALITY

```
            READ(IN,*)ISUR,IX
            IF(IX.EQ.0) GOTO 140
            READ(IN,*)(ZMDATA(J),J=1,NTOB)
            IR=2*NFS+NSTOR(I)
            WRITE(L8'IR) ZMDATA
        140 CONTINUE
      C****  W.  EXTERNAL SOUND PRESSURE LEVEL: FREQUENCY DOMAIN
            READ(IN,*)IX
            IF(IX.EQ.0)GOTO 145
            DO 145 I=1,NMS
            READ(IN,*)ISUR,IX
            IF(IX.EQ.0) GOTO 145
            READ(IN,*)(SPL(J),J=1,NTOB)
            IR=3*NFS+NSTOR(I)
            WRITE(L8'IR) SPL
        145 CONTINUE
      C****  X.  EXTERNAL PRESSURE FIELD DESCRIPTION CONSTANTS
            READ(IN,*)IX
            IF(IX.EQ.0) GOTO 150
            DO 150 I=1,NMS
            READ(IN,*)ISUR,IPF(ISUR)
            IF(IPF(ISUR).EQ.0) GOTO 150
            READ(IN,*)(EX(J,ISUR),J=1,NPFC)
        150 CONTINUE
      C****  Y.  BAND CENTER FREQUENCIES
            READ(IN,*)IX
            IF(IX.EQ.0) GOTO 155
            READ(IN,*) (CENTF(NOB),NOB=1,NTOB)
            DO 155 I=1,NTOB
            CENTF(I)=CENTF(I)*2.0*PI
        155 CONTINUE
      C****  Z.  REVERBERATION TIME
      C****
            READ(IN,*)IX
            IF(IX.EQ.0) GOTO 156
      C****   GENERATE COORDINATE SYSTEM TRANSFORMATION MATRICIES
        156 CONTINUE
            IF(IPRE(1).EQ.1) GOTO 1110
            CALL TRANS
            CALL OTRANS
      C****    OUTPUT THE INPUT DATA
       1110 CONTINUE
            IF(NPROB.EQ.0) NPA=0
            IF(NPROB.EQ.0) NSA=0
            DO 1200 IS=1,NMS
            IF(NSDAT(IS).EQ.0.AND.NSTOR(IS).NE.0.AND.NPROB.NE.NPROBN)NSA=NSA+
       1200 CONTINUE
            IF(NPROB.NE.NPROBN)NPA=NPA+1
            IR=1
            WRITE(L0'IR)NTAPE,NFV,NFS,NPFCT,NTOBT,NVT,NST,MXVT,MXST,
           & NAMT,NSMT,MXT,NXT,NAMMCT,NSEACT,NPA,NSA
            IR=1+NPROBN
            WRITE(L0'IR)NN,NS,NMS,MNSS,NAS,MXS,NSMX,NSC,NV,MXV,NAM,NTOB,
           & MFE,MX,NX,NSEAC,NPFC,NWS,NOO,LBAND,MBAND,IHBAND,RO,CO,
           &VOL,PREF,ZERO,EPS,BW
            DO 1300 IS=1,NMS
            IR=1+10+NSTOR(IS)
```

```
      IF(NSTOR(IS).NE.0)WRITE(LO'IR)ISTYP(IS),NM(IS),NSC,IPF(IS),LBAND
     & ,MBAND,IHBAND,NSEAC,ISEAO(IS)
 1300 CONTINUE
      WRITE(6,*)NV,NV,NV,NPROB,NPROBN
      IR=NPROBN
      WRITE(L1'IR)VNODC,VTM,VORG,IVTYP,ONODC,OTM,OORG,IOTYP,
     &SNODC,STM,SORG,ISTYP,V,AREAO,AREA,IGEMOV,ISV,MASSUR,NSTOR,CENTF
     &,IFE,ISEAO,GNODE,IOCM,ISURCM,IVOLCM,BNDWN
      DO 157 I=1,NTOB
      CENTF(I)=CENTF(I)/2./PI
  157 CONTINUE
      IF(MOP(2).EQ.0) CALL OINPUT
      J=0
      DO 158 I=1,NOO
      IF(IOTYP(I).EQ.3)J=1
  158 CONTINUE
      DO 160 I=1,NV
      IF(IVTYP(I).EQ.3)J=1
  160 CONTINUE
      IF(J.EQ.1)CALL FCTCAL
      DO 165 I=1,NTOB
      CENTF(I)=CENTF(I)*2.*PI
  165 CONTINUE
 1111 RETURN
C***********************************************************************
C***********************************************************************
      SUBROUTINE OINPUT
C*
C*  CARD INPUT IS REFLECTED TO OUTPUT DEVICE
C*
      DIMENSION INC(22),VNC(7)
      WRITE(IOUT,100)
C****  LOAD AND OUTPUT DATA SET #1.
      IR=1
      READ(LO'IR)(INC(I),I=1,17)
      WRITE(IOUT,110)(INC(I),I=1,17)
C****  LOAD AND OUTPUT DATA SET #2.
      WRITE(IOUT,120)
      DO 25 J=1,NPA
      IR=1+J
      READ(LO'IR)(INC(I),I=1,22),(VNC(I),I=1,7)
      WRITE(IOUT,130) J
      WRITE(IOUT,140) (INC(I),I=1,22),(VNC(I),I=1,7)
   25 CONTINUE
C****   LOAD AND OUTPUT DATA SET #3.
      WRITE(IOUT,150)
      DO 50 IS=1,NSA
      IR=1+10+IS
      READ(LO'IR)(INC(I),I=1,9)
      WRITE(IOUT,160)IS
      WRITE(IOUT,170)(INC(I),I=1,9)
   50 CONTINUE
C********* FORMAT STATEMENTS
  100 FORMAT(55X,'DATA FILE INDEX'/54X,'*****************')
  110 FORMAT(26X,'TAPE SIZING: DATA SET #1.'//61X,'NTAPE  - ',I3/61X,
     &'NFV    - ',I3/61X,
     *'NFS    - ',I3/61X,'NPFCT  - ',I3/61X,'NTOBT  - ',I3/61X,
```

```
     *'NVT     - ',I3/61X,'NST     - ',I3/61X,
     *'MXVT    - ',I3/61X,'MXST    - ',I3/61X,'NAMT    - ',I3/61X,
     *'NSMT    - ',I3/61X,'MXT     - ',I3/61X,'NXT     - ',I3/61X,
     *'NAMMCT  - ',I3/61X,'NSEACT  - ',I3/61X,'NPA     - ',I3/61X, 'NSA
     &- ',I3)
  120 FORMAT(//26X,'BASIC PROBLEM PARAMETERS : DATA SET #2. ')
  130 FORMAT(/34X,'PROBLEM NUMBER - ',I5)
  140 FORMAT(61X,'NN      - ',I3/61X,
     *'NS      - ',I3/61X,'NMS     - ',I3/61X,'MNSS    - ',I3/61X,'NAS -
     * ',I3/61X,'MXS     - ',I3/61X,'NSMX    - ',I3/61X,'NSC     - ',I3/61X
     *,'NV     - ',I3/61X,'MXV     - ',I3/61X,'NAM     - ',I3/61X,
     *'NTOB    - ',I3/61X,'MFE     - ',I3/61X,
     *'MX      - ',I3/61X,'NX      - ',I3/61X,'NSEAC   - ',I3/61X,
     *'NPFC    - ',I3/61X,'NWS     - ',I3/61X,'NOO     - ',I3/61X,
     &'LBAND   - ',I3/61X,'MBAND   - ',I3/61X,'IHBAND  - ',I3/61X,
     &'RO      - ',E11.5/61X,'CO      - ',E11.5/61X,'VOL     - ',E11.5
     &/61X,'PREF     - ',E11.5/61X,'ZERO     - ',E11.5/61X,'EPS     - '
     &,E11.5/61X,'BW      - ',E11.5)
  150 FORMAT(//26X,'SURFACE ELEMENTS : DATA SET #3.')
  160 FORMAT(/34X,'FILE SURFACE NUMBER - ',I5)
  170 FORMAT(61X,'ISTYP  - ',I3/61X,'NM      - ',I3/61X,'NSC     - ',I3
     &/61X,'IPF     - ',I3/61X,'LBAND  - ',I3/61X,'MBAND  - ',I3/61X,
     &'IHBAND  - ',I3/61X,'NSEAC  - ',I3/61X,'ISEAO  - ',I3)
      WRITE(IOUT,801)
  801 FORMAT(45X,'STRUCTURAL / ACOUSTIC INTERACTION ANALYSIS'/
     A44X,'*******************************************')
      WRITE(IOUT,802)
  802 FORMAT(//21X,'INPUT DATA'//27X,'A. OPTION SELECTION'//30X,'A1. ','
     *ANALYSIS: IOP')
C****  A. OPTION SELECTION
      WRITE(IOUT,803)IOP
  803 FORMAT(/34X,'IOP = ',I3)
      WRITE(IOUT,806) MOP(1),MOP(2),MOP(3),MOP(4)
  806 FORMAT(/30X,'A4. SPECIAL OPTIONS: MOP(4)'//34X,
     *'CATALOG MASS STORAGE',23X,' - ',I3/34X,'SUPRESS INPUT MIRROR',
     (23X,' - ',I3/34X,'USE EXPERIMENTAL CAVITY DAMPING',12X,' - ',I3/
     *34X,'USE SHORT BPQ CALCULATION ON NEW F.E. DATA  - ',I3)
      WRITE(IOUT,807) IPRE(1),IPRE(2),IPRE(3),IPRE(4)
  807 FORMAT(/30X,'A5. PRECALCULATED DATA: IPRE(4)'//34X,
     *ACOUSTIC RESPONSE '14X,' - ',I3/34X,'ACOUSTIC ABSORPTION'
     *,14X,'  - ',I3/34X,'S/A INTERACTION  (ALL SURFACES)  - '
     *,I3/34X,'GENERALIZED FORCE ',14X,' - ',I3)
      WRITE(IOUT,808) NPROB,NPROBN,MTAPE,NTAPE
  808 FORMAT(/30X,'A6. DATA ACCESS AND STORAGE'//34X,'NPROB   - ',I3/34X
     *'NPROBN - ',  I3/34X,'MTAPE   - ',I3/34X,'NTAPE  - ',I3)
C****  B.NEW DATA FILE SIZING PARAMETERS
      IF(NPROB.EQ.0.AND.NPROBN.EQ.0) GO TO 900
      WRITE(IOUT,809)NFV,NFS,NPFCT,NTOBT,NVT,NST,MXVT,MXST,
     & NAMT,NSMT,MXT,NXT,NAMMCT,NSEACT
  809 FORMAT('1',26X,'B. DATA TAPE SIZING'//61X,'NFV     - ',I3/61X,
     *'NFS     - ',I3/61X,'NPFCT   - ',I3/61X,'NTOBT   - ',I3/61X,
     *'NVT     - ',I3/61X,'NST     - ',I3/61X,
     *'MXVT    - ',I3/61X,'MXST    - ',I3/61X,'NAMT    - ',I3/61X,
     *'NSMT    - ',I3/61X,'MXT     - ',I3/61X,'NXT     - ',I3/61X,
     *'NAMMCT  - ',I3/61X,'NSEACT  - ',I3)
  900 CONTINUE
C**** C.RANGE : FREQUENCY DOMAIN
```

```
      WRITE(IOUT,810) LBAND,MBAND,IHBAND,BW
  810 FORMAT(8(/),27X,'C. RANGE :FREQUENCY'//61X,'LBAND  - ',I3/61X,
     *'MBAND  - ',I3/61X,'IHBAND - ',I3/61X,'BW      - ',E11.5)
C**** D. RANGE : DELCRETE FREQUENCY
      IF(IOP.EQ.2.OR.IOP.EQ.4)WRITE(IOUT,811)WI,WF,NWS
  811 FORMAT(8(/),27X,'D.  RANGE : DESCRETE FREQ. '//61X,'TI       - ',
     & E11.5/61X,'WF       - ',E11.5/61X,'NWS     - ',I3)
C**** E.  TOLERANCES
      WRITE(IOUT,812) ZERO,EPS
  812 FORMAT(8(/),27X,'E. TOLERANCES'//56X,'ZERO  - ',E12.5/56X,
     *'EPS    -  ',E11.5)
C**** F.  MATRIX SIZING
      WRITE(IOUT,813)NN,NS,NMS,MNSS,NAS,MXS,NSMX,NSC,NV,MXV,NAM,NTOB,
     *MFE,MX,NX,NSEAC,NPFC
  813 FORMAT(8(/),27X,'F. MATRIX SIZING'//61X,'NN       - ',I3/61X,
     *'NS      - ',I3/61X,'NMS      - ',I3/61X,'MNSS    - ',I3/61X,'NAS     -
     * ',I3/61X,'MXS      - ',I3/61X,'NSMX     - ',I3/61X,'NSC      - ',I3/61
     *,'NV      - ',I3/61X,'MXV      - ',I3/61X,'NAM      - ',I3/61X,
     *'NTOB    - ',I3/61X,'MFE      - ',I3/61X,
     *'MX      - ',I3/61X,'NX       - ',I3/61X,'NSEAC  - ',I3/61X,
     *'NPFC    - ',I3)
C**** G.  MULTIPLE CAVITY PARAMETERS
      IF(NV.EQ.1) GO TO 953
      WRITE(IOUT,814) NAMMC,NOO,NOM,NMO,DFQY,NI,ER,NG
  814 FORMAT('1',27X,'G.  MULTIPLE CAVITY PARAMETERS'//61X,
     &'NAMMC  = ',I3/61X,'NOO      = 'I3/61X,'NOM      - 'I3/61X,
     &'NMO    - ',I3/61X,'DFQY     - ',F10.5/61X,'NI       - ',I3/61X,
     &'ER     - ',F10.5/61X,'NG       - 'I3)
  940 CONTINUE
C**** H.  OPENING/VOLUME RELATIONSHIPS
      WRITE(IOUT,815)
  815 FORMAT(8(/),27X,'H.  OPENING/VOLUME RELATIONSHIPS'////39X,
     &'IGEMOV     OPENING',5X,'VOLUME (TAIL)   VOLUME (HEAD)'/49X,
     &'******* ',5X,'*************    *************')
      DO 945 I=1,NOO
  945 WRITE(IOUT,816)I,IGEMOV(1,I),IGEMOV(2,I)
  816 FORMAT(50X,I3,13X,I3,13X,I3)
C**** I.  OPENING DESCRIPTION
      WRITE(IOUT,817)
  817 FORMAT(8(/),27X,'I. OPENING DESCRIPTION'//41X,'OPENING', 9X,
     *'OPENING',9X,'OPENING'/41X,'NUMBER',11X,'AREAO',12X,
     *'TYPE',6X/41X,'*******',7X,'***********',8X,'*******')
      DO 950 I=1,NOO
      WRITE(IOUT,818) I,AREAO(I),IOTYP(I)
  818 FORMAT(42X,I3,9X,E11.5,9X,I3)
  950 CONTINUE
      WRITE(IOUT,819)
  819 FORMAT(//40X,'OPENING NUMBER'/40X,'**************')
      DO 953 I=1,NOO
      WRITE(IOUT,820) I
  820 FORMAT(/,27X,I3,17X,'NODE'/38X,'ORDER   NUMBER',7X,'XC',13X,'YC',
     *13X,'ZC'/38X,'*****    ******    **********     **********      *****
     A*****')
      DO 951 J=1,MXS
      IF(IOCM(J,I).EQ.0)GOTO 951
      WRITE(IOUT,821) J,IOCM(J,I),ONODC(J,1,I),ONODC(J,2,I),
     *ONODC(J,3,I)
```

```
  821 FORMAT(39X,I3,5X,I3,5X,E11.5,5X,E11.5,5X,E11.5)
  951 CONTINUE
      WRITE(IOUT,228)
  228 FORMAT(//42X,'OTMX',11X,'OTMY',11X,'OTMZ',11X,'OORG'/42X,'****',
     A11X,'****',11X,'****',11X,'****')
      DC 952 K=1,3
      WRITE(IOUT,822)OTM(K,1,I),OTM(K,2,I),OTM(K,3,I),OORG(K,I)
  822 FORMAT(39X,E10.2,5X,E10.2,5X,E10.2,5X,E10.2)
  952 CONTINUE
  953 CONTINUE
C****  J.  STRUCTURAL DATA ACCESS AND STORAGE
      WRITE(IOUT,823)
  823 FORMAT(8(/),27X,'J. STRUCTURAL DATA ACCESS AND STORAGE'//49X,
     *'PROBLEM'/49X,'SURFACE'/49X,'NUMBER',10X,'NSDAT',11X,'NSTOR'/49X,
     *'*******',9X,'*****',11X,'*****')
      DO 954 I=1,NMS
      WRITE(IOUT,824)I,NSDAT(I),NSTOR(I)
  824 FORMAT(50X,I3,13X,I3,13X,I3)
  954 CONTINUE
C****  K.  GLOBAL NODE POINTS
      WRITE(IOUT,825)
  825 FORMAT(8(/),27X,'K. GLOBAL NODE POINTS'//43X,'NODE'/42X,'NUMBER',
     *12X,'X',12X,'Y',12X,'Z'/42X,'******',8X,'**********',3X,
     *'**********',3X,'**********')
      DO 955 I=1,NN
      WRITE(IOUT,826)I,GNODE(I,1),GNODE(I,2),GNODE(I,3)
  826 FORMAT(43X,I3,10X,E11.5,3X,E11.5,3X,E11.5)
  955 CONTINUE
C****  L.  SURFACE DESCRIPTION
      WRITE(IOUT,827)
  827 FORMAT(8(/),27X,'L. SURFACE DESCRIPTION'//41X,'SURFACE', 9X,
     *'SURFACE',9X,'SURFACE'/41X,'NUMBER',11X,'AREA',12X,
     *'TYPE'/41X,'*******',7X,'**********',8X,'*******')
      DO 956 I=1,NS
      WRITE(IOUT,828) I,AREA(I),ISTYP(I)
  828 FORMAT(42X,I3,9X,E11.5,9X,I3)
  956 CONTINUE
      WRITE(IOUT,829)
  829 FORMAT(//5X,'SURFACE NUMBER'/5X,'**************')
      DO 958 I=1,NS
      IF(ISTYP(I).EQ.0)GOTO 958
      WRITE(IOUT,830) I
  830 FORMAT(/,27X,I3,17X,'NODE'/38X,'ORDER   NUMBER',7X,'XC',13X,'YC',
     *13X,'ZC'/38X,'*****   ******   **********   **********   ****
     A*****')
      DO 957 J=1,MXS
      WRITE(IOUT,831) J,ISURCM(J,I),SNODC(J,1,I),SNODC(J,2,I),
     *SNODC(J,3,I)
  831 FORMAT(39X,I3,5X,I3,5X,E11.5,5X,E11.5,5X,E11.5)
  957 CONTINUE
      WRITE(IOUT,832)
  832 FORMAT(//42X,'STMX',11X,'STMY',11X,'STMZ',11X,'SORG'/42X,'****',
     A11X,'****',11X,'****',11X,'****')
      DO 958 K=1,3
      WRITE(IOUT,833)STM(K,1,I),STM(K,2,I),STM(K,3,I),SORG(K,I)
  833 FORMAT(39X,E10.2,5X,E10.2,5X,E10.2,5X,E10.2)
  958 CONTINUE
```

```
C**** M.  MASTER SURFACE/SURFACE RELATIONSHIPS
      WRITE(IOUT,834)
  834 FORMAT(8(/),27X,'M. MASTER SURFACE / SURFACE RELATIONS'//46X,
     *'MASTER SURFACE',11X,'COMPONENT SURFACE'/46X,'***************',11X,
     *'******************')
      DO 959 I=1,NMS
      WRITE(IOUT,835)I,MASSUR(1,I)
  835 FORMAT(/51X,I3,24X,I3)
      DO 959 J=2,MNSS
      WRITE(IOUT,836) MASSUR(J,I)
  836 FORMAT(78X,I3)
  959 CONTINUE
C****  N.  STRUCTURAL CONSTANTS : MODAL ANALYSIS
      IF(IOP.EQ.5) GOTO 961
      WRITE(IOUT,837)
  837 FORMAT(8(/),27X,'N. STRUCTURAL CONSTANTS'//55X,'SURFACE',6X,
     A'CONSTANTS'/55X,'********',6X,'************')
      DO 961 I=1,NMS
      IF(ISTYP(I).EQ.0)GOTO 961
      WRITE(IOUT,838) I,SC(1,I)
  838 FORMAT(/57X,I3,8X,E11.5)
      DO 960 J=2,NSC
      WRITE(IOUT,839) SC(J,I)
  839 FORMAT(68X,E11.5)
  960 CONTINUE
  961 CONTINUE
C****  O.  STRUCTURAL MODAL DATA
C****
C           NO OUTPUT HERE
C****
C****  P.  STRUCTURAL CONSTANTS : STATISTICAL ENERGY ANALYSIS
      IF(MBAND.EQ.IHBAND)GOTO 969
      IF(IOP.NE.1) GOTO 969
      WRITE(IOUT,843)
  843 FORMAT(8(/),27X,'P.  STRUCTURAL CONSTANTS : SEA'//10X,
     & 'SURFACE',20X,'SEA CODE'/10X,'********',20X,'*********')
      IRO=0
      DO 969 IS=1,NMS
      IF(ISEAO(IS).EQ.0) GOTO 969
      IR=NSTOR(IS)
      IF(IR.EQ.IRO)WRITE(IOUT,1844)IS,IS-1
      IF(IR.EQ.IRO)GOTO 969
      READ(L13'IR)WMH
      WRITE(IOUT,844)IS,ISEAO(IS)
      IRO=IR
  844 FORMAT(//,12X,I3,25X,I3)
 1844 FORMAT(5X,'DATA FOR SURFACE - ',I3,' SAME AS FOR SURFACE - ',I3)
      DO 969 NOB=1,NTOB
      WRITE(IOUT,*)(WMH(J,NOB),J=1,NSEAC)
  969 CONTINUE
C****
C****  Q.  VOLUME DESCRIPTION
      WRITE(IOUT,845)
  845 FORMAT(8(/),27X,'Q. VOLUME DESCRIPTION'//41X,'VOLUME',26X,
     A'VOLUME'/41X,'NUMBER',10X,'VOLUME',11X,'TYPE'
     A/41X,'******',8X,'**********',8X,'*******')
      DO 970 I=1,NV
```

```
      WRITE(IOUT,846) I,V(I),IVTYP(I)
  846 FORMAT(42X,I3,9X,E11.5,9X,I3)
  970 CONTINUE
      WRITE(IOUT,847)
  847 FORMAT(//5X,'VOLUME NUMBER'/5X,'**************')
      DO 973 I=1,NV
      WRITE(IOUT,848) I
  848 FORMAT(/,27X,I3,17X,'NODE'/38X,'ORDER   NUMBER',7X,'XC',13X,'YC',
     A13X,'ZC'/38X,'*****   ******   **********     **********      *****
     A*****')
      DO 971 J=1,MXV
      WRITE(IOUT,849) J,IVOLCM(J,I),VNODC(J,1,I),VNODC(J,2,I),
     *VNODC(J,3,I)
  849 FORMAT(39X,I3,5X,I3,5X,E10.2,5X,E10.2,5X,E10.2)
  971 CONTINUE
      WRITE(IOUT,850)
  850 FORMAT(//42X,'VTMX',11X,'VTMY',11X,'VTMZ',11X,'VORG'/42X,'****',
     A11X,'****',11X,'****',11X,'****')
      DO 972 K=1,3
      WRITE(IOUT,851)VTM(K,1,I),VTM(K,2,I),VTM(K,3,I),VORG(K,I)
  851 FORMAT(39X,E10.2,5X,E10.2,5X,E10.2,5X,E10.2)
  972 CONTINUE
  973 CONTINUE
C****  R.  ACOUSTIC CONSTANTS
      WRITE(IOUT,852) RO,CO,PREF
  852 FORMAT(8(/),27X,'R. ACOUSTIC CONSTANTS'//34X,'RO    - ',E11.5/34X,
     *'CO    - ',E11.5/34X,'PREF - ',E7.2)
C****  S.  ACOUSTIC MODAL DATA
C****
C****  T.  SURFACE/VOLUME REALTIONSHIPS
C****
      WRITE(IOUT,854)
  854 FORMAT(8(/),27X,'T.  SURFACE/VOLUME RELATIONSHIPS'////39X,
     & 'ISV         SURFACE',5X,'ADJACENT VOLUME'/49X,'*******',
     & 5X,'***************')
      DO 979 I=1,NS
      WRITE(IOUT,855)I,ISV(I)
  855 FORMAT(50X,I3,13X,I3)
  979 CONTINUE
      IF(IOP.EQ.5) GOTO 111
      IF(MOP(3).EQ.1)GOTO 981
C****  U.  SURFACE ABSORPTION
      WRITE(IOUT,856)
  856 FORMAT(8(/),27X,'U. SURFACE ABSORPTION')
      DO 981 I=1,NS
      WRITE(IOUT,857)
  857 FORMAT(/42X,'SURFACE',7X,'FREQUENCY',12X,'LOSS FACTOR'/42X,'*****
     A*',7X,'**********',9X,'*****************'/)
      WRITE(IOUT,858)I,CENTF(1),ZNDATA(1,I)
  858 FORMAT(44X,I3,9X,E11.5,9X,E16.5)
      DO 980 J=2,NTOB
      WRITE(IOUT,859) CENTF(J),ZNDATA(J,I)
  859 FORMAT(56X,E11.5,9X,E16.5)
  980 CONTINUE
  981 CONTINUE
      IF(MOP(3).NE.1) GO TO 982
      WRITE(IOUT,860)
```

```
   860 FORMAT(8(/),27X,'U. CAVITY DAMPING (EXPERIMENTAL)'//48X,
     A'FREQUENCY (HZ)',9X,'LOSS FACTOR'/50X,'***********',9X,
     A'*****************')
      DO 982 I=1,NTOB
      WRITE(IOUT,861) CENTF(I),ZNDATA(I,1)
   861 FORMAT(/50X,E11.5,9X,E16.5)
   982 CONTINUE
C****  V.  STRUCTURAL DAMPING
      WRITE(IOUT,862)
   862 FORMAT(8(/),27X,'V. STRUCTURAL DAMPING'//42X,'SURFACE',7X,
     A'FREQUENCY',12X,'DAMPING(C/CC)'/42X,'*******',7X,'**********',9X,
     A'*****************')
      IRO=0
      DO 984 I=1,NMS
      IR=2*NFS+NSTOR(I)
      IF(IR.EQ.IRO)WRITE(IOUT,1863)I,I-1
      IF(IR.EQ.IRO)GOTO 984
      READ(L8'IR) ZMDATA
      WRITE(IOUT,863) I,CENTF(1),ZMDATA(1)
   863 FORMAT(/44X,I3,9X,E11.5,9X,E16.5)
  1863 FORMAT(5X,'DATA FOR SURFACE - ',I3,' SAME AS FOR SURFACE - ',I3)
      IRO=IR
      DO 983 J=2,NTOB
      WRITE(IOUT,864) CENTF(J),ZMDATA(J)
   864 FORMAT(56X,E11.5,9X,E16.5)
   983 CONTINUE
   984 CONTINUE
C****  W.  EXTERNAL SPL : FREQUENCY DOMAIN
      WRITE(IOUT,865)PREF
   865 FORMAT(8(/),27X,'W. EXTERNAL SPL'//32X,'SURFACE',13X,
     A'FREQUENCY (HZ)     SPL(DB,REF& ',E16.5,' )'/32X,'*******',15X,
     A'**********',17X,'**********')
      IRO=0
      DO 986 I=1,NMS
      IR=3*NFS+NSTOR(I)
      IF(IR.EQ.IRO)WRITE(IOUT,1866)I,I-1
      IF(IR.EQ.IRO)GOTO 986
      READ(L8'IR) SPL
      IRO=IR
      WRITE(IOUT,866) I,CENTF(1),SPL(1)
   866 FORMAT(/34X,I3,17X,E11.5,17X,E11.5)
  1866 FORMAT(5X,'DATA FOR SURFACE - ',I3,' SAME AS FOR SURFACE - ',I3)
      DO 985 J=2,NTOB
      WRITE(IOUT,867) CENTF(J),SPL(J)
   867 FORMAT(54X,E11.5,17X,E11.5)
   985 CONTINUE
   986 CONTINUE
C****  X. PRESSURE FIELD CONSTANTS
C****
      WRITE(IOUT,868)
   868 FORMAT(8(/),27X,'X.  EXTERNAL PRESSURE FIELD CONSTANTS'
     &//10X,'SURFACE',20X,'PRESSURE FIELD CONSTANTS'/10X,
     &'*******',20X,'************************.)
      DO 987 IS=1,NMS
      WRITE(IOUT,869)IS
      IF(IPF(IS).EQ.0)WRITE(IOUT,1869)IS,NSDAT(IS)
      IF(IPF(IS).EQ.0)GOTO 987
```

```
  869 FORMAT(3X,I3)
 1869 FORMAT(5X,'DATA FOR SURFACE - ',I3,' SAME AS FOR FILE SURFACE - '
     &,I3)
      WRITE(IOUT,870)(EX(J,IS),J=1,NPFC)
  870 FORMAT(10E11.5)
  987 CONTINUE
  155 CONTINUE
  111 CONTINUE
      RETURN
C***********************************************************************
      SUBROUTINE TRANS
C***********************************************************************
      DO 1000 ISUR=1,NS
      IF(ISTYP(ISUR).EQ.0) GOTO 1000
      IA=ISURCM(1,ISUR)
      IB=ISURCM(2,ISUR)
      IC=ISURCM(3,ISUR)
      SORG(1,ISUR)=GNODE(IA,1)
      SORG(2,ISUR)=GNODE(IA,2)
      SORG(3,ISUR)=GNODE(IA,3)
      XA1=GNODE(IB,1)-SORG(1,ISUR)
      XA2=GNODE(IB,2)-SORG(2,ISUR)
      XA3=GNODE(IB,3)-SORG(3,ISUR)
      YA1=GNODE(IC,1)-SORG(1,ISUR)
      YA2=GNODE(IC,2)-SORG(2,ISUR)
      YA3=GNODE(IC,3)-SORG(3,ISUR)
      ZA1=(XA2*YA3-XA3*YA2)
      ZA2=(XA3*YA1-XA1*YA3)
      ZA3=(XA1*YA2-XA2*YA1)
      XA=(XA1**2+XA2**2+XA3**2)**.5
      YA=(YA1**2+YA2**2+YA3**2)**.5
      ZA=(ZA1**2+ZA2**2+ZA3**2)**.5
      STM(1,1,ISUR)=XA1/XA
      STM(1,2,ISUR)=XA2/XA
      STM(1,3,ISUR)=XA3/XA
      STM(2,1,ISUR)=YA1/YA
      STM(2,2,ISUR)=YA2/YA
      STM(2,3,ISUR)=YA3/YA
      STM(3,1,ISUR)=ZA1/ZA
      STM(3,2,ISUR)=ZA2/ZA
      STM(3,3,ISUR)=ZA3/ZA
      DO 10 I=1,MXS
      X=GNODE(ISURCM(I,ISUR),1)-SORG(1,ISUR)
      Y=GNODE(ISURCM(I,ISUR),2)-SORG(2,ISUR)
      Z=GNODE(ISURCM(I,ISUR),3)-SORG(3,ISUR)
      SNODC(I,1,ISUR)=STM(1,1,ISUR)*X+STM(1,2,ISUR)*Y+STM(1,3,ISUR)*Z
      SNODC(I,2,ISUR)=STM(2,1,ISUR)*X+STM(2,2,ISUR)*Y+STM(2,3,ISUR)*Z
      SNODC(I,3,ISUR)=STM(3,1,ISUR)*X+STM(3,2,ISUR)*Y+STM(3,3,ISUR)*Z
   10 CONTINUE
      STM(1,1,ISUR)=XA1/XA
      STM(2,1,ISUR)=XA2/XA
      STM(3,1,ISUR)=XA3/XA
      STM(1,2,ISUR)=YA1/YA
      STM(2,2,ISUR)=YA2/YA
      STM(3,2,ISUR)=YA3/YA
      STM(1,3,ISUR)=ZA1/ZA
      STM(2,3,ISUR)=ZA2/ZA
```

```
      STM(3,3,ISUR)=ZA3/ZA
 1000 CONTINUE
      DO 2000 NVOL=1,NV
      IA=IVOLCM(1,NVOL)
      IB=IVOLCM(2,NVOL)
      IC=IVOLCM(3,NVOL)
      VORG(1,NVOL)=GNODE(IA,1)
      VORG(2,NVOL)=GNODE(IA,2)
      VORG(3,NVOL)=GNODE(IA,3)
      XA1=GNODE(IB,1)-VORG(1,NVOL)
      XA2=GNODE(IB,2)-VORG(2,NVOL)
      XA3=GNODE(IB,3)-VORG(3,NVOL)
      YA1=GNODE(IC,1)-VORG(1,NVOL)
      YA2=GNODE(IC,2)-VORG(2,NVOL)
      YA3=GNODE(IC,3)-VORG(3,NVOL)
      ZA1=(XA2*YA3-XA3*YA2)
      ZA2=(XA3*YA1-XA1*YA3)
      ZA3=(XA1*YA2-XA2*YA1)
      XA=(XA1**2+XA2**2+XA3**2)**.5
      YA=(YA1**2+YA2**2+YA3**2)**.5
      ZA=(ZA1**2+ZA2**2+ZA3**2)**.5
      VTM(1,1,NVOL)=XA1/XA
      VTM(1,2,NVOL)=XA2/XA
      VTM(1,3,NVOL)=XA3/XA
      VTM(2,1,NVOL)=YA1/YA
      VTM(2,2,NVOL)=YA2/YA
      VTM(2,3,NVOL)=YA3/YA
      VTM(3,1,NVOL)=ZA1/ZA
      VTM(3,2,NVOL)=ZA2/ZA
      VTM(3,3,NVOL)=ZA3/ZA
      DO 20 I=1,MXV
      X=GNODE(IVOLCM(I,NVOL),1)-VORG(1,NVOL)
      Y=GNODE(IVOLCM(I,NVOL),2)-VORG(2,NVOL)
      Z=GNODE(IVOLCM(I,NVOL),3)-VORG(3,NVOL)
      VNODC(I,1,NVOL )=VTM(1,1,NVOL)*X+VTM(1,2,NVOL)*Y+VTM(1,3,NVOL)*Z
      VNODC(I,2,NVOL )=VTM(2,1,NVOL)*X+VTM(2,2,NVOL)*Y+VTM(2,3,NVOL)*Z
      VNODC(I,3,NVOL )=VTM(3,1,NVOL)*X+VTM(3,2,NVOL)*Y+VTM(3,3,NVOL)*Z
   20 CONTINUE
 2000 CONTINUE
  111 CONTINUE
      RETURN
      SUBROUTINE OTRANS
C*******************************************************************
      DO 1000 ISUR=1,NOO
      IA=IOCM(1,ISUR)
      IB=IOCM(2,ISUR)
      IC=IOCM(3,ISUR)
      OORG(1,ISUR)=GNODE(IA,1)
      OORG(2,ISUR)=GNODE(IA,2)
      OORG(3,ISUR)=GNODE(IA,3)
      XA1=GNODE(IB,1)-OORG(1,ISUR)
      XA2=GNODE(IB,2)-OORG(2,ISUR)
      XA3=GNODE(IB,3)-OORG(3,ISUR)
      YA1=GNODE(IC,1)-OORG(1,ISUR)
      YA2=GNODE(IC,2)-OORG(2,ISUR)
      YA3=GNODE(IC,3)-OORG(3,ISUR)
      ZA1=(XA2*YA3-XA3*YA2)
```

```
      ZA2=(XA3*YA1-XA1*YA3)
      ZA3=(XA1*YA2-XA2*YA1)
      XA=(XA1**2+XA2**2+XA3**2)**.5
      YA=(YA1**2+YA2**2+YA3**2)**.5
      ZA=(ZA1**2+ZA2**2+ZA3**2)**.5
      OTM(1,1,ISUR)=XA1/XA
      OTM(1,2,ISUR)=XA2/XA
      OTM(1,3,ISUR)=XA3/XA
      OTM(2,1,ISUR)=YA1/YA
      OTM(2,2,ISUR)=YA2/YA
      OTM(2,3,ISUR)=YA3/YA
      OTM(3,1,ISUR)=ZA1/ZA
      OTM(3,2,ISUR)=ZA2/ZA
      OTM(3,3,ISUR)=ZA3/ZA
      DO 10 I=1,MXS
      X=GNODE(IOCM(I,ISUR),1)-OORG(1,ISUR)
      Y=GNODE(IOCM(I,ISUR),2)-OORG(2,ISUR)
      Z=GNODE(IOCM(I,ISUR),3)-OORG(3,ISUR)
      ONODC(I,1,ISUR)=OTM(1,1,ISUR)*X+OTM(1,2,ISUR)*Y+OTM(1,3,ISUR)*Z
      ONODC(I,2,ISUR)=OTM(2,1,ISUR)*X+OTM(2,2,ISUR)*Y+OTM(2,3,ISUR)*Z
      ONODC(I,3,ISUR)=OTM(3,1,ISUR)*X+OTM(3,2,ISUR)*Y+OTM(3,3,ISUR)*Z
   10 CONTINUE
      OTM(1,1,ISUR)=XA1/XA
      OTM(2,1,ISUR)=XA2/XA
      OTM(3,1,ISUR)=XA3/XA
      OTM(1,2,ISUR)=YA1/YA
      OTM(2,2,ISUR)=YA2/YA
      OTM(3,2,ISUR)=YA3/YA
      OTM(1,3,ISUR)=ZA1/ZA
      OTM(2,3,ISUR)=ZA2/ZA
      OTM(3,3,ISUR)=ZA3/ZA
 1000 CONTINUE
  111 CONTINUE
      RETURN
C********************************************************************
      SUBROUTINE FCTCAL
      FAC(1)=1.D0
      FAC(2)=1.D0
      DO 4 J=2,56
      FAC(J+1)=FAC(1)*DFLOAT(J)
      FAC(1)=FAC(J+1)
    4 CONTINUE
      FAC(1)=1.D0
      PSI(1)=-.5772156649015329D00
      DO 10 J=1,60
      PSI(J)=PSI(1)+1.D0/DFLOAT(J)
      PSI(1)=PSI(J)
   10 CONTINUE
      PSI(1)=-.5772156649015329D00
      RETURN
      END

FTN 4282 IBANK 5803 DBANK 309 COMMON
```

ORIGINAL PAGE IS
OF POOR QUALITY

```
•S  XX.FEDAT,XX.
1OR1A  12/14/83-18:38(16,)
          SUBROUTINE FEDAT(IS,NFEN,NFEDS,NS,NMS,IFE,IFEN,ISTYP,STM,SORG,
        & WM,NSTOR,BPQ,MOP,AREA,D1,D2,D3,VM,SN,X1,X2,TK,Y,MX,NX,MFE,NSMX,
        & SL1,SL2,MMAX,NMAX,L9,L12,L18)
          DIMENSION IFE(NMS),IFEN(MFE),ISTYP(NS),STM(3,3,NS),SORG(3,NS),
        & WM(3,NSMX),NSTOR(NMS),BPQ(MX,NX,NSMX),MOP(4),AREA(NS),D1(MFE),
        & D2(MFE),D3(MFE),VM(MFE),SN(MFE,3,NSMX),X1(MMAX),X2(NMAX),TK(MFE),
        & Y(MMAX,NMAX)
          PI=3.14159
C**** LOAD THE F.E. DATA FOR THE SURFACE
          IR=IFE(IS)
          READ(L18'IR)NFES,NSM,(I,D1(I),D2(K),D3(I),I8=1,NFES),
        & (I,VM(I),I8=1,NFES),
        & (I,WM(1,I),((SN(K,J,I),J=1,NFES),K=1,3),I8=1,NSM)
C*** PROCESS THE F.E. DATA
          IR=NSTOR(IS)
          WRITE(L9'IR)WM
C*****   ASSUME THE RESULTANT MOTION OF THE TRANSLATIONAL DEGREES OF
C*****   FREEDOM IS NORMAL TO THE SURFACE LET THE MODE ASSUME THE SIGN
C*****   OF THE LARGEST TOTAL DEFLECTION OVER THE FIRST MODE. ONLY THE
C*****   F.E. NODES ASSOCIATED WITH THE SURFACE ARE CONSIDERED.
          A=0.0
          B=0.0
          C=0.0
          DO 30 L=1,NFEN
          J=IFEN(L)
          A=A+SN(J,1,1)**2
          B=B+SN(J,2,1)**2
          C=C+SN(J,3,1)**2
       30 CONTINUE
          D=AMAX1(A,B,C)
          IF(A.EQ.D)IB=1
          IF(B.EQ.D)IB=2
          IF(C.EQ.D)IB=3
          SGN=1.0
          DO 40 K=1,NSM
          DO 40 L=1,NFEN
          J=IFEN(L)
          SGN=SIGN(SGN,SN(J,IB,K))
       40 SN(J,1,K)=(SN(J,1,K)**2+SN(J,2,K)**2+SN(J,3,K)**2)**.5*SGN
C****  RENORMALIZE THE MODE SHAPE TO GEN-MASS=1.0
          DO 70 K=1,NSM
          GM=0.0
          DO 50 L=1,NFEN
          J=IFEN(L)
       50 GM=VM(J)*SN(J,1,K)**2+GM
          GM=GM**.5
          DO 60 L=1,NFEN
          J=IFEN(L)
       60 SN(J,1,K)=SN(J,1,K)/GM
       70 CONTINUE
C***   TRANSLATE THE F.E. GLOBAL COORDINATES TO THE SURFACE COMPONENT
C***   COORDINATE SYSTEM
          DO 80 I=1,NFEN
          J=IFEN(I)
          XP=D1(J)-SORG(1,IS)
```

```
      YP=D2(J)-SORG(2,IS)
      ZP=D3(J)-SORG(3,IS)
      D1(J)=STM(1,1,IS)*XP+STM(1,2,IS)*YP+STM(1,3,IS)*ZP
      D2(J)=STM(2,1,IS)*XP+STM(2,2,IS)*YP+STM(2,3,IS)*ZP
      D3(J)=STM(3,1,IS)*XP+STM(3,2,IS)*YP+STM(3,3,IS)*ZP
   80 CONTINUE
C SHORT METHOD OF BPQ CALCULATION *****************************
      IF (MOP(4).NE.1) GO TO 1000
      DO 200 K=1,NSM
      DO 200 M=1,MX
      DO 200 N=1,NX
      BPQ(M,N,K)=0.0
      DO 100 KK=1,NFEN
  100 BPQ(M,N,K)=BPQ(M,N,K)+SN(KK,1,K)*SIN(M*PI*D1(KK)/SL1)
     !*SIN(N*PI*D2(KK)/SL2)*4/SL1/SL2
  200 CONTINUE
      GOTO 1111
C END SHORT METHOD *******************************************
C**** LONG METHOD OF BPQ CALCULATION THAT USES INTERPOLATION
C**** BETWEEN DATA POINTS IN CONJUNCTION WITH GAUSSIAN
C**** QUADRITURE
C***  SELECT THE STM MATRIX SUCH THAT THE Z-COMPONENT OF THE
C***  SURFACE COORDINATE SYSTEM IS THE DIRECTION MOST NORMAL
C***  TO THE SURFACE
 1000 CONTINUE
      DO 1010 I=1,NFEN
      TK(I)=I*1.0
 1010 CONTINUE
      CALL ARASSL( NFES,D1,D2,TK)
      K=1
      X1(1)=D1(1)
      DO 1030 M=1, NFES
      IF(D1(M).EQ.X1(K)) GO TO 1030
      K=K+1
      X1(K)=D1(M)
 1030 CONTINUE
      K1=K
      CALL ARASSL( NFES,D2,D1,TK)
      K=1
      X2(1)= D2(1)
      DO 1040 M=1,NFES
      IF(D2(M).EQ.X2(K)) GO TO 1040
      K=K+1
      X1(K)=D2(M)
 1040 CONTINUE
      K2=K
      DO 1500 MWM=1,NSM
C****  ZERO Y ARRAY
      DO 1042 I=1,MMAX
      DO 1042 J=1,NMAX
 1042 Y(I,J)=0.0
C****  LOAD THE MODE SHAPE TABLE Y
      DO 1050 I=1,K1
      DO 1050 J=1,K2
      DO 1045 K=1,NFEN
 1045 IF(D1(K).EQ.D1(I).AND.D2(K).EQ.D2(J))Y(I,J)=SN(INT(TK(K)),1,MWM)
 1050 CONTINUE
```

```
      CALL BSUR(MWM)
 1500 CONTINUE
 1111 RETURN
C***********************************************************************
      SUBROUTINE BSUR(MWM)
      DIMENSION X8(8),A(8)
      DIMENSION DX(8),DA(8)
      DO 1070 M=1,MX
      DO 1060 N=1,NX
      NGP=8
      NGP1=NGP/2
      CALL GLO(DA,DX,-1.0,1.0,NGP,NGP1)
      DO 2 I=1,NGP
      XX=DX(I)
      AB=DA(I)
      X8(I)=XX
    2  A(I)=AB
      AA=0.0
      BB=SL1
      H1=(BB-AA)/2.
      G1=(BB+AA)/2.
      Q1=0.
      DO 4 I=1,NGP
      UI=H1*X8(I)+G1
      AI=H1*A(I)
      C=0.0
      D=SL2
      H=(D-C)/2.
      G=(D+C)/2.
      Q=0.
      DO 3 J=1,NGP
      VJ=H*X8(J)+G
    3 Q=Q+A(J)*F(UI,VJ)
    4 Q1=Q1+AI*H*Q
      BPQ(M,N,MWM)=Q1
 1060 CONTINUE
 1070 CONTINUE
 1111 RETURN
C***********************************************************************
      SUBROUTINE GLO(DA,DX,C,D,NGP,NGP1)
      DIMENSION DX(NGP),DA(NGP),XX(8),A1(8)
      DATA (XX(I),A1(I), I=1,4)/
     & .9602898564,.1012285362
     &,.7966664774,.2223810344
     &,.5255324099,.3137066458
     &,.1834346424,.3626837833/
      DMC=0.5D0*(D-C)
      DPC=0.5D0*(D+C)
      DO 2 I=1,NGP1
      NI=(NGP+1)-I
      DX(I)=-DMC*XX(I)+DPC
      DX(NI)=DMC*XX(I)+DPC
      DA(I)=DMC*A1(I)
    2 DA(NI)=DMC*A1(I)
      RETURN
      FUNCTION F(UI,VJ)
      CALL BIVLAG(UI,K1,VJ,K2,X1,3,X2,3,Y,GG,DX1,DX2,1,1,IERR)
```

```
      F=4/AREA(IS)*GG*SIN(M*PI*UI/SL1)*SIN(N*PI*VJ/SL2)
      RETURN
C***********************************************************************
       SUBROUTINE BIVLAG(A1,M,A2,N,X1,IP1,X2,IP2,Y,G,
     1DX1,DX2,MZ1,MZ2,IER)
C***********************************************************************
C         A1 = FIRST ARGUMENT
C         M  = NUMBER OF POINTS IN X1 TABLE
C         A2 = SECOND ARGUMENT
C         N  = NUMBER OF POINTS IN X2 TABLE
C         X1 = ARRAY OF X1 VALUES
C         IP1= NUMBER OF POINTS TO USE FOR INTERPOLATION FOR A1
C         X2 = ARRAY OF X2 VALUES
C         IP2= NUMBER OF POINTS TO USE FOR INTERPOLATING FOR A2
C         Y  = DEPENDENT VARIABLE TABLE
C         G  = INTERPOLATED VALUE
C         DX1= PARTIAL DERIVATIVE OF Y WITH RESPECT TO X1
C         DX2= PARTIAL DERIVATIVE OF Y WITH RESPECT TO X2
C         MZ1= -1, DX1 WILL BE COMPUTED
C            = +1, DX1 WILL NOT BE COMPUTED
C         MZ2= -1, DX2 WILL BE COMPUTED
C            = +1, DX2 WILL NOT BE COMPUTED
C
C         IER= ERROR FLAG ..0 NO ERROR;  NON-ZERO ERROR
C
      DIMENSION X1(M),X2(N),Y(N,M),C(20),D(20),DXN(20),DX1N(20)
      G=0.
      DX1=0.
      DX2=0.
      IER=1
      IF(IP1 .GT. 20) GO TO 500
      IER=3
      IF(IP1 .GT. M) GO TO 500
      IF(IP2 .GT. 20) GO TO 500
      IER=2
      IER=4
      IF(IP2 .GT. N) GO TO 500
      IER=0
      I=0
   20 I=I+1
      IF(A1 .LT. X1(I)) GO TO 30
      IF(I .LT. M) GO TO 20
   25 IE1=M
      IS1=M-IP1+1
      GO TO 50
   30 IS1=I-IP1/2
      IF(IS1 .LT. 1) IS1=1
      IE1=IS1+IP1-1
      IF(IE1 .GT. M) GO TO 25
   50 I=0
   60 I=I+1
      IF(A2 .LT. X2(I)) GO TO 70
      IF(I .LT. N) GO TO 60
   65 IE2=N
      IS2=N-IP2+1
      GO TO 100
   70 IS2=I-IP2/2
```

```
        IF(IS2 .LT. 1) IS2=1
        IE2=IS2+IP2-1
        IF(IE2 .GT. N) GO TO 65
100     CONTINUE
        IT=IS2
        DO 120 I=1,IP2
        TN=1.
        TD=1.
        DO 110 J=IS2,IE2
        IF(J .EQ. IT) GO TO 110
        TN=TN*(A2-X2(J))
        TD=TD*(X2(IT)-X2(J))
110     CONTINUE
        C(I)=TN/TD
120     IT=IT+1
        IF(MZ2 .GT. 0) GO TO 200
        IT=IS2
        DO 150 I=1,IP2
        DXN(I)=0.
        TD=1.
        DO 140 J=IS2,IE2
        IF(J .EQ. IT) GO TO 140
        TN=1.
        DO 130 K=IS2,IE2
        IF(K .EQ. J) GO TO 130
        IF(K .EQ. IT) GO TO 130
        TN=TN*(A2-X2(K))
130     CONTINUE
        DXN(I)=DXN(I)+TN
        TD=TD*(X2(IT)-X2(J))
140      CONTINUE
        DXN(I)=DXN(I)/TD
150     IT=IT+1
200     IT=IS1
        DO 220 I=1,IP1
        TN=1.
        TD=1.
        DO 210 J=IS1,IE1
        IF(J .EQ. IT) GO TO 210
        TN=TN*(A1-X1(J))
        TD=TD*(X1(IT)-X1(J))
210     CONTINUE
        D(I)=TN/TD
220     IT=IT+1
        IF(MZ1 .GT. 0) GO TO 300
        IT=IS1
        DO 250 I=1,IP1
        DX1N(I)=0.
        TD=1.
        DO 240 J=IS1,IE1
        IF(J .EQ. IT) GO TO 240
        TN=1.
        DO 230 K=IS1,IE1
        IF( K .EQ. IT) GO TO 230
        IF( K .EQ. J) GO TO 230
        TN=TN*(A1-X1(K))
230     CONTINUE
```

ORIGINAL PAGE IS
OF POOR QUALITY

```
          DX1N(I)=DX1N(I)+TN
          TD=TD*(X1(IT)-X1(J))
   240    CONTINUE
          DX1N(I)=DX1N(I)/TD
   250    IT=IT+1
   300    CONTINUE
          G=0.
          L=IS1
          DO 320 I=1,IP1
          T=0.
          K=IS2
          DO 310 J=1,IP2
          T=T+C(J)*Y(K,L)
          K=K+1
   310    CONTINUE
          G=G+D(I)*T
          L=L+1
   320    CONTINUE
   350    IF(MZ2 .GT. 0) GO TO 400
          DX2=0
          K=IS2
          DO 380 J=1,IP2
          T=0.
          L=IS1
          DO 370 I=1,IP1
          T=T+D(I)*Y(K,L)
          L=L+1
   370    CONTINUE
          DX2=DX2+DXN(J)*T
          K=K+1
   380    CONTINUE
   400    IF(MZ1 .GT. 0) GO TO 500
          DX1=0.
          L=IS1
          DO 420 I=1,IP1
          T=0.
          K=IS2
          DO 410 J=1,IP2
          T=T+C(J)*Y(K,L)
          K=K+1
   410    CONTINUE
          DX1=DX1+DX1N(I)*T
          L=L+1
   420    CONTINUE
         NFEDS=NFEDS
         ISTYP(1)=ISTYP(1)
         L12=L12
   500    RETURN
         END

FTN 1752 IBANK 640 DBANK
```

```
,S XX.FRQCAL.XX.
1CR1A  12/14/83-18:38(44,)
C***********************************************************************
      SUBROUTINE FRQCAL(WN,WMO,WM,W1,W2,W3,W4,NM,IPRE,VNODC,ONODC,SNODC,
     &CENTF,NSDAT,NSTOR,IVTYP,IOTYP,ISTYP,SC,IFE,
     *NAM,NV,NMO,NOO,NSMX,NMS,NS,MXV,MXS,MBAND,
     *CO,PI,NFS,NTOB,NSC,IOP,L8,L9,MXM,LN)
C*
C*
C*     FRQCAL DIRECTS CALCULATION OF VOLUME,OPENING,AND STRUCTURAL
C*    NATURAL FREQUENCIES.
C*
      COMMON/AREA9/FAC,PSI,DPI,DN,UP
      DOUBLE PRECISION FAC(57),PSI(60),DPI,DN,UP
      DIMENSION WN(4,NAM,NV),WMO(3,NMO,NOO),WM(3,NSMX),
     *NM(NMS),IPRE(4),VNODC(MXV,3,NV),ONODC(MXS,3,NOO)
     *,SNODC(MXS,3,NS),CENTF(NTOB),NSDAT(NS),NSTOR(NS),IVTYP(NV),
     *IOTYP(NOO),SC(NSC,NS),ISTYP(NS),IFE(NMS)
      DIMENSION W1(MXM),W2(MXM),W3(MXM),W4(MXM)
      INTEGER S
      FAL=1.5*CENTF(MBAND)
      FSL=FAL
      IF(LN.EQ.1) THEN
      MMAX=0
      NMAX=0
      ISMAX=0
C**** ESTIMATE THE MAXIMUM MODE NUMBER NEEDED
      CALL MODEST(MXM,MMAX,NMAX,ISMAX,MSX,NSX)
      RETURN
      ELSE
      ENDIF
      NFS=NFS
C****  IF REQUIRED, CALCULATE ACOUSTIC MODES
      IF(IPRE(1).EQ.1) GOTO 250
      WRITE(6,*)MXM,MMAX,NMAX,ISMAX
      DO 110 NVOL=1,NV
      NWN=0
      DO 80 N=0,NMAX
      DO 70 M=0,MMAX
      DO 60 S=0,ISMAX
      WT=OMEGAN(NVOL,M,N,S)
      IF(NWN.GE.MXM) GOTO 90
      IF(WT.GT.FAL.AND.NWN.GE.NAM) GOTO 70
      IF(WT.EQ.-1.0) GOTO 70
      NWN=NWN+1
      W1(NWN)=WT
      W2(NWN)=M*1.0
      W3(NWN)=N*1.0
      W4(NWN)=S*1.0
   60 CONTINUE
   70 CONTINUE
   80 CONTINUE
   90 CONTINUE
C****   SORT ACOUSTIC MODES
      CALL ARLSSL(NWN,W1,W2,W3,W4)
      DO 100 I=1,NAM
      WN(1,I,NVOL)=W1(I)
```

```
      WN(2,I,NVOL)=W2(I)
      WN(3,I,NVOL)=W3(I)
      WN(4,I,NVOL)=W4(I)
  100 CONTINUE
  110 CONTINUE
      WRITE(6,*)WN
C****   CALCULATE OPENING ALLOWED FREQUENCY CONSTANTS
      IF(NV.EQ.1)GOTO 250
      DO 200 IS=1,NOO
      MWM=0
      DO 180 N=0,NMAX
      DO 170 M=0,MMAX
      WT=OMEGAO(IS,M,N)
      IF(WT.EQ.-1.0) GOTO 170
      MWM=MWM+1
      W1(MWM)=WT
      W2(MWM)=M*1.0
      W3(MWM)=N*1.0
  170 CONTINUE
  180 CONTINUE
C****   SORT OPENING MODES
      CALL ARLSSL(MWM,W1,W2,W3,W4)
      DO 195 I=1,NMO
      WMO(1,I,IS)=W1(I)
      WMO(2,I,IS)=W2(I)
      WMO(3,I,IS)=W3(I)
  195 CONTINUE
  200 CONTINUE
      WRITE(6,*)MSX,NSX
      WRITE(6,*)WMO
C**** CALCUALTE THE FIRST NSMX STRUCTURAL NATURAL FREQUENCIES
C**** THAT ARE LESS THAN FAL
  250 IF(IOP.GE.5)GOTO 1111
      DO 310 IS=1,NMS
      MWM=0
      IF(NSDAT(IS).NE.0) GOTO 310
      IF(IFE(IS).NE.0) GOTO 310
      IF(ISTYP(IS).EQ.0)GOTO 310
      IF(ISTYP(IS).EQ.7)GOTO 310
      DO 280 N=1,NSX
      DO 270 M=1,MSX
      WT=OMEGAM(IS,M,N)
      WRITE(6,*)M,N,WT,MMAX,MXM
      IF(MWM.GE.MXM) GOTO 290
      IF(WT.GT.FSL.AND.MWM.GE.NSMX) GOTO 270
      MWM=MWM+1
      W1(MWM)=WT
      W2(MWM)=M*1.0
      W3(MWM)=N*1.0
      W4(MWM)=N*1.0
  270 CONTINUE
  280 CONTINUE
  290 CONTINUE
C****   SORT STRUCTURAL NATURAL FREQUENCIES
      CALL ARLSSL(MWM,W1,W2,W3,W4)
       DO 293 I=1,MWM
  293 IF(W1(I).GT.FSL)GOTO 294
```

```
  294 NM(IS)=I-1
      IF(NM(IS).GT.NSMX)NM(IS)=NSMX
      DO 295 I=1,NSMX
      WM(1,I)=W1(I)
      WM(2,I)=W2(I)
      WM(3,I)=W3(I)
  295 CONTINUE
      IR=NSTOR(IS)
      WRITE(L9'IR) WM
  310 CONTINUE
      DO 320 IS=1,NMS
      IF(NSDAT(IS).NE.0)GOTO 320
      IR=NSTOR(IS)
      WRITE(L8'IR)NM(IS)
  320 CONTINUE
      DO 330 IS=1,NMS
      IF(NSDAT(IS).EQ.0)GOTO 330
      IR=NSDAT(IS)
      READ(L8'IR)NM(IS)
  330 CONTINUE
      WRITE(6,*)FAL,FAL,FAL,FAL
      WRITE(6,*)WM
      WRITE(6,*)NM
 1111 RETURN
C***************************************************************************
      FUNCTION OMEGAN(NVOL,M,N,IS)
C*
C*
C*    CALCULATE THE (M,N,IS) ACOUSTIC NATURAL FREQUENCY OF SUBVOLUME
C*    NVOL.
C*
C*
      GOTO(10,20,30,40),IVTYP(NVOL)
C****   VOLUME TYPE #1. RETANGULAR PARALLELEPIPED
   10 OMEGAN=CO*PI*((M/VNODC(2,1,NVOL))**2+(N/VNODC(3,2,NVOL))**2+
     &(IS/VNODC(4,3,NVOL))**2)**0.5
      GOTO 1111
C****  VOLUME TYPE #2. CIRCULAR CYLINDER
   20 IF(M.NE.0) GOTO 22
      OMEGAN=-1.0
C  INITIALIZATION
      RLST=0.0
      MLST=M
      AKNM=0.0
      GOTO 1111
   22 IF(MLST.EQ.M) GOTO 26
      IF(N.EQ.0.AND.M.EQ.1)GOTO 26
      IT=1
      CALL ZERO(AKNM,RLST,N,VNODC(2,1,NVOL),VNODC(3,2,NVOL),IT)
      MLST=M
   26 OMEGAN=CO*((IS*PI/VNODC(4,3,NVOL))**2+AKNM**2)**0.5
      GOTO 1111
C****  VOLUME TYPE #3. CONCENTRIC CYLINDERICAL ANNULOUS
   30 IF(M.NE.0) GOTO 32
      OMEGAN=-1.0
C  INITIALIZATION
      RLST=0.0
```

```
      MLST=M
      AKNM=0.0
      GOTO 1111
   32 IF(MLST.EQ.M) GOTO 36
      IT=2
      CALL ZERO(AKNM,RLST,N,VNODC(4,2,NVOL),VNODC(2,1,NVOL),IT)
      MLST=M
   36 OMEGAN=CO*((IS*PI/VNODC(4,3,NVOL))**2+AKNM**2)**0.5
      GOTO 1111
C**** VOLUME TYPE #4.PERTURBED PARALLELEPIPED
  40  RLST=PI*((M/VNODC(2,1,NVOL))**2+(N/VNODC(3,2,NVOL))**2+
     &(IS/VNODC(4,3,NVOL))**2)**0.5
      R=VNODC(5,3,NVOL)-VNODC(4,3,NVOL)
      R=R/VNODC(4,3,NVOL)
      AKNM=0.0
      IF(N.EQ.0.AND.IS.EQ.0)GOTO 41
      IF(N.EQ.0)A1=-1./3.
      IF(N.NE.0)A1=1./N**2/PI**2
      AKNM=(-2.0*(IS*PI/VNODC(4,3,NVOL))**2*(1./3.-A1)-4./
     & VNODC(3,2,NVOL)**2)/((N*PI/VNODC(3,2,NVOL))**2+
     & (IS*PI/VNODC(4,3,NVOL))**2)
   41 CONTINUE
      WRITE(6,*)M,N,IS,VNODC(2,1,NVOL),VNODC(3,2,NVOL),
     & VNODC(4,3,NVOL),RLST,AKNM
      OMEGAN=CO*RLST*(1+2.*R*AKNM*((N*PI/VNODC(3,2,NVOL))**2
     &+(IS*PI/VNODC(4,3,NVOL))**2)/RLST**2)**0.5
      WRITE(6,*)OMEGAN
      GOTO 1111
C****
C****
 1111 RETURN
C*********************************************************************
      FUNCTION OMEGAO(IS,M,N)
C*
C*
C*   CALCULATE THE (M,N) OPENING ALLOWED FREQUENCY CONSTANTS
C*
C*
      GOTO(10,20,30),IOTYP(IS)
C****   OPENING TYPE #1. RETANGULAR
  10  OMEGAO=((M/ONODC(2,1,IS))**2+(N/ONODC(3,2,IS))**2)**0.5
      GOTO 1111
C****   OPENING TYPE #2. CIRCLE
   20 IF(M.NE.0) GOTO 22
      OMEGAO=-1.0
C  INITIALIZATION
      RLST=0.0
      MLST=M
      AKNM=0.0
      GOTO 1111
   22 IF(MLST.EQ.M) GOTO 26
      IF(N.EQ.0.AND.M.EQ.1)GOTO 26
      IT=1
      CALL ZERO(AKNM,RLST,N,ONODC(2,1,IS),ONODC(3,2,IS),IT)
      MLST=M
   26 OMEGAO=AKNM
      GOTO 1111
```

```
C****    OPENING TYPE #3. CONCENTRIC CIRCLE
   30 IF(M.NE.0) GOTO 32
      OMEGA0=-1.0
C  INITIALIZATION
      RLST=0.0
      MLST=M
      AKNM=0.0
      GOTO 1111
   32 IF(MLST.EQ.M) GOTO 36
      IT=2
      CALL ZERO(AKNM,RLST,N,ONODC(3,2,IS),ONODC(2,1,IS),IT)
      MLST=M
   36 OMEGA0=AKNM
      GOTO 1111
C****
 1111 RETURN
C*****************************************************************************
      FUNCTION OMEGAM(IS,M,N)
C*
C*
C*    CALCULATE STRUCTURAL NATURAL FREQUENCIES
C*
C*
      DIMENSION CF(4,11),AM(3,3),VK(3,3),VM(3,3),C(3,3),EWC(3,3),EVR(3)
     & ,EVI(3)
      WRITE(6,*)IS,M,N,ISTYP(IS),SC(1,IS)
      GOTO(10,20,30,40,50,60,70,80),ISTYP(IS)
C****    SURFACE TYPE #1. RETANGULAR SHAPE WITH FOURIER SERIES MODE SHAPE
   10 CONTINUE
C           NORMALLY PROVIDED AS DATA
      GOTO 1111
C****    SURFACE TYPE #2. ORTHOTROPIC RETANGULAR PANEL WITH SIMPLY
C****    SUPPORTED EDGES
   20 CONTINUE
      G1=M*1.
      G2=N*1.
      H1=G1**2
      H2=G2**2
      DXY=SC(1,IS)*SC(5,IS)+2.*SC(3,IS)
      OMEGAM=PI**2/SC(6,IS)**0.5*(G1**4*SC(1,IS)/SNODC(2,1,IS)**4
     &+ G2**4*SC(2,IS)/SNODC(3,2,IS)**4+2.*H1*H2*DXY/(SNODC(2,1,IS)**2
     & * SNODC(3,2,IS)**2))**0.5
      GOTO 1111
C****    SURFACE TYPE #3. CIRCULAR SHAPE WITH FOURIER SERIES MODE SHAPES
   30 CONTINUE
C           NORMALLY PROVIDED AS DATA
      GOTO 1111
C****    SURFACE TYPE #4. THIN,HOMOGENEOUS CIRCULAR PANEL WITH FIXED
C****    EDGES
   40 CONTINUE
      DATA((CF(J,I),I=1,11),J=1,4)/1.017,2.007,3.005,4.003,1.468,
     &2.483,3.488,4.491,1.8,2.927,3.948,4.959,2.274,3.354,4.391,
     &5.413,2.657,3.768,4.822,5.856,3.032,4.172,5.244,6.289,3.402,
     &4.569,5.658,6.715,3.767,4.961,6.066,7.135,4.129,5.347,6.469,
     &7.549,4.488,5.73,6.867,7.959,6.109,6.5,7.261,8.365/
      IF(N.LE.11.AND.M.LE.4)BETA=CF(M,N)
      IF(N.GT.11.OR.M.GT.4) BETA=M+(N-1)/2.
```

```
      OMEGAM=SC(1,IS)*BETA**2
      GOTO 1111
C****  SURFACE TYPE #5. FRAME STIFFENED CYLINDERICAL WHOLE SHELL
   50 CONTINUE
      AL=2*PI
   51 B=SNODC(3,2,IS)
      PBX=(M*PI*SNODC(3,2,IS)/SNODC(2,1,IS))
      QPA=((N-1)*PI/AL)
      VK(1,1)=SC(1,IS)/SC(2,IS)*(PBX**2+(1-SC(5,IS))/2*QPA**2)
      VK(2,2)=(1+SC(5,IS))/2.0*SC(1,IS)/SC(2,IS)*PBX**2+QPA**2
      VK(3,3)=1+SC(4,IS)/B**2/SC(4,IS)*(SC(3,IS)/SC(4,IS)*
     & PBX**4+2*SC(3,IS)/SC(4,IS)*PBX**2*QPA**2+QPA**4)
      VK(2,1)=(1+SC(5,IS))/2.0*SC(1,IS)/SC(2,IS)*PBX*QPA
      VK(1,2)=VK(2,1)
      VK(1,3)=SC(5,IS)*SC(1,IS)/SC(2,IS)*PBX
      VK(3,1)=VK(1,3)
      VK(2,3)=QPA
      VK(3,2)=VK(2,3)
      DO 52 I=1,3
      DO 52 J=1,3
   52 VM(I,J)=0.0
      VM(1,1)=SC(6,IS)*B**2/SC(2,IS)
      VM(2,2)=VM(1,1)
      VM(3,3)=VM(1,1)
      CALL GASINV(VM,3,DET)
      CALL MTXMPY(VK,VM,C,3,3,3)
      CALL EIGEN(C,AM,EWC,EVR,EVI,3,3,3,0)
      OMEGAM=EVR(3)
      GOTO 1111
C****  SURFACE TYPE #6. FRAME STIFFENED CYLINDERICAL SHELL SEGMENT
   60 AL =ATAN(SNODC(4,3,IS)/SNODC(4,2,IS))
      GOTO 51
C***
C****    SURFACE TYPE #7. BBN F.E. DATA MODEL
   70 GOTO 1111
C****    SURFACE TYPE #8. ORTHOTROPIC RETANGULAR PANEL WITH CLAMPED EDGES
   80 G1= M + 0.5
      G2= N + 0.5
      H1=G1**2*(1.0-2./(G1*PI))
      H2=G2**2*(1.0-2./(G2*PI))
      IF(M.EQ.1)H1=1.248
      IF(N.EQ.1)H2=1.248
      DXY=SC(1,IS)*SC(5,IS)+2.*SC(3,IS)
      OMEGAM=PI**2/SC(6,IS)**0.5*(G1**4*SC(1,IS)/SNODC(2,1,IS)**4
     &+ G2**4*SC(2,IS)/SNODC(3,2,IS)**4+2.*H1*H2*DXY/(SNODC(2,1,IS)**2
     & * SNODC(3,2,IS)**2))**0.5
      GOTO 1111
C****
 1111 RETURN
C***********************************************************************
      SUBROUTINE ZERO(AKNM,RLST,N,A,B,IT)
C*
C*  FIND THE NEXT ZERO OF THE EQUATION ,IT, AS HELD IN THE
C*  ROUTINE EQ
      STEP=.1
      X0=RLST+STEP
      X=X0
```

```
      CALL EQ(DETO,XO,N,A,B,IT)
      ER=0.01
      NI=10
   15 CONTINUE
      X=X+STEP
      CALL EQ(DET,X,N,A,B,IT)
      WRITE(6,*)XO,DETO,X,DET
      IF(DETO.LT.0.0.AND.DET.LT.0.0)GO TO 20
      IF(DETO.GT.0..AND.DET.GT.0.)GO TO 20
      FIRST=XO
      RAST=X
      GO TO 30
   20 XO=X
      DETO=DET
      GO TO 15
C******* NEWTON RAPHSON ITERATION *****************************************
   30 XXO=FIRST
      YRLST=DETO
      XXN=RAST
      YDETN=DET
      NIT=0
      YMAX=AMAX1(ABS(YRLST),ABS(YDETN))
   40 EPS=ABS(YDETN/YMAX)
      NIT=NIT + 1
      IF(EPS.LE.ER)GO TO 50
      IF(NIT.GT.NI) GO TO 50
      X1=XXN- XXO
      Y1=YDETN- YRLST
      XY1= X1/Y1
      X=XXN-YDETN * XY1
      CALL EQ(DET,X,N,A,B,IT)
      WRITE(6,*)X,DET,EPS
      S=SIGN(1.0,DET)
      S1=SIGN(1.0,YDETN)
      IF(S.EQ.S1.AND.ABS(DET).GT.ABS(YDETN)) GOTO 45
      XXO=XXN
      YRLST=YDETN
      XXN=X
      YDETN=DET
      GO TO 40
   45 XXN=X
      YDETN=DET
      GOTO 40
C*
   50 RLST=X
      AKNM=X*PI/A
 1111 RETURN
*C*********************************************************************
      SUBROUTINE EQ(DET,X,N,A,B,IT)
C*
C* CALCULATE THE VALUE OF A FUNCTION. THE FUNCTION IS USED
C* TO ESTABLISH ALLOWED FREQUENCY CONSTANTS FOR VOLUMES,OPENINGS,
C* AND SURFACES
C*
      GOTO(10,20),IT
C****  CIRCLE OR CIRCULAR CYLINDER
   10 XA=X*PI
```

```
      DET=BJP(XA,N)
      GOTO 1111
C****
C**** CONCENTRIC CIRCULAR ANNULOUS
   20 XA=X*PI
      XB=X*B/A
      DET=BJP(XA,N)*BYP(XB,N)-BJP(XB,N)*BYP(XA,N)
      GOTO 1111
 1111 RETURN
C************************************************************
      FUNCTION BJ(X,N)
C     COMPUTES THE J BESSEL FUNCTION OF THE FIRST KIND FOR A
C        GIVEN ARGUMENT X, AND A GIVEN ORDER N.
C     X=ARGUMENT OF THE J BESSEL FUNCTION
C     N=THE ORDER OF THE J BESSEL FUNCTION
C     D=REQUIRED ACCURACY
C     BJ=THE RESULTANT BESSEL FUNCTION
      DOUBLE PRECISION XD,Z,ZZ,VAR,VAL,SUM,TOTAL,BLJ
      DEFINE BSLJ(TOTP,TOTQ,ARG)=SQRT(2./(PI*X))*
     &  (TOTP*SIN(ARG)+TOTQ*COS(ARG))
      XD=DBLE(X)
      IF(X.GT.10.)GOTO 250
      IF(N.GT.55) GOTO 300
      IF(X.EQ.0.) GOTO 30
      M1=57-N
      Z=1.0D0
      ZZ=XD*XD
      SUM=0.0D0
      TOTAL=0.0D0
      BJ1=1.0D0
      DO 10 I=1,M1
      K=I-1
      VAR=2.D0**(2*K+N)
      TOTAL=SUM+BJ1*Z/FAC(I)/FAC(I+N)/VAR
      IF(TOTAL.EQ.0.D0)GOTO 5
      VAL=SUM/TOTAL
      IF(VAL.GT.DN.AND.VAL.LT.UP) GOTO 20
    5 BJ1=-BJ1
      Z=Z*ZZ
      SUM=TOTAL
   10 CONTINUE
   20 BLJ=XD**N*TOTAL
      BJ=REAL(BLJ)
      RETURN
   30 IF(N.GT.0) GOTO 40
      BJ=1.0
      RETURN
   40 BJ=0.0
      RETURN
C****  USE ASYMTOTIC SERIES SOLUTION
  250 IF(N.GT.8) GOTO 275
      CALL PSQS(N,X,TOTP,TOTQ,ARG)
      BJ=BSLJ(TOTP,TOTQ,ARG)
      RETURN
C****  USE ASYMTOTIC SERIES THE RECURSION WHEN N>8
  275 CALL PSQS(8,X,TOTP,TOTQ,ARG)
      BLJN=BSLJ(TOTP,TOTQ,ARG)
```

```
      CALL PSQS(7,X,TOTP,TOTQ,ARG)
      BLJNM1=BSLJ(TOTP,TOTQ,ARG)
      CALL RECUR(N,X,BLJN,BLJNM1,BJ)
      RETURN
  300 BJ=0.0
      RETURN
C*******************************************************************
C*******************************************************************
      FUNCTION BY(X,N)
C*
C*  CALCULATES THE NEUMANN FUNCTION
C*
      DOUBLE PRECISION XD,TOTAL,CUM,SUM,Z,ZZ,DIV,VAL,BLY,BLJ
      DEFINE BSLY(TOTP,TOTQ,ARG)=SQRT(2./(PI*X))*
     &  (TOTP*SIN(ARG)+TOTQ*COS(ARG))
      XD=DBLE(X)
      IF(X.GT.10.)GOTO 250
      IF(N.GT.55) GOTO 300
C***   CALCULATE BY SERIES DEFINITION
      IF(X.EQ.0.)GOTO 50
      TOTAL=0.D0
      CUM=0.D0
      SUM=0.D0
      Z=XD*XD/4.D0
      IF(N.EQ.0) GOTO 15
      ZZ=1.D0
      DO 10 I=1,N
      DIV=FAC(N-I+1)/FAC(I)
      CUM=CUM+DIV*ZZ
      ZZ=ZZ*Z
   10 CONTINUE
   15 ZZ=1.D0
      BY1=1.D0
      M1=57-N
      DO 30 I=1,M1
      DIV=ZZ/FAC(I)
      TOTAL=SUM+(PSI(I)+PSI(I+N))*BY1*DIV/FAC(I+N)
      VAL=SUM/TOTAL
      IF(VAL.GT.DN.AND.VAL.LT.UP) GOTO 40
   20 BY1=-BY1
      ZZ=ZZ*Z
      SUM=TOTAL
   30 CONTINUE
   40 DIV=((2.D0/XD)**N)/DPI
      BLJ=DBLE(BJ(X,N))
      BLY=(-DIV)*CUM+(2.D0/DPI)*DLOG(XD/2.D0)*BLJ-(((XD/2.D0)**N)/PI)
     & * TOTAL
      BY=PEAL(BLY)
      RETURN
   50 BY=-1.0E35
      RETURN
   60 BY=1.0E35
      RETURN
C****  USE ASYMTOTIC SERIES SOLUTION
  250 IF(N.GT.8) GOTO 275
      CALL PSQS(N,X,TOTP,TOTQ,ARG)
      BY=BSLY(TOTP,TOTQ,ARG)
```

```
      RETURN
C****  USE ASYMTOTIC SERIES THEN RECURSION FOR N>8
  275 CALL PSQS(8,X,TOTP,TOTQ,ARG)
      BLYN=BSLY(TOTP,TOTQ,ARG)
      CALL PSQS(7,X,TOTP,TOTQ,ARG)
      BLYN1=BSLY(TOTP,TOTQ,ARG)
      CALL RECUR(N,X,BLYN,BLYNM1,BY)
      RETURN
  300 BY=-1.35
      RETURN
C*****************************************************************
      SUBROUTINE PSQS(N,X,TOTP,TOTQ,ARG)
      DOUBLE PRECISION ATEX,BJ1,TRMP,TRMQ,SUMP,SUMQ,RJ,RK,U,VAL,TP,TQ,XD
      XD=DBLE(X)
      U=4.D0*N*N
      ATEX=8.D0*X
      BJ1=-1.D0
      TRMP=1.D0
      SUMP=1.0D0
      SUMQ=0.D0
      RJ=1.D0
      DO 10 M=2,56,2
      RK=RJ+2.D0
      TRMQ=TRMP*(U-RJ*RJ)/ATEX
      TRMP=TRMQ*(U-RK*RK)/ATEX
      TP=SUMP+BJ1*TRMP/FAC(M+1)
      BJ1=-BJ1
      TQ=SUMQ+BJ1*TRMQ/FAC(M)
      IF(TQ.EQ.0.D0)GOTO 5
      VAL=SUMQ/TQ
      IF(VAL.GT.DN.AND.VAL.LT.UP) GOTO 20
    5 SUMQ=TQ
      SUMP=TP
      RJ=RK+2.D0
   10 CONTINUE
   20 ARG=REAL(X-DPI*(N/2.D0+0.25D0))
      TOTP=REAL(TP)
      TOTQ=REAL(TQ)
      RETURN
C*******************************************************************
      SUBROUTINE RECUR(N,X,BSLN,BSLNM1,BSL)
      QTNT=2./X
      K=N-1
      DO 10 I=8,K
      BSLNP1=QTNT*I*BSLN-BSLNM1
      BSLNM1=BSLN
      BSLN=BSLNP1
   10 CONTINUE
      BSL=BSLN
      RETURN
C*******************************************************************
      FUNCTION BI(X,N)
C     COMPUTES THE I BESSEL FUNCTION(MODIFIED) FOR A GIVEN ARGUMENT
C        AND ORDER.
C     X=ARGUMENT OF THE I BESSEL FUNCTION
C     N=ORDER OF THE I BESSEL FUNCTION
C     BI=RESULTANT
```

```
C     N MUST BE GREATER THAN OR EQUAL TO ZERO
C
C     CHECK FOR ERRORS IN N AND X AND EXIT CONDITIONAL
C
      IER=0
      BI=1.0
      IF(N)150,15,10
10    IF(X)160,20,20
15    IF(X)160,17,20
17    RETURN
C
C     DEFINE TOLERANCE
C
20    TOL=1.E-4
C
C     IF ARGUMENT GT 12 AND GT N, USE ASYMPTOTIC FORM
C
      IF(X-12.)40,40,30
30    IF(X-FLOAT(N))40,40,110
C
C     COMPUT FIRST TERM OF SERIES AND SET INITIAL VALUE OF THE SUM
C
40    XX=X/2.
      FACTN=1.0
      IF(N-1)70,70,50
50    DO 60 I=2,N
      FI=I
60    FACTN=FACTN*FI
70    TERM=(XX**N)/FACTN
      BI=TERM
      XX=XX*XX
C
C     COMPUTE UP TO 30 TERMS, STOPPING WHEN ABS(TERM) LE ABS(SUM OF
C        TERM TIMES TOLERANCE
C
      DO 90 K=1,30
      IF(ABS(TERM)-ABS(BI*TOL))100,100,80
80    FK=K*(N+K)
      TERM=TERM*(XX/FK)
90    BI=BI+TERM
C
C     RETURN BI AS ANSWER
C
100   RETURN
C
C     X GT 12 AND X GT N, SO USE ASYMPTOTIC APPROXIMATION
C
110   FNT=4*N*N
      XX=1./(8.*X)
      TERM=1.
      BI=1.
      DO 130 K=1,30
      IF(ABS(TERM)-ABS(TOL*BI))140,140,120
120   FK=(2*K-1)**2
      TERM=TERM*XX*(FK-FNT)/FLOAT(K)
130   BI=BI+TERM
140   PI=3.141592653
```

```
      BI=BI*EXP(X)/SQRT(2.*PI*X)
      GO TO 100
  150 IER=1
      GO TO 100
  160 IER=2
      GO TO 100
C*************************************************************
      FUNCTION BJP(X,N)
C*
C* CALCULATE THE DERIVATIVE OF THE BESSEL FUNCTION OF THE FIRST
C* KIND OF ORDER N
C*
      IF(N.EQ.0)BJP=-1.0*BJ(X,N+1)
      IF(N.GT.0)BJp=0.5*(BJ(X,N-1)-BJ(X,N+1))
 1111 RETURN
C**************************************************************
      FUNCTION BYP(X,N)
C*
C* DERIVATIVE OF THE BESSEL FUNCTION OF THE SECOND KIND OF ORDER N
C*
      IF(N.EQ.0)BYP=-1.0*BY(X,N+1)
      IF(N.GT.0)BYp=0.5*(BY(X,N-1)-BY(X,N+1))
 1111 RETURN
C*****************************************************************
      FUNCTION BIP(X,N)
C*
C*  DERIVATIVE OF THE MODIFIED BESSEL FUNCTION OF THE FIRST KIND
      IF(N.EQ.0)BIP=-1.0*BI(X,N+1)
      IF(N.GT.0)BIP=0.5*(BI(X,N-1)-BI(X,N+1))
      RETURN
C****************************************************************
      SUBROUTINE MODEST(MXM,MMAX,NMAX,ISMAX,MSX,NSX)
C*
C*       ESTIMATE THE MAXIMUM INDICIES FOR FREQUENCY CALCULATIONS
C*
      DO 100 NVOL=1,NV
      GOTO(10,20,30),IVTYP(NVOL)
C******* VOLUME TYPE #1. RETANGULAR PARALLELEPIPED
   10 N=0
      S=0
      M1=NINT(FAL*VNODC(2,1,NVOL)/CO/PI)
      M=0
      N=0
      IS1=NINT(FAL*VNODC(4,3,NVOL)/CO/PI)
      M=0
      S=0
      N1=NINT(FAL*VNODC(3,2,NVOL)/CO/PI)
      IF(M1.GT.MMAX)MMAX=M1
      IF(N1.GT.NMAX)NMAX=N1
      IF(IS1.GT.ISMAX)ISMAX=IS1
      GOTO 100
C***** VOLUME TYPE #2. CIRCULAR CYLINDER
   20 CONTINUE
      MMAX=7
      NMAX=7
      ISMAX=7
C***** VOLUME TYPE #3. CONCENTRIC CIRCULAR CYLINDER
```

```
   30 CONTINUE
      MMAX=7
      NMAX=7
      ISMAX=7
  100 CONTINUE
C****  SCALE MAX MODE RESULTS
      DO 150 I=1,MMAX
      IF(MMAX*NMAX*ISMAX.LE.4*NAM)GOTO 160
      MMAX=MMAX-1
      NMAX=NMAX-1
      ISMAX=ISMAX-1
  150 CONTINUE
  160 CONTINUE
C*****
C***** IT IS ASSUMED THAT THE TOTAL NUMBER OF ACOUSTIC MODES
C       MXM> .GE. MSX*MSX OF THE SURFACE. THE MXM IS TO SIZE THE
C       WORKING ARRAYS. CALCULATION OF STURCTURAL AND ACOUSTIC
C       FREQUENCIES ARE LIMITED TO THE FREQUENCIES WITHIN THE RANGE
C       OF INTEREST BY THE INDIVIDUAL CALCULATION ROUTINES.
C*
      MXM=MMAX*NMAX*ISMAX
  170 IF(MXM.LT.NAM)MMAX=MMAX+1
      MXM=MMAX*NMAX*ISMAX
      IF(MXM.LT.NAM)NMAX=NMAX+1
      MXM=MMAX*NMAX*ISMAX
      IF(MXM.LT.NAM)ISMAX=ISMAX+1
      MXM=MMAX*NMAX*ISMAX
      IF(MXM.LT.NAM)GOTO 170
      MSX=(1.*MXM)**.5
      IF(MSX**2.LT.MXM)MSX=MSX+1
      IF(MSX**2.LT.MXM)MSX=MSX+1
      IF(MMAX**2.GT.MXM)MSX=MSX-1
      NSX=MSX
      RETURN
      END

FTN 349C IBANK 1395 DBANK 240 COMMON
```

```
,S   XX.BNDCAL,XX.
1OR1A   12/14/83-18:38(29,)
C*************************************************************************
      SUBROUTINE BNDCAL(BNDWN,BNDWM,WNMC,WM,ZM,ZN,NM,CENTF,NSTOR,NS,NTOB
     &,NAM,NSMX,NMS,BW,EPS,NFS,IPRE,ISTYP,L8,L9,L15,NSDAT,IOP,NPROB)
C*
C*
C*      BNDCAL CALCULATES THE BANDWIDTH OF IMPORTANT MODES AROUND EACH
C*      BAND OF MODAL ANALYSIS INTEREST
C*
C*
      DIMENSION BNDWN(NTOB,2),BNDWM(NTOB,2),WNMC(NAM),WM(3,NSMX),ZM(NSMX
     &  ),CENTF(NTOB),ZN(NAM),NSTOR(NMS),NM(NMS),IPRE(4),ISTYP(NS),
     & NSDAT(NMS)
      IF(IPRE(1).EQ.1)GOTO 200
      IF(NPROB.NE.0.AND.IOP.EQ.5)GOTO 500
      ZH=ZN(1)
      DO 100 I=1,NAM
      IF(ZN(I).GT.ZH) ZH=ZN(I)
  100 CONTINUE
      DO 200 NOB=1,NTOB
      WC=CENTF(NOB)
      W1=WC*(1-BW)
      W2=WC*(1+BW)
      DO 150 I=1,NAM
      IF(WNMC(I).GT.WC) GOTO 155
  150 CONTINUE
      I=I-1
  155 WRB=WNMC(I)
      IF(ABS(WC-WNMC(I-1)).LT.ABS(WNMC(I)-WC)) WRB=WNMC(I-1)
      IF(I.LE.1)WRB=WNMC(1)
      CALL VICAL(WB,W1,W2,WRB,ZH)
      CALL RCAL(WMAX,WMIN,WB,WC,W1,W2,ZH,EPS)
      BNDWN(NOB,1)=WC-WMIN
      BNDWN(NOB,2)=WMAX-WC
  200 CONTINUE
C****  CALCULATION OF BNDWM
      IF(IPRE(3).EQ.1)GOTO 1111
      DO 500 IS=1,NMS
      IF(NSDAT(IS).NE.0)GOTO 500
      IF(ISTYP(IS).EQ.0)GOTO 500
      ZH=0.0
      IR=2*NFS+NSTOR(IS)
      READ(L8'IR)(ZM(J),J=1,NTOB)
      DO 250 I=1,NTOB
  250 IF(ZM(I).GT.ZH)ZH=ZM(I)
  300 CONTINUE
      IR=NSTOR(IS)
      READ(L9'IR) WM
      DO 400 NOB=1,NTOB
      WC=CENTF(NOB)
      DO 350 I=1,NM(IS)
      IF(WM(1,I).GT.WC) GOTO 355
  350 CONTINUE
      I=I-1
  355 WRB=WM(1,I)
      IF(I.LE.1)WRB=WM(1,1)
```

```
      W1=WC*(1-BW)
      W2=WC*(1+BW)
      CALL VICAL(WB,W1,W2,WRB,ZH)
      CALL RCAL(WMAX,WMIN,WB,WC,W1,W2,ZH,EPS)
      BNDWM(NOB,1)=WC-WMIN
      BNDWM(NOB,2)=WMAX-WC
  400 CONTINUE
      IR=NSTOR(IS)
      WRITE(L15'IR)BNDWM
  500 CONTINUE
      WRITE(6,*)BNDWN
      WRITE(6,*)BNDWM
 1111 RETURN
C******************************************************************
      SUBROUTINE VICAL(WD,W1,W2,WRB,ZH)
      COMPLEX X,Y
      G=(4*ZH**2*WRB**2-2*WRB**2)
      AL=-G/2.0
      PHI=(4*WRB**4-G**2)**0.5
      X=CMPLX(AL,PHI)
      Y=CSQRT(X)
      ALPHA1=REAL(Y)
      PHI1=AIMAG(Y)
      AAZ=-1.0/(4*ALPHA1)
      BBZ=0.0
      CCZ=-AAZ
      DDZ=-BBZ
      TERM1=(AAZ/2)*ALOG(W2**2+2*ALPHA1*W2+ALPHA1**2+PHI1**2)+((BBZ-
     *ALPHA1*AAZ)/PHI1)*ATAN((W2+ALPHA1)/PHI1)-((AAZ/2)*ALOG(W1**2+2*
     *ALPHA1*W1+ALPHA1**2+PHI1**2)+((BBZ-ALPHA1*AAZ)/PHI1)*ATAN((W1+
     *ALPHA1)/PHI1))
      TERM2=(CCZ/2)*ALOG(W2**2-2*ALPHA1*W2+ALPHA1**2+PHI1**2)+((CCZ*
     *ALPHA1+DDZ)/PHI1)*ATAN((W2-ALPHA1)/PHI1)-((CCZ/2)*ALOG(W1**2-2*
     *ALPHA1*W1+ALPHA1**2+PHI1**2)+((CCZ*ALPHA1+DDZ)/PHI1)*ATAN((W1-
     *ALPHA1)/PHI1))
      WD=(TERM1+TERM2)/(W2-W1)
      RETURN
C******************************************************************
      SUBROUTINE RCAL(WMAX,WMIN,WB,WC,W1,W2,ZH,EPS)
      DO 100 K=1,2
      C=EPS*WB
      DW=BW*WRB
      W3=WRB
      IF(WRB.LT.WC.AND.K.EQ.2)W3=WC
      IF(WRB.GT.WC.AND.K.EQ.1)W3=WC
      CALL VICAL(W,W1,W2,W3,ZH)
      DETO=W-C
      WRO=W3
      I=(K.EQ.1)WR=WRO-DW
      IF(K.EQ.2)WR=WRO+DW
      NI= 10
      ER=5.0
   10 CALL VICAL(W,W1,W2,WR,ZH)
      DET=W-C
      IF(DETO.LT.0.0.AND.DET.LT.0.0)GOTO 20
      IF(DETO.GT.0.0.AND.DET.GT.0.0)GOTO 20
      FIRST=WRO
```

ORIGINAL PAGE IS
OF POOR QUALITY

```
      RAST=WR
      IF(K.EQ.2) GOTO 30
      FIRST=WR
      RAST=WRO
      GOTO 30
   20 WRO=WR
      DW=BW*WR
      IF(K.EQ.1)WR=WRO-DW
      IF(K.EQ.2)WR=WRO+DW
      DETO=DET
      IF(WR.LT.50.)GOTO 51
      GOTO 10
C****  NEWTON RAPHSON ITERATION
   30 J=2
      XFQYO=FIRST
      YDETO=DETO
      XFQYN=RAST
      YDETN=DET
      NIT=0
      YMAX=AMAX1(ABS(YDETO),ABS(YDETN))
   40 EP=ABS(YDETN/YMAX)
      NIT=NIT+1
      IF(EP.LE.ER) GOTO 50
      IF(NIT.GT.NI) GOTO 50
      X1=XFQYN-XFQYO
      Y1=YDETN-YDETO
      XY1=X1/Y1
      WR=XFQYN-YDETN*XY1
      IF(WR.LT.50.)GOTO 51
      CALL VICAL(W,W1,W2,WR,ZH)
      DET=W-C
      XFQYO=XFQYN
      YDETO=YDETN
      XFQYN=WR
      YDETN=DET
      GOTO 40
   50 CONTINUE
      IF(WR.LT.FIRST.OR.WR.GT.RAST)WR=(FIRST+RAST)/2.0
   51 IF(WR.LT.50.)WR=0.
      IF(K.EQ.1)WMIN=WR
      IF(K.EQ.2)WMAX=WR
  100 CONTINUE
      RETURN
      END

FTN 896 IBANK 380 DBANK
```

ORIGINAL PAGE IS
OF POOR QUALITY

```
,S  XX.MULCV,XX.
1ORIA  12/14/83-18:38(56,)
C*******************************************************************************
      SUBROUTINE MULCV(WNMC,EIMTX,A,D,VLNM,VLNM1,WN,WMO,IGEMOV,
     &AREAO,V,CENTF,NAM,NAMMC,NOO,NOM,N1,N,NMO,NV,NI,DFQY,
     &NTOB,LBAND,MBAND,L16,L17,IOPMD,MCP,NG,VAL,TOT)
C*
C*
C*    PERFORMS ACOUSTIC COMPONENT MODE SYNTHESIS
C*
C*
      COMMON/AREA3/ZERO,EPS,BW,ER
      DIMENSION WNMC(NAM),EIMTX(NOM,NOO),
     &VLNM(NAM,NMO),VLNM1(NAM,NMO),WN(4,NAM,NV),WMO(3,NMO,NOO)
     &,IGEMOV(2,NOO),AREAO(NOO),V(NV),CENTF(NTOB),IOPMD(MCP,NV)
     &,VAL(NMO),TOT(NMO)
      DOUBLE PRECISION A(N1,N),D(N,N),DETBS,FTST
      DOUBLE PRECISION VLFT,VRT,FQYL,FQYR,DF,YMAX,DER,VRAST,RAST,VLTST
      NAM1=12
      WRITE(6,*)NOM,NOO,NG
      ISTP=0
      FOTLO=CENTF(LBAND)*(1.-BW)
      FOTHI=CENTF(MBAND)*(1.+BW)
      DO 4 I=1,MCP
      DO 4 J=1,NV
    4 IOPMD(I,J)=1
      ICT=NG
      WNMC(1)=0.0
      K=2
      FQYL=DFLOAT(FOTLO)
      DF=FQYL*DFLOAT(DFQY)
      WRITE(6,*)DF,DF
      CALL GOVERN(FQYL)
      CALL DETER(VLFT)
      WRITE(6,*)DF,DF
      DER=DFLOAT(ER)
C*******  STEP THROUGH FREQUENCY RANGE
   10 FQYR=FQYL+DF
      CALL GOVERN(FQYR)
      CALL DETER(VRT)
      WRITE(6,*)FQYL,VLFT,FQYR,VRT
      IF(FQYL.EQ.FQYR)STOP 'ENDLESS LOOP BEGUN'
      IF(FQYR.GT.DFLOAT(FOTHI).AND.K.LE.2)STOP 'NO FREQUENCIES IN RANGE
      IF(VLFT*VRT)40,30,20
   20 VLFT=VRT
      FQYL=FQYR
      IF(ISTP.GE.2)DF=FQYL*DFLOAT(DFQY)
      IF(K.LE.2)DF=FQYR*.11500
      ISTP=ISTP+1
      GOTO 10
   30 FTST=FQYL
      VLTST=VLFT
      GOTO 90
C******  CLOSE IN ON NATURAL FREQUENCY
   40 IF(ISTP.LT.2)THEN
      DF=DF/2.D0
      GOTO 10
```

```
      ELSE
      ENDIF
      YMAX=DMAX1(DABS(VLFT),DABS(VRT))
      RAST=FQYR
      VRAST=VRT
      DO 80 NIT=1,NI
      FTST=(FQYL*VRT-FQYR*VLFT)/(VRT-VLFT)
      CALL GOVERN(FTST)
      CALL DETER(VLTST)
      WRITE(6,*)K,FTST,VLTST
      IF(DABS(VLTST/YMAX).LE.DER)GOTO 90
      IF((VLTST*VLFT).LT.0.D0)GOTO 70
      FQYL=FTST
      VLFT=VLTST
      GOTO 80
   70 FQYR=FTST
      VRT=VLTST
   80 CONTINUE
C****  STORE RESULT AND PREPARE FOR NEXT STEP
   90 WNMC(K)=REAL(FTST)
      CALL GOVERN(FTST)
      CALL VEC
      IF(K.GE.NAM1)GOTO 100
      FQYL=RAST
      VLFT=VRAST
      ICT=ICT-1
      IF(ICT.LE.0)CALL OPMD(REAL(FTST),K)
      IF(ICT.LE.0)ICT=NG
      K=K+1
      ISTP=0
      GO TO 10
  100 CONTINUE
      WRITE(6,*)WNMC
C
      RETURN
C*************************************************************************
      SUBROUTINE GOVERN(FQY)
      DOUBLE PRECISION FQY
C****  FORMS THE GOVERNING MATRIX FOR ACOUSTIC COMPONENT MODE SYNTHESIS
      DO 10 I=1,NOO*NOM
      DO 10 J=1,NOO*NOM
   10 D(I,J)=0.0D0
      DO 30 I=1,NOO
      DO 30 J=1,NOO
      IF(J.GT.I)GOTO 30
      IF(I.NE.J) GO TO 20
      KV=IGEMOV(1,I)
      SGN=1.0
      CALL EMTX(KV,I,J,FQY,SGN)
      KV=IGEMOV(2,J)
      SGN=-1.0
      CALL EMTX(KV,I,J,FQY,SGN)
      IF(I.EQ.J) GO TO 30
   20 KV=0
      IF(IGEMOV(1,I).EQ.IGEMOV(1,J).OR.IGEMOV(1,I).EQ.IGEMOV(2,J))
     * KV=IGEMOV(1,I)
      IF(IGEMOV(2,I).EQ.IGEMOV(1,J).OR.IGEMOV(2,I).EQ.IGEMOV(2,J))
```

```
     * KV=IGEMOV(2,I)
      IF(KV.EQ.0) GO TO 30
      L=2
      IF(IGEMOV(1,I).EQ.IGEMOV(1,J).OR.IGEMOV(2,I).EQ.IGEMOV(2,J))
     * L=1
      SGN=(-1.)**L
      CALL EMTX(KV,I,J,FQY,SGN)
   30 CONTINUE
      IF(NOO.EQ.1)GOTO 45
      DO 40 I=1,NOO*NOM
      DO 40 J=I,NOO*NOM
  40  D(I,J)=D(J,I)
   45 CONTINUE
      DETBS=DABS(D(1,1))
      DO 47 I=1,NOO*NOM
      DO 47 J=1,NOO*NOM
  47  D(I,J)=D(I,J)/DETBS
      RETURN
C***********************************************************************
      SUBROUTINE EMTX(NVOL,I,J,FQY,SGN)
      DOUBLE PRECISION FQY
      DOUBLE PRECISION S,S1,S2
      IF(IGEMOV(1,I).EQ.NVOL) INV=1
      IF(IGEMOV(2,I).EQ.NVOL) INV=2
      IR=(INV-1)*NOO+I
      READ(L17'IR) VLNM
      IF(IGEMOV(1,J).EQ.NVOL)INV=1
      IF(IGEMOV(2,J).EQ.NVOL)INV=2
      IR=(INV-1)*NOO+J
      READ(L17'IR) VLNM1
C**** SELECT THE MOST IMPORTANT NAMMC ACOUSTIC MODES AND THE
C**** OPENING MODE SET FOR THE NAMMC ACOUSTIC MODES
      M=IOPMD(K/NG+1,NVOL)
    5 CONTINUE
      L=0
      DO 50 NR=M,M+NOM-1
      L=L+1
      M1=(I-1)*NOM+L
      J1=0
      DO 40 MR=M,M+NOM-1
      J1=J1+1
      M2=(J-1)*NOM+J1
      S=0.D0
      DO 10 NWN=1,NAM
      S2=DFLOAT(WN(1,NWN,NVOL))**2-FQY**2
      IF(DABS(S2).LT.1.D0)S2=1.D0
      S1=DFLOAT(VLNM1(NWN,MR)*VLNM(NWN,NR))/S2
      S=S+S1
   10 CONTINUE
   30 D(M1,M2)=(S/DFLOAT(V(NVOL)/AREAO(I) /AREAO(J))+D(M1,M2))
     & *DFLOAT(SGN)
   40 CONTINUE
   50 CONTINUE
  111 CONTINUE
      RETURN
C**********************************************************************
      SUBROUTINE VEC
```

```
      DO 60 J=1,N
      DO 60 I=1,N1
      A(I,J)=D(I,J)
   60 CONTINUE
      M=1
      CALL DPINV(A,N1,M,N1,DETBS)
      DO 90 I=1,NOO
      DO 90 J=1,NOM
      II=NOM*(I-1)+J
      EIMTX(J,I)  = REAL(A(II,N))
   90 CONTINUE
      EIMTX(NOM,NOO)=-1.0
      WRITE(L16'K)EIMTX
      WRITE(6,*)WNMC(K)
      WRITE(6,*)EIMTX
  112 CONTINUE
       RETURN
C***********************************************************************
      SUBROUTINE DETER(DET)
      DOUBLE PRECISION S,DET
C*
C*  EFFICIENTLY CALCULATES DETERMINANT OF A SPARSE MATRIX
      DET=1.D0
      NM1=N-1
      DO 100 J=1,NM1
      S=D(J,J)
      DET=DET*S
      JP1=J+1
      DO 50 I=J,N
   50 D(J,I)=D(J,I)/S
      DO 75 J1=JP1,N
      IF(D(J1,J).EQ.0.D0)GOTO 75
      S=D(J1,J)/D(J,J)
      DO 60 I=J,N
   60 D(J1,I)=D(J1,I)-D(J,I)*S
   75 CONTINUE
  100 CONTINUE
      DET=DET*DETBS
      RETURN
C***********************************************************************
C*****************************************************************
      SUBROUTINE OPMD(W,K)
      DO 100 NVOL=1,NV
      DO 40 I=1,NMO
   40 VAL(I)=0.0
      DO 95 IS=1,NOO
      INV=0
      IF(IGEMOV(1,IS).EQ.NVOL)INV=1
      IF(IGEMOV(2,IS).EQ.NVOL)INV=2
      IF(INV.EQ.0)GOTO 95
      IR=(INV-1)*NOO+IS
      READ(L17'IR)VLNM
      DO 55 NR=1,NMO
      DO 50 NWN=1,NAM
      S2=WN(1,NWN,NVOL)**2-W**2
      IF(ABS(S2).LT.1.)S2=1.0
      VAL(NR)=VAL(NR)+VLNM(NWN,NR)**2/S2
```

```
   50 CONTINUE
      WRITE(6,*)NR,VAL
      IF(VAL(NR).EQ.0)STOP 'NMO TOO HIGH'
   55 CONTINUE
      TOT(1)=0.0
      DO 60 I=1,NOM
   60 TOT(1)=TOT(1)+VAL(I)
      DO 70 I=2,NMO-NOM
   70 TOT(I)=TOT(I-1)-VAL(I-1)+VAL(I+NOM-1)
      TOTHI=TOT(1)
      DO 80 I=1,NMO
      IF(TOT(I).LT.TOTHI)GOTO 80
      TOTHI=TOT(I)
      ITOT=I
   80 CONTINUE
   95 CONTINUE
      IOPMD(K/NG+1,NVOL)=ITOT
  100 CONTINUE
      WRITE(6,*)K
      WRITE(6,*)(IOPMD(K,I),I=1,NV)
      NAMMC=NAMMC
      WMO(1,1,1)=WMO(1,1,1)
      RETURN
      END

FTN 1466 IBANK 580 DBANK 4 COMMON
```

ORIGINAL PAGE IS
OF POOR QUALITY

```
,S   XX.VPNMC,XX.
1CR1A  12/14/83-18:39(17,)
C*****************************************************************
      SUBROUTINE VPNMC(WNMC,WN,NAM,NV,IGEMOV,NOO,NOM,AREAO,NMO,EIMTX,
     *PNMC,INDPN,NAMMC,VLNM,V,NPROBN,NAMT,NVT,L5,L6,L16,L17,IOPMD,
     *MCP,NG)
C*
C*
C*   CALCULATE THE MULTIPLE CAVITY ACOUSTIC CONSTANTS OF CONSTRAINT
C*
C*
      DIMENSION WNMC(NAM),WN(4,NAM,NV),IGEMOV(2,NOO),AREAO(NOO)
     *,VLNM(NAM,NMO),EIMTX(NOM,NOO),PNMC(NAMMC),INDPN(NV,NAM)
     *,V(NV),IOPMD(MCP,NV)
      CHARACTER*70 PLACE
      PLACE='SUBROUTINE VPNMC'
      WRITE(6,*)PLACE
      WRITE(6,*)MCP,NG,NAMMC
      WRITE(6,*)IOPMD
      PLACE='IGEMOV'
      WRITE(6,*)PLACE
      WRITE(6,*)IGEMOV
      DO 9 I=1,NV
      DO 8 J=1,NAM
C****  SELECT THE NEAREST NAMMC MODES AROUND EACH WNMC
      DO 4 NWN=1,NAM
    4 IF(WN(1,NWN,I).GT.WNMC(J)) GO TO 5
    5 INDPN(I,J)=NWN-INT(NAMMC/2+0.5)
      IF(INDPN(I,J).LE.0) INDPN(I,J)=1
    8 CONTINUE
C****
      IR=(NPROBN-1)*NVT+I
      WRITE(L6'IR,ERR=111)(INDPN(I,J),J=1,NAM)
    9 CONTINUE
      WRITE(6,*)INDPN
      DO 6 I=1,NAMMC
      PNMC(I)=0.0
    6 CONTINUE
      DO 7 NVOL=1,NV
      PNMC(1)=1.0
      IR=(NPROBN-1)*NAMT*NVT+(NVOL-1)*NAMT+1
      WRITE(L5'IR)PNMC
    7 CONTINUE
      DO 1000  NWN=2,NAM
      IF(NWN.GE.13)GOTO 1000
      READ(L16'NWN)EIMTX
      PLACE='EIMTX'
      WRITE(6,*)PLACE
      WRITE(6,*)NWN
      WRITE(6,*)EIMTX
      DO 500 NVOL=1,NV
C****  SELECT THE NOM MODES FOR USE
      M=IOPMD(NWN/NG+1,NVOL)
C****
      DO 15 I=1,NAMMC
   15 PNMC(I)=0.0
      DO 100 ISUR=1,NOO
```

ORIGINAL PAGE IS
OF POOR QUALITY

```
              IF(IGEMOV(1,ISUR).EQ.NVOL)GO TO 10
              IF(IGEMOV(2,ISUR).NE.NVOL) GO TO 100
              SGN = -1.0
              GO TO 20
        10    SGN= +1.0
        20    VAL=0.0
              IF(IGEMOV(1,ISUR).EQ.NVOL) INV=1
              IF(IGEMOV(2,ISUR).EQ.NVOL) INV=2
              IR=(INV-1)*NOO+ISUR
              READ(L17'IR)VLNM
              PLACE='VLNM VALUES'
              WRITE(6,*)ISUR,NVOL
              DO 21 I8=1,15
        21    WRITE(6,*)(VLNM(I8,J8),J8=1,NMO)
              NWNMC=INDPN(NVOL,NWN)-1
              DO 40 I=1,NAMMC
              VAL=0.0
              NWNMC=NWNMC+1
              NR=M-1
              DO 30 J=1,NOM
              NR=NR+1
              VAL= VLNM(NWNMC,NR)*EIMTX(J,ISUR)+ VAL
        30    CONTINUE
        40    PNMC(I)=PNMC(I)+SGN*(AREAO(ISUR)*WNMC(NWN)**2*VAL)
             & /(WN(1,NWNMC,NVOL)**2-WNMC(NWN)**2)/V(NVOL)
       100    CONTINUE
              IR=(NPROBN-1)*NAMT*NVT+(NVOL-1)*NAMT+NWN
              WRITE(L5'IR,ERR=111) PNMC
              WRITE(6,*)NWN
              WRITE(6,*)PNMC
       500    CONTINUE
      1000    CONTINUE
       111    CONTINUE
              RETURN
              END

FTN 536 IBANK 372 DBANK
```

ORIGINAL PAGE IS
OF POOR QUALITY

```
,S   XX.PRMCAL,XX.
1ORIA  12/14/83-18:39(17,)
      SUBROUTINE PRMCAL(VLNMO,BPQ,VMNPA,RMN,VLNM,CN,ZANN,RJA,AMN,
     &WMO,OTM,OORG,ONODC,WM,STM,SORG,SNODC,WNMC,WN,VTM,VORG,VNODC,
     &IGEMOV,ISV,IOTYP,ISTYP,IVTYP,MASSUR,NM,NSDAT,NSTOR,BNDWM,BNDWN,
     &CENTF,ZNDATA,IPF,EX,PNMC,INDPN,AREA,AREAO,NOM,NOO,NAM,NMS,MX,NX,
     &NS,MNSS,NTOB,NSMX,NPFC,MXS,NV,MXV,NAMMC,NMO,V,SC,NSC,ZMDAT,ZM,LN)
      COMMON /AREA1/IOP,MOP(4),IPRE(4),IN,IOUT
      COMMON/AREA2/L0,L1,L2,L3,L4,L5,L6,L7,L8,L9,L10,L11,L12,L13,
     & L14,L15,L16,L17,L18
      COMMON/AREA3/ZERO,EPS,BW
      COMMON/AREA4/NFV,NFS,NPFCT,NTOBT,NVT,NST,MXVT,MXST,NAMT,
     & NSMT,MXT,NXT,NAMMCT,NSEACT
      COMMON/AREA5/NPROB,NPROBN,MTAPE,NTAPE,LBAND,MBAND,IHBAND
      COMMON/AREA8/RO,CO,VOL,PREF,PI
      COMMON/AREA9/FAC,PSI,DPI,DN,UP
      DOUBLE PRECISION FAC(57),PSI(60),DPI,DN,UP
      DIMENSION VLNMO(NAM,NMO),BPQ(MX,NX,NSMX),VMNPA(NAM),VLNM(NAM),
     &CN(NAM,NS),ZANN(NAM),RJA(NTOB),
     &WMO(3,NMO,NOO),OTM(3,3,NOO),OORG(3,NOO),ONODC(MXS,3,NOO),WM(3,NSMX
     &),STM(3,3,NS),SORG(3,NS),SNODC(MXS,3,NS),WNMC(NAM),WN(4,NAM,NV),
     &VTM(3,3,NV),VORG(3,NV),VNODC(MXV,3,NV),IGEMOV(2,NOO),ISV(NS),
     &IOTYP(NOO),ISTYP(NS),IVTYP(NV),MASSUR(MNSS,NMS),NM(NMS),NSDAT(NS),
     &NSTOR(NS),BNDWM(NTOB,2),BNDWN(NTOB,2),CENTF(NTOB),ZNDATA(NTOB,NS),
     &IPF(NMS),EX(NPFC,NMS),PNMC(NAMMC),INDPN(NAM,NV),AREA(NS),
     &AREAO(NOO),RMN(NAM,NV),V(NV),SC(NSC,NS),AMN(NAM,NV),ZMDAT(NTOB),
     & ZM(NSMX)
C*
C*
C*  PARAMETERS NEEDED FOR MODAL ANALYSIS ARE CALCULATED
C*  PRMCAL DIRECTS THE CALCULATION FLOW BASED ON VARIOUS USER DEFINED
C*  VARIABLES AND OPTIONS. THE FOLLOWING ROUTINES ARE IN PRMCAL:
C*    MULPRM: OPENING/VOLUME COUPLING FACTORS
C*    GENMAS: MULTIPLE CAVITY GENERALIZED ACOUSTIC MASS
C*    LNMCAL: MASTER SURFACE/MULTIPLE CAVITY COUPLING FACTORS
C*    ZANCAL: ACOUSTIC CAVITY DAMPING FACTORS
C*    ZMCAL: STRUCTURAL DAMPING
C*    RJACAL: JOINT ACCEPTANCE-FREQUENCY DOMAIN
C*
C*
C*          SURI:  SURFACE INTEGRATION BY GAUSSIAN QUADRATURE
C*          GLO:
C*            F:
C*
C*          SLX: SURFACE INTEGRATION LIMITS AND GEOMETRY DEFINITION
C*          SLY:
C*        SGEOM:
C*
C*          OLX: OPENING INTEGRATION LIMITS AND GEOMETRY DEFINITION
C*          OLY:
C*        OGEOM:
C*
C*          SIM: MASTER SURFACE STRUCTURAL MODE SHAPE
C*          OIM: OPENING MODE SHAPE
C*           FN: MULTIPLE CAVITY ACOUSTIC MODE SHAPE
C*        FNCAL: SUBVOLUME ACOUSTIC MODE SHAPE
C*         PFCF: SURFACE PRESSURE FIELD
```

```
C*       NORMS: STRUCTURAL MODE SHAPE NORMALIZATION FACTOR
C*       NORMA: SUBVOLUME ACOUSTIC MODE SHAPE NORMALIZATION FACTOR
C*
C*       ALIGN: ANALYTICAL CALCULATION OF THE OPENING/VOLUME COUPLING,LNM
C*         SOX:
C*         SOY:
C*         SOZ:
C*
C*        ANGF: ANALYTICAL CALCULATION OF GENERALIZED FORCE
C*       RVBJA:
C*        ATJA:
C*        PWJA:
C*
C*   PORTIONS OF MOST OF THE ABOVE ROUTINES ARE SUBJECT TO UPDATING
C*   WHEN ADDITIONAL SURFACE ELEMENTS,VOLUME ELEMENTS, AND/OR EXTERNAL
C*   PRESSURE FIELD TYPES ARE ADDED TO THE PROGRAM LIBRARIES.
C*
C*
C****  OPENING/VOLUME COUPLING FACTORS
      IF(LN.EQ.2) GOTO 10
       IF(LN.EQ.3) GOTO 30
      CALL MULPRM
      GOTO 100
C****  MULTIPLE CAVITY GENERALIZED ACOUSTIC MASS
   10 CALL GENMAS
C****  ACOUSTIC CAVITY DAMPING FACTORS
   20 IF(IPRE(2).EQ.1) GOTO 100
      CALL ZANCAL
      GOTO 100
C****   STRUCTURAL MODAL DAMPING ASSINGMENT
   30 CONTINUE
      CALL ZMCAL
C****  MASTER SURFACE/MULTIPLE CAVITY COUPLING FACTORS
      IF(IPRE(3).EQ.1) GOTO 40
      IF(IOP.EQ.5)GOTO 40
      CALL LNMCAL
C****  JOINT ACCEPTANCE - FREQUENCY DOMAIN
   40 CONTINUE
      IF(IPRE(4).EQ.1)GOTO 100
      CALL RJACAL
C****
 100  RETURN
C*******************************************************************
      SUBROUTINE MULPRM
C*  OPENING/VOLUME COUPLING FACTORS ARE CALCULATED IN MULPRM. THE
C*  COUPLING FACTORS ARE USED IN MULCV TO CALCULATE THE MULTIPLE
C*  CAVITY ACOUSTIC RESPONSE CHARACTERISTICS. THE LNM CAN BE EITHER
C*  ANALYTICALLY OR NUMERICALLY CALCULATED. WHEN ANY NEW OPENING OR
C*  VOLUME TYPE IS ADDED TO THE PROGRAM LIBRARIES, THE LNM SOLUTION
C*  IS ASSUMED TO BE NUMERIC UNLESS OTHERWISE NOTED IN THIS ROUTINE.
C*
C*
      DIMENSION IA(3),CF(4,3)
      IW=1
      NOM=NOM
C*   CALCULATE THE ACOUSTIC MODE NORMALIZATION FACTOR FOR SUBCAVITIES
C*
```

```
      DO 10  NVOL=1,NV
      DO 10  N=1,NAM
      CALL NORMA(DA,NVOL,N)
   10 AMN(N,NVOL)=DA
      DO 1000 ISUR=1,NOO
      IS=ISUR
      DO 1000 INV=1,2
      NVOL=IGEMOV(INV,ISUR)
C****  IDENTIFY THE LNM ANALYTIC SOLUTION ,LTYP, TO BE USED
      LTYP=0
      IF(IOTYP(ISUR).EQ.1.AND.IVTYP(NVOL).EQ.1)LTYP=1
      IF(IOTYP(ISUR).EQ.2.AND.IVTYP(NVOL).EQ.2)LTYP=2
      IF(IOTYP(ISUR).EQ.3.AND.IVTYP(NVOL).EQ.2)LTYP=3
      IF(IOTYP(ISUR).EQ.3.AND.IVTYP(NVOL).EQ.3)LTYP=4
C*
      IF(LTYP.NE.0)GOTO 150
C****   NUMERICAL CALCULATION OF LNM
      DO 100 NWN=1,NAM
      DO 100 MWM=1,NMO
      VLNMO(NWN,MWM)=0.0
      VLNMO(NWN,MWM)=SURI(IS,ISUR,NVOL,MWM,NWN,IW)/AREAO(ISUR)
     & /AMN(NWN,NVOL)
  100 CONTINUE
      GOTO 900
C****  ANALYTIC CALCULATION OF LNM
  150 CALL ALIGN(LTYP,ISUR,NVOL,IA,CF)
      DO 200 NWN=1,NAM
      DO 200 MWM=1,NMO
      BX=SOX(LTYP,ISUR,NVOL,IA,CF,NWN,MWM)
      BY=SOY(LTYP,ISUR,NVOL,IA,CF,NWN,MWM)
      BZ=SOZ(LTYP,ISUR,NVOL,IA,CF,NWN,MWM)
      VLNMO(NWN,MWM)=BX*BY*BZ/AREAO(ISUR)/AMN(NWN,NVOL)
      IF(ABS(VLNMO(NWN,MWM)).LT.ZERO)VLNMO(NWN,MWM)=0.0
  200 CONTINUE
C**** STORE VLNMO IN TEMPORARY FILE
  900 IR=(INV-1)*NOO+ISUR
      WRITE(L17'IR) VLNMO
 1000 CONTINUE
 1111 RETURN
C*******************************************************************
      SUBROUTINE GENMAS
C*
C*
C*    CALCULATE THE GENERALIZED ACOUSTIC MASS OF THE MULTIPLE CAVITY
C*    SYSTEM.ALSO CALCULATE THE PORTION OF THE GENERALIZED MASS IN
C*    EACH SUBVOLUME.
C*
C*
      IF(IPRE(1).EQ.0) GOTO 10
      IR=NPROB
      READ(L3'IR)WNMC
      IR=NFV + NPROB
      READ(L3'IR)VMNPA
      IR=2*NFV + NPROB
      READ(L3'IR)ZANN
      GOTO 1111
   10 IF(NV.NE.1) GOTO 300
```

```
      DO 200 I=1,NAM
      RMN(I,1)=1.0
      CALL NORMA(DMNS,1,I)
      WNMC(I)=WN(1,I,1)
  200 VMNPA(I)=DMNS**2
      IR=NPROBN
      WRITE(L4'IR)RMN
      VOL=V(1)
      GOTO 1111
  300 VMNPA(1)=1.0
      DO 301 I=1,NV
  301 RMN(1,I)=V(I)/VOL
      DO 600 NWN=2,NAM
      VMNPA(NWN)=0.0
      IF(NWN.GE.12)GOTO 600
      DO 500 NVOL=1,NV
      IR=(NPROBN-1)*NAMT*NVT+(NVOL-1)*NAMT+NWN
      READ(L5'IR)(PNMC(I),I=1,NAMMC)
      A=0.0
      DO 400 NWNMC=1,NAMMC
      A=PNMC(NWNMC)**2+A
  400 CONTINUE
      VMNPA(NWN)= VMNPA(NWN) + A/VOL* V(NVOL)
      RMN(NWN,NVOL)=A*V(NVOL)/VOL
  500 CONTINUE
      DO 550 I=1,NV
 550  RMN(NWN,I)=RMN(NWN,I)/VMNPA(NWN)
  600 CONTINUE
      WRITE(L4'NPROBN)RMN
 1111  CONTINUE
      IF(IPRE(1).EQ.1) GOTO 1112
      IR= NPROBN
      WRITE(L2'IR) WN
      IR=NPROBN
      WRITE(L3'IR)WNMC
      IR=NFV+NPROBN
      WRITE(L3'IR)VMNPA
C
C
 1112 RETURN
C***********************************************************************
      SUBROUTINE ZANCAL
C*
C*
C*  ACOUSTIC CAVITY DAMPING FACTORS ARE CALCULATED FROM THE ACOUSTIC
C*  ABSORPTION OF EACH SURFACE AND THE ACOUSTIC MODE SHAPES. ALL
C*  INTEGRATIONS ARE NUMERICAL. THE ACOUSTIC ABSORPTION OVER EACH
C*  SUBSURFACE IS ASSUMED TO BE CONSTANT. THE END RESULT IS AN
C*  ESTIMATION OF THE ACOUSTIC DAMPING OF EACH CAVITY MODE. IF THE
C*  CAVITY DAMPING IS GIVEN AS DATA, ZANCAL LOADS PLACES THE
C*  INFORMATION INTO THE CORRECT ARRAYS IN THE CORRECT UNITS.
C*
C*   ABSORBTION COEF= 8*RO*CO/ZA WHERE ZA IS SURFACE IMPEDANCE
C*    DATA IS IN THE FORM OF ABSORPTION COEFFICIENT UNLESS
C*    EXPERIMENTAL CAVITY DAMPING IS SPECIFIED. THEN IT IS
C*    IN THE FORM OF C/CC (PERCENT OR CRITICAL DAMPING)
      IW=3
```

```
      IF(MOP(3).NE.1) GOTO 20
C****  IF CAVITY DAMPING SUPPLIED BY DATA
      ISUR=1
      DO 10 NWN=1,NAM
   10 ZANN(NWN)=ZA(WNMC(NWN),ISUR)
      GOTO 100
C****  CALCULATION OF CN AND ZANN
   20 CONTINUE
      DO 15 NVOL=1,NV
      DO 15 N=1,NAM
      CALL NORMA(DA,NVOL,N)
   15 AMN(N,NVOL)=DA
      DO 30 NWN=1,NAM
   30 ZANN(NWN)=0.0
      IR=NFV+NPROB
C****   LOAD PREVIOUSLY CALCULATED CN IF STILL VALID
      IF(IPRE(1).EQ.1) READ(L2'IR) CN
C****
      DO 60 ISUR=1,NS
      IF(ISTYP(ISUR).EQ.0) GOTO 60
      IS=ISUR
      NVOL=ISV(ISUR)
      DO 50 NWN=1,NAM
      ZAN=ZA(WNMC(NWN),ISUR)
C
      IF(IPRE(1).EQ.1) GOTO 40
      IR=(NPROBN-1)*NAMT*NVT+(NVOL-1)*NAMT+NWN
      READ(L5'IR)PNMC
      CN(NWN,ISUR)=SURI(IS,ISUR,NVOL,MWM,NWN.IW)
C
C
   40 CM=CN(NWN,ISUR)/ZAN
      ZANN(NWN)=ZANN(NWN)+RO*CO**2*CM/(2*VOL*VMNPA(NWN)*WNMC(NWN))
   50 CONTINUE
   60 CONTINUE
      IR=NFV+NPROBN
      WRITE(L2'IR) CN
  100 CONTINUE
      IR=2*NFV+NPROBN
      WRITE(L3'IR)ZANN
 1111 RETURN
      FUNCTION ZA(W,ISUR)
      DO 10 I=1,NTOB
      W2=CENTF(I)+BW*CENTF(I)
      IF(W.LE.W2) GOTO 15
   10 CONTINUE
      I=I-1
   15 ZA=ZNDATA(I,ISUR)/8./RO/CO
      IF(MOP(3).EQ.1)ZA=ZNDATA(I,ISUR)
      RETURN
C********************************************************************
      SUBROUTINE ZMCAL
C*
C*  ASSIGN THE DAMPING TO EACH STRUCTURAL MODE BASED ON THE BAND
C*  AVERAGE DAMPING CATA
C*
      DO 100 ISUR=1,NMS
```

```
      IF(ISTYP(ISUR).EQ.0) GOTO 100
      IR=2*NFS+NSTOR(ISUR)
      READ(L8'IR)ZMDAT
      IR=NSTOR(ISUR)
      READ(L9'IR)WM
      DO 75 MWM=1,NM(ISUR)
      DO 50 NOB=LBAND,MBAND
      W1=CENTF(NOB)*(1-BW)
      W2=CENTF(NOB)*(1+BW)
      IF(WM(1,MWM).GT.W2.OR.WM(1,MWM).LT.W1)GOTO 60
   50 CONTINUE
      NOB=NOB-1
   60 ZM(MWM)=ZMDAT(NOB)
   75 CONTINUE
      IR=NFS+NSTOR(ISUR)
      WRITE(L9'IR)ZM
      IR=NSTOR(ISUR)
      WRITE(L8'IR)NM(ISUR),ISTYP(ISUR),AREA(ISUR)
  100 CONTINUE
      RETURN
C******************************************************************
      SUBROUTINE LNMCAL
C*
C*
C*  MASTER SURFACE/MULTIPLE CAVITY COUPLING FACTORS,VLNM,ARE CALCULATED
C*  FOR THOSE STRUCTURAL/ACOUSTIC MODAL COMBINATIONS THAT HAVE
C*  SIGNIFICANT CONTRIBUTION TO THE SOLUTION. ALL INTEGRATIONS ARE
C*  NUMERICAL.
C*
C*
      IW=2
      DO 100 IS=1,NMS
      IF(ISTYP(IS).EQ.0) GOTO 100
      IF(IPRE(1).EQ.1.AND.NSDAT(IS).NE.0) GOTO 100
      IR=NSTOR(IS)
      READ(L9'IR)((WM(I,J),I=1,3),J=1,NM(IS))
      READ(L15'IR)BNDWM
C*  NOTE THAT THE AMN(NSM,1) ARRAY IS USED TO EFFICIENTLY
C*  NORMALIZE THE STRUCTURAL MODE SHAPES SUCH THAT THE
C*  GENERALIZED MASS IS 1.0
      DO 10 MWM=1,NM(IS)
   10 CALL NORMS(AMN(MWM,1),IS,MWM)
C**** SKIP IF SURFACE TYPE DOES NOT USE BPQ
      GOTO(20,30,20,30,30,30,20,30),ISTYP(IS)
C
C
   20 READ(L12'IR)(((BPQ(I,J,K),I=1,MX),J=1,NX),K=1,NM(IS))
C***
   30 CONTINUE
      DO 60 MWM=1,NM(IS)
      M=1
      DO 50 NWN=1,NAM
      VLNM(NWN)=0.0
C**** USE BNDWM AND BNDWN TO LIMIT LNM CALCULATIONS TO SIGNIFICANT TERMS
C
      WC=(WNMC(NWN)+WM(1,MWM))/2.0
      DO 35 NOB=1,NTOB
```

```
      IF(CENTF(NOB).GT.WC)GOTO 36
   35 CONTINUE
   36 CONTINUE
      M=NOB
      IF(WC-WM(1,MWM).GT.BNDWM(NOB,1))GOTO 50
      IF(WM(1,MWM)-WC.GT.BNDWM(NOB,2))GOTO 50
      IF(WC-WNMC(NWN).GT.BNDWN(NOB,1))GOTO 50
      IF(WNMC(NWN)-WC.GT.BNDWN(NOB,2))GOTO 50
C
C
C****
   37 CONTINUE
      DO 40 I=1,MNSS
      IF(MASSUR(I,IS).EQ.0) GOTO 50
      ISUR=MASSUR(I,IS)
      NVOL=ISV(ISUR)
      IF(NV.GT.1)THEN
      IR=(NPROBN-1)*NAMT*NVT+(NVOL-1)*NAMT+NWN
      READ(L5'IR)PNMC
      ELSE
      ENDIF
   40 VLNM(NWN)=VLNM(NWN)+ SURI(IS,ISUR,NVOL,MWM,NWN,IW)/AMN(MWM,1)
      IF(ABS(VLNM(NWN)).LT.ZERO)VLNM(NWN)=0.0
      VLNM(NWN)=VLNM(NWN)/AREA(IS)
   50 CONTINUE
      IR=(IS-1)*NSMT+MWM+NSMT*NST*(NPROBN-1)
      WRITE(L7'IR)VLNM
   60 CONTINUE
  100 CONTINUE
 1111 CONTINUE
      RETURN
C******************************************************************
      SUBROUTINE RJACAL
C*
C*
C*  RJACAL CALCULATES THE JOINT ACCEPTANCE FOR MODAL ANALYSIS
C*  GIVEN A RANDOM EXTERNAL PRESSURE FIELD
C*
C*
      DIMENSION DX(8),DA(8)
      NGP=8
      IW=0
      NGP1=NGP/2
      CALL GLO(DA,DX,-1.0,1.0,NGP,NGP1)
      DO 100 IS=1,NMS
      IF(ISTYP(IS).EQ.0) GOTO 100
      ISUR=IS
      NVOL=0
C****  IF DATA ON MASS STORAGE, THEN SKIP TO THE NEXT SURFACE
      IF(IPF(IS).EQ.0) GOTO 100
C**** READ IN MODAL RESPONSE DATA
      IR=NSTOR(IS)
      READ(L9'IR) WM
      READ(L15'IR)BNDWM
C*  NOTE THAT THE AMN(NSM,1) ARRAY IS USED TO EFFICIENTLY
C*  NORMALIZE THE STRUCTURAL MODE SHAPES SUCH THAT THE
C*  GENERALIZED MASS IS 1.0
```

```
      DO 10 MWM=1,NM(IS)
   10 CALL NORMS(AMN(MWM,1),IS,MWM)
C****  BRANCH TO ANALYTIC CALCULATION OF RJA IF THE MODE DESCRIPTION
C****  IS IN FOURIER SERIES FORM OR IS IT IS TO BE ANALYTICALLY CALCULAT
      IF(IPF(IS).EQ.4)GOTO 60
      GOTO(60,60,60,30,30,30,60,60),ISTYP(IS)
C
C
C****  NUMERICAL CALCULATION OF RJA
   30 CONTINUE
      DO 50 MWM=1,NM(IS)
      DO 40 NOB=LBAND,MBAND
      RJA(NOB)=0.0
      IF(CENTF(NOB)-WM(1,MWM).GT.BNDWM(NOB,1))GOTO 40
      IF(WM(1,MWM)-CENTF(NOB).GT.BNDWM(NOB,2))GOTO 40
C
      CALL SLX(AA,BB,IS)
      H3=(BB-AA)/2.0
      G3=(BB+AA)/2.0
      Q3=0.0
C
      DO 8 L=1,NGP
      XM=H3*DX(L) +G3
      AK=H3*DA(L)
      CALL SLY(C2,D2,XM,IS)
      H1=(D2-C2)/2.0
      G1=(D2+C2)/2.0
      Q1=0.0
C
      DO 6 I=1,NGP
      UI=H1*DX(I)+G1
      AI=H1*DA(I)
      C1=AA
      D1=BB
      H2=(D1-C1)/2.0
      G2=(D1+C1)/2.0
      Q2=0.0
C
      DO 4 J=1,NGP
      VJ=H2*DX(J)+G2
      AJ=H2*DA(J)
      CALL SLY(C,D,VJ,IS)
      H=(D-C)/2.0
      G=(D+C)/2.0
      Q=0.0
C
      DO 2 K=1,NGP
      WK=H*DX(K)+G
      CALL SGEOM(XM,UI,XV,YV,ZV,GFC,AJP,IS,ISUR,NVOL,IW)
      CALL SGEOM(VJ,WK,XV,YV,ZV,GF,AJ, IS,ISUR,NVOL,IW)
    2 Q=Q+DA(K)*SIM(XM,UI,IS,MWM)*SIM(VJ,WK,IS,MWM)*GF*GFC*
     &           AJ*AJP*PFCF(XM,UI,VJ,WK,CENTF(NOB),IS,IW)
    4 Q2=Q2+AJ*H*Q
    6 Q1=Q1+AI*Q2
    8 Q3=Q3+AK*Q1
      IF(ABS(Q3).LT.ZERO)Q3=0.0
C
```

```
      RJA(NOB)=Q3/AMN(MWM,1)**2/AREA(IS)**2
   40 CONTINUE
      IR=(NSTOR(IS)-1)*NSMT+MWM
      WRITE(L10'IR)RJA
   50 CONTINUE
      GOTO 100
C
C
C**** ANALYTICAL CALCULATION OF RJA
   60 IF(IPF(IS).EQ.4)CALL PFCAL(IS)
      IF(IPF(IS).EQ.4)GOTO 100
      IF(ISTYP(IS).NE.2.AND.ISTYP(IS).LT.7) CALL ANJAFS(IS)
      IF(ISTYP(IS).EQ.2.OR.ISTYP(IS).GE.7) CALL ANJASS(IS)
  100 CONTINUE
 1111 RETURN
C*****************************************************************
      FUNCTION SURI(IS,ISUR,NVOL,MWM,NWN,IW)
C*
C*
C*  NUMERICAL INTEGRATIONS FOR ALL PARAMETERS EXCEPT THE JOINT
C*  ACCEPTANCE ARE OBTAINED BY SURI WITH GAUSSIAN QUADRATURE
C*  THE INTEGRATION IS TWO DIMENSIONAL AND CARRIED OUT IN THE SURFACE
C*  ELEMENT'S COORDINATE SYSTEM.  THE INTEGRATION REQUIRES
C*  APPROPRIATELY DESCRIBED SURFACE LIMITS,THE SURFACE INTEGRATION
C*  JACOBIAN, AND THE GEOMETRY CORRECTION FACTOR. THE SURFACE LIMITS
C*  ARE SET IN SLX AND SLY. THE JACOBIAN AND THE GEOMETRY CORRECTION
C*  FACTOR ARE CALCULATED IN SGEOM.
      DIMENSION DX(8),DA(8)
      NGP=8
      NGP1=NGP/2
      CALL GLO(DA,DX,-1.0,1.0,NGP,NGP1)
      IF(IW.EQ.1) CALL OLX(AA,BB,ISUR)
      IF(IW.NE.1) CALL SLX(AA,BB,ISUR)
      H1=(BB-AA)/2.
      G1=(BB+AA)/2.
      Q1=0.
      DO 4 I=1,NGP
      UI=H1*DX(I)+G1
      AI=H1*DA(I)
      IF(IW.EQ.1)CALL OLY(C,D,UI,ISUR)
      IF(IW.NE.1)CALL SLY(C,D,UI,ISUR)
      H=(D-C)/2.
      G=(D+C)/2.
      Q=0.
      DO 3 J=1,NGP
      VJ=H*DX(J)+G
    3 Q=Q+DA(J)*F(UI,VJ,IS,ISUR,NVOL,IW,NWN,MWM)
    4 Q1=Q1+AI*H*Q
      SURI=Q1
      RETURN
C*****************************************************************
      SUBROUTINE GLO(DA,DX,C,D,NGP,NGP1)
      DIMENSION DX(NGP),DA(NGP),XX(8),A1(8)
      DATA (XX(I),A1(I), I=1,4)/
     & .9602898564,.1012285362
     &,.7966664774,.2223810344
     &,.5255324099,.3137066458
```

```
     &,.1834346424,.3626837833/
      DMC=0.500*(D-C)
      DPC=0.500*(D+C)
      DO 2 I=1,NGP1
      NI=(NGP+1)-I
      DX(I)=-DMC*XX(I)+DPC
      DX(NI)=DMC*XX(I)+DPC
      DA(I)=DMC*A1(I)
    2 DA(NI)=DMC*A1(I)
      RETURN
C**********************************************************************
      FUNCTION F(XI,YI,IS,ISUR,NVOL,IW,NWN,MWM)
      IF(IW.NE.1) CALL SGEOM(XI,YI,XV,YV,ZV,GF,AJ,IS,
     &ISUR,NVOL,IW)
      GOTO(10,20,30,40),IW
C****   CALCULATE LNM FOR MULCV
  10  CALL OGEOM(XI,YI,XV,YV,ZV,ISUR,NVOL,AJ)
      F=OIM(XI,YI,ISUR,MWM)*FNCAL(XV,YV,ZV,NVOL,NWN)*AJ
      GOTO 1111
C****   CALCULATE LNM FOR STRUCTURE/MULTIPLE CAVITY
  20  F=SIM(XI,YI,IS,MWM)*FN(XV,YV,ZV,NVOL,NWN)*GF*AJ
      GOTO 1111
C****   CALCULATE CN FOR ACOUSTIC DAMPING
  30  F=FN(XV,YV,ZV,NVOL,NWN)**2*GF*AJ
      GOTO 1111
C****   CALCULATE QMW FOR GENERALIZED FORCE IN FREQUENCY DOMAIN
   40  F=SIM(XI,YI,IS,MWM)*PFCF(XC,YC,XP,YP,WC,IS,IW)*GF*AJ
      GOTO 1111
C****
 1111 RETURN
C*******************************************************************
C*  SURFACE INTEGRATION LIMITS:SLX,SLY
C*      SURFACE TYPES:  #1. RETANGULAR SHAPE WITH FOURIER SERIES MODE
C*                          SHAPE DESCRIPTION.
C*                      #2. THIN,HOMOGENEOUS,RETANGULAR PANEL WITH
C*                          SIMPLY SUPPORTED EDGES.
C*                      #3. CIRCULAR SHAPE WITH FOURIER SERIES MODE
C*                          SHAPE DESCRIPTION.
C*                      #4. THIN,HOMOGENEOUS,CIRCULAR PANEL WITH FIXED
C*                          EDGES.
C*                     #5. FRAME STIFFENED ORTHOTROPIC WHOLE SHELL
C*                     #6. FRAME STIFFENED ORTHOTROPIC SHELL SEGMENT
C*
C********************************************************************
      SUBROUTINE SLX(AA,BB,ISUR)
C*
C*  THE INTEGRATION LIMITS IN THIS COORDINATE DIRECTION ARE CONSTANTS
C*
      GOTO(10,20,30,40,50,60,70,80),ISTYP(ISUR)
C**** SURFACE ELEMENT TYPE #1.
  10   AA=0.0
      BB=SNODC(2,1,ISUR)
      GOTO 1111
C****  SURFACE ELEMENT TYPE #2.
  20   AA=SNODC(4,1,ISUR)
      BB=SNODC(5,1,ISUR)
      GOTO 1111
```

```
C**** SURFACE ELEMENT TYPE #3.
   30  CONTINUE
      AA=0.0
      BB=SNODC(2,1,ISUR)
      GOTO 1111
C**** SURFACE ELEMENT TYPE #4.
   40  CONTINUE
      AA=0.0
      BB=SNODC(2,1,ISUR)
      GOTO 1111
C****   SURFACE ELEMENT TYPE #5.
   50 AA=SNODC(4,1,ISUR)
      BB=SNODC(5,1,ISUR)
      GOTO 1111
C****   SURFACE ELEMENT TYPE #6.
   60 GOTO 50
C****  SURFACE ELEMENT TYPE #7.
   70 GOTO 20
C****  SURFACE ELEMENT TYPE #8.
   80 GOTO 20
 1111 RETURN
C*****************************************************************
      SUBROUTINE SLY(C,D,UI,ISUR)
C*
C*  THE INTEGRATION LIMITS IN THIS COORDINATE DIRECTION CAN BE CONSTANT
C*  OR A FUNCTION OF THE FIRST COORDINATE
      C=UI
      GOTO(10,20,30,40,50,60,70,80),ISTYP(ISUR)
C****  SURFACE ELEMENT TYPE #1.
   10  C=0.0
      D=SNODC(3,2,ISUR)
      GOTO 1111
C****  SURFACE ELEMENT TYPE #2.
   20  C=SNODC(4,2,ISUR)
      D=SNODC(6,2,ISUR)
      GOTO 1111
C****  SURFACE ELEMENT TYPE #3.
   30  CONTINUE
      C=0.0
      D=SNODC(3,2,ISUR)
      GOTO 1111
C****  SURFACE ELEMENT TYPE #4.
   40 CONTINUE
      C=0.0
      D=2*PI
      GOTO 1111
C****  SURFACE ELEMENT TYPE #5.
   50 CONTINUE
      C=ARCOS(SNODC(4,2,ISUR)/SNODC(3,2,ISUR))
      D=APCOS(SNODC(5,2,ISUR)/SNODC(3,2,ISUR))
      IF(D.LT.ZERO)D=2.*PI
      IF(SNODC(5,3,ISUR).LT.0.)D=D+PI
      GOTO 1111
C****  SURFACE ELEMENT TYPE #6.
   60 GOTO 50
C****  SURFACE ELEMENT TYPE #7.
   70 GOTO 20
```

```
C****  SURFACE ELEMENT TYPE #8.
   80 GOTO 20
C****
 1111 RETURN
C*****************************************************************************
      SUBROUTINE SGEOM(XI,YI,XV,YV,ZV,GF,AJ,IS,ISUR,NVOL,IW)
C*
C*
C*    SGEOM CALCULATES SEVERAL GEOMETRY RELATED FACTORS FOR EACH
C*    SURFACE
C*      1. THE THIRD DIMENSION,ZC,OF THE SURFACE AS A FUNCTION OF XC,YC
C*      2. THE JACOBIAN OF THE SURFACE'S COORDINATE SYSTEM AT XC,YC,ZC
C*      3. THE POSITION OF THE SURFACE POINT XC,YC,ZC IN THE ORIENTATION
C*         COORDINATE SYSTEM OF THE ADJACENT SUBVOLUME
C*
C*
      GOTO(10,20,30,40,50,60,70,80),ISTYP(ISUR)
C**** SURFACE ELEMENT TYPE #1.
   10  ZC=0.0
      XC=XI
      YC=YI
      AJ=1.0
      GF=1.0
      GOTO 200
C**** SURFACE ELEMENT TYPE #2.
   20 CONTINUE
      GOTO 10
C****  SURFACE ELEMENT TYPE #3.
   30  ZC=0.0
      XC=XI
      YC=YI
      AJ=1.0
      GF=1.0
      GOTO 200
C****  SURFACE ELEMENT TYPE #4.
   40 ZC=0.0
      XC=XI*COS(YI)
      YC=XI*SIN(YI)
      GF=1.0
      AJ=XI
      GOTO 200
C****  SURFACE ELEMENT TYPE #5.
   50 CONTINUE
      XC=XI
      YC=SNODC(3,2,ISUR)*SIN(YI)
      ZC=SNODC(3,2,ISUR)*COS(YI)
      AJ=SNODC(3,2,ISUR)
      GF=1.0
      GOTO 200
C****  SURFACE ELEMENT TYPE #6.
   60 GOTO 50
C**** SURFACE ELEMENT TYPE #7.
   70 IF(SC(2,IS).LT.0.)GOTO 10
      R=SC(2,IS)
      ZC=(R**2-YI**2)**0.5-(R**2-(SNODC(3,2,IS))**2)**0.5
      XC=XI
      YC=YI
```

```
      GF=(1+YI**2/(R**2-YI**2))**0.5
      AJ=1.0
      GOTO 200
C*****  SURFACE ELEMENT TYPE #8.
   80 GOTO 20
C
C
C****  CALCULATE THE MASTER SURFACE AND SUBVOLUME COORDINATES
  200 CONTINUE
      IF(IW.GE.4)GOTO 1111
      X=STM(1,1,ISUR)*XC+STM(1,2,ISUR)*YC+STM(1,3,ISUR)*ZC+SORG(1,ISUR)
      Y=STM(2,1,ISUR)*XC+STM(2,2,ISUR)*YC+STM(2,3,ISUR)*ZC+SORG(2,ISUR)
      Z=STM(3,1,ISUR)*XC+STM(3,2,ISUR)*YC+STM(3,3,ISUR)*ZC+SORG(3,ISUR)
      XP=X-VORG(1,NVOL)
      YP=Y-VORG(2,NVOL)
      ZP=Z-VORG(3,NVOL)
      XV=VTM(1,1,NVOL)*XP+VTM(1,2,NVOL)*YP+VTM(1,3,NVOL)*ZP
      YV=VTM(2,1,NVOL)*XP+VTM(2,2,NVOL)*YP+VTM(2,3,NVOL)*ZP
      ZV=VTM(3,1,NVOL)*XP+VTM(3,2,NVOL)*YP+VTM(3,3,NVOL)*ZP
 1111 RETURN
C*******************************************************************
C*  OPENING INTEGRATION LIMITS
C*     OPENING TYPES :  #1. RETANGLE
C*                      #2. CIRCLE
C*                      #3. CONCENTRIC CIRCULAR ANNULOUS
C*
C*******************************************************************
      SUBROUTINE OLX(AA,BB,ISUR)
C****  INTEGRATION LIMITS IN THIS COORDINATE DIRECTION ARE CONSTANTS
      GOTO(10,20,30),IOTYP(ISUR)
C****  OPENING ELEMENT TYPE #1.RETANGLE
   10 AA=0.0
      BB=ONODC(2,1,ISUR)
      GOTO 1111
C****  OPENING ELEMENT TYPE #2.CIRCLE
   20 AA=0.0
      BB=ONODC(2,1,ISUR)
      GOTO 1111
C****  OPENING ELEMENT TYPE #3.CONCENTRIC CIRCULAR ANNULOUS
   30 AA=ONODC(3,2,ISUR)
      BB=ONODC(2,1,ISUR)
      GOTO 1111
C****
 1111 RETURN
C******************************************************************
      SUBROUTINE OLY(C,D,UI,ISUR)
C*
C*  INTEGRATION LIMITS IN THIS COORDINATE DIRECTION CAN BE CONSTANTS
C*  OR A FUNCTION OF THE FIRST COORDINATE DIRECTION
C*
      C=UI
      GOTO(10,20,30),IOTYP(ISUR)
C****   OPENING ELEMENT TYPE #1. RETANGLE
   10 C=0.0
      D=ONODC(3,2,ISUR)
      GOTO 1111
C****   OPENING ELEMENT TYPE #2. CIRCLE
```

```
   20 C=0.0
      D=2*PI
      GOTO 1111
C****   OPENING ELEMENT TYPE #3. CONCENTRIC CIRCULAR ANNULOUS
   30 C=0.0
      D=2*PI
      GOTO 1111
C*****
 1111 RETURN
C*********************************************************************
      SUBROUTINE OGEOM(XI,YI,XV,YV,ZV,ISUR,NVOL,AJ)
C*
C*
C*  OGEOM CALCULATES THE VOLUME COORDINATE SYSTEM POINT XV,YV,ZV
C*  FROM THE OPENING COORDINATE SYSTEM POINT XC,YC
C*
      GOTO(10,20,30),IOTYP(ISUR)
C**** OPENING TYPE #1. RETANGLE
   10 XC=XI
      YC=YI
      AJ=1.0
      GOTO 200
C**** OPENING TYPE #2. CIRCLE
   20 XC=XI*COS(YI)
      YC=XI*SIN(YI)
      AJ=XI
      GOTO 200
C**** OPENING TYPE #3.CONCENTRIC CIRCLES
   30 GOTO 20
  200 CONTINUE
      ZC=0.0
      X=OTM(1,1,ISUR)*XC+OTM(1,2,ISUR)*YC+OTM(1,3,ISUR)*ZC+OORG(1,ISUR)
      Y=OTM(2,1,ISUR)*XC+OTM(2,2,ISUR)*YC+OTM(2,3,ISUR)*ZC+OORG(2,ISUR)
      Z=OTM(3,1,ISUR)*XC+OTM(3,2,ISUR)*YC+OTM(3,3,ISUR)*ZC+OORG(3,ISUR)
      XP=X-VORG(1,NVOL)
      YP=Y-VORG(2,NVOL)
      ZP=Z-VORG(3,NVOL)
      XV=VTM(1,1,NVOL)*XP+VTM(1,2,NVOL)*YP+VTM(1,3,NVOL)*ZP
      YV=VTM(2,1,NVOL)*XP+VTM(2,2,NVOL)*YP+VTM(2,3,NVOL)*ZP
      ZV=VTM(3,1,NVOL)*XP+VTM(3,2,NVOL)*YP+VTM(3,3,NVOL)*ZP
      RETURN
C*******************************************************************
      FUNCTION SIM(XC,YC,IS,MWM)
C*
C*
C*  STRUCTURAL MODE SHAPES FOR EACH SURFACE TYPE
C*
C*
      SIM=0.0
      M=WM(2,MWM)
      N=WM(3,MWM)
      GOTO(10,20,30,40,50,60,70,80),ISTYP(IS)
C****  TYPE #1. RETANGULAR SHAPE WITH FOURIER SERIES MODE DESCRIPTION
  10  XL=SNODC(2,1,IS)
      YL=SNODC(3,2,IS)
      DO 11 J=1,MX
      DO 11 K=1,NX
```

```
   11 SIM=SIM+BPQ(J,K,MWM)*SIN(J*PI*XC/XL)*SIN(K*PI*YC/YL)
      GOTO 1111
C****   TYPE #2. THIN, HOMOGENEOUS,RETANGULAR PANEL WITH SIMPLY
C****                   SUPPORTED EDGES
   20 CONTINUE
      SIM=SIN(M*PI*XC/SNODC(2,1,IS))*SIN(N*PI*YC/SNODC(3,2,IS))
      GOTO 1111
C****   TYPE #3. CIRCULAR SHAPE WITH FOURIER SERIES MODE DESCRIPTION
   30 GO TO 10
C*      TYPE #4. THIN,HOMOGENEOUS,CIRCULAR PANEL WITH FIXED
C*                                EDGES.
   40 CONTINUE
      N=N-1
      SKN=(WM(1,MWM)/SC(1,IS))**0.5
      A1=SKN*PI
      A2=SKN*PI/SNODC(2,1,IS)*XC
      SIM=SIN(N*YC)*(BJ(A2,N)+BJ(A1,N)/BI(A1,N)*BI(A2,N))
      GOTO 1111
C****  SURFACE TYPE #5. FRAME STIFFENED ORTHOTROPIC WHOLE SHELL
   50 CONTINUE
      SIM=SIN(M*PI*XC/SNODC(2,1,IS))*COS((N-1)*YC)
      GOTO 1111
C****  SURFACE TYPE #6. FRAME STIFFENED ORTHOTROPIC SHELL SEGMENT
   60 AL=ARCOS(SNODC(6,2,IS)/SNODC(3,2,IS))
      SIM=SIN(M*PI*XC/SNODC(2,1,IS))*SIN(N*PI*YC/AL)
      GOTO 1111
C****  SURFACE TYPE #7. BBN STYLE FE DATA MATCH
   70 R=SC(2,IS)
      XA=XC-(SNODC(2,1,IS)-BPQ(1,8,MWM)-BPQ(1,6,MWM))
      IF(R.LT.0.)YA=YC-(SNODC(3,2,IS)-BPQ(1,9,MWM)-BPQ(1,7,MWM))
      IF(R.GT.0.)YA=(R*ARCOS(SNODC(3,2,IS)/R)+BPQ(1,9,MWM)+
     &  BPQ(1,7,MWM))-R*ARCOS(YC/R)
      SIM=SIN(M*PI*XA/BPQ(1,6,MWM))*SIN(N*PI*YA/BPQ(1,7,MWM))
      IF(XA.LT.0.0.OR.XA.GT.BPQ(1,6,MWM))SIM=0.0
      IF(YA.LT.0.0.OR.YA.GT.BPQ(1,7,MWM))SIM=0.0
      GOTO 1111
C****     TYPE #8.ORTHOTROPIC RETANGULAR PANEL WITH CLAMPED EDGES
   80 CONTINUE
      AP=0.661
      AQ=0.661
      IF(M.EQ.1)AP=.630
      IF(N.EQ.1)AQ=.630
      XA=PI*(M+.5)*XC/SNODC(2,1,IS)
      YA=PI*(N+.5)*YC/SNODC(3,2,IS)
      SIM=AP*(COSH(XA)-COS(XA) - SINH(XA)+SIN(XA))*
     &  AQ*(COSH(YA)-COS(YA) - SINH(YA)+SIN(YA))
      GOTO 1111
C
C
C
 1111 RETURN
C*****************************************************************
      FUNCTION OIM(XC,YC,ISUR,MWM)
C*
C*
C*   OPENING MODE SHAPES
      M=WMO(2,MWM,ISUR)
```

```
      N=WMO(3,MWM,ISUR)
      OIM=0.0
C*
      GOTO(10,20,30),IOTYP(ISUR)
C****  OPENING ELEMENT TYPE #1.RETANGLE
   10  OIM=COS(M*PI*XC/ONODC(2,1,ISUR))*COS(N*PI*YC/ONODC(3,2,ISUR))
      GOTO 1111
C**** OPENING ELEMENT TYPE #2. CIRCLE
   20 B=WMO(1,MWM,ISUR)*XC
      OIM=COS(N*YC)*BJ(B,N)
      GOTO 1111
C****  OPENING ELEMENT TYPE #3. CONCENTRIC CIRCULAR ANNULOUS
   30 CONTINUE
      B=WMO(1,MWM,ISUR)*XC
      B1=WMO(1,MWM,ISUR)*ONODC(2,1,ISUR)
       E=BJP(B1,N)/BYP(B1,N)
      OIM=COS(N*YC)*(BJ(B,N)-E*BY(B,N))
      GOTO 1111
C****
C
C
 1111 RETURN
C*******************************************************************
      FUNCTION FN(XV,YV,ZV,NVOL,NWN)
C*
C*
C*  FN CALCULATES THE MULTIPLE CAVITY ACOUSTIC MODE SHAPES
C*
C*
      IF(NV.NE.1) GOTO 10
      FN=FNCAL(XV,YV,ZV,NVOL,NWN)
      GOTO 1111
   10  FN=0.0
      N=INDPN(NWN,NVOL)-1
      DO 50 I=1,NAMMC
      N=N+1
      FN=FN+FNCAL(XV,YV,ZV,NVOL,N)*PNMC(I)/AMN(N,NVOL)
   50  CONTINUE
 1111 RETURN
C**********************************************************************
      FUNCTION FNCAL(XV,YV,ZV,NVOL,NWN)
C*
C*
C*  FNCAL CALCULATES THE ACOUSTIC MODE SHAPES OF THE SUBVOLUMES OF
C*  THE MULTIPLE CAVITY SYSTEM. XV,YV,ZV, ARE ALWAYS IN THE ACOUSTIC
C*  COMPONENTS ORIENTATION COORDINATE SYSTEM (RETANGULAR). THE MODE
C*  SHAPES ARE ALL NORMALIZED SUCH THAT THE GENERALIZED MASS OF THE
C*  SUBVOLUME ACOUSTICS IS 1.0. BY THE NORMALIZATION FACTOR AMN(NAM,NV)
C*
C*
      M=INT(WN(2,NWN,NVOL))
      N=INT(WN(3,NWN,NVOL))
      IS=INT(WN(4,NWN,NVOL))
      GO TO (10,20,30,40),IVTYP(NVOL)
C**** VOLUME ELEMENT TYPE #1. RETANGULAR PARALLOPIPED
   10 CONTINUE
      FNCAL=(COS(M*PI*XV/VNODC(2,1,NVOL))*COS(N*PI*YV/VNODC(3,2,NVOL
```

```
     &))*COS(IS*PI*ZV/VNODC(4,3,NVOL)))
      GOTO 1111
C**** VOLUME ELEMENT TYPE #2. CIRCULAR CYLINDER
   20 CONTINUE
      BETA=(WN(1,NWN,NVOL)**2/CO**2-(IS*PI/VNODC(4,3,NVOL))**2)
      BETA=(ABS(BETA))**.5
      RR=(XV**2+YV**2)**.5
      I=(RR.GT.VNODC(2,1,NVOL))RR=VNODC(2,1,NVOL)
      SKN=BETA*RR
      TH=ARCOS(XV/RR)
      FNCAL=COS(IS*PI*ZV/VNODC(4,3,NVOL))*COS(N*TH)*BJ(SKN,N)
      GOTO 1111
C****  VOLUME ELEMENT #3. ANNULOUS OF CONCENTRIC CIRCULAR CYLINDERS
   30 CONTINUE
      BETA=(WN(1,NWN,NVOL)/CO**2-(IS*PI/VNODC(4,3,NVOL))**2)
      BETA=(ABS(BETA))**.5
      RR=(XV**2+YV**2)**.5
      IF(RR.GT.VNODC(2,1,NVOL))RR=VNODC(2,1,NVOL)
      SKN=BETA*RR
      TH=ARCOS(XV/RR)
      RKB=BETA*VNODC(3,2,NVOL)
      FNCAL=COS(IS*PI*ZV/VNODC(4,3,NVOL))*COS(N*TH)*
     & (BJ(SKN,N)-BJP(RKB,N)/BYP(RKB,N)*BY(SKN,N))
      IF(BETA.LT.ZERO)FNCAL=FNCAL*1.0
      GOTO 1111
C**** VOLUME ELEMENT TYPE #4. PERTURBED PARALLELEPIPED
   40 IF(ZV.GT.VNODC(4,3,NVOL))ZV=VNODC(4,3,NVOL)
      GOTO 10
C****
 1111 RETURN
C******************************************************************
      FUNCTION PFCF(XC,YC,XP,YP,WC,IS,IW)
C*
C*
C*  PFCF CALCULATES THE PRESSURE CORRELATION FUNCTION (FOR RANDOM
C*  FIELDS) AND THE SURFACE PRESSURE DISTRIBUTION (FOR DETERMINISTIC
C*  FIELDS). THE POINTS XC,YC,ZC,XP,YP,ZP ARE IN THE COORDINATE SYSTEM
C*  OF INTEGRATION.
C*
C*
      IW=IW
      GOTO(10,20,30),IPF(IS)
C****  PRESSURE FIELD TYPE #1. REVERBERANT PRESSURE FIELD
   10  RK=WC/CO
      PFCF=SIN(RK*(XC-XP))/(RK*(XC-XP))*SIN(RK*(YC-YP))/(RK*(YC-YP))
      GOTO 1111
C****  PRESSURE FIELD TYPE #2. AERODYNAMIC TURBULENCE
   20 RKX=EX(2,IS)*WC/CO
      RKY=EX(4,IS)*WC/CO
      PFCF=EXP(-1*EX(1,IS)*RKX*ABS(XC-XP))*COS(RKX*ABS(XC-XP))
     $*EXP(-1*EX(3,IS)*RKY*ABS(YC-YP))*COS(RKY*ABS(YC-YP))
      GOTO 1111
C**** PRESSURE FIELD TYPE #3. PLANE WAVE FIELD
   30 CONTINUE
      RK=WC/CO*COS(EX(1,IS))
      PFCF=COS(RK*(XC-XP))
      GOTO 1111
```

```
C****
 1111 RETURN
C***************************************************************************
      SUBROUTINE NORMA(DMNS,NVOL,NWN)
C*
C* CALCULATES THE NORMALIZATION FACTOR FOR THE ACOUSTIC MODE SHAPES
C*
      M=NINT(WN(2,NWN,NVOL))
      N=NINT(WN(3,NWN,NVOL))
      IS=NINT(WN(4,NWN,NVOL))
      GOTO(10,20,30),IVTYP(NVOL)
C**** VOLUME TYPE #1. RETANGULAR PARALLOPIPED
   10 EM=1.0
      EN=1.0
      ES=1.0
      IF(M.EQ.0)EM=2.0
      IF(N.EQ.0)EN=2.0
      IF(IS.EQ.0)ES=2.0
      DMNS=(EM*EN*ES/8.0)**.5
      GOTO 1111
C**** VOLUME TYPE #2. CIRCULAR CYLINDER
   20 EN=1.0
      ES=1.0
      IF(N.EQ.0)EN=2.0
      IF(IS.EQ.0)ES=2.0
      IF(N.EQ.0.AND.M.EQ.1)GOTO 25
      RKNM=(WN(1,NWN,NVOL)**2/CO**2-(IS*PI/VNODC(4,3,NVOL))**2)**0.5
      RKNM=RKNM*VNODC(2,1,NVOL)
      DMNS=((BJP(RKNM,N)**2+(1-N**2/RKNM**2)*BJ(RKNM,N)**2)*EN*ES/4.)
     &  **0.5
      GOTO 1111
   25 DMNS=(EN*ES/4.)**0.5
      GOTO 1111
C**** VOLUME TYPE #3. CONCENTRIC CIRCULAR CYLINDER ANNULOUS
   30 EN=1.0
      ES=1.0
      IF(N.EQ.0)EN=2.0
      IF(IS.EQ.0)ES=2.0
      RKNM=(WN(1,NWN,NVOL)**2/CO**2-(IS*PI/VNODC(4,3,NVOL))**2)**0.5
      RKA=RKNM*VNODC(4,2,NVOL)
      RKB=RKNM*VNODC(2,1,NVOL)
      DMNS=(ES*EN/4.0*((VNODC(2,1,NVOL)**2-N**2/RKNM**2)*
     & (BJ(RKB,N)-BJP(RKB,N)/BYP(RKB,N)*BY(RKB,N))**2-
     & (VNODC(4,2,NVOL)**2-N**2/RKNM**2)
     & *(BJ(RKA,N)-BJP(RKB,N)/BYP(RKB,N)*BY(RKA,N))**2))**0.5
      GOTO 1111
 1111 RETURN
C*************************************************************************
      SUBROUTINE NORMS(DMN,ISUR,MWM)
C*
C*  CALCULATES THE NORMALIZATION FACTOR FOR THE STRUCTURAL MODE SHAPE
C*
      M=INT(WM(2,MWM))
      N=INT(WM(3,MWM))
      GOTO(10,20,30,40,50,60,70,80),ISTYP(ISUR)
C**** SURFACE TYPE #1. RETANGULAR PANEL (SINE SERIES)
   10 DMN=1.0
```

```
      GOTO 1111
C**** SURFACE TYPE #2. RETANGULAR HOMOGENEOUS PANEL WITH SIMPLY
C     SUPPORTED EDGES
   20 CONTINUE
      DMN=(SC(6,ISUR)*SNODC(2,1,ISUR)*SNODC(3,2,ISUR)/4.)**.5
      GOTO 1111
C****   SURFACE TYPE #3. CIRCULAR PANEL (SINE SERIES)
   30 CONTINUE
      DMN=1.0
      GOTO 1111
C**** SURFACE TYPE #4. CIRCULAR PANEL WITH FIXED EDGES
   40 EN=1.0
      IF(N.EQ.0) EN=2.0
      RKA=  (WM(1,MWM)/SC(1,ISUR))**0.5*PI
      DMN=EM/2.0*(((BJP(RKA,N)**2+(1-N**2/RKA**2)*BJ(RKA,N)**2)
     & +2.*BJ(RKA,N)**2+(1-N**2/RKA**2)*BI(RKA,N)**2)
     & +(BJ(RKA,N)/BI(RKA,N))**2*(BIP(RKA,N)**2+(1-N**2/RKA**2)*
     & BI(RKA,N)**2))
      DMN=(DMN*SC(2,ISUR)*AREA(ISUR))**0.5
      GOTO 1111
C****  SURFACE TYPE #5. FRAME STIFFENED ORTHOTROPIC WHOLE SHELL
   50 N=N-1
      EM=1.0
      EN=1.0
      IF(M.EQ.0)EM=2.0
      IF(N.EQ.0)EN=2.0
      DMN=(EM*EN/4.*SC(2,ISUR)*AREA(ISUR))**.5
      GOTO 1111
C****  SURFACE TYPE #6. FRAME STIFFENED ORTHOTROPIC SHELL SEGMENT
   60 GOTO 50
C****  SURFACE TYPE #7.BBN FE DATA MODEL
   70 DMN=2.**0.5*BPQ(1,4,MWM)*BPQ(1,5,MWM)
      GOTO 1111
C****  SURFACE TYPE #8.RETANGULAR ORTHOTROPIC PANEL WITH FIXED PANELS
   80 CONTINUE
      VMS=SC(6,ISUR)*SNODC(2,1,ISUR)*SNODC(3,2,ISUR)
      IF(M.EQ.1)FX=.396
      IF(N.EQ.1)FY=.396
      IF(M.EQ.2)FX=.439
      IF(N.EQ.2)FY=.439
      IF(M.GE.3)FX=.437
      IF(N.GE.3)FY=.437
      DMN=(FX*FY*VMS)**0.5
 1111 RETURN
C*************************************************************************
      SUBROUTINE ALIGN(LTYP,ISUR,NVOL,IA,CF)
C*
C*
C*    ALIGN CALCULATES THE GEOMETRIC PARPMETERS NEEDED FOR THE
C* ALALYTIC SOLUTION OF LNM.  THE SUBROUTINE'S PARAMETER LIST MAY
C* BE USED AS REQUIRED TO PROVIDE THE APPROPRIATE INFORMATION TO
C* SOX,SOY,SOZ FOR NEW ADDITIONS TO THE LIBRARY.
C*
C*
      DIMENSION IA(3),CF(4,3)
      GOTO(10,20,30,40),LTYP
C****  ANALYTIC INTEGRATION: SURFACE TYPE #1/VOLUME TYPE #1 (LTYP=1)
```

```
   10 CF(4,1)=ONODC(2,1,ISUR)
      CF(4,2)=ONODC(3,2,ISUR)
      CALL PXFER(X1,Y1,Z1,1,ISUR,NVOL)
      CALL PXFER(X2,Y2,Z2,2,ISUR,NVOL)
      CALL PXFER(X3,Y3,Z3,3,ISUR,NVOL)
      XPX=X2-X1
      YPX=Y2-Y1
      ZPX=Z2-Z1
      XPY=X3-X1
      YPY=Y3-Y1
      ZPY=Z3-Z1
      IF(ABS(XPX).LT.ZERO) GO TO 11
      CF(1,1)=XPX/ABS(XPX)
      CF(2,1)=X1
      CF(3,1)=VNODC(2,1,NVOL)
      IA(1)=2
   11 IF(ABS(YPX).LT.ZERO) GO TO 12
      CF(1,1)=YPX/ABS(YPX)
      CF(2,1)=Y1
      CF(3,1)=VNODC(3,2,NVOL)
      IA(1)=3
   12 IF(ABS(ZPX).LT.ZERO) GO TO 13
      CF(1,1)=ZPX/ABS(ZPX)
      CF(2,1)=Z1
      CF(3,1)=VNODC(4,3,NVOL)
      IA(1)=4
   13 IF(ABS(XPY).LT.ZERO) GO TO 14
      CF(1,2)=XPY/ABS(XPY)
      CF(2,2)=X1
      CF(3,2)=VNODC(2,1,NVOL)
      IA(2)=2
   14 IF(ABS(YPY).LT.ZERO) GO TO 15
      CF(1,2)=YPY/ABS(YPY)
      CF(2,2)=Y1
      CF(3,2)=VNODC(3,2,NVOL)
      IA(2)=3
   15 IF(ABS(ZPY).LT.ZERO) GO TO 16
      CF(1,2)=ZPY/ABS(ZPY)
      CF(2,2)=Z1
      CF(3,2)=VNODC(4,3,NVOL)
      IA(2)=4
   16 IF(IA(1)+IA(2).NE.7) GO TO 17
      CF(1,3)=0.0
      CF(2,3)=X1
      CF(3,3)=VNODC(2,1,NVOL)
      IA(3)=2
   17 IF(IA(1)+IA(2).NE.6) GO TO 18
      CF(1,3)=0.0
      CF(2,3)=Y1
      CF(3,3)=VNODC(3,2,NVOL)
      IA(3)=3
   18 IF(IA(1)+IA(2).NE.5) GO TO 19
      CF(1,3)=0.0
      CF(2,3)=Z1
      CF(3,3)=VNODC(4,3,NVOL)
      IA(3)=4
   19 CONTINUE
```

```
      GOTO 1111
C**** OPENING/VOLUME COMBINATIONS 2,3,4 REQUIRE THE SAME ALIGNMENT
   20 CONTINUE
   30 CONTINUE
   40 CONTINUE
      CALL PXFER(X1,Y1,Z1,1,ISUR,NVOL)
      CF(1,1)=Z1
      CF(1,2)=VNODC(4,3,NVOL)
      GOTO 1111
 1111 RETURN
C***************************************************************
      SUBROUTINE PXFER(XN,YN,ZN,N,ISUR,NVOL)
C*
C*
C*    PXFER CALCULATES THE LOCATION OF THE N.TH SURFACE NODE OF ISUR
C*    IN THE COORDINATE SYSTEM OF SUBVOLUME NVOL.
C*
C*
      XC=ONODC(N,1,ISUR)
      YC=ONODC(N,2,ISUR)
      ZC=ONODC(N,3,ISUR)
      X=OTM(1,1,ISUR)*XC+OTM(1,2,ISUR)*YC+OTM(1,3,ISUR)*ZC+OORG(1,ISUR)
      Y=OTM(2,1,ISUR)*XC+OTM(2,2,ISUR)*YC+OTM(2,3,ISUR)*ZC+OORG(2,ISUR)
      Z=OTM(3,1,ISUR)*XC+OTM(3,2,ISUR)*YC+OTM(3,3,ISUR)*ZC+OORG(3,ISUR)
      X=X-VORG(1,NVOL)
      Y=Y-VORG(2,NVOL)
      Z=Z-VORG(3,NVOL)
      XN=VTM(1,1,NVOL)*X+VTM(1,2,NVOL)*Y+VTM(1,3,NVOL)*Z
      YN=VTM(2,1,NVOL)*X+VTM(2,2,NVOL)*Y+VTM(2,3,NVOL)*Z
      ZN=VTM(3,1,NVOL)*X+VTM(3,2,NVOL)*Y+VTM(3,3,NVOL)*Z
      RETURN
C********************************************************************
      FUNCTION SOX(LTYP,ISUR,NVOL,IA,CF,NWN,MWM)
C*
C*
C*  SOX ANALYTICALLY CALCULATES THE X-COMPONENT OF LNM FOR COMPONENT
C*  MODE SYNTHESIS (IN MULCV).  LNM IS ALWAYS CALCULATED OVER THE
C*  ENTIRE OPENING.
C*
C*
C* ISUR: OPENING NUMBER
C* NVOL: VOLUME NUMBER
C* LTYP: OPENING/VOLUME INTEGRATION TYPE
C*
C* IA: ARRAY OF INTEGER CONSTANTS
C* CF: ARRAY OF REAL CONSTANTS FOR ANALYTIC INTEGRATION
C*
      DIMENSION IA(3),CF(4,3)
      ISUR=ISUR
      GOTO(10,20,30,40),LTYP
C**** TYPE #1. RETANGLE/RETANGULAR PARALLOPIPED
   10 A=CF(2,1)
      A1=CF(3,1)
      XL=CF(4,1)
       I=WN(IA(1),NWN,NVOL)
      IP=WMO(2,MWM,ISUR)
      IF(ABS(XL-A1).GT.ZERO) GOTO 17
```

```
      IF(I+IP.EQ.0)GOTO 11
      IF(I-IP.NE.0) GOTO 15
      IF(I-IP.EC.0) GOTO 16
   11 SOX=XL
      GOTO 1111
   15 SOX=0.0
      GOTO 1111
   16 SOX=0.5*XL
      GOTO 1111
   17 YCM1=A1-XL
      T1=PI*XL/A1
      TT1=PI*A/A1
      VMMYM=IP/XL
      VNYYC=I/A1
      IF(I+IP.EQ.0) GOTO 12
      VM2=VNYYC-VMMYM
      IF(ABS(VM2).LT.ZERO)VM2=0.0
      IF(A.EQ.0..AND.VM2.EQ.0.) GOTO 13
      BETA=I*TT1
      IF(A.NE.0.C.AND.VM2.EQ.0.)GOTO 18
      VM1=VNYYC+VMMYM
      V1=1/PI/VM1
      V2=1/PI/VM2
      ALPHA=I*T1
      IF(A.EQ.0..AND.VM2.NE.0.)GOTO 14
      GAMA=ALPHA+BETA
      IF(A.NE.0..AND.VM2.NE.0.) GOTO 19
   12 SOX=XL
      GOTO 1111
   13 SOX=0.5*XL
      GOTO 1111
   18 SOX=0.5*XL*COS(BETA)
      GOTO 1111
   14 SOX=0.5*(SIN(ALPHA)*(V1+V2))*(-1)**(IP+2)
      GOTO 1111
   19 SOX=0.5*(SIN(GAMA)*(-1)**(IP+2)-SIN(BETA))*(V1+V2)
      GOTO 1111
C****  TYPE #2. CIRCLE/CIRCULAR CYLINDER
   20 SOX=0.0
      I=WN(3,NWN,NVOL)
      IP=WMO(3,MWM,ISUR)
      IF(IABS(I-IP).GT.0) GOTO 1111
      RO=WMO(1,MWM,ISUR)
      RA=(WN(1,NWN,NVOL)**2/CO**2-(WN(4,NWN,NVOL)*PI
     &  /VNODC(4,3,NVOL))**2)
      RA=(ABS(RA))**0.5
      S=0.0
      E=ONODC(2,1,ISUR)
      SOX=BES(I,1.0,C.0,1.0,0.0,RO,RA,S,E)
      GOTO 1111
C****  TYPE #3. ANNULOUS OF CONCENTRIC CIRCLES/CIRCULAR CYLINDER
   30 SOX=0.0
      I=WN(3,NWN,NVOL)
      IP=WMO(3,MWM,ISUR)
      IF(IABS(I-IP).GT.0) GOTO 1111
      RO=WMO(1,MWM,ISUR)
      RA=(WN(1,NWN,NVOL)**2/CO**2-(WN(4,NWN,NVOL)*PI
```

```
     &  /VNODC(4,3,NVOL))**2)
      RA=ABS(RA)**0.5
      S=ONODC(3,2,ISUR)
      E=ONODC(2,1,ISUR)
      SOX=BES(I,1.0,0.0,1.0,0.0,RO,RA,S,E)-BJP(E*RO,I)/BYP(E*RO,I)
     &  *BES(I,0.,1.,1.,0.,RO,RA,S,E)
      GOTO 1111
C**** TYPE #4.ANNULOUS OF CONCENTRIC CIRCLES/ANNULOUS OF CONCENTRIC
C*            CYLINDERS
   40 SOX=0.0
      I=WN(3,NWN,NVOL)
      IP=WMO(3,MWM,ISUR)
      IF(IABS(I-IP).GT.0) GOTO 1111
      RO=WMO(1,MWM,ISUR)
      RA=(WN(1,NWN,NVOL)**2/CO**2-(WN(4,NWN,NVOL)*PI
     &  /VNODC(4,3,NVOL))**2)
      RA=ABS(RA)**0.5
      S=ONODC(3,2,ISUR)
      E=ONODC(2,1,ISUR)
      C1=BJP(RO*E,I)/BYP(RO*E,I)
      C2=BJP(RA*VNODC(2,1,ISUR),I)/BYP(RA*VNODC(2,1,ISUR),I)
      SOX=BES(I,1.0,0.,1.0,0.,RO,RA,S,E)-C1*BES(I,0.,1.,1.,0.,RO,
     & RA,S,E)-C2*BES(I,1.0,0.0,0.0,1.0,RO,RA,S,E)+C1*C2*
     & BES(I,1.,0.,0.,1.,RO,RA,S,E)
      GOTO 1111
 1111  RETURN
C******************************************************************
      FUNCTION SOY(LTYP,ISUR,NVOL,IA,CF,NWN,MWM)
C*
C*
C*  SOY ANALYTICALLY CALCULATES THE Y-COMPONENT OF LNM FOR COMPONENT
C*  MODE SYNTHESIS (IN MULCV).  LNM IS ALWAYS CALCULATED OVER THE
C*  ENTIRE OPENING.
C*
C*
C* ISUR: OPENING NUMBER
C* NVOL: VOLUME NUMBER
C* LTYP: OPENING/VOLUME INTEGRATION TYPE
C* IA: ARRAY OF INTEGER CONSTANTS
C* CF: ARRAY OF REAL CONSTANTS FOR ANALYTIC INTEGRATION
C*
      DIMENSION IA(3),CF(4,3)
      ISUR=ISUR
C*
      GOTO(10,20,30,40),LTYP
C**** TYPE #1. RETANGLE/RETANGULAR PARALLOPJPED
   10 CONTINUE
       I=WN(IA(2),NWN,NVOL)
      JP=WMO(3,MWM,ISUR)
      A=CF(2,2)
      A1=CF(3,2)
      YL=CF(4,2)
      IF(ABS(YL-A1).GT.ZERO) GOTO 17
      IF(I+JP.EQ.0)GOTO 11
      IF(I-JP.NE.0) GOTO 15
      IF(I-JP.EQ.0) GOTO 16
   11 SOY=YL
```

```
      GOTO 1111
   15 SOY=0.0
      GOTO 1111
   16 SOY=0.5*YL
      GOTO 1111
   17 YCM1=A1-YL
      T1=PI*YL/A1
      TT1=PI*A/A1
      VMMYM=JP/YL
      VNYYC=I/A1
      IF(I+JP.EQ.0) GOTO 12
      VM2=VNYYC-VMMYM
      IF(ABS(VM2).LT.ZERO)VM2=0.0
      IF(A.EQ.0..AND.VM2.EQ.0.) GOTO 13
      BETA=I*TT1
      IF(A.NE.0.0.AND.VM2.EQ.0.)GOTO 18
      VM1=VNYYC+VMMYM
      V1=1/PI/VM1
      V2=1/PI/VM2
      ALPHA=I*T1
      IF(A.EQ.0..AND.VM2.NE.0.)GOTO 14
      GAMA=ALPHA+BETA
      IF(A.NE.0..AND.VM2.NE.0.) GOTO 19
   12 SOY=YL
      GOTO 1111
   13 SOY=0.5*YL
      GOTO 1111
   18 SOY=0.5*YL*COS(BETA)
      GOTO 1111
   14 SOY=0.5*(SIN(ALPHA)*(V1+V2))*(-1)**(JP+2)
      GOTO 1111
   19 SOY=0.5*(SIN(GAMA)*(-1)**(JP+2)-SIN(BETA))*(V1+V2)
      GOTO 1111
C***  OPENING/VOLUME TYPES 2,3,4 HAVE SAVE THATA RESULTS
   20 CONTINUE
   30 CONTINUE
   40 CONTINUE
      I=WN(3,NWN,NVOL)
      JP=WMO(3,MWM,ISUR)
      IF(I.EQ.JP.AND.JP.NE.0)SOY=PI
      IF(IABS(I-JP).GT.0)SOY=0.0
      IF(I.EQ.JP.AND.JP.EQ.0)SOY=PI*2.
      GOTO 1111
 1111  RETURN
C*************************************************************
      FUNCTION SOZ(LTYP,ISUR,NVOL,IA,CF,NWN,MWM)
C*  SOZ ANALYTICALLY CALCULATES THE Z-COMPONENT OF LNM FOR COMPONENT
C*  MODE SYNTHESIS (IN MULCV).  LNM IS ALWAYS CALCULATED OVER THE
C*  ENTIRE OPENING.
C*
C*
C* ISUR: OPENING NUMBER
C* NVOL: VOLUME NUMBER
C* LTYP: OPENING/VOLUME INTEGRATION TYPE
C* IA: ARRAY OF INTEGER CONSTANTS
C* CF: ARRAY OF REAL CONSTANTS FOR ANALYTIC INTEGRATION
C*
```

```
      DIMENSION IA(3),CF(4,3)
C*
      GOTO(10,20,30,40),LTYP
C**** TYPE #1. RETANGLE/RETANGULAR PARALLOPJPED
   10 CONTINUE
      K=WN(IA(3),NWN,NVOL)
      SOZ=ISUR*MWM
      SOZ=COS(K*PI*(-CF(2,3)/CF(3,3)))
      GOTO 1111
C**** OPENING/VOLUME TYPE 2,3,4 COMBINATIONS ALL REQUIRE SAME SOZ
   20 CONTINUE
   30 CONTINUE
   40 CONTINUE
      K=WN(4,NWN,NVOL)
      SOZ=COS(K*PI*CF(1,1)/CF(1,2))
      GOTO 1111
 1111 RETURN
C*******************************************************************
      FUNCTION BES(J,A,B,C,D,AL,BT,S,F)
      DIMENSION U(8)
C*
C*  INTEGRATION OF (A*BJ(AL*X,J)+B*BY(AL*X,J))*(C*BJ(BT*X,J)+
C*    D*BY(BT*X,J))*X  OVER X FROM S TO F
C*
      BES=0.0
      ALX=AL*F
      BTX=BT*F
      DO 1 I=1,8
    1 U(I)=0.0
      IF(A.EQ.0.0) GOTO 10
      U(1)=BJ(ALX,J)
      U(2)=BJP(ALX,J)
   10 IF(B.EQ.0.0) GOTO 11
      U(3)=BY(ALX,J)
      U(4)=BYP(ALX,J)
   11 IF(AL.EQ.BT)GOTO 13
      IF(C.EQ.0.0) GOTO 12
      U(5)=BJ(BTX,J)
      U(6)=BJP(BTX,J)
   12 IF(D.EQ.0.0) GOTO 13
      U(7)=BY(BTX,J)
      U(8)=BYP(BTX,J)
   13 CONTINUE
      IF(BT.EQ.AL)BESU=F**2/2*((U(2)+U(4))**2+(1-J**2/ALX**2)*
     &  (U(1)+U(3))**2)
      IF(BT.NE.AL)BESU=F/(BT**2-AL**2)*((AL*(U(5)+U(7))*(U(2)+U(4)))
     &  -(BT*(U(1)+U(3))*(U(6)+U(8))))
      IF(S.EQ.0.0) GOTO 20
      ALX=AL*S
      BTX=BT*S
      IF(A.EQ.0.0) GOTO 14
      U(1)=BJ(ALX,J)
      U(2)=BJP(ALX,J)
   14 IF(B.EQ.0.0) GOTO 15
      U(3)=BY(ALX,J)
      U(4)=BYP(ALX,J)
   15 IF(AL.EQ.BT) GOTO 17
```

ORIGINAL PAGE IS
OF POOR QUALITY

```
      IF(C.EQ.0.0) GOTO 16
      U(5)=BJ(BTX,J)
      U(6)=BJP(BTX,J)
   16 IF(D.EQ.0.0) GOTO 17
      U(7)=BY(BTX,J)
      U(8)=BYP(BTX,J)
   17 CONTINUE
      IF(BT.EQ.AL)BES=S**2/2*((U(2)+U(4))**2+(1-J**2/ALX**2)*
     &  (U(1)+U(3))**2)
      IF(AL.NE.BT)BES=S/(BT**2-AL**2)*((AL*(U(5)+U(7))*(U(2)+U(4)))
     &  -(BT*(U(1)+U(3))*(U(6)+U(8))))
   20 BES=BESU-BES
      RETURN
C*
C*********************************************************************
      SUBROUTINE ANJAFS(IS)
C*
C*
C*  ANALYTIC CALCULATION OF JOINT ACCEPTANCE IN FORM REQUIRED BY
C*  THE EXTERNAL PRESSURE FIELD TYPE. MODE SHAPE DESCRIPTION IS GIVEN
C*  BY FOURIER SERIES.
C*
C*
      IR=NSTOR(IS)
      READ(L12'IR)BPQ
      DO 200 MWM=1,NM(IS)
      DO 100 NOB=LBAND,MBAND
      RJA(NOB)=0.0
      IF(CENTF(NOB)-WM(1,MWM).GT.BNDWM(NOB,1))GOTO 100
      IF(WM(1,MWM)-CENTF(NOB).GT.BNDWM(NOB,2))GOTO 100
      GOTO(10,20,30),IPF(IS)
C**** PRESSURE FIELD TYPE #1. REVERBERANT
   10 BX=SNODC(2,1,IS)*CENTF(NOB)/PI/CO
      BY=SNODC(3,2,IS)*CENTF(NOB)/PI/CO
      DO 13 M=1,MX
      DO 12 MP=1,MX
      CALL RVBJA(VJP,BX,M,MP,PI)
      IF(VJP.EQ.0.0)GO TO 12
      DO 11 N=1,NX
      DO 11 NP=1,NX
      CALL RVBJA(VJQ,BY,N,NP,PI)
      VI=VI+VJP*VJQ*BPQ(M,N,MWM)*BPQ(MP,NP,MWM)
   11 CONTINUE
   12 CONTINUE
   13 CONTINUE
      GOTO 90
C**** PRESSURE FIELD TYPE #2. AERODYNAMIC TURBULENCE
   20 AX=EX(1,IS)
      AY=EX(3,IS)
      BX=SNODC(2,1,IS)*CENTF(NOB)/PI/CO*EX(2,IS)
      BY=SNODC(3,2,IS)*CENTF(NOB)/PI/CO*EX(4,IS)
      DO 23 M=1,MX
      DO 22 MP=1,MX
      CALL ATJA(VJP,AX,BX,M,MP,PI)
      IF(VJP.EQ.0.0) GOTO 22
      DO 21 N=1,NX
      DO 21 NP=1,NX
```

```
      CALL ATJA(VJQ,AY,BY,N,NP,PI)
      VI=VI+VJP* VJQ*BPQ(M,N,MWM)*BPQ(MP,NP,MWM)
   21 CONTINUE
   22 CONTINUE
   23 CONTINUE
      GOTO 90
C****  PRESSURE FIELD TYPE #3. PLANE WAVE FIELD
   30 BX=SNODC(2,1,IS)*CENTF(NOB)/PI/CO*COS(EX(1,IS))
      BY=SNODC(3,2,IS)*CENTF(NOB)/PI/CO*COS(EX(1,IS))
      DO 33 M=1,MX
      DO 32 MP=1,MX
      CALL PWJA(VJP,BX,M,MP,PI)
      IF(VJP.EQ.0.0)GOTO 32
      DO 31 N=1,NX
      DO 31 NP=1,NX
      CALL PWJA(VJQ,BY,N,NP,PI)
      VI=VI+VJP*VJQ*BPQ(M,N,MWM)*BPQ(MP,NP,MWM)
   31 CONTINUE
   32 CONTINUE
   33 CONTINUE
      GOTO 90
C****
   90 RJA(NOB)=VI/AMN(MWM,1)**2
  100 CONTINUE
      IR=(NSTOR(IS)-1)*NSMT+MWM
      WRITE(L10'IR)RJA
  200 CONTINUE
 1111 RETURN
C***************************************************************
      SUBROUTINE ANJASS(IS)
C*
C*  ANALYTIC CALCULATION OF JA FOR A SIMPLE SIN*SIN MODE SHAPE
C*    (SURFACE TYPE #2 AND TYPE #7 AND TYPE #8)
      IR=NSTOR(IS)
      IF(ISTYP(IS).EQ.7)READ(L12'IR)BPQ
      DO 200 MWM=1,NM(IS)
      M=NINT(WM(2,MWM))
      MP=M
      N=NINT(WM(3,MWM))
      NP=N
      DO 100 NOB=LBAND,MBAND
      BX=SNODC(2,1,IS)*CENTF(NOB)/PI/CO
      BY=SNODC(3,2,IS)*CENTF(NOB)/PI/CO
      IF(ISTYP(IS).NE.7)GOTO 5
      BX=BPQ(1,6,MWM)*CENTF(NOB)/PI/CO
      BY=BPQ(1,7,MWM)*CENTF(NOB)/PI/CO
    5 CONTINUE
      RJA(NOB)=0.0
      GOTO (10,20,30),IPF(IS)
C****  PRESSURE FIELD TYPE #1. REVERBERANT
   10 CALL RVBJA(VJP,BX,M,MP,PI)
      CALL RVBJA(VJQ,BY,N,NP,PI)
      GOTO 90
C****  PRESSURE FIELD TYPE #2. AERODYNAMIC TURBULENCE
   20 AX=EX(1,IS)
      AY=EX(3,IS)
      CALL ATJA(VJP,AX,BX,M,MP,PI)
```

```
      CALL ATJA(VJQ,AY,BY,N,NP,PI)
      GOTO 90
C****  PRESSURE FIELD TYPE #3. PLANE WAVE
   30 BX=BX*COS(EX(1,IS))
      BY=BY*COS(EX(1,IS))
      CALL PWJA(VJP,BX,M,MP,PI)
      CALL PWJA(VJQ,BY,N,NP,PI)
      GOTO 90
C******
   90 RJA(NOB)=VJP*VJQ/AMN(MWM,1)**2
      IF(ISTYP(IS).EQ.7)RJA(NOB)=RJA(NOB)*(BPQ(1,6,MWM)*BPQ(1,7,MWM))
     & **2/AREA(IS)**2
  100 CONTINUE
      IR=(NSTOR(IS)-1)*NSMT+MWM
      WRITE(L10'IR)RJA
  200 CONTINUE
      RETURN
C*********************************************************************
      SUBROUTINE PFCAL(IS)
C*
C*   CALCULATE THE JOINT ACCEPTANCE OF A POINT FORCE EXCITATION
      DO 200 MWM=1,NM(IS)
      RJA(1)=(SIM(EX(1,IS),EX(2,IS),IS,MWM))**2/AMN(MWM,1)**2/
     &  AREA(IS)**2
      DO 100 NOB=LBAND,MBAND
  100 RJA(NOB)=RJA(1)
      IR=(NSTOR(IS)-1)*NSMT+MWM
      WRITE(L10'IR)RJA
  200 CONTINUE
      RETURN
C****************************************************************************
      SUBROUTINE RVBJA(VJP,B,J,K,PI)
C*
C*
C*    SPECIAL ROUTINE FOR ANALYTIC CALCULATION OF REVERBERANT
C*    FIELD JOINT ACCEPTANCE WITH SIN*SIN MODE SHAPE
C*
C*
      DOUBLE PRECISION E,F,G,H,DPI
      DPI=3.141592650D0
      VJP=0.0
      IF((-1)**(J+K).LT.0)GOTO 1111
      E=DPI*DBLE((B+J))
      F=DPI*DBLE((B-J))
      G=DPI*DBLE((B+K))
      H=DPI*DBLE((B-K))
      IF(J.EQ.K) GO TO 200
      T1=1.0/(PI**2*B*(K**2-J**2))
      VJP=T1*(K*(CIN(E)-CIN(F))-J*(CIN(G)-CIN(H)))
      GOTO 1111
C 200 VJP=(1./(2.*J*PI**2*B))*(CIN(E)-CIN(F))+(1./2./PI/B)*(SI(E)+SI(F))
  200 CONTINUE
      T1A=(1./(2.*J*PI**2*B))
      T1B=(CIN(E)-CIN(F))
      T1=T1A*T1B
      T2=(1./2./PI/B)*(SI(E)+SI(F))
       T3= (1./PI**2/(J**2-B**2))*(1.-(-1)**J*COS(PI*B))
```

```
      VJP=T1+T2+T3
 1111 RETURN
      FUNCTION SI(X)
      DOUBLE PRECISION X,A,A1,FC,PR
      A=0.0D0
      FC=1.D0
      DO 10 N=0,40
      PR=DFLOAT(2*N+1)
      FC=FC*DFLOAT((2*N)*(2*N+1))
      IF(FC.EQ.0.0D0)FC=1.0D0
      A1=DFLOAT((-1)**N)*X**PR/PR/FC
      A=A+A1
      IF(ABS(A1).LE.1.0D-5 )  GO TO 20
   10 CONTINUE
   20 CONTINUE
      SI=REAL(A)
      RETURN
      FUNCTION CIN(X)
      DOUBLE PRECISION X,A,A1,FC,PR
      A=0.0D0
      FC=1.D0
      DO 10 N=1,40
      PR=DFLOAT(2*N)
      FC=FC* DFLOAT((2*N-1)*(2*N))
      A1=DFLOAT((-1)*(-1)**N)*X**PR/PR/FC
      A=A+A1
      IF(ABS(A1).LE.1.0D-5) GOTO 20
   10 CONTINUE
   20 CONTINUE
      CIN=REAL(A)
      RETURN
C*******************************************************************
      SUBROUTINE PWJA(VJP,B,J,K,PI)
C*
C*  ANALYTIC CALCULATION OF SIN*SIN MODE SHAPE AND PROGRESSIVE
C*   WAVE ACOUSTIC FIELD JOINT ACCEPTANCE
      VJP=0.0
      IF((-1)**(J+K).LT.0) GOTO 1111
      VJP=2.*J*K/PI**2/(J**2-B**2)/(K**2-B**2)*(1-(-1)**J*COS(PI*B))
 1111 RETURN
C************************************************************************
      SUBROUTINE ATJA(VJP,AL,B,J,K,PI)
C* SPECIAL ROUTINE FOR THE ANALYTIC CALCULATION OF PROGRESSIVE
C* WAVE FIELD JOINT ACCEPTANCE WITH SIN*SIN MODE SHAPE
C*
      B1=(2./(J**2+K**2))**0.5*B
      BJ1=B/J
      DJ=((AL**2+1)*BJ1**2+1)**2-4*BJ1**2
      IF(J.EQ.K) GO TO 10
      BK=B/K
      DK=((AL**2+1)*BK**2+1)**2-4*BK**2
      AJK=(J**2+K**2)**2/(2.*PI**2*J**3*K**3*DJ*DK)*(((AL**2-1)*B1**2+1)
     &**2-4*(AL*B1**2)**2-(FLOAT((K**2-J**2))/(K**2+J**2))**2)
      BJK=2.*(J**2+K**2)**2/(PI**2*J**3*K**3*DJ*DK)*AL*B1**2*((AL**2-1)
     &*B1**2+1)
      VJP=AJK*(1-(-1)**J*EXP(-PI*AL*B)*COS(PI*B))+BJK*((-1)**J*EXP(-PI*
     &AL*B)*SIN(PI*B))
```

```
      GOTO 1111
   10 AJ=2./((J*PI)**2*DJ**2)*(((AL**2-1)*BJ1**2+1)**2-4*(AL*BJ1**2)**2)
      EJ=8./(J*PI)**2/DJ**2*AL*BJ1**2*((AL**2-1)*BJ1**2+1)
      CJ=1./(J*PI)/DJ*AL*BJ1*((AL**2+1)*BJ1**2+1)
      VJP=AJ*(1-(-1)**J*EXP(-PI*AL*B)*COS(PI*B))+EJ*(-1)**J*EXP(-PI*AL*B
     1)*SIN(PI*B)+CJ
 1111 RETURN
C************************************************************
C************************************************************
      FUNCTION BJ(X,N)
C     COMPUTES THE J BESSEL FUNCTION OF THE FIRST KIND FOR A
C        GIVEN ARGUMENT X, AND A GIVEN ORDER N.
C     X=ARGUMENT OF THE J BESSEL FUNCTION
C     N=THE ORDER OF THE J BESSEL FUNCTION
C     D=REQUIRED ACCURACY
C     BJ=THE RESULTANT BESSEL FUNCTION
      DOUBLE PRECISION XD,Z,ZZ,VAR,VAL,SUM,TOTAL,BLJ
      DEFINE BSLJ(TOTP,TOTQ,ARG)=SQRT(2./(PI*X))*
     &  (TOTP*SIN(ARG)+TOTQ*COS(ARG))
      XD=DBLE(X)
      IF(X.GT.10.)GOTO 250
      IF(N.GT.55) GOTO 300
      IF(X.EQ.0.) GOTO 30
      M=57-N
      Z=1.0D0
      ZZ=XD*XD
      SUM=0.0D0
      TOTAL=0.0D0
      BJ1=1.0D0
      DO 10 I=1,M
      K=I-1
      VAR=2.D0**(2*K+N)
      TOTAL=SUM+BJ1*Z/FAC(I)/FAC(I+N)/VAR
      IF(TOTAL.EQ.0.D0)GOTO 5
      VAL=SUM/TOTAL
      IF(VAL.GT.DN.AND.VAL.LT.UP) GOTO 20
    5 BJ1=-BJ1
      Z=Z*ZZ
      SUM=TOTAL
   10 CONTINUE
   20 BLJ=XD**N*TOTAL
      BJ=REAL(BLJ)
      RETURN
   30 IF(N.GT.0) GOTO 40
      BJ=1.0
      RETURN
   40 BJ=0.0
      RETURN
C****  USE ASYMTOTIC SERIES SOLUTION
  250 IF(N.GT.8) GOTO 275
      CALL PSQS(N,X,TOTP,TOTQ,ARG)
      BJ=BSLJ(TOTP,TOTQ,ARG)
      RETURN
C****  USE ASYMTOTIC SERIES THE RECURSION WHEN N>8
  275 CALL PSQS(8,X,TOTP,TOTQ,ARG)
      BLJN=BSLJ(TOTP,TOTQ,ARG)
      CALL PSQS(7,X,TOTP,TOTQ,ARG)
```

```
      BLJNM1=BSLJ(TOTP,TOTQ,ARG)
      CALL RECUR(N,X,BLJN,BLJNM1,BJ)
      RETURN
  300 BJ=0.0
      RETURN
C***************************************************************
C***************************************************************
      FUNCTION BY(X,N)
C*
C*  CALCULATES THE NEUMANN FUNCTION
C*
      DOUBLE PRECISION XD,TOTAL,CUM,SUM,Z,ZZ,DIV,VAL,BLY,BLJ
      DEFINE BSLY(TOTP,TOTQ,ARG)=SQRT(2./(PI*X))*
     &  (TOTP*SIN(ARG)+TOTQ*COS(ARG))
      XD=DBLE(X)
      IF(X.GT.10.)GOTO 250
      IF(N.GT.55) GOTO 300
C***   CALCULATE BY SERIES DEFINITION
      IF(X.EQ.0.)GOTO 50
      TOTAL=0.D0
      CUM=0.D0
      SUM=0.D0
      Z=XD*XD/4.D0
      IF(N.EQ.0) GOTO 15
      ZZ=1.D0
      DO 10 I=1,N
      DIV=FAC(N-I+1)/FAC(I)
      CUM=CUM+DIV*ZZ
      ZZ=ZZ*Z
   10 CONTINUE
   15 ZZ=1.D0
      BY1=1.D0
      M=57-N
      DO 30 I=1,M
      DIV=ZZ/FAC(I)
      TOTAL=SUM+(PSI(I)+PSI(I+N))*BY1*DIV/FAC(I+N)
      VAL=SUM/TOTAL
      IF(VAL.GT.DN.AND.VAL.LT.UP) GOTO 40
   20 BY1=-BY1
      ZZ=ZZ*Z
      SUM=TOTAL
   30 CONTINUE
   40 DIV=((2.D0/XD)**N)/DPI
      BLJ=DBLE(BJ(X,N))
      BLY=(-DIV)*CUM+(2.D0/DPI)*DLOG(XD/2.D0)*BLJ-(((XD/2.D0)**N)/PI)
     & * TOTAL
      BY=REAL(BLY)
      RETURN
   50 BY=-1.0E35
      RETURN
   60 BY=1.0E35
      RETURN
C****  USE ASYMTOTIC SERIES SOLUTION
  250 IF(N.GT.8) GOTO 275
      CALL PSQS(N,X,TOTP,TOTQ,ARG)
      BY=BSLY(TOTP,TOTQ,ARG)
      RETURN
```

```
C****  USE ASYMTOTIC SERIES THEN RECURSION FOR N>8
  275 CALL PSQS(8,X,TOTP,TOTQ,ARG)
      BLYN=BSLY(TOTP,TOTQ,ARG)
      CALL PSQS(7,X,TOTP,TOTQ,ARG)
      BLYN1=BSLY(TOTP,TOTQ,ARG)
      CALL RECUP(N,X,BLYN,BLYNM1,BY)
      RETURN
  300 BY=-1.35
      RETURN
C*****************************************************************
      SUBROUTINE PSQS(N,X,TOTP,TOTQ,ARG)
      DOUBLE PRECISION ATEX,BJ1,TRMP,TRMQ,SUMP,SUMQ,RJ,RK,U,VAL,TP,TQ,XD
      XD=DBLE(X)
      U=4.D0*N*N
      ATEX=8.D0*X
      BJ1=-1.D0
      TRMP=1.D0
      SUMP=1.0D0
      SUMQ=0.D0
      RJ=1.D0
      DO 10 M=2,56,2
      RK=RJ+2.D0
      TRMQ=TRMP*(U-RJ*RJ)/ATEX
      TRMP=TRMQ*(U-RK*RK)/ATEX
      TP=SUMP+BJ1*TRMP/FAC(M+1)
      BJ1=-BJ1
      TQ=SUMQ+BJ1*TRMQ/FAC(M)
      IF(TQ.EQ.0.D0)GOTO 5
      VAL=SUMQ/TQ
      IF(VAL.GT.DN.AND.VAL.LT.UP) GOTO 20
    5 SUMQ=TQ
      SUMP=TP
      RJ=RK+2.D0
   10 CONTINUE
   20 ARG=REAL(X-DPI*(N/2.D0+0.25D0))
      TOTP=REAL(TP)
      TOTQ=REAL(TQ)
      RETURN
C*****************************************************************
      SUBROUTINE RECUR(N,X,BSLN,BSLNM1,BSL)
      QTNT=2./X
      K=N-1
      DO 10 I=8,K
      BSLNP1=QTNT*I*BSLN-BSLNM1
      BSLNM1=BSLN
      BSLN=BSLNP1
   10 CONTINUE
      BSL=BSLN
      RETURN
C*****************************************************************
      FUNCTION BI(X,N)
C     COMPUTES THE I BESSEL FUNCTION(MODIFIED) FOR A GIVEN ARGUMENT
C        AND ORDER.
C     X=ARGUMENT OF THE I BESSEL FUNCTION
C     N=ORDER OF THE I BESSEL FUNCTION
C     BI=RESULTANT
C     IER=RESULTANT ERROR CODE
```

```
C            IER=0  NO ERROR
C            IER=1  N IS NEGATIVE
C            IER=2  X IS NEGATIVE
C         N MUST BE GREATER THAN OR EQUAL TO ZERO
C
C         CHECK FOR ERRORS IN N AND X AND EXIT CONDITIONAL
C
          IER=0
          BI=1.0
          IF(N)150,15,10
10        IF(X)160,20,20
15        IF(X)160,17,20
17        RETURN
C
C         DEFINE TOLERANCE
C
20        TOL=1.E-4
C
C         IF ARGUMENT GT 12 AND GT N, USE ASYMPTOTIC FORM
C
          IF(X-12.)40,40,30
30        IF(X-FLOAT(N))40,40,110
C
C         COMPUT FIRST TERM OF SERIES AND SET INITIAL VALUE OF THE SUM
C
40        XX=X/2.
          FACTN=1.0
          IF(N-1)70,70,50
50        DO 60 I=2,N
          FI=I
60        FACTN=FACTN*FI
70        TERM=(XX**N)/FACTN
          BI=TERM
          XX=XX*XX
C
C         COMPUTE UP TO 30 TERMS, STOPPING WHEN ABS(TERM) LE ABS(SUM OF
C            TERM TIMES TOLERANCE
C
          DO 90 K=1,30
          IF(ABS(TERM)-ABS(BI*TOL))100,100,80
80        FK=K*(N+K)
          TERM=TERM*(XX/FK)
90        BI=BI+TERM
C
C         RETURN BI AS ANSWER
C
100       RETURN
C
C         X GT 12 AND X GT N, SO USE ASYMPTOTIC APPROXIMATION
C
110       FNT=4*N*N
          XX=1./(8.*X)
          TERM=1.
          BI=1.
          DO 130 K=1,30
          IF(ABS(TERM)-ABS(TOL*BI))140,140,120
120       FK=(2*K-1)**2
```

```
      TERM=TERM*XX*(FK-FNT)/FLOAT(K)
  130 BI=BI+TERM
  140 PI=3.141592653
      BI=BI*EXP(X)/SQRT(2.*PI*X)
      GO TO 100
  150 IER=1
      GO TO 100
  160 IER=2
      GO TO 100
C****************************************************************
      FUNCTION BJP(X,N)
C*
C* CALCULATE THE DERIVATIVE OF THE BESSEL FUNCTION OF THE FIRST
C* KIND OF ORDER N
C*
      IF(N.EQ.0)BJP=-1.0*BJ(X,N+1)
      IF(N.GT.0)BJP=0.5*(BJ(X,N-1)-BJ(X,N+1))
 1111 RETURN
C******************************************************************
      FUNCTION BYP(X,N)
C*
C* DERIVATIVE OF THE BESSEL FUNCTION OF THE SECOND KIND OF ORDER N
C*
      IF(N.EQ.0)BYP=-1.0*BY(X,N+1)
      IF(N.GT.0)BYP=0.5*(BY(X,N-1)-BY(X,N+1))
 1111 RETURN
C*********************************************************************
      FUNCTION BIP(X,N)
C*
C*  DERIVATIVE OF THE MODIFIED BESSEL FUNCTION OF THE FIRST KIND
      IF(N.EQ.0)BIP=-1.0*BI(X,N+1)
      IF(N.GT.0)BIP=0.5*(BI(X,N-1)-BI(X,N+1))
      RETURN
      END

FTN 10125 IBANK 3680 DBANK 299 COMMON
```

ORIGINAL PAGE IS
OF POOR QUALITY

```
,S  XX.MDLPRM,XX.
1CR1A  12/14/83-18:39(12,)
C*****************************************************************
     SUBROUTINE MDLPRM(WNMC,VMNPA,ZANN,RMN,RJA,WM,NM,SPL,CENTF,ISTYP,
    *NSTOR,NAMT,NPROBN,NFS,NTAPE,NSMX,NMS,NSMT,
    *PREF,NAM,NV,NS,NTOB,ZMDATA,LBAND,MBAND,L4,L8,L9,L10)
C*****************************************************************
     DIMENSION WNMC(NAM),VMNPA(NAM),ZANN(NAM),RMN(NAM,NV),
    *WM(3,NSMX),NM(NMS),SPL(NTOB),CENTF(NTOB),NSTOR(NS),
    *ZMDATA(NTOB,NMS),RJA(NTOB),ISTYP(NS)
      IOUT=6
     DO  15 I=1,NTOB
  15 CENTF(I)=CENTF(I)/6.283185
     DO 20 I=1,NAM
  20 WNMC(I)=WNMC(I)/6.283185
     WRITE(IOUT,1) NTAPE,NPROBN
     WRITE(IOUT,2)
     READ(L4'NPROBN) RMN
     DO 100 I=1,NAM
 100 WRITE(IOUT,3) WNMC(I),VMNPA(I),ZANN(I)
     WRITE(IOUT,4)
     WRITE(IOUT,5)
     DO 200 I=1,NAM
     WRITE(IOUT,6) WNMC(I)
     DO 150 J=1,NV
 150 WRITE(IOUT,7) J,RMN(I,J)
 200 CONTINUE
     SUB=0.0
     WRITE(IOUT,8)
     WRITE(IOUT,9)
     DO 300 I=1,NMS
     IF(ISTYP(I).EQ.0)GOTO 300
     IR=3*NFS+NSTOR(I)
     READ(L8'IR,ERR=111)SPL
     IR=       NSTOR(I)
     READ(L9'IR,ERR=111) WM
     WRITE(IOUT,10)I,NTAPE,NSTOR(I)
     WRITE(IOUT,11) PREF
     DO  250 J=LBAND,MBAND
 250 WRITE(IOUT,12) CENTF(J),SPL(J), ZMDATA(J,I)
     DO 280 J=1,NM(I)
     WRITE(IOUT,13)WM(1,J)/6.28315
     IR=(NSTOR(I)-1)*NSMT+J
     READ(L10'IR,ERR=111)RJA
     DO 275 K=LBAND,MBAND
     WRITE(ICUT,14)CENTF(K),RJA(K)
 275 CONTINUE
 280 CONTINUE
 300 CONTINUE
     DO 350 I=1,NTOB
 350 CENTF(I)=CENTF(I)*6.28315
     DO 360 I=1,NAM
 360 WNMC(I)=WNMC(I)*6.28315
   1  FORMAT(43X,'ACOUSTIC PARAMETERS',5X,'TAPE# ',I3,', PROBLEM# '
    *,I3/43X,'*********************')
   2 FORMAT(//25X,'CAVITY NATURAL FREQUENCIES (HZ)      GENERALIZED MASS
    *',11X,'DAMPING (LOSS FACTOR)'/25X,'*******************************
```

ORIGINAL PAGE IS
OF POOR QUALITY

```
     A',5X,'*****************',11X,'**********************')
    3 FORMAT(35X,E10.5,19X,E10.5,19X,E10.5)
    4 FORMAT(/////25X,'DISTRIBUTION OF ACOUSTIC ENERGY')
    5 FORMAT(/,25X,'CAVITY NATURAL FREQUENCIES (HZ)',10X,'VOLUME',24X,
     *    'RMN'/25X, '********************************',10X,'******',21X,
     A'***********')
    6 FORMAT(35X,E10.5)
    7 FORMAT(67X,I3,23X,E10.5)
    8 FORMAT(/////56X,'STRUCTURAL PARAMETERS',/56X,
     A'**********************')
    9 FORMAT(//46X,'MODAL ANALYSIS'/46X,'**************')
   10 FORMAT(//44X,'* SURFACE ',I3,' (SAVED ON TAPE ',I3,', SURFACE ',
     AI3,')')
   11 FORMAT(///62X,'EXTERNAL SPL'/39X,'FREQUENCY (HZ)',6X,
     A'(DB,REF ',E10.5,')',9X,'ZMDATA'/39X,'***************',6X,
     A'*********************',7X,'***********')
   12 FORMAT(41X,E10.5,12X,E10.5,12X,E10.5)
   13 FORMAT(//39X,'NATURAL FRECUENCY (HZ)',7X,'BAND CENTER FREQUENCY'
     &,7X,'JOINT ACCEPTANCE'/39X,E10.5,29X,'**************',7X,
     &'**********')
   14 FORMAT(79X,E10.5,7X,E11.5)
      NAMT=NAMT
  111 RETURN
      END

FTN 321 IBANK 534 DBANK
```

```
..S  XX.CALC,XX.
1DR1A  12/14/83-18:39(42,)
C**********************************************************************
      SUBROUTINE CALC(ANS,ANSS,BNS,BNSS,WNMC,ZANN,VMNPA,RMN,NM,AREA,WM,
     &VLNM,SPL,RJA,ZM,CENTF,NSTOR,NV,NAM,NS,NMS,NSMX,NFS,NSMT,LBAND
     &,MBAND,NTOB,NPROBN,BW,ZERO,PREF,VOL,RO,CO,PI,L7,L8,L9,L10,IOUT,
     & SPLT,ISTYP,NST)
C*
C*
C*    ANS: SPACE AVERAGED, BAND AVERAGED PRESSURE OVER WHOLE
C*                MULTIPLE CAVITY SYSTEM
C*   ANSS: SPACE AVERAGED, BAND AVERAGED PRESSURE OVER EACH
C*                SUBVOLUME OF THE MULTIPLE CAVITY SYSTEM
C*    BNS: SPACE AVERAGED, BAND AVERAGED PRESSURE OVER WHOLE
C*                MULTIPLE CAVITY SYSTEM DUE ONLY TO SURFACE ISUR
C*   BNSS: SPACE AVERAGED, BAND AVERAGED PRESSURE OVER EACH
C*                SUBVOLUME OF THE MULTIPLE CAVITY SYSTEM DUE ONLY TO
C*                SURFACE ISUR
C*
C*
      DIMENSION WNMC(NAM),ZANN(NAM),VMNPA(NAM),RMN(NAM,NV),VLNM(NAM),
     *NM(NMS),AREA(NS),SPL(NTOB),ANS(NTOB),ANSS(NTOB,NV),WM(3,NSMX),
     *CENTF(NTOB),NSTOR(NS),ZM(NSMX) ,BNSS(NTOB,NV),BNS(NTOB)
      DIMENSION RJA(NTOB),SPLT(NTOB),ISTYP(NS)
      WRITE(IOUT,9)
      DO 20 I=1,MBAND
      ANS(I)=0.0
      DO 20 J=1,NMS
   20 ANSS(I,J)=0.0
C*
      DO 800 ISUR=1,NMS
      IF(ISTYP(ISUR).EQ.0)GOTO 800
C*
      FCT=RO**2*CO**4*AREA(ISUR)**4/VOL**2/2.
      DO 30 I=1,MBAND
      BNS(I)=0.0
      DO 30 J=1,NMS
   30 BNSS(I,J)=0.0
      IR=NSTOR(ISUR)
      READ(L9'IR)WM
      IR= NFS+NSTOR(ISUR)
      READ(L9' IR)(ZM(J),J=1,NM(ISUR))
      WRITE(6,*)ZM
      IR= 3*NFS+NSTOR(ISUR)
      READ(L8'IR) SPL
C
C
C
C
C
C
C
      DO 40 I=1,NTOB
   40 SPL(I)=PREF**2*10.**(SPL(I)/10.0)
C*
C*
      DO 500 MWM=1,NM(ISUR)
```

```
C*
C*
      IR=((ISUR-1)*NSMT+MWM+NSMT*NST*(NPROBN-1))
      READ(L7'IR)(VLNM(I),I=1,NAM)
      IR=(NSTOR(ISUR)-1)*NSMT+MWM
      READ(L10'IR)RJA
      DO 250 NWN=1,NAM
C****
      IF(ABS(VLNM(NWN)).LT.ZERO) GOTO 250
C****
      FAC=VLNM(NWN)**2/VMNPA(NWN)
      CALL COEF(A,B,C,D,E,F,G1,H,A1,P1,A2,P2,MWM,NWN)
      DO 100 I=LBAND,MBAND
      W1=CENTF(I)-BW*CENTF(I)
      W2=CENTF(I)+BW*CENTF(I)
      SOM=RJA(I)*FAC*FCT*SPL(I)/(2.*BW*CENTF(I))
      AN1=SOM*VINT(A,B,C,D,E,F,G1,H,A1,P1,A2,P2,W1,W2)
      ANS(I)=ANS(I)+AN1
      BNS(I)=BNS(I)+AN1
C****  CALCULATE SABAP OVER EACH SUBVOLUME OF THE SYSTEM
      DO 50 NVOL=1,NV
      ANSS(I,NVOL)=ANSS(I,NVOL)+AN1*RMN(NWN,NVOL)
      BNSS(I,NVOL)= BNSS(I,NVOL)+AN1* RMN(NWN,NVOL)
   50 CONTINUE
  100 CONTINUE
  250 CONTINUE
  500 CONTINUE
C***** WRITE OUT SABAP DUE TO SURFACE 'ISUR' ****************************
      WRITE(IOUT,10) ISUR
      DO 570 NVOL=1,NV
      WRITE(IOUT,2) NVOL
      WRITE(IOUT,3) PREF
      DO 560 I=LBAND,MBAND
      VAL= 10.*ALOG10(BNSS(I,NVOL)/PREF**2)
      FQ=CENTF(I)/2./PI
      WRITE(IOUT,5) FQ,VAL
  560 CONTINUE
  570 CONTINUE
      WRITE(IOUT,8)
      WRITE(IOUT,3) PREF
      TOT=0.0
      DO 580 I=LBAND,MBAND
      VAL= 10.0*ALOG10(BNS(I)/PREF**2)
      FQ=CENTF(I)/2./PI
      WRITE(IOUT,5) FQ,VAL
      TOT=TOT+BNS(I)
  580 CONTINUE
      TOT=10.0*ALOG10(TOT/PREF**2)
      WRITE(IOUT,7) TOT
C****
  800 CONTINUE
C****  CALCULATE SABAP DUE TO ALL THE SURFACES IN DB
C*****  AND MAKE CORRECTION FOR RERADIATION
      DO 803 NOB=1,NTOB
  803 SPLT(NOB)=0.0
      AT=0.0
      DO 804 IS=1,NMS
```

```
          IF(ISTYP(IS).EQ.0) GOTO 804
          AT=AT+AREA(IS)
      804 CONTINUE
          DO 806 IS=1,NMS
          IF(ISTYP(IS).EQ.0) GOTO 806
          IR=3*NFS+NSTOR(IS)
          READ(L8'IR)SPL
          DO 805 NOB=LBAND,MBAND
          SPL(NOB)=PREF**2*10.**(SPL(NOB)/10.)
      805 SPLT(NOB)=AREA(IS)/AT*SPL(NOB)+SPLT(NOB)
      806 CONTINUE
    C
    C
        2 FORMAT(///44X,'VOLUME - ',I3/44X,'*************')
        3 FORMAT(80X,'PRESSURE'/43X,'CENTER FREQUENCY (HZ)',10X,'(DB,REF& ',
         AE11.5,')'/40X,'*****************************',8X,
         A'*********************')
        5 FORMAT(48X,E11.5,21X,E11.5)
        7 FORMAT(/,50X,'OVERALL',22X,E11.5)
        8 FORMAT(///44X,'SYSTEM AVERAGE'/44X,'***************')
        9 FORMAT(8(/),56X,'PRELIMINARY RESULTS OF'/55X,'CLASSICAL MODAL ANAL
         AYSIS'/44X,'SPACE-AVERAGED,BAND-AVERAGED PRESSURE SQUARED'/44X,
         A'************************************************')
       10 FORMAT(///44X,'NOISE DUE TO MOTION OF SURFACE - ',I3)
          CALL MDLRES
     1111 RETURN
    C***********************************************************
          SUBROUTINE COEF(AAZ,BBZ,CCZ,DDZ,EEZ,FFZ,GGZ,HHZ,ALPHA1,PHI1,
         *ALPHA2,PHI2,MWM,NWN)
          DOUBLE PRECISION CA(4,5),DET
          COMPLEX X,Y
          A8=WM(1,MWM)
          B8=    ZM(MWM)
          E8=WNMC(NWN)
          D8=ZANN(NWN)
          IF(A8.EQ.E8)E8=E8+5.0
          G=4*A8**2*B8**2-2*A8**2
          ALPHA=-G/2
          PHI=((4*A8**4-G**2)**0.5)/2
          X=CMPLX(ALPHA,PHI)
          Y=CSQRT(X)
          ALPHA1=REAL(Y)
          PHI1=AIMAG(Y)
          G=4.*E8**2*D8**2-2.*E8**2
          ALPHA=-G/2
          PHI=((4*E8**4-G**2)**0.5)/2
          X=CMPLX(ALPHA,PHI)
          Y=CSQRT(X)
          ALPHA2=REAL(Y)
          PHI2=AIMAG(Y)
          S1=ALPHA1**2+PHI1**2
          S2=ALPHA2**2+PHI2**2
            CA(1,5)=0.D0
          CA(2,5)=0.D0
           CA(3,5)=1.D0
           CA(4,5)=0.D0
          CA(1,1)=DFLOAT(2*S1*S2**2)
```

```
      CA(1,2)=DFLOAT(0.000)
      CA(1,3)=DFLOAT(2*S1**2*S2)
      CA(1,4)=DFLOAT(0.0)
      CA(2,1)=DFLOAT(2*(S2**2+2*S1*S2-4*ALPHA2**2*S1))
      CA(2,2)=DFLOAT(4*ALPHA1*S2**2)
      CA(2,3)=DFLOAT(2*(S1**2+2*S1*S2-4*ALPHA1**2*S2))
      CA(2,4)=DFLOAT(4*ALPHA2*S1**2)
      CA(3,1)=DFLOAT(2*(2*S2+S1-4*ALPHA2**2))
      CA(3,2)=DFLOAT(2*(4*ALPHA1*S2-8*ALPHA1*ALPHA2**2))
      CA(3,3)=DFLOAT(2*(2*S1+S2-4*ALPHA1**2))
      CA(3,4)=DFLOAT(2*(4*ALPHA2*S1-8*ALPHA1**2*ALPHA2))
      CA(4,1)=DFLOAT(2.0)
      CA(4,2)=DFLOAT(4*ALPHA1)
      CA(4,3)=DFLOAT(2.0)
      CA(4,4)=DFLOAT(4*ALPHA2)
      CALL DPINV(CA,4,1,4,DET)
      BBZ=REAL(CA(1,5))
      CCZ=REAL(CA(2,5))
      FFZ=REAL(CA(3,5))
      GGZ=REAL(CA(4,5))
      DDZ=BBZ
      AAZ=-CCZ
      EEZ=-GGZ
      HHZ=FFZ
      RETURN
C***********************************************************************
      FUNCTION   VINT(AAZ,BBZ,CCZ,DDZ,EEZ,FFZ,GGZ,HHZ,ALPHA1,PHI1,
     *ALPHA2,PHI2,W1,W2)
      TERM1=(AAZ/2)*ALOG(W2**2+2*ALPHA1*W2+ALPHA1**2+PHI1**2)+((BBZ-
     *ALPHA1*AAZ)/PHI1)*ATAN((W2+ALPHA1)/PHI1)-((AAZ/2)*ALOG(W1**2+2*
     *ALPHA1*W1+ALPHA1**2+PHI1**2)+((BBZ-ALPHA1*AAZ)/PHI1)*ATAN((W1+
     *ALPHA1)/PHI1))
      TERM2=(CCZ/2)*ALOG(W2**2-2*ALPHA1*W2+ALPHA1**2+PHI1**2)+((CCZ*
     *ALPHA1+DDZ)/PHI1)*ATAN((W2-ALPHA1)/PHI1)-((CCZ/2)*ALOG(W1**2-2*
     *ALPHA1*W1+ALPHA1**2+PHI1**2)+((CCZ*ALPHA1+DDZ)/PHI1)*ATAN((W1-
     *ALPHA1)/PHI1))
      TERM3=(EEZ/2)*ALOG(W2**2+2*ALPHA2*W2+ALPHA2**2+PHI2**2)+((FFZ-
     *ALPHA2*EEZ)/PHI2)*ATAN((W2+ALPHA2)/PHI2)-((EEZ/2)*ALOG(W1**2+2*
     *ALPHA2*W1+ALPHA2**2+PHI2**2)+((FFZ-ALPHA2*EEZ)/PHI2)*ATAN((W1+
     *ALPHA2)/PHI2))
      TERM4=(GGZ/2)*ALOG(W2**2-2*ALPHA2*W2+ALPHA2**2+PHI2**2)+((GGZ*
     *ALPHA2+HHZ)/PHI2)*ATAN((W2-ALPHA2)/PHI2)-((GGZ/2)*ALOG(W1**2-2*
     *ALPHA2*W1+ALPHA2**2+PHI2**2)+((GGZ*ALPHA2+HHZ)/PHI2)*ATAN((W1-
     *ALPHA2)/PHI2))
      VINT=(TERM1+TERM2+TERM3+TERM4)
  111 RETURN
C***********************************************************************
      SUBROUTINE MDLRES
C*
C*
C*  MDLRES OUTPUTS THE FINAL RESULTS OF THE REQUESTED MODAL ANALYSIS
C*
  100 WRITE(IOUT,1)
      TOT=0.0
      DO 120 NVOL=1,NV
      WRITE(IOUT,2) NVOL
      WRITE(IOUT,3) PREF
```

ORIGINAL PAGE IS
OF POOR QUALITY

```
            WRITE(IOUT,4)
            DO 110 NOB=LBAND,MBAND
            ANSS(NOB,NVOL)=ANSS(NOB,NVOL)/(1+ANSS(NOB,NVOL)/SPLT(NOB))
            TOT=ANSS(NOB,NVOL)+TOT
            VAL=10.*ALOG10(ANSS(NOB,NVOL)/PREF**2)
            FQ=CENTF(NOB)/2./PI
            WRITE(IOUT,5) FQ,VAL
        110 CONTINUE
            TOT=10.*ALOG10(TOT/PREF**2)
            WRITE(IOUT,7) TOT
        120 CONTINUE
            TOT=0.0
            WRITE(IOUT,8)
            WRITE(IOUT,3) PREF
            WRITE(IOUT,4)
            DO  130 NOB=LBAND,MBAND
            ANS(NOB)=ANS(NOB)/(1+ANS(NOB)/SPLT(NOB))
            TOT=ANS(NOB)+TOT
            VAL=10.*ALOG10(ANS(NOB)/PREF**2)
            FQ=CENTF(NOB)/2./PI
            WRITE(IOUT,5) FQ,VAL
        130 CONTINUE
            TOT= 10.*ALOG10(TOT/PREF**2)
            WRITE(IOUT,7) TOT
      C**************************************************************
          1 FORMAT(8(/),44X,'SPACE-AVERAGED,BAND-AVERAGED PRESSURE SQUARED',
           *44X,'********************************************')
          2 FORMAT(///44X,'VOLUME - ',I3/44X,'*************')
          3 FORMAT(80X,'PRESSURE'/43X,'CENTER FREQUENCY (HZ)',10X,'(DB,REF& ',
           AE11.5,')'/40X,'***************************',8X,
           A'*********************')
          4 FORMAT(40X,'( MODAL ANALYSIS)')
          5 FORMAT(48X,E11.5,21X,E11.5)
          7 FORMAT(/,50X,'OVERALL',22X,E11.5)
          8 FORMAT(///44X,'SYSTEM AVERAGE'/44X,'**************')
      C****
       1111 RETURN
            END

FTN 1754 IBANK 1141 DBANK
```

ORIGINAL PAGE IS
OF POOR QUALITY

```
,S  XX.DFCALC.XX.
1OR1A  12/14/83-18:39(24,)
       C*****************************************************************
             SUBROUTINE DFCALC(ANS,ANSS,WNMC,ZANN,VMNPA,RMN,NM,AREA,WM,WF,WI,
            &VLNM,SPL,RJA,ZM,CENTF,NSTOR,NV,NSMT,NAM,NS,NMS,NSMX,NFS,ISTYP,
            &NWS,NTOB,NPROBN,ZERO,PREF,VOL,RO,CO,PI,NST,L7,L8,L9,L10,IOUT,BW,
            & TBND)
       C*
       C*   ANS: SPACE AVERAGED PRESSURE AT DESCRETE FREQUENCIES OVER WHOLE
       C*            MULTIPLE CAVITY SYSTEM
       C*  ANSS:  SPACE AVERAGED PRESSURE OVER EACH SUBVOLUME OF THE MULTIPLE
       C*          CAVITY SYSTEM
       C*
       C*
             DIMENSION WNMC(NAM),ZANN(NAM),VMNPA(NAM),RMN(NAM,NV),VLNM(NAM),
            *NM(NMS),AREA(NS),SPL(NTOB),ANS(NWS),ANSS(NWS,NV),WM(3,NSMX),
            *CENTF(NTOB),NSTOR(NS),ZM(NSMX),ISTYP(NS)
             DIMENSION RJA(NTOB),TBND(NWS)
             WF=2.*PI*WF
             WI=2.*PI*WI
             DW=(WF-WI)/NWS
             WRITE(IOUT,9)
             DO 20 I=1,NWS
             ANS(I)=0.0
             DO 20 J=1,NMS
          20 ANSS(I,J)=C.0
             DO 24 I=1,NWS
             DO 22 NOB=1,NTOB
             WL=CENTF(NOB)*(1-BW)
             WH=CENTF(NOB)*(1+BW)
             TS=WI+I*DW
          22 I=(TS.GT.WL.AND.TS.LT.WH)GOTO 23
          23 TBND(I)=NOB*1.
          24 CONTINUE
             DO 800 ISUR=1,NMS
             IF(ISTYP(ISUR).EQ.0)GOTO 800
             FCT=RO**2*CO**4*AREA(ISUR)**4/VOL**2/2.
             IR=NSTOR(ISUR)
             READ(L9'IR)WM
             IR= NFS+NSTOR(ISUR)
             READ(L9' IR)(ZM(J),J=1,NM(ISUR))
             IR= 3*NFS+NSTOR(ISUR)
             READ(L8'IR) SPL
             DO 25 I=1,NTOB
          25 SPL(I)=PREF**2*10**(SPL(I)/10.)
             WRITE(6,*)ZM
             WRITE(6,*)WM
             WRITE(6,*)WNMC
             WRITE(6,*)ZANN
             DO 500 MWM=1,NM(ISUR)
             IR=((ISUR-1)*NSMT+MWM+NSMT*NST*(NPROBN-1))
             READ(L7'IR)VLNM
             IR=(NSTOR(ISUR)-1)*NSMT+MWM
             READ(L10'IR)RJA
             DO 250 NWN=1,NAM
       C****
             IF(ABS(VLNM(NWN)).LT.ZERO) GOTO 250
```

```
C****
          FAC=VLNM(NWN)**2/VMNPA(NWN)
          DO 100 I=1,NWS
          NOB=INT(TBND(I))
          SQM=RJA(NOB)*FCT*FAC*SPL(NOB)/(2*BW*CENTF(NOB))
          AN1=SQM*VQ(WM(1,MWM),WNMC(NWN),ZM(MWM),ZANN(NWN),I,DW)
          ANS(I)=ANS(I)+AN1
C****  CALCULATE SABAP OVER EACH SUBVOLUME OF THE SYSTEM
          DO 50 NVOL=1,NV
          ANSS(I,NVOL)=ANSS(I,NVOL)+AN1*RMN(NWN,NVOL)
       50 CONTINUE
      100 CONTINUE
      250 CONTINUE
      500 CONTINUE
C****  MAKE CORRECTION FOR RERADIATION THROUGH THE SURFACE AND CONVERT
C****  INTO PRESSURE
          DO 540 K=1,NWS
          NOB=INT(TBND(K))
          ANS(K)=ANS(K)/(1+ANS(K)/SPL(NOB))
          DO 530 NVOL=1,NV
          ANSS(K,NVOL)=FAC*ANSS(K,NVOL)
          ANSS(K,NVOL)=ANSS(K,NVOL)/(1+ANSS(K,NVOL)/SPL(NOB))
      530 CONTINUE
      540 CONTINUE
      800 CONTINUE
C***** WRITE OUT SABAP DUE TO ALL THE SURFACES *************************
          DO 570 NVOL=1,NV
          WRITE(IOUT,2) NVOL
          WRITE(IOUT,3) PREF
          DO 560 I=1,NWS
          VAL= 10.*ALOG10(ANSS(I,NVOL)/PREF**2)
          FQ=(I*DW+WI)/2./PI
          WRITE(IOUT,5) FQ,VAL
     560  CONTINUE
     570  CONTINUE
          WRITE(IOUT,8)
          WRITE(IOUT,3) PREF
          TOT=0.0
          DO 580 I=1,NWS
          VAL= 10.*ALOG10(ANS(I)/PREF**2)
          FQ=(I*DW+WI)/2./PI
          WRITE(IOUT,5) FQ,VAL
          TOT=TOT+ANS(I)
      580 CONTINUE
          TOT=10.0*ALOG10(TOT/PREF**2)
          WRITE(IOUT,7) TOT
C****
        2 FORMAT(///44X,'VOLUME - ',I3/44X,'************')
        3 FORMAT(80X,'PRESSURE'/43X,' FREQUENCY (HZ)',10X,'(DB,REF& ',
         AE10.5,')'/40X,'***************************',8X,
         A'*********************')
        5 FORMAT(48X,E10.5,21X,E10.5)
        7 FORMAT(/,50X,'OVERALL',22X,E10.5)
        8 FORMAT(///44X,'SYSTEM AVERAGE'/44X,'**************')
        9 FORMAT(8(/),56X,'PRELIMINARY RESULTS OF'/55X,'CLASSICAL MODAL ANAL
         AYSIS'/44X,'SPACE-AVERAGED, PRESSURE SQUARED'/44X,
         A'************************************************')
```

```
 1111 RETURN
C*****************************************************************
      FUNCTION VC(SF,AF,SZ,AZ,I,DW)
      FRQ=I*DW+WI
      VQ=FRQ**4/((SF**2-FRQ**2)**2+4*SZ**2*FRQ**2*SF**2)
     &  /((AF**2-FRQ**2)**2+4*AZ**2*FRQ**2*AF**2)
      RETURN
      END
```

```
FTN 836 IBANK 516 DBANK
```

```
V,S  XX.HFREQ,XX.
1DR1A  12/14/83-18:39(47,)
C***********************************************************************
      SUBROUTINE HFREQ(RJA,SPL,CENTF,AREA,AREAO,MD,ZMDATA
     *,MASSUR,RJARV,ZNDATA,IOTYP,IGEMOV,ISV,
     *C,NV,NV1,IHBAND,NTOB,NS,NOO,NMS,MNSS,BW,NFS,ANSS,
     *EX,MBAND,WMH,NSDAT,NSTOR,ISEAO,IPF,NFV,NSEAC,NPFC,NPROBN,MOP,
     *L2,L8,L13,L14)
C***********************************************************************
C***********  STATISTICAL ENERGY ANALYSIS  *******************
      COMMON/AREA8/RO,CO,VOL,PREF,PI
      REAL RJA(NS,NTOB),SPL(NMS,NTOB),CENTF(NTOB),AREA(NS)
     &,ZMDATA(NMS,NTOB),RJARV(NS,NTOB),ZNDATA(NTOB,NS)
     &,EX(NPFC,NMS)
      DIMENSION MD(NMS,NTOB),IOTYP(NOO),AREAO(NOO),ISEAO(NMS),IPF(NMS),
     *MASSUR(MNSS,NMS),IGEMOV(2,NS),ISV(NS),MOP(4)
     *,ANSS(NTOB,NV),WMH(NSEAC,NTOB),NSDAT(NMS),NSTOR(NMS)
      DOUBLE PRECISION C(NV,NV1),DET
      CHARACTER*10 CHR
      LAST=MBAND
      LAST1=MBAND-2
C*********** LOAD ACOUSTIC LOSS FACTOR FOR EACH SURFACE **********
      IR=2*NFV+NPROBN
      READ(L2'IR)ZNDATA
C****  LOAD STRUCTURAL LOSS FACTOR FOR EACH SURFACE
      DO 20 IS=1,NMS
      IR=2*NFS+NSTOR(IS)
      READ(L8'IR)(ZMDATA(IS,J),J=1,NTOB)
   20 CONTINUE
C***********  LOAD REFERENCE SPL ******************************
      DO 30 IS=1,NMS
      IR= 3*NFS+ NSTOR(IS)
      READ(L8'IR)(SPL(IS,J),J=1,NTOB)
      DO 30 J=1,NTOB
      SPL(IS,J)=PREF**2*10.**(SPL(IS,J)/10.)
   30 CONTINUE
C******** ZERO JOINT ACCEPTANCE ARRAYS *********************
      DO 50 I=1,NS
      DO 50 J=1,NTOB
      RJA(I,J)=0.0
      RJARV(I,J)=0.0
   50 CONTINUE
C**** CALL SEA CALCULATIONS
      CALL MDEN
      CALL CJA
      CALL HFCAL
 1111 RETURN
C***********************************************************************
      SUBROUTINE CJA
      DO 2000 IS=1,NMS
      IF(ISEAO(IS).EQ.0)GOTO 2000
      IF(NSDAT(IS).NE.0) GOTO 2000
      IR=NSTOR(IS)
      READ(L13'IR) WMH
      DO 1500 K=1,2
      DO 1000 NOB=MBAND-2,IHBAND
      NOB1=NOB
```

```
      CALL RJAEST(RAD,IS,NOB,NOB1,K)
      IF(K.EQ.1)RJA(IS,NOB)=RAD
      IF(K.EQ.2)RJARV(IS,NOB)=RAD
      IF(K.EQ.1.AND.IPF(IS).EQ.1)RJARV(IS,NOB)=RAD
 1000 CONTINUE
      IF(IPF(IS).EQ.1) GOTO 2000
 1500 CONTINUE
 2000 CONTINUE
C**** STORE CALCULATED DATA ON TAPE
      DO 2050 IS=1,NMS
      IF(ISEAO(IS).EQ.0)GOTO 2050
      IF(NSDAT(IS).NE.0)GOTO 2050
      IR=NSTOR(IS)
      WRITE(L14'IR)(RJA(IS,J),J=1,NTOB)
      IR=NFS+NSTOR(IS)
      WRITE(L14'IR)(RJARV(IS,J),J=1,NTOB)
 2050 CONTINUE
C****  LOAD PREVIOUSLY CALCULATED RJA,RJARV
      DO 2100 IS=1,NMS
      IF(ISEAO(IS).EQ.0)GOTO 2100
      IF(NSDAT(IS).EQ.0)GOTO 2100
      IR=NSDAT(IS)
      READ(L14'IR)(RJA(IS,J),J=1,NTOB)
      IR=NFS+NSDAT(IS)
      READ(L14'IR)(RJARV(IS,J),J=1,NTOB)
 2100  CONTINUE
C**** ASSIGN JOINT ACCEPTANCE TO EACH SUBSURFACE IN DIRECT PROPORTION
C**** TO SURFACE AREA RATIO
      DO 4000 IS=1,NMS
      IF(ISEAO(IS).EQ.0)GOTO 4000
      DO 3000 I=1,MNSS
      ISUR=MASSUR(I,IS)
      IF(ISUR.EQ.IS) GOTO 4000
      DO 2500 NOB=MBAND,IHBAND
      RJARV(ISUR,NOB)=AREA(ISUR)/AREA(IS)*RJARV(IS,NOB)
 2500 RJA(ISUR,NOB)=AREA(ISUR)/AREA(IS)*RJA(IS,NOB)
 3000 CONTINUE
 4000 CONTINUE
 1111 RETURN
C*****************************************************************************
C********* HIGH FREQUENCY CALCULATIONS **************
C*****************************************************************
      SUBROUTINE HFCAL
      DO 5000 NOB=MBAND,IHBAND
      MDL=0
      DO 25 IS=1,NMS
   25 IF(MD(IS,NOB).GT.0)MDL=MD(IS,NOB)
      IF(MDL.EQ.0)GOTO 5000
      DO 50 I=1,NV
      DO 50 J=1,NV1
   50 C(I,J)=0.D0
C************* FILL THE  C  MATRIX ***************
      DO 1000 NVOL=1,NV
      WRITE(6,*)NV
      CHR='COT'
      WRITE(6,*)CHR
C**** CALCUALTE THE POWER TRANSFERRED OUT OF THE VOLUME THROUGH
```

```
C**** THE STRUCTURAL WALLS ADJACENT TO THE VOLUME.
      IF(MOP(3).EQ.1)GOTO 100
      DO 100 IS=1,NMS
      IF(ISEAO(IS).EQ.0)GOTO 100
      DO 90 I=1,MNSS
      ISUR=MASSUR(I,IS)
      IF(ISUR.EQ.0) GO TO 100
      IF(ISV(ISUR).NE.NVOL) GO TO 90
      C(NVOL,NVOL)= C(NVOL,NVOL) + DFLOAT(COT(IS,ISUR,NOB))
   90 CONTINUE
  100 CONTINUE
C**** CALCULATE THE POWER TRANSFERRED OUT OF THE SUBVOLUME THROUGH
C**** THE OPENINGS
      DO 200 ISUR=1,NOO
      IF(IGEMOV(1,ISUR).EQ.NVOL.OR.IGEMOV(2,ISUR).EQ.NVOL)C(NVOL,NVOL)=
     *C(NVOL,NVOL) +DFLOAT(CVT(ISUR,NOB))
  200 CONTINUE
C**** CALCULATE THE POWER ABSORBED BY THE WALLS OF THE SUBVOLUME
      CHR='CBS'
      WRITE(6,*)CHR
      DO 300 ISUR=1,NS
      IF(ISEAO(ISUR).EQ.0)GOTO 300
      IF(ISV(ISUR).NE.NVOL) GO TO 300
      C(NVOL,NVOL)= C(NVOL,NVOL) +  DFLOAT(CBS(ISUR,NOB))
  300 CONTINUE
C**** CALCULATE THE POWER TRANSFERRED INTO THE SUBVOLUME FROM OTHER
C**** SUBVOLUMES
      DO 500 IVOL=1,NV
      DO 400 ISUR=1,NOO
      IF(IGEMOV(1,ISUR).EQ.NVOL.AND.IGEMOV(2,ISUR).EQ.IVOL)GO TO 350
      IF(IGEMOV(2,ISUR).EQ.NVOL.AND.IGEMOV(1,ISUR).EQ.IVOL)GO TO 350
      GO TO 400
  350 C(NVOL,IVOL)= C(NVOL,IVOL)-DFLOAT(CVT(ISUR,NOB))
  400 CONTINUE
  500 CONTINUE
 1000 CONTINUE
C**** CALCULATE THE POWER TRANSFERRED INTO THE SUBVOLUME THROUGH THE
C**** STRUCTURAL WALLS ADJACENT TO THAT SUBVOLUME
      DO 1100 I=1,NV
 1100 C(I,NV1)=0.0
      CHR='WIN'
      WRITE(6,*)CHR
      DO 2000 NVOL=1,NV
      DO 1500 IS=1,NMS
      IF(ISEAO(IS).EQ.0)GOTO 1500
      DO 1400 I=1,MNSS
      ISUR=MASSUR(I,IS)
      IF(ISUR.EQ.0) GO TO 1500
      IF(ISV(ISUR).NE.NVOL) GO TO 1500
      C(NVOL,NV1)= C(NVOL,NV1)+DFLOAT(SPL(IS,NOB))* DFLOAT(WIN(IS,ISUR,
     &NOB))/DFLOAT(2.*BW*CENTF(NOB))
 1400 CONTINUE
 1500 CONTINUE
 2000 CONTINUE
C**** SOLVE EQUATIONS AND STORE RESULTS IN APPROPRIATE ARRAYS
      WRITE(6,*)C,NOB
      M=1
```

```
      IF(NV.GT.1)CALL DPINV(C,NV,M,NV,DET)
      IF(NV.EQ.1)C(1,NV1)=C(1,NV1)/C(1,1)
      WRITE(6,*)10.D0*DLOG10(C(1,NV1)/DFLOAT(PREF)**2)
      DO 2100 I=1,NV
      C(I,NV1)=10.D0*DLOG10(C(I,NV1)/DFLOAT(PREF)**2)
 2100 ANSS(NOB,I)= REAL(C(I,NV1))
      WRITE(6,*)C(1,NV1)
 5000 CONTINUE
      RETURN
C********************************************************************
      FUNCTION WIN(IS,ISUR,NOB)
C*
C* CALCULATE POWER FLOW INTO SUBVOLUME THROUGH THE STRUCTURAL WALLS
C*
      RN=0.0
      DO 10 J=1,2
      G=-2.0*CENTF(NOB-J)
      A=CENTF(NOB-J)**4*(1+4.0*ZMDATA(IS,NOB-J)**2)
      PHI=0.5*(4.0*A-G**2)**0.5
      WR=CENTF(NOB-J)
      AL=-G/2.0
      CALL VINTE(VIN,NOB,AL,PHI,B,WR)
   10 RN=RN+2.*VIN*RJA(ISUR,NOB-J)*RJARV(ISUR,NOB-J)*MD(IS,NOB-J)
      WIN=(RO*AREA(ISUR)**4/4.0/PI/CO)*
     & (RN+MD(IS,NOB)*RJA(ISUR,NOB)*RJARV(ISUR,NOB)*PI*CENTF(NOB)/
     & (2.*ZMDATA(IS,NOB)))
      RN=RN*(RO*AREA(ISUR)**4/4./PI/CO)
      WRITE(6,*)IS,ISUR,NOB,MD(IS,NOB),RN,WIN
      RETURN
C*******************************************************************
      FUNCTION COT(IS,ISUR,NOB)
C*
C*  CALCUALTE THE POWER FLOW OUT OF THE SUBVOLUMES THROUGH THE WALLS
C*
      COT=PI*AREA(ISUR)**2*MD(IS,NOB)*RJARV(ISUR,NOB)
      WRITE(6,*)IS,ISUR,NOB,MD(IS,NOB),COT
      RETURN
C*******************************************************************
      FUNCTION  CBS(ISUR,NOB)
       CBS= AREA(ISUR)*ZNDATA(NOB,ISUR)/4./RO/CO
      WRITE(6,*)ISUR,NOB,CBS
      RETURN
C*******************************************************************
      FUNCTION CVT(ISUR,NOB)
      D= (4.0*AREAO(ISUR)/PI)**0.5
      WVN=CENTF(NOB)/CO
      CVT= AREAO(ISUR)/4./RO/CO*COND(D,WVN,ISUR)
      RETURN
C*******************************************************************
      FUNCTION COND(D,WVN,ISUR)
      CM= D*WVN
      IF(IOTYP(ISUR).EQ.1) GO TO 10
      IF(CM.LE.1.44) THA= (D*WVN)**2/8.0
      IF(CM.GT.1.44.AND.CM.LT.3.557)THA=0.35*CM-0.245
      IF(CM.GE.3.557) THA=1.0
      IF(CM.LE.1.626) XX=CM*4./3./PI
      IF(CM.GT.1.626.AND.CM.LE.3.433) XX=0.69
```

```
      IF(CM.GT.3.443.AND.CM.LT.5.4644) XX=1.4625-0.225*CM
      IF(CM.GE.5.4644) XX=4./PI/CM
      COND= THA/(THA**2.+XX**2.)
      RETURN
   10 IF(CM.LE.0.8367) THA= CM**2./16.0
      IF(CM.GT.0.8367.AND.CM.LE.5.3165) THA= 0.1652* CM-0.1112
      IF(CM.GT.5.3165.AND.CM.LT.20.0) THA= 0.005*CM+0.9
      IF(CM.GE.20.) THA=1.0
      IF(CM.LE.2.121) XX=CM*8./9./PI
      IF(CM.GT.2.121.AND.CM.LE.4.2) XX=0.6
      IF(CM.GT.4.2.AND.CM.LT.6.602) XX= 0.9746-0.0892*CM
      IF(CM.GE.6.602) XX=8.0/PI/CM
      COND= THA/(THA**2. +XX**2.)
      RETURN
C**********************************************************************
      SUBROUTINE VINTE(VIN,NOB,ALPHA1,PHI1,G,WR)
      COMPLEX X,Y
      W1=CENTF(NOB)*(1-BW)
      W2=CENTF(NOB)*(1+BW)
      X=CMPLX(ALPHA1,PHI1)
      Y=CSQRT(X)
      ALPHA1=REAL(Y)
      PHI1=AIMAG(Y)
      AAZ=(G-WR**4/(ALPHA1**2+PHI1**2))/(4*ALPHA1)
      BBZ=-WR**4/2/(ALPHA1**2+PHI1**2)
      CCZ=-AAZ
      DDZ=BBZ
      TERM1=(AAZ/2)*ALOG(W2**2+2*ALPHA1*W2+ALPHA1**2+PHI1**2)+((BBZ-
     *ALPHA1*AAZ)/PHI1)*ATAN((W2+ALPHA1)/PHI1)-((AAZ/2)*ALOG(W1**2+2*
     *ALPHA1*W1+ALPHA1**2+PHI1**2)+((BBZ-ALPHA1*AAZ)/PHI1)*ATAN((W1+
     *ALPHA1)/PHI1))
      TERM2=(CCZ/2)*ALOG(W2**2-2*ALPHA1*W2+ALPHA1**2+PHI1**2)+((CCZ*
     *ALPHA1+DDZ)/PHI1)*ATAN((W2-ALPHA1)/PHI1)-((CCZ/2)*ALOG(W1**2-2*
     *ALPHA1*W1+ALPHA1**2+PHI1**2)+((CCZ*ALPHA1+DDZ)/PHI1)*ATAN((W1-
     *ALPHA1)/PHI1))
      VIN=TERM1+TERM2+(W2-W1)
      VIN=VIN*2.
      RETURN
C************************************************************
      SUBROUTINE MDEN
C*
C*    CALCULATE THE MODAL DENSITY OF THE SEA SURFACE
      DO 1000 IS=1,NMS
      IF(ISEAO(IS).EQ.1)GOTO 1000
      IF(NSDAT(IS).NE.0)GOTO 1000
      IR=NSTOR(IS)
      READ(L13'IR)WMH
      GOTO(10,20,30),ISEAO(IS)
C****  SEA SURFACE TYPE #1. EQUIVALENT ORTHOTROPIC PANEL
C*    SUMS ALL MODES WITHIN EACH BAND AND CALCULATES AND AVERAGE
C*    M AND N INDEX FOR THE BAND
   10 CONTINUE
      LAST1=MBAND-2
      FAC=(WMH(1,1)*WMH(1,2))**0.5
      XL=WMH(1,7)
      YL=WMH(1,8)
      FACX=(WMH(1,1)/FAC)**0.5
```

ORIGINAL PAGE IS
OF POOR QUALITY

```
      FACY=(WMH(1,2)/FAC)**0.5
      FACXY=(WMH(1,1)*WMH(1,4)+WMH(1,2)* WMH(1,5)+WMH(1,3))/2.0
      IF(WMH(1,1).EQ.WMH(1,2)) FACXY=FAC
      FAC1=(FAC/WMH(1,6))**0.5*PI**2
      DO 19 NOB=LAST1,IHBAND
      WL=CENTF(NOB)/FAC1*(1-BW)
      WH=CENTF(NOB)/FAC1*(1+BW)
      NC=0
      MT=0
      NT=0
C*  THIS LOOP IS NOT INTENDED TO BE COMPLETED. THE LOOP IS CUT SHORT
C*  WHEN ALL MODES IN THE BAND HAVE BEEN CALCULATED.
      DO 17 M=1,5000
      DO 16 N=1,5000
      VAL=(FACX*(M/XL)**2+FACY*(N/YL)**2)**2+2.*(M/XL)**2*(N/YL)**2
     & *(FACXY/FAC-1)
      VAL=SQRT(VAL)
      IF(VAL.LT.WL)GOTO 15
      IF(VAL.GT.WH)GOTO 11
      NC=NC+1
      MT=MT+M
      NT=NT+N
   15 CONTINUE
   16 CONTINUE
   11  CONTINUE
      IF(N.GT.1)GOTO 17
      GOTO 18
   17 CONTINUE
C***   CALCULATE THE AVERAGE M AND N FOR THE BAND
   18 CONTINUE
      WMH(2,NOB)=ANINT(MT*1./NC)
      WMH(3,NOB)=ANINT(NT*1./NC)
      IF((-1.)**(WMH(2,NOB)+WMH(3,NOB)).LT.0.)WMH(2,NOB)=WMH(2,NOB)+1
C*  THE ABOVE STAEMENT  PREVENTS THE M,N INDEXES FROM HAVING
C*  VALUES THAT RESULT IN ZERO JOINT ACCEPTANCE.
      MD(IS,NOB)=NC
   19 CONTINUE
      IR=NSTOR(IS)
      WRITE(L13'IR)WMH
      GOTO 1000
C**** SEA SURFACE TYPE #2. CYLINDERICAL SHELL
   20 CONTINUE
      WR=WMH(1,6)/WMH(1,1)
      FAC=2.*3**.5*WMH(1,2)/WMH(1,3)
      DO 29 NOB=MBAND-2,IHBAND
      DW=2.*BW*CENTF(NOB)/WR
      WH=CENTF(NOB)/WR
      IF(WH.LT.0.85)MD(IS,NOB)=FAC*0.178*WH**0.5*DW+.5
      IF(WH.GT.0.85.AND.WH.LT.1.15) MD(IS,NOB)=FAC*0.8*DW+.5
      IF(WH.GT.1.15)MD(IS,NOB)=FAC*0.25*DW+.5
   29 CONTINUE
      GOTO 1000
C****  SEA SURFACE TYPE #3. DATA
   30 CONTINUE
      DO 39 NOB=MBAND-2,NTOB
   39 MD(IS,NOB)=WMH(3,NOB)*CENTF(NOB)*BW*2.0
      GOTO 1000
```

```
C****
 1000 CONTINUE
      DO 1050 IS=1,NMS
      IF(NSDAT(IS).NE.0)GOTO 1050
      IR=2*NFS+NSTOR(IS)
      WRITE(L14'IR)(MD(IS,I),I=1,NTOB)
 1050 CONTINUE
      DO 1075 IS=1,NMS
      IF(NSDAT(IS).EQ.0)GOTO 1075
      IR=2*NFS+NSTOR(IS)
      READ(L14'IR)(MD(IS,I),I=1,NTOB)
 1075 CONTINUE
 1111 RETURN
C******************************************************************
C*******************************************************************
      SUBROUTINE RJAEST(RAD,IS,NOB,NOB1,K)
C*
C* CALCUALTE THE JOINT ACCEPTANCE BY EMPHIRICAL OR SEMI-EMPHIRICAL
C* EQUATIONS
C*    RAD=SOLUTION
C*     IS=SURFACE NUMBER
C*    NOB=BAND OF INTEREST
C*   NOB1=CONTRIBUTORY BAND
C*      K=EXTERNAL (K=1) OR REVERBERANT (K=2) PRESSURE FIELD
C*
C****  BRANCH TO SECTION FOR PRESSURE FIELD TYPE
      IF(K.EQ.2) GOTO 100
      GOTO (100,200,300),IPF(IS)
C***************************************************************
C**** PRESSURE FIELD TYPE #1. REVERBERANT FIELD
  100 CONTINUE
      GOTO(110,120,130),ISEAO(IS)
C******** SEA SURFACE TYPE #1.  EQUIVALENT RETANGULAR PANEL
  110 CONTINUE
      BX=WMH(1,7)*CENTF(NOB)/PI/CO
      BY=WMH(1,8)*CENTF(NOB)/PI/CO
      M=NINT(WMH(2,NOB1))
      MP=M
      N=NINT(WMH(3,NOB1))
      NP=N
      CALL RVBJA(VJP,BX,M,MP,PI)
      CALL RVBJA(VJQ,BY,N,NP,PI)
      RAD=VJP*VJQ*4.0/WMH(1,6)/AREA(IS)
      WRITE(6,*)IS,NOB,M,N,RAD
      GOTO 1111
C******** SEA SURFACE TYPE #2. CYLINDERICAL SHELL
  120 CONTINUE
      BX=2./3.*(4.*PI*WMH(1,1)/(4.*PI*WMH(1,1)+2.*WMH(1,2)))
      IF(CENTF(NOB)/WMH(1,5).GT.1.0)GOTO 121
      RAD=BX*(PI/(2.0*RO*CO*(CENTF(NOB)/CO)**2*AREA(IS)**2))
     & *RO*CO*AREA(IS)*(CENTF(NOB)/WMH(1,5))**0.5/(WMH(1,4)/4.)
      WRITE(6,*)IS,NOB,RAD
      GOTO 1111
  121 RAD= BX*(PI/2./(CENTF(NOB)/WMH(1,5))**2/AREA(IS))/(WMH(1,4)/4.0)
      WRITE(6,*)IS,NOB,RAD
      GOTO 1111
C******** SEA SURFACE TYPE #3. DATA
```

```
  130 CONTINUE
      RAD=WMH(2,NOB)
      GOTO 1111
C****************************************************************
C**** PRESSURE FIELD TYPE #2. AERODYNAMIC TURBULENCE
  200 CONTINUE
      GOTO(210,220,230),ISEAO(IS)
C*******  SEA SURFACE TYPE #1.  EQUIVALENT RETANGULAR PANEL
  210 CONTINUE
      AX=EX(1,IS)
      AY=EX(3,IS)
      BX=WMH(1,7)*CENTF(NOB)/PI/CO
      BY=WMH(1,8)*CENTF(NOB)/PI/CO
      M=NINT(WMH(2,NOB1))
      MP=M
      N=NINT(WMH(3,NOB1))
      NP=N
      CALL ATJA(VJP,AX,BX,M,MP,PI)
      CALL ATJA(VJQ,AY,BY,N,NP,PI)
      RAD=VJP*VJQ*4.0/WMH(1,6)/AREA(IS)
      GOTO 1111
C*******  SEA SURFACE TYPE #2. CYLINDERICAL SHELL
  220 CONTINUE
      GOTO 120
C*******  SEA SURFACE TYPE #3. DATA
  230 CONTINUE
      RAD=WMH(1,NOB)
      GOTO 1111
C****************************************************************
C****  PRESSURE FIELD TYPE #3. RANDOM PROGRESSIVE WAVE
  300 CONTINUE
      GOTO(310,320,330),ISEAO(IS)
C*        SEA SURFACE TYPE #1. EQUIVALENT RETANGULAR PANEL
  310 CONTINUE
      BX=WMH(1,7)*CENTF(NOB)/PI/CO
      BY=WMH(1,8)*CENTF(NOB)/PI/CO
      M=NINT(WMH(2,NOB1))
      MP=M
      N=NINT(WMH(3,NOB1))
      NP=N
      CALL PWJA(VJP,BX,M,MP,PI)
      CALL PWJA(VJQ,BY,N,NP,PI)
      RAD=VJP*VJQ*4.0/WMH(1,6)/AREA(IS)
      GOTO 1111
C******* SEASURFACE TYPE #2. CYLINDERICAL SHELL
  320 CONTINUE
      GOTO 120
C******* SEA SURFACE TYPE #3. DATA
  330 CONTINUE
      RAD=WMH(1,NOB)
      GOTO 1111
 1111 RETURN
C********
C***********************************************************************
C******************************************************************
      SUBROUTINE PWJA(VJP,B,J,K,PI)
C*
```

ORIGINAL PAGE IS
OF POOR QUALITY

```
C*  ANALYTIC CALCULATION OF SIN*SIN MODE SHAPE AND PROGRESSIVE
C*    WAVE ACOUSTIC FIELD JOINT ACCEPTANCE
          VJP=0.0
          IF((-1)**(J+K).LT.0) GOTO 1111
          VJP=2.*J*K/PI**2/(J**2-B**2)/(K**2-B**2)*(1-(-1)**J*COS(PI*B))
   1111 RETURN
C*****************************************************************
          SUBROUTINE ATJA(VJP,AL,B,J,K,PI)
C* SPECIAL ROUTINE FOR THE ANALYTIC CALCULATION OF PROGRESSIVE
C* WAVE FIELD JOINT ACCEPTANCE WITH SIN*SIN MODE SHAPE
C*
          B1=(2./(J**2+K**2))**0.5*B
          BJ=B/J
          DJ=((AL**2+1)*BJ**2+1)**2-4*BJ**2
          IF(J.EQ.K) GO TO 10
          BK=B/K
          DK=((AL**2+1)*BK**2+1)**2-4*BK**2
          AJK=(J**2+K**2)**2/(2.*PI**2*J**3*K**3*DJ*DK)*(((AL**2-1)*B1**2+1
         ***2-4*(AL*B1**2)**2-(FLOAT((K**2-J**2))/(K**2+J**2))**2)
          BJK=2.*(J**2+K**2)**2/(PI**2*J**3*K**3*DJ*DK)*AL*B1**2*((AL**2-1)
         **B1**2+1)
          VJP=AJK*(1-(-1)**J*EXP(-PI*AL*B)*COS(PI*B))+BJK*((-1)**J*EXP(-PI*
         *AL*B)*SIN(PI*B))
          GOTO 1111
     10 AJ=2./((J*PI)**2*DJ**2)*(((AL**2-1)*BJ**2+1)**2-4*(AL*BJ**2)**2)
          EJ=8./(J*PI)**2/DJ**2*AL*BJ**2*((AL**2-1)*BJ**2+1)
          CJ=1./(J*PI)/DJ*AL*BJ*((AL**2+1)*BJ**2+1)
          VJP=AJ*(1-(-1)**J*EXP(-PI*AL*B)*COS(PI*B))+EJ*(-1)**J*EXP(-PI*AL*
         1)*SIN(PI*B)+CJ
   1111 RETURN
          SUBROUTINE RVBJA(VJP,B,J,K,PI)
C*
C*
C*        SPECIAL ROUTINE FOR ANALYTIC CALCULATION OF REVERBERANT
C*        FIELD JOINT ACCEPTANCE WITH SIN*SIN MODE SHAPE
C*
C*
          DOUBLE PRECISION E,F,G,H,DPI
          DPI=3.14159265D0
          VJP=0.0
          IF((-1)**(J+K).LT.0)GOTO 1111
          E=DPI*DBLE((B+J))
          F=DPI*DBLE((B-J))
          G=DPI*DBLE((B+K))
          H=DPI*DBLE((B-K))
          IF(J.EQ.K) GO TO 200
          T1=1.0/(PI**2*B*(K**2-J**2))
          VJP=T1*(K*(CIN(E)-CIN(F))-J*(CIN(G)-CIN(H)))
          GOTO 1111
    200 CONTINUE
          T1A=(1./(2.*J*PI**2*B))
          T1B=(CIN(E)-CIN(F))
          T1=T1A*T1B
          T2=(1./2./PI/B)*(SI(E)+SI(F))
           T3= (1./PI**2/(J**2-B**2))*(1.-(-1)**J*COS(PI*B))
          VJP=T1+T2+T3
   1111 RETURN
```

```
      FUNCTION SI(X)
      DOUBLE PRECISION X,A,A1,FC,PR
      IF(REAL(X).GT.30.)GOTO 25
      A=0.0D0
      FC=1.D0
      DO 10 N=0,40
      PR=DFLOAT(2*N+1)
      FC=FC*DFLOAT((2*N)*(2*N+1))
      IF(FC.EQ.0.0D0)FC=1.0D0
      A1=DFLOAT((-1)**N)*X**PR/PR/FC
      A=A+A1
      IF(ABS(A1).LE.1.0D-5 )  GO TO 20
   10 CONTINUE
   20 CONTINUE
      SI=REAL(A)
      RETURN
   25 SI=PI/2.0
      RETURN
      FUNCTION CIN(X)
      DOUBLE PRECISION X,A,A1,FC,PR
      IF(REAL(X).GT.30.)GOTO 25
      A=0.0D0
      FC=1.D0
      DO 10 N=1,40
      PR=DFLOAT(2*N)
      FC=FC* DFLOAT((2*N-1)*(2*N))
      A1=DFLOAT((-1)*(-1)**N)*X**PR/PR/FC
      A=A+A1
      IF(ABS(A1).LE.1.0D-5) GOTO 20
   10 CONTINUE
   20 CONTINUE
      CIN=REAL(A)
      RETURN
   25 CIN=0.5772157+ALOG(REAL(X))
      RETURN
      END

FTN 3883 IBANK 1548 DBANK 5 COMMON
```

```
,S   XX.SEAPRM,XX.
10R1A  12/14/83-18:39(14,)
            SUBROUTINE SEAPRM(RJA,RJARV,MD,ZMDATA,CENTF,SPL,
           &MBAND,IHBAND,NTOB,NMS,NTAPE,NSTOR,ZNDATA,IOUT,NS,ISEAO)
            DIMENSION RJA(NS,NTOB),RJARV(NS,NTOB),
           &MD(NMS,NTOB),ZMDATA(NMS,NTOB),CENTF(NTOB),
           &SPL(NMS,NTOB),NSTOR(NMS),ZNDATA(NTOB,NS),ISEAO(NMS)
            FAC=6.283185
            WRITE(IOUT,15)
            ISO=0
            DO 400 I=1,NMS
            IS=NSTOR(I)
            IF(IS.EQ.ISO)WRITE(IOUT,21)I,I-1
            IF(IS.EQ.ISO)GOTO 400
            IF(ISEAO(I).EQ.0) GOTO 400
            WRITE(IOUT,16) I,NTAPE,NSTOR(I)
            WRITE(IOUT,17)
            ISO=NSTOR(I)
            DO 350 J=MBAND,IHBAND
            FQ=CENTF(J)/FAC
            WRITE(IOUT,18)FQ,SPL(I,J),RJA(I,J),RJARV(I,J)
        350 CONTINUE
            WRITE(IOUT,19)
            DO 375 NOB=MBAND,IHBAND
            FQ=CENTF(NOB)/FAC
            WRITE(IOUT,20)FQ,MD(I,NOB),ZMDATA(I,NOB),ZNDATA(NOB,I)
        375 CONTINUE
        400 CONTINUE
         15 FORMAT(//46X,'SEA'/46X,'**************')
         16 FORMAT(//44X,'* SURFACE ',I3,' (SAVED ON TAPE ',I3,', SURFACE ',
           AI3,')')
         17 FORMAT(//15X,'FREQUENCY (HZ)     SPL',12X,'JA',10X,'JAREV'/
           A15X,'**************    *****    ******      ********')
         18 FORMAT(17X,E10.5,4X,E10.5,4X,E10.5,4X,E10.5)
         19 FORMAT(//15X,'FREQUENCY (HZ)',10X,' MD ',10X,'ZMDATA',
           &10X,'ZNDATA'/15X,'***************',8X,
           &'*******',8X,'********',8X,'********')
         20 FORMAT(15X,E10.5,10X,I5,10X,E10.5,10X,E10.5)
         21 FORMAT(5X,'DATA FOR SURFACE - ',I3,'  SAME AS FOR SURFACE - ',I3)
        111 RETURN
            END

FTN 213 IBANK 283 DBANK
```

ORIGINAL PAGE IS
OF POOR QUALITY

```
,S  XX.SEARES.XX.
:CR1A  12/14/83-18:39(6,)
              SUBROUTINE SEARES(NVOL,NV,PREF,NTOB,MBAND,IHBAND,ANSS,CENTF,
             &IOUT)

        C*
        C*
        C*  SEARES OUTPUTS THE FINAL RESULTS OF THE REQUESTED SEA ANALYSIS
        C*
              DIMENSION ANSS(NTOB,NV),CENTF(NTOB)
              FAC=6.283185
          100 WRITE(IOUT,1)
              DO 120 NVOL=1,NV
              TOT=0.0
              WRITE(IOUT,2) NVOL
              WRITE(IOUT,3) PREF
              DO 110 NOB=MBAND,IHBAND
              TOT= 10**(ANSS(NOB,NVOL)/20.0) +TOT
              WRITE(IOUT,5) CENTF(NOB)/FAC,ANSS(NOB,NVOL)
          110 CONTINUE
              TOT= 20.*ALOG10(TOT)
              WRITE(IOUT,7) TOT
          120 CONTINUE
        C*******************************************************************
            1 FORMAT(8(/),44X,'SPACE-AVERAGED,BAND-AVERAGED PRESSURE SQUARED'/
             *44X,'******************************************')
            2 FORMAT(///44X,'VOLUME - ',I3/44X,'************')
            3 FORMAT(80X,'PRESSURE'/43X,'CENTER FREQUENCY (HZ)',10X,'(DB,REF& ',
             AE11.5,')'/40X,'*********************',8X,
             A'********************')
            5 FORMAT(48X,E11.5,21X,E11.5)
            7 FORMAT(/,50X,'OVERALL',22X,E11.5)
        C****
         1111 RETURN
              END

FTN 107 IBANK 170 DBANK
```

```
!,S  XX.ALLOC,XX.
10R1A  12/14/83-18:40(0,)
C***********************************************************************
            SUBROUTINE ALLOC(X,ISZ)
C***********************************************************************
            ISZ= MCORF$(ISZ)-LOC(X)
            RETURN
            ENTRY IALLOC(IX,ISZ)
            ISZ=MCORF$(ISZ)-LOC(IX)
            RETURN
            ENTRY IFREE(MARK,IL)
            CALL LCORF$(IL+LOC(MARK))
            IL=0
            RETURN
            ENTRY FREE(ARK,IL)
            CALL LCORF$(IL+LOC(ARK))
            IL=0
            RETURN
            END

FTN 88 IBANK 50 DBANK
```

```
,S  XX.DALLOC,XX.
IOR1A  12/14/83-18:40(5,)
            SUBROUTINE DALLOC(D,IDIM)
            DOUBLE PRECISION D
            COMMON /STRG2$/INUMD,ISVDA(40),ISVDX(40)
            DATA INUMD/0/
            IA=MCORF$(IDIM*2+3)
            IDIM=(IA-LOC(D))/2+1
            IX=IDIM*2+LOC(D)
            IF(INUMD.GE.40) STOP 'DALLOC MAX'
            INUMD=INUMD+1
            ISVDA(INUMD)=IA
            ISVDX(INUMD)=IX
            RETURN
            END

            SUBROUTINE DFREE(D,IDIM)
            DOUBLE PRECISION D
            COMMON/STRG2$/INUMD,ISVDA(40),ISVDX(40)
            IX=IDIM*2+LOC(D)
            DO 10 I=1,INUMD
            IF(ISVDX(I).EQ.IX) THEN
            CALL LCORF$(ISVDA(I))
            IDIM=0
            INUMD=INUMD-1
            IF(I.EQ.INUMD+1)RETURN
            IF(INUMD.EQ.0)RETURN
            ISVDA(I)=ISVDA(INUMD+1)
            ISVDX(I)=ISVDX(INUMD+1)
            RETURN
            ENDIF
         10 CONTINUE
            STOP 'DFREE NO-FIND'
            END

FTN 121 IBANK 48 DBANK 81 COMMON
```

```
XX.REVERB,XX.
IA  12/14/83-18:40(2,)
      C*****************************************************************
            SUBROUTINE REVERB(WNMC,CN,ZNDATA,ZNDI,VMNPA,CENTF,NAM,NTOB,
           & LBAND,MBAND,NS,RO,CO,VOL,PI,NPROBN,DT,NFV,CZANN,L2,IOUT)
      C*
      C*         CALCULATE REVERBERATION TIME OF COMPLEX CAVITY WITH
      C*         NONUNIFORM SURFACE ABSORPTION
      C*
            DIMENSION WNMC(NAM),CN(NS,NAM),ZNDATA(NS,NTOB),ZNDI(NS,NTOB)
           &,VMNPA(NAM),CENTF(NAM)
            COMPLEX CZANN(NAM),PNT,ZA
            PRMS=CENTF(1)*PI
      C*        CALCULATE THE COMPLEX ACOUSTIC DAMPING
            IR=NFV+NPROBN
            READ(L2'IR,ERR=1111) CN
            DO 10 I=1,NAM
         10 CZANN(I)=(0.0,0.0)
            DO 50 ISUR=1,NS
            IF(ISV(ISUR).EQ.0)GOTO50
            DO 40 NOB=LBAND,MBAND
            ZA=CMPLX(ZNDATA(ISUR,NOB),ZNDI(ISUR,NOB))
            DO 40 I=1,NAM
            CZANN(I)=CN(ISUR,I)*AREA(ISUR)*RO*CO**2/VOL/VMNPA(I)/ZA/2.
           &/WNMC(I)+CZANN(I)
         40 CONTINUE
         50 CONTINUE
      C****     CALCULATE THE OVERALL REVERBERATION TIME ASSUMING EQUAL
      C****     POTENTIAL ENERGY IN EACH MODE AT T=0.0
            T=0.0
            PNT=(0.0,0.0)
            WRITE(IOUT,55)
         55 FORMAT(8(/),15X,'OVERALL REVERBERATION TIME'//10X,'TIME',16X
           &,'PRMS')
            PRMSI=(NAM*RO**2*CO**4)**0.5
         60 CONTINUE
            DO 70 NWN=1,NAM
            T=T+DT
            PNT=(CEXP(-CZANN(NWN)*WNMC(NWN)*T)*COS(WNMC(NWN)*T)
           & +CZANN(NWN)*SIN(WNMC(NWN)*T))+PNT
            PNT=PNT*CONJG(PNT)
            PN=REAL(PNT)+PN
            IF(NWN.EQ.1)PN=1.0
         70 CONTINUE
            PRMS=RO*CO**2*PN**0.5
            PRMS=PRMS/PRMSI
            WRITE(IOUT,75)T,PRMS
         75 FORMAT(10X,F10.5,10X,F10.5)
            IF(PRMS.GT.0.0011) GOTO 60
       1111 RETURN
            END

383 IBANK 153 DBANK
```

```
MCETITLEIN3-5*XX(1).DEL
        1        @FREE L0.
        2        @FREE L1.
        3        @FREE L2.
        4        @FREE L3.
        5        @FREE L4.
        6        @FREE L5.
        7        @FREE L6.
        8        @FREE L7.
        9        @FREE L8.
       10        @FREE L9.
       11        @FREE L10.
       12        @FREE L11.
       13        @FREE L12.
       14        @FREE L13.
       15        @FREE L14.
       16        @FREE L15.
       17        @FREE L16.
       18        @FREE L17.
       19        @DELETE,C L0.
       20        @DELETE,C L1.
       21        @DELETE,C L2.
       22        @DELETE,C L3.
       23        @DELETE,C L4.
       24        @DELETE,C L5.
       25        @DELETE,C L6.
       26        @DELETE,C L7.
       27        @DELETE,C L8.
       28        @DELETE,C L9.
       29        @DELETE,C L10.
       30        @DELETE,C L11.
       31        @DELETE,C L12.
       32        @DELETE,C L13.
       33        @DELETE,C L14.
       34        @DELETE,C L15.
       35        @DELETE,C L16.
       36        @DELETE,C L17.

@PRT,S XX.TAPIN
```

ORIGINAL PAGE IS
OF POOR QUALITY

```
MPETIT@IN3_8*XX(1).TAPIN
        @ASG.TF TAPEIN..T,10000
        @COPY,G TAPEIN.,L0.
        @COPY,G TAPEIN.,L1
        @COPY,G TAPEIN.,L2.
        @COPY,G TAPEIN.,L3.
        @COPY,G TAPEIN.,L4.
        @COPY,G TAPEIN.,L5.
        @COPY,G TAPEIN.,L6.
        @COPY,G TAPEIN.,L7.
        @COPY,G TAPEIN.,L8.
        @COPY,G TAPEIN.,L9.
        @COPY,G TAPEIN.,L10.
        @COPY,G TAPEIN.,L12.
        @COPY,G TAPEIN.,L13.
        @COPY,G TAPEIN.,L14.
        @COPY,G TAPEIN.,L15.
        @COPY,G TAPEIN.,L16.
        @COPY,G TAPEIN.,L17.
        @FREE TAPEIN.

@PRT,S XX.SOURCE
```

```
PETITBIN3_8*XX(1).SOURCE
          @FTN.S   XX.MAIN.XX.
          @FTN,S   XX.DATALD.XX.
          @FTN.S   XX.FEDAT.XX.
          @FTN,S   XX.FRQCAL,XX.
          @FTN.S   XX.BNDCAL,XX.
          @FTN.S   XX.MULCV.XX.
          @FTN.S   XX.VPNMC.XX.
          @FTN,S   XX.PRMCAL,XX.
          @FTN.S   XX.MDLPRM,XX.
          @FTN.S   XX.CALC,XX.
          @FTN.S   XX.DFCALC,XX.
          @FTN.S   XX.HFREQ.XX.
          @FTN.S   XX.SEAPRM,XX.
          @FTN.S   XX.SEARES,XX.
          @FTN,S   XX.ALLOC.XX.
          @FTN.S   XX.DALLOC.XX.
          @FTN,S XX.REVERB.XX.
          @PACK XX.
          @PREP TPFS
          @MAP.S   XX.NAM,XX.PPO
          @XQT XX.PPO
          @ADD.P XX.DATA

@PRT,S XX.SOURC2
```

```
MPETITBIN3C3*XX(1).SOURC2
       1        @XQT XX.PRO
       2        @ADD.P XX.DATA

@PRT,S XX.NAM
```

```
MPETITBIN308*XY(1).NAM
        LIB XX.
        LIB SYS$*SFC$
        SEG MAIN$
              IN XX.MAIN
              IN XX.ALLOC
              IN XX.DALLOC
              IN BLANK$COMMON
              TYPE COMSEG
        SEG A*
              IN XX.DATALD
              IN XX.FEDAT
        SEG B*,A
              IN XX.FRQCAL
        SEG C*,A
              IN XX.BNDCAL
        SEG D*,A
              IN XX.PRMCAL
        SEG E*,A
              IN XX.MULCV
        SEG F*,A
              IN XX.VPNMC
        SEG G*,A
              IN XX.CALC
        SEG H*,A
              IN XX.DFCALC
        SEG I*,A
              IN XX.HFREQ
        SEG J*,A
              IN XX.MDLPRM
              IN XX.SEAPRM
              IN XX.SEARES
              IN XX.REVERB
```

```
MPETITBIN3C6*XX(1).NAM
        LIB XX.
        LIB SYS$*uSFC$
        SEG MAIN$
              IN XX.MAIN
              IN XX.ALLOC
              IN XX.CALLOC
              IN BLANK$COMMON
              TYPE COMSEG
        SEG A*
              IN XX.DATALD
              IN XX.FEDAT
        SEG B*,A
              IN XX.FRQCAL
        SEG C*,A
              IN XX.BNDCAL
        SEG D*,A
              IN XX.PRMCAL
        SEG E*,A
              IN XX.MULCV
        SEG F*,A
              IN XX.VPNMC
        SEG G*,A
              IN XX.CALC
        SEG H*,A
              IN XX.DFCALC
        SEG I*,A
              IN XX.HFREQ
        SEG J*,A
              IN XX.MDLPRM
              IN XX.SEAPRM
              IN XX.SEARES
              IN XX.REVERB
```

ORIGINAL PAGE IS
OF POOR QUALITY

```
MPETIT3IN3C8*XX(1).TAPOT
        @ASG,TF TAPEOT.,T,SAVE04
        @COPY,G L0.,TAPEOT.
        @COPY,G L1.,TAPEOT.
        @COPY,G L2.,TAPEOT.
        @COPY,G L3.,TAPEOT.
        @COPY,G L4.,TAPEOT.
        @COPY,G L5.,TAPEOT.
        @COPY,G L6.,TAPEOT.
        @COPY,G L7.,TAPEOT.
        @COPY,G L8.,TAPEOT.
        @COPY,G L9.,TAPEOT.
        @COPY,G L10.,TAPEOT.
        @COPY,G L11.,TAPEOT.
        @COPY,G L13.,TAPEOT.
        @COPY,G L14.,TAPEOT.
        @COPY,G L15.,TAPEOT.
        @COPY,G L16.,TAPEOT.
        @COPY,G L17.,TAPEOT.
        @FREE TAPEOT.

@BRKPT PRINT$
```

ORIGINAL PAGE IS
OF POOR QUALITY

```
MPETITTBIN308*XX(1).DATA1
       1       MULTIPLE CAVITY CHECK CASE
       2       MARK PETTITT
       3       1     A.OPTION SELECTION
       4       0
       5       1,0,0,1
       6       0,0,0,0
       7       1,1,0,0
       8       1     B.NEW DATA FILE SIZING PARAMETERS
       9       3,5,4,20,2,5,4,5,60,20,0,0,60,4
      10       1     C.RANGE: FREQUENCY DOMAIN
      11       1,16,16,0.12
      12       0     D.RANGE: DESCRETE FREQUENCIES
      13       1     E.TOLERANCES
      14       0.001,0.01
      15       1     F.MATRIX SIZING
      16       13,4,2,2,0,3,15,5,2,4,60,20,0,0,0,0,4
      17       1     G.MULTIPLE CAVITY PARAMETERS
      18       60,1,10,10,60,0.02,5,0.01
      19       1     H.OPENING/VOLUME RELATIONSHIPS
      20       1,1,2
      21       1     I.OPENING DESCRIPTION
      22       1,1,11.09,8,9,6
      23       1     J.STRUCTURAL DATA FILE ACCESS AND STORAGE
      24       0,0
      25       1,2
      26       1     K.GLOBAL NODE POINTS
      27       1,  9.29,0.0,0.0
      28       2,  9.29,0.0,5.04
      29       3,  9.29,4.41,0.0
      30       4,  0.0,4.41,0.0
      31       5,  0.0,4.41,5.04
      32       6,  4.645,4.41,0.0
      33       7,  4.645,4.41,5.04
      34       8,  4.645,2.2,0.0
      35       9,  4.645,2.2,5.04
      36       10, 0.0,0.0,0.0
      37       11, 4.645,0.0,0.0
      38       12, 0.0,0.0,5.04
      39       13, 4.645,0.0,5.04
      40       1     L.SURFACE DESCRIPTION
      41       1,  1,22.23,1,2,3
      42       2,  1,46.92,4,5,3
      43       3,  1,23.41,4,5,6
      44       4,  1,23.41,6,7,3
      45       1     M.MASTER SURFACE / SURFACE RELATIONS
      46       1, 0,0
      47       2, 3,4
      48       0     N.STRUCTURAL CONSTANTS
      49       0     O.STRUCTRUAL MODAL DATA
      50       0     P.STRUCTURAL CONSTANTS : SEA
      51       1     Q.VOLUME DESCRIPTION
      52       1,  1,103.24,10,11,4,12
      53       2,  1,103.24,11,1,6,13
      54       1     R.ACOUSTIC CONSTANTS
      55       4.428E-5,13200.0,3.0E-08
      56       0     S.ACOUSTIC MODAL DATA
```

```
   57       1      T.SURFACE /VOLUME RELATIONSHIPS
   58       1,2
   59       2,0
   60       3,1
   61       4,2
   62       0      U.SURFACE ABSORPTION
   63       0      V.STRUCTURAL DAMPING
   64       0      W.EXTERNAL SOUND PRESSURE LEVEL
   65       0      X.EXTERNAL PRESSURE FIELD DESCRIPTION
   66       1      Y.BAND CENTER FREQUENCIES
   67       200.,250.,315.,400.,500.,630.,800.,
   68       1000.,1250.,1600.,2000.,2500.,3150.,4000.,5000.,6300.,8000.,10000.,12500.,16000.
   69       0      Z.REVERBERATION TIME

@PRT,S XX.DATA1A
```

ORIGINAL PAGE IS
OF POOR QUALITY

```
MPETITBIN308*XX(1).DATAIA
          MULTIPLE CAVITY CHECK CASE : 3 CAVITIES
          MARK PETTITT
          1     A.OPTION SELECTION
          5
          0,0,0,1
          0,0,0,0
          0,1,0,0
          1     B.NEW DATA FILE SIZING PARAMETERS
          3,5,4,20,3,5,4,5,50,20,0,0,50,4
          1     C.RANGE: FREQUENCY DOMAIN
          1,16,16,0.12
          0     D.RANGE: DESCRETE FREQUENCIES
          1     E.TOLERANCES
          0.001,0.01
          1     F.MATRIX SIZING
          14,4,2,2,0,3,15,5,3,4,50,20,0,0,0,0,4
          1     G.MULTIPLE CAVITY PARAMETERS
          50,2,10,10,49,0.02,10,0.01
          1     H.OPENING/VOLUME RELATIONSHIPS
          1,1,2
          2,2,3
          1     I.OPENING DESCRIPTION
          1,1,20.89,3,12,11
          2,1,11.09,7,13,14
          1     J.STRUCTURAL DATA FILE ACCESS AND STORAGE
          0,0
          1,2
          1     K.GLOBAL NODE POINTS
          1,0.,0.,0.
          2,4.145,0.,0.
          3,0.,2.2,0.
          4,0.,0.,5.04
          5,5.145,0.,0.
          6,9.29,0.,0.
          7,5.145,2.2,0.
          8,5.145,0.,5.04
          9,9.29,2.2,0.
          10,0.,4.41,0.
          11,0.,2.2,5.04
          12,4.145,2.2,0.
          13,5.145,2.2,5.04
          14,5.145,4.41,0.
          1     L.SURFACE DESCRIPTION
          1,  1,22.23,1,2,3
          2,  1,46.92,4,5,3
          3,  1,23.41,4,5,6
          4,  1,23.41,6,7,3
          1     M.MASTER SURFACE / SURFACE RELATIONS
          1, 0,0
          2, 3,4
          0     N.STRUCTURAL CONSTANTS
          0     O.STRUCTRUAL MODAL DATA
          0     P.STRUCTURAL CONSTANTS : SEA
          1     Q.VOLUME DESCRIPTION
          1,1,45.96,1,2,3,4
          2,1,57.05,3,7,10,11
```

```
 57      3,1,91.92,5,6,14,8
 58      1     R.ACOUSTIC CONSTANTS
 59      4.428E-5,13200.0,3.0E-08
 60      0     S.ACOUSTIC MODAL DATA
 61      1     T.SURFACE /VOLUME RELATIONSHIPS
 62      1,2
 63      2,0
 64      3,1
 65      4,2
 66      0     U.SUPFACE ABSORPTION
 67      0     V.STRUCTURAL DAMPING
 68      0     W.EXTERNAL SCUND PRESSURE LEVEL
 69      0     X.EXTERNAL PRESSURE FIELD DESCRIPTION
 70      1     Y.BAND CENTER FREQUENCIES
 71      200.,250.,315.,400.,500.,630.,800.,
 72      1000.,1250.,1600.,2000.,2500.,3150.,4000.,5000.,6300.,8000.,10000.,12500.,16000.
 73      0     Z.REVERBERATION TIME

@PRT,S XX.DATA2
```

```
MPETITBIN308*XX(1).DATA2
      1        MARK PETTITT
      2        MODAL ANALYSIS TEST CASE
      3        1 A.
      4        1
      5        1,0,1,1
      6        1,0,1,1
      7        1,1,0,0
      8        1 B.
      9        2,4,4,20,2,6,5,6,40,25,0,0,15,0
     10        1 C.
     11        1,15,15,0.12
     12        0 D.
     13        1 E.
     14        0.001,0.02
     15        1 F.
     16        8,6,1,1,5,6,25,6,1,4,40,15,0,0,0,0,1
     17        0 G.
     18        0 H.
     19        0 I.
     20        1 J.
     21        0
     22        1
     23        1 K.
     24        1, 0.,0.,0.
     25        2, 15.35,0.,0.
     26        3, 15.35,0.,12.21
     27        4, 0.0,0.0,12.21
     28        5, 0.,18.11,0.
     29        6, 15.35,18.11,0.
     30        7, 15.35,18.11,12.21
     31        8, 0.0,18.11,12.21
     32        1 L.
     33        1,8,187.42,5,6,8,5,6,8
     34        2,8,277.99,1,2,5,1,2,5
     35        3,8,221.21,2,3,6,2,3,6
     36        4,8,277.99,4,3,8,4,3,8
     37        5,8,221.21,1,4,5,1,4,5
     38        6,8,187.42,1,2,4,1,2,4
     39        1 M.
     40        1,1
     41        1 N.
     42        1,238.,238.,79.,0.33,0.33,1.6304E-5
     43        0 O.
     44        0 P.
     45        1 Q.
     46        1,1,3422.0,1,2,5,4
     47        1 R.
     48        .11468E-6,13200.,3.0E-9
     49        0 S.
     50        1 T.
     51        1,1
     52        2,1
     53        3,1
     54        4,1
     55        5,1
     56        6,1
```

```
1 U.
1,1
.005,.005,.005,.005,.005,.005,.005,.005,.005,.005,.005,.005,.005,
.005,.005
2,0
3,0
4,0
5,0
6,0
1 V.
1,1
.01,.01,.01,.01,.01,.01,.01,.01,.01,.01,.01,.01,.01,.01,.01,
1 W.
1,1
117.6,118.6,119.6,120.6,121.6,122.6,123.6,124.6,125.6,126.6,127.6,128.6,129.6,
130.6,131.6
1 X.
1,3
1.5708
1 Y.
40.,50.,63.,80.,100.,125.,160.,200.,250.,315.,400.,500.,630.,800.,1000.
0 Z.

@PRT,S XX.DATA3
```

```
MPETITBIN308*YX(1).DATA*
      1       MARK PETTITT
      2         SEA TEST CASE : OIL DRUM
      3       1 A.
      4       1
      5       0,0,0,1
      6       0,0,0,0
      7       0,1,0,0
      8       1 B.
      9       2,4,4,20,2,5,5,5,15,15,0,0,15,4
     10       1 C.
     11       3,3,20,0.125
     12       0 D.
     13       1 E.
     14       0.0001,0.02
     15       1 F.
     16       6,1,1,1,0,5,0,0,1,4,0,20,0,0,0,3,1
     17       0 G.
     18       0 H.
     19       0 I.
     20       1 J.
     21       0,1,0
     22       1,1,2
     23       1 K.
     24       1,0.,0.,0.
     25       2,11.,0.,0.
     26       3,0.,11.,0.
     27       4,0.,0.,33.
     28       5,11.,0.,33.
     29       6,0.,11.,33.
     30       1 L.
     31       1,0,2280.8,0,0,0,0,0
     32       1 M.
     33       1,1
     34       0 N.
     35       0 O.
     36       1 P.
     37       1,2
     38       1,11.0,0.0,0.0
     39       2,33.0,0.0,0.0
     40       3,0.04,0.0,0.0
     41       4,6.706E-2,0.0,0.0
     42       5,73042.0,0.0,0.0
     43       6,202030.,0.,0.
     44       7,-1.0,0.0,0.0
     45       1 Q.
     46       1,2,12544.0,1,2,3,4
     47       1 R.
     48       .11468E-6,13200.0,3.0E-8
     49       0 S.
     50       1 T.
     51       1,1
     52       1 U.
     53       1,1
     54       .0067,.0067,.0084,.0105,.0132,.0167,.0209,.0264,.0335,.0419,.0523,.0670,
     55       .0837,.1047,.1319,.1675,.2093,.2637,.3349,.4186
     56       1 V.
```

```
     57        1,1
     58        .01,.01,.01,.01,.01,.01,.01,.01,.01,.01,.01,.01,.01,.01,.01,.01,.01,.01,.01,.01
     59        1 W.
     60        1,1
     61        100.,100.,100.,100.,100.,100.,100.,100.,100.,100.,100.,100.,100.,100.,
     62        100.,100.,100.,100.,100.,100.
     63        1 X.
     64        1,1
     65        0.0
     66        1 Y.
     67        125.,160.,200.,250.,315.,400.,500.,630.,800.,1000.,1250.,1600.,2000.,2500.,
     68        3150.,4000.,5000.,6300.,8000.,10000.
     69        0 Z.

@PRT,S XX.DATA11
```

ORIGINAL PAGE IS
OF POOR QUALITY

```
MPETITBIN308*X(1).DATA11
     1          MARK PETTITT
     2            ON TEST CASE : OFFSET PARTITION
     3          1 A.
     4          3
     5          1,0,0,0
     6          0,0,0,0
     7          0,1,0,0
     8          1 B.
     9          2,2,4,20,2,2,5,6,30,16,0,0,30,0
    10          1 C.
    11          1,15,15,0.120
    12          0 D.
    13          1 E.
    14          .1E-3,.2E-1
    15          1 F.
    16          10,1,1,1,0,6,0,0,2,4,30,15,0,0,0,0,4
    17          1 G.
    18          30,1,5,5,30,.02,10,0.01
    19          1 H.
    20          1,1,2
    21          1 I.
    22          1,1,22.23,2,6,7,0,0,0
    23          1 J.
    24          0
    25          1
    26          1 K.
    27          1,0.,0.,0.
    28          2,3.,0.,0.
    29          3,0.,0.,5.04
    30          4,0.,4.41,0.
    31          5,9.3,0.,0.
    32          6,3.,0.,5.04
    33          7,3.,4.41,0.
    34          8,3.,.25,.25
    35          9,3.,.25,4.79
    36          10,3.,4.16,0.25
    37          1 L.
    38          1,2,22.23,1,3,4,1,3,4
    39          1 M.
    40          1,1
    41          0 N.
    42          0 O.
    43          0 P.
    44          1 Q.
    45          1,1,66.68,1,2,4,3
    46          2,1,140.05,2,5,7,6
    47          1 R.
    48          .11468E-6,13200.,.3E-9
    49          0 S.
    50          1 T.
    51          1,1
    52          1 U.
    53          1,1
    54          .05,.05,.05,.05,.05,.05,.05,.05,.05,.05,.05,.05,.05,.05,.05
    55          0 V.
    56          0 W.
```

```
     57        0 X.
     58        1 Y.
     59        100.,125.,160.,200.,250.,315.,400.,500.,630.,800.,1000.,1250.,1600.,
     60        2000.,2500.
     61        0 Z.

 @PRT,S XX.DATA20
```

ORIGINAL PAGE IS
OF POOR QUALITY

```
MPETITBIN308*XX(1).DATA20
         MARK PETTITT
         SPACE SHUTTLE EMPTY PAYLOAD BAY-OV101 JET TEST (LOW FREQ)
         1 A.
         1
         0,0,0,0
         0,0,0,0
         0,1,0,0
         1 B.
         2,6,4,20,2,6,6,6,50,50,1,9,0,3
         1 C.
         1,8,0,0.125
         0 D.
         1 E.
         0.001,0.01
         1 F.
         16,5,5,1,0,6,50,6,1,5,10,8,0,1,9,0,4
         0 G.
         0 H.
         0 I.
         1 J.
         0,0,0,3,0
         1,2,3,3,4
         1 K.
         1,582.0,-105.0,275.0
         2,1302.0,-105.0,275.0
         3,582.0,105.0,275.0
         4,582.0,-105.0,419.0
         5,1302.0,-105.0,419.0
         6,582.0,105.0,419.0
         7,1302.0,105.0,275.0
         8,582.0,-105.0,474.0
         9,582.,0.,275.
         10,1302.,0.,275.
         11,582.,-105.,327.
         12,1302.,-105.,327.
         13,582.,105.,327.
         14,1302.,105.,327.
         15,582.,0.,419.
         16,1302.,0.,419.
         1 L.
         1,7,218880.,15,16,6,4,5,6
         2,7,151200.,9,10,3,1,2,3
         3,7,103680.,11,12,4,1,2,4
         4,7,103680.,13,14,6,3,7,6
         5,2,46977.,2,7,5,2,7,5
         1 M.
         1,1
         2,2
         3,3
         4,4
         5,5
         1 N.
         1,50.,127.,0.,0.,0.,0.
         7.4,1.,1.,1.3,1.,540.,178.8,180.,62.6
         8.9,2.,1.,1.1,.99,550.,173.4,170.,65.3
         10.1,3.,1.,1.2,.61,660.,165.,50.,69.5
```

ORIGINAL PAGE IS
OF POOR QUALITY

```
 57     10.4,3.,1.,10.4,1.,.56,660.,159.6,50.,72.2
 58     12.2,1.,2.,2.,1.,660.,241.,0.,31.2
 59     13.2,1.,2.,2.4,1.,600.,241.7,70.,31.2
 60     16.5,1.,2.,1.8,1.,520.,241.7,200.,31.2
 61     17.1,2.,1.,1.4,.87,380.,146.,0.,79.
 62     17.2,2.,1.,.9,.76,350.,157.,0.,73.5
 63     17.4,3.,1.,.9,.59,495.,157.,0.,73.5
 64     18.7,4.,1.,1.3,.8,660.,144.6,60.,79.7
 65     19.7,3.,1.,.9,.87,534.,137.,186.,83.1
 66     20.7,2.,2.,1.4,.96,720.,241.7,0.,31.2
 67     21.4,2.,2.,2.1,.94,560.,241.7,0.,31.2
 68     22.4,5.,1.,.8,.81,650.,146.,70.,79.
 69     23.8,2.,2.,1.5,.76,620.,241.7,0.,31.2
 70     24.5,1.,2.,2.2,1.,340.,241.7,370.,31.2
 71     27.,6.,1.,1.2,.77,672.,137.8,48.,83.1
 72     27.3,6.,1.,1.,.87,660.,146.,60.,79.
 73     27.8,3.,2.,1.1,.95,660.,241.7,0.,31.2
 74     29.1,2.,2.,1.8,.89,370.,241.7,350.,31.2
 75     33.4,7.,1.,2.,.96,658.,151.4,62.,76.3
 76     33.8,7.,1.,.6,.71,658.,137.8,62.,83.1
 77     34.7,3.,2.,2.3,.95,510.,241.7,0.,31.2
 78     35.5,3.,2.,1.9,.88,495.,241.7,0.,31.2
 79     37.4,4.,2.,1.4,.84,720.,241.7,0.,31.2
 80     38.8,3.,3.,2.8,.94,480.,241.7,140.,31.2
 81     40.3,5.,2.,1.6,.99,680.,241.7,0.,31.2
 82     40.6,8.,1.,.9,.88,658.0,144.6,32.0,79.7
 83     43.5,5.,2.,1.9,.84,720.,241.7,0.,31.2
 84     44.8,6.,2.,1.1,.75,700.,200.8,0.,51.6
 85     46.4,5.,2.,2.1,.84,540.,200.8,0.,51.6
 86     46.8,9.,1.,.9,.81,655.,144.,50.,80.
 87     47.1,4.,2.,1.2,.87,410.,228.,0.,38.
 88     47.9,3.,2.,1.1,.79,330.,208.,275.,48.
 89     48.8,7.,2.,2.4,.78,683.,228.,0.,38.
 90     49.3,5.,2.,1.6,.76,500.,200.8,0.,51.6
 91     49.7,5.,2.,1.5,.73,450.,200.8,0.,51.6
 92     50.3,5.,2.,1.2,.93,430.,200.8,0.,51.6
 93     51.0,8.,2.,1.2,.59,680.,200.8,0.,51.6
 94     51.4,4.,2.,.9,.71,400.,200.,240.,52.
 95     52.2,1.,2.,1.,.93,310.,200.8,225.0,51.6
 96     53.2,4.,3.,2.4,.66,540.,228.,40.,38.
 97     54.2,8.,4.,1.1,.53,620.,304.,0.,0.
 98     54.2,6.,2.,1.2,.95,500.,200.8,200.,51.6
 99     55.0,1.,4.,1.2,.87,295.,304.,55.,0.
100     55.,10.,3.,2.5,.83,700.,236.,25.,34.
101     55.5,5.,2.,1.4,.88,370.,200.8,205.0,51.6
102     55.8,10.,1.,.9,.92,700.,173.4,25.,65.3
103     56.9,7.,1.,.9,.79,500.,200.,115.,52.
104     2,45.,-1.0,0.,0.,0.,0.
105     9.6,1.,1.,5.4,1.,518.,210.,207.,0.
106     11.5,2.,1.,7.3,.9,609.,210.,116.,0.
107     18.3,1.,1.,7.5,1.,508.,210.,217.,0.
108     18.5,1.,1.,4.7,1.,458.,210.,267.,0.
109     19.5,2.,1.,4.1,.74,667.,210.,58.,0.
110     20.7,2.,1.,4.6,.93,667.,210.,58.,0.
111     22.9,2.,1.,4.7,.64,398.,201.,327.,4.5
112     23.1,2.,1.,23.1,5.4,.93,458.,204.,267.,3.
113     24.,3.,1.,3.5,.78,683.0,205.,116.,2.5
```

ORIGINAL PAGE IS
OF POOR QUALITY

```
114     25.4,2.,1.,9.,.77,408.,210.,317.,0.
115     27.1,3.,1.,2.8,.67,483.,197.,242.,6.5
116     29.7,3.,1.,4.1,.87,498.,195.,227.,7.5
117     30.9,4.,1.,3.1,.74,609.,194.,116.,6.
118     33.,2.,1.,2.8,1.,171.,171.,167.,19.5
119     35.5,3.,1.,1.6,.81,428.,171.,297.,19.5
120     36.8,1.,1.,2.1,.85,334.,199.,166.,5.5
121     38.2,4.,1.,1.3,.88,398.,168.,327.,21.
122     38.5,2.,1.,1.8,.84,254.,173.,388.,18.5
123     39.3,3.,1.,1.1,.72,283.,185.,217.,12.5
124     42.3,4.,1.,1.3,.69,255.,169.,20.5,417.
125     43.2,1.,1.,.9,1.,141.,163.,444.,23.5
126     44.2,2.,1.,.9,.73,161.,189.,169.,10.5
127     45.5,2.,1.,2.1,.9,230.,165.,337.,22.5
128     46.4,1.,1.,1.1,1.,111.,172.,167.,19.
129     53.2,2.,1.,2.1,.98,357.,180.,0.,15.
130     55.4,1.,1.,1.5,1.,156.,153.,0.,26.5
131     56.6,2.,1.,2.3,.93,190.,163.,92.,21.
132     57.9,1.,1.,1.7,1.,227.,145.,472.0,32.5
133     63.6,1.,1.,1.8,1.,62.,210.,139.,0.
134     64.5,2.,1.,2.6,1.,160.,210.,47.,0.
135     71.9,1.,1.,1.6,1.,101.,180.,116.,15.
136     75.2,1.1,1.1,3.3,1.,101.,166.,116.,22.
137     75.9,1.,1.,1.4,1.,101.,174.,116.,16.
138     77.4,1.,3.,2.5,.85,211.,210.,177.,0.
139     78.5,1.,1.,1.5,1.,112.,130.,388.,40.
140     80.,3.,1.,1.3,-.31,278.,210.,116.,0.
141     80.7,3.,1.,1.5,.47,117.,210.,337.,0.
142     81.1,3.,1.,1.3,.35,300.,210.,116.,0.
143     81.8,3.,1.,1.9,.39,448.,210.,166.,0.
144     82.8,3.,1.,1.4..43,211.,210.,166.,0.
145     84.2,3.,1.,1.,-.45,102.,210.,507.,0.
146     85.1,3.,1.,2.,.4,160.,210.,217.,0.
147     85.8,3.,1.,2.6,.39,204,210.,397.,0.
148     86.9,2.,1.,1.2,.81,166.,145.,0.,32.5
149     87.9,2.,1.,1.4,.88,166.,145.,0.,32.5
150     3,36.,-1.0,0.,0.,0.,0.
151     7.4,1.,1.,3.7,1.0,500.,104.,190.,0.
152     16.5,1.,1.,2.5,1.0,440.,108.,275.,0.
153     19.2,2.,1.,3.,.99,650.,104.,75.,0.
154     21.4,2.,1.,3.3,.95,505.,100.,220.,0.
155     23.4,3.,1.,4.,.94,570.,100.,75.,0.
156     23.8,3.,1.,2.4,.75,645.,102.,80.,0.
157     29.1,4.,1.,2.5,.9,680.,110.,45.,0.
158     38.8,5.,1.,3.2,.88,700.,74.,25.,0.
159     43.5,6.,1.,2.5,.76,660.,110.,65.,0.
160     44.3,6.,1.,3.1,.93,660.,90.,65.,20.
161     45.9,1.,2.,3.2,1.,265.,118.,460.,0.
162     46.4,2.,1.,2.,.73,375.,80.,350.,40.
163     46.5,2.,1.,2.9,1.,215.,115.,510.,0.
164     47.1,3.,1.,2.4,.93,240.,85.,485.,30.
165     47.9,4.,1.,2.,.82,360.,90.,290.,25.
166     48.8,5.,1.,1.5,.67,300.,78.,395.,32.
167     52.1,3.,1.,1.5,.81,216.,80.,375.,30.
168     53.3,3.,1.,2.4,.95,255.,75.,255.,30.
169     56.2,6.,1.,3.3,.83,546.,65.,20.,40.
170     59.9,4.,1.,2.9,.57,550.,70.,175.,30.
```

```
171   61.4,3.,1.,2.5,.93,220.,80.,205.,20.
172   74.3,4.,1.,3.4,.74,400.,70.,325.,40.
173   74.6,7.,2.,2.4,.75,660.,105.,65.,0.
174   75.4,5.,1.,1.9,.66,400.,75.,0.,35.
175   76.8,3.,1.,2.3,.74,225.,120.,0.,0.
176   77.3,4.,1.,2.3,.73,320.,85.,0.,20.
177   78.9,1.,1.,2.1,1.,120.,95.,50.,25.
178   79.7,1.,2.,2.,.9,225.,100.,500.,0.
179   81.,3.,2.,3.1,.99,405.,111.,40.,0.
180   82.9,1.,2.,2.5,1.,225.,105.,425.,0.
181   83.4,4.,1.,2.7,.84,240.,80.,60.,35.
182   83.5,4.,1.,1.5,.75,230.,80.,60.,35.
183   84.8,3.,1.,4.,.84,255.,75.,60.,25.
184   85.2,2.,1.,2.2,.79,150.,65.,165.,40.
185   87.9,3.,1.,2.2,.74,190.,73.,65.,32.
186   89.4,1.,1.,2.5,1.,125.,80.,25.,40.
187   4
188   5,120000.,446000.,2632.0,0.33,0.33,0.0212
189   0 O.
190   0 P.
191   1 Q.
192   1,4,27851904.0,1,2,3,4,8
193   1 R.
194   .11468E-6,13200.,0.3E-8
195   0 S.
196   1 T.
197   1,1
198   2,1
199   3,1
200   4,1
201   5,1
202   1 U.
203   1,1
204   0.05,0.05,0.05,0.05,0.05,0.05,0.05,0.05
205   2,1
206   0.05,0.05,0.05,0.05,0.05,0.05,0.05,0.05
207   3,1
208   0.05,0.05,0.05,0.05,0.05,0.05,0.05,0.05
209   4,1
210   0.05,0.05,0.05,0.05,0.05,0.05,0.05,0.05
211   5,1
212   0.05,0.05,0.05,0.05,0.05,0.05,0.05,0.05
213   1 V.
214   1,1
215   0.032,0.025,0.02,0.016,0.0125,0.010,0.008,.00625
216   2,1
217   0.064,0.05,0.04,0.032,0.025,0.020,0.016,.0125
218   3,1
219   0.064,0.05,0.04,0.032,0.025,0.020,0.016,.0125
220   4,1
221   0.064,0.05,0.04,0.032,0.025,0.020,0.016,.0125
222   5,1
223   0.064,0.05,0.04,0.032,0.025,0.020,0.016,.0125
224   1 W.EXTERIOR SPL
225   1,1
226   98.,102.,105.,110.,112.,115.,115.,114.
227   2,1
```

```
 228      102.,108.,110.,112.,114.,118.,122.,125.
 229      3,1
 230      100.,102.,108.,110.,115.,118.,120.,122.
 231      4,1
 232      100.,102.,108.,110.,115.,118.,120.,122.
 233      5,1
 234      100.,102.,108.,110.,115.,118.,120.,122.
 235      1 X.
 236      1,2
 237      0.0258,0.93,0.05,0.27
 238      2,2
 239      0.0258,0.93,0.05,0.27
 240      3,2
 241      0.0258,0.93,0.05,0.27
 242      4,2
 243      0.0258,0.93,0.05,0.27
 244      5,1
 245      1.,1.,1.,1.
 246      1 Y.
 247      31.5,40.,50.,63.,80.,100.,125.,160.
 248      0 Z.

@PRT,S XX.DATA21
```

```
MPETITBIN308*XX(1).DATA21
     1        MARK PETTITT
     2        SPACE SHUTTLE :EMPTY PAYLOAD BAY,OV102 JET TEST(HIGH FREQ)
     3        1 A.
     4        1
     5        0,1,0,0
     6        0,0,0,0
     7        0,1,0,0
     8        1  B.
     9        2,6,4,20,2,45,6,6,0,0,0,0,0,3
    10        1  C.
    11        3,3,20,0.125
    12        0  D.
    13        1  E.
    14        0.001,0.01
    15        1  F.
    16        0,41,41,1,1,0,0,0,1,1,0,20,0,0,0,3,4
    17        0  G.
    18        0  H.
    19        0  I.
    20        1  J.
    21        0,0,2,2,2,2,2,2,2,2,2,2,0,6,0,3,3,3,3,3,3,3,0,4,4,4,4,3,3,3,3,3,3,3,3,
    22        4,4,4,4,1,0
    23        1,2,2,2,2,2,2,2,2,2,2,2,6,6,3,3,3,3,3,3,3,3,4,4,4,4,4,3,3,3,3,3,3,3,3,
    24        4,4,4,4,1,5
    25        0  K.
    26        1  L.
    27        1,0,109440.,0
    28        2,0,11634.0,0
    29        3,0,11634.,0
    30        4,0,11634.,0
    31        5,0,11634.,0
    32        6,0,11634.,0
    33        7,0,11634.,0
    34        8,0,11634.,0
    35        9,0,11634.,0
    36        10,0,11634.,0
    37        11,0,11634.,0
    38        12,0,11634.,0
    39        13,0,12180.,0
    40        14,0,12180.,0
    41        15,0,4927.8,0
    42        16,0,4927.8,0
    43        17,0,4927.8,0
    44        18,0,4927.8,0
    45        19,0,4927.8,0
    46        20,0,4927.8,0
    47        21,0,4927.8,0
    48        22,0,4927.8,0
    49        23,0,5073.0,0
    50        24,0,5073.,0
    51        25,0,5073.,0
    52        26,0,5073.,0
    53        27,0,5073.,0
    54        28,0,4927.8,0
    55        29,0,4927.8,0
    56        30,0,4927.8,0
```

```
31,0,4927.8,0
32,0,4927.8,0
33,0,4927.8,0
34,0,4927.8,0
35,0,4927.8,0
36,0,5073.0,0
37,0,5073.,0
38,0,5073.,0
39,0,5073.,0
40,0,109440.,0
41,0,46977.0,0
1  M.
1,1
2,2
3,3
4,4
5,5
6,6
7,7
8,8
9,9
10,10
11,11
12,12
13,13
14,14
15,15
16,16
17,17
18,18
19,19
20,20
21,21
22,22
23,23
24,24
25,25
26,26
27,27
28,28
29,29
30,30
31,31
32,32
33,33
34,34
35,35
36,36
37,37
38,38
39,39
40,40
41,41
0  N.
0  O.
1  P.SEA CONSTANTS
1,3
```

```
114        1,  1.19E-5,   1.6E-5,   .02
115        2,  4.46E-6,   5.44E-6,   .06
116        3,  6.70E-6,   4.12E-6,   .10
117        4,  1.49E-6,   5.96E-7,   .07
118        5,  1.78E-6,   3.96E-7,   .07
119        6,  7.43E-6,   9.96E-7,   .10
120        7,  1.19E-6,   1.28E-6,   .18
121        8,  2.20E-6,   6.20E-7,   .25
122        9,  1.04E-6,   7.88E-7,   .30
123        10, 6.68E-7,   5.04E-7,   .30
124        11, 5.20E-7,   4.48E-7,   .25
125        12, 4.83E-7,   2.78E-7,   .25
126        13, 4.46E-7,   2.51E-7,   .25
127        14, 4.46E-7,   1.78E-7,   .25
128        15, 4.16E-7,   1.24E-7,   .25
129        16, 3.27E-7,   7.92E-8,   .40
130        17, 2.53E-7,   4.00E-8,   .40
131        18, 1.78E-7,   3.09E-8,   .40
132        19, 1.19E-7,   1.98E-8,   .40
133        20, 7.43E-8,   1.27E-8,   .40
134        2,3
135        1, 0.,0.,0.
136        2, 0.,0.,0.
137        3, 0.,0.,0.
138        4, 3.57E-6, 9.E-6,  0.10
139        5, 3.57E-6, 9.E-6,  0.45
140        6, 3.57E-6, 9.6E-6, 0.45
141        7, 3.06E-6, 7.78E-6, 0.45
142        8, 5.10E-6, 9.5E-6,  0.45
143        9, 1.12E-5, 1.91E-5, 0.45
144        10, 9.18E-6, 1.55E-5, 0.45
145        11, 1.02E-6, 1.26E-5, 0.45
146        12, 2.04E-7, 9.54E-6, 0.45
147        13, 1.02E-7, 7.68E-6,  0.45
148        14, 6.12E-8, 6.12E-6, 0.45
149        15, 2.04E-8, 4.75E-6, 0.45
150        16, 1.02E-8, 3.83E-6, 0.45
151        17, 6.12E-9,2.45E-6, 0.45
152        18, 2.04E-9,1.5E-6, 0.45
153        19, 1.02E-9,1.21E-6,0.45
154        20, 6.12E-10,9.73E-7,0.45
155        3,3
156        4,3
157        5,3
158        6,3
159        7,3
160        8,3
161        9,3
162        10,3
163        11,3
164        12,3
165        13,3
166        1, 7.E-5, 7.11E-5, 0.1
167        2, 7.E-5, 5.5E-5,  0.12
168        3, 7.E-5, 5.3E-5, 0.08
169        4, 1.16E-5, 5.56E-5, .06
170        5, 2.33E-5, 2.76E-5, 0.045
```

```
171      6, 1.16E-5, 1.76E-5, 0.05
172      7, 1.32E-5, 1.41E-5, 0.045
173      8, 7.75E-6, 8.62E-6, 0.04
174      9, 4.65E-6, 6.95E-6, 0.045
175      10, 3.1E-6, 5.01E-6, .05
176      11, 3.26E-6, 4.45E-6, .05
177      12, 3.1E-6, 8.7E-6, 0.05
178      13, 3.1E-6, 9.9E-6, 0.05
179      14, 3.49E-6, 7.01E-6, 0.05
180      15, 6.98E-6, 6.89E-6, 0.05
181      16, 8.53E-6, 5.55E-6, 0.05
182      17, 5.43E-6, 4.46E-6, 0.05
183      18, 7.75E-7, 2.72E-6, 0.05
184      19, 1.55E-7, 1.74E-6, 0.05
185      20, 5.43E-8, 1.11E-6, 0.05
186      14,3
187      15,3
188      1,0.,0.,0.
189      2,0.,0.,0.
190      3,0.,0.,0.
191      4,0.,0.,0.
192      5,0.,0.,0.
193      6,0.,0.,0.
194      7,0.,0.,0.
195      8,0.,0.,0.
196      9, 1.43E-5, 5.66E-4, 0.07
197      10, 7.16E-6, 2.58E-4, 0.07
198      11, 3.58E-6, 2.03E-4, 0.09
199      12, 2.51E-6, 1.259E-4, 0.06
200      13, 1.43E-6, 9.06E-5, 0.09
201      14, 7.16E-7, 6.34E-5, 0.09
202      15, 3.58E-7, 4.42E-5, 0.09
203      16, 2.86E-7, 3.18E-5, .1
204      17, 1.79E-7, 2.28E-5, .1
205      18, 6.44E-8, 1.39E-5, .1
206      19, 3.22E-8, 1.0E-5, .1
207      20, 1.79E-8, 8.06E-6, 0.1
208      16,3
209      17,3
210      18,3
211      19,3
212      20,3
213      21,3
214      22,3
215      23,3
216      1,0.,0.,0.
217      2,0.,0.,0.
218      3,0.,0.,0.
219      4,0.,0.,0.
220      5,0.,0.,0.
221      6,0.,0.,0.
222      7,0.,0.,0.
223      8,0.,0.,0.
224      9, 1.49E-5, 6.35E-4, 0.03
225      10, 7.44E-6, 4.56E-4, 0.03
226      11, 3.72E-6, 3.23E-4, 0.03
227      12, 2.6E-6, 2.25E-4, 0.035
```

ORIGINAL PAGE IS
OF POOR QUALITY

```
13, 1.49E-6, 1.61E-4, 0.035
14,7.44E-7, 1.14E-4, 0.04
15, 3.72E-7, 7.07E-5, 0.04
16,2.86E-7, 5.08E-5, 0.045
17,1.79E-7,3.64E-5,0.045
18,6.44E-8, 2.50E-5, 0.045
19, 3.22E-8, 2.03E-5, 0.045
20, 1.79E-8, 1.15E-5, 0.045
24,3
25,3
26,3
27,3
28,3
29,3
30,3
31,3
32,3
33,3
34,3
35,3
36,3
37,3
38,3
39,3
40,3
41,1
1, 446000.,0.,0.
2, 120000.,0.,0.
3, 2632.0, 0.,0.
4, 0.33,0.,0.
5, 0.33,0.,0.
6, 0.0212,0.,0.
7, 223.7,0.,0.
8, 210.,0.,0.
9, -1.,0.,0.
0  Q.
1  R.
.11468E-6,13200.,.3E-8
0 S.
1  T.
1,1
2,1
3,1
4,1
5,1
6,1
7,1
8,1
9,1
10,1
11,1
12,1
13,1
14,1
15,1
16,1
17,1
```

ORIGINAL PAGE IS
OF POOR QUALITY

```
285     18,1
286     19,1
287     20,1
288     21,1
289     22,1
290     23,1
291     24,1
292     25,1
293     26,1
294     27,1
295     28,1
296     29,1
297     30,1
298     31,1
299     32,1
300     33,1
301     34,1
302     35,1
303     36,1
304     37,1
305     38,1
306     39,1
307     40,1
308     41,1
309     1  U.
310     1,1
311     .05,.05,.05,.05,.05,.05,.07,.08,.08,.1,.13,.15,.15,.14,.13,.13,.13,.13,.15,.14
312     2,1
313     .05,.05,.05,.05,.05,.05,.07,.08,.08,.1,.13,.15,.15,.14,.13,.13,.13,.13,.15,.14
314     3,1
315     .05,.05,.05,.05,.05,.05,.07,.08,.08,.1,.13,.15,.15,.14,.13,.13,.13,.13,.15,.14
316     4,1
317     .05,.05,.05,.05,.05,.05,.07,.08,.08,.1,.13,.15,.15,.14,.13,.13,.13,.13,.15,.14
318     5,1
319     .05,.05,.05,.05,.05,.05,.07,.08,.08,.1,.13,.15,.15,.14,.13,.13,.13,.13,.15,.14
320     6,1
321     .05,.05,.05,.05,.05,.05,.07,.08,.08,.1,.13,.15,.15,.14,.13,.13,.13,.13,.15,.14
322     7,1
323     .05,.05,.05,.05,.05,.05,.07,.08,.08,.1,.13,.15,.15,.14,.13,.13,.13,.13,.15,.14
324     8,1
325     .05,.05,.05,.05,.05,.05,.07,.08,.08,.1,.13,.15,.15,.14,.13,.13,.13,.13,.15,.14
326     9,1
327     .05,.05,.05,.05,.05,.05,.07,.08,.08,.1,.13,.15,.15,.14,.13,.13,.13,.13,.15,.14
328     10,1
329     .05,.05,.05,.05,.05,.05,.07,.08,.08,.1,.13,.15,.15,.14,.13,.13,.13,.13,.15,.14
330     11,1
331     .05,.05,.05,.05,.05,.05,.07,.08,.08,.1,.13,.15,.15,.14,.13,.13,.13,.13,.15,.14
332     12,1
333     .05,.05,.05,.05,.05,.05,.07,.08,.08,.1,.13,.15,.15,.14,.13,.13,.13,.13,.15,.14
334     13,1
335     .05,.05,.05,.05,.05,.05,.07,.08,.08,.1,.13,.15,.15,.14,.13,.13,.13,.13,.15,.14
336     14,1
337     .05,.05,.05,.05,.05,.05,.07,.08,.08,.1,.13,.15,.15,.14,.13,.13,.13,.13,.15,.14
338     15,1
339     .05,.05,.05,.05,.05,.05,.07,.08,.08,.1,.13,.15,.15,.14,.13,.13,.13,.13,.15,.14
340     16,1
341     .05,.05,.05,.05,.05,.05,.07,.08,.08,.1,.13,.15,.15,.14,.13,.13,.13,.13,.15,.14
```

ORIGINAL PAGE IS
OF POOR QUALITY

```
342     17,1
343     .05,.05,.05,.05,.05,.05,.07,.08,.08,.1,.13,.15,.15,.14,.13,.13,.13,.13,.15,.14
344     18,1
345     .05,.05,.05,.05,.05,.05,.07,.08,.08,.1,.13,.15,.15,.14,.13,.13,.13,.13,.15,.14
346     19,1
347     .05,.05,.05,.05,.05,.05,.07,.08,.08,.1,.13,.15,.15,.14,.13,.13,.13,.13,.15,.14
348     20,1
349     .05,.05,.05,.05,.05,.05,.07,.08,.08,.1,.13,.15,.15,.14,.13,.13,.13,.13,.15,.14
350     21,1
351     .05,.05,.05,.05,.05,.05,.07,.08,.08,.1,.13,.15,.15,.14,.13,.13,.13,.13,.15,.14
352     22,1
353     .05,.05,.05,.05,.05,.05,.07,.08,.08,.1,.13,.15,.15,.14,.13,.13,.13,.13,.15,.14
354     23,1
355     .05,.05,.05,.05,.05,.05,.07,.08,.08,.1,.13,.15,.15,.14,.13,.13,.13,.13,.15,.14
356     24,1
357     .05,.05,.05,.05,.05,.05,.07,.08,.08,.1,.13,.15,.15,.14,.13,.13,.13,.13,.15,.14
358     25,1
359     .05,.05,.05,.05,.05,.05,.07,.08,.08,.1,.13,.15,.15,.14,.13,.13,.13,.13,.15,.14
360     26,1
361     .05,.05,.05,.05,.05,.05,.07,.08,.08,.1,.13,.15,.15,.14,.13,.13,.13,.13,.15,.14
362     27,1
363     .05,.05,.05,.05,.05,.05,.07,.08,.08,.1,.13,.15,.15,.14,.13,.13,.13,.13,.15,.14
364     28,1
365     .05,.05,.05,.05,.05,.05,.07,.08,.08,.1,.13,.15,.15,.14,.13,.13,.13,.13,.15,.14
366     29,1
367     .05,.05,.05,.05,.05,.05,.07,.08,.08,.1,.13,.15,.15,.14,.13,.13,.13,.13,.15,.14
368     30,1
369     .05,.05,.05,.05,.05,.05,.07,.08,.08,.1,.13,.15,.15,.14,.13,.13,.13,.13,.15,.14
370     31,1
371     .05,.05,.05,.05,.05,.05,.07,.08,.08,.1,.13,.15,.15,.14,.13,.13,.13,.13,.15,.14
372     32,1
373     .05,.05,.05,.05,.05,.05,.07,.08,.08,.1,.13,.15,.15,.14,.13,.13,.13,.13,.15,.14
374     33,1
375     .05,.05,.05,.05,.05,.05,.07,.08,.08,.1,.13,.15,.15,.14,.13,.13,.13,.13,.15,.14
376     34,1
377     .05,.05,.05,.05,.05,.05,.07,.08,.08,.1,.13,.15,.15,.14,.13,.13,.13,.13,.15,.14
378     35,1
379     .05,.05,.05,.05,.05,.05,.07,.08,.08,.1,.13,.15,.15,.14,.13,.13,.13,.13,.15,.14
380     36,1
381     .05,.05,.05,.05,.05,.05,.07,.08,.08,.1,.13,.15,.15,.14,.13,.13,.13,.13,.15,.14
382     37,1
383     .05,.05,.05,.05,.05,.05,.07,.08,.08,.1,.13,.15,.15,.14,.13,.13,.13,.13,.15,.14
384     38,1
385     .05,.05,.05,.05,.05,.05,.07,.08,.08,.1,.13,.15,.15,.14,.13,.13,.13,.13,.15,.14
386     39,1
387     .05,.05,.05,.05,.05,.05,.07,.08,.08,.1,.13,.15,.15,.14,.13,.13,.13,.13,.15,.14
388     40,1
389     .05,.05,.05,.05,.05,.05,.07,.08,.08,.1,.13,.15,.15,.14,.13,.13,.13,.13,.15,.14
390     41,1
391     .05,.05,.05,.05,.05,.05,.07,.08,.08,.1,.13,.15,.15,.14,.13,.13,.13,.13,.15,.14
392     1  V.
393     1,1
394     .032,.025,.03,.016,.0125,.01,.008,.0063,.005,.004,.0032,.0025,.002,.0016,
395     .0013,.001,.0008,.00063,.00050,.0004
396     2,1
397     .064,.05,.06,.032,.025,.02,.016,.0126,.01,.008,.0064,.005,.004,.0032,
398     .0026,.002,.0016,.00126,.001,.0008
```

ORIGINAL PAGE IS
OF POOR QUALITY

```
399     3,0
400     4,0
401     5,0
402     6,0
403     7,0
404     8,0
405     9,0
406     10,0
407     11,0
408     12,0
409     13,1
410     .064,.05,.06,.032,.025,.02,.016,.0126,.01,.008,.0064,.005,.004,.0032,
411     .0026,.002,.0016,.00126,.001,.0008
412     14,0
413     15,1
414     .064,.05,.06,.032,.025,.02,.016,.0126,.01,.008,.0064,.005,.004,.0032,
415     .0026,.002,.0016,.00126,.001,.0008
416     16,0
417     17,0
418     18,0
419     19,0
420     20,0
421     21,0
422     22,0
423     23,1
424     .064,.05,.06,.032,.025,.02,.016,.0126,.01,.008,.0064,.005,.004,.0032,
425     .0026,.002,.0016,.00126,.001,.0008
426     24,0
427     25,0
428     26,0
429     27,0
430     28,0
431     29,0
432     30,0
433     31,0
434     32,0
435     33,0
436     34,0
437     35,0
438     36,0
439     37,0
440     38,0
441     39,0
442     40,0
443     41,1
444     .064,.05,.06,.032,.025,.02,.016,.0126,.01,.008,.0064,.005,.004,.0032,
445     .0026,.002,.0016,.00126,.001,.0008
446     1  W. EXTERNAL SPL
447     1,1
448     105.,109.,113.,115.,119.,121.,119.,115.,114.,117.,122.,126.,124.,120.,121.,120.,
449     117.,114.,115.,115.
450     2,1
451     110.,111.,115.,120.,121.,124.,126.,126.,125.,128.,126.,126.,125.,124.,123.,120.,
452     119.,118.,118.,113.
453     3,0
454     4,0
455     5,0
```

ORIGINAL PAGE IS
OF POOR QUALITY

```
456    6,0
457    7,0
458    8,0
459    9,0
460    10,0
461    11,0
462    12,0
463    13,1
464    110.,111.,115.,116.,111.,124.,128.,128.,125.,125.,123.,124.,123.,120.,120.,119.,
465    117.,114.,113.,111.
466    14,0
467    15,1
468    108.,111.,115.,120.,122.,124.,123.,122.,121.,120.,118.,122.,124.,124.,124.,121.,
469    116.,113.,112.,114.
470    16,0
471    17,0
472    18,0
473    19,0
474    20,0
475    21,0
476    22,0
477    23,1
478    108.,111.,115.,120.,123.,124.,124.,122.,124.,124.,121.,126.,126.,125.,124.,121.,
479    121.,120.,117.,116.
480    24,0
481    25,0
482    26,0
483    27,0
484    28,1
485    108.,111.,115.,120.,122.,124.,123.,122.,121.,120.,118.,122.,124.,124.,124.,121.,
486    116.,113.,112.,114.
487    29,0
488    30,0
489    31,0
490    32,0
491    33,0
492    34,0
493    35,0
494    36,1
495    108.,111.,115.,120.,123.,124.,124.,122.,124.,124.,121.,126.,126.,125.,124.,121.,
496    121.,120.,117.,116.
497    37,0
498    38,0
499    39,0
500    40,0
501    41,1
502    102.,105.,110.,113.,118.,120.,122.,121.,120.,118.,118.,121.,120.,118.,
503    118.,117.,113.,112.,110.,108.
504    1  X.
505    1,2
506    .0258,.93,.05,.27
507    2,2
508    .0258,.93,.05,.27
509    3,0
510    4,0
511    5,0
512    6,0
```

```
    513       7,0
    514       8,0
    515       9,0
    516       10,0
    517       11,0
    518       12,0
    519       13,2
    520       .0258,.93,.05,.27
    521       14,0
    522       15,2
    523       .0258,.93,.05,.27
    524       16,0
    525       17,0
    526       18,0
    527       19,0
    528       20,0
    529       21,0
    530       22,0
    531       23,2
    532       .0258,.93,.05,.27
    533       24,0
    534       25,0
    535       26,0
    536       27,0
    537       28,0
    538       29,0
    539       30,0
    540       31,0
    541       32,0
    542       33,0
    543       34,0
    544       35,0
    545       36,0
    546       37,0
    547       38,0
    548       39,0
    549       40,0
    550       41,1
    551       1.0,1.0,1.0,1.0
    552       1   Y.
    553       31.5,40.,50.,63.,80.,100.,125.,160.,200.,250.,315.,400.,500.,630.,800.,
    554       1000.,1250.,1600.,2000.,2500.
    555       0  2.

@PRT,S XX.DATA30
```

```
MPETITBIN308*XX(1).DATA30
      1         MARK PETTITT
      2         SIMPLE SPACE SHUTTLE WITH SPACELAB-2 PAYLOAD
      3         1 A.
      4         1
      5         1,0,1,1
      6         0,0,0,0
      7         0,1,0,0
      8         1 B.
      9         3,5,4,20,3,10,4,6,50,50,1,9,50,3
     10         1 C.
     11         1,8,20,0.1150
     12         0 D.
     13         1 E.
     14         0.001,0.02
     15         1 F.
     16         23,9,3,3,3,6,50,2,3,4,50,20,0,1,9,3,4
     17         1 G.
     18         50,2,5,1,10,.030,5,0.01
     19         1 H.
     20         1,1,2
     21         2,2,3
     22         1 I.
     23         1,3,6786.0,5,6,20,0,0,0
     24         2,3,23926.0,9,10,8,0,0,0
     25         1 J.
     26         0,0,2
     27         1,2,2
     28         1 K.
     29         1,  0., 0., 0.
     30         2,  0.,105., 0.
     31         3,  0., 0.,105.
     32         4,200.,0.,25.
     33         5,200.,0.,0.
     34         6,200.,105.,0.
     35         7,200.,0.,105.
     36         8,320.,0.,84.
     37         9,320.,0.,0.
     38         10,320.,105.,0.
     39         11,320.,0.,105.
     40         12,720.,0.,40.
     41         13,0.,-105.,0.
     42         14,200.,-105.,0.
     43         15,320.,-105.,0.
     44         16,720.,105.,0.
     45         17,720.,-105.,0.
     46         18,720.,0.,0.
     47         19,0.,0.,25.
     48         20,200.,0.,84.
     49         21,0.,102.,25.
     50         22,200.,102.,25.
     51         23,200.,-102.,25.
     52         24,320.,102.,25.
     53         25,320.,0.,25.
     54         26,320.,-102.,25.
     55         27,720.,0.,25.
     56         28,720.,-102.,25.
```

```
 57     29,0.,-102.,25.
 58     1 L.
 59     1,7,218380.,19,27,21,29,28,21
 60     2,0,109440.,0,0,0,0,0,0
 61     3,0,109440.,0,0,0,0,0,0
 62     4,7,60800.,19,27,21,29,23,21
 63     5,7,36480.,19,27,21,23,26,22
 64     6,7,121600.,19,27,21,26,28,24
 65     7,6,66000.,1,5,13,13,6,6
 66     8,6,39600.,5,9,14,14,10,10
 67     9,6,132000.,9,18,15,15,16,16
 68     1 M.
 69     1,4,5,6
 70     2,4,5,6
 71     3,4,5,6
 72     1 N.
 73     1,50.,96.
 74     7.4,1.,1.,1.3,1.,540.,178.8,180.,62.6
 75     8.9,2.,1.,1.1,.99,550.,173.4,170.,65.3
 76     10.1,3.,1.,1.2,.61,660.,165.,50.,69.5
 77     10.4,3.,1.,10.4,1.,.56,660.,159.6,50.,72.2
 78     12.2,1.,2.,2.,1.,680.,241.,0.,31.2
 79     13.2,1.,2.,2.4,1.,600.,241.7,70.,31.2
 80     16.5,1.,2.,1.8,1.,520.,241.7,200.,31.2
 81     17.1,2.,1.,1.4,.87,380.,146.,0.,79.
 82     17.2,2.,1.,.9,.76,350.,157.,0.,73.5
 83     17.4,3.,1.,.9,.59,495.,157.,0.,73.5
 84     18.7,4.,1.,1.3,.6,660.,144.6,60.,79.7
 85     19.7,3.,1.,.9,.87,534.,137.,186.,83.1
 86     20.7,2.,2.,1.4,.96,720.,241.7,0.,31.2
 87     21.4,2.,2.,2.1,.94,560.,241.7,0.,31.2
 88     22.4,5.,1.,.8,.81.650.,146.,70.,79.
 89     23.8,2.,2.,1.5,.76,620.,241.7,0.,31.2
 90     24.5,1.,2.,2.2,1.,340.,241.7,370.,31.2
 91     27.,6.,1.,1.2,.77,672.,137.8,48.,83.1
 92     27.3,6.,1.,1.,.87,660.,146.,60.,79.
 93     27.8,3.,2.,1.1,.95,660.,241.7,0.,31.2
 94     29.1,2.,2.,1.8,.89,370.,241.7,350.,31.2
 95     33.4,7.,1.,2.,.96,658.,151.4,62.,76.3
 96     33.8,7.,1.,.6,.71,658.,137.8,62.,83.1
 97     34.7,3.,2.,2.3,.95,510.,241.7,0.,31.2
 98     35.5,3.,2.,1.8,.88,495.,241.7,0.,31.2
 99     37.4,4.,2.,1.4,.84,720.,241.7,0.,31.2
100     38.8,3.,3.,2.8,.94,480.,241.7,140.,31.2
101     40.3,5.,2.,1.6,.99,680.,241.7,0.,31.2
102     40.6,8.,1.,.9,.88,658.0,144.6,32.0,79.7
103     43.5,5.,2.,1.9,.84,720.,241.7,0.,31.2
104     44.8,6.,2.,1.1,.75,700.,200.8,0.,51.6
105     46.4,5.,2.,2.1,.84,540.,200.8,0.,51.6
106     46.8,9.,1.,.9,.81,655.,144.,50.,80.
107     47.1,4.,2.,1.2,.87,410.,228.,0.,38.
108     47.9,3.,2.,1.1,.79,330.,205.,275.,48.
109     48.8,7.,2.,2.4,.78,663.,228.,0.,38.
110     49.3,5.,2.,1.6,.76,500.,200.8,0.,51.6
111     49.7,5.,2.,1.5,.73,450.,200.8,0.,51.6
112     50.3,5.,2.,1.2,.93,430.,200.8,0.,51.6
113     51.0,8.,2.,1.2,.59,680.,200.8,0.,51.6
```

```
114     51.4,4.,2.,.9,.71,400.,200.,240.,52.
115     52.2,1.,2.,1.,.93,310.,200.8,225.0,51.6
116     53.2,4.,3.,2.4,.66,540.,228.,40.,38.
117     54.2,8.,4.,1.1,.53,620.,304.,0.,0.
118     54.2,6.,2.,1.2,.95,500.,200.8,200.,51.6
119     55.0,1.,4.,1.2,.87,295.,304.,55.,0.
120     55.,10.,3.,2.5,.83,700.,236.,25.,34.
121     55.5,5.,2.,1.4,.88,370.,200.8,205.0,51.6
122     55.8,10.,1.,.9,.92,700.,173.4,25.,65.3
123     56.9,7.,1.,.9,.79,500.,200.,115.,52.
124     2,0.,0.
125     3
126     0 0.
127     1 P. SEA CONSTANTS
128     1,0
129     2,3
130     1,  1.19E-5,  1.6E-5,  .02
131     2,  4.46E-6,  5.44E-6,  .06
132     3,  6.70E-6,  4.12E-6,  .10
133     4,  1.49E-6,  5.96E-7,  .07
134     5,  1.78E-6,  3.96E-7,  .07
135     6,  7.43E-6,  9.96E-7,  .10
136     7,  1.19E-6,  1,28E-6,  .18
137     8,  2.20E-6,  6.20E-7,  .25
138     9,  1.04E-6,  7.88E-7,  .30
139     10, 6.68E-7,  5.04E-7,  .30
140     11, 5.20E-7,  4.48E-7,  .25
141     12, 4.83E-7,  2.78E-7,  .25
142     13, 4.46E-7,  2.51E-7,  .25
143     14, 4.46E-7,  1.78E-7,  .25
144     15, 4.16E-7,  1.24E-7,  .25
145     16, 3.27E-7,  7.92E-8,  .40
146     17, 2.53E-7,  4.00E-8,  .40
147     18, 1.78E-7,  3.09E-8,  .40
148     19, 1.19E-7,  1.98E-8,  .40
149     20, 7.43E-8,  1.27E-8,  .40
150     3,3
151     1 Q.
152     1,3,5397884.5,1,2,3,4
153     2,3,814301.,5,6,7,8
154     3,3,3046400.,9,10,11,12
155     1 R.
156     .11468E-6,13200.,.3E-8
157     0 S.
158     1 T.
159     1,0
160     2,0
161     3,0
162     4,1
163     5,2
164     6,3
165     7,1
166     8,2
167     9,3
168     1 U.
169     1,1
170     .01,.0096,.0073,.0056,.0081,.0063,.0098,.0046,.0034,.0034,.0033,.0023,.0018,
```

```
.0010,.0008,.00065,.00053,.00044,.00037
2,1
.05,.05,.05,.05,.05,.05,.07,.08,.08,.1,.13,.15,.15,.14,.13,.13,.13,.13,.15,.14
3,1
.05,.05,.05,.05,.05,.05,.07,.08,.08,.1,.13,.15,.15,.14,.13,.13,.13,.13,.15,.14
4,1
.05,.05,.05,.05,.05,.05,.07,.08,.08,.1,.13,.15,.15,.14,.13,.13,.13,.13,.15,.14
5,1
.05,.05,.05,.05,.05,.05,.07,.08,.08,.1,.13,.15,.15,.14,.13,.13,.13,.13,.15,.14
6,1
.05,.05,.05,.05,.05,.05,.07,.08,.08,.1,.13,.15,.15,.14,.13,.13,.13,.13,.15,.14
7,1
.05,.05,.05,.05,.05,.05,.07,.08,.08,.1,.13,.15,.15,.14,.13,.13,.13,.13,.15,.14
8,1
.05,.05,.05,.05,.05,.05,.07,.08,.08,.1,.13,.15,.15,.14,.13,.13,.13,.13,.15,.14
9,1
.05,.05,.05,.05,.05,.05,.07,.08,.08,.1,.13,.15,.15,.14,.13,.13,.13,.13,.15,.14
1 V.
1,1
.032,.025,.03,.016,.0125,.01,.008,.0063,.005,.004,.0032,.0025,.002,.0016,
.0013,.001,.0008,.00063,.00050,.0004
2,1
.064,.05,.06,.032,.025,.02,.016,.0126,.01,.008,.0064,.005,.004,.0032,
.0026,.002,.0016,.00126,.001,.0008
3,0
1 W.
1,1
105.,109.,113.,115.,119.,121.,119.,115.,114.,117.,122.,126.,124.,120.,121.,120.,
117.,114.,115.,115.
2,1
105.,109.,113.,115.,119.,121.,119.,115.,114.,117.,122.,126.,124.,120.,121.,120.,
117.,114.,115.,115.
3,1
105.,109.,113.,115.,119.,121.,119.,115.,114.,117.,122.,126.,124.,120.,121.,120.,
117.,114.,115.,115.
1  X.
1,2
.0258,.93,.05,.27
2,2
.0258,.93,.05,.27
3,0
1 Y.
31.5,40.,50.,63.,80.,100.,125.,160.,200.,250.,315.,400.,500.,630.,800.,
1000.,1250.,1600.,2000.,2500.
0 Z.

@PRT,S XX.DATA31
```

```
MPETITBIN308*XX(1).DATA31
MARK PETTITT
SPACE SHUTTLE - EMPTY PAYLOAD BAY (CYLINDER MODEL:DOOR INPUT ONLY)
1 A.
1
0,0,1,1
0,0,0,0
0,1,0,0
1 B.
3,5,4,20,3,10,4,6,50,50,1,9,50,3
1 C.
1,4,4,0.1150
0 D.
1 E.
.001,.02
1 F.
29,5,4,1,1,6,50,2,1,4,50,20,0,1,9,3,4
0  G.
0  H.
0  I.
1 J.
0,0,2,0
1,2,2,3
1 K.
1,  0., 0., 0.
2,  0.,105., 0.
3,  0., 0.,105.
4,200.,0.,25.
5,200.,0.,0.
6,200.,105.,0.
7,200.,0.,105.
8,320.,0.,84.
9,320.,0.,0.
10,320.,105.,0.
11,320.,0.,105.
12,720.,0.,40.
13,0.,-105.,0.
14,200.,-105.,0.
15,320.,-105.,0.
16,720.,105.,0.
17,720.,-105.,0.
18,720.,0.,0.
19,0.,0.,25.
20,200.,0.,84.
21,0.,102.,25.
22,200.,102.,25.
23,200.,-102.,25.
24,320.,102.,25.
25,320.,0.,25.
26,320.,-102.,25.
27,720.,0.,25.
28,720.,-102.,25.
29,0.,-102.,25.
1 L.
1,7,218880.,19,27,21,29,28,21
2,0,109440.,0,0,0,0,0,0
3,0,109440.,0,0,0,0,0,0
```

ORIGINAL PAGE IS
OF POOR QUALITY

```
4,0,11634.,0,0,0,0,0,0
5,6,237504.,1,18,13,13,16,16
1 M.
1,1
2,2
3,3
4,4
1 N.
1.50.,96.
7.4,1.,1.,1.3,1.,540.,176.8,180.,62.6
8.9,2.,1.,1.1,.99,550.,173.4,170.,65.3
10.1,3.,1.,1.2,.61,660.,165.,50.,69.5
10.4,3.,1.,10.4,1.,.56,660.,159.6,50.,72.2
12.2,1.,2.,2.,1.,680.,241.,0.,31.2
13.2,1.,2.,2.4,1.,600.,241.7,70.,31.2
16.5,1.,2.,1.8,1.,520.,241.7,200.,31.2
17.1,2.,1.,1.4,.87,380.,146.,0.,79.
17.2,2.,1.,.9,.76,350.,157.,0.,73.5
17.4,3.,1.,.9,.59,495.,157.,0.,73.5
18.7,4.,1.,1.3,.8,660.,144.6,60.,79.7
19.7,3.,1.,.9,.87,534.,137.,186.,83.1
20.7,2.,2.,1.4,.96,720.,241.7,0.,31.2
21.4,2.,2.,2.1,.94,560.,241.7,0.,31.2
22.4,5.,1.,.8,.81,650.,146.,70.,79.
23.8,2.,2.,1.5,.76,620.,241.7,0.,31.2
24.5,1.,2.,2.2,1.,340.,241.7,370.,31.2
27.,6.,1.,1.2,.77,672.,137.8,48.,83.1
27.3,6.,1.,1.,.87,660.,146.,60.,79.
27.8,3.,2.,1.1,.95,660.,241.7,0.,31.2
29.1,2.,2.,1.8,.89,370.,241.7,350.,31.2
33.4,7.,1.,2.,.96,658.,151.4,62.,76.3
33.8,7.,1.,.6,.71,658.,137.8,62.,83.1
34.7,3.,2.,2.3,.95,510.,241.7,0.,31.2
35.5,3.,2.,1.8,.88,495.,241.7,0.,31.2
37.4,4.,2.,1.4,.84,720.,241.7,0.,31.2
38.8,3.,3.,2.8,.94,480.,241.7,140.,31.2
40.3,5.,2.,1.6,.99,680.,241.7,0.,31.2
40.6,8.,1.,.9,.88,658.0,144.6,32.0,79.7
43.5,5.,2.,1.9,.84,720.,241.7,0.,31.2
44.8,6.,2.,1.1,.75,700.,200.8,0.,51.6
46.4,5.,2.,2.1,.64,540.,200.8,0.,51.6
46.8,9.,1.,.9,.81,655.,144.,50.,80.
47.1,4.,2.,1.2,.87,410.,228.,0.,38.
47.9,3.,2.,1.1,.79,330.,208.,275.,48.
48.8,7.,2.,2.4,.78,683.,228.,0.,38.
49.3,5.,2.,1.6,.76,500.,200.8,0.,51.6
49.7,5.,2.,1.5,.73,450.,200.8,0.,51.6
50.3,5.,2.,1.2,.93,430.,200.8,0.,51.6
51.0,8.,2.,1.2,.59,680.,200.8,0.,51.6
51.4,4.,2.,.9,.71,400.,200.,240.,52.
52.2,1.,2.,1.,.93,310.,200.8,225.0,51.6
53.2,4.,3.,2.4,.66,540.,228.,40.,38.
54.2,8.,4.,1.1,.53,620.,304.,0.,0.
54.2,6.,2.,1.2,.95,500.,200.8,200.,51.6
55.0,1.,4.,1.2,.87,295.,304.,55.,0.
55.,10.,3.,2.5,.83,700.,236.,25.,34.
55.5,5.,2.,1.4,.88,370.,200.8,205.0,51.6
```

```
114        55.8,10.,1.,.9,.92,700.,173.4,25.,65.3
115        56.9,7.,1.,.9,.79,500.,200.,115.,52.
116        2,0.,0.
117        3
118        4,0.,0.
119        0 0.
120        1 P. SEA CONSTANTS
121        1,0
122        2,3
123        1, .136E-2, .136E-2, .02
124        2, .105E-2, .105E-2, .06
125        3, .705E-3, .705E-3, .10
126        4, .152E-2, .152E-2, .07
127        5, .657E-3, .657E-3, .07
128        6, .485E-3, .485E-3, .10
129        7, .355E-3, .355E-3, .18
130        8, .377E-3, .377E-3, .25
131        9, .325E-3, .325E-3, .30
132        10,.232E-3, .232E-3, .30
133        11,.129E-3, .129E-3, .25
134        12,.819E-4, .819E-4, .25
135        13,.615E-4, .615E-4, .25
136        14,.711E-4, .711E-4, .25
137        15,.359E-4, .359E-4, .25
138        16,.254E-4, .254E-4, .40
139        17,.255E-4, .255E-4, .40
140        18,.178E-4, .178E-4, .40
141        19,.122E-4, .122E-4, .4
142        20,.633E-5, .633E-5, .40
143        3,3
144        4,1
145        1,1030350.,0.,0.
146        2,947.,0.,0.
147        3,1208.,0.,0.
148        4,.3,0.,0.
149        5,.3,0.,0.
150        6,0.0336,0.,0.
151        7,55.4,0.,0.
152        8,210.,0.,0.
153        9,-1.0,0.,0.
154        1 Q.
155        1,2,24937920.,1,2,3,18
156        1 R.
157        .11468E-6,13200.,.3E-8
158        0 S.
159        1 T.
160        1,1
161        2,1
162        3,1
163        4,1
164        5,1
165        1 U.
166        1,1
167        .01,.0086,.0073,.0056,.0081,.0063,.0088,.0046,.0034,.0034,.0033,.0023,.0018,
168        .0013,.0010,.0008,.00065,.00053,.00044,.00037
169        2,1
170        .05,.05,.05,.05,.05,.05,.07,.08,.08,.1,.13,.15,.15,.14,.13,.13,.13,.13,.15,.14
```

```
 171      3,1
 172      .05,.05,.05,.05,.05,.05,.07,.08,.08,.1,.13,.15,.15,.14,.13,.13,.13,.13,.15,.14
 173      4,1
 174      .05,.05,.05,.05,.05,.05,.07,.08,.08,.1,.13,.15,.15,.14,.13,.13,.13,.13,.15,.14
 175      5,1
 176      .05,.05,.05,.05,.05,.05,.07,.08,.08,.1,.13,.15,.15,.14,.13,.13,.13,.13,.15,.14
 177      1 V.
 178      1,1
 179      .032,.025,.03,.016,.0125,.01,.008,.0063,.005,.004,.0032,.0025,.002,.0016,
 180      .0013,.001,.0008,.00063,.00050,.0004
 181      2,1
 182      .032,.025,.03,.016,.0125,.01,.008,.0063,.005,.004,.0032,.0025,.002,.0016,
 183      .0013,.001,.0008,.00063,.00050,.0004
 184      3,0
 185      4,1
 186      .064,.05,.06,.032,.025,.02,.016,.0126,.01,.008,.0064,.005,.004,.0032,
 187      .0026,.002,.0016,.00126,.001,.0008
 188      1 W.
 189      1,1
 190      105.,109.,113.,115.,119.,121.,119.,115.,114.,117.,122.,126.,124.,120.,121.,120.,
 191      117.,114.,115.,115.
 192      2,1
 193      105.,109.,113.,115.,119.,121.,119.,115.,114.,117.,122.,126.,124.,120.,121.,120.,
 194      117.,114.,115.,115.
 195      3,1
 196      105.,109.,113.,115.,119.,121.,119.,115.,114.,117.,122.,126.,124.,120.,121.,120.,
 197      117.,114.,115.,115.
 198      4,1
 199      110.,111.,115.,120.,121.,124.,126.,126.,125.,128.,126.,126.,125.,124.,123.,120.,
 200      119.,118.,118.,113.
 201      1  X.
 202      1,2
 203      .0258,.93,.05,.27
 204      2,2
 205      .0258,.93,.05,.27
 206      3,0
 207      4,2
 208      .0258,.93,.05,.27
 209      1 Y.
 210      31.5,40.,50.,63.,80.,100.,125.,160.,200.,250.,315.,400.,500.,630.,800.,
 211      1000.,1250.,1600.,2000.,2500.
 212      0 Z.

@BRKPT PRINT$
```