https://ntrs.nasa.gov/search.jsp?R=19850016926 2020-03-20T19:26:35+00:00Z

General Disclaimer

One or more of the Following Statements may affect this Document

- This document has been reproduced from the best copy furnished by the organizational source. It is being released in the interest of making available as much information as possible.

- This document may contain data, which exceeds the sheet parameters. It was furnished in this condition by the organizational source and is the best copy available.

- This document may contain tone-on-tone or color graphs, charts and/or pictures, which have been reproduced in black and white.

- This document is paginated as submitted by the original source.

- Portions of this document are not fully legible due to the historical nature of some of the material. However, it is the best reproduction available from the original submission.

Produced by the NASA Center for Aerospace Information (CASI)

NASA CONTRACTOR REPORT 166611

(NASA-CR-166611) ROTORCRAFT DIGITAL ADVANCED AVIONICS SYSTEM (RODAAS) FUNCTIONAL DESCRIPTION (Honeywell, Inc., St. Louis Park, Minn.) 188 p HC A09/MF A01 CSCL 01D

N85-25237

Unclas

G3/04 22411

Rotorcraft Digital Advanced Avionics System (RODAAS) Functional Description

Eric M. Peterson
Jim Bailey
Tom J. McManus

MAY 1985
RECEIVED
NASA STI FACILITY
ACCESS DEPT.

CONTRACT NAS2- 11695
January 1985

NASA

NASA CONTRACTOR REPORT 166611

Rotorcraft Digital Advanced Avionics System (RODAAS) Functional Description

Eric M. Peterson
Jim Bailey
Tom J. McManus
Honeywell Military Avionics Division
St. Louis Park, Minnesota

Prepared for
Ames Research Center
Under Contract NAS2-11695

National Aeronautics and
Space Administration

Ames Research Center
Moffett Field, California 94035

TABLE OF CONTENTS

1. INTRODUCTION.....1

2. RODAAS SYSTEM CONCEPT.....2

3. RODAAS SYSTEM DESCRIPTION.....3
   3.1. RODAAS FUNCTIONS.....3
   3.2. RODAAS CONTROLS AND DISPLAYS - GENERAL.....5
   3.3. RODAAS SYSTEM ARCHITECTURE.....8
   3.4. RODAAS MAJOR SUBSYSTEMS.....10
      3.4.1. CENTRAL COMPUTER UNIT.....10
         3.4.1.1. CENTRAL COMPUTER PROCESSOR.....10
         3.4.1.2. CENTRAL COMPUTER INPUT/OUTPUT.....12
         3.4.1.3. EEPROM MEMORY SYSTEM.....12
         3.4.1.4. HSD DISPLAY CONTROLLER.....14
         3.4.1.5. CENTRAL COMPUTER POWER SUPPLIES.....14
      3.4.2. RODAAS RADIO SYSTEM.....14
         3.4.2.1. RADIO TUNING CPU.....14
         3.4.2.2. COMMUNICATION RADIO.....15
         3.4.2.3. NAVIGATION RADIO.....17
         3.4.2.4. TACAN.....17
         3.4.2.5. TRANSPONDER.....17
      3.4.3. FLIGHT CONTROL SENSORS, SERVOACTUATORS.....17
         3.4.3.1. ENCODING ALTIMETER.....18
         3.4.3.2. AUTOPILOT SERVOACTUATORS.....18
         3.4.3.3. LASER INERTIAL REFERENCE SENSOR PACK.18
      3.4.4. ENGINE SENSORS.....18
         3.4.4.1. EXHAUST GAS TEMPERATURE.....22
         3.4.4.2. FUEL PRESSURE.....22
         3.4.4.3. ENGINE OIL TEMPERATURE.....22
         3.4.4.4. ENGINE OIL PRESSURE.....22
         3.4.4.5. TRANSMISSION OIL PRESSURE.....22
         3.4.4.6. DUAL TACHOMETER.....22
         3.4.4.7. GAS PRODUCER TACHOMETER.....22
         3.4.4.8. TORQUE PRESSURE.....23
         3.4.4.9. ENGINE CHIP DETECTOR.....23
         3.4.4.10. ENGINE INLET FILTER CLOGGED.....23
         3.4.4.11. TRANSMISSION CHIP DETECTOR.....23
         3.4.4.12. TAIL ROTOR CHIP DETECTOR.....23
         3.4.4.13. ENGINE FUEL PUMP INDS.....23
         3.4.4.14. RIGHT/LEFT FUEL BOOST PUMP INDS.....23
         3.4.4.15. RIGHT FUEL BOOST PUMP OFF.....23
         3.4.4.16. FUEL FILTER CLOGGED.....23
         3.4.4.17. ENGINE AIR FILTER CLOGGED.....24
         3.4.4.18. EMER FUEL CONTROL ON.....24
         3.4.4.19. HYDRAULIC PRESSURE LOW.....24
         3.4.4.20. FUEL QUANTITY LOW.....24
         3.4.4.21. ENGINE ICE DETECTOR.....24
         3.4.4.22. ENGINE ICE DETECTOR OFF 24
         3.4.4.23. ENGINE FIRE DETECTOR.....24
         3.4.4.24. FUEL FLOW SENSOR.....24
      3.4.5. CONFIGURATION STATUS SENSORS.....25
      3.4.6. MISCELLANEOUS SENSORS.....25
         3.4.6.1. TAS SENSOR.....25

3.4.6.2. OAT SENSOR.....25
3.4.6.3. PRESSURE SENSOR.....25
3.4.7. DATA LINK 25
3.5. RODAAS POWER DISTRIBUTION.....26

4. RODAAS MULTIFUNCTION CONTROLS AND DISPLAYS: CDU, HSD & PF.28
4.1. CONTROL DISPLAY UNIT DESCRIPTION.....28
4.1.1. NAV FUNCTION CONTROLS.....28
4.1.2. PAGE SELECT BUTTONS.....28
4.1.3. CONTROL UNIT DISPLAY.....28
4.1.4. CDU BEZEL BUTTONS.....30
4.1.5. CDU KEYBOARD.....33
4.1.6. CDU MISCELLANEOUS CONTROLS.....34
4.1.7. CDU DATA ENTRY.....34
4.1.7.1. SINGLE PARAMETER DATA ENTRY.....34
4.1.7.2. DUAL PARAMETER DATA ENTRY.....35
4.1.7.3. DATA ENTRY GENERAL REQUIREMENTS 35
4.1.7.4. DATA ENTRY ERRORS AND SYSTEM OPERATI.36
4.2. HORIZONTAL SITUATION DISPLAY DESCRIPTION.....38
4.2.1. HSD DISPLAY.....38
4.2.2. HSD CONTROLS.....41
4.3. PRIMARY FLIGHT DISPLAY DESCRIPTION.....44
4.3.1. PRIMARY FLIGHT DISPLAY.....44

5. RODAAS FUNCTION DESCRIPTION.....50
5.1. RODAAS AUTOPILOT/FLIGHT DIRECTOR FUNCTION.....51
5.1.1. AUTOPILOT/FLIGHT DIRECTOR CONTROLS AND DISPLA.53
5.1.1.1. AUTOPILOT MODE CONTROLLER.....53
5.1.1.2. SPECIAL SWITCHES.....54
5.1.1.3. ELECTROLUMINESCENT MESSAGE DISPLAY M.55
5.1.1.4. PRIMARY FLIGHT DISPLAY.....56
5.1.1.5. ALTITUDE AND FLIGHT PATH ANGLE SELEC.57
5.1.2. AUTOPILOT/FLIGHT DIRECTOR ALGORITHMS.....58
5.1.2.1. AUTOPILOT/FLIGHT DIRECTOR MODE LOGIC.58
5.1.2.2. THE SYSTEM STATE MACHINE.....59
5.1.2.3. THE LATERAL MODES.....61
5.1.2.4. THE SPEED MODES.....67
5.1.2.5. THE VERTICAL MODES.....71
5.1.3. AUTOPILOT/FLIGHT DIRECTOR SYSTEM INTERFACES...99
5.2. NAVIGATION/FLIGHT PLANNING FUNCTION.....99
5.2.1. NAVIGATION/FLIGHT PLANNING CONTROLS AND DISPL.99
5.2.1.1. NAVIGATION/FLIGHT PLANNING CDU CONTR.99
5.2.1.2. NAVIGATION/FLIGHT PLANNING CDU.....109
5.2.1.3. NAVIGATION/FLIGHT PLANNING HSD CONT.111
5.2.2. NAVIGATION/FLIGHT PLANNING ALGORITHMS.....114
5.2.3. NAVIGATION/FLIGHT PLANNING FUNCTION INTERFAC.123
5.3. VERTICAL NAVIGATION (VNAV) FUNCTION.....125
5.4. FLIGHT WARNING/ADVISORY FUNCTION.....125
5.4.1. ENGINE/TRANSMISSION MONITORING.....130
5.4.1.1. EXHAUST GAS TEMPERATURE.....130
5.4.1.2. ENGINE OIL TEMPERATURE.....130
5.4.1.3. ENGINE OIL PRESSURE.....131
5.4.1.4. TRANSMISSION OIL TEMPERATURE.....131
5.4.1.5. TRANSMISSION OIL PRESSURE.....131
5.4.1.6. ROTOR TACHOMETER.....132

LIST OF FIGURES

3-1: UH-1H CONTROL PANEL AND CONTROL PANEL LAYOUT.....6
3-2: ROTORCRAFT DIGITAL ADVANCED AVIONICS SYSTEM ARCHITECTURE .9
3-3: RODAAS SYSTEM DIAGRAM.....11
3-4: SELECTED RODAAS HARDWARE.....13
3-5: RODAAS RADIO TUNING SYSTEM.....16
3-6: CYCLIC CONTROL AND SERVOACTUATORS.....19
3-7: DIRECTIONAL CONTROL AND SERVOACTUATORS.....20
3-8: COLLECTIVE CONTROL AND SERVOACTUATORS.....21
3-9: RODAAS SIMPLIFIED POWER DISTRIBUTION.....27

4-1: CONTROL DISPLAY UNIT (CDU).....29
4-2: CDU CHARACTER SET DEFINITION.....30
4-3: CDU DISPLAY PAGE FORMATS.....31
4-4: CDU DISPLAY PAGE FORMATS (Cont).....32
4-5: KEYBOARD LAYOUT.....33
4-6: RODAAS HORIZONTAL SITUATION DISPLAY (HSD).....39
4-7: PRIMARY FLIGHT AND HORIZONTAL SITUATION DISPLAY CONTROLS.43
4-8: RODAAS PRIMARY FLIGHT DISPLAY (PFD).....45
4-9: PFD DEPARTURE-CRUISE TRANSITION DISPLAYS.....47
4-10: PFD HOVER TRANSITION DISPLAYS.....48

5-1: AUTOPILOT/FLIGHT DIRECTOR CONTROLS AND DISPLAYS.....52
5-2: AUTOPILOT/FLIGHT DIRECTOR MODE CONTROLLER PANEL.....54
5-3: AUTOPILOT DUMP SWITCH.....55
5-4: ELECTROLUMINESCENT MODE ANNUNCIATOR PANEL.....56
5-5: ALTITUDE AND FLIGHT PATH ANGLE SELECTOR.....57
5-6: RODAAS PRIMARY FLIGHT DISPLAY.....58
5-7: ABSTRACT MACHINE HIERARCHY.....59
5-8: THE SOFTWARE MACHINES.....60
5-9: RODAAS COLLECTIVE AXIS CONTROL LAWS.....77
5-10: RODAAS PITCH AXIS CONTROL LAWS.....78
5-11: RODAAS ROLL AXIS CONTROL LAWS.....79
5-12: RODAAS YAW AXIS CONTROL LAWS.....80
5-13: AUTOPILOT/FLIGHT DIRECTOR INTERFACES.....100
5-14: NAVIGATION/FLIGHT PLANNING FUNCTION CONTROLS AND DISPL.102
5-15: NAVIGATION/FLIGHT PLANNING CDU CONTROLS.....110
5-16: NAVIGATION/FLIGHT PLANNING HSD DISPLAY FORMATS.....112
5-17: KALMAN FILTER, SIMPLIFIED FORM.....115
5-18: GROUND SPEED FILTERING (PROPOSED).....116
5-19: NAVIGATION KALMAN FILTER MECHANIZATION.....117
5-20: PLANE PROJECTION.....120
5-21: HSD MAP SLEW.....122
5-22: NAV/FLT PLANNING FUNCTION INTERFACES.....124
5-23: VNAV DISPLAYS.....126
5-24: RODAAS FLIGHT CAUTION CONTROLS AND DISPLAYS.....128
5-25: ALTITUDE ALERT FUNCTION ALERTING CRITERIA.....135
5-26: ALTITUDE ALERT CONTROLS AND DISPLAYS.....136
5-27: VNAV MODE ENGAGEMENT CRITERIA.....137
5-28: GMT CLOCK FUNCTION CDU CONTROLS AND DISPLAYS.....140
5-29: FUEL TOTALIZER FUNCTION CDU CONTROLS AND DISPLAYS.....141
5-30: WEIGHT AND BALANCE FUNCTION CDU CONTROLS AND DISPLAYS..142
5-31: TAKEOFF PERFORMANCE FUNCTION CDU CONTROLS AND DISPLAYS.145
5-32: CLIMB PERFORMANCE FUNCTION CDU CONTROLS AND DISPLAYS...147

5.4.1.7. ENGINE TACHOMETER.....132
5.4.1.8. GAS PRODUCER TACHOMETER.....132
5.4.1.9. TORQUE PRESSURE.....132
5.4.2. AIRCRAFT CONFIGURATION MONITORING.....132
5.4.3. PERFORMANCE WARNING.....133
5.4.4. BLADE STALL AND CONTROL AUTHORITY WARNING....133
5.4.5. ALTITUDE WARNINGS.....133
5.4.6. MARKER BEACON ADVISORY FUNCTION.....134
5.4.7. AUTOPILOT/FLIGHT DIRECTOR MONITORING, WARNIN.135
5.4.7.1. VNAV MODE MONITORING, WARNING.....135
5.4.7.2. MISCELLANEOUS AUTOPILOT/FLIGHT DIRE.138
5.4.8. BIT FAULT WARNING.....138
5.5. GMT CLOCK FUNCTION.....139
5.6. FUEL TOTALIZER FUNCTION.....139
5.7. WEIGHT AND BALANCE FUNCTION.....139
5.8. PERFORMANCE COMPUTATION FUNCTION.....139
5.8.1. TAKEOFF PERFORMANCE FUNCTION.....144
5.8.2. CLIMB PERFORMANCE FUNCTION.....144
5.8.3. CRUISE PERFORMANCE FUNCTION.....144
5.8.4. ARRIVAL PERFORMANCE FUNCTION.....144
5.9. DATA LINK SIMULATION FUNCTION.....153
5.10. RODAAS BUILT-IN TEST (BIT).....157
5.10.1. BIT CONTROLS AND DISPLAYS.....160
5.10.2. BIT MECHANIZATION.....162
5.10.3. SIMULATOR MODE.....168
5.11. CHECKLISTS, EMERGENCY PROCEDURES.....168

6. PILOT INSTRUMENT PANEL.....172

7. RODAAS SYSTEM INTERFACE.....174
7.1. COMPUTER I/O.....174
7.2. COMPUTER/CDU INTERFACE.....174
7.3. COMPUTER/HSD INTERFACE.....174
7.4. COMPUTER/RAU INTERFACE.....174
7.5. COMPUTER/PFD INTERFACE.....175
7.6. COMPUTER/IRS INTERFACE.....175

Appendices

A. INDEX.....182

5-33: CRUISE PERFORMANCE FUNCTION CDU CONTROLS AND DISPLAYS..149
5-34: ARRIVAL PERFORMANCE FUNCTION CDU CONTROLS AND DISPLAYS.151
5-35: DATA LINK SIMULATION CONTROLS AND DISPLAYS.....155
5-36: DATA LINK FUNCTION CDU CONTROLS AND DISPLAYS.....156
5-37: DATA LINK INFORMATION FLOW.....158
5-38: BIT CDU CONTROLS AND DISPLAYS.....161
5-39: RODAAS BITE HARDWARE LOGIC.....164
5-40: RODAAS AIRCRAFT SIMULATION.....169
5-41: CDU CHECKLISTS 170
5-42: CDU EMERGENCY PROCEDURES CHECKLISTS.....171

6-1: UH-1H CONTROL PANEL AND CONTROL PANEL LAYOUT.....173

LIST OF TABLES

4-1: CDU DATA ENTRY OPERATION ERROR MESSAGES.....37

5-1: SYSTEM STATE MACHINE.....62
5-2: SYSTEM STATE MACHINE (Cont).....63
5-3: LATERAL MODE LOGIC MACHINE.....68
5-4: SPEED MODE LOGIC MACHINE.....70
5-5: VERTICAL MODE LOGIC MACHINE.....76
5-6: NAVIGATION KALMAN FILTER GAINS.....118
5-7: FLIGHT WARNING SYSTEM.....129
5-8: DETERIORATED FUNCTION LEVEL.....130
5-9: EXHAUST GAS TEMPERATURE WARNING LOGIC AND MESSAGE.....131
5-10: AIRCRAFT CONFIGURATION MONITORING.....133
5-11: ALTITUDE REFERENCE AND ANNUNCIATION.....134
5-12: WEIGHT AND BALANCE FUNCTION ALGORITHMS.....143
5-13: TAKEOFF PERFORMANCE ALGORITHMS.....146
5-14: CLIMB PERFORMANCE ALGORITHMS.....148
5-15: CRUISE PERFORMANCE FUNCTION ALGORITHMS.....150
5-16: ARRIVAL PERFORMANCE FUNCTION ALGORITHMS.....152
5-17: RODAAS BIT MECHANIZATION.....159
5-18: RODAAS BIT TESTS.....165

7-1: RODAAS ANALOG INPUTS.....176
7-2: RODAAS ANALOG OUTPUTS.....177
7-3: RODAAS DISCRETE INPUTS.....178
7-4: RODAAS DISCRETE OUTPUTS.....179
7-5: ARINC 429 BUFFER DATA.....180

1. INTRODUCTION

The Rotorcraft Digital Advanced Avionics System (RODAAS) integrates a comprehensive set of rotorcraft avionics functions into an advanced hardware mechanization for rotorcraft pilot/system interface research. This document presents a functional definition of RODAAS. The emphasis is on description of function rather than implementation.

Major Sections of the document are:

RODAAS SYSTEM DESCRIPTION - This section contains block diagrams, descriptions of system and computer architecture and describes significant hardware elements.

MULTIFUNCTION CONTROLS AND DISPLAYS - The RODAAS Control Display Unit (CDU), the Primary Flight Display (PFD), and the Horizontal Situation Display (HSD) are described.

RODAAS SYSTEM FUNCTIONS - This section describes the functions that the RODAAS will perform. It is organized by function.

This functional definition is the basis for the RODAAS hardware and software design, hence any changes in the program hardware or system functions will be preceeded by the corresponding modification to this document.

2. RODAAS SYSTEM CONCEPT

In 1982 the NASA Ames Research Center completed a program to improve avionics for general aviation by applying new developments in computing and sensing devices. The overall objective of this Demonstration Advanced Avionics System (DAAS) Program was to improve the safety and dependability (schedule adherence) of general aviation single pilot IFR operations without increasing the required pilot training/experience by exploiting advanced technology in computers, busing, displays and integrated systems design. The program resulted in the development and flight evaluation of an integrated suite of advanced avionics, DAAS, with a unique architecture that has the potential for high reliability with low weight, power and cost. These characteristics are especially important for rotorcraft, as is the requirement for single pilot IFR operations. Therefore, NASA initiated a procurement to duplicate the key DAAS avionics as a first step of a technology transfer from the general aviation program to the on-going rotorcraft program.

Although the basic DAAS hardware developed for general aviation aircraft is suitable for rotorcraft applications, some hardware revisions are required for rotorcraft. Therefore, a detailed description of the rotorcraft functions is required so that the DAAS hardware and software can be taylored to the rotorcraft scenario. To simplify the transition of the DAAS hardware and software from fixed wing aircraft to rotorcraft and to exploit the unique capabilities of rotorcraft, the RODAAS implementation has been planned in four phases, and the hardware is partitioned into four parts corrresponding to these four phases. This document provides the functional description for the rotorcraft hardware and software functions that provide the candidate rotorcraft with the basic DAAS functional capability through the aircraft installation phase (phase II). Subsequent hardware and software modifications/additions are planned for the remaining phases. At the beginning of each phase this document will be revised to reflect the status of each phase.

3. RODAAS SYSTEM DESCRIPTION

The RODAAS is an integrated system. It performs a broad range of rotorcraft avionics functions using one distributed computer system, and shared controls and displays.

This section introduces the RODAAS function set, and describes the system architecture and its components to provide background for the detailed function definition of subsequent sections.

3.1. RODAAS FUNCTIONS

RODAAS Functions include:

Autopilot/Flight Director Modes

- Go-Around
- Pitch/Roll/Collective Trim
- Altitude
  - Altitude Select
  - Altitude Hold
- Vertical Navigation (VNAV)
- Flight Path Angle
  - FPA Select
  - FPA Hold
- Heading Hold
- Heading Select
- Navigation (NAV)
- Approach (APPR)
  - Glideslope
  - Lateral Beam Following
- Hover Hold
- Airspeed
  - IAS Select
  - IAS Hold
- Stability/Control Augmentation System

Navigation/Flight Planning

- VOR, DME, TACAN, RNAV/INS Transponder
- Global Positioning System (Future expansion capability)
- 25 Waypoints, 15 Navaid Storage

Flight Warning/Advisory System

- Engine Parameter Monitoring/Recording (Instrument Statistics, Chip Detectors, etc.)
- Transmission Monitoring (Oil Pressure, Oil/Bearing Temps, Chip Detector)
- Rotor Speed Monitoring
- Aircraft Configuration
- Marker Beacon Advisory
- Airspeed Monitoring
- Autopilot/Flight Director Monitoring
- Bit Fault/Warning Recording

Horizontal Situation Display Presentations

- North Up Map
- Heading Up Map
- Hover
- Weather Radar
- Tactical (Future)

Primary Flight Display Presentations

- Forward Speed Modes
- Hover

GMT Clock Function

Fuel Totalizer Function

Weight and Balance Computations

Performance Computations

- Takeoff Performance
- Climb Performance
- Cruise Performance
- Arrival Performance

Data Link (Future expansion capability)

BIT (Built in Test)

Normal, Emergency Checklists

The autopilot is digital. The inner loops were developed under an earlier NASA Ames program and recoded for use in RODAAS. The outer loop equations are a mix of DAAS and NASA supplied material. The navigation/flight planning function computes aircraft position with respect to an entered flight plan by using an INS position blended with position information extracted from automatically tuned VOR, TACAN and DME receivers. (Global Positioning System Future).

RODAAS includes extensive monitoring, with warning capability. For example, the RODAAS system monitors engine performance, aircraft configuration with respect to flight condition, and informs the pilot of undesirable situations. The RODAAS computer serves as a GMT clock.

The fuel used value is obtained from fuel flow integration combined with capacitance gauge information.

The weight and balance calculations, and the takeoff, climb, cruise, and arrival performance calculations can be quickly and conveniently performed using RODAAS controls and displays.

The RODAAS system will determine fuel and time required to fly specific segment distances given altitude, temperature, wind data, and engine power setting or airspeed desired.

A Data Link simulation has been provided.

The RODAAS system will detect and localize its own faults via built-in-test (BIT). Provisions are also included for troubleshooting the RODAAS hardware through RODAAS controls and electronic displays.

Normal and emergency checklists are stored in the RODAAS computer, and are available for display at the push of a button.

These functions are managed via shared controls and displays,, and performed in the common RODAAS computer system.

The following is an introduction to the RODAAS controls and displays, computer system architecture, and a description of major RODAAS subsystems.

3.2. RODAAS CONTROLS AND DISPLAYS - GENERAL

The RODAAS system includes:

Controls and displays necessary to manage RODAAS functions.

Independent safety pilot instrument installation.

These controls and displays of the control panel are laid out as indicated in Figure 3-1. The RODAAS pilot is in the right seat, and the safety pilot is in the left seat. Electronic displays-the Horizontal Situation Display (HSD), the Primary Flight Display (PFD) and the Control Display Unit (CDU) - are key elements of the panel.

The HSD presents a moving map display showing rotorcraft position with respect to desired course. The display is a 4.5 inch by 4.5 inch monochromatic Ball Brothers 103C CRT raster display unit. The display unit has 256 by 256 dot matrix display capability. P43 phosphor is used together with an appropriate narrow band optical filter to allow operation in bright sunlight. The HSD is controlled by functional control buttons and a manual slew controller.

The Control Display Unit (CDU) is the pilot's primary means of interacting with RODAAS. Included are a keyboard at the bottom of the unit and a set of function buttons along the top. The function buttons include a set of page select buttons which determine the information that is displayed. Four menu select buttons are located on the left and right side of the CDU.

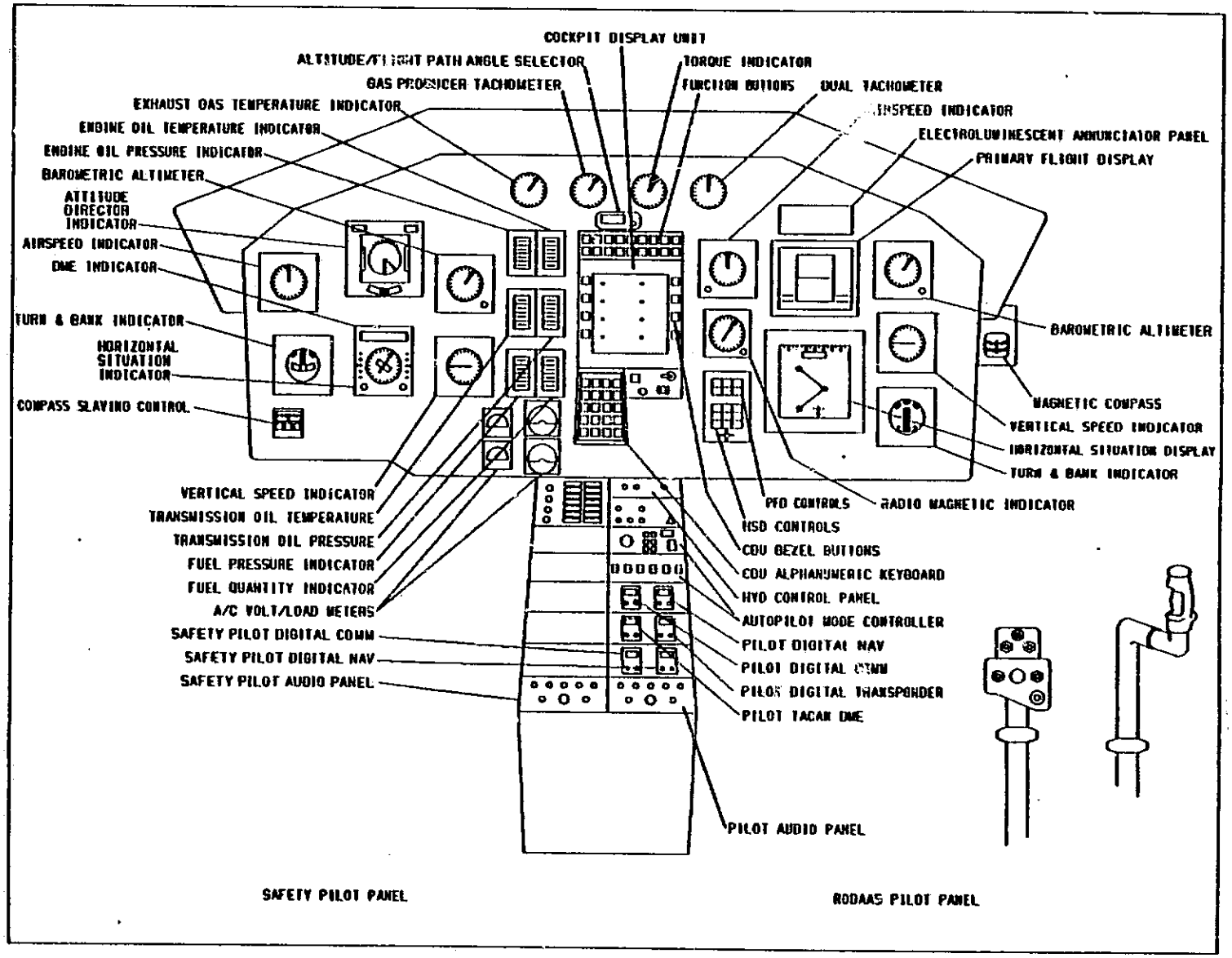

Figure 3-1: UH-1H CONTROL PANEL AND CONTROL PANEL LAYOUT

The CDU uses a Sharp Corporation electroluminescent (EL) graphic display. This thin-film EL display panel is known for it's high brightness and long life. It provides a clear, thin display area of 3.54 inch by 4.72 inch which has a viewing angle of greater than 120 degrees. The orange-yellow display color (peak wavelength 5850 A degrees) provides a brightness of 25 foot-lamberts without a filter.

The CDU can display 26 lines of 32 characters each. Line spacing is 0.25 inch, character height is 0.081 inch, and character width is 0.077 inch.

The PFD is a CRT built by Sperry and it will be made available for RODAAS by NASA. The display is used for vertical situation information and includes vehicle flight path.

The altimeter is an IDC Encoding Altimeter type 519-28702-571.

The vertical speed indicator presents rates of climb, or descent, in feet per minute.

The Indicated Airspeed indicator receives airspeed information via the basic aircraft pitot-static system. This airspeed information is considered unreliable below 40 to 50 knots.

The Low Range Airspeed System (LORAS) system provides accurate airspeed information to the PFD for the Hover task. It is suggested that consideration be given to replacing the current IAS Indicator with a LORAS Omni-Airspeed Indicator (OAI). For backup a smal 2 inch IAS Indicator using the pitot-static system can be mounted just above the OAI.

The RODAAS Autopilot Mode Controller is located on the center pedestal, and the Autopilot Mode Annunciator is located above the PFD.

RODAAS engine instruments are centrally located and are accessible to the RODAAS pilot and the safety pilot.

NAV Receivers are automatically tuned by RODAAS.

The safety pilot instrument set is independent from the RODAAS instruments, and adequate for safe instrument flight with RODAAS inoperative.

The safety pilot's Pictorial Navigation Indicator (PNI) displays aircraft magnetic heading (gyro-stabilized), selected heading and selected course. Also, VOR and localizer course deviation, glideslope deviation and a TO-FROM indication are presented.

The RMI displays vehicle heading, and the bearing to selected VOR and TACAN stations.

Aircraft master power controls and circuit breakers are located on the overhead switch and circuit breaker panels.

3.3. RODAAS SYSTEM ARCHITECTURE

The RODAAS system architecture is presented in Figure 3-2. The architecture is characterized by a modular computer system structure; i.e., multi-microprocessors interconnected by an IEEE 488 data bus. Each processor block in Figure 3-2, represents an Intel 8086 16-bit microprocessor, 2K by 16 UV-EPROM memory, and 4K by 16 to 16K by 16 RAM memory.

Each processor performs a function, and interfaces directly with the subsystems associated with that function. At power-on, the bus controller Central Computer (CC) CPU-1 takes functional programs from the nonvolatile EEPROM memory, and sequentially loads each processor at the rate of approximately 1 processor per second. When all processors are loaded, the bus controller activates the system. The bus controller then manages bus communications during normal operations.

There are four modification phases indicated in Figure 3-2. The phase 0 package provides a repartitioned DAAS system to achieve the architecture pictured. The autopilot is also reprogrammed to control the UH-1H aircraft. In the second stage, phase I indicated by the dashed lines, will add the automatic radio tuning system, an external video input to the HSD, an electronic PFD and a Honeywell consigned Laser Inertial Navigation System (LINS) to the hardware already fabricated. Programming necessary to implement these changes will also be accomplished; i.e., navigation radio control and sensor conditioning. This document includes details on all modifications through phase II which includes the installation of RODAAS in a UH-1H rotorcraft. Phases III and IV provide RODAAS with more research flexability for NOE flight, voice and expanded navigation capability. These added features are included for reference in parts of this document.

A portable TI Silent 700 cassette unit or any other RS-232 compatible device can interface with the bus controller to allow load or modification of the functional software.

CC-CPU 5 is a spare processor. If processor CC-CPU 4 fails and the bus controller detects the failure, the bus controller will load CC-CPU 5 with appropriate software from EEPROM memory, and CC-CPU 5 will take over the function of the failed processor. Such reconfiguration could be extended to other processors such as CC-CPU 2, the autopilot. However, for such reconfiguration the spare processor must interface with autopilot subsystems, which requires additional multiplexing of hardware. Reconfiguration was thus applied only to a limited degree in this system.

The RODAAS architecture is modular. Functions can be added by adding necessary standard processor modules onto the 488 data bus, and interfacing these processor modules with the devices associated with the new function.

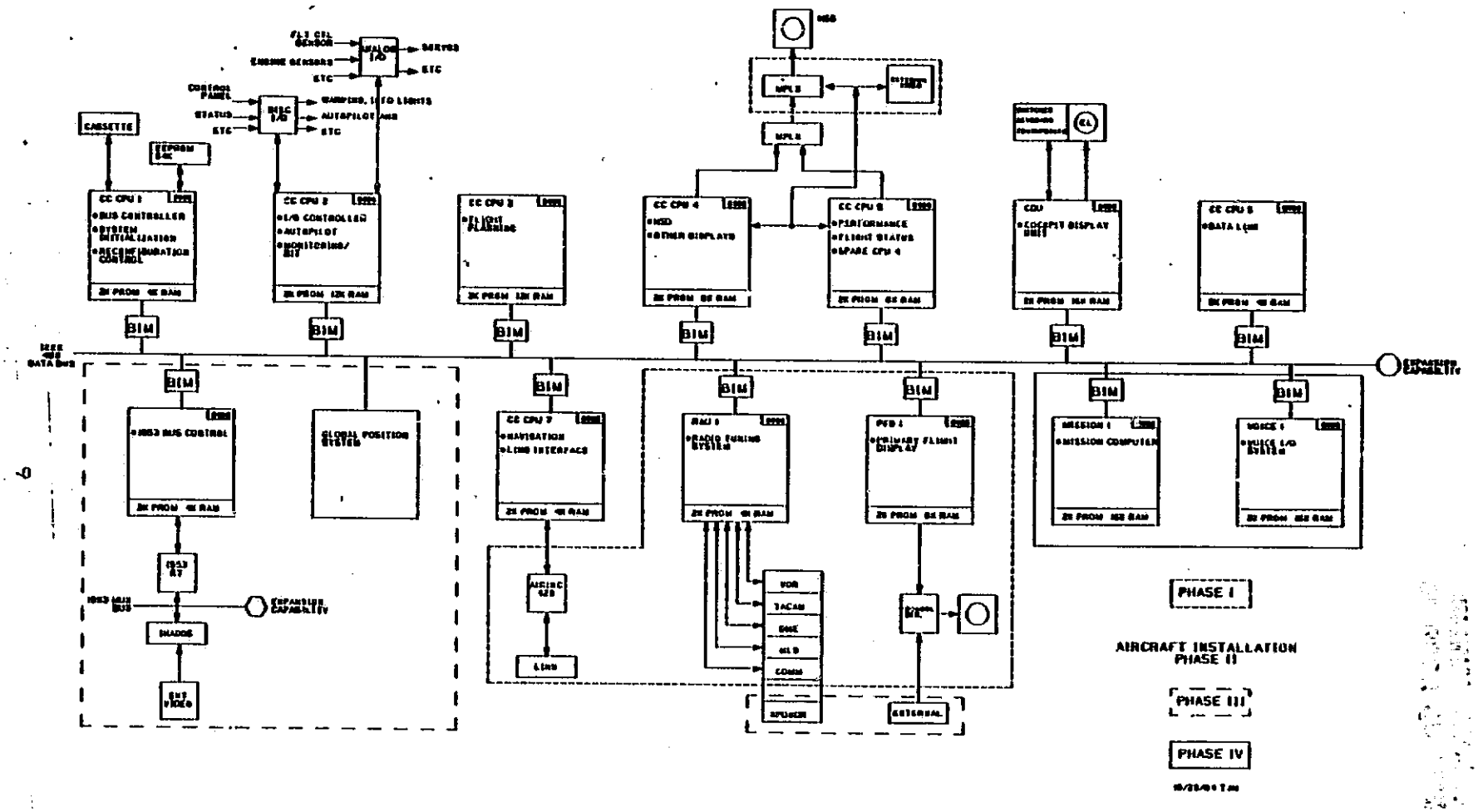

Figure 3-2: ROTORCRAFT DIGITAL ADVANCED AVIONICS SYSTEM ARCHITECTURE

(RODAAS)

Seven processors (phase 0) are contained in the RODAAS Central Computer Unit. One processor is contained in the CDU, and one processor is contained in the radio adapter unit.

3.4. RODAAS MAJOR SUBSYSTEMS

RODAAS system components, and their interconnections are depicted in Figure 3-3, RODAAS System Diagram. Interconnection between the RODAAS panel controls and displays, sensors, and the RODAAS computer system is shown. The RODAAS Central Computer obtains data from the radio system (radio adapter unit), flight control sensors, engine instruments, configuration status sensor, and CDU. Functional computations are performed on the input data and the results sent to the HSD, PFD, warning/caution annunciations, and autopilot servos.

Following is a description of the RODAAS major subsystems including:

- Central Computer Unit
- Radio System
- Flight Control Sensors, Servo Actuators
- Engine Sensors
- Configuration Monitor Sensors
- Data Link
- Ring Laser INS
- Miscellaneous Sensors

Selected devices are depicted in Figure 3-4.

3.4.1. CENTRAL COMPUTER UNIT

The central computer unit performs the functions of navigation, engine monitoring, flight control, weight and balance computations, performance computations and maintenance test.

The computer unit contains seven 16-bit, Intel 8086 microprocessors interconnected through an IEEE 488 data bus system.

Following is description of Central Computer elements including:

- Processor
- Input/Output
- EEPROM Memory System
- HSD Controller
- Power Supplies

3.4.1.1. CENTRAL COMPUTER PROCESSOR

The Central Computer processor, Figure 3-4, is designed to fit on a single module. The 8086 Microprocessor, 4k RAM, 2k UV-EPROM, interrupt controller, clock, memory chip-select logic, bus-buffer logic, and 488 bus interface are included on the processor module.

Figure 3-3: RODAAS SYSTEM DIAGRAM

ORIGINAL PAGE IS
OF POOR QUALITY

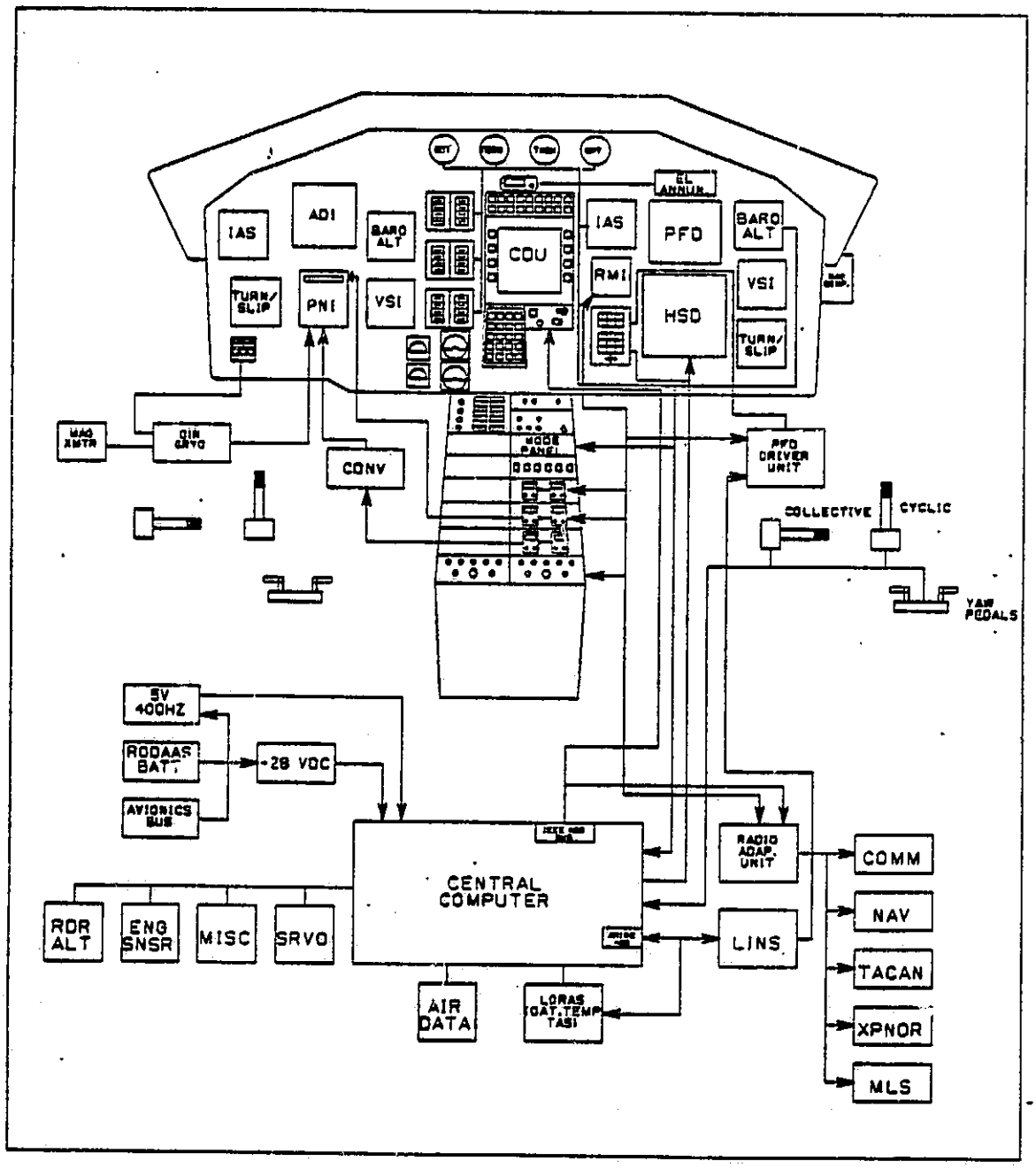

The 8086 is a 16-bit integer microcomputer. It contains four 16-bit index registers. The processor chip can address up to 1 megabyte of memory. The processor has adequate throughput, and PLM higher order language compiler is available.

Each processor module has a 2k x 16 UV-PROM and 4k x 16 to 16k x 16 RAM memory. Software required to load each processor RAM is located in the UV-PROM

Ultraviolet eraseable PROM is implemented using the 2k x 8, 2716 UV-EPROM device, and RAM is implemented using the 4k x 1, 2141 part.

Analog and discrete I/O conversions, and IEEE 488 data bus transactions are controlled directly by the 8086 processor.

The Bus Interface Module (BIM) between the Intel 8086 Microcomputers and the IEEE 488 Data Bus is implemented using a TMS 9914 Talker/Listener chip, and 75160 and 75161 bus drivers. The TMS 9914 is designed to perform the interface function between an IEEE 488 bus and a microprocessor. IEEE 488 standard protocol is handled automatically in Talker, Listener, or Controller operational modes.

3.4.1.2. CENTRAL COMPUTER INPUT/OUTPUT

The central computer unit contains input/output (I/O) and control circuitry which is summarized as follows:

- 64 Discrete Input Channels
- 48 Discrete Output Channels
- 64 Analog A/D Input Channels
- 16 Analog Output Channels
- 1 Video Output to HSD-CRT
- 6 AC input signal conversions including a demodulator controller, 1 Scott-T transformer, and 5 demodulators.
- 1 Hardware Real-time-clock counter
- 1 I/O control logic, including BIT logic circuitry
- 1 Master clear detection and timing circuit and other special power handling circuitry.

3.4.1.3. EEPROM MEMORY SYSTEM

The Intel 2816 Electrically Eraseable PROM (EEPROM) is used for the nonvolatile mass storage in the central computer unit. This EEPROM memory system consists of two card assemblies containing a total of 48 EEPROM devices, with expansion capability to 64 devices. The mass storage, which is accessed by using a bank select arrangement, gives the system a base of 786 kilobits with expansion to 1 megabit.

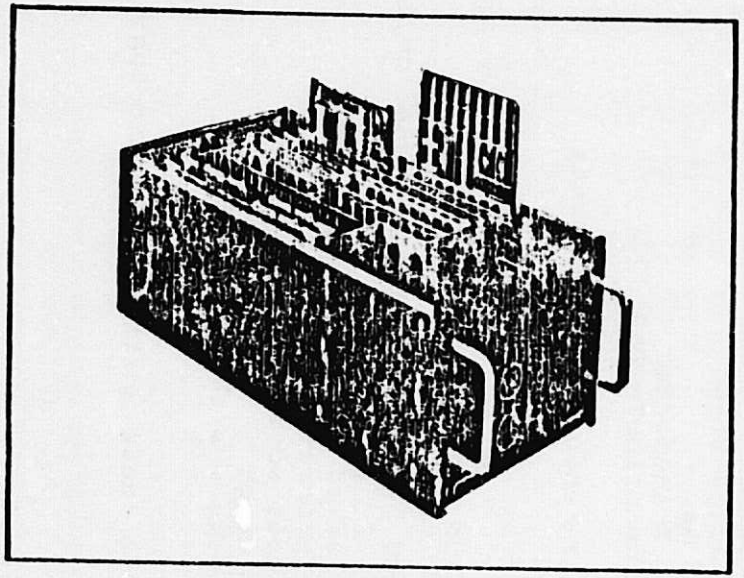

CENTRAL COMPUTER

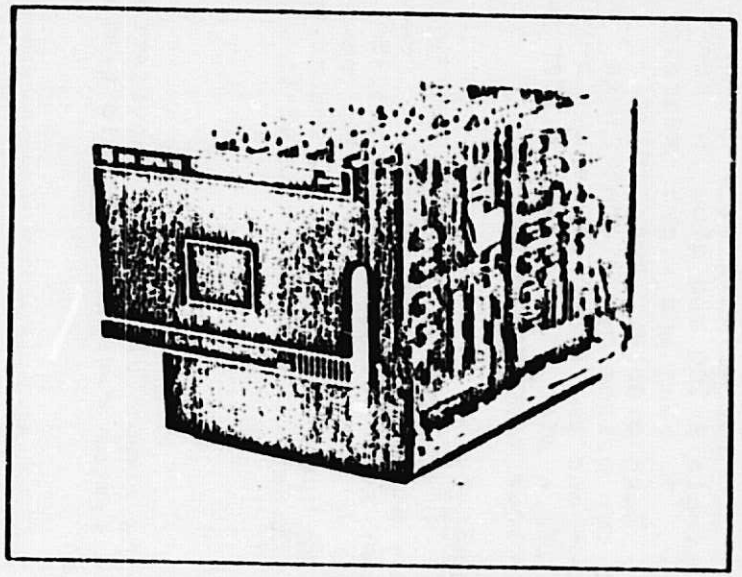

RADIO ADAPTER UNIT

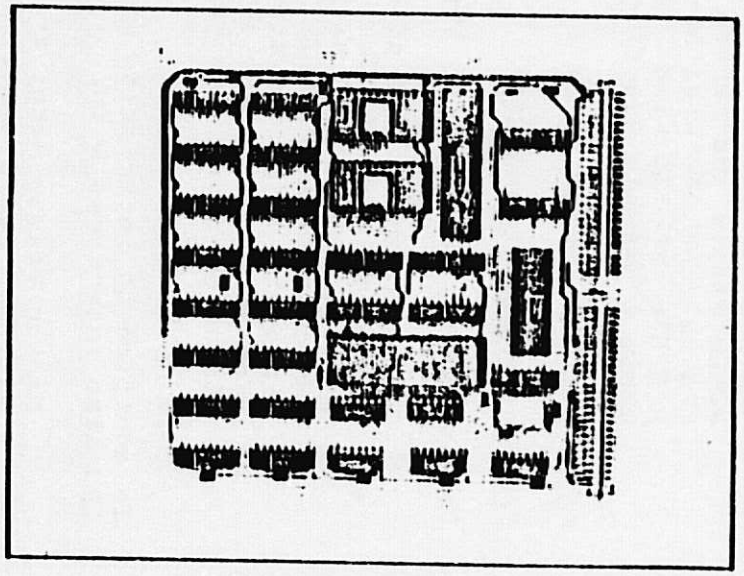

PROCESSOR MODULE

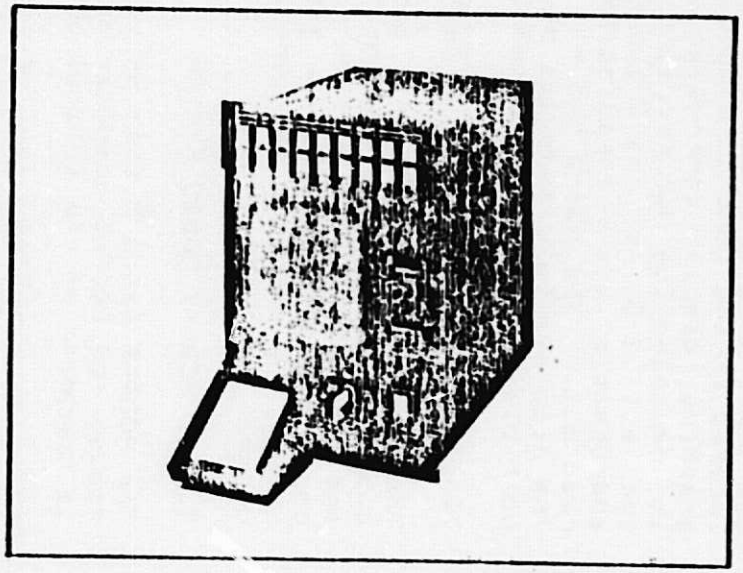

CDU

Figure 3-4: SELECTED RODAAS HARDWARE

ORIGINAL PAGE IS
OF POOR QUALITY

ORIGINAL PAGE IS
OF POOR QUALITY

3.4.1.4. HSD DISPLAY CONTROLLER

The HSD display is controlled by ALT-512 display controller located in the central computer unit. The ALT-512 is a complete graphics display controller on a single S-100 bus plug in board. It contains its own refresh memory, TV sync and video generator, and all I/O for the S-100 bus. Each display dot (pixel) is addressable via X-Y registers and can either be written into or read out. The board has six output and two input ports built-in. The display field consists of two 256 x 256 x 1 planes. Either or both planes can be displayed in various combinations.

3.4.1.5. CENTRAL COMPUTER POWER SUPPLIES

The Central Computer Unit contains system power supplies. Power supplies convert 28 Vdc input power to 5 Vdc (Abbott BN100D-5A), and to 15 Vdc (Abbott BBN50D-15A). A 115 volt, 400 Hz power conversion is included for ± 21 Vdc (unregulated) and 26 Vac power needs. A master clear generation circuit is also included in the central computer unit.

3.4.2. RODAAS RADIO SYSTEM

The RODAAS Radio System provides the communication and navigation radios for RODAAS computer and the system radios. The radio system is composed of the following units:

Radio Tuning CPU
KFS 598/KTR 908 King Digital Comm
Audio Panels and Marker Beacon Receiver
KFS 564/KNR 634 King Digital Nav
KFS 576/KXP 756 King Digital Transponder
Gable G3849/KTU 709 King TACAN AZIMUTH/DME

Following is a description of these radio system elements.

3.4.2.1. RADIO TUNING CPU

The functions performed by the radio tuning CPU include:

- Tune the radios as commanded by the navigation system or the operator via the CDU
- Process VOR/LOC/GS data received from the digital NAV
- Process TACAN AZIMUTH/DME information
- Generate a radio system status word
- Format all data for system usage
- Exchange tuning and radio data via the IEEE-488 bus

In addition to interfacing with the radio units, the radio tuning CPU also interfaces with:

Marker Beacon Receiver
Auto/Man Radio System Tune Switch
NAV/TACAN Bearing Select Switch

Complete pilot control in a manual mode of operation is assured by the manual position. A system interface diagram is presented in Figure 3-5.

The RODAAS radio tuning system uses the processor assembly similar to those found in the central computer unit to provide a flexible interface for control and data processing. Communication with the central computer is achieved via the IEEE 488 bus. The radio tuning processor receives tuning frequencies from the flight planning CPU and sends them to the appropriate radios. The received navigation data is processed and stored for bus transfer. Radio information is exchanged on the 488 bus at a fixed rate.

The Radio Tuning System provides monitoring of the VOR, TACAN, localizer, DME and glideslope signals to verify that a useable signal is being received. Valid flags associated with each of these signals are sent to the RODAAS system via the radio system status word, to ensure an inoperative signal is not used for aircraft control. The marker beacon receiver is also monitored and reception of inner, middle and outer markers shall be indicated to the RODAAS complex.

The KNR 634 Digital NAV provides a video composite with either VOR or LOC information modulated onto the 9960 HZ subcarrier, the interface circuit identifies what type of information is present, demodulates the composite, and digitizes the result. Glideslope information is also available from the KNR 634 receiver. The signal will be conditioned in the interface for digital conversion.

The radio tuning system has the capability to tune the KTR 908, KNR 634, and KTU 709 remote radios. The interface will simulate the actions of the front panel rotary knobs by closing increment/decrement switches electronically to change frequency. The standby frequency only is affected by the tuning process. To change the active channel, the standby is tuned to the selected frequency and an active/standby exchange is executed. The approximate worst case tuning time for a NAV or COMM sweep full band is 250 milliseconds. To execute an active/standby exchange, approximately 50 milliseconds is required. For the transponder and TACAN DME receivers, approximately 250 milliseconds should be required for tuning and valid data acquisition.

3.4.2.2. COMMUNICATION RADIO

The RODAAS Communication Radio is the King Gold Crown III KTR 908 remote mounted unit and the KFS 598 panel mounted frequency selector. The remote unit will be mounted in the electronics bay, while the frequency selector will be located in the pedestal (see Figure 3-1). The KFS 598 has standby and active frequency storage capability. It tunes a frequency range from 118.0 to 135.975 MHZ in 25 KHZ increments. Automatic squelch with manual override on the frequency selector is also provided.

Figure 3-5: RODAAS RADIO TUNING SYSTEM

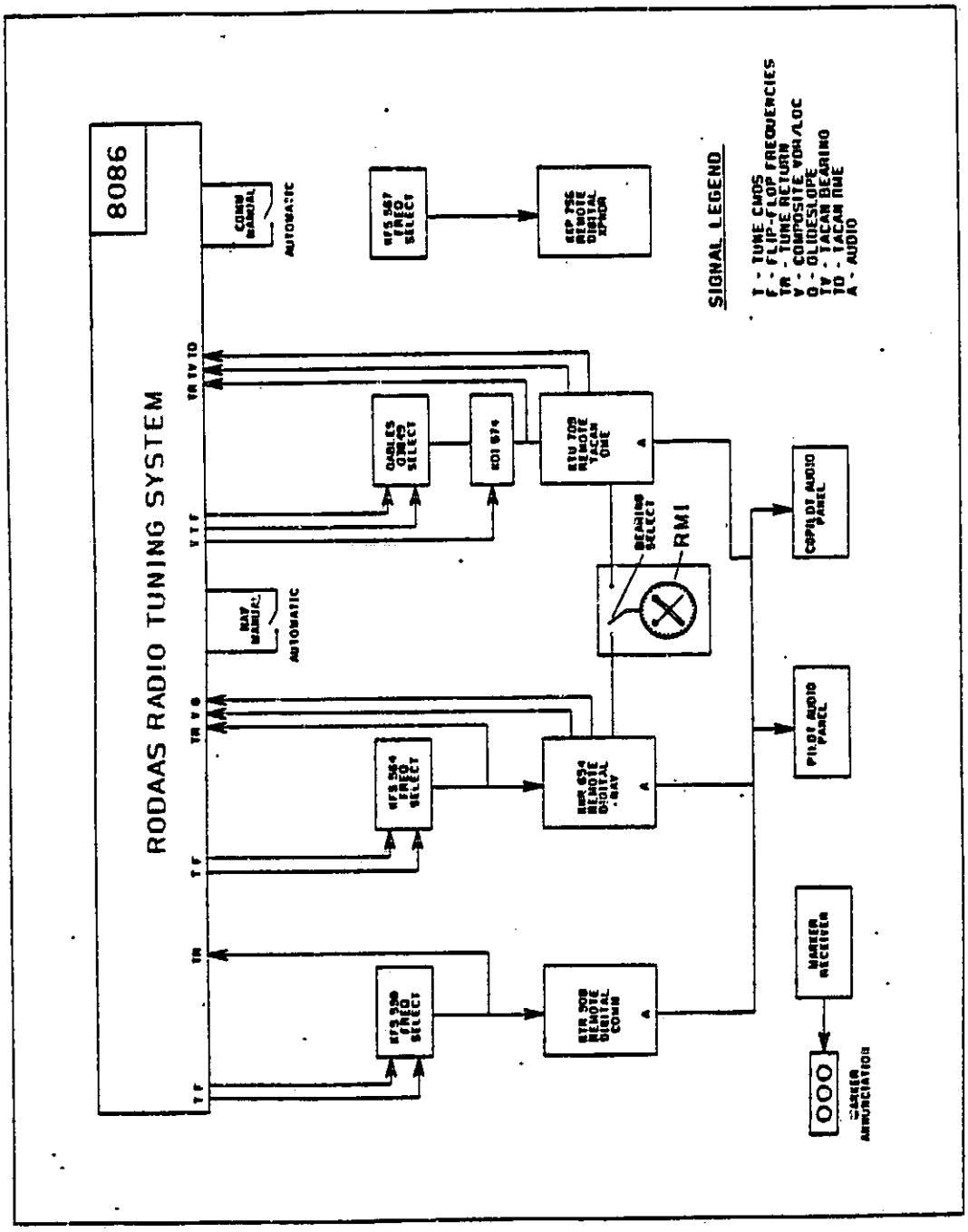

ORIGINAL PAGE IS
OF POOR QUALITY

3.4.2.3. NAVIGATION RADIO

The Navigation Radio is the King Gold Crown III KNR 634 remote mounted unit and the KFS 564 panel mounted frequency selector. The remote unit will be mounted in the electronics bay, while the frequency selector will be located in the pedestal (see Figure 3-1). Active and standby frequencies are stored and displayed in the KFS 564. Automatic channeling of a KDM 706 DME receiver is also provided by the KFC 564 frequency selector The VOR/LOC receiver tunes the frequency range 108.00 to 117.95 MHZ in 50 KHZ increments. The GS receiver is channeled from the localizer frequency selected. Forty channels of GS are available in the range of 329.15 to 335.00 MHZ at 150 KHZ increments. As with the comm transceiver, this receiver can be locally or remotely tuned.

3.4.2.4. TACAN

The KTU 709 remote TACAN Unit can be automatically or manually tuned. In automatic mode, it is channeled from the radio tuning system. The DME tunes 252 UHF channels, has a minimum output power of 250 watts and a sensitivity of -90 db minimum. The bearing component has an accuracy of ± 1 degree with a tracking rate of ± 20 degrees/second. In manual mode, the KTU 709 accepts tuning commands from the GABLES model G3849 TACAN control head.

3.4.2.5. TRANSPONDER

The KXP 756 Digital Transponder is a King Gold Crown III remotely mounted unit. It transmits on a frequency of 1090 MHZ ± 3 MHZ. Transmitter output power is 250 watts peak pulse. The receiver frequency is 1030 MHZ. The KXP 756 is remote tuned manually using the KFS 576 frequency selector and control head. This unit may be automatically tuned by the RODAAS system using the same techniques used on the NAV COMM and DME radios.

The KXP 756 is capable of locating the user through the air traffic control system. Range and azimuth are established by the return from the transponder's pulsed transmitter, in reply to a routine interrogation from the ground radar site. When used in conjunction with an encoding altimeter, the KXP 756 is capable of mode C operation, and can be used to convey altitude information.

3.4.3. FLIGHT CONTROL SENSORS, SERVOACTUATORS

The following flight control sensors, servoactuators are described below:

Encoding Altimeter (corrected altitude)
Autopilot Servoactuators
Ring Laser Inertial Navigation System (future)

3.4.3.1. ENCODING ALTIMETER

The encoding altimeter provides a pressure altitude signal to the Transponder and also a corrected altitude signal to the RODAAS computer. The corrected altitude signal is the primary RODAAS altitude reference. When pressure altitude is required it is computed from this signal and a pilot entered or automatically entered altimeter setting.

3.4.3.2. AUTOPILOT SERVOACTUATORS

The RODAAS autopilot servoactuators are currently undefined. However, a scheme similar to that shown in Figures 3-6, 3-7, and 3-8 could be employed.

The series servos are limited-authority, electrohydraulic position servos that produce additive position changes in the respective rotor blade pitch angles which are not reflected in stick or pedal positions. Hydraulic power is applied to the series servos by energizing the solenoid valve. With the hydraulic power on, the rate of linear motion is directionally proportional to the current through the transfer valve. With the hydraulic power off, the actuator is centered and locked in position, making the whole series servo a rigid link. The series servo package would contain LVDT's for sensing series actuator position that is required for servo loop closure and monitoring.

The parallel servos are electromechanical rate servos that act on the sticks, pedals and collective through the bungees to off-load the series servos. The servos have split shunt-type DC motors and a tachmeter for measuring rate for servo loop closure. Magnetic brakes in the servos prevent creep in manual mode, i.e., when auto or control stick steering not engaged. The servos have clutches which, when disengaged, remove the bungee forces from the sticks and pedals.

3.4.3.3. LASER INERTIAL REFERENCE SENSOR PACKAGE

The Laser IRS system provides a strapdown inertial system that performs all the computations related to position, course and attitude and velocities. It is a high accuracy reference system providing all attitude, body rates and heading data (magnetic and true) needed for flight instruments, navigation and autopilot inputs.

3.4.4. ENGINE SENSORS

The following engine information is sensed and supplied to the RODAAS Computer:

Exhaust Gas Temperature	Tail Rotor Chip Detector
Fuel Pressure	Engine Fuel Pump Inop.
Engine Oil Temperature	Right/Left Fuel Boost Pump
Engine Oil Pressure	Right Fuel Boost Pump OFF
Transmission Oil Pressure	Fuel Filter Clogged

Figure 3-6: CYCLIC CONTROL AND SERVOACTUATORS

ORIGINAL PAGE IS
OF POOR QUALITY

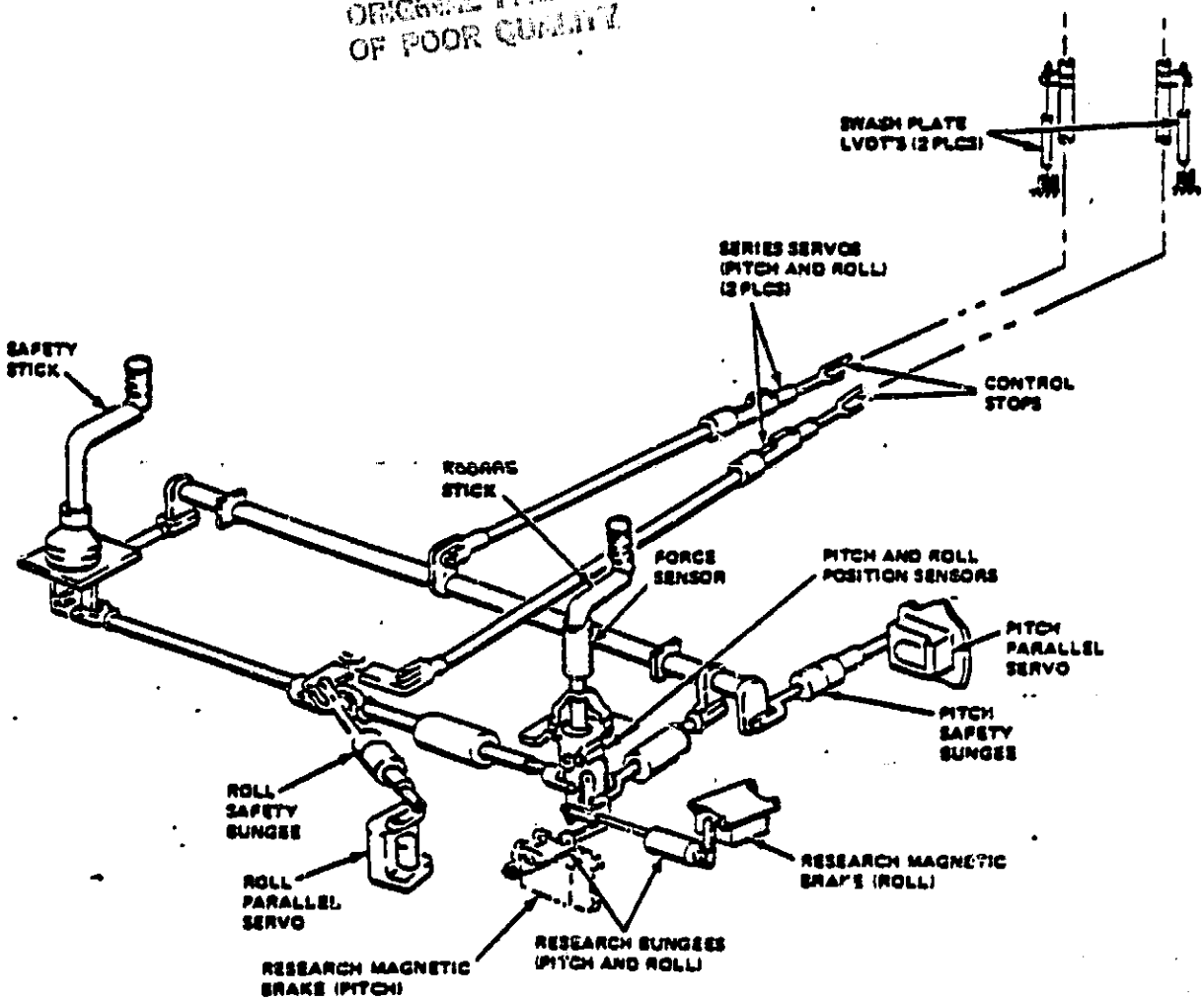

Figure 3-7: DIRECTIONAL CONTROL AND SERVOACTUATORS

ORIGINAL PAGE IS
OF POOR QUALITY

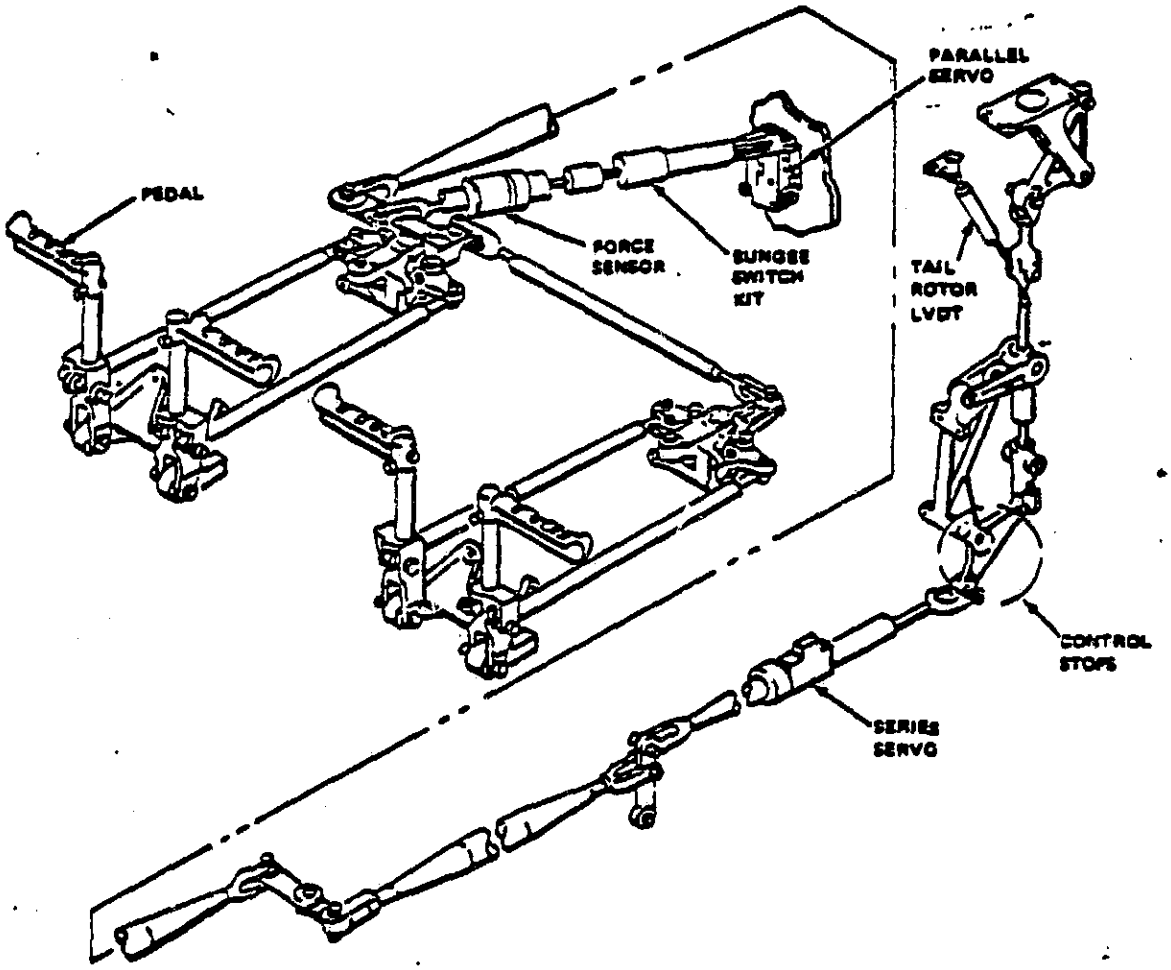

Figure 3-8: COLLECTIVE CONTROL AND SERVOACTUATORS

ORIGINAL PAGE IS
OF POOR QUALITY

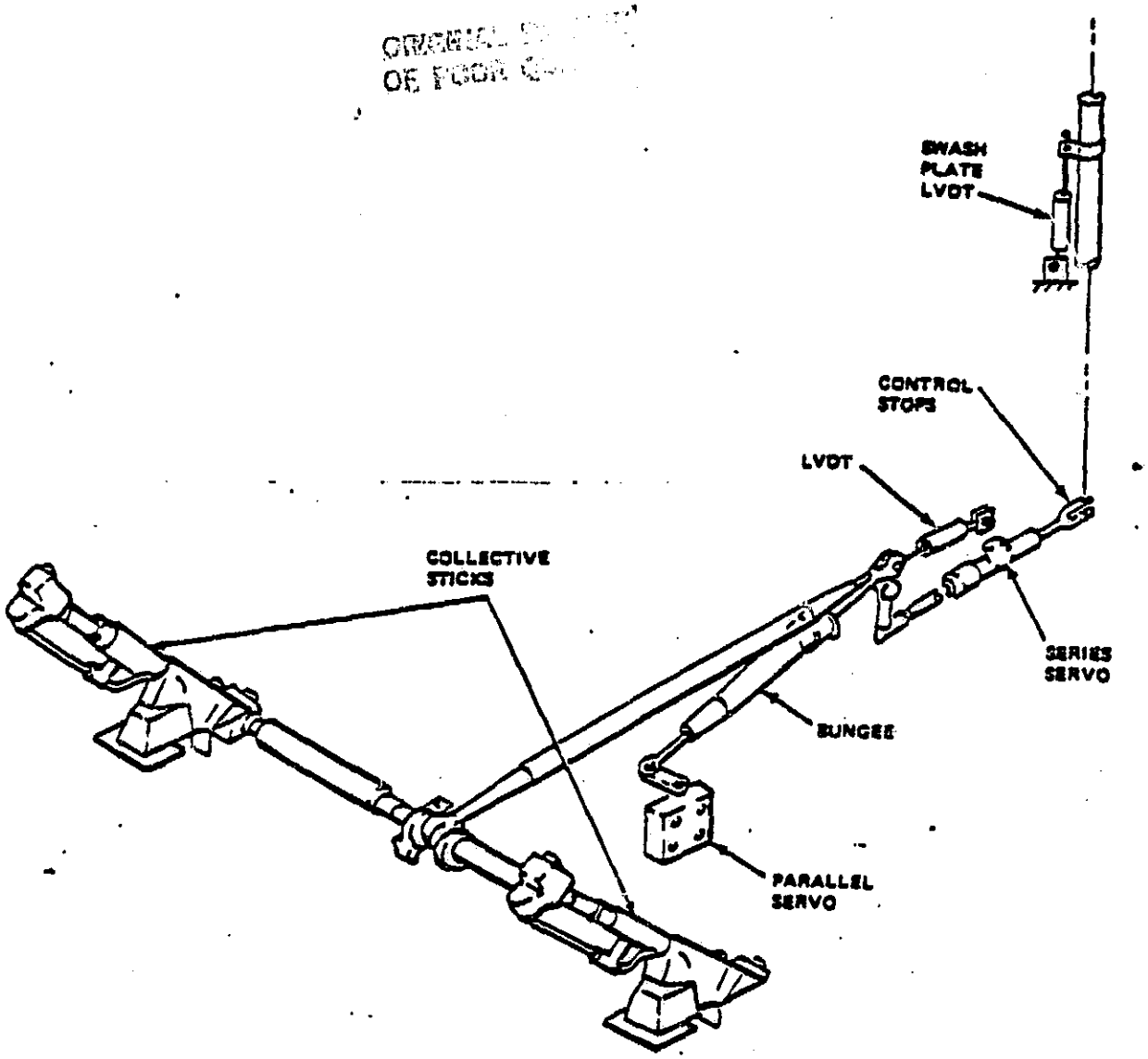

Transmission Oil Temperature	Engine Air Filter Clogged
Rotor Tachometer	Emer Fuel Control On
Engine Tachometer	Hydraulic Pressure Low
Gas Producer Tachometer	Fuel Quantity Low
Torque Pressure	Engine Ice Detector
Engine Chip Detector	Engine Ice Detector OFF
Engine Inlet Filter Clogged	Engine Fire Detector
Transmission Chip Detector	Fuel Flow Sensor

3.4.4.1. EXHAUST GAS TEMPERATURE

Temperature is taken from thermocouples mounted in the engine exhaust diffuser section forward of the tail pipe. No electrical power needed.

3.4.4.2. FUEL PRESSURE

Transmitter is located prior to main fuel filters and the engine driven fuel pumps.

3.4.4.3. ENGINE OIL TEMPERATURE

An electrical resistance type thermocouple measures temperatures of oil inlet to engine. Electrical power from the DC essential bus is required circuit protection is provided by a circuit breaker.

3.4.4.4. ENGINE OIL PRESSURE

The transmitter and indicator require electrical power which is supplied by the 28-volt AC system. A circuit breaker protection is provided.

3.4.4.5. TRANSMISSION OIL PRESSURE

The transmitter and indicator require electrical power which is supplied by the 28-volt AC system. A circuit breaker is provided for protection.

3.4.4.6. DUAL TACHOMETER

A dual tachometer indicates both engine and main rotor RPM. Power for the indicator is provided by tachometer generators on the engine and transmission. The system is self-generating; therefore, there is no connection from the helicopter's electrical system.

3.4.4.7. GAS PRODUCER TACHOMETER

The gas producer tachometer indicator registers RPM of the gas producer turbine and is self generating requiring no power from the helicopters electrical system.

3.4.4.8. TORQUE PRESSURE

The torque pressure transmitter is part of the engine oil system and indicates torque in pounds per square inch of torque imposed on the engine output shaft. Electrical power is required from the 28-volt AC supply. A circuit breaker protects the system.

3.4.4.9. ENGINE CHIP DETECTOR

A magnetic insert is installed in the oil system to detect metal particles. A circuit breaker protects the circuit.

3.4.4.10. ENGINE INLET FILTER CLOGGED

A differential pressure switch senses a clogged filter and provides the resulting discrete. The circuit is protected by a circuit breaker.

3.4.4.11. TRANSMISSION CHIP DETECTOR

Magnetic inserts in the drain plugs of the transmission sump, the intermediate (42 degree) tail rotor gear box and the tail rotor (90 degree) gear box. These plugs provide a means of inspecting for metal particles.

3.4.4.12. TAIL ROTOR CHIP DETECTOR

Same as Transmission Chip Detector.

3.4.4.13. ENGINE FUEL PUMP INDS

If either element of a dual engine driven fuel pump fails a differential pressure switch senses the failed element and provides the resulting discrete to the computer unit.

3.4.4.14. RIGHT/LEFT FUEL BOOST PUMP INDS

Pump failure is sensed by flow switches which close energizing the left or right pump caution discrete. Power is provided for switches from 28 volt DC essential bus. The circuits are protected by circuit breakers.

3.4.4.15. RIGHT FUEL BOOST PUMP OFF

No fuel flow is sensed and a warning discrete provided. Annunciation prior to engine start tells the pilot the circuit is functioning. Power is supplied by the 28 volt DS essential bus.

3.4.4.16. FUEL FILTER CLOGGED

A differential pressure switch senses a clogged filter and closes contacts provide the appropriate discrete. Power is supplied from the 28 volt DC essential bus. Circuit protection is provided by a circuit breaker.

3.4.4.17. ENGINE AIR FILTER CLOGGED

A differential pressure switch senses the clogged filter and provides the associated discrete to the computer unit. Power is supplied by the 28 volt DC essential bus. A circuit breaker protects the circuit.

3.4.4.18. EMER FUEL CONTROL ON

A discrete is provided to alert the pilot that the EMER FUEL control is on. Power is supplied from the 28 volt DC bus and circuit protection is provided by a circuit breaker.

3.4.4.19. HYDRAULIC PRESSURE LOW

A discrete indicating that the hydraulic pressure is low is provided by a pressure switch. Electrical power is supplied by the 28 volt DC essential bus. A circuit breaker protects the circuit.

3.4.4.20. FUEL QUANTITY LOW

A fuel quantity sensor in the left fuel tank turns on a discrete when 20 minutes of fuel remains in the tank. Power for the discrete is supplied by the 28 volt DC essential bus. The circuit is protected by a circuit breaker.

3.4.4.21. ENGINE ICE DETECTOR

The detector senses ice in the engine air intake and issues a discrete. The detector is supplied with electrical power from 28 volt DC essential bus. Circuit protection is provided by a circuit breaker.

3.4.4.22. ENGINE ICE DETECTOR OFF

The engine ice detector discrete indicates if the circuit breaker is out, the probe is clogged or when there is an electrical malfunction. Power is supplied from the 28 volt DC essential bus.

3.4.4.23. ENGINE FIRE DETECTOR

Fire detector units are strategically placed around the engine and attached to the engine cowling. The fire light and the detectors are supplied power by the 28 volt DC essential bus.

3.4.4.24. FUEL FLOW SENSOR

The RODAAS Fuel Flow Sensor is the Flo Scan 200 Turbine Flow Transducer.

Series 200 turbine flow transducers measure flows by hydrocarbon fuels such as gasoline, kerosene, and No. 2 diesel fuel and other light transmitting, non-corrosive liquids of similar viscosity.

The transducers give linear signals on gasoline across a 100-to-1 flow range down to 0.3 GPH. The transducers produce a current pulse signal from an opto-electronic pickup.

3.4.5. CONFIGURATION STATUS SENSORS

The following conditions are sensed and input to the RODAAS computer to be used for status correlation and displaying warning to the pilot as necessary.

CABIN DOORS - Switches are included to sense whether or not the doors are latched and secure.

BIT ENABLE - Ignition lock ,rotor RPM and throttle at stop are used to indicate on ground state. The BIT enable state is required to perform the built in test checks.

RADAR ALTITUDE - Radar altitude validity status monitoring is provided.

EXTERNAL POWER - Indication of external power connection is provided.

3.4.6. MISCELLANEOUS SENSORS

RODAAS True Airspeed (TAS), Outside Air Temperature (OAT), total airspeed and atmospheric pressure (millibar) are provided by a PACER LORAS (Low Range Airspeed Sensor) system.

3.4.6.1. TAS SENSOR

This output from the LORAS system provides accurate true airspeed from 0 KT to 200 KTS. with accuracies of ± 2 KTS to ± 4 KTS respectively.

3.4.6.2. OAT SENSOR

This output from the LORAS system provides temperature in degrees centigrade in the range -55 degrees C to +54 degrees C with an accuracy of ± 2 degrees C.

3.4.6.3. PRESSURE SENSOR

The pressure output of the LORAS system provides barometric pressure in the range of 400 mb to 1100 mb with an accuracy of ± 10 mb. (11.81 in to 32.48 in ± 0.3 in).

3.4.7. DATA LINK

A demonstration simulation for the Data Link is included in the RODAAS system. This function as described in paragraph 5.9, is mechanized in CC CPU-6 and interfaces with the CDU display.

3.5. RODAAS POWER DISTRIBUTION

The UH-1H power distribution system is illustrated in Figure 3-9.

The RODAAS power comes from the aircraft essential DC distribution bus and is backed up by a dedicated RODAAS battery, resulting in uninterrupted DC power.

When the RODAAS system circuit breaker is pulled, the RODAAS battery and correspondingly the RODAAS system, is disconnected from the aircraft bus so power cart or engine start transients are avoided. When the essential bus is powered, the RODAAS battery is connected and will be charged if it is low. The RODAAS system is diode coupled to the essential load distribution bus, so it is not used for starting and low-voltage transients will not propagate to the RODAAS system. The RODAAS battery may be disconnected from the essential bus at any time by pulling the RODAAS battery circuit breaker.

Aircraft and RODAAS power controls are located on the overhead switch panels. The RODAAS locking power switch is located on the right lower overhead switch panel. The guarded preflight-normal switch is located on the left lower overhead switch panel. The purpose of this switch is to allow the use of the RODAAS system for preflight flight planning with minimum battery drain. The RODAAS battery supplies the power for this function when the aircraft battery switch is off. With the RODAAS power switch ON and the preflight-normal switch in the PREFLIGHT position, the power is supplied only to the RODAAS computer, CDU, HSD, PFD and LINS. In the NORMAL position, power is also supplied to the servo actuators, mode select panel and RAU.

The overhead circuit breaker panel also provides circuit breakers to protect circuits associated with RODAAS components.

Figure 3-9: RODAAS SIMPLIFIED POWER DISTRIBUTION

ORIGINAL PAGE IS
OF POOR QUALITY

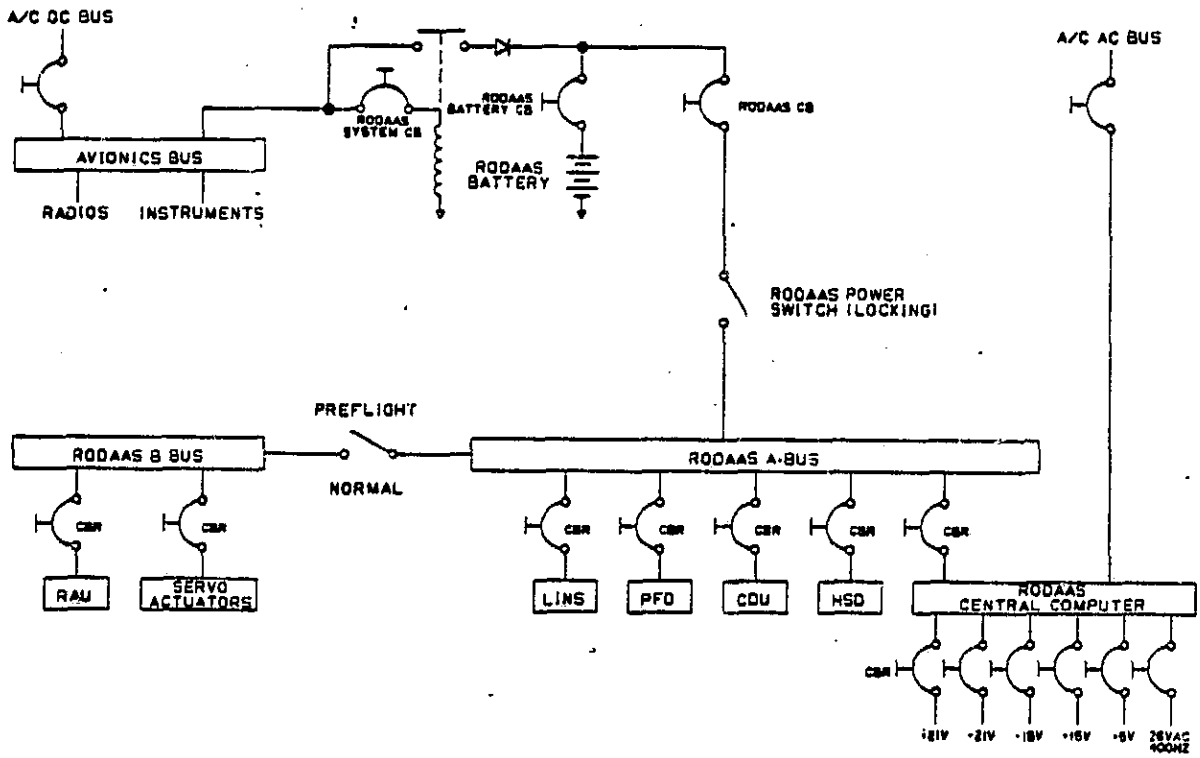

4. RODAAS MULTIFUNCTION CONTROLS AND DISPLAYS: CDU, HSD & PFD

The RODAAS system employs multifunction controls and electronic displays including a Control Display Unit (CDU), a Primary Flight Display (PFD) and a Horizontal Situation Display (HSD). These multifunction controls and displays are involved in many of the RODAAS functions and are thus introduced here preliminary to discussion of the individual functions in section 5.0.

4.1. CONTROL DISPLAY UNIT DESCRIPTION

The RODAAS CDU is shown in Figure 4-1. Two rows of push buttons located across the top of the device are 1) NAV function controls, and 2) display page select buttons. Data entry keyboard and special controls are located below the CDU display.

The following paragraphs provide a description of the CDU controls and displays.

4.1.1. NAV FUNCTION CONTROLS

The NAV function controls, located above the CDU display provide select commands to the navigation system. These selection commands are described more fully in section 5.0

4.1.2. PAGE SELECT BUTTONS

The page select buttons above the CDU display are used to call up various function display pages.

4.1.3. CONTROL UNIT DISPLAY

The CDU uses a Sharp Corporation electroluminescent (EL) graphic display. This advanced thin-film EL display panel is known for it's high brightness and long life. It provides a clear, thin display area of 3.54 inch by 4.72 inch which has a viewing angle of greater than 120 degrees. The orange-yellow display color (peak wavelength 5850 A degrees) provides a brightness of 25 foot-lamberts without a filter. The display general layout is shown in Figure 4-1.

The CDU can display 26 lines of 32 characters each. Available characters are presented in Figure 4-2. Line spacing is 0.25 inch, character height is 0.081 inch, and character width is 0.077 inch.

The display top line is reserved for the label or title of the page and the page number. The second line can be used for any desired text. The lower left hand corner, 10 characters wide is reserved for data entry scratchpad. The remainder of the lower two lines are reserved for warning and error messages.

ORIGINAL PAGE IS
OF POOR QUALITY

Figure 4-1: CONTROL DISPLAY UNIT (CDU)

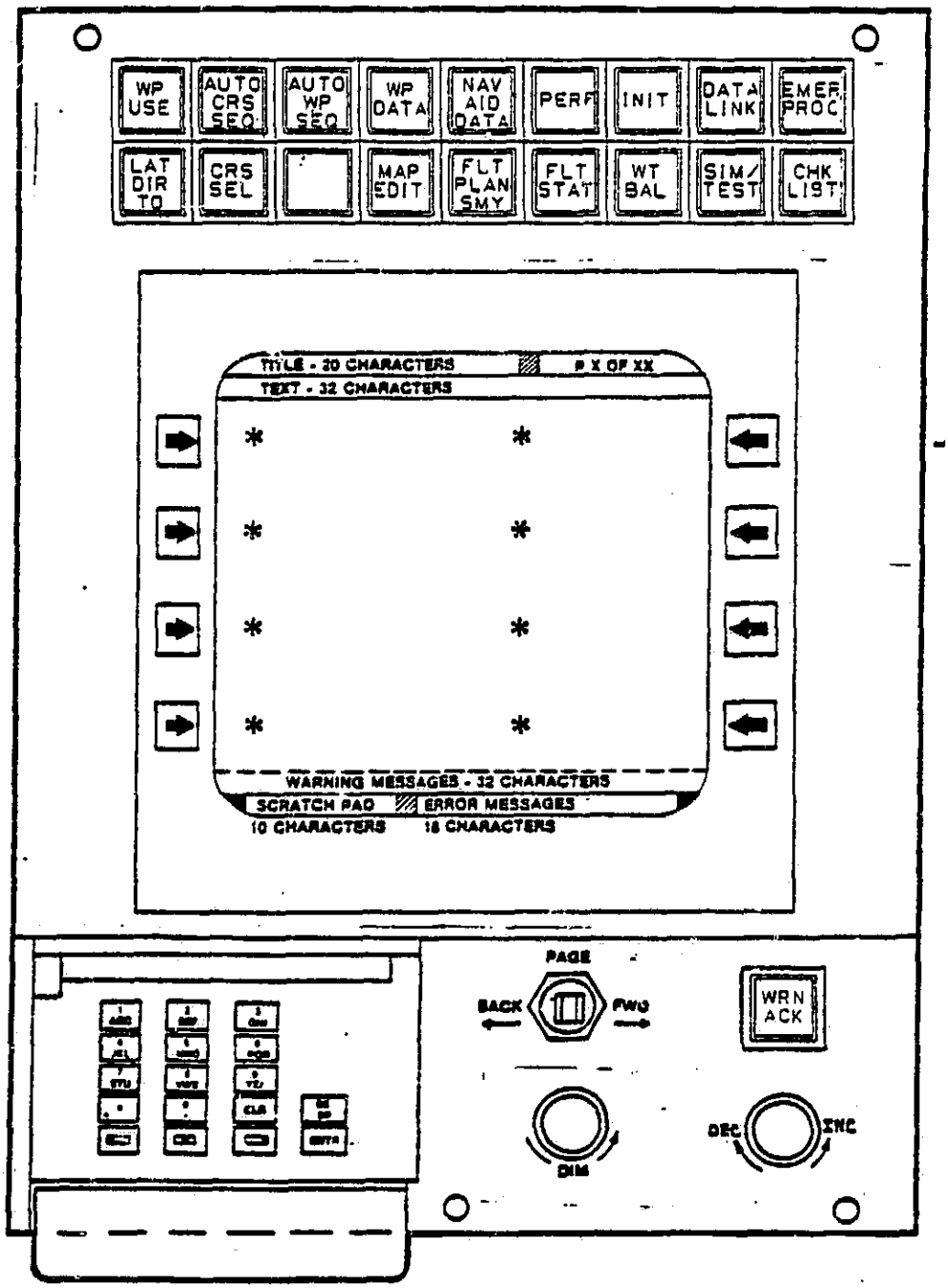

α	β	γ	δ	ε	ζ	η	θ	ι	κ	λ	μ	ν	ξ	ο	π
ρ	σ	τ	υ	φ	χ	ψ	ω	Ω	√	→	←	↑	÷	Σ	≈
	!	"	#	$	%	&	'	(	)	*	+	,	—	.	/
Ø	1	2	3	4	5	6	7	8	9	:	;	<	=	>	?
@	A	B	C	D	E	F	G	H	I	J	K	L	M	N	O
P	Q	R	S	T	U	V	W	X	Y	Z	[	\	]	⌒	_
'	a	b	c	d	e	f	g	h	i	j	k	l	m	n	o
p	q	r	s	t	u	v	w	x	y	z	{	¦	}	~	■

Figure 4-2: CDU CHARACTER SET DEFINITION

Standard page formats have been defined for the CDU display. These are shown in Figure 4-3 and discussed in section 4.1.7.

4.1.4. CDU BEZEL BUTTONS

The bezel pushbuttons use RE-AL TACTI-MEM membrane switches configured in a 1 X 4 layout. These buttons provide tactile feel and long life, while maintaining temperature resistance. The TACTI-MEM switches are mounted on the console using a pressure sensitive adhesive and if required, could be operate on a curved surface.

The bezel buttons are used in data entry and function or toggle switching. The bezel buttons and their touchpoint functions are independant and may be arranged in any format. These uses are discribed in later paragraphs.

Figure 4-3: CDU DISPLAY PAGE FORMATS

ORIGINAL PAGE IS
OF POOR QUALITY

```
                    ------------------------------------
                    .   LABEL-- 20 CHAR     P X OF XX .
                    .   TEXT -- 32 CHARACTERS         .
DUAL PARAMETER ---> .  * TEXT-12 CHAR  *              .
DATA ENTRY          .      DATA ENTRY                 .
                    .   -> 10 CHAR                    .
DATA ENTRY ------>  .  *                * FUNCTION SW .<---- FUNCTION
ARROW               .                     12 CHAR     .      SWITCH .
                    .                                 .
                    .  * TEXT-12 CHAR  *              .
FUNCTION ------>    .     SEL SELECT                  .
SWITCHING           .          7 CHAR                 .
                    .  *                * TOGGLE   SW .<---- TOGGLE
                    .                      10 CHAR    .      SWITCH
                    .                                 .
                    .  WARNINGS -- 32 CHARACTERS      .
                    . SCRATCHPAD    ERROR STATEMENTS .
                    ------------------------------------
```

CDU TOUCHPOINT DISPLAY - STANDARD FORMATS

```
                    ------------------------------------
                    .   LABEL-- 20 CHAR     P X OF XX .
                    .   TEXT -- 32 CHARACTERS         .
                    .  * WIND DIR/SPD  *              .
                    .         240 DEG                 .
                    .          20 KTS                 .
                    .  * GMT SET        * SYSTEM TEST .
                    .        0000         INITIATE    .
                    .                                 .
                    .  * CRS 1/CRS 2   *              .
                    .     SEL 200 DEG                 .
                    .         170 DEG                 .
                    .  *                * MDA OR DH   .
                    .                     > NO        .
                    .                       YES       .
                    .  WARNINGS -- 32 CHARACTERS      .
                    . SCRATCHPAD    ERROR STATEMENTS .
                    ------------------------------------
```

CDU TOUCHPOINT SWITCHING - EXAMPLES

Figure 4-4: CDU DISPLAY PAGE FORMATS (Cont)

```
LABEL 20 CHAR          P X OF XX
  TEXT  32 CHARACTERS
  19 CHARACTERS        9 CHAR
WARNINGS -- 32 CHARACTERS
SCRATCHPAD    ERROR STATEMENTS
```

CHECKLIST FORMAT

```
LABEL 20 CHAR          P X OF XX
 1 19 CHARACTERS       5 CHAR
 2
 3
 4
 5
 6
 7
 8
 9
10
11
12
WARNINGS -- 32 CHARACTERS
SCRATCHPAD    ERROR STATEMENTS
```

TABULATED DATA FORMAT

```
PRESTART ENG CHKLIST P 1 OF  2

SEATS AND PEDALS.....CHECKR
BELTS AND HARNESS....FASTEN
CNTRL FRICTIONS......OFF
FLIGHT CONTROLS......CHECK
AC BREAKERS..........IN
AVIONICS EQUIP.......OFF
GOV SWITCH...........AUTO
DE-ICE SWITCH........OFF
FUEL SWITCHES........OFF
HYD CONTROL..........ON
FORCE TRIM...........ON
SYSTEM INST..........CHECK
EXTERNAL POWER CONNECTED
```

CHECKLIST EXAMPLE

```
NAVAID SUMMARY         P 1 OF  2

NO  ID FREQ   LAT      LONG
 1 FGT 115.7 N4437.9 W09310.9
 2 GEP 117.3 N4513.6 W09320.5
 3 FCM 111.8 N4446.5 W09329.4
 4 MSP 110.3
 5
 6
 7
 8
 9
10
```

TABULATED DATA EXAMPLE

4.1.5. CDU KEYBOARD

The CDU keyboard, Figure 4-5, allows both alpha and numeric character entry. Each key has one numeral and three alpha characters. Alpha character entry requires two button pushes. First one must press the key with the triad of alpha characters that includes the desired alpha character, and then press one of the three post designation keys to select the 1st, 2nd, 3rd alpha character of the triad. The software assumes a numeric entry unless a post designator is pressed. Thus, no post designator is required for numeric entry. The three keys along the bottom are the post designators.

Back space, enter, and clear keys operate as follows:

BACKSPACE - Used to backspace in scratchpad (SPAD) data entry operation for error correction.

ENTER - Transfers data from scratchpad to entered data.

CLEAR - The action taken when the CLR entry key is depressed depends on the state of the CDU display when depressed.

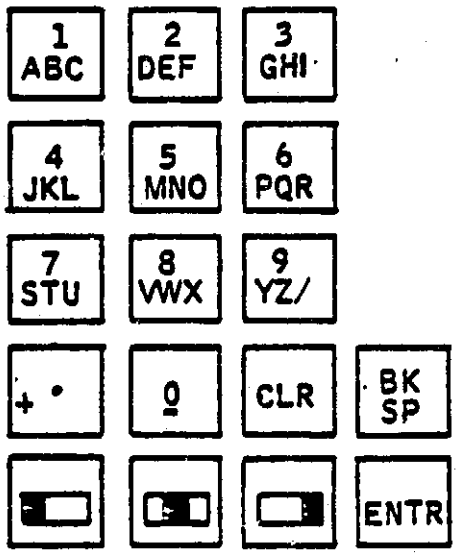

Figure 4-5: KEYBOARD LAYOUT

4.1.6. CDU MISCELLANEOUS CONTROLS

The four controls below the CDU display (Figure 4-1) have these functions:

BACK-FWD - Changes page selection to the previous page or the next page in a sequence. If the last in a sequence is encountered, a next page selection will call up the first page in the sequence.

WRN ACK - Used to acknowledge warning messages, remove the message, and extinguish the warning light.

DIM - The DIM control varies the light intensity for night lighting of the keyboard, all CDU NAV and page select buttons and the HSD control buttons.

DEC/INC - The DEC/INC control provides a means to decrement or increment a selected data entry variable. This allows the data variable to be changed rapidly without entering through the data entry keyboard. Units of increment/decrement are determined by the data position selected.

4.1.7. CDU DATA ENTRY

For pilot convenience, data entry on a page sequences automatically down the left side of the page and then down the right side. When the pilot touches a data entry touchpoint, a data entry arrow appears on the screen at the item to be entered. After the pilot enters that item, the arrow moves to the next data entry location. When all related data on the page is entered the arrow disappears. Data entry may also be accomplished in a random order supply by selecting the entry touchpoint and entering the desired data.

Data can be entered one parameter per touchpoint (single parameter data entry) or two parameters per touchpoint (dual parameter data entry). See Figure 4-3 and 4-4 for examples.

The touchpoints may also be used for activating functions or toggling between data items. For function switching a bezel button activates a function, eg., selects a page or selects a function. For toggling, activation of the touchpoint causes a "carrot" to toggle between the selected data items. For example, a touchpoint may toggle between MDA and DH active or not active mode.

4.1.7.1. <u>SINGLE PARAMETER DATA ENTRY</u>

Pressing a touchpoint will cause the arrow to point to the entry (see standard format, Figure 4-3). The current contents of the entry selected will be copied to the scratchpad. This data may then be slewed, using the DEC/INC knob. If data is entered via the keyboard, the scratch pad will be cleared and entered data will be displayed. To conclude entry, push the ENTR key. If the data is valid it will be entered.

If data is found to be not valid, the arrow stays and an error message is displayed. Entry of blanks will leave data in the variable space unchanged. Touching the same touchpoint again will cause the arrow to disappear.

If no entry is desired, depressing the keyboard clear button (CLR) with the scratchpad cleared will cause the entry to change to its power-up value.

When no entry arrow exists, no data entry error or system operation error message is displayed and the SPAD is clear, the CLR entry is ignored.

When a value exists in the SPAD, but no warning or error message exists, selection of the CLR entry will clear the SPAD, but leave the data entry arrow unaffected.

When a data entry error message exists along with the erroneous entry in SPAD, selection of the CLR entry will clear the SPAD and the error message, leave the entry arrow unaffected, and enable further entries.

When a system operation error message exists (discussed in a later paragraph), selection of the CLR entry key will clear the error message and enable further entries into the system.

4.1.7.2. DUAL PARAMETER DATA ENTRY

The touchpoint bezel button will produce an arrow (Figure 4-3) which will point to the first entry. It will toggle with subsequent touches.

Data is entered the same as for single parameter entry. On entry of the first parameter, the arrow will move to the second line. On entry of the second line, the arrow will proceed to the next data entry and entry is considered complete. Blanks will be a valid entry and will imply that data in the selected entry is not to be changed. "No entry" can be effected in the same way as stated above for single parameter data entry.

When a valid entry is made at a touchpoint, the entry will be transferred to its indicated position on the display.

The entry arrow automatically proceeds to the second data entry when the first entry is made. Entering data at the final dual parameter entry on a page clears the arrow.

4.1.7.3. DATA ENTRY GENERAL REQUIREMENTS

All data must be entered right justified. Digits will move from right to left as additional entries are made. A decimal point is assumed after the last character entered if no decimal point has been entered.

When you leave a set of pages and return, you will always go back to page 1 with the exception of the WP DATA page.

When a WP DATA page is selected by CDU push button, the waypoint data page corresponding to the active waypoint will appear. The scratchpad is cleared automatically each time the data entry arrow is moved.

Power-up values shall in general be zeros or nominal values. Xs are used if a specific objection to the use of zeros or nominal values is apparent.

4.1.7.4. DATA ENTRY ERRORS AND SYSTEM OPERATION DIAGNOSTICS

A data entry error is defined as an illegal entry made via the CDU keyboard/enter key or the DEC/INC knob. A system operation error is defined as an action that commands the system to assume an abnormal state.

Either type of error, if detected, generally will result in RODAAS rejecting the command that caused the error. A message will appear in the error statement portion of the CDU display upon pushing the ENTR key or improperly using a touchpoint. The error statement is cleared by depressing the CLR key which also clears the scratchpad and allows subsequent touchpoint or bezel button operations.

A data entry error is caused by keyboard entry of illegal characters, illegal format, invalid frequency, etc. An error message is displayed and the keyed-in value remains in the scratchpad. No system entry occurs.

A system operation error is the result of a touchpoint or push button selection when incomplete data exists or the system state is incompatible with that selection. For example, an attempt to use a waypoint that is not defined will result in no system action and an operation error diagnostic. In some cases, the entered data is accepted, and only an advisory message is displayed.

Entered data format errors result in a CDU message "DATA ENTRY ERROR", and disabling of CDU controls until the message is cleared. The following format errors are detected:

1) Too many characters to left of decimal point
2) Illegal characters; i.e., inappropriate alpha or numeric characters
3) Out of range entries; i.e., an entry which exceeds the parameters scaling limits.

Data entry errors and system operation errors are tabulated in Table 4-1.

Table 4-1: CDU DATA ENTRY OPERATION ERROR MESSAGES

FUNCTION, CDU PAGE	ERROR	MESSAGE
All functions, all pages	Entered data outside acceptable range, illegal format	DATA ENTRY ERROR
NAVAID DATA page	Invalid frequency entry. Magnetic variation faulty prefix	DATA ENTRY ERROR
NAVAID DATA page	Change in referenced data	*NAV USED IN WP DEF
WP DATA page	Invalid frequency entry	DATA ENTRY ERROR
	NAVAID number entered with no stored NAVAID data	NO NAVAID DATA
	RNAV mode select with LOC frequency	LOC FREQ SELECTED
MAP EDIT page	Start waypoint not located	WP NOT LOCATED
	Inserted waypoint exceeds 25	WP STORAGE LIMIT
	Active waypoint detected	ACTIVE WP
	Present position waypoint NAVAID not received	INVALID RADIO
	Waypoint resequence attempted with un-linked segments	INVALID FLT PLAN
WP USE button	USE attempted with incomplete waypoint data	WP NOT DEFINED
	USE attempted with AUTO CRS SEQ on and no Course 2 defined	*CRS 2 NOT DEFINED

CDU DATA ENTRY OPERATION ERROR MESSAGES (cont.)

FUNCTION, CDU PAGE	ERROR	MESSAGE
CRS SEL function	Selected course not defined	COURSE NOT DEFINED
AUTO CRS SEQ function	Course 2 not defined	CRS 2 NOT DEFINED
AUTO WP SEQ function	Next waypoint not defined	WP NOT DEFINED
LAT DIR TO function	Active waypoint ILS	LOC FREQ SELECTED
	Active waypoint incomplete (NAVAID or lat./long. missing	WP NOT DEFINED
DATA LINK function	Incomplete data request	DATA INCOMPLETE

* Advisory message only. Data accepted into system.

4.2. HORIZONTAL SITUATION DISPLAY DESCRIPTION

The HSD is presented in Figure 4-6. HSD controls are (Figure 4-7) located to the left of the display on the cockpit panel.

4.2.1. HSD DISPLAY

The general HSD display format is shown in Figure 4-6. The following paragraphs provide a general description of the displayed symbology.

The heading scale is located across the top of the display with markers for each 10 degree increment. Short markers are provided between the 10 degree marks for five degree heading increments. The letters N, S, E, and W are used for North, South, East and West headings, respectively.

The current magnetic heading of the aircraft is provided in the center of the display boxed by a rectangle. The heading is displayed as three digits. If any digit of a number on the heading scale starts to enter the area of the rectangle, that number on the heading scale will be blanked.

Figure 4-6: RODAAS HORIZONTAL SITUATION DISPLAY (HSD)

ORIGINAL PAGE IS
OF POOR QUALITY

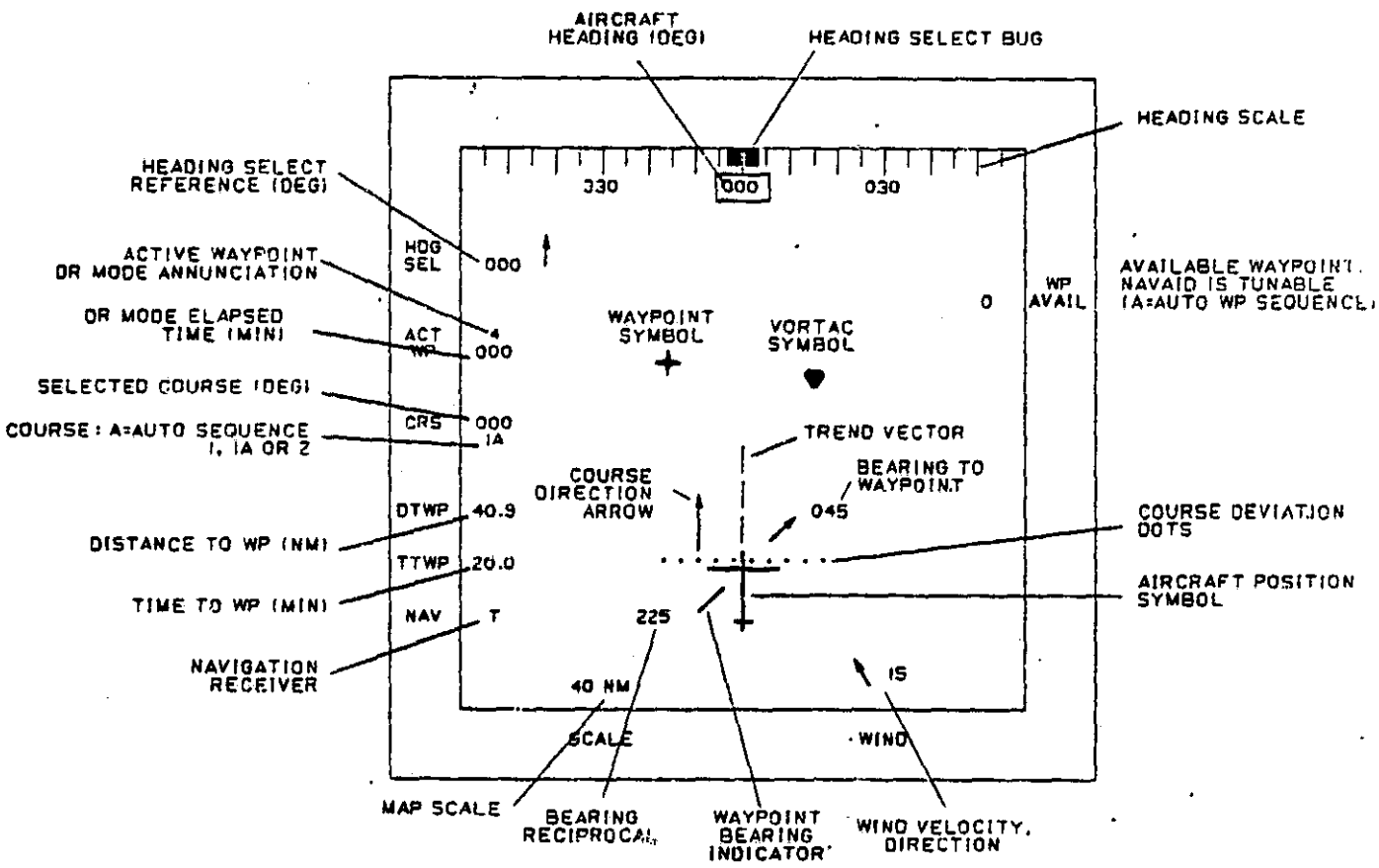

The selected heading is indicated by a heading bug, a digital readout and a heading select arrow. The heading selected is presented on the upper left side of the display in digital format. A heading select arrow is displayed to the right of the digital readout. HDG SEL is written on the bezel. The heading select bug is shown in Figure 4-6, just above the aircraft heading rectangle. When a heading is selected that is off the scale, one half of the heading bug will position itself on the side of the heading scale where the bug will appear as the aircraft turns to the selected heading.

The aircraft symbol is near the center of the display. The wing has a span of 0.5 inch and connects to a fuselage also of 0.5 inches. The aircraft symbol is drawn so as to create contrast between the airplane and other course lines.

An active waypoint bearing needle pivots about a point just aft of the fuselage nose. Next to the head of the arrow are the bearing numbers and next to the tail are the reciprocal bearing numbers. The bearing numbers are shown to the right of the arrowhead if the arrow points to the right and vice versa. The reciprocal bearing numbers are shown on the side opposite the bearing numbers. A button, on the HSD control panel marked waypoint bearing (WP BRG), if pushed selects and deselects the waypoint bearing needle display. The purpose of the bearing needle is to help the pilot, if he becomes confused, to determine his position. The waypoint needle always points to the active waypoint.

A Course Direction Arrow (CDA) line is provided to assist the pilot in getting on his selected course in an expeditious manner if he should become disoriented or positioned off the course line. The CDA originates and is perpendicular to the ten course deviation dots. The CDA is in the direction of the selected course and has an arrowhead on the end. The CDA is coincident with the selected course line when the deviation is less than 5 dots and limits at 5 dots for deviations greater than 5.

The symbol for a waypoint is a four-corner star similar to the one used in Jeppesen publications. The symbol for a VORTAC station is a triangle with the corners cut off, with one base side at the top and horizontal.

Waypoint numbers or ID letters are shown below and to the right of the waypoint symbols. ID letters for the NAVAIDS are to the right of the NAVAID symbol. These letters and numbers need to be close to the related symbol. but enough away so that both are legible when a waypoint and NAVAID are co-located.

On the left side display bezel, printed below HDG SEL, is ACT WP (active waypoint). Sequenctially below ACT WP, CRS (active course) DTWP (distance to waypoint), TTWP (time to waypoint) and NAV (navigation receiver) are printed.

Next to ACT WP is a number presenting the active waypoint. If the navigation system is in the dead reckoning mode (due to a loss of radio signals and INS off), the letters DR (dead reckoning) appear next to the waypoint number and blink once every second. If the navigation system is in VOR, ILS or TACAN modes, these letters will appear next to the waypoint number. No letters next to the waypoint number indicates the system is in the RNAV mode. When the navigation system is in the DR mode, the number of elapsed minutes the system has been in the DR mode will be displayed directly below the waypoint number.

Next to CRS is a three-digit number that indicates the selected course. Directly below the course number is a number which designates whether course 1 or 2 is active. Course 1 may also be followed by an A, indicating auto sequence mode.

Next to DTWP is noted the nautical miles from the aircraft to the active waypoint. This distance appears to the nearest tenth of a nautical mile.

Next to TTWP is noted the minutes the aircraft will take to reach the active waypoint at the present computed ground speed. This time is displayed to the nearest tenth of a minute.

Next to NAV on the display appear the letters of the navigation receivers being used for the active WP.Failure annunciations provided in the location will be determined by later simulation studies. Annunciations such as the following may be implemented; I/T (INS aided TACAN), I/V (INS aided VOR), I (INS), T (TACAN) or V (VOR).

The current map scale is presented in the lower left corner of the display. SCALE is written on the bezel.

The wind information is displayed in the lower right corner of the display. WIND is written on the bezel at the bottom edge of the display. The velocity in knots is displayed above the WIND legend. A wind direction arrow is drawn to the left of the digital velocity readout and points in the magnetic direction of the wind relative to the displayed map.

WP AVAIL (waypoint available) is written on the bezel in the upper right corner of the display. Next to this legend appears the number of the next available waypoint when the associated navigation aid signal is such that the waypoint can be used for navigation. If the auto waypoint sequence mode has been selected, the letter A will be attached to the next available waypoint number.

4.2.2. HSD CONTROLS

Figure 4-7 shows the HSD and PFD controls. The switches under Horizontal Situation perform the following functions:

HDG/NOR - HDG/NOR changes the map from heading-up to a North-up orientation and vice versa. Lighted annunciation.

MAP/CRSR - MAP/CRSR changes the slew control to effect the cursor or the map. In the cursor selected state a cursor appears superimposed on the active waypoint. Lighted annunciation.

MAP RTN - MAP RTN returns the map to its normal position (not slewed/map mode).

MAP REVU - MAP REVU causes the map to appear when no radio signals are available. The active waypoint is located at the airplane location. The purpose of MAP REVU is to allow preflight review of the planned flight using the map slew feature. The aircraft symbol is not displayed during MAP REVU. Lighted annunciation.

2 **NM/IN** - Map scale select: Lighted annunciation, HSD annunciation.

8 **NM/IN** - Map scale select: Lighted annunciation. HSD annunciation.

40 **NM/IN** - Map scale select: Lighted annunciation, HSD annunciation.

SLEW CONTROL - The slew control is used to position a cursor on the HSD map or to move the map itself. If the cursor is selected, the purpose is to designate a location on the map for a waypoint. If map is selected, the purpose is to view portions of the map which are otherwise out of view because of HSD scaling and size limitations. The normal mode will be the map slew mode.

The slew control is implemented using a nine-position switch. Selection of the Map or Cursor Slew modes is made by depressing the appropriate MAP/CRSR push button switch. Pressing the cursor control lever all the way in any of the four directions as shown will cause a fast slew of the map or cursor in a corresponding direction. Pressing the lever half way results in a low speed slew in that direction.

The switch is spring loaded to the center off position. When it is released in the cursor slew mode, the cursor will remain fixed to the map and will translate along with the other map symbology.

Upon switch release in the map mode, the map will remain at a fixed displacement from the aircraft's present position in accordance with the past use of the slew control. The map may be returned to its original airplane oriented position by activating the "MAP RETURN" switch.

The fast slew rate for either mode has been selected at 1-inch per second and the slow slew rate is 0.2-inch per second.

Figure 4-7: PRIMARY FLIGHT AND HORIZONTAL SITUATION DISPLAY CONTROLS

ORIGINAL PAGE IS
OF POOR QUALITY

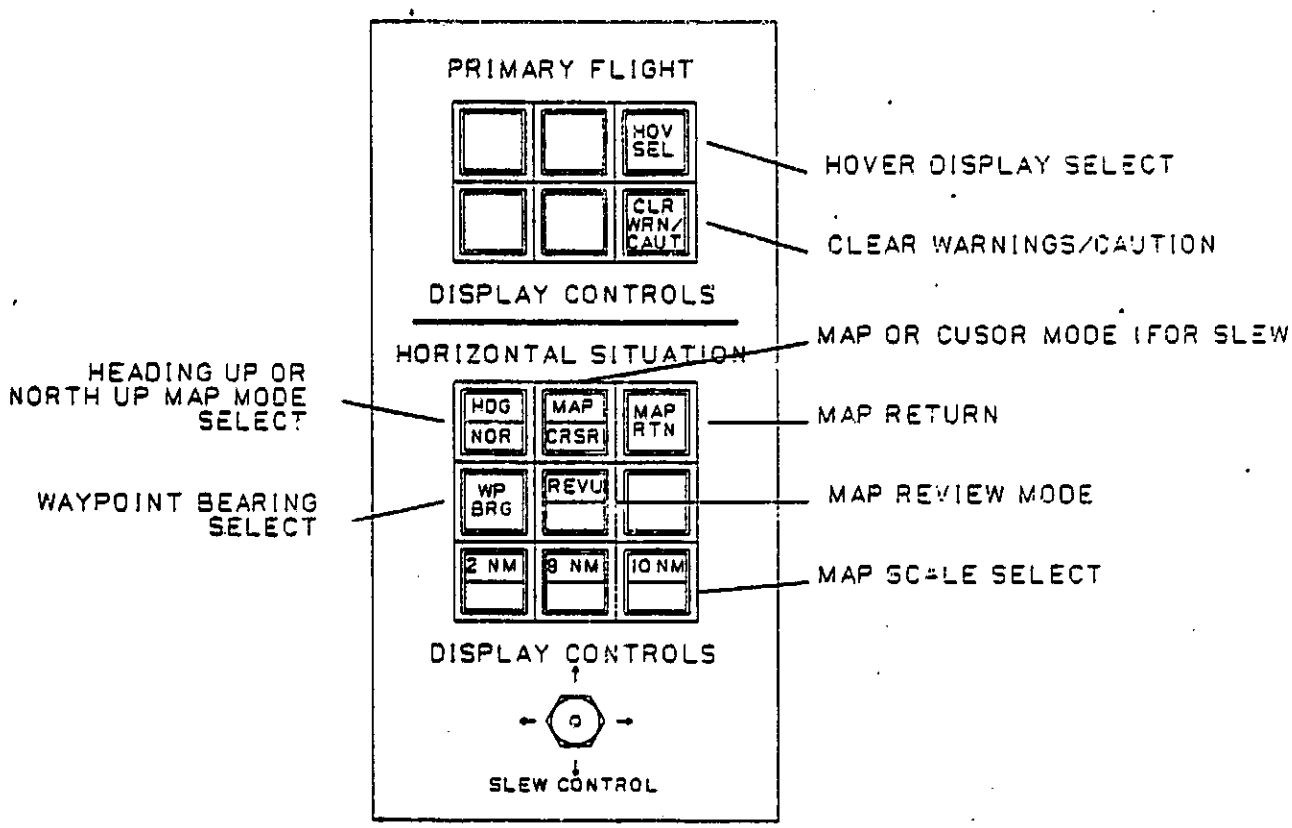

WP BEARING - Pushing the control button causes the WP BRG indicator to appear and if pushed a second time it will be removed from the display. The control button is illuminated when the pointer is active. The bearing in degrees to the WP is displayed next to the head of the pointer and the reciprocal displayed next to the tail.

4.3. PRIMARY FLIGHT DISPLAY DESCRIPTION

The discriptions and figures presented in the following paragraphs illustrate the initial starting point in the development of the primary flight display. Final symbology and display presentations will be determined through further simulation studies.

4.3.1. PRIMARY FLIGHT DISPLAY

The PFD format for departure, cruise and transition is shown in Figure 4-8. The following paragraphs provide a general description of the displayed symbology.

The red WARNING or an amber CAUTION indication is presented at the center top of the display. This area of the display is normally blank until a message is sent to the pilot. The display can be cleared by the pilot by pushing the button to the left of the display labeled CLR WRN/CAUT on the PFD display control panel.

Radar altitude is displayed to the right of the bank angle indicator and will be blanked until the vehicle is at 2500 feet or below.

The MDA/DH is displayed in the lower right corner. The appropriate display, MDA or DH, will depend on the programmed approach. MLS and ILS will display DH and other non-precision approaches will display an MDA. As the DH or MDA is passed through on descent the display will blink momentarily.

In the upper center below the caution/warning, the marker being passed is annunciated. The outer marker will be annunciated by OM, the middle marker by MM and the inner marker by IM. These will blink during passage at the standard frequency. Also "DLNK" and "ALT AL" are presented here for data link message and altitude alerting, respectively.

The heading scale is located on the horizon line with markers at even numbers every 10 degrees. Between the 10 degree markers are short vertical marks to denote the 5 degree increments. Exact aircraft heading is shown with the inverted V.

Attitude lines parallel to the horizon have 10 degree attitude division marks with the attitude called out by number. A short horizontal line marks the 5 degree attitude position.

ORIGINAL PAGE IS
OF POOR QUALITY

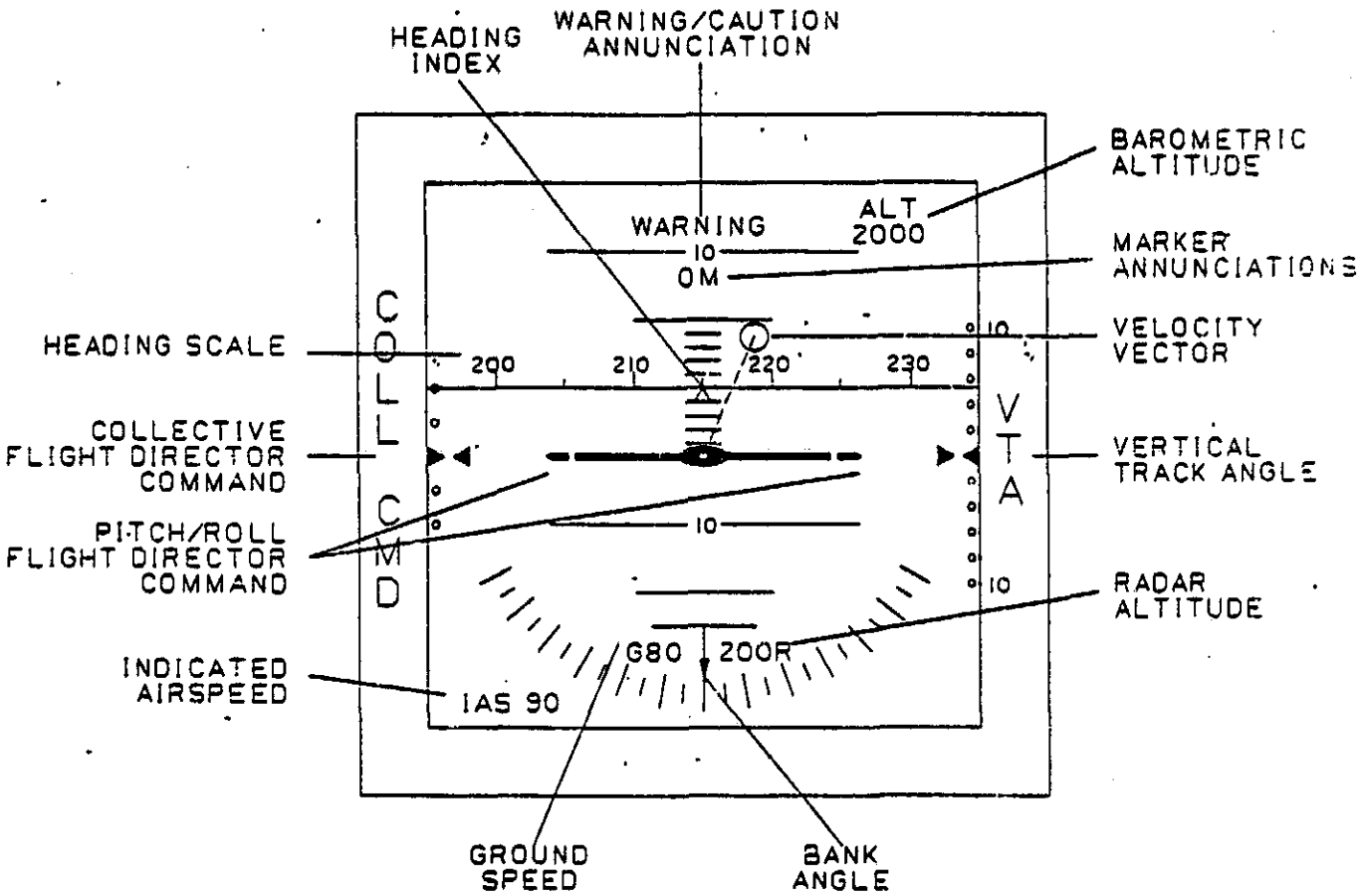

Figure 4-8: RODAAS PRIMARY FLIGHT DISPLAY (PFD)

A simulated aircraft reference is fixed on the center of the display. The center circle is see through and when the velocity vector is lined up exactly with aircraft reference the cross of the velocity vector will show and the circle of the vector will show around the center of the reference.
The velocity vector symbol is a circle 3/16 inch in diameter with a dashed line connecting the center of the symbol with the center of the fixed aircraft reference. The position of the velocity symbol shows the direction the vehicle is moving with respect to the horizon. If the vehicle is moving backward, the symbol will blink.

The flight director command reference indicators are two extensions of the wings on the simulated aircraft reference. Matching the simulated aircraft references with the wing like extensions will command the aircraft to the Flight Director instructed flight path. There is a light line connecting the two flight director indicators.

The left middle side of the PFD has a collective command indication. Matching the moving indicator to the fixed indicator by positioning the collective will satisfy the flight director commands.

Indicated airspeed is displayed in the lower left corner of the display.

Barometric altitude is presented in the upper right corner of the display.

The bank angle indicator looks like a T with ground speed shown under the left side and radar altitude under the right side when below 2500 feet. The stem of the T points at the bank angle indications, with marks at 20,40 and 60 degrees of bank. Between the 20 degree bank increments are short line indications for 10 degree bank increments.

See Figure 4-9 for examples of PFD departure and cruise transition displays.

The Vertical track Angle is displayed along the right side of the PFD. The marks are currently defined at 2 degree increments. The scale can be changed to meet operational needs later in the program. The moveable indicator shows the actual track angle or the pre-selected track angle.

The Hover display format is shown in Figure 4-10. When Hover is selected on the PFD display controls, changes are made in the display as noted in the following paragraphs.

Percent torque is shown on the left side just below the middle of the display. A small tact on the line just above the torque number gives the pilot an analog indicator of where he is with respect to 100% torque. Torque from 50 % to 100 % through a 90 degree angle is displayed by the analog indicator.

ORIGINAL PAGE IS
OF POOR QUALITY

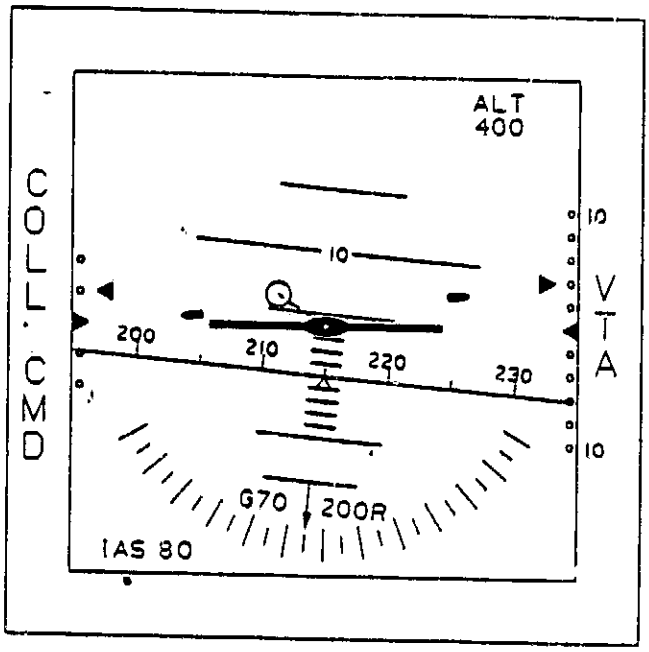

CLIMBING LEFT TURN

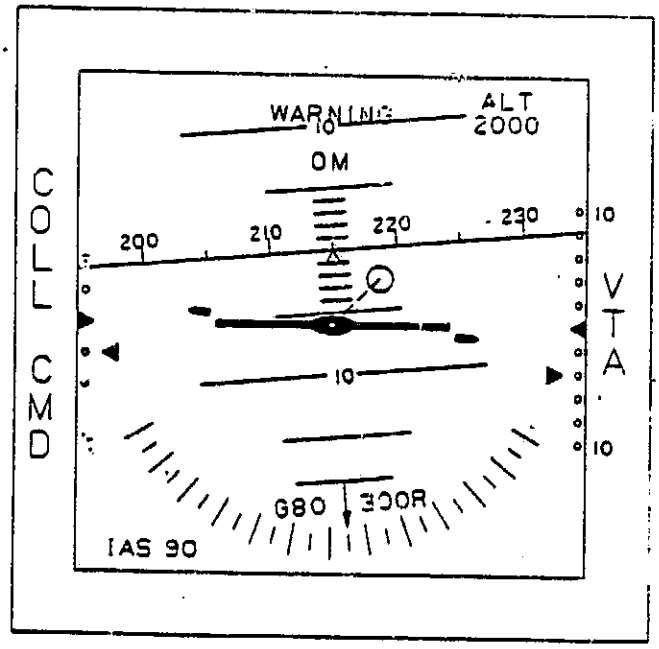

DESCENDING RIGHT TURN

Figure 4-9: PFD DEPARTURE-CRUISE TRANSITION DISPLAYS

ORIGINAL PAGE IS
OF POOR QUALITY

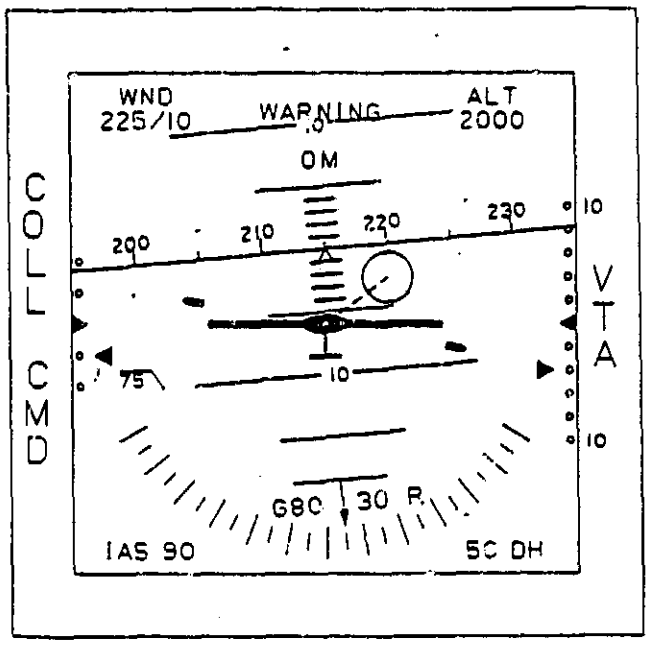

DESCENDING RIGHT TURN - HOVER

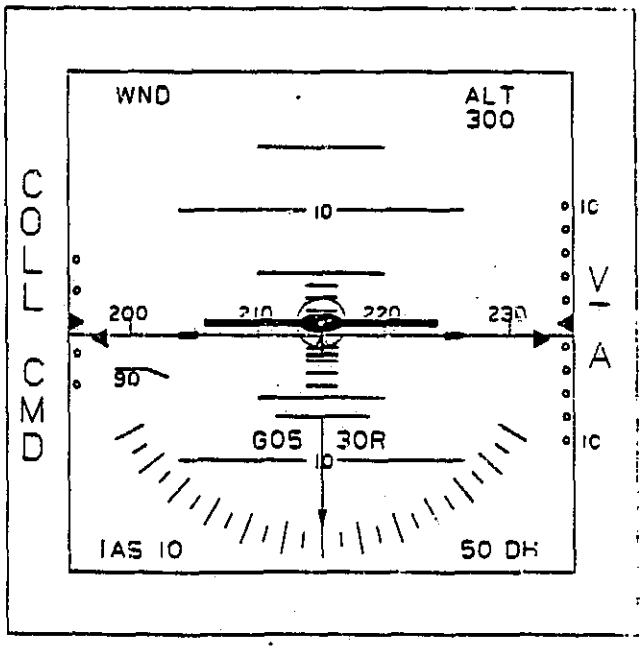

TRANSITION TO HOVER - 30 FT

Figure 4-10: PFD HOVER TRANSITION DISPLAYS

The computed wind is displayed in the upper right corner of the display. The wind notation is numerical with velocity in knots over the direction in degrees from which the wind is blowing. For less than 5 knots, no wind information is displayed.

Upon selection of the Hover Mode, the velocity vector indicator circle expands in diameter from 3/16 inch to 3/8 inch.

The top of the bank angle indicator acts as a rising runway presentation starting at 100 feet of altitude. The stem of the indicator will extend with the point of the bank angle remaining always at the same position relative to the bank angle marks. The ground speed and the radar altitude information moves up with the rising runway indication. If ground speed is zero, only the G will be displayed.

The landing gear symbol appears below the fixed aircraft reference symbol as an upside down T. The rising runway just described will meet the upside down landing gear T at ground contact.

See Figure 4-10 for examples of the PFD Hover transition presentations.

5. RODAAS FUNCTION DESCRIPTION

RODAAS functions include:

Autopilot/Flight Director Modes

- Go-Around
- Pitch/Roll/Collective Trim
- Altitude
  - Altitude Select
  - Altitude Hold
- Vertical Navigation (VNAV)
- Flight Path Angle
  - FPA Select
  - FPA Hold
- Heading Hold
- Heading Select
- Navigation (NAV)
- Approach (APPR)
  - Glideslope
  - Lateral Beam Following
- Hover Hold
- Airspeed
  - IAS Select
  - IAS Hold
- Stability/Control Augmentation System

Navigation/Flight Planning

- VOR, DME, TACAN, RNAV/INS Transponder
- Global Position System (Future expansion capability)
- 25 Waypoints, 15 Navaid Storage

Flight Warning/Advisory System

- Engine Parameter Monitoring/Recording (Instrument Statistics, Chip Detectors, etc.)
- Transmission Monitoring (Oil Pressure, Oil/Bearing Temps, Chip Detector)
- Rotor Speed Monitoring
- Aircraft Configuration
- Marker Beacon Advisory
- Airspeed Monitoring
- Autopilot/Flight Director Monitoring
- Bit Fault/Warning Recording

Horizontal Situation Display Presentations

- North Up Map
- Heading Up Map
- Hover
- Weather Radar
- Tactical (Future)

Primary Flight Display Presentations

- Forward Speed Modes
- Hover

GMT Clock Function

Fuel Totalizer Function

Weight and Balance Computations

Performance Computations

- Takeoff Performance
- Climb Performance
- Cruise Performance
- Arrival Performance

Data Link (Future expansion capability)

BIT (Built in Test)

Normal, Emergency Checklists

The following paragraphs provide more detailed description of these RODAAS functions.

5.1. RODAAS AUTOPILOT/FLIGHT DIRECTOR FUNCTION

The Autopilot/Flight Director Function computes commands to the yaw (tail rotor), pitch, roll and collective servos to provide stability augmentation and autopilot functions. It also provides signals to the PFD. The status of the system is reported by messages on the mode annunciator panel. The autopilot/flight director modes are:

Go-Around
Pitch/Roll/Collective Trim
Altitude
- Altitude Select
- Altitude Hold
Vertical Navigation (VNAV)
Flight Path Angle
- FPA Select
- FPA Hold
Heading Hold
Heading Select
Navigation (NAV)
Approach (APPR)
- Glideslope
- Lateral Beam Following
Hover Hold
Airspeed
- IAS Select
- IAS Hold
Stability/Control Aug System

The modes which follow the radio signals of VOR, RNAV/INS, TACAN, localizer, and glideslope have submodes for arm, capture, and track of the beam. Automatic transition from heading hold and heading select with navigation or approach modes armed is provided when the navigation or localizer beam is captured. Automatic transitions from vertical navigation, go-around, and altitude select to altitude hold are also mechanized. IAS select provides selection to IAS hold. The autopilot and flight director revert to heading hold or roll attitude hold, pitch attitude hold and altitude rate hold, if no modes are selected.

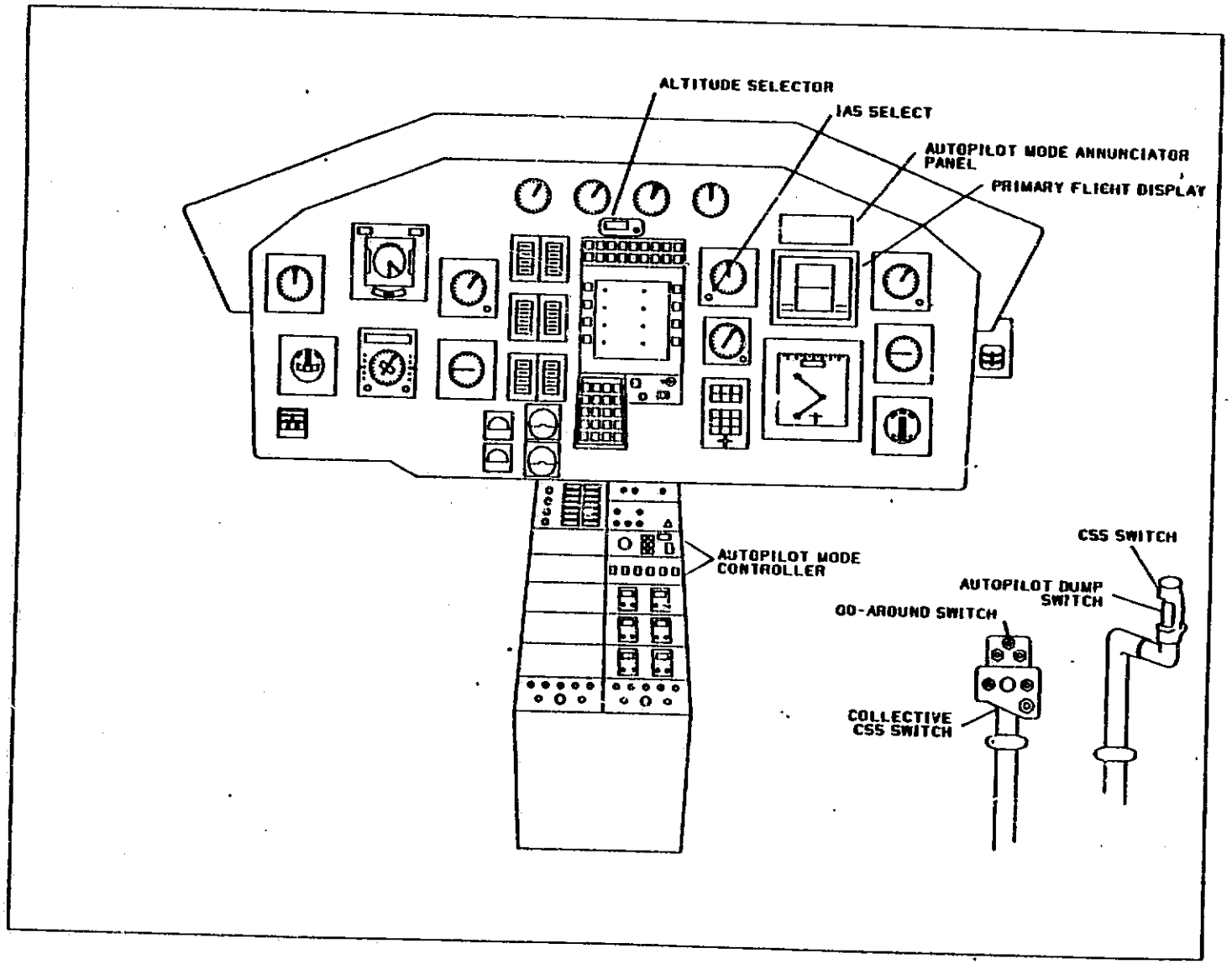

Figure 5-1: AUTOPILOT/FLIGHT DIRECTOR CONTROLS AND DISPLAYS

The mode switching logic interprets inputs from the pilot and status signals from the system components to select the proper pitch, roll, collective and yaw calculations. Autopilot and flight director signals are provided whenever the autopilot or flight director are engaged. The mode logic directs synchronizers on pitch, roll, and collective commands to eliminate bumps upon engagement of the autopilot servos.

5.1.1. AUTOPILOT/FLIGHT DIRECTOR CONTROLS AND DISPLAYS

Autopilot/Flight Director controls and displays are indicated on Figure 5-1. The Autopilot/Flight Director modes are managed via the modified KMC 340 Mode Controller with auxillary mode switch panel and miscellaneous special switches. Modes are annunciated on the electroluminiscent annunciator panel. Flight commands are displayed on the Primary Flight Display (PFD).

5.1.1.1. AUTOPILOT MODE CONTROLLER

The following mode control functions are performed using a modified KMC 340 Mode Controller and the auxillary mode switch panel (Figure 5-2):

Flight Director	VNAV engage
SCAS engage	FPA select engage
Autopilot engage	FPA engage
Approach mode engage	IAS select engage
Nav engage	IAS engage
Altitude hold engage	Heading select engage
Altitude arm engage	Hover engage

The switches at the right are the primary engage switches which are used to engage or disengage the flight director, autopilot, and SCAS. The flight director switch is a momentary contact type which is used to toggle the engage state between on and off. The autopilot and SCAS switches are solenoid held toggle switches.

With the autopilot engaged and no other modes selected, the autopilot will utilize the basic SCAS signals to command altitude rate hold, pitch attitude hold, heading hold if roll attitude is 5 degrees or less; roll attitude hold mode otherwise, during cruise flight. In the hover condition, the control laws command the yaw servos to hold heading when the pedal force is below 8 pounds and proportional heading rate when pedal force exceeds 8 pounds. In the cruise condition, the yaw servos receive turn coordination commands.

Hover and cruise conditions are defined as follows:

$$VHT = \begin{cases} \text{True Airspeed for barometric altitude} \geq 40 \text{ feet} \\ \text{Ground Speed for barometric altitude} \leq 20 \text{ feet} \\ \\ \text{Linear blend of True and Ground airspeed for} \\ 20 < \text{Baro Altitude} < 40 \text{ feet.} \end{cases}$$

Cruise condition = VHT $\geq$ 25 Knots
Hover condition = VHT $<$ 25 Knots

The heading is selected by means of the knob located on the left of the mode controller. Rotating the knob to either the left or right precesses the heading bug on the HSD at the rate proportional to knob deflection. The selected heading is presented to the pilot on the HSD.

The switches on the center of the modified KMC 340 mode panel are push button mode select switches. Pushing the buttons will toggle the state of the mode between the engaged and disengaged state.

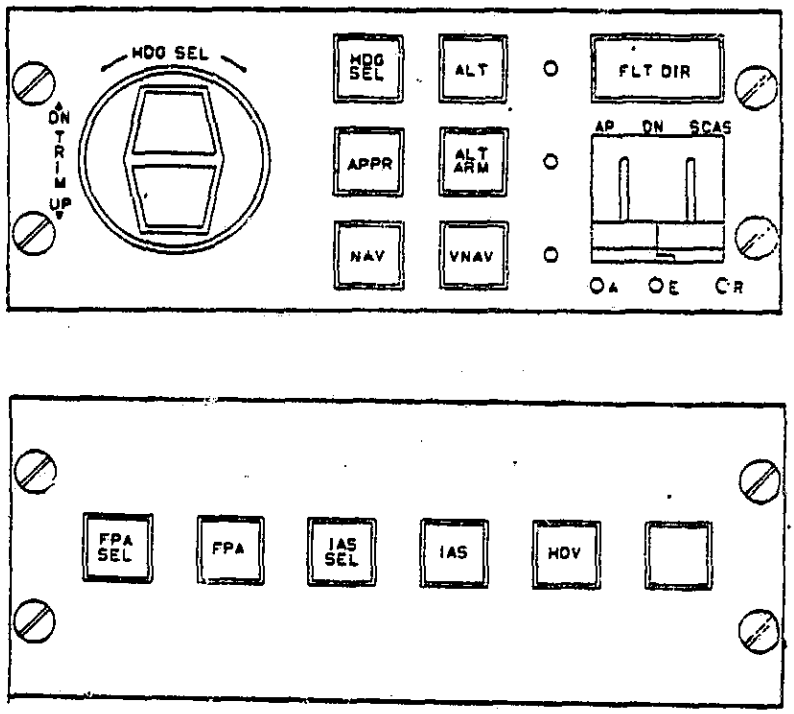

Figure 5-2: AUTOPILOT/FLIGHT DIRECTOR MODE CONTROLLER PANEL

The auxillary mode switch panel provides six additional push button mode select switches. Depressing these buttons will toggle the state of the mode between the engaged and disengaged state.

5.1.1.2. <u>SPECIAL SWITCHES</u>

Four switches alter the state of the system. These momentary contact switches are called -

autopilot/SCAS dump switch (on cyclic grip)
cyclic CSS switch (on cyclic grip)
go-around switch (on the collective)
collective CSS-switch (on the collective)

ORIGINAL PAGE IS
OF POOR QUALITY

A diagram of the autopilot dump switch is shown in Figure 5-3. Depressing the button energizes a relay to open the power source to the Autopilot and to the Stability and Control Augmentation System.

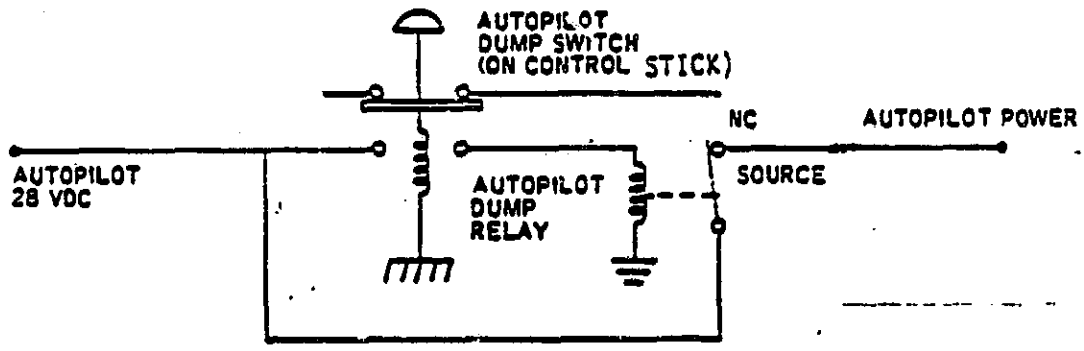

Figure 5-3: AUTOPILOT DUMP SWITCH

The cyclic CSS switch, when depressed, disengages the autopilot outer loops, and allows the operator to manually introduce commands to the aircraft through the SCAS system. Upon returning from the detent position, synchronizing registers which have followed the aircraft state allow the autopilot to hold the new conditions.

The go-around switch puts the autopilot flight director computation in the go-around mode which calls for wings level, 500 fpm collective and a preassigned 50 knot airspeed hold.

The collective CSS switch disengages the parallel servo clutch, allowing the collective stick to be moved freely. Upon release of the CSS switch, altitude rate concurrent with existing conditions will be synchronized.

5.1.1.3. ELECTROLUMINESCENT MESSAGE DISPLAY MODE ANNUNICATOR PANEL

The status of the system is reported by the computer on the mode annunciator panel. This panel is located directly above the PFD as shown in Figure 5-4. A preliminary definition of items displayed on the annunciator panel is presented here. Final mode presentations will be determined through further simulation studies.

Flight Director
(FLT DIR)
Autopilot on
(AUTOPILOT)
SCAS on (SCAS)
Navigation Mode Armed
(NAV ARM)
Altitude Arm Mode on
(ALT ARM)
Altitude Hold Mode on
(ALT HLD)
Vertical Navigation Mode on
(VNAV CPLD)

Navigation Mode Coupled
(NAV CPLD)
Approach Mode Armed
(APPR ARM)
Approach Mode Coupled
(APPR CPLD)
IAS Hold on
(IAS HLD)
IAS Select on
(IAS SEL)

Glideslope Coupled
(GS CPLD)
FPA Select (FPA SEL)
FPA Hold (FPA HLD)
Go-Around Mode Engaged
(GO-AROUND)
Reverse Localizer on
(REV LOC)
Hover Hold on (HOV)
Heading Select Mode on
(HDG SEL)

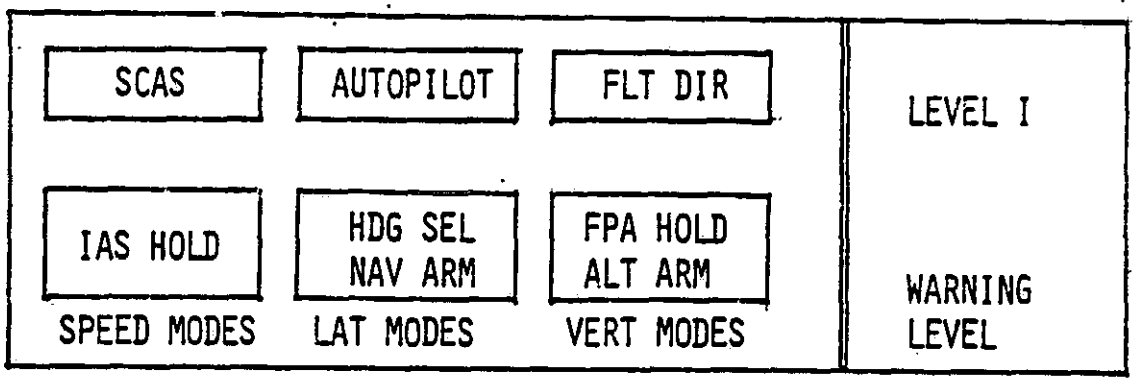

Figure 5-4: ELECTROLUMINESCENT MODE ANNUNCIATOR PANEL

A deteriorated function warning is provided in the system state warning area. The warnings presented here are discussed in detail in the flight warning and advisory function section.

The mode annunciator panel is a 1.8 in x 7.2 in EL graphic display. Future expansion, using this display for parameter warnings, etc, is foreseen.

5.1.1.4. PRIMARY FLIGHT DISPLAY

The PFD displays the following information:

Pitch and Roll Attitude
Pitch,Roll & Collective Commands
LOC Deviation
Glideslope Deviation
VNAV Track Angle

Decision Height (DH)
Warnings/Cautions/Alerts
Marker Beacon Annunciation
Flight Path
Minimum Descent Altitude (MDA)

ORIGINAL PAGE IS
OF POOR QUALITY

The Primary Flight Display is shown in Figure 5-6.

5.1.1.5. ALTITUDE AND FLIGHT PATH ANGLE SELECTOR

- The selector provides the pilot with altitude preselection, flight path angle selection and vertical track angle selection capabilities. The selector control head is shown in Figure 5-5.

The set knob in the right lower corner of the selector is a dual operation device. The lower portion of the knob selects the parameter to be selected. Six positions are available, only two are currently defined (ALT SEL and FPA). The inner set control is used to set the digits in the display. A clockwise rotation selects increasing data values, while counter-clockwise selects decreasing data values. The mechanism has no mechanical stops. The following range limits have been designated for the defined selections.

SELECTION	RANGE
ALT SEL	0 to 20,000 feet
FPA	-10 to +10 degrees

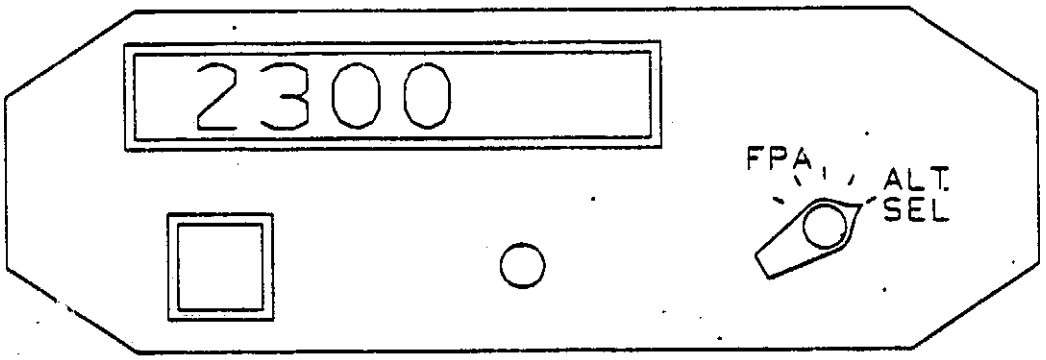

Figure 5-5: ALTITUDE AND FLIGHT PATH ANGLE SELECTOR

In the ALT SEL position, the controller provides normal altitude select and altitude alert functions.

When the pilot selects FPA on this selector, the display initially syncs to the flight path angle existing at the time of selection. The pilot may then select a new FPA with the set knob.

5.1.2. AUTOPILOT/FLIGHT DIRECTOR ALGORITHMS

Autopilot/Flight director algorithms described below include:

Mode Logic
Control Laws
Monitoring Functions

5.1.2.1. AUTOPILOT/FLIGHT DIRECTOR MODE LOGIC

The autopilot/flight director mode logic may be described as a hierarchy of finite-state machines as diagrammed in Figure 5-7. This decomposition permits an organization of the details and a precise representation of the relations. The lateral, vertical and speed mode logic machines control the autopilot/flight director calculations. Several of the modes (states) of these machines have submachines for arm, capture, and track submodes. A diagram of the machines is shown in Figure 5-8.

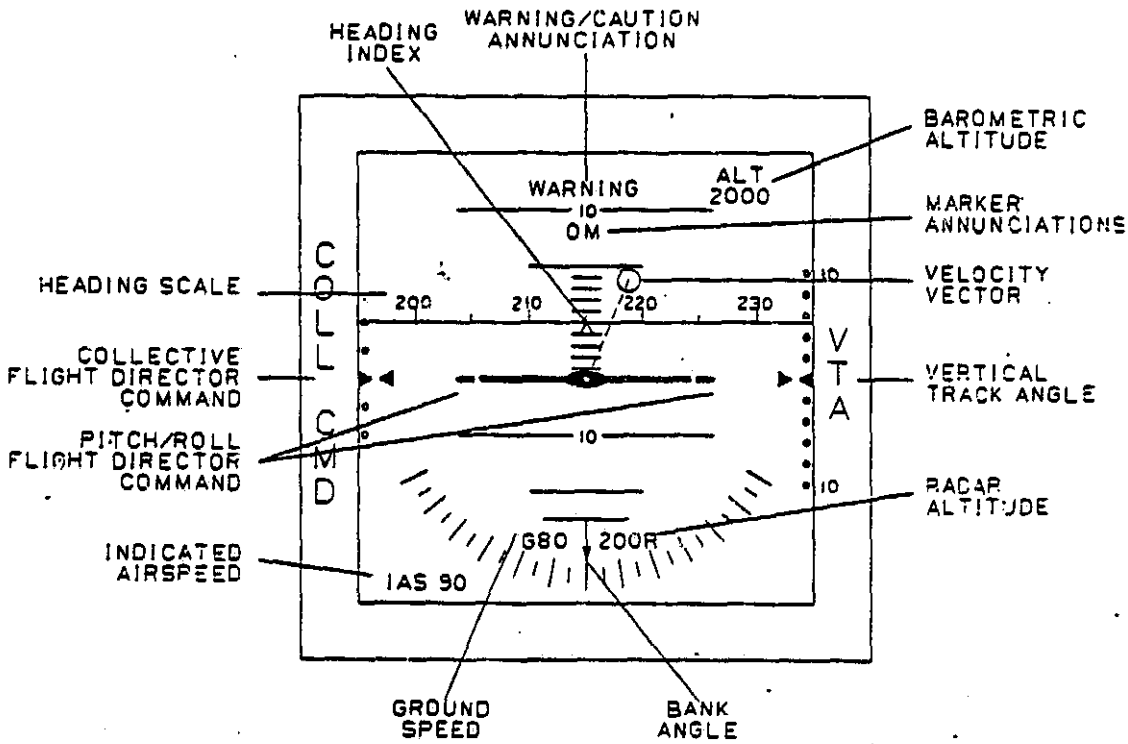

Figure 5-6: RODAAS PRIMARY FLIGHT DISPLAY

5.1.2.2. THE SYSTEM STATE MACHINE

This machine performs the tasks of the system switch configuration, representing the states of the flight director, the SCAS and the autopilot. The state table is presented in Table 5-1 and 5-2. The entries in the body of the table show the new state to which the system transitions when a given event occurs. All states and events are independent. Dashes indicate "don't care" conditions.

The state transitions are controlled by the:

Flight Director Button	Autopilot Engage Signal
SCAS Engage Signal	Cyclic CSS Switch
Go-Around Switch	Collective CSS Switch

The definition of the system-state machine takes into account the mechanization in hardware. The pertinent points are:

> The SCAS switch and the autopilot switch are mechanically linked so that turning on the autopilot switch carries the SCAS switch; turning off the SCAS switch carries the autopilot switch.
>
> The events below must act through the solenoid enables of the autopilot and SCAS switches:

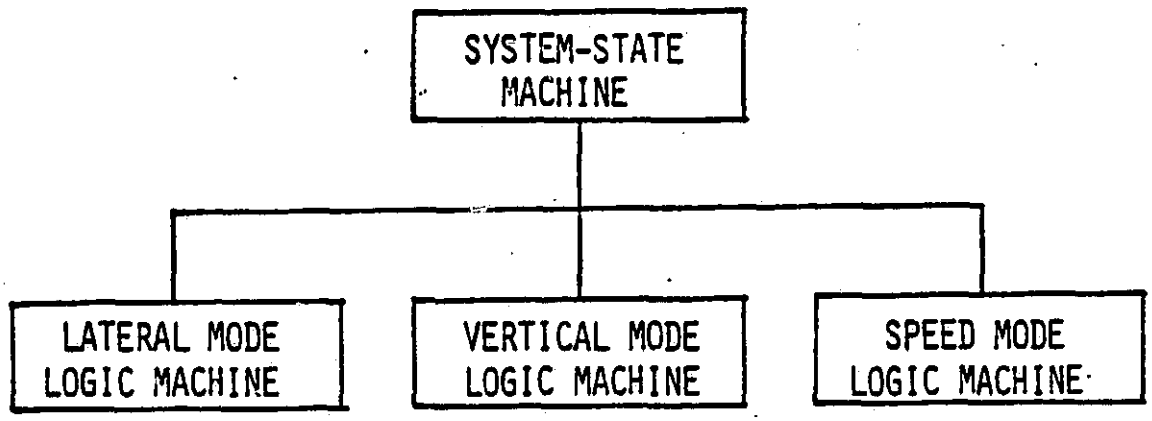

Figure 5-7: ABSTRACT MACHINE HIERARCHY

Figure 5-8: THE SOFTWARE MACHINES

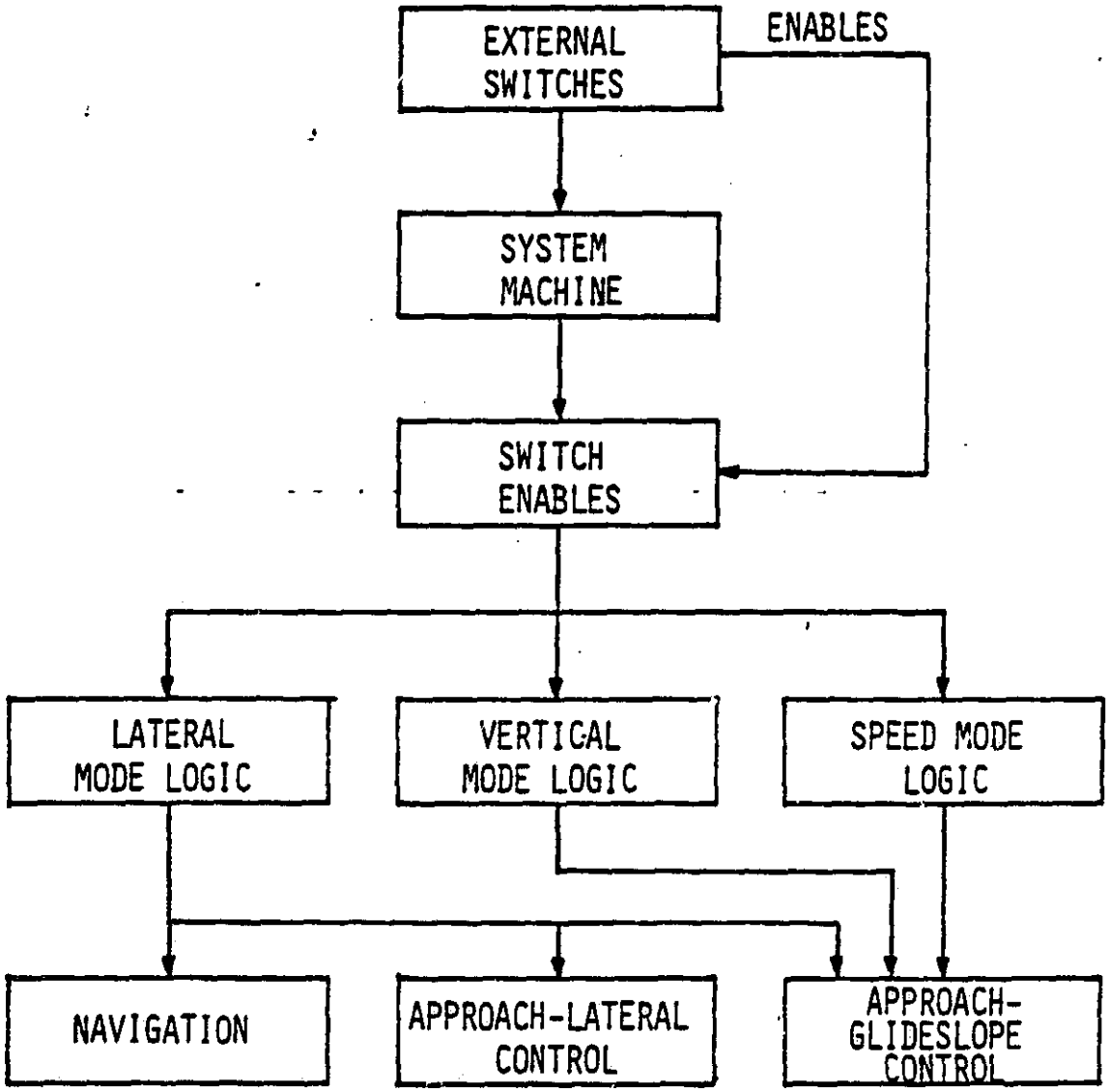

	SCAS	AUTOPILOT
Go-Around Switch ON	-	-
Autopilot Dump Switch ON	disable	disable
Not INS Valid	disable	disable
Not Bit Report OK	disable	disable

If the conditions for a service are not met where the service is requested, the request is ignored.

The conditions listed may be abbreviated by the following flags:

SCAS flag = not autopilot dump sw on and LINS valid and BIT reports ok.
AP flag = SCAS flag.

These flags must be true for the SCAS and autopilot to be enabled respectively.

For the flight director to be enabled, the flight director flag must be true.

Flt Dir Flag = INS valid and BIT reports ok.

The system state machine (Table 5-1,5-2) is started with the flight director, SCAS and autopilot in state 0 and the SCAS and autopilot flags true. The flight director switch and the other mode switches have momentary contact action. The software must look for an off period before it can interpret the signal as a new command. This sort of thing has not been modeled in the finite-state machine representations.

5.1.2.3. THE LATERAL MODES

Autopilot/Flight Director lateral modes are:

Roll Attitude Hold	Navigation (NAV)
Heading Hold	Approach (APPR)
Heading Select	Control Stick Steering (CSS)
Hover	Go-Around

In addition to these separate modes, the system may be in heading hold or heading select with either navigation or approach armed. The mode then automatically switches from heading hold or heading select to navigation or approach when the respective beam is captured.

BANK ANGLE HOLD - These are the basic signals which are components of all lateral modes. They are computed when the bank angle is equal to or greater than five degrees.

Table 5-1: SYSTEM STATE MACHINE

ORIGINAL PAGE IS
OF POOR QUALITY

STARTING: STATE 0

+ FLASH AUTOPILOT MESSAGE FOUR TIMES AND SOUND WARNING HORN

\# CONTROL STICK STEERING ALTERS FLIGHT DIRECTOR OUTPUT

() TRANSITION IS MECHANICALLY ENFORCED

STATE \ EVENT	FLT DIRECTOR FLAG FALSE	FLT DIR BUTTON ON AND FLT DIR FLAG TRUE	GO-AROUND BUTTON ON & FLT DIR FLAG TRUE	A MODE BUTTON ON & FLT DIR FLAG TRUE(NOT FD)	AP ENGAGE TRUE AND AP FLAG TRUE	AP ENGAGED FALSE OR AP FLAG FALSE	CYCLIC CSS BUTTON DEPRESSED	SCAS ENGAGED TRUE & SCAS FLAG TRUE	SCAS ENGAGED FALSE OR SCAS FLAG FALSE	CYCLIC CSS BUTTON RELEASED	COLLECTIVE CSS BUTTON DEPRESSED	COLLECTIVE CSS BUTTON RELEASED
0. FLIGHT DIRECTOR OFF SCAS OFF AUTOPILOT OFF	0	1	1	1	0	-	-	3	-	-	-	-
1. FLIGHT DIRECTOR ON SCAS OFF AUTOPILOT OFF	0	0	1	-	1	-	-	2	-	-	-	-
2. FLIGHT DIRECTOR ON SCAS ON AUTOPILOT OFF	0	3	2	-	5	-	6	-	1	-	9	-
3. FLIGHT DIRECTOR OFF SCAS ON AUTOPILOT OFF	0	2	2	2	4	-	6	-	0	-	9	-
4. FLIGHT DIRECTOR OFF SCAS ON AUTOPILOT ON	0+	5	5	5	-	3+	7	-	(0)+	-	10	-
5. FLIGHT DIRECTOR ON SCAS ON AUTOPILOT ON	0+	4	5	-	-	2+	8	-	(1)+	-	11	-
6. FLIGHT DIRECTOR ON SCAS ON AUTOPILOT OFF CYCLIC CONTROL STICK STEERING ON	0	6	6	-	8	-	-	-	1	2#	12	-
7. FLIGHT DIRECTOR OFF SCAS ON AUTOPILOT ON CYCLIC CONTROL STICK STEERING ON	0+	8	8	8	-	6+	-	-	(0)+	4#	13	-
8. FLIGHT DIRECTOR ON SCAS ON AUTOPILOT ON CYCLIC CONTROL STICK STEERING ON	0	7	8	-	-	6+	-	-	(1)+	5	14	-
9. FLIGHT DIRECTOR ON SCAS ON AUTOPILOT OFF COLLECTIVE CONTROL STICK STEERING ON	0	9	9	-	11	-	12	-	1	-	-	7#
10. FLIGHT DIRECTOR OFF SCAS ON AUTOPILOT ON COLLECTIVE CONTROL STICK STEERING ON	0+	11	11	11	-	9+	13	-	(0)+	-	-	4#
11. FLIGHT DIRECTOR ON SCAS ON AUTOPILOT OFF COLLECTIVE CONTROL STICK STEERING ON	0	10	11	-	-	9	14	-	(1)	-	-	5#

Table 5-2: SYSTEM STATE MACHINE (Cont)

STARTING: STATE 0

+ FLASH AUTOPILOT MESSAGE FOUR TIMES AND SOUND WARNING HORN

CONTROL STICK STEERING ALTERS FLIGHT DIRECTOR OUTPUT

() TRANSITION IS MECHANICALLY ENFORCED

STATE \ EVENT	FLT DIRECTOR FLAG FALSE	FLT DIR BUTTON ON AND FLT DIR FLAG TRUE	GO-AROUND BUTTON ON & FLT DIR FLAG TRUE	A MODE BUTTON ON & FLT DIR FLAG TRUE (NOT #10)	AP ENGAGE TRUE AND AP FLAG TRUE	AP ENGAGED FALSE OR AP FLAG FALSE	CYCLIC CSS BUTTON DEPRESSED	SCAS ENGAGED TRUE & SCAS FLAG TRUE	SCAS ENGAGED FALSE OR SCAS FLAG FALSE	CYCLIC CSS BUTTON RELEASED	COLLECTIVE CSS BUTTON DEPRESSED	COLLECTIVE CSS BUTTON RELEASED
12. FLIGHT DIRECTOR ON SCAS ON AUTOPILOT OFF CYCLIC & COLLECTIVE CONTROL STICK STEERING ON	0	12	12	0	14	-	-	-	1	9#	-	6#
13. FLIGHT DIRECTOR OFF SCAS ON AUTOPILOT ON CYCLIC & COLLECTIVE CONTROL STICK STEERING ON	0+	14	14	14	-	12+	-	-	(0)+	10#	-	7#
14. FLIGHT DIRECTOR ON SCAS ON AUTOPILOT ON CYCLIC & COLLECTIVE CONTROL STICK STEERING ON	0+	13	14	-	-	12+	-	-	(1)+	11#	-	8#

HEADING HOLD - This is the lateral mode to which the system reverts when none of the other modes controlled by the buttons has been selected, the roll attitude is less than five degrees, and the aircraft is not in a hover condition.

HEADING SELECT - A desired heading can be preselected or adjusted by positioning the heading bug on the HSD (Horizontal Situation Display). This is done with the HDG SEL knob on the mode controller. The command indicator will deflect in the direction of the shortest turn to satisfy the command, or if the autopilot is engaged, the aircraft will automatically bank-turn to, rollout, and hold the preselected heading. As the selected heading is achieved, the command indicator will command a rollout to hold the heading.

With the heading select mode in operation, subsequent changes indicated in the heading "bug" position on the HSD will immediately cause the command bars on the flight command indicator to call for a turn to the new heading, unless the heading select button on the mode controller has been depressed again to cancel the heading select mode.

The heading select mode is cancelled when NAV or APPR coupling occurs.

HOVER - When the hover condition is true, this submode of the lateral axis is active. The hover mode provides bank commands to maintain a wings level attitude.

NAVIGATION - The NAV mode provides bank commands to intercept and track a VOR course, RNAV course, or TACAN course.

Operation of the navigation mode requires the pilot to proceed as follows:

1. Enter the navigation receiver frequency on the CDU or define a waypoint.

2. Enter the desired course on the CDU.

3. Depress the NAV button on the mode controller.

When the NAV button on the mode controller is depressed, NAV ARM will be presented on the annunciator panel indicating the arm state and the automatic capture logic is armed, provided a valid VOR, VORTAC or INS signal is being received. Heading hold or heading select, if operating, are retained until capture occurs.

The following equations described the switching criteria for the navigation capture, track arm and track states:

ORIGINAL PAGE IS
OF POOR QUALITY

NAVIGATION BEAM CAPTURE	= TRUE (when the course deviation [Γ] and the rate of change of the course deviation [Γ_d]. + the course deviation) are of opposite signs (sign ($\Gamma + \Gamma_d$) $\neq$ sign (Γ))
NAVIGATION BEAM TRACK ARM	= TRUE when NAVIGATION BEAM CAPTURE is true and the roll angle >5 degrees.
NAVIGATION BEAM TRACK	= TRUE when the course deviation <3 dots and roll angle <4 degrees.

If the NAV mode is selected with the wings level within ± 4 degrees of bank and within three dots of course deviation, NAV ARM will be bypassed and NAV track will engage directly.

Transition from capture to track is made through a track armed state. This is entered from capture when a bank greater than 5 degrees is made. Then the track mode is engaged when the navigation beam track flag becomes true.

The VOR, RNAV, or INS "course-capture" point is variable to prevent overshoot and depends on distance, angle of intercept, and speed of capture. Upon capture, a bank command will be introduced on the FLT DIR. The heading select, if on, will be cancelled, and NAV CPLD indicating track of beam, will be presented on the annunciator panel.

The pilot can manually bank the aircraft to satisfy the command bars which will call for a rollout to wings level when on course. Crosswind compensation is provided as necessary to track course. If the autopilot/flight director is engaged, the aircraft will bank to satisfy the command display and rollout on course automatically. If the active course is subsequently changed due to pilot action, the autopilot/flight director will revert from coupled to NAV ARM.

The NAV mode is cancelled by depressing the navigation button or selecting heading select or approach modes.

GO-AROUND - The go-around mode of the lateral axis provides bank commands to maintain a wings level attitude.

APPROACH - The approach mode provides bank and pitch commands to capture and track precision ILS (Localizer and Glideslope) beams or bank commands for non-precision VOR or RNAV courses.

Operation of the approach mode requires the pilot to -

1. Enter the navigation receiver frequency on the CDU for a VOR/ILS approach or define a waypoint for a RNAV approach.

2. Enter the course to the runway or ILS approach front course on the CDU.

3. Depress the approach button on the mode controller.

The automatic approach function will be immediately armed (provided NAV receiver and/or RNAV computer signals are valid). APPR ARM will be presented on the mode annunciator panel, to indicate the approach arm state.

In approach arm mode, the heading mode is retained until capture. This allows the pilot to adjust the heading to approach control vectoring instructions.

The LOC beam or VOR/RNAV "capture" point will vary depending on airspeed, angle of intercept, and rate of closure. Upon capture, a bank command will be introducted on the PFD, the existing heading mode will be cancelled, and APPR CPLD will be lighted on the annunciator panel.

The following equations describe the switching criteria for the approach lateral mode capture, track arm and track states:

LATERAL BEAM CAPTURE	= TRUE (when the course deviation [Γ] and the rate of change of the course deviation [$\dot{\Gamma}$] + the course deviation)are of opposite signs (sign($\Gamma + \dot{\Gamma}$)$\neq$ sign (Γ)).
LATERAL BEAM TRACK ARM	= TRUE when LATERAL BEAM CAPTURE is true and the roll angle >5 degrees.
LATERAL BEAM TRACK	= TRUE when the course deviation <3 dots and roll angle <4 degrees.

The pilot may manually bank the aircraft to satisfy the command bars which will command a rollout to wings level when the aircraft is on course. Automatic crosswind compensation will provide precise tracking. RNAV/VOR/LOC deviation is shown on the HSD and actual crab angle will be shown by offset of the course arrow from the aircraft symbol.

Throughout a precision approach, LOC deviation is displayed on both the PFD and HSD. Glideslope deviation is displayed on the PFD only.

If the autopilot is engaged during operation in the approach mode, automatic steering response will follow the command display on the PFD.

Whenever a LOC frequency is selected and the aircraft intercepts the LOC course at an angle greater than 90 degrees from the inbound front course, the REV LOC mode is automatically activated.

The LOC receiver s nals are reversed to permit the PFD steering command display to operate on a fly-to rather than a fly-from basis on the reverse course. REV LOC is automatically presented on the annunicator panel.

When capturing the localizer at an angle greater than 90 degrees to the front course, the system will command flying outbound on the front course or inbound on the back course.

Operation on REV LOC is identical to front course operation, except that automatic glideslope capture is "locked out" by the switching logic.

The switching of the lateral mode is modeled by the finite-state machine in Table 5-3. The submachines for navigation and approach-lateral control are integrated in the lateral mode logic machine.

CONTROL STICK STEERING - The Control Stick Steering (CSS) mode provides the pilot with the capability for manual maneuvering of the aircraft without the need to disengage and reengage the autopilot. The SCAS system will be retained to aid in aircraft stability.

The CSS mode is engaged by continuous pressure on the cyclic CSS button. Operation of the CSS button causes immediate release of the autopilot outer loops and allows the pilot to assume manual control, while autopilot control functions and all engaged lateral modes are placed in a synchronization state.

This means all lateral modes remain in continuous synchronization with the pilots aircraft maneuvers so that upon release of the CSS button, all previously engaged modes will smoothly reassume control of the aircraft unless decoupled or reprogrammed by the pilot.

Since all engaged modes remain coupled (in synchronization) during operation of the CSS mode, their annunciations will continue to show on the annunciator panel. The CSS mode is not separately annunciated.

5.1.2.4. THE SPEED MODES

Autopilot/Flight Director speed modes include:

Pitch Attitude Hold	IAS Select
Go-Around	IAS Hold
Control Stick Steering	

PITCH ATTITUDE HOLD - When no other pitch mode has been selected, the system reverts to this mode.

GO-AROUND - The Go-Around mode assists the pilot in establishing the proper aircraft conditions for missed-approach procedures. The go-around switch is located on the collective.

Table 5-3: LATERAL MODE LOGIC MACHINE

ORIGINAL PAGE IS OF POOR QUALITY

STARTING: STATE 1

+ CONTROL STICK STEERING ALTERS THE FLIGHT DIRECTOR OUTPUT

♦ PROPORTIONAL HEADING RATE COMMANDED

* OUTPUT COMMANDS HELD CONSTANT ALLOWING RETRIM OF STICK

△ ROLL ATTITUDE COMMANDED TO ZERO DEGREES

□ IF ACTSCRSSDEF IS TRUE, UNDEF CRS WILL BE SET FALSE, INVALID CRS CHG WILL BE SET TO FALSE AND STATE WILL CHANGE AS SHOWN. MIDDLE MARKER WILL BE SET FALSE IN EVENT 7.

IF ACTSCRSSDEF IS FALSE, UNDEF CRS WILL BE SET TO TRUE AND NO STATE CHANGE WILL OCCUR.

STATE \ EVENT		GO-AROUND BUTTON DEPRESSED	HOT HDG REF VALID	CYCLIC CSS BUTTON DEPRESSED	|ROLL ANGLE| ≤ 5 DEG AND NOT HOVER	HEADING SELECT BUTTON ON	NAV BUTTON ON AND NAV BEAM TRACK TRUE	NAV BUTTON ON & NAV BEAM TRACK FALSE	APPR BUTTON ON AND LAT. BEAM TRACK TRUE	APPR BUTTON ON AND LAT. BEAM TRACK FALSE	|ROLL ANGLE| ≥ 5 DEGREES	(NAV BEAM CAPT & NOT NAV MODE ON) OR NAV CAPT TRUE	LATERAL BEAM CAPTURE TRUE	NAV BEAM TRACK TRUE	LATERAL BEAM TRACK TRUE	NAV SEQUENCE	COURSE NOT DEF OR ACT CRS CHGD	HOV BUTTON ON & HOVER COND. TRUE	HOVER COND. FALSE	FLIGHT DIRECTOR OFF & AP OFF
1. ROLL ATTITUDE HOLD & HEADING HOLD ARM		1△	1	1+	2	5	8□	3□	11□	4□	-	-	-	-	-	-	-	14	-	1
2. HEADING HOLD		1△	1	2+	-	5	8□	3□	11□	4□	-	-	-	-	-	-	-	14	-	1
3. HEADING HOLD AND NAVIGATION ARM		1△	1	3+	-	6	1	1	11□	4□	-	8	-	-	-	-	1	14	-	1
4. HEADING HOLD AND APPROACH ARM		1△	1	4+	-	7	8□	3□	1	1	-	-	11	-	-	-	1	14	-	1
5. HEADING SELECT		1△	1	5+	-	1	8□	6□	11□	7□	-	-	-	-	-	-	-	14	-	1
6. HEADING SELECT AND NAVIGATION ARM		1△	1	6+	-	3	5	5	11□	7□	-	8	-	-	-	-	5	14	-	1
7. HEADING SELECT AND APPROACH ARM		1△	1	7+	-	4	8□	6□	5	5	-	-	11	-	-	-	5	14	-	1
8. NAVIGATION CAPTURE		1△	1	8+	-	5	1	1	11□	4□	9	-	-	-	-	3	1	14	-	1
9. NAVIGATION CAPTURE AND TRACK ARM		1△	1	9+	-	5	1	1	11□	4□	-	-	-	10	-	3	1	14	-	1
10. NAVIGATION TRACK		1△	1	10+	-	5	1	1	11□	4□	-	-	-	-	-	3	1	14	-	1
11. APPROACH CAPTURE		1△	1	11+	-	5	8□	3□	1	1	12	-	-	-	-	4	1	14	-	1
12. APPROACH CAPTURE AND TRACK ARM		1△	1	12+	-	5	8□	3□	1	1	-	-	-	-	13	4	1	14	-	1
13. APPROACH TRACK		1△	1	13+	-	5	8□	3□	1	1	-	-	-	-	-	4	1	14	-	1
14. HOVER MODE HEADING HOLD		1△	1	14+	-	5	8□	3□	11□	4□	-	-	-	-	-	-	-	1	2	1

Depressing the go-around switch will instruct the autopilot to command wings level, 500 fpm collective and a 50 knot preassigned airspeed hold.

CONTROL STICK STEERING - Control Stick Steering (CSS) provides the pilot with the capability for manual maneuvering of the aircraft without the need to disengage and reengage the autopilot. The SCAS system will also be retained to aid in aircraft stability.

The CSS mode is engaged by continuous pressure on the cyclic CSS button. Operation of the CSS button causes immediate release of the autopilot outer loops and allows the pilot to assume manual control, while autopilot control functions are placed in a synchronization state.

The CSS mode has no effect on the IAS HOLD or the IAS SELECT speed modes. Upon release of the CSS button, the previously selected airspeed will be commanded. The pitch attitude hold mode will remain in synchronization while in CSS so that current pitch attitude will be held upon CSS button release.

Since all engaged modes remain coupled (in synchronization) during operation of the CSS mode, their annunciators will continue to show on the annunciator panel. The CSS mode is not separately annunciated.

The transition of the modes of pitch axis are specified in Table 5-4.

IAS SELECT - When the IAS SEL mode is engaged, the control laws for the flight director and autopilot will cause the indicated airspeed to approach the selected value on the IAS select display on the airspeed indicator. When the actual airspeed is within 2 feet/second of the specified value, IAS SEL will automatically transition to IAS HOLD.

IAS SEL is engaged by first selecting the desired new airspeed via the IAS position on the altitude selector and then pushing the IAS SEL mode pushbutton. IAS SEL will be presented on the annunciator panel.

When the go-around mode is selected, IAS SEL wil be engaged with a selected value of 50 knots. Transition to IAS HOLD will then occur automatically as defined previously.

IAS HOLD - The IAS HOLD mode computes the pitch commands to the autopilot and/or flight director to hold indicated airspeed. The reference airspeed is the selected value on the IAS display if IAS HOLD is engaged automatically in transition from IAS SEL. Otherwise, the reference airspeed is equal to the actual value coincident with mode engagement.

ORIGINAL PAGE IS
OF POOR QUALITY

Table 5-4: SPEED MODE LOGIC MACHINE

STARTING: STATE 0

* AT 50 KNOTS SELECTED

\+ CSS ALTERS OUTPUT OF FLIGHT DIRECTOR

IAS ENGAGE FLAG - TRUE WHEN/SEL IAS-ACT IAS/≤1 KNOT

COLLECTIVE-SPEED FLAG - FPA SEL ENG TRUE OR FPA HOLD TRUE OR VNAV ENG TRUE

STATE \ EVENT	CO-AROUND BUTTON PRESSED	CYCLIC CSS BUTTON DEPRESSED	IAS HOLD BUTTON ON AND IAS VALID	IAS NOT VALID	IAS SELECT BUTTON ON AND IAS VALID	COLLECTIVE SPEED FLAG TRUE	COLLECTIVE SPEED FLAG FALSE	COLLECTIVE MODE - HOVER	FLIGHT DIRECTOR & AP OFF
1. PITCH ATTITUDE HOLD	4*	0+	2	0	4	2	-	0	0
2. IAS HOLD	4*	2+	0	0	4	2	2	0	0
4. IAS SELECT	4*	4+	2	0	0	4	4	0	0

IAS HOLD may be engaged by pushing the IAS HOLD button or by engaging any other speed or vertical mode except go-around when IAS SEL is not engaged. When go-around is engaged, IAS SEL is engaged. IAS SEL transitions to IAS HOLD when the selected airspeed is reached. IAS HOLD can be disengaged by pushing the IAS HOLD button only if no other speed or vertical mode is engaged. Engagement is indicated by IAS HOLD on the autopilot annunciator panel.

5.1.2.5. THE VERTICAL MODES

Autopilot/Flight Director Modes include:

FPA Select	ALT Hold
FPA Hold	VNAV
Go-Around	HOV
Glideslope CPLD	Collective Control Stick Steering
ALT Select	

FLIGHT PATH ANGLE SELECT - The guidance laws in the FPA select mode command a change in the flight path angle to the pilot selected value. When the actual flight path is within 0.2 degrees of the selected angle, FPA SEL converts to FPA HOLD.

FPA SEL may be engaged by first selecting a flight path angle via the FPA position on the altitude selector and then pushing the FPA SEL button. The displayed value may continue to be changed while FPA SEL is engaged.

FPA SEL is disengaged by pushing the FPA SEL button or automatically upon transition to FPA HOLD. The annunciator panel presents FPA SEL upon mode engagement.

FLIGHT PATH ANGLE HOLD - In the FPA HOLD mode, the altitude rate commands necessary to hold a constant airspeed-referenced flight path angle are computed and introduced to the autopilot and flight director. The referenced angle is the selected value on the FPA SEL display when FPA HOLD is engaged automatically in transition from FPA SEL. Otherwise, the referenced angle is equal to the actual angle coincident with the mode engagement. This mode is engaged by pushing the FPA HLD button. It also engages automatically in transition from FPA SEL. FPA HLD causes IAS HLD engagement unless IAS SEL already is engaged. The annunciator panel presents FPA HOLD upon mode engagement.

GO-AROUND - The Go-Around mode assists the pilot in establishing the proper aircraft conditions for missed approach procedures. The go-around switch is located on the collective.

Depressing the go-around switch will instruct the autopilot/flight director to command wings level, hold of existing heading, an altitude rate of 500 fpm and a selected airspeed of 50 knots.

The go-around mode may also be used on takeoff for climbout. When used for takeoff, it may be followed with heading select for continuous heading control during departure. Altitude, navigation, and approach modes may also be armed for automatic capture and guidance during the departure sequence.

The go-around mode is disengaged by the selection of any other vertical autopilot mode. GO-AROUND is displayed for engagement of this mode.

GLIDESLOPE CPLD - The glideslope mode is armed for automatic capture when front course capture has occurred. Automatic glideslope capture occurs as the rotorcraft approaches the beam from above or below.

Upon capture of the glideslope beam, GS CPLD is lighted on the annunciator panel and a capture command is displayed by the command bars. The pilot (or autopilot) controls the rotorcraft to satisfy the command bars.

Upon glideslope capture, altitude hold is cancelled. However, altitude hold may be manually reselected to maintain altitude upon descent to DH if visual contact is not established.

During VOR,RNAV or localizer backcourse approaches, glideslope capture will not occur because the absence of LOC frequency locks out this function.

The approach coupled mode is cancelled by selection of the heading select, navigation, or go-around modes.

ALTITUDE ARM - This mode allows the pilot to select an altitude and upon approaching that selected altitude, obtain an automatic altitude rate command to capture and hold the pre-selected altitude. To operate in this mode the pilot must proceed as follows:

1. Enter the desired altitude on the altitude selector.

2. Depress the altitude arm button on the mode controller. ALT ARM will engage.

3. Use other vertical mode to proceed to the selected altitude (ie. FPA SELECT, FPA HOLD, etc).

ALT ARM is lighted to annunciate activation of this mode.

As the aircraft approaches the selected altitude, the altitude rate command will automatically guide the pilot to it at a low rate. As the aircraft reaches the selected altitude, altitude hold will automatically engage and light on the annunciator panel and altitude arm will disappear.

Altitude arm is disengaged by depressing the altitude arm button, by engaging altitude hold, and by glideslope capture.

ALTITUDE CAPTURE - This provides the transition from altitude select to altitude hold.

ALTITUDE HOLD - This mode will cause a computed collective command to hold the aircraft at the pressure altitude existing at the time it was activated.

The mode is activated either automatically by the altitude capture function, or manually by depressing the altitude button on the mode controller. ALT HOLD is lighted on the annunciator panel when this mode is active.

If the autopilot is engaged, it will automatically hold the rotorcraft at that altitude. Altitude hold engagement causes IAS HOLD to engage.

The altitude hold mode is cancelled by automatic glideslope capture or selection of the altitude select FPA SEL, VNAV, or go-around modes.

VNAV - The VNAV mode provides computed collective command to capture and maintain a vertical track, in ascent or descent, to a predetermined altitude with respect to an RNAV waypoint (which can be over a VORTAC). To operate in this mode, the pilot must proceed as follows:

1. Establish an RNAV waypoint on the CDU and select RNAV mode.

2. Establish the course to the waypoint.

3. Set the desired altitude over the waypoint on the CDU.

4. Set along-track bias to reach desired altitude offset along course from the waypoint.

5. Set the approximate VORTAC station elevation to obtain slant range correction.

The vertical track angle will then be displayed on the PFD. As the rotorcraft flies toward the waypoint at a constant altitude, the vertical track angle (VTA) will slowly increase or decrease. When the desired vertical track angle is indicated on the display scale, the pilot engages vertical navigation guidance by depressing the vertical navigation button on the mode controller. The autopilot/flight director will then control the aircraft in the vertical plane to fly a straight path from engage point to the preselected waypoint altitude at the offset position.

VNAV CPLD will be lighted on the annunciator panel and the vertical track angle is indicated on the PFD display scale and on the altitude selector. Engagement of VNAV causes IAS HOLD and ALT ARM to engage.

The PFD command bars will deflect to command the pitch and collective maneuver to acquire and hold the flight path and airspeed.

Engagement of the VNAV CPLD mode also automatically activates the altitude select function to capture the selected altitude. As the rotorcraft approaches the selected altitude, an altitude rate command will automatically guide the pilot to it at a low rate. As the rotorcraft reaches the selected altitude, vertical navigation coupled will automatically disengage and altitude hold will automatically engage, altitude hold will light on the annunciator panel, and altitude select will disappear. The command bars on the PFD will call for level flight at the selected altitude and airspeed.

If the autopilot is engaged, capture and holding of the vertical track angle and subsequent capture and holding of the desired altitude will be automatic.

Waypoint distance bias is provided to permit the pilot to acquire a desired altitude at a point short of the waypoint. For example, the waypoint could be established at a runway threshold with the desired MDA altitude selected and the waypoint distance biased 1 to 2 miles short to position the rotorcraft for a straight-in approach. Waypoint bias adjustment should not be made while VNAV is coupled.

The VNAV coupled mode is deactivated by selection of any other vertical mode or by pushing VNAV.

HOVER HOLD - The HOVER HOLD mode provides directional and altitude holding capability when the hover conditions exist. (Hover conditions are defined in section 5.1.1.1)

The hover hold mode is engaged by depressing the HOV button on the mode control panel. It provides altitude hold of the altitude present at the time of engagement. The heading at the time of engagement or if the foot pedal force of 8 pounds is exceeded, commanded heading is so held.

Disengagement of hover hold may be accomplished by pushing the HOV pushbutton or by any other mode selection. Display of HOV HOLD is provided upon activation of this mode.

COLLECTIVE CONTROL STICK STEERING - This mode is engaged by pressing the collective CSS switch on the collective stick. When engaged, the collective parallel servo is stopped and the associated clutch is disabled. Under the basic vertical control law, the altitude rate command signal is synchronized to the concurrent altitude rate, and while the command button remains pressed, changes in collective stick position result in changes in rotor blade pitch. When collective CSS is released, the altitude rate command signal is held constant at the concurrent value, the collective parallel servo clutch is re-engaged and resumes operation.

All modes except VNAV and ALT HOLD remain in continuous synchronization with the pilot's aircraft maneuvers so that upon release of the CSS button, all previously engaged modes will smoothly reassume control of the aircraft unless decoupled or reporgrammed by the pilot.

When in altitude hold, the aircraft will hold that altitude which was present upon release of the CSS button. When in VNAV, the aircraft will revert to altitude select and altitude rate hold when the CSS button is released.

Since all engage modes remain coupled, execpt VNAV, (in synchronization) during operation of the CSS mode, their annunciators will continue to show on the annunciator panel. The CSS mode is not separately annunciated.

The transition of the modes of the collective axis are specified in Table 5-5. The glideslope mode is armed from the approach-lateral control machine when the lateral beam is captured and the approach is on the backcourse of the localizer.

Table 5-5: VERTICAL MODE LOGIC MACHINE

STARTING: STATE 0

+ CSS ALTERS THE FLIGHT DIRECTOR OUTPUT

GLIDESLOPE FLAG = LOC VALID AND NOT BACKCOURSE VNAV ENG VALID = VNAV VALID AND VTA VALID

HOVER CONDITION TRUE - VHT < 25 KNOTS

□ WILL CYCLE BACK TO 3 EVEN IF ALT SEL IS NOT VALID

STATE \ EVENT	GO-AROUND BUTTON DEPRESSED	COLLECTIVE CSS SWITCH ON	ALTITUDE BUTTON ON AND ALTITUDE VALID	ALT ARM BUTTON ON & (ALT VALID & ALT SEL VALID)	ALT SEL NOT VALID OR BARO ALT NOT VALID	VNAV BUTTON ON & VNAV ENG VALID	VNAV NOT VALID	LAT MACHINE IN APPR & FS FLAG TRUE & G/S ENG TRUE	LAT MACHINE NOT IN APPR OR BACKCOURSE TRUE	GLIDESCOPE NOT VALID	GLIDESCOPE VALID AND GS ENG TRUE	ALTITUDE CAPTURE TRUE	ALTITUDE ENGAGE TRUE	FPA HOLD BUTTON ON	FPA SELECT BUTTON ON	HOVER BUTTON ON AND HOVER CONDITION TRUE	FPA CAPTURE FLAG TRUE	HOVER CONDITION FALSE	FLT DIR. OFF & AP OFF	ACTIVE UP ALT CHG
0. ALTITUDE RATE HOLD	1	0+	2	3	-	5	-	7	-	-	-	-	-	9	11	13	-	-	0	-
1. GO-AROUND	1	0+	2	4	-	5	-	-	-	-	-	-	-	9	11	13	-	-	0	-
2. ALTITUDE HOLD	1	2+	0	3	0	5	-	7	-	-	-	-	-	9	11	13	-	-	0	-
3. ALTITUDE SELECT AND ALTITUDE RATE HOLD	1	3+	2	0	0	5	-	7	-	-	-	6	-	10	12	13	-	-	0	0
4. ALTITUDE SELECT AND GO-AROUND	1	3+	2	1	1	5	-	7	-	-	-	6	-	10	12	13	-	-	0	1
5. ALTITUDE SELECT AND VNAV	1	3+	2	3□	0	3	3	7	-	-	-	6	-	9	11	13	-	-	0	0
6. ALTITUDE CAPTURE	1	6+	2	0	0	6	-	7	-	-	-	-	2	9	11	13	-	-	0	2
7. GLIDESLOPE COUPLED	1	0	2	7	-	7	-	7	0	8	-	-	-	7	7	7	-	-	0	-
8. GLIDESLOPE STANDBY	1	0	2	8	0	8	-	7	0	-	7	-	-	8	8	8	-	-	0	-
9. FPA HOLD	1	9+	2	10	-	5	-	7	-	-	-	-	-	0	11	13	-	-	0	-
10. ALTITUDE SELECT AND FPA HOLD	1	10+	2	9	9	5	-	7	-	-	-	6	-	3	12	13	-	-	0	9
11. FPA SELECT	1	11+	2	12	-	5	-	7	-	-	-	-	-	9	0	13	9	-	0	-
12. FPA SELECT AND ALTITUDE SELECT	1	12+	2	11	11	5	-	7	-	-	-	6	-	10	3	13	10	-	0	11
13. HOVER HOLD	1	13+	2	3	0	-	-	-	-	-	-	-	-	9	11	0	-	0	0	-

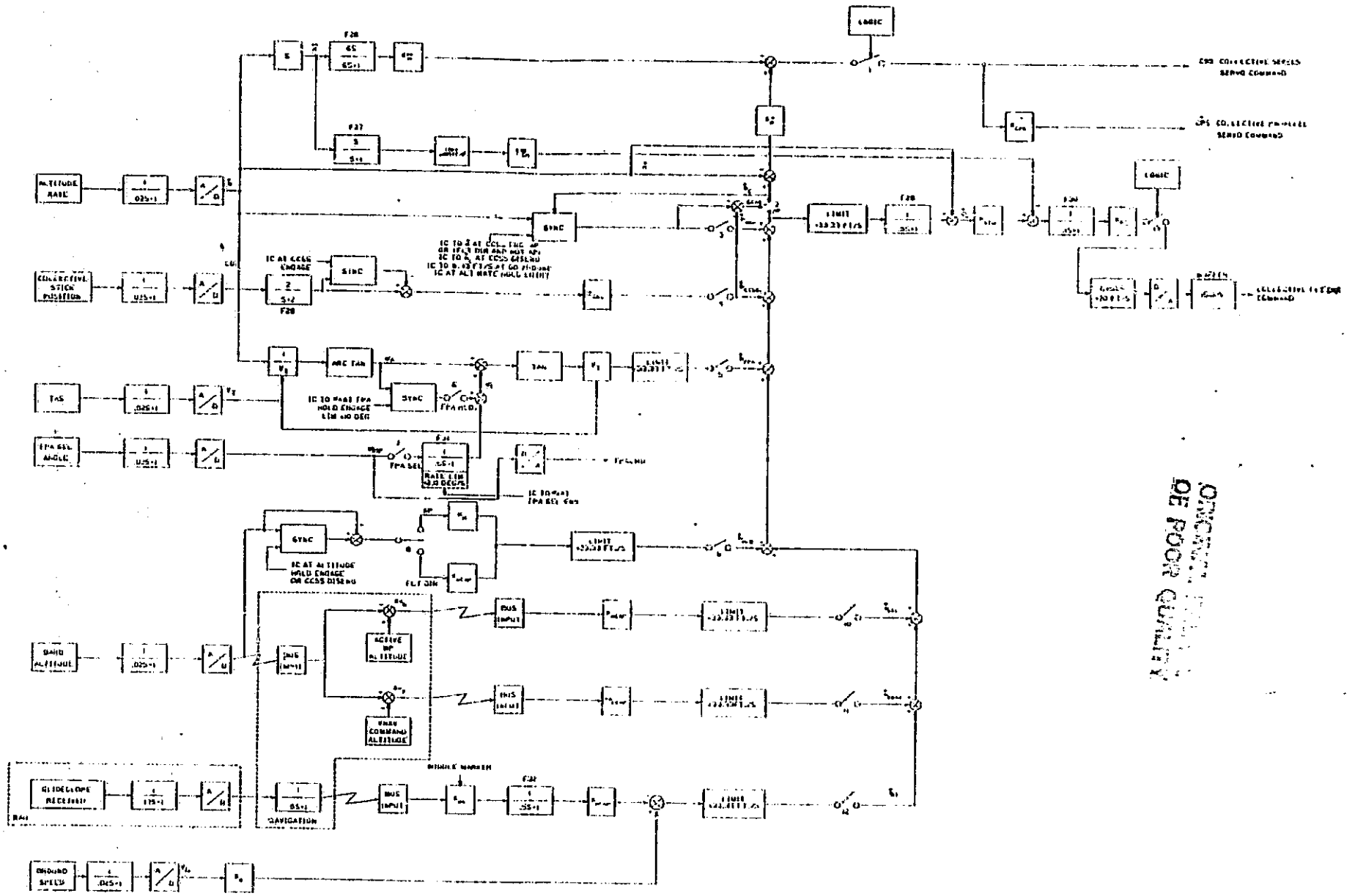

Figure 5-9: KODAAS COLLECTIVE AXIS CONTROL LAWS

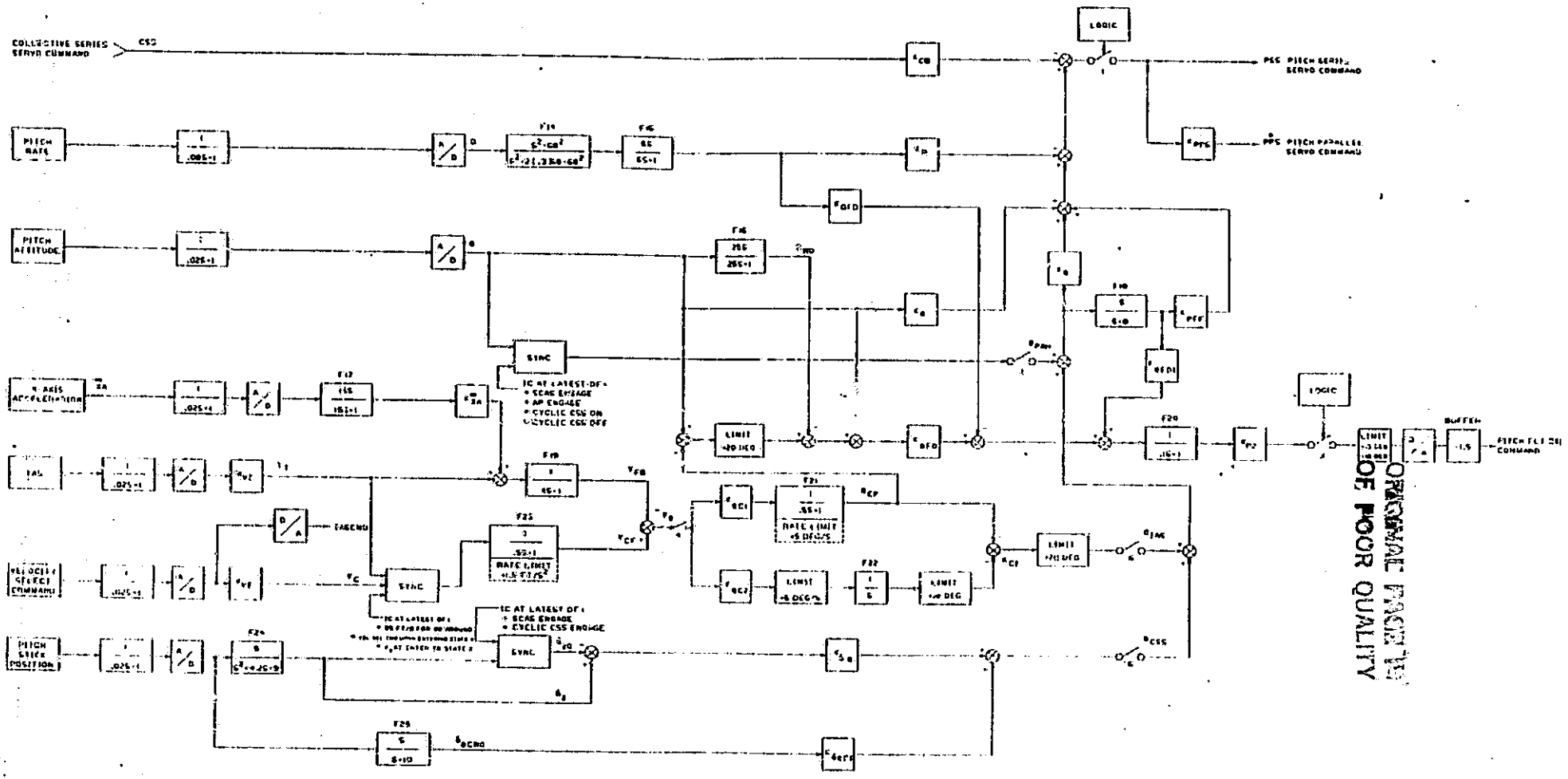

Figure 5-10: RODAAS PITCH AXIS CONTROL LAWS

ORIGINAL PAGE IS OF POOR QUALITY

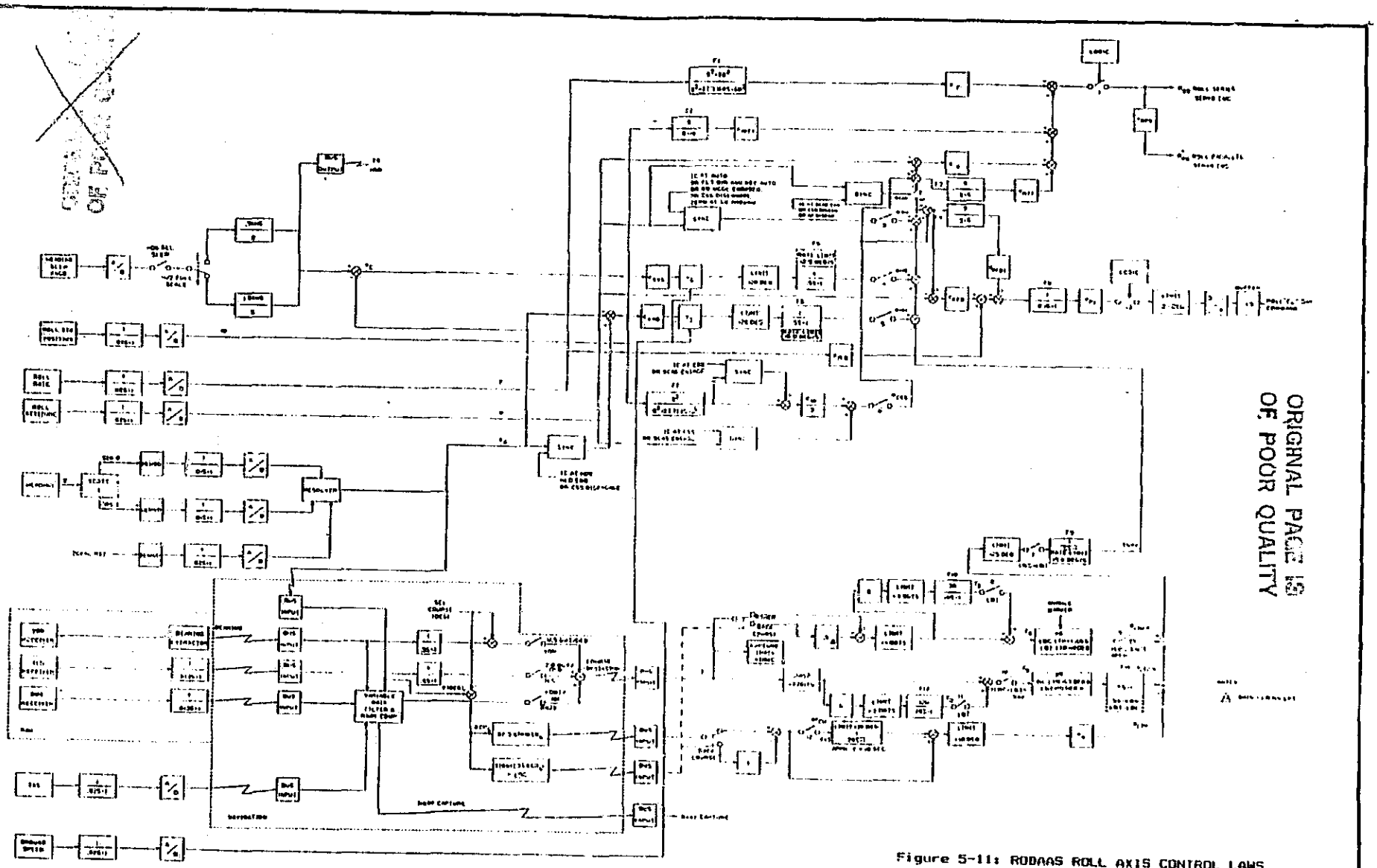

Figure 5-11: RODAAS ROLL AXIS CONTROL LAWS

ORIGINAL PAGE IS
OF POOR QUALITY

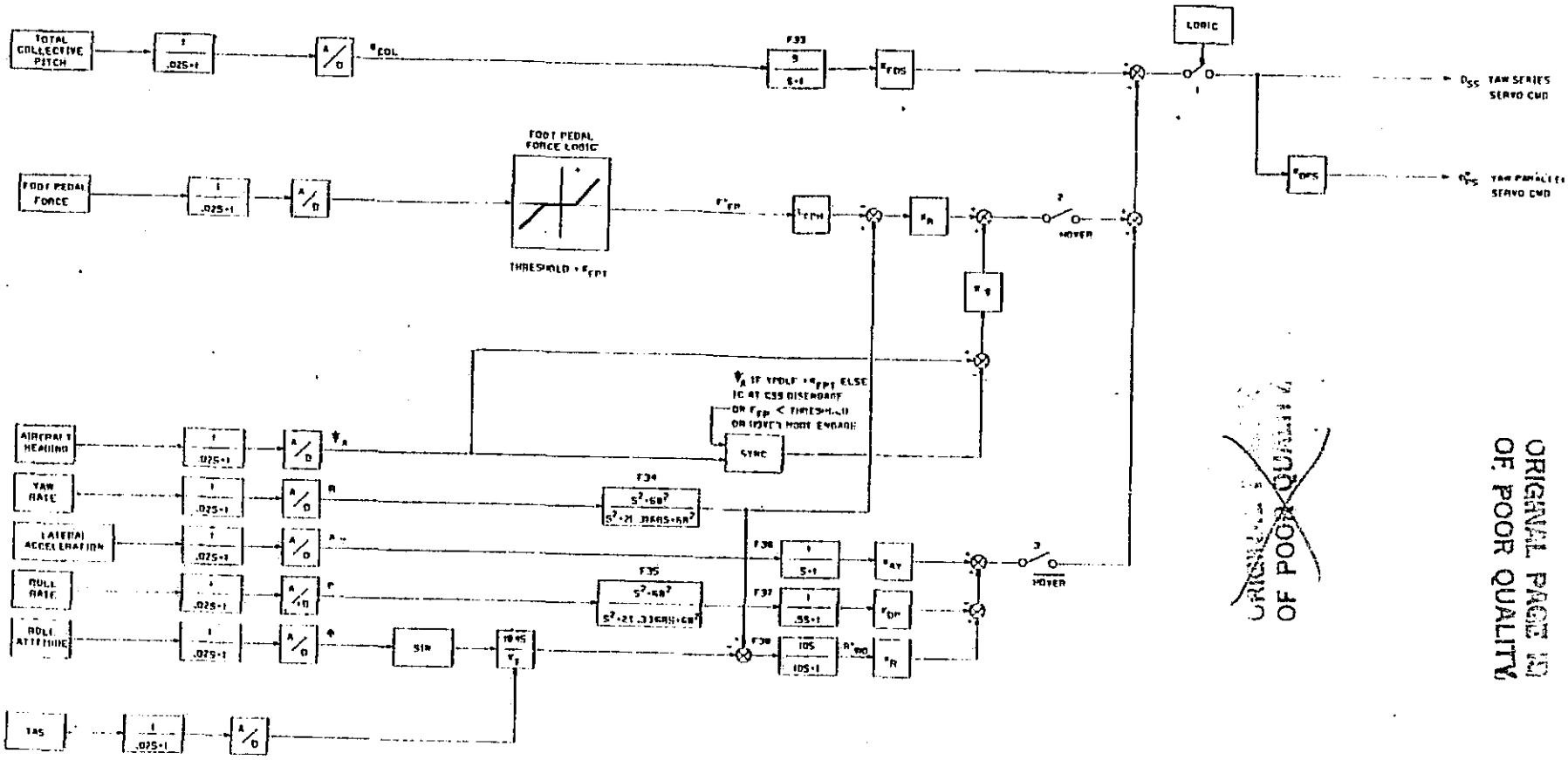

Figure 5-12: RODAAS YAW AXIS CONTROL LAWS

ORIGINAL PAGE IS OF POOR QUALITY

5.1.2.2.1 Autopilot/Flight Director Control Laws - The Autopilot and flight director control laws, described below, are summarized in Figures 5-9 thru 5-12 for collective, pitch, roll and yaw axis. Terms included are discussed in the following paragraphs.

5.1.2.2.1.1 Collective Axis Terms

5.1.2.2.1.1.1 Collective Output Equations

Collective Series Servo Command -

$$C_{SS} = K_{\dot{h}} (\dot{h}_c - \dot{h}) - K_{\ddot{h}} \frac{6S}{6S + 1} \ddot{h}$$

where

C_{SS} = collective series servo command (deg θ_{COL})

$K_{\dot{h}}$ = altitude rate gain
= 0.1875 deg/ft/s

$\dot{h}_c$ = $\dot{h}_{ARH}$ if collective button out
= $\dot{h}_{ARH} + K_{COL} (\delta_1 - \delta_{10})$ if collective button in

$\dot{h}_{ARH}$ = most recent of

- $\dot{h}$ concurrent with collective CSS, AP, FD, or AH rate hold engagement.
- $\dot{h}_c$ concurrent with release of collective CSS button.
- 8.33 ft/sec at go-around engagement.

K_{COL} = collective stick sensitivity
= 10 ft/s/in

$$\delta_1 = \left[\frac{2}{S + 2} \right] \delta_{COL}$$

δ_{COL} = collective stick position (in)

δ_{10} = δ_1 concurrent with collective CSS button engagement

$\ddot{h}$ = altitude acceleration (ft/s^2)

$K_{\ddot{h}}$ = altitude acceleration gain
= 0.025 deg/ft/s^2

Collective Parallel Servo Command -

$$\dot{C}_{PS} = K_{CPS} \cdot C_{SS}$$

where

$\dot{C}_{PS}$ = collective parallel servo rate command (deg θ_{col}/sec)

K_{CPS} = collective parallel servo gain
= 1.6 deg/s/deg

Collective Flight Director Command -

δ_{FD} = BIASED OUT OF VIEW WHEN FLT DIR NOT ENGAGED.

$$= \left[\frac{1}{.1S + 1}\right] (K_{CFD}\, \dot{h}_E - K_{c\ddot{h}}\, \ddot{h}_E)$$

where

δ_{FD} = collective flight director command (fraction of full scale)

K_{CFD} = collective flight director altitude gain
= 1.0 full scale/ft/s

K_{ch} = collective flight director altitude acceleration gain
= 0.007 FS/S^2

$\ddot{h}_E$ = washout altitude acceleration

$$= \ddot{h} \left[\frac{S}{S + 1}\right]$$

$\ddot{h}$ = altitude acceleration

$$\dot{h}_E = \begin{bmatrix} \text{limit } \dot{h}_C \\ (\pm 33.33 \text{ ft/s}) \\ (\pm 2000 \text{ ft/min}) \end{bmatrix} \begin{bmatrix} \frac{1}{.5S + 1} \\ \text{rate limit} \\ \pm 1.5 \text{ ft/s}^2 \end{bmatrix} - \dot{h}$$

where

$\dot{h}_E$ = altitude rate error (ft/s)

$\dot{h}_C$ = raw altitude rate command (ft/s)

$\dot{h}$ = altitude rate (ft/s)

5.1.2.2.1.1.2 Collective Mode Term Equations

Collective Synchronization -

$\dot{h}_{ARH}$ = the $\dot{h}$ coincident with the most recent of:

- basic mode engagement
- AUTOPILOT engagement
- FLT DIR engagement if AUTOPILOT not engaged
- Engagement/release of CSS button

Flight Path Angle Hold -

$$\dot{h}_{FPA} = V_T \left[\tan \gamma_C\right]$$

where

V_T = true airspeed

γ_C = γ coincident with FPA HOLD BUTTON selection where γ $\tan^{-1}(\dot{h}/_{VT})$ = flight path angle (deg)

γ_C = γ coincident with FPA SEL TO FPA HOLD TRANSITION

Flight Path Angle Select -

$$\dot{h}_{FPA} = V_T \left[\tan \gamma_C\right]$$

where

γ_C = γ_{dSP} = selected FPA angle

The FPA capture flag is true when $\left|\gamma_C - \gamma\right| \leq 0.2$ deg.

Altitude Hold -

$$\dot{h}_{HLD} = K_n (h_{SEL} - h) \quad \text{(AUTOPILOT)}$$
$$= K_{HCAP} (h_{SEL} - h) \quad \text{(FLT DIR ONLY)}$$

where

k_h = altitude hold gain
= 0.5 ft/s/ft

h = altitude above sea level

h_{SEL} = altitude selected

K_{hCAP} = altitude capture gain
= 0.125 ft/s/ft

If the ALT HLD button is pushed when ALT HLD not previously engaged, ALT HLD becomes engaged and

$h_{SEL} = h_{DSP} = h$ coincident with ALT HLD selection.

Altitude Select -

If the ALT ARM button is pushed and this mode was not previously engaged, ALT ARM will engage. Altitude select maybe on with all vertical control modes (FPA select, FPA hold, etc) and with all pitch control modes (pitch attitude hold, airspeed select, airspeed hold, etc. When the altitude hold engage flag is true, ACT select will transition to altitude hold.

$$\dot{h}_{SEL} = K_{hCAP} (h_{SEL} - h)$$

where

$h_{SEL} = h_{dsp}$ coincident with ALT SEL engagement

K_{hCAP} = altitude capture gain
= 0.125 ft/s/ft

ALT HLD engage flg true when

$$\text{sign}\ (hsel - h) \neq \text{sign}\ (h_{SEL} - h)\ z^{-1}$$

Alt capture flag is true when:

$$\text{sign}\left[((hsel - h) * Khcap) - \dot{h}\right] \neq$$
$$\text{sign}\left[((hsel - h) * Khcap) - \dot{h}\right] z^{-1}$$

Vertical Navigation (VNAV) -

$$\dot{h}_{VNAV} = K_{hcap} \; \Delta hr$$

where

$$\Delta hr \begin{cases} = \text{vertical navigation deviation} \\ = (h_{VNAV\ CMD} - h) \\ \quad \text{altitude} \end{cases}$$

$$Khcap \begin{cases} = \text{altitude capture gain} \\ = 0.125 \text{ ft/s/ft} \end{cases}$$

Glideslope Coupled -

$$\dot{h}_{GS} = K_{hCAP} \left[\frac{-1}{.5S + 7}\right] h \; K_{GS} \; (\gamma dev) + V_G K_G$$

where

K_{hCAP} = altitude captive gain
= 0.125 ft/s/ft

K_{GS} = 1382 ft/deg
= 183 ft/deg after middle marker sensed

γ_{dev} = ILS glideslope deviation (deg)

V_G = ground speed

K_G = tan γ_{REF}

γ_{REF} = γ_{ILS} = 3 deg

5.1.2.2.1.2 Pitch Axis Terms

5.1.2.2.1.2.1 Pitch Output Equations

Pitch Series Servo Command -

$$P_{SS} = \begin{cases} = 0 \text{ when SCAS not engaged.} \\ = K_{PFF}\left[\frac{S}{S+8}\right]\theta_C + K_\theta(\theta_C - \theta) - K_q\left[\frac{6S}{6S+1}\right]\left[\frac{S^2+68^2}{S^2+2\ .3\ 68S+68^2}\right] q - K_{CB}\,C_{SS} \text{ (AUTOPILOT)} \\ = K_{PFF}\left[\frac{S}{S+8}\right]\theta_C + K_\theta(\theta_C - \theta) - K_q\left[\frac{6S}{6S+1}\right]\left[\frac{S^2+68^2}{S^2+2\ .3\ 68S+68^2}\right] q - K_{CB}\,C_{SS} + (\delta_2 - \delta_{20})\,K_{\delta\theta} + K_{\delta\theta FF}\left[\frac{S}{S+10}\right]\delta\theta \quad \text{(CSS)} \end{cases}$$

where

P_{SS} = pitch series servo command (deg)

K_{PFF} = pitch command feed-forward gain
= 3 deg/deg

$$\theta_C \begin{cases} = \theta_{CO} \text{ if research CSS button in second detent} \\ = \theta_{CO} + K_{\delta\theta}\ (\delta_2 - \delta_{20}) \end{cases}$$

θ_{CO} = θ concurrent with CSS engagement, disengagement

$$K_{\delta\theta} \begin{cases} = \text{pitch stick sensitivity} \\ = 4 \text{ deg/in} \end{cases}$$

$$\delta_2 = \left[\frac{9}{2_S + (3)(1.4)\ S + 9}\right] \delta\theta$$

δ_{20} = Most recent of
δ_2 concurrent with CSS engagement

q = pitch rate (deg/s)

K_q = pitch rate gain
= 0.45 deg/deg/s

δ_θ = pitch stick position (in)

$K_{\delta\theta FF}$ = pitch stick feed forward gain
= 1.35 deg/in

Pitch Parallel Servo Command -

$$\dot{P}_{PS} = K_{PPS}\ P_{SS}$$

where

$\dot{P}_{PS}$ = pitch parallel servo rate command (deg/s)

K_{PPS} = pitch parallel servo gain
= 0.75 deg/s/deg

Pitch Flight Director Command -

$$\delta_{\theta FD} \begin{cases} = \text{BIASED OUT OF VIEW} \\ = \underset{+15_1-10\ \text{deg}}{\text{limit}} \left[\frac{1}{.1S + 1}\right]\left[K_{\theta FD}\left[\left[\underset{\pm 20\ \text{deg}}{\text{limit}}\ (\theta-\theta_{CP})\right] - \theta - \theta_{WO}\right] - K_{qFD} \cdot q_{WO} + K_{\theta FD1} \cdot \theta_{CWO}\right] \end{cases}$$

where

$\delta_{\theta FD}$ = pitch flight director command (deg 1 in = 15 deg)

$K_{\theta FD}$ = pitch flight director gain
= 1 deg/deg

$$\theta_{WO} = \left[\frac{25S}{25S + 1}\right] \bullet \theta$$ (initialized when FLT DIR engaged if AUTOPILOT not engaged)

K_{qFD} = pitch rate flight director gain
= 0.5 deg/deg/s

$$q_{WO} = \left[\frac{6S}{6S + 1}\right] \bullet q$$

$K_{\theta FD1}$ = pitch flight director feed forward gain
= 3.0 deg/deg

$$\theta_{CWO} = \theta_C \bullet \left[\frac{S}{S + 8}\right]$$

5.1.2.2.1.2.2 Pitch Mode Term Equations

Pitch Synchronization -

θ_C = θ coincident with AUTOPILOT engagement

$$\theta_C = \text{limit}\left[\theta_{CP} + \theta_{CI}\right]$$
($\pm$20 deg)

$$\theta_{CP} = (-K_{\theta C1} \quad V_E) \left[\begin{array}{c}\frac{1}{.5S + 1} \\ \text{rate limit} \\ \pm 5 \text{ deg/s}\end{array}\right]$$ all modes

$$\theta_{CI} = \underset{(\pm 10 \text{ deg})}{\text{limit}} \left[\frac{1}{S}\left[\underset{(\pm 5 \text{ deg})}{\text{limit}} \left[-K_{\theta C2} \bullet V_E\right]\right]\right]$$

$$V_E = \left[\left[\begin{array}{c}\frac{1}{.5S + 1} \\ \text{rate limit} \\ \pm 1.5 \text{ ft/s}^2\end{array}\right] \left[V_C\right] - V_{FB}\right]$$

V_{FB} = V_{TE} true airspeed for IAS SEL/HOLD modes

where

θ_C = pitch attitude command (deg)

θ_{CP} = proportional component of θ_C

θ_{CI} = integral component of θ_C

V_E = velocity error (ft/s)

$K_{\theta C1}$ = proportional velocity gain all modes (deg/ft/s)
= 0.5 deg/ft/sec

$K_{\theta C2}$ = integral velocity gain
= 0.05 deg/ft/s

Airspeed Hold -

$$V_{FB} = \left[\frac{1}{4S + 1}\right] \left[V_T + K_{\ddot{X}a} \left[\frac{15S}{15S + 1}\right] \ddot{X}_a\right]$$

where

V_T = true airspeed (ft/s)

$\ddot{X}_a$ = aircraft x-axis acceleration (ft/s^2)

$K_{\ddot{X}a}$ = 4

5.1.2.2.1.3 Roll Axis Terms

5.1.2.2.3.1 Roll Output Equations

Roll Series Servo Command -

= 0 when SCAS not engaged

$$RSS = K_{RFF} \left[\frac{S}{S + 6}\right] \phi_C + K_\phi \quad (\phi_C - \phi) - K_p P \frac{S^2 + 68^2}{S^2 + 2 \quad .3 \quad 685 + 68^2} \qquad \text{(AUTO)}$$

$$= K_{RFF} \left[\frac{S}{S + 6}\right] \phi_C + K_\phi \quad (\phi_C - \phi) - K_p P + K_{\delta\phi FF} \left[\frac{S}{S + 10}\right] \delta_\phi \qquad \text{(CSS)}$$

where

R_{SS} = roll series servo command (deg)

K_{RFF} = Roll feed forward gain
= 2.25 deg/deg

ϕ_C = ϕ_{CO} if $K_{\delta\phi}$ $(\delta_3 - \delta_{30})$ otherwise

ϕ_{CO} = ϕ concurrent with CSS engagement

ϕ = vehicle roll attitude (deg)

$K_{\delta\phi}$ = roll stick sensitivity
= 8 deg/in

$$\delta_3 = \left[\frac{1}{\frac{S^2}{3} + \frac{1.4}{3} S + 1} \right] \delta_\phi$$

δ_ϕ = roll stick position (in)

δ_{30} = δ_3 concurrent with CSS engagement

K_ϕ = roll attitude gain
= 0.5 deg/deg

K_P = roll rate gain
= 0.2125 deg/deg/s

P = roll rate (deg/s)

$K_{\delta\phi FF}$ = roll stick feed forward gain
= 0 deg/in

C-2

Roll Parallel Servo Command -

$$\dot{R}_{PS} = K_{RPS} \cdot R_{SS}$$

where

$\dot{R}_{PS}$ = roll parallel servo rate command (deg/s)

K_{RPS} = roll parallel servo gain
= 0.125 deg/s/deg

Roll Flight Director Command -

$\delta\phi_{\emptyset FD}$ = BIASED OUT OF VIEW (FLT DIR NOT ENGAGED)

$$= \left[\frac{1}{.1S + 1}\right] \left[(\phi_C - \phi) - K_{pFD}p + K_{\phi PF1} \quad \phi_{CWO}\right]$$

where

$\delta_{\phi FD}$ = roll flight director bar position (LSB = 0.9/667 in, F.S. = 1 inch)

$K_{\phi FD}$ = roll flight director position gain
= 0.015 in/deg

K_{pFD} = roll flight director rate gain
= 0.4 deg/deg/s

P = roll rate (deg/s)

$K_{\phi FD1}$ = roll flight director feed forward gain
= 2.0 deg/deg

$$\phi_{CWO} = \phi_C \left[\frac{S}{S + 6}\right]$$

Roll Synchronization -

ϕ_C =
- ϕ coincident with most recent of:
  - AUTO engagement
  - FLT DIR engagement if AUTOPILOT not engaged
  - All other modes disengage and AUTO or FLT DIR remain engaged.
- 0 at go-around engagement

ORIGINAL PAGE IS
OF POOR QUALITY

Roll Control -

$$\phi_C \begin{cases} = \left[\dfrac{1}{.5S+1}\right]_{\substack{\text{rate limit} \\ \pm 2.5\ \text{deg/s}}} \left[\begin{matrix}\text{limit} \\ \pm 20\ \text{deg}\end{matrix} \quad \phi'_C\right] & \text{(HDG SEL ENGAGED)} \\[2ex] = \left[\dfrac{1}{.5S+1}\right]_{\substack{\text{rate limit} \\ \pm 5.0\ \text{deg/s}}} \left[\begin{matrix}\text{limit} \\ \pm 20\ \text{deg}\end{matrix} \quad \phi'_C\right] & \text{(HDG HOLD ENGAGED)} \\[2ex] = \left[\dfrac{1}{.5S+1}\right]_{\substack{\text{rate limit} \\ \pm 5.0\ \text{deg/s}}} \left[\begin{matrix}\text{limit} \\ \pm 25\ \text{deg}\end{matrix} \quad \phi'_C\right] & \text{(NAV MODES ENGAGED)} \end{cases}$$

where

ϕ_C = ROLL ATTITUDE command (deg)

$$\phi'_C \begin{cases} = K_{\psi VG} \cdot V_G \cdot \psi_E & \text{in HDG SEL/HOLD MODE} \\[2ex] = -K_{DY}\left(D_Y + \tau_{DY}\dot{D}_Y\right) + \left[\begin{matrix}\text{limit} \\ \pm 1\ \text{deg}\end{matrix} \left[\dfrac{1}{S}\left[\begin{matrix}\text{limit} \\ \pm 1\ \text{deg/s}\end{matrix} \left(K_{DI} D'_Y\right)\right]\right]\right] & \text{otherwise} \end{cases}$$

where

V_G = ground velocity (ft/s)

ψ_E = heading error (deg)

$K_{\psi VG}$ = $\dfrac{1}{200}$

K_{DY} = crosstrack displacement gain
= 0.05 deg/ft

D_Y = crosstrack displacement (perpendicular to the right of the track), defined for each mode

$$\tau^{\circ}_{DY} \begin{cases} = \text{ crosstrack rate time constant} \\ = \text{ 20 sec for } D_Y > 2000 \text{ ft} \\ = \text{ 10 sec for } D_Y < 50 \text{ ft} \\ = \text{ a linear blend from 10 sec to 20 sec for } 50 < D_Y < 2000 \text{ ft} \end{cases}$$

$\mathring{D}_Y$ = crosstrack rate, defined in each mode

K_{DI} = crosstrack integral gain
= 0.003 deg/s/ft

D'_Y = D_Y if $\emptyset \leq 5$ deg and if "on course" conditions met
= 0 otherwise

Heading Hold -

$$\psi_E = \psi_{REF} - \psi_A$$

where

ψ_E = heading error (deg)

ψ_{REF} = ψ_A coincident with mode engagement or in transition from HDG SEL (deg)

ψ_A = aircraft heading (deg)

Heading Select -

$$\psi_E = \psi_{REF} - \psi_A$$

Heading HOLD capture flag true when

$$|\psi_E| \leq 5 \text{ deg}$$

Course Datum Command -

$$\phi_{cde} = \begin{cases} K_4 * \Delta\phi_{cd}, \text{ for navigation capture,} \\ K_4 * \left[1 - \underset{(\pm 30^\circ)}{\text{limit}} \left[\dfrac{1}{20\ S + 1}\right]\right] \cdot \Delta\phi_{cd}, \\ \quad \text{for navigation track} \\ \\ K_4 * K_{bc} * \Delta\phi_{cd}, \text{ for approach beam capture,} \\ K_4 * \left[1 - \underset{(\pm 30^\circ)}{\text{limit}} \left[\dfrac{1}{10\ S + 1}\right]\right] \cdot (K_{bc} * \Delta\phi_{cd}), \\ \quad \text{for approach beam track,} \\ 0, \text{ otherwis.} \end{cases}$$

K_4 = course datum gain = 1.5 deg/deg

K_{bc} = +1, not backcourse [-1, backcourse]

$\Delta\phi_{cd}$ = course datum signal from navigation computer

The backcourse flag is true if the magnitude of the course datum signal is greater than 90 degrees.

Lateral Beam Flags - The navigation and approach modes have submodes for arm, capture, capture with track armed, and track. These are switched on flags computed from the following quantities:

$$\Gamma = \Delta\phi_{lb}$$

$$\Gamma_n = \left[\left[\frac{1}{S + 1}\right] \cdot \left[\frac{16\ S}{10\ S + 1} + 1\right] \cdot \Gamma\right]$$

$$\Gamma_a = \left[\left[\frac{1}{S + 1}\right] \cdot \left[\frac{12.75\ S}{1.75\ S + 1} + 1\right] \cdot \Gamma\right]$$

$\Delta\phi_{lb}$ = roll command from the navigation computer for lateral beam deviations

The flag, navigation capture, is true when Γ and Γ_n are of opposite signs. The flag, navigation track, is true when $|\Gamma| \leq 3$ dots and $|\phi| \leq 4$ deg. The flag, lateral beam capture, is true when Γ and Γ_a are of opposite signs. The flag, lateral beam track, is true when $|\Gamma| \leq 3$ dots and $|\theta| \leq 4$ deg.

Lateral Beam Commands for Approach -

$\Gamma = \Delta\phi_{1b}$

$\Delta\phi_{1b}$ = roll command for lateral beam deviations from the navigation computer

$$\Gamma_1 \begin{cases} = 0.5\ \Gamma, \text{ (navigation track or approach beam track) and not localizer} \\ = \Gamma, \text{ otherwise} \end{cases}$$

$$\Gamma_2 \begin{cases} = -0.5 * \Gamma_1, \text{ localizer backcourse and approach beam track} \\ = -\Gamma_1, \text{ localizer backcourse and not approach beam track} \\ = +\Gamma_1, \text{ otherwise} \end{cases}$$

$$\Gamma_{30} = \left[\left[\frac{30\ S}{10\ S + 1}\right] \cdot \Gamma_2\right] \text{ approach beam track}$$

$$\Gamma_3 \begin{cases} = \Gamma_2 + \Gamma_{30}, \text{ approach beam track} \\ = \Gamma_2, \text{ otherwise} \end{cases}$$

$$\Gamma_4 \begin{cases} = \text{limit}_{(\pm 45^\circ)} \cdot \left[K_4 * \Gamma_3\right], \text{ approach beam capture} \\ = \text{limit}_{(\pm 10^\circ)} \cdot \left[K_4 * \Gamma_3\right], \text{ approach beam track} \end{cases}$$

$$K_4 = \begin{cases} 4.0 \text{ deg/dot on NAV track and LOC} \\ 1.0 \text{ deg/dot on NAV capture and LOC} \\ 8.0 \text{ deg/dot on NAV track and VOR} \\ 40.0 \text{ deg/dot on NAV capture and VOR or RNAV} \\ 40.0 \text{ deg/dot on NAV track and RNAV} \\ 2.5 \text{ deg/dot on LOC after middle marker} \end{cases}$$

$$\phi_{1bca} = \begin{cases} \Gamma_4, \text{ approach beam capture or approach beam track} \\ 0, \text{ otherwise} \end{cases}$$

Lateral Beam Command for Navigation -

$$\Gamma = \Delta\phi_{1b}$$

$\Delta\phi_{1b}$ = roll command for lateral beam deviations from navigation computer

$$\Gamma_0 = \left[\left[\frac{120\ S}{20\ S + 1}\right] \cdot \Gamma\right], \text{ for navigation track}$$

$$\Gamma_{50} \begin{cases} = \Gamma + \Gamma_0, \text{ navigation track} \\ = \Gamma, \text{ otherwise} \end{cases}$$

$$\Gamma_5 \begin{cases} = \Gamma_{50}, \text{ navigation capture or navigation track} \\ = 0, \text{ otherwise} \end{cases}$$

$$\Gamma_6 \begin{cases} = \underset{(\pm 10^\circ)}{\text{limit}} \cdot \left[K_5 * \Gamma_5\right], \text{ navigation or lateral beam track} \\ = \underset{(\pm 60^\circ)}{\text{limit}} \cdot \left[K_5 * \Gamma_5\right], \text{ otherwise} \end{cases}$$

$$K5 = \text{navigation gain} = \begin{cases} 4.0 \text{ on NAV track and not RNAV} \\ 5.0 \text{ on NAV track and RNAV} \\ 16.0 \text{ on NAV capture} \end{cases}$$

$$\phi_{1bcn} \begin{cases} \left[\left[\frac{1}{5\ S + 1}\right] \cdot \Gamma_6\right], \text{ navigation capture or navigation track} \\ \text{OR} \\ 0, \text{ otherwise approach beam apture or approach beam track} \end{cases}$$

ORIGINAL PAGE
OF POOR QUALITY

5.1.2.2.1.4 Yaw Axis Terms

5.1.2.2.2.4.1 Yaw Axis Output Equations

Directional (Tail Rotor) Series Servo Command -

$$D_{SS} \begin{cases} = 0 \text{ (CSS or AUTOPILOT NOT engaged)} \\ = K_{FDS}\left[\frac{s}{s+1}\right]\theta_{COL} + K\psi(\psi - \psi_c) + Kr(r - r_c) \quad \text{(hover mode)} \\ = K_{FDS}\left[\frac{s}{s+1}\right]\theta_{COL} + Kr\left[r - W_0\right] - K_{DP}\left[\frac{1}{.5\,s+1}\right]p + \\ \qquad K_{ay}\left[\frac{1}{s+1}\right]ay \end{cases}$$

where

D_{SS} = directional series servo command (deg θ_{TR})

θ_{COL} = total collective pitch (deg)

K_ψ = heading hold gain
= 1 deg/deg

ψ = aircraft heading

$$K_{ay} \begin{cases} = \text{lateral acceleration gain} \\ = 2 \text{ deg/ft/s}^2 \end{cases}$$

ay = lateral accelerometer signal (including gravity component) (ft/s^2)

ψ_c = ψ if $F_{FP} > K_{FPT}$, otherwise most recent of:

- o ψ coincident with CSS disengagement
- o ψ coincident with F_{FP} droping below K_{FPT}
- o $\psi + \frac{1}{K_\psi}(\theta_c - DSS + Kr(r - rc))$ coincident with hover mode engagement.

F_{FP} = foot pedal force (lb)

K_{FPT} = foot pedal force threshold
= 8 lb.

ψ_{HVR} =

θ_C = pitch attitude command (deg)

Kr = yaw rate gain
= 0.6 deg/deg/s

r = yaw rate (deg/s)

rc = $K_{FPH}\, F'_{FP}$ (deg/s)

K_{FPH} = foot pedal sensitivity in hover
= 1 deg/s/lb

$$F'_{FP} \begin{cases} = F_{FP} - K_{FPT} \text{ if } F_{FP} > K_{FPT} \\ = 0 \text{ if } -K_{FPT} \leq F_{FP} \leq K_{FPT} \\ = F_{FP} + K_{FPT} \text{ if } F_{FP} < -K_{FPT} \end{cases}$$

$$r'_{WO} = \left[\frac{10S}{10S + 1}\right]\left[r - \frac{1845}{V_T} \sin \phi\right] \quad \text{(deg/s)}$$

K_{DP} = yaw/roll rate decoupling gain
= 0.1 deg/deg/s

P = roll rate (deg/s)

Directional (Tail Rotor) Parallel Servo Command -

δ_{ps} = $K_{DPS}\, D_{SS}$ if $F_{FP} \leq K_{FPT}$
= 0 otherwise

where

δ_{ps} = directional parallel servo rate command (deg/s/deg)

K_{DPS} = directional parallel servo gain
= 0.4 deg/s/deg

5.1.3. AUTOPILOT/FLIGHT DIRECTOR SYSTEM INTERFACES

The autopilot/flight director function involves a number of devices:

- mode controller
- special switches
- dynamic sensors
- navigation, radio, INS and altitude devices
- mode annunciator
- primary flight display
- pitch servo
- collective servo
- roll and yaw servos

The connections to the computer are illustrated in Figure 5-13. The status of the flight control system is controlled by the switches on the mode controller ,four separate special switches, switches on the control panel for the navigation computer, and by several signals specifying the validity of sensor and radio information. Several capture and track signals also switch modes or submodes.

5.2. NAVIGATION/FLIGHT PLANNING FUNCTION

RODAAS Navigation/Flight Planning Function enables the pilot to plan and store his flight plan, and monitor his status with respect to plan throughout the flight. In flight a moving map display is presented on the RODAAS HSD which pictorially shows the aircraft position relative to the selected waypoint course and NAVAID. In the heading up mode the area directly ahead of the aircraft is mapped straight up from the aircraft symbol. A selectable "North Up" mode is available to allow more convenient comparison of the moving map display with a conventional map. A map slew feature is provided which allows one to view portions of the moving map which are otherwise out of view as a result of map scale.

The RNAV function employs VORTAC-INS with automatic look-ahead to the next waypoint. The pilot is informed when the signal quality associated with the next waypoint is adequate for system navigation.

5.2.1. NAVIGATION/FLIGHT PLANNING CONTROLS AND DISPLAYS

The navigation/flight planning function employs the CDU for data input and readout, and the HSD for the map display. Following is a description of these various CDU and HSD controls and displays.

5.2.1.1. NAVIGATION/FLIGHT PLANNING CDU CONTROLS AND DISPLAYS

CDU Controls and Displays involved with Navigation/Flight Planning are shown in Figure 5-14.

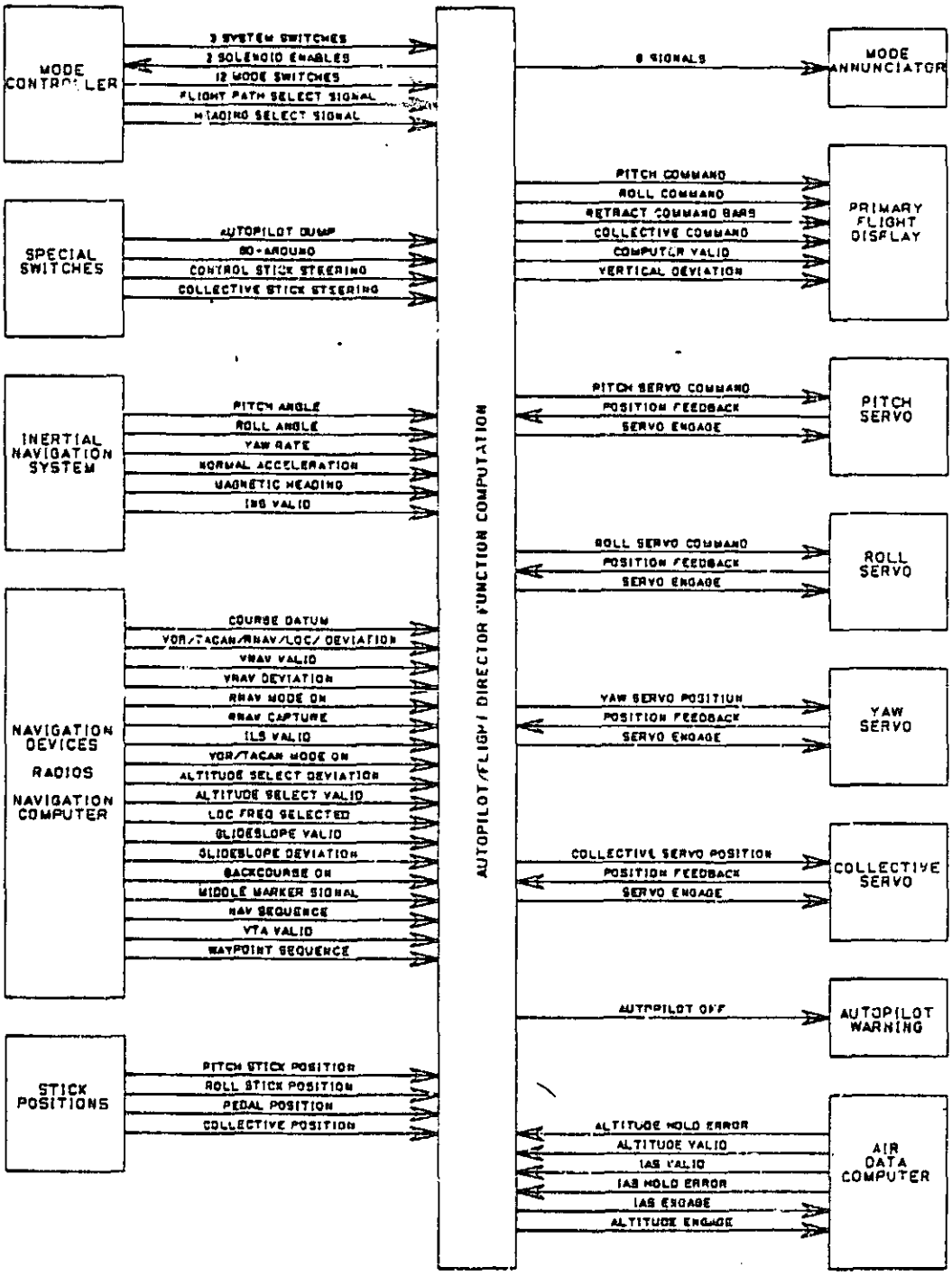

Figure 5-13: AUTOPILOT/FLIGHT DIRECTOR INTERFACES

ORIGINAL PAGE IS
OF POOR QUALITY

The NAVAID DATA information is entered on the NAVAID DATA page, and is tabulated for review under DATA BASE SMY. Waypoint data is entered on the WP DATA page. Flight plan editing is possible using the MAP EDIT page. Flight status is available on the FLT STAT page. Flight plan data may be cleared on the INIT page. The use of these pages is described below.

NAVAID DATA PAGE - NAVAID data is normally entered as a preflight operation.

If NAVAID data pages are selected, the NAVAID page number 1 will appear. It is necessary to access the desired NAVAID number page, if different from NAVAID 1, through the back/fwd control or by direct data entry of the desired NAVAID number on the CDU

NAVAID data can be stored in the EEPROM memory for future use by using the FLT PLN SAVE touchpoint on the INIT page. This data base is then automatically reloaded into the appropriate RAM at power up. Subsequent changes of the NAVAIDs will not affect the stored information unless FLT PLN save is re-initiated.

The NAVAID DATA can be cleared by means of the DATA CLEAR touchpoint on the INIT page.

The N, W, and E associated with LAT/LONG and VARIATION need not be entered if they are applicable. They may be overridden with an alphabetical input proceeding the numerical input if appropriate.

If NAVAID data for a NAVAID used in a waypoint definition is changed, a CDU data entry advisory "NAV USED IN WP DEF" is displayed.

In addition to format checks, entered NAVAID data is checked as follows:

1. Frequencies between 108 and 118 MHz, and multiple of 0.05 MHz.
2. NAVAID number between 0 and 15.
3. Latitude between 0 and 90 degrees, N or S or no prefix.
4. Longitude between 0 and 180 degrees, E or W or no prefix.
5. "Degree" entries between 0 and 59.9 minutes.
6. Magnetic variation prefix E or W, or no prefix and magnitude less than 100.
7. NAVAID ID has three characters.

If the format checks detect a violation, the data entry is not allowed to be entered, and an error message "DATA ENTRY ERROR" is displayed on the CDU.

FLT PLAN SMY - The FLT PLAN SMY page provides menu selection of the waypoint summary (WP SMY) and NAVAID summary (NAVAID SMY).

When "WP SMY" is activated, page one of three waypoint summary pages is displayed. Pages two and three are displayed by toggling the page Fwd/Back control.

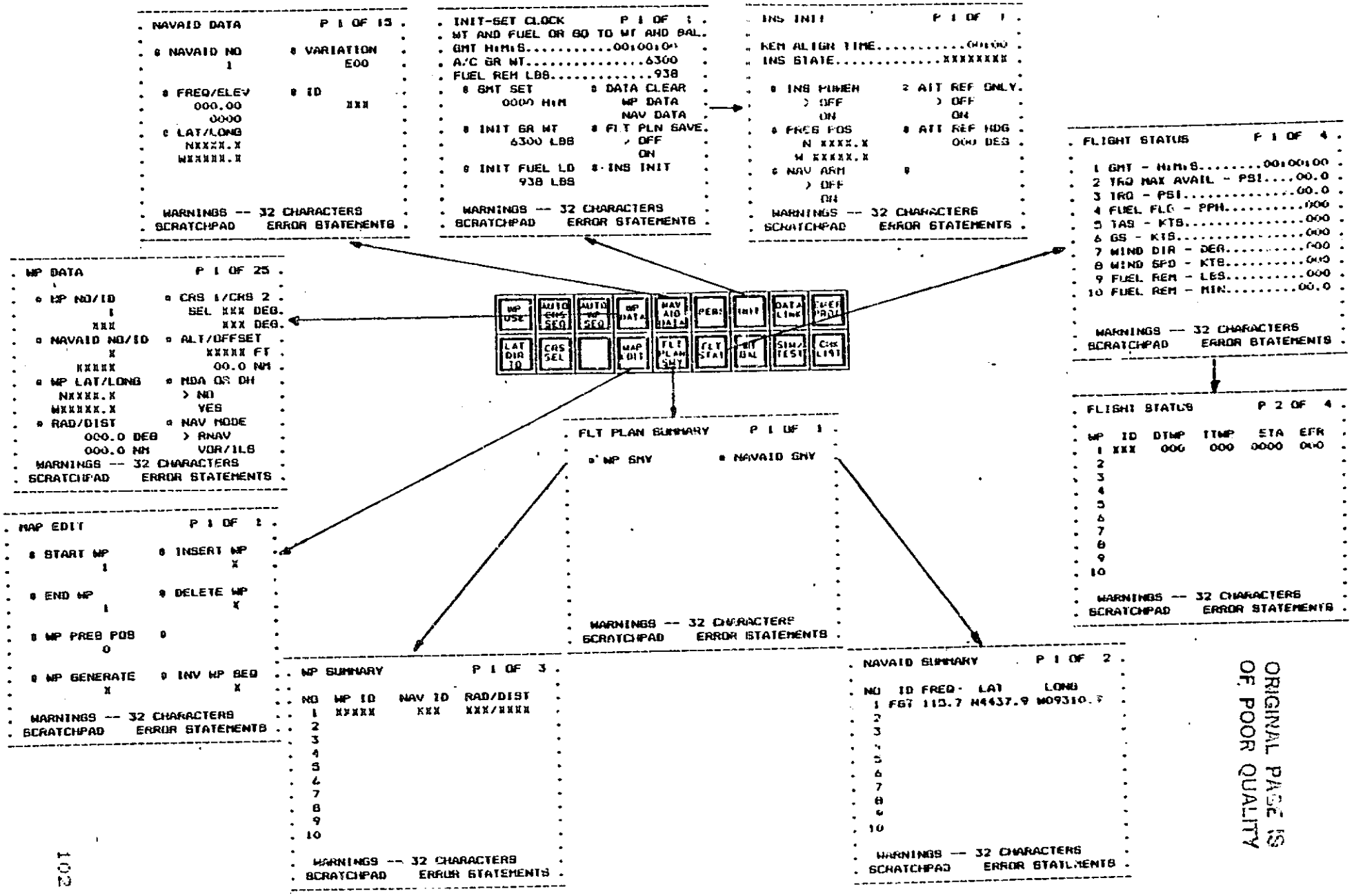

NOTE: VALUES SHOWN ARE POWER-UP VALUES

Figure 5-14: NAVIGATION/FLIGHT PLANNING FUNCTION CONTROLS AND DISPLAYS

ORIGINAL PAGE IS OF POOR QUALITY

Displayed information includes:

1) Waypoint No.
2) Waypoint ID
3) NAVAID ID
4) Radial/Distance

The WP NO will contain a number from 1 to 25 providing a numerical list of the waypoints within the system complex. The WP ID will contain up to a five letter waypoint identifier. The NAVAID ID will contain a three letter NAVAID identifier. The radial/distance column will contain the computed or entered radial and distance for the waypoint.

When the "NAVAID SMY" is activated, page 1 of 2 NAVAID summary pages is displayed. Page two may be displayed by toggling the page Fwd/Back control.

Displayed information includes:

1) NAVAID NO
2) NAVAID ID
3) Frequency
4) Latitude/Longitude

The NAVAID NO will contain a number from 1 to 15 indicating the numerical sequence of the navaid within the system complex. The NAVAID ID will contain a three NAVAID letter identifier. The entered NAVAID frequency and its latitude and longitude will be presented in the remaining columns.

Xs in the ID column designate a valid NAVAID facility for which identification code has not been entered.

Xs in latitude and longitude columns designate a valid NAVAID facility for which latitude and longitude has not been entered. Waypoints referenced to such NAVAIDS will not link.

WP DATA PAGE - The WP DATA page comes up with the active waypoint. Upon initialization waypoint 1 is the active waypoint. Another waypoint is made the active waypoint by displaying the desired waypoint on the WP DATA page and depressing the CDU "WP USE" button. Changes to the active waypoint will be immediately reflected in the displayed map, and affect the guidance signals sent to the Autopilot/Flight Director function.

Waypoints are defined from this page. If a NAVAID number is entered for a NAVAID with stored data, the NAVAID ID will be transferred to the WP DATA page.

Entry of a new NAVAID number will cause a new NAVAID ID to appear. The radial and distance are cleared to zero. New courses are computed based on this and other waypoint information. If new radial and distance are now entered, a appropriate new courses are computed when entry arrows are cleared.

Entry of a NAVAID number or a waypoint latitude and longitude will cause appropriate new courses to be generated, as well as a new radial and distance.

If a new NAVAID number or a new NAVAID ID is entered following the entry of a NAVAID number, the related data of the new number or ID will be entered.

If the NAVAID number or the NAVAID ID entry is attempted on the WP DATA page but no data is stored for this NAVAID, the current information will remain unchanged. An error message "NO NAVAID DATA" is displayed.

Upon first selection of a particular WP DATA page, the MDA or DH toggle index and the NAV mode shall indicate "NO" and "RNAV" for touchpoints 7 and 8, respectively.

With AUTO CRS SEQ off, passing over a waypoint does nothing to the course selected. If coupled, control continues to the same outbound from the station unless the course selection is changed. If the course selection is changed, the Autopilot/Flight Director reverts to Heading Hold and Nav Arm. If the course selection was made prior to or during the time the Nav Capture flag becomes true, the new course will be captured automatically.

Waypoint data can be stored in the EEPROM memory for future use by using the FLT PLN SAVE touchpoint on the INIT page. This data base is then automatically reloaded into the appropriate RAM at power up. Subsequent changes to the waypoints will not affect the stored information unless FLT PLN SAVE is re-initiated.

The waypoint data can be cleared by means of the DATA CLEAR touchpoint on the INIT page.

The SEL annunciation displayed under CRS1/CRS2 is controlled manually by the CRS SEL button. Pushing this button will toggle the SEL between CRS1 and CRS2. With AUTO CRS SEQ on, this transition from CRS1 to CRS2 will be accomplished automatically. The course selected for the active waypoint will also be displayed on the HSD.

All waypoints that are inactive will show the SEL opposite course 1. Only the active waypoint SEL is toggled by the course select pushbutton.

A waypoint is linked if:

The waypoint and the previous waypoint are located, ie, a latitude and longitude have been defined using either INS latitude/longitude or NAVAIDS for which the latitude and longitude have been entered.

Course 1 has not been manually entered for this waypoint and course 2 was not manually entered for the prior waypoint.

If data is changed for the NAVAID number to which the waypoint is referenced, the NAVAID number on the waypoint data page will go back to an X, and a data entry advisory NAV USED IN WP DEF is displayed.

If a previously linked waypoint is unlinked from either of its neighbors by the manual entry of course 2 on the previous waypoint, the courses on the waypoint data page will remain unchanged.

All courses associated with the active waypoint will be displayed on the HSD unless they are XXXs.

If latitude and longitude are not defined on the NAVAID DATA page and this NAVAIDS is used to define a waypoint, the data will properly transfer to the WP DATA page, but linking of the waypoint to another is not allowed.

ALT/OFFSET - Defines the waypoint altitude and the vertical waypoint position offset. The offset is negative for a vertical waypoint before an RNAV waypoint or positive if beyond. The entered altitude is the reference for VNAV and is the MDA or DH reference altitude if so designated by the lower right touchpoint.

FLT STAT PAGE - Data on these pages represents current conditions as measured or computed. Page 1 presents current aircraft status while pages 2 thru 4 present information for the active waypoint and all waypoints linked to the active waypoint.

Page 1 presents the following:

GMT - Current GMT clock time in Hours: Minutes: Seconds.

TRQ MAX AVAIL - The maximum torque available (PSI) for continuous operation under the current conditions.

TRQ - The current torque (PSI) imposed upon the engine output shaft.

FUEL FLO - The current fuel flow in pounds per hour.

TAS - The current true airspeed (KNOTS) received from the true airspeed sensor.

GS - The current computed ground speed (KNOTS) based on navigation and winds aloft computations.

WIND DIR - The computed winds aloft direction (DEG)

WIND SPD - The computed winds aloft velocity. (KNOTS)

FUEL REM - The current fuel remaining (LBS) based on initial fuel load and fuel flow.

FUEL REM - The current time remaining (MIN) based on current fuel remaining divided by the current fuel flow.

Pages 2 through 4 present the following information:

WP - Waypoint numbers.

ID - A three letter waypoint identifier will be presented here, if it has been so specified.

DTWP - The distance to waypoint based on WP DATA position entries is presented under this column.

If off course, the distance to the active waypoint is the straight line distance to the active WP if course 1 is selected, and the straight line distance to the next waypoint if course 2 is selected.

TTWP - The time, based on known distances and computed ground speed is presented under this column.

ETA - The estimated time of arrival, based upon the time to the waypoint and referenced to the GMT clock, is presented in this column.

EFR - The estimated fuel remaining, based on fuel load, current fuel flow and estimated time to destination, is presented in this column.

MAP EDIT PAGE - This page may be used when it is desired to alter a previous flight plan or to generate waypoints along a prescribed course.

When "WP INSERT" is activated:

The waypoint as indicated by the number entered under INSERT WP and all subsequent waypoints are renumbered.

WP DATA is then selected automatically for the new waypoint number to allow insertion of new waypoint data.

When" WP DELETE" is activated:

The waypoint, as indicated by the number entered under delete WP, is deleted and all subsequent waypoints are renumbered.

WP DATA page is then selected automatically for the waypoint number that was deleted.

When "WP GENERATE" is activated:

Waypoints will be generated to sequentially fill the set defined by the "START WP" and "END WP". Both start and end waypoints must be referenced.

The waypoints generated will be equally spaced on a course line drawn from the "START WP" to the "END WP".

Each generated waypoint will be referenced to the closest NAVAID shown on the "NAVAID SUMMARY" page.

When WP PRES POS is touched, an entry arrow will appear opposite the "x" beneath the touchpoint. Upon entry of a number to designate the desired waypoint identification, the data corresponding to the aircrafts present position will be copied onto the designated waypoint data page which will be displayed automatically. All data on the designated waypoint data page will be taken the same as that of the active waypoint except RAD, DIST, and CRS, which are computed for present position.

When "INV WP SEQ" is activated:

Waypoints will be resequenced to fill the set defined by "START WP" and "END WP". All waypoints including both start and end waypoints must exist and be referenced. All altitude and offset values, as well as MDA/DH altitudes will be returned to power up values.

Faulty entry diagnostic messages associated with map edit are as follows:

ENTRY	FAULT	CDU MESSAGE
START WP	Start waypoint not defined	WP NOT LOCATED
END WP	Designated end waypoint number less than start waypoint number	WP LESS THAN START
END WP	End waypoint not defined	WP NOT LOCATED
INSERT WP	Inserted waypoint is 26th or higher waypoint	WP STORAGE LIMIT
DELETE WP	Deleting active WP	ACTIVE WP

For the occurance of the diagnostic messages listed above, the data will not be accepted into the system and the messages must be cleared via the CLR key.

INIT PAGE - Navigation/flight planning stored data can be cleared using touchpoints on the INIT page. Stored NAVAID and waypoint data can be cleared separately.

Touching the DATA CLEAR touchpoint causes an entry arrow to appear. Subsequent touchpoint touches will toggle the arrow between the two types of data. To clear either type of data from the system, the CLR button is depressed with a clear scratch pad. Selecting another touchpoint will cause the arrow to advance without clearing the data from the system.

INS INIT PAGE -Touching the INS INIT touchpoint causes the INS INIT menu page to be displayed. The touchpoints and their functions are tabulated below:

INS POWER OFF/ON - Turns to INS system on, initiates self-test and alignment process. The alignment time varies from 2 1/2 to 7 minutes depending upon measured alignment performance parameters. If the previous flight used a full inertial alignment and the aircraft has not been moved, stored heading and present position information can be used to reduce alignment time to 2 1/2 minutes. During alignment, the aircraft must be stationary. The remaining alignment time is displayed at the top of INS INIT page.

PRES POS - Aircraft present position must be entered prior to the system entering navigation mode. This touchpoint provides entry capability to accomplish this requirement. If the system attempts to enter the Navigate mode without a "present position" entry, a NO PRESENT POSITION caution message will occur as a reminder to the pilot.

NAVIGATE OFF/ON - This touchpoint provides selection of the INS navigate mode. This touchpint may be selected immediately after system power has been turned on to provide automatic navigate mode engagement. However, entry into navigate mode will be inhibited until a "present position" has been entered under the PRES POS touchpoint.

ATT REF ONLY - The attitude mode selection touchpoint is used only during specific fault conditions that allow valid attitude outputs (pitch, roll and heading) but position and/or velocity outputs are invalid. In this mode, all navigation outputs are invalid but attitudes are still provided. Heading outputs are relative to aircraft heading at "ATTITUDE" mode engagement which is initially set to zero degrees. The actual magnetic heading at mode engagement can be entered using the ATT REF HDG touchpoint.

NOTE: The Navigate mode cannot be re-entered once Attitude mode is selected. Also, no further correction for magnetic variation is provided since latitudes and longitudes are no longer computed.

ATT REF HDG - The ATT REF HDG touchpoint provides magnetic heading entry capability to be used during specific fault conditions or manual selection of attitude reference only engagement.

The following INS status information is displayed on the INS INIT page:

REM ALIGN TIME - Time remaining in alignment process. The alignment time varies from 2 1/2 to 7 minutes.

INS STATE - ALN - Indicates INS system is in the align state.

NRDY - Not ready - Navigate ready conditions have not been satisified, but alignment process has been completed.

NAV - Navigate Mode Engaged

ATT - Attitude Mode Engaged.

5.2.1.2. NAVIGATION/FLIGHT PLANNING CDU

Navigation/flight planning function controls located on the CDU (see Figure 5-15) are as follows:

WP USE - USE will activate the waypoint displayed on the CDU. If the WP DATA page is not on the CDU, nothing will happen when the USE button is pushed. The USE button is only used for selecting active waypoints. . If the displayed waypoint data is incomplete, a CDU data entry "WP NOT DEFINED" is displayed.

CRS SEL - CRS SEL will toggle the WP DATA page CRS 1/CRS 2 touchpoint SEL mnemonic between CRS 1 and CRS 2 for the active waypoint. The HSD display will change to show the new course and course deviation relative to the newly selected course. If AUTO CRS SEQ has been selected, the CRS SEL button will change the selected course and cause the system to revert to manual sequence (AUTO CRS SEQ OFF). If the selected course is not defined, the message "COURSE NOT DEFINED" is displayed.

AUTO CRS SEQ - The AUTO CRS SEQ (Auto Course Sequence) button is pushed to toggle between the ON and OFF states for auto course sequence. AUTO CRS SEQ ON will cause RODAAS to transition automatically from the "in" course (course 1) to the "out" course (course 2). The autopilot/flight director control laws are such that a smooth asymptotic capture is executed for course intersection angles less than 90 degrees. The AUTO CRS SEQ ON state is indicated by lighting the pushbutton and attaching an A to the course number on the HSD. Activation of the autocourse sequence (or activation of WP USE with auto-course-sequence on) with no course 2 defined for the active WP will result in an CDU data entry advisory "CRS 2 NOT DEFINED".

AUTO WP SEQ - The AUTO WP SEQ (or Auto Waypoint Sequence) button is pushed to toggle between the ON and OFF states for auto waypoint sequence. AUTO WP SEQ will cause RODAAS to transition automatically from the "outbound" course (course 2) on the current waypoint to the "Inbound" course (course 1) of the next waypoint, making it the active waypoint at the halfway point and upon next WP availability. The AUTO WP SEQ on state is indicated by lighting the pushbutton and attaching an A to the WP number on the HSD.

Activation of the AUTO WP SEQuence (or activation of the WP use with auto-waypoint-sequence on) with the next waypoint undefined will result in a CDU data entry advisory "WP NOT DEFINED".

LAT DIR TO - LAT DIR TO will set course 1 to the course which would direct the aircraft to the active waypoint and makes course 1 the selected course.

Figure 5-15: NAVIGATION/FLIGHT PLANNING CDU CONTROLS

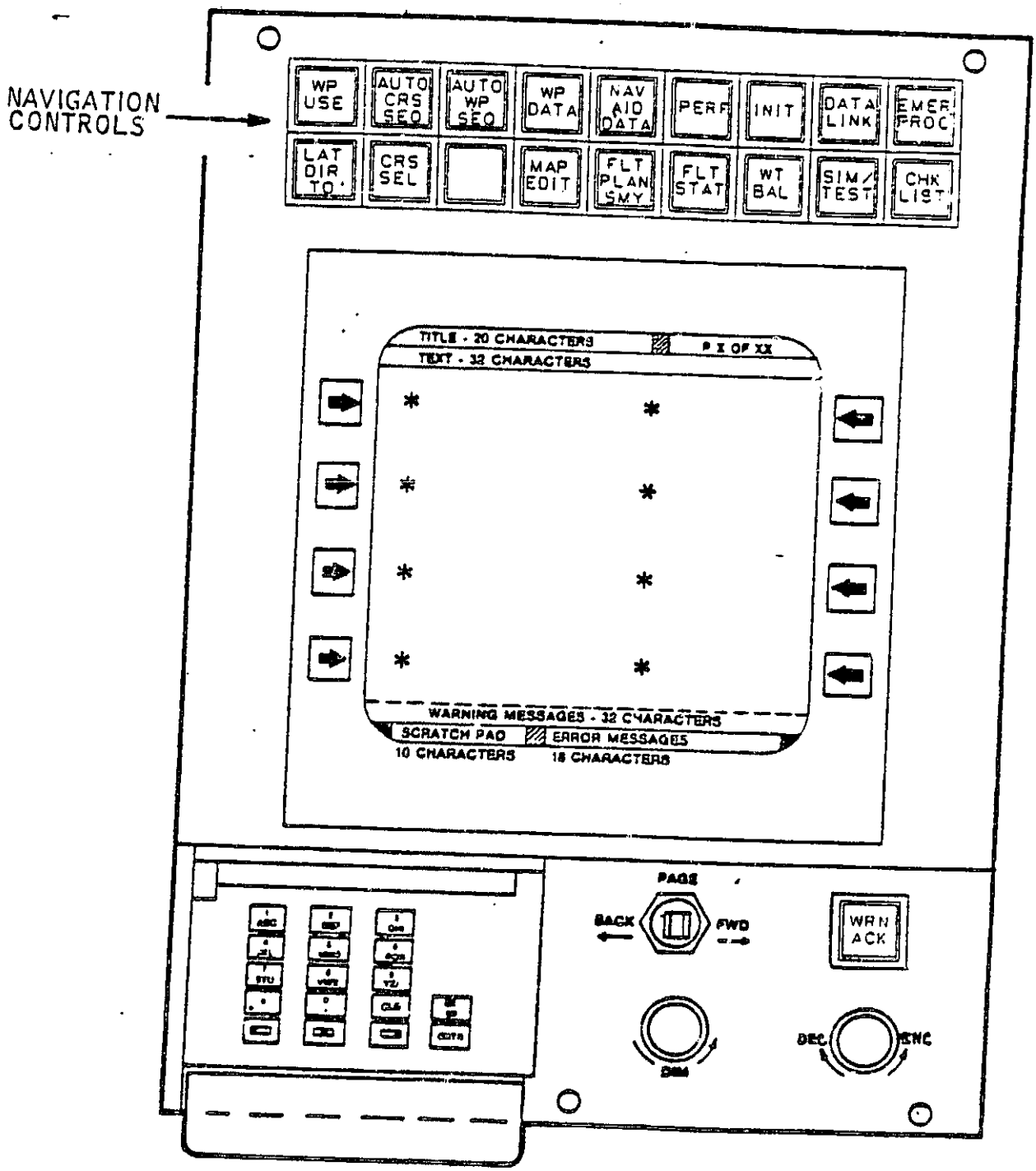

ORIGINAL PAGE IS
OF POOR QUALITY

Activation of LAT DIR TO when the active waypoint is an ILS waypoint results in the CDU data entry advisory "LOC FREQ SELECTED". LAT DIR TO with an incomplete active waypoint results in the CDU data entry advisory "WP NOT DEFINED". LAT DIR TO in VOR changes CRS 1 to the current bearing to the station.

5.2.1.3. NAVIGATION/FLIGHT PLANNING HSD CONTROLS AND DISPLAYS

HSD displays associated with Navigation/Flight Planning are shown in Figure 5-16. HSD controls associated with navigation/flight planning are shown in Figure 4-7. They include the following functions:

HDG/NOR - HDG/NOR changes the map from heading up to a North-up orientation and vice versa. Lighted annunciation.

MAP/CRSR - MAP/CRSR changes the slew control to affect either the cursor or the map. If the cursor is the selected state, a cursor appears superimposed on the active waypoint. Cursor mode operation is defined below. Lighted annunciation.

MAP RETURN - MAP RETURN returns the map to the normal position (not slewed/map mode).

WP BRG - WP BRG causes the active waypoint bearing needle to be deleted from the display if present or to be displayed if not present. Lighted annunciation.

MAP REVU - MAP REVU causes the map to appear when no radio or INS signals are available. The active waypoint is located at the airplane location. The purpose is to allow preflight review of the planned flight using the map slew feature. The aircraft symbol is not shown in MAP REVU mode.

MAP SCALE - Changes in the map scale are initiated by engaging one of the three following map scale buttons.

- 2 NM/inch map scale select: Lighted annunciation, HSD annunciation
- 8 NM/inch map scale select: Lighted annunciation, HSD annunciation
- 40 NM/inch map scale select: Lighted annunciation, HSD annunciation

The 2-NM/inch scale is suitable for tight control situations such as approach, and the 8-NM/inch is suitable for enroute. The 40-NM/inch allows for display of approximately 100 NM forward of the HSD aircraft symbol.

Lateral deviation is presented by five dots on either side of the aircraft symbol. The dots are 0.125 inch apart. The 2 NM/inch map scale results in 0.25 NM/DOT, 8 NM/inch results in 1.0 NM/DOT, and 40 NM/inch results in 5 NM/DOT scaling.

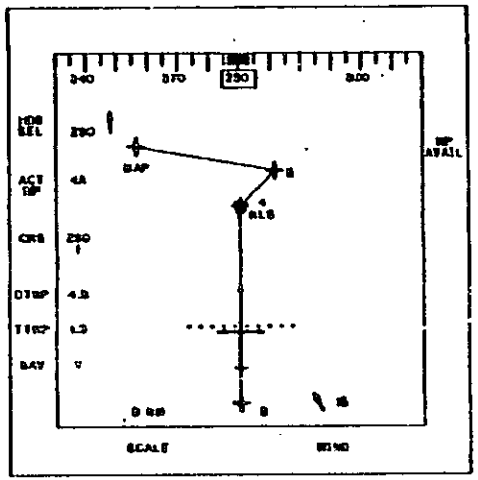

RNAV MODE, 8NM/INCH SCALE
AUTO WP SEQUENCE ON

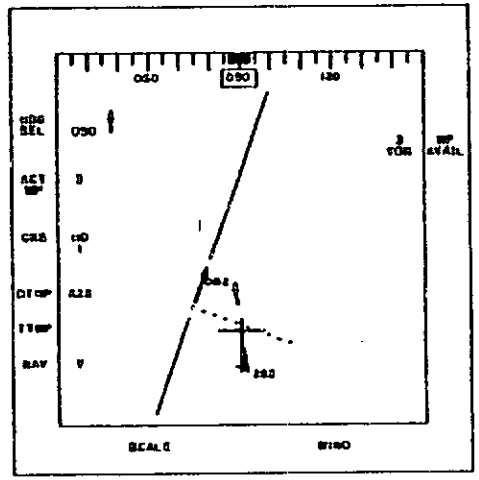

VOR MODE, 2 DEG/DOT SCALE
INS OFF

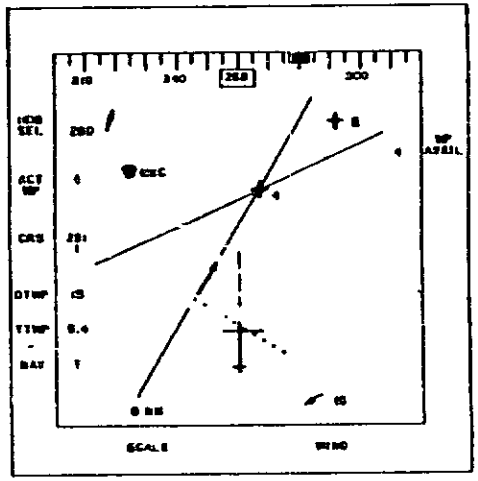

RNAV MODE, UNLINKED WAYPOINT
8 NM/INCH SCALE

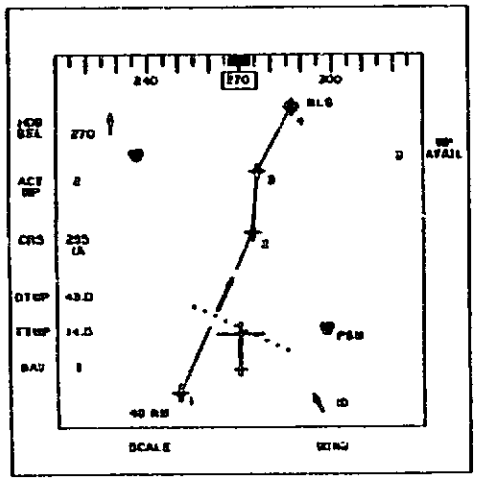

RNAV MODE, 40 NM/INCH SCALE
AUTO SEQUENCE MODE ON

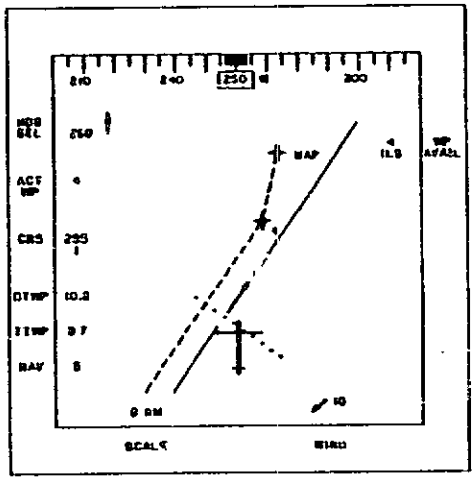

ILS MODE, 8 NM/INCH SCALE

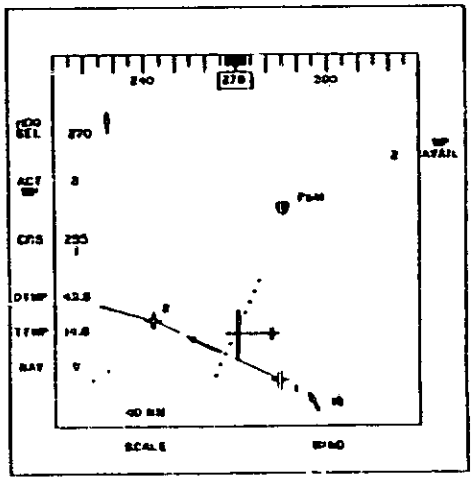

RNAV MODE, NORTH UP ORIENTATION
40 NM/INCH SCALE

Figure 5-16: NAVIGATION/FLIGHT PLANNING HSD DISPLAY FORMATS

The VOR scale is 2 degrees/dot deviation is limited to 5 dots.

Examples of HSD map displays set up using these controls are illustrated in Figure 5-16. Included are:

RNAV MODE, 2 NM/INCH AND 8 NM/INCH - These scales are best suited for operations in a terminal control area (TCA) or in performing an RNAV approach. In this illustration the aircraft is approaching WP4 NLS, a VORTAC which is providing the signals for defining WP5 and 6. The flight plan is for an RNAV approach to Nelson Airport, Kansas. WP5 is the initial approach fix (IAF) and WP6 is the missed approach point (MAP). The auto WP SEQ mode is on providing automatic waypoint switching should a missed approach be executed.

RNAV MODE, 40 NM/INCH - This scale is most suitable for viewing the flight plan. The illustration shows the aircraft enroute to Nelson VORTAC. At this moment the aircraft is 6 miles to the right of the selected course.

VOR MODE, 2.0 DEG/DOT - This mode, since no distance is available, cannot show a map. The aircraft is far to the right of the selected course. The distance to the VORTAC will be displayed adjacent to the DTWP if the VOR being used has DME available.

ILS MODE - This mode is similar to an RNAV type presentation with the INS active. The lateral deviation is computed based on localizer deviation. The aircraft is seen 2.0 dots to the right of the localizer course. Maximum localizer deviation is limited to 5 dots. TTWP and DTWP are based on distance information from a colocated DME facility or upon INS data.

RNAV MODE, UNLINKED WAYPOINT, 8 NM/INCH - This figure shows an unlinked RNAV display. Waypoint 4 is the active waypoint. The two courses entered for the waypoint are shown as course lines extending through the waypoint. Course 1 (291 degrees) has been selected as indicated by the CRS entries at the left of the display, and the course direction arrow.

Waypoint 5 is also shown on the map. If the active WP NAVAID is located (i.e., has latitude and longitude defined), then all other located waypoints and NAVAIDs will be drawn. In this case, waypoints 4 and 5 must both be referenced to located NAVAIDs such as MKC as shown on the map.

RNAV MODE, NORTH UP ORIENTATION - This figure shows the same RNAV, 40 NM/inch situation as it would appear with a north up orientation. The airplane occupies the same location as for the heading up orientation and the map moves with respect to the airplane as the flight progresses. The airplane will rotate as the heading is changed. If desired, the map slew feature may be used to reposition the airplane (and map) to a more desirable position.

The HSD will only show NAVAID identifiers entered by the pilot. Where a waypoint identifier has been entered, this information will also be displayed, in lieu of a waypoint number.

CURSOR CONTROL - The pilot calls up the WP DATA page on the CDU and selects the waypoint number he wants to assign to the cursor waypoint. If he wants to insert, he calls up the MAP EDIT page.

The pilot then pushes the CURSOR button on the HSD Control Panel and the following things happen:

The cursor appears on the HSD superimposed on the active waypoint.

The cursor can be moved using the slew control. After the cursor is moved to the desired location, pushing the ENTR button will cause the active waypoint data modified for the cursor radial and distance information to be copied on the displayed waypoint data page. New courses are computed and appear on the WP DATA page if the waypoints are linked. The waypoint can then be made active by touching WP USE.

If the cursor designated waypoint is the active waypoint, the same map slew feature is provided which allows one to view portions of the moving map which are otherwise out of view as a result of map scale.

The cursor moved or inserted waypoints must be referenced to the active waypoint reference.

Depressing a touchpoint or any CDU key other than MSG ACK, CLR or DATA LINK will cause the cursor mode to be disengaged. The entering of both radial and distance or latitude and longitude of the cursor designated waypoint (by pushing the ENTR button) will cause the cursor to disappear.

MAP SLEW CONTROL - Map slew is accomplished using the slew controller. Slew range limits are 33 degrees of latitude and longitude or 999 miles. Slew rates are ± 0.2 inches/second or ± 1.0 inch/second depending on slew controller displacement. The map can be recentered using the MAP RTN control.

5.2.2. NAVIGATION/FLIGHT PLANNING ALGORITHMS

KALMAN FILTER MECHANIZATION - The RODAAS navigation/flight planning function employs a Kalman filter to determine aircraft position. The filter blends inertial aircraft position with TACAN/VOR/DME radio data which has been corrected by dead-reckoning true airspeed and heading information.

This implementation allows all available signals to be used in determining aircraft position and provides a method of estimating mean winds and can provide position estimates better than VOR/DME, TACAN, INS or dead-reckoning alone. This improvement depends upon how the error sources are modeled and in particular, their frequency content.

Aircraft-to-station geometry enters the measurment equation. This is true whether one works in a Rho-Theta coordinate frame or an X-Y coordinate frame. In the RODAAS design a steady state solution was obtained for a variety of aircraft-station geometries. The Kalman filter gains were then plotted as functions of Rho and Theta. Plots of these gains were used to schedule the gains with range and bearing to the station. This approach reduced the on-board computations required without sacrificing performance.

The resulting filter is depicted in Figure 5-19. Filter gains are tabulated in Table 5-6.

The blending function of this Kalman filter is apparent if one examines the continuous version of the filter at 0 degrees bearing. The X and Y estimates decouple and each has the form of Figure 5-17.

In Figure 5-17, Wxhat is the wind state and Xxhat the position estimate. The transfer function for Xxhat is:

$$\hat{X}_x = \left[\frac{S+\epsilon}{S^2 + (\epsilon + K_1) S + K_2 + \epsilon K_1} \right] \hat{U}_x + \left[\frac{K_1 (S+\epsilon) + K_2}{S^2 + (\epsilon + K_1) S + K_2 + \epsilon K_1} \right] \hat{Y}_x$$

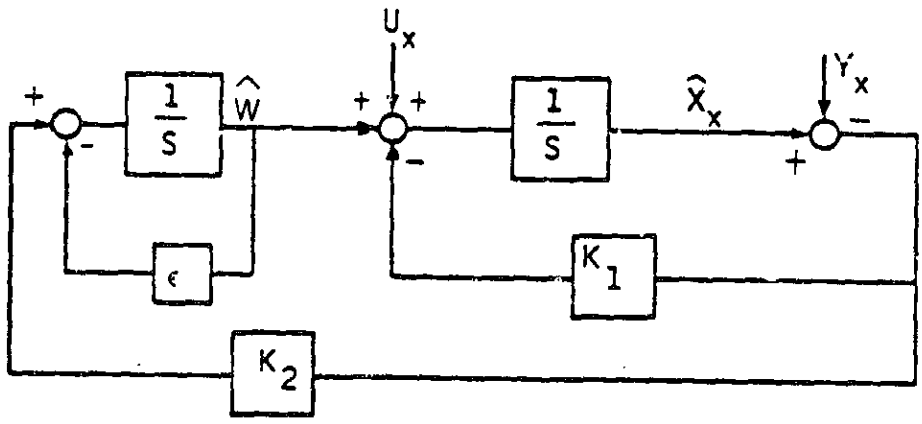

$\epsilon = 0$, IF THE WIND IS ASSUMED CONSTANT

Figure 5-17: KALMAN FILTER, SIMPLIFIED FORM

Thus Xxhat is high-passed Uhat (dead-reckoning via air data) and low-passed Yxhat (position from VOR/DME). Typical values for the gains are:

	R = 5 NM	R = 50 NM
X axis	K1 = 0.28	K1 = 0.28
	K2 = 0.031	K2 = 0.031
Y axis	K1 = 0.22	K1 = 0.07
	K2 = 0.02	K2 = 0.0023

Thus for the X axis, the second order filter has $\omega = 0.18$ and $\zeta = 0.77$ in the denominator. Note its dynamics don't change with range since delta x errors are due to R (DME errors). For the Y axis, a similar filter is obtained. However, as R increases, the filter bandwidth decreases. This is expected since delta y errors are R delta theta. Thus, as the Y measurment becomes less accurate with range, the filter reduces the bandwidth.

Finally, the scheduled gains developed account for all coupling and geometry and are directly computed.

The relative position estimates of the Kalman filter (Xhat,Yhat) are blended with station latitude/longitude to generate a corrected aircraft latitude and longitude.

The relative ground speeds determined by the Kalman filter and the LINS system could also be blended. Further study (as to signal frequency and error content) is needed, however, to determine the feasibility of blending these two signals to form a more accurate result. One such possibility is shown in Figure 5-18.

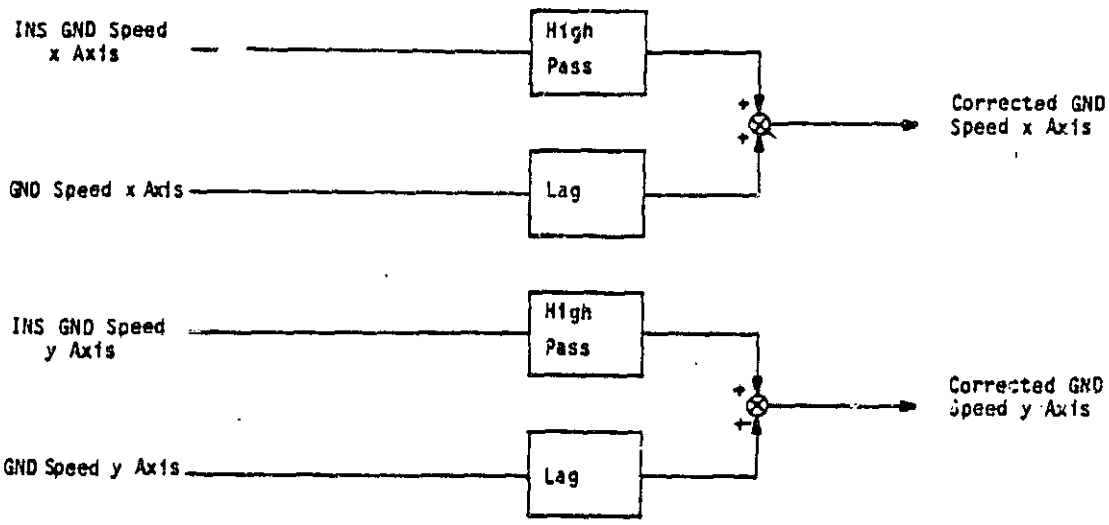

Figure 5-18: GROUND SPEED FILTERING (PROPOSED)

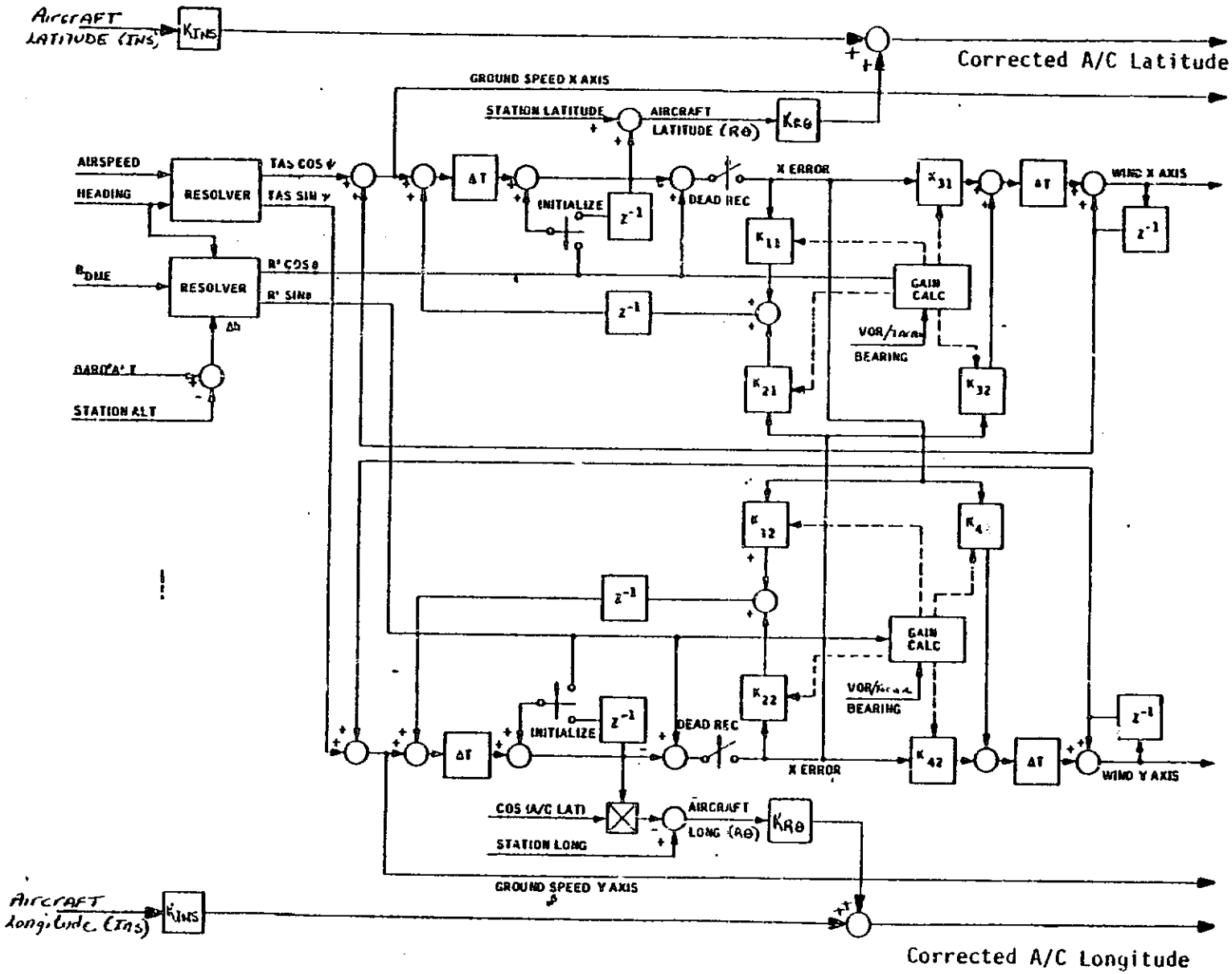

Figure 5-19: NAVIGATION KALMAN FILTER MECHANIZATION

Table 5-6: NAVIGATION KALMAN FILTER GAINS

Natural Frequency (sec) of X Filter to X Error

$$\omega_{xx} = .2 + \left[\left(\frac{.8}{R + 5}\right) - .17\right] \sin^2\theta$$

Natural Frequency (sec) of Y Filter to Y Error

$$\omega_{yy} = .2 + \left[\left(\frac{.8}{R + 5}\right) - .17\right] \cos^2\theta$$

Where: R = Measured range corrected for altitude in NMI

θ = Measured bearing to station in Deg.

X = Distance in NMI WRT NORTH

Y = Distance in NMI WRT EAST

ζ = Damping of 2nd order filter = .7

Filter Gains

$k_{11} \approx 2\zeta\omega_{xx} = 1.4\ \omega_{xx}$

$k_{22} = 2\zeta\omega_{yy} \approx 1.4\ \omega_{yy}$

$k_{31} = \omega_{xx}^2$

$k_{42} = \omega_{yy}^2$

$k_{21} = 2\zeta\ (.07\sin 2\theta).1\sin 2\theta$

$k_{21} = k_{21} = .1\sin 2\theta$

$k_{32} = (.07\sin 2\theta)^2 \sin 2\theta$
$= |(.07\sin 2\theta)|\ x\ (.07\sin 2\theta)$

$k_{41} = k_{32} = |(.07\sin 2\theta)|\ x\ (.07\sin 2\theta)$

MAP COMPUTATIONS - The HSD map is drawn to look like the aircraft navigation maps: i.e., Lambert conical projection maps. On such a map, great circles are drawn as approximate straight lines. This means that the lines of longitude will be straight, but not parallel and that the lines of latitude will be curved.

The mathematics of the conical projection are too complex to be used when drawing the RODAAS HSD map. Instead, a plane projection is used with the projected distance between the map basis (the airplane or the active waypoint) and the point to be mapped being the true great circle distance. See Figure 5-20. This projection is very close to that of the aircraft navigation maps, and for distances less than 200 miles, the relative error is less than 0.05

Even though the mathematics of great circle distance and course computation are too complex to be used when drawing the HSD map, with the help of some approximations, the circle formulas can be reduced to manageable expressions for computing the coordinates on the HSD map. The approximate map coordinate computaion equations are:

$$Xp = (Lp - Lm)$$
$$Yp = (\lambda m - \lambda p) * \cos Lp$$

Where Lp and p are the lat-long of an arbitrary point P and Lm, λm are the lat-long of the map basis (a/c or active waypoint), and Xp, Yp are the rectangular coordinates of the point P on the HSD map. The result of this approximation on the map is like making the curved lines of latitude into straight lines. See Figure 5-21. In the 40 nm/inch scale, the display is 180 X 180 nm and the worst case relative error in distance across the HSD map is about 1% and the relative error in radial is about 1.5%.

MAP SLEW - The map slew function gives the pilot the possibility to move the map relative to the display screen or as it also could be understood, move the display screen window over the map. Independent of the map slew, the map is rotated and scaled relative to the map basis which, except in map review, is the aircraft. After the map computations, the slews are added as display offsets.

The advantage of this mechanization is that the aircraft does not move off the map when it is turning, which could happen if the the center of the display was used as the point around which the map rotated.

There are, however, some disadvantages. If we use the map slew to slew off to a relative distant point, we cannot use the map scales to blow up that area, since the expansion is done around the map basis (i.e. the aircraft). The map projection described earlier also produces the effect that if we slew off some distance, then the compass directions will change relative to the display.

Figure 5-20: PLANE PROJECTION

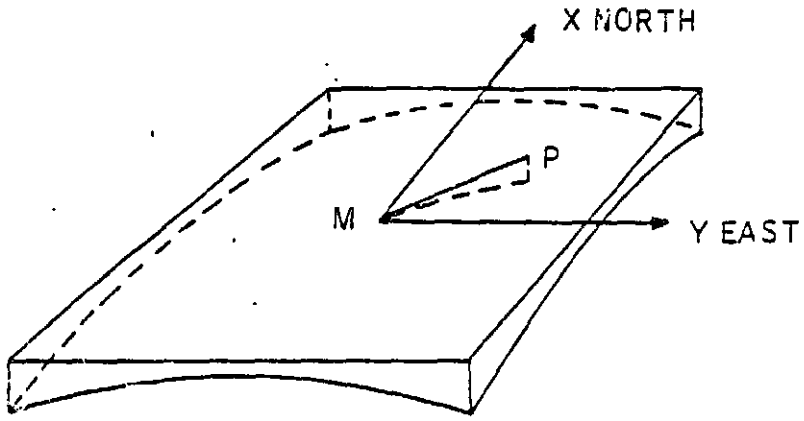

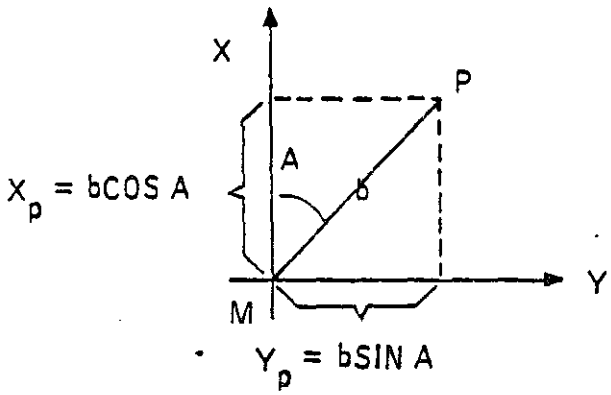

b = GREAT CIRCLE DISTANCE BETWEEN M (MAP BASIS) AND P (POINT)

A = INITIAL COURSE FROM M TO P

X_p = bCOS A = PLANE PROJECTION DISTANCE IN X DIRECTION BETWEEN M AND P

Y_p = bSIN A = PLANE PROJECTION DISTANCE IN Y DIRECTION BETWEEN M AND P

These disadvantages can be avaoided by using map review and north up modes, and as long as the slew offsets are short, the slew will be more useful for positioning the aircraft sysmbol and related information on the display.

The mapping of an arbitrary point P on the HSD display is computed as follows (see Figure 5-21).

1. Projected distances relative to the aircraft:

$$Xp = (Lp - Lac)$$

$$Yp = (\lambda ac - \lambda p) * \cos Lp$$

2. Rotation with respect to aircraft heading if in heading up mode:

$$Xrp = Xp * \cos\Psi + Yp * \sin\Psi$$

$$Yrp = - Xp * \sin\Psi + Yp * \cos\Psi$$

3. Addition of slew offsets and conversion to display coordinates:

$$Xdisp = - (Xrp - Xslew)$$

$$Ydisp = (Yrp - Yslew)$$

The map slew offsets come from integration of constants:

$$Xslew = \int_0^t gx\,dt$$

$$Yslew = \int_0^t gy\,dt$$

where gx, gy = 0, ± 0.2, ± 1 inch/sec depending on the position of the slew switch. gx, gy are forced to zero when not in map mode and the integrations are reset to zero if MAP RTN button is depressed or if change of map basis is done. Change of map basis is done by entering map review mode or changing active waypoint in map review mode.

MAP REVIEW IMPLEMENTATION - Map review is entered if the MAP REVU button is depressed while the HSD is in normal mode. In map review mode the map basis is the active waypoint instead of the aircraft, and at zero map slew, the map basis is centered on the display instead of slightly below the center of the display. The aircraft symbol is not shown in the MAP REVU mode.

In heading up mode the map will be oriented as the aircraft is oriented, and the map will rotate around the active waypoint as the aircraft turns.

Figure 5-21: HSD MAP SLEW

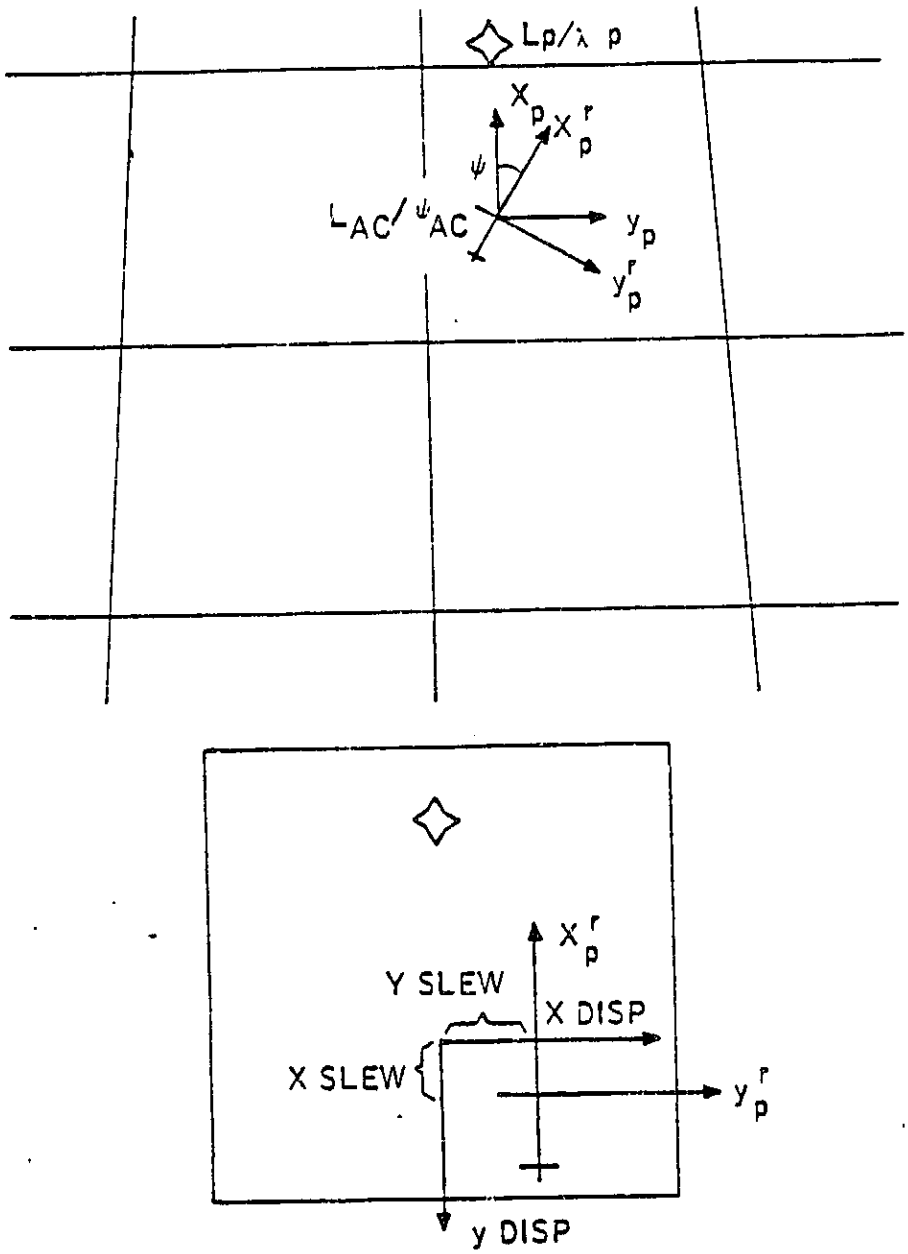

CURSOR SLEW IMPLEMENTATION - The cursor is used to move waypoints and therefore, the cursor slew has to be map oriented. That is, it has to keep its radial and distance relative to the active waypoint independent of the map modes and the map scales. The cursor position displacement components are computed in the same manner as the map slew components previously described.

LATERAL BEAM CAPTURE LOGIC - DAAS simulation studies prompted development of improved logic for capturing courses. The resulting lateral beam capture is as follows. The lateral beam capture flag becomes true when:

$$Ky\Gamma = \frac{U_1^2}{g \tan 25^\circ} \left\{ \left[\text{sign}\Gamma \right] \left[1 - \cos(\psi - \text{Crs Sel}) \right] - \left(\frac{W}{57.3} U_1 \right) \left[\psi - \text{Crs Sel} + \tan^{-1}\left(\frac{W}{U^1} \right) \right] \right\}$$

where:

Ky = lateral displacement from selected course (positive to the right of course - ft.

U1 = true airspeed - ft/sec

Crs Sel = Crs 1 or Crs 2 as appropriate - degrees

ψ = Airplane heading - degrees

W = Component of wind that is normal to selected course (positive when wind vector points to right of course) - ft/sec

When flying course 1 of an RNAV waypoint and course 2 is selected manually, the autopilot will revert to the heading hold mode until the capture flag becomes true. If the capture flag for course 2 had become true prior to manual selection of course 2, a capture turn will be initiated immediately.

When flying course 1 of an RNAV waypoint and auto sequence has been selected, the capture criterion for course 2 is examined while tracking course 1. When the capture flag becomes true, the autopilot initiates a turn to caputre course 2 and the system automatically sequences to course 2 provided the time to the waypoint is less than 60 seconds. Should the time to go be greater than 60 seconds, the capture turn and auto sequence step will be delayed until the time to the waypoint is 60 seconds.

5.2.3. NAVIGATION/FLIGHT PLANNING FUNCTION INTERFACES

Navigation/Flight Planning Function Interfaces are show in Figure 5-22. The navigation/flight planning function receives flight plan and NAVAID data from the CDU. Selected radio frequencies are sent to the radio adapter unit which tunes the selected receiver and

Figure 5-22: NAV/FLT PLANNING FUNCTION INTERFACES

ORIGINAL PAGE IS
OF POOR QUALITY

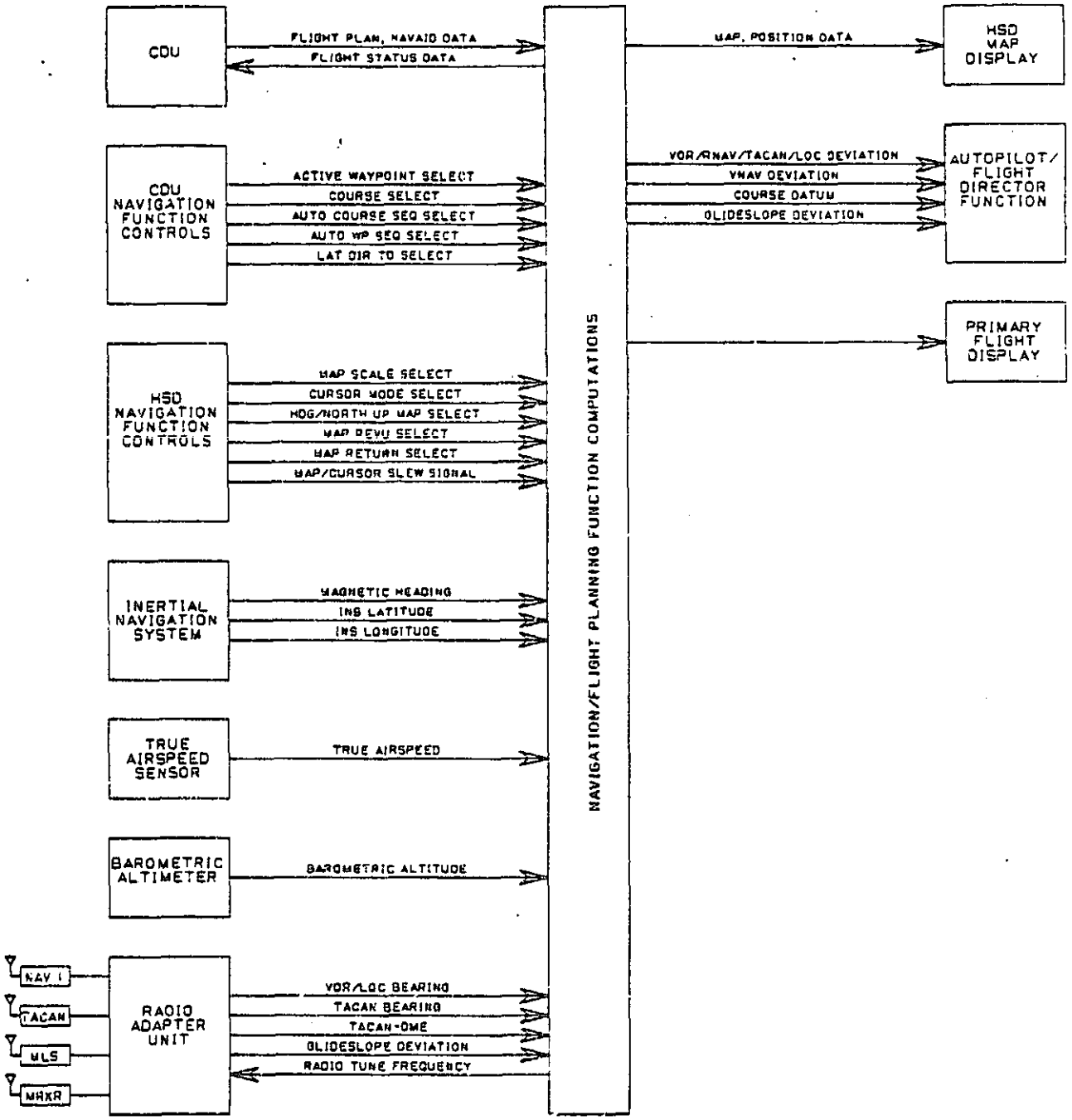

responds with extracted radio position information. Heading, INS and true airspeed information are blended with radio position data in the navigation computations. Results of the Navigation/Flight Planning computations are displayed on the HSD moving map, and deviation signals are supplied to the Autopilot/Flight Director Function for guidance.

5.3. VERTICAL NAVIGATION (VNAV) FUNCTION

The vertical navigation mode provides computed collective commands to maintain a defined vertical path. To operate in this mode, the pilot must:

1) Establish an RNAV waypoint
2) Establish course on the waypoint
3) Be on course laterally (see VNAV Mode Monitoring, Warning)
4) Set waypoint altitude on WP DATA page
5) Set along track offset from -50 to +50 NM if it is desired to reach the desired altitude before or after the waypoint, respectively

PFD and CDU displays associated with VNAV are shown in Figure 5-23. The VTA indicator on the PFD shows the track angle required to arrive at the active vertical waypoint (with due consideration to offsets) at the waypoint altitude as entered on the WP DATA page. By pushing the VNAV button, the system will become coupled to that angle provided that the aircraft is laterally on course, and vertical track angle is within $-10 < VTA < +10$ degrees.

Upon reaching the waypoint altitude, the system will revert to altitude hold.

VNAV is monitored at VNAV mode engagement to preclude inadvertent large pitch commands. The Autopilot/Flight Director VNAV mode engage and disengage criteria are defined in a later paragraph.

5.4. FLIGHT WARNING/ADVISORY FUNCTION

The RODAAS Flight Warning/Advisory Function includes the following elements:

Engine parameter monitoring, warning
Aircraft configuration monitoring, warning
Airspeed and blade stall monitoring, warning
Control authority monitoring
Altitude advisory function
Marker beacon advisory function
Autopilot/flight director monitoring, warning
BIT fault warning

Figure 5-23: VNAV DISPLAYS

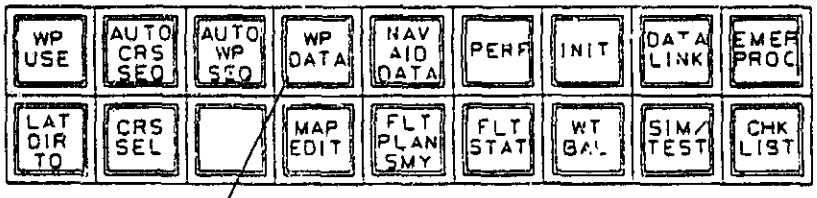


```
. WP DATA                    P 1 OF 25 .
.                                      .
.  * WP NO/ID          * CRS 1/CRS 2 .
.           1             SEL XXX DEG.
.         XXX                 XXX DEG.
.  * NAVAID NO/ID      * ALT/OFFSET  .
.           X               XXXXX FT .
.       XXXXX                00.0 NM .
.  * WP LAT/LONG       * MDA OR DH   .
.     NXXXX.X            > NO        .
.    WXXXXX.X              YES       .
.  * RAD/DIST          * NAV MODE    .
.        000.0 DEG       > RNAV      .
.        000.0 NM          VOR/ILS   .
.  WARNINGS -- 32 CHARACTERS         .
. SCRATCHPAD    ERROR STATEMENTS     .
```

VERTICAL WAYPOINT ALTITUDE, OFFSET ENTRY

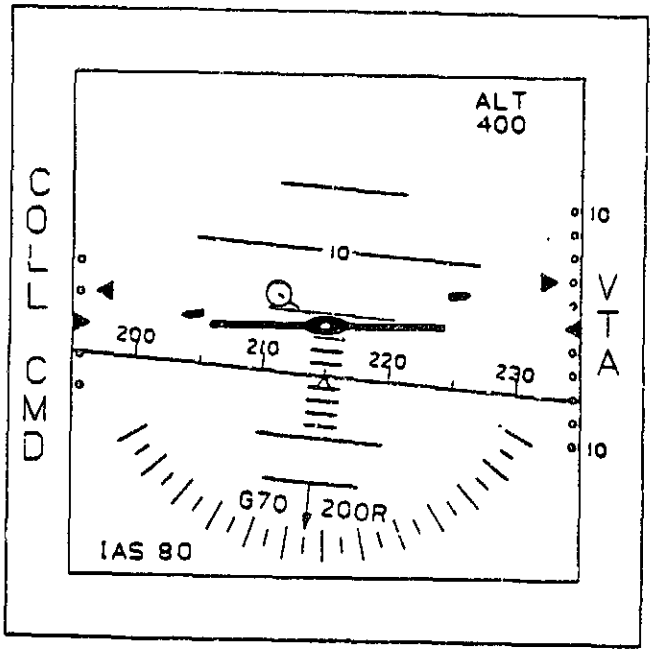

VNAV VERTICAL TRACK ANGLE DISPLAY (± 10 DEGREES)

The Flight Warning Advisory Function controls and displays are shown in Figure 5-24.

Two means of annunciation are provided to call attention to warning and advisory functions. First the PFD shows a flashing warning or caution alert. An associated text message then appears on the 32-character, second-from-bottom line of the CDU display. A pushbutton, WARN ACK, is used to acknowledge the CDU message and extinguish the flashing PFD alert. A broader form of system warning capability is provided on the autopilot mode annunciator panel. A deteriorated function level warning is presented on the

system state message area (see Figure 5-4) which provides information regarding the integrity of the RODAAS complex. These messages, Level I, II, III, once presented, are not extinguished unless the failed item(s) are corrected. General guidelines for the causes which result in Level I, II, III illumination are summarized in Table 5-8.

In general, the PFD "WARN" message is used for never-exceed airspeed warning, autopilot warnings and BIT warnings. The PFD "caution" message is used to generally annunciate caution situations. Table 5-7 summarizes the conditions that cause the "WARN" and "CAUTION" indications.

MDA or DH annunciation messages are provided on the PFD. Data link annunciations are also provided on the PFD. An aural horn is also used in association with some warnings, as well as the altitude advisory function.

Airway, outer and middle marker beacon annunciations are provided on the electronic PFD.

CDU warning and caution messages are retained until the conditions no longer exist. The retained warning or caution messages are stored according to one of the following three classifications:

Unacknowledged warning messages
Unacknowledged caution messages
Acknowledged warning or caution messages

If any unacknowledged warning messages exist, the PFD "warn" message will remain and the first received warning message will be displayed on the warning and caution message line of the CDU. If the WARN ACK button on the CDU is depressed, the displayed warning message will be transferred to an acknowledged message storage location and the next unacknowledged warning message is brought to the CDU display. If no unacknowledged warning messages exist, the PFD warning message will be extinguished and the first received unacknowledged caution message is displayed. When all messages have been acknowledged and displayed, the warning line on the CDU will be cleared.

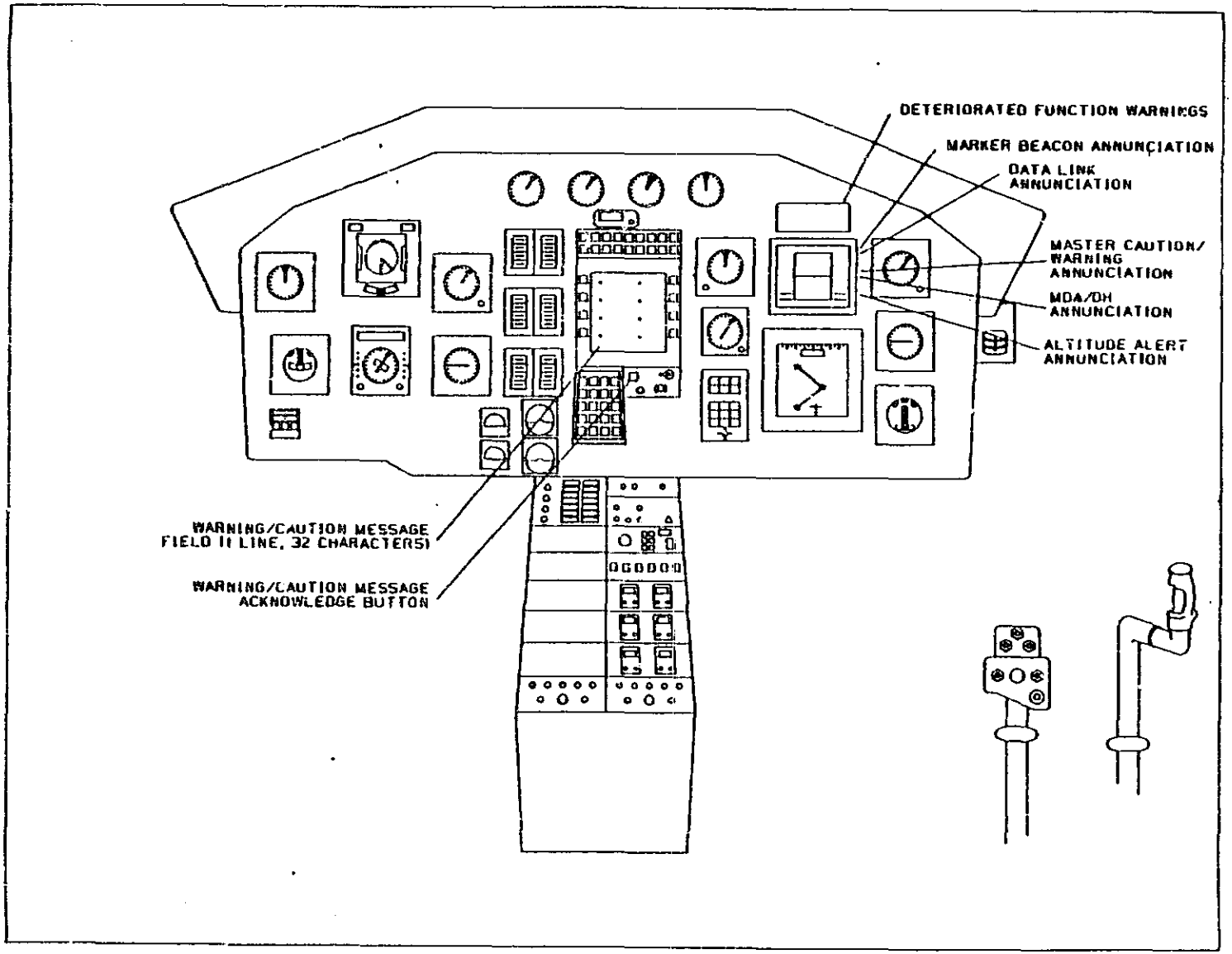

Figure 5-24: RODAAS FLIGHT CAUTION CONTROLS AND DISPLAYS

Unacknowledged caution messages are presented and acknowledged in the same way as unacknowledged warnings. Caution messages are second in priority to unacknowledged warning messages. The PFD caution message is extinguished whenever all caution messages are acknowledged.

Acknowledged warning or caution messages are stored in a stack until such time as the causitive conditions cease to exist. If all warning and caution messages are acknowledged, both PFD "warn" and "caution" messages are extinguished.

Once a warning has been acknowledged, the system no longer retains knowledge of that message's priority. CDU warnings and associated messages will extinguish automatically prior to pilot acknowledgement if the warning conditions are removed.

WARNING·FUNCTION/PARAMETER	PFD WARN	MESSAGE CAUTION
1) ENGINE-TRANSMISSION MONITORING		
EGT		X
ENGINE OIL TEMP		X
ENGINE OIL PRESSURE	X	
TRANSMISSION OIL TEMP		X
TRANSMISSION OIL PRESSURE	X	
ROTOR TACH	X	
ENGINE TACH	X	
GAS PRODUCER TACH	X	
TORQUE PRESSURE		X
2) CONFIGURATION MONITORING		
HYDRAULIC PRESSURE		X
CHIP DETECTORS	X	
ENGINE INLET FILTER CLOGGED		X
ENGINE FUEL PUMP		X
LT/RT BOOST PUMPS		X
FUEL FILTER CLOGGED		X
ENGINE AIR FILTER CLOGGED		X
FUEL QUANTITY LOW		X
ENGINE ICE DETECT		X
ENGINE FIRE DETECTOR	X	
DOOR		X
EXT PWR		X
EMERGENCY FUEL CONTROL		X
3) PERFORMANCE WARNING		
VNE (NEVER EXCEED)	X	
BLADE STALL		X
CONTROL AUTHORITY		X
4) AUTOPILOT DISCONNECT	X	

Table 5-7: FLIGHT WARNING SYSTEM

DETERIORATED FUNCTION LEVEL	FAILURES
LEVEL I	Reconfigured System Non-Critical Sensor Failure Radio System Inoperative
LEVEL II	Loss of Servo Commands
LEVEL III	Loss of a RODAAS Power Supply Loss of Critical CPU
LEVEL IV	Loss of Inertial Platform Loss of RODAAS Power Loss of PFD

Table 5-8: DETERIORATED FUNCTION LEVEL

Following is a description of the various Flight Warning/Advisory Function elements.

5.4.1. ENGINE/TRANSMISSION MONITORING

The Engine/Transmission Monitoring function provides various types of engine and transmission monitoring functions. An appropriate caution or warning message is displayed at the bottom of the CDU for out-of-tolerance conditions. A description of the warning conditions and connective advisories for operational monitoring follows.

5.4.1.1. EXHAUST GAS TEMPERATURE

The EGT is continuously monitored and warning given if the following exhaust gas temperatures exist. See Table 5-9, Exhaust Gas Temperature Warning Logic and Message.

5.4.1.2. ENGINE OIL TEMPERATURE

The engine oil temperature is continuously monitored and warning given if the engine oil temperature limits are exceeded.

Warning Logic: (EOT>93 °C and OAT<30 °C) or.
(EOT>100 °C and OAT>31 °C)
CDU Message: HI ENG OIL TEMP
PFD Message: CAUTION

ENGINE TYPE	WARNING LOGIC	CDU MESSAGE	PFD MESSAGE
	$400^{\circ}C < EGT < 610^{\circ}C$	NONE	NONE
	$(611^{\circ}C < EGT < 625^{\circ}C)$ and (TIME>30 MIN)	EGT MIL PWR LIM	CAUTION
T53-L-13	$(625^{\circ}C < EGT < 675^{\circ}C)$ and (TIME>10 SEC)	EGT TKOF LIM	CAUTION
	$(676^{\circ}C < EGT < 759^{\circ}C)$ and (TIME>5 SEC)	MAX START EGT	WARN
	$760^{\circ}C < EGT$	MAX EGT	WARN

Table 5-9: EXHAUST GAS TEMPERATURE WARNING LOGIC AND MESSAGE

5.4.1.3. <u>ENGINE OIL PRESSURE</u>

The engine oil pressure is continuously monitored and warning givenif the engine oil pressure limits are exceeded.

Warning Logic:	$EOP \leq 25$ PSI	$EOP \geq 100$ PSI
CDU Message:	LO ENG OIL PRES	HI ENG OIL PRES
PFD Message:	WARN	WARN

5.4.1.4. <u>TRANSMISSION OIL TEMPERATURE</u>

The transmission oil temperature is continuously monitored and warning given if the transmission oil temperature limit is exceeded.

Warning Logic:	$TOT \geq 110^{\circ}C$
CDU Message:	HI XMSN OIL TEMP
PFD Message:	CAUTION

5.4.1.5. <u>TRANSMISSION OIL PRESSURE</u>

The transmission oil pressure is continuously monitored and warning given if the transmission oil pressure limits are exceeded.

Warning Logic:	$TOP \leq 30$ PSI	$TOP \geq 70$ PSI
CDU Message:	LO XSMN OIL PRES	HI XSMN OIL PRES
PFD Message:	WARN	WARN

5.4.1.6. ROTOR TACHOMETER

The rotor tachometer is continuously monitored and warning given if the rotor tachometer limit is exceeded.

Warning Logic: (RRPM≥324 RPM .AND. NOT AUTOROTATE)
CDU Message: HI ROTOR RPM
PFD Message: WARN

Warning Logic: (RRPM≥339 .AND. AUTOROTATE)
CDU Message: MAX ROTOR RPM
PFD Message: WARN

Warning Logic: (RPM<294)
CDU Message: LO ROTOR RPM
PFD Message: WARN

5.4.1.7. ENGINE TACHOMETER

The engine tachometer is continuously monitored and warning given if the engine tachometer limits are exceeded.

Warning Logic: 6299≥ERPM≥6700
CDU Message: MAX ENG RPM
PFD Message: CAUTION

Warning Logic: (ERPM≥6900 .AND. TIME=3 SEC)
CDU Message: ENG RPM LIMIT
PFD Message: WARN

5.4.1.8. GAS PRODUCER TACHOMETER

The gas producer tachometer is continuously monitored and warning given if the gas producer tachometer is exceeded.

Warning Logic: GPT≥101.5%
CDU Message: MAX GPT
PFD Message: WARN

5.4.1.9. TORQUE PRESSURE

The torque pressure is continuously monitored and warning given if the torque pressure limit is exceeded.

Warning Logic: TP≥50 PSI
CDU Message: MAX TORQ PRES
PFD Message: CAUTION

5.4.2. AIRCRAFT CONFIGURATION MONITORING

The aircraft configuration monitor continuously checks the Hydraulic Pressure, Chip Detectors, Engine Inlet, Engine Air and Fuel Filters and Fuel Quantity, Engine Fuel Pump and LT/RT Boost Pumps, Engine Ice Detector, Engine Fire Detector, Doors, Emergency Fuel Control and external power.

The warning messages for the aircraft configuration monitor are shown in Table 5-10.

CONFIGURATION ITEMS	CDU MESSAGE	PFD MESSAGE
1. Hydraulic Pressure Low	LO HYD PRES	CAUTION
2. Chip Detector		
- Engine	ENG CHIP DET	WARN
- Transmission	XSMN CHIP DET	WARN
- Tail Rotor	TAIL CHIP DET	WARN
3. Clogged Filter		
- Engine Inlet	INLET FILTER CLOG	CAUTION
- Engine Air	AIR FILTER CLOG	CAUTION
- Fuel	FUEL FILTER CLOG	CAUTION
4. Fuel Quantity Low		
- Mains	LO FUEL-MAINS	CAUTION
5. Pumps		
- Eng Fuel	ENG FUEL PMP INOP	
- Rt Boost	RT BOOST PMP OFF	CAUTION
- Lt Boost	LT BOOST PMP OFF	CAUTION
6. Engine Ice Detector	ENG ICE DETECT	WARN
7. Engine Fire Detector	ENG FIRE DETECT	WARN
8. Door	DOOR NOT LATCHED	CAUTION
9. Emergency Fuel Control	EMER FUEL ON	CAUTION
10. External Power	EXT POWER ON	CAUTION

Table 5-10: AIRCRAFT CONFIGURATION MONITORING

5.4.3. PERFORMANCE WARNING

The airspeed warning function will detect if the never-exceed airspeed VNE is reached. VNE is computed from indicated airspeed, free air temperature and pressure altitude. The PFD will shown a flashing "warn" message and the CDU generates the message. "NEVER EXCEED AIRSPEED".

5.4.4. BLADE STALL AND CONTROL AUTHORITY WARNING

The blade stall warning will detect impending stalling of the rotor blades. The algorithm for detecting this condition will be determined by NASA at a later date.

The control authority warning will detect when control authority limits are reached. The algorithm for detecting this condition will also be determined by NASA at a later date.

5.4.5. ALTITUDE WARNINGS

Altitude alert annunciations are given for altitude command modes and for altitude reference modes. In both cases, the altitude alert function will alert the pilot when approaching or departing the reference altitude. This alerting is accomplished by an altitude alert light on the altimeter and in some cases, an aural tone.

The altitude command mode alert annunciation and aural warning are armed when a reference altitude is entered on the altitude selector and ALT ARM is selected; or when the autopilot/flight director ALT HOLD mode is engaged; or when a VNAV altitude reference has been entered on the CDU WP DATA page for the active waypoint. The ALT HOLD altitude reference takes precedence over the altitude preselector or WP DATA page altitudes. Altitude alerting criteria is indicated in Figure 5-25.

AUTOPILOT OR ALERT MODE	ALTITUDE REFERENCE	ANNUNCIATION
NONE	NONE	NONE
ALT ARM	ALT SELECTOR	ALT ALERT & HORN
ALT HOLD	ALT HOLD REFERENCE	ALT ALERT & HORN
VNAV	CDU WP DATA PAGE	ALT ALERT & HORN
MDA	CDU WP DATA PAGE	MDA ALERT on PFD
DH	CDU WP DATA PAGE	DH ALERT on PFD

Table 5-11: ALTITUDE REFERENCE AND ANNUNCIATION

The altitude reference alert annunciator is armed when a reference altitude is entered on the WP DATA page and MDA/DH is selected. The altitude command mode alert annunciator (an associated horn) is inhibited if MDA or DH has been selected, unless the altitude hold mode is engaged. Figure 5-26 shows the altitude alert controls and displays. Table 5-11 provides a synopsis of modes, altitude references and annunciators.

MDA or DH alert annunciations are armed when MDA or DH is indicated on the CDU WP DATA page as indicated in Figure 5-26. The MDA or DH annunciation will be activated when passing through the active waypoint altitude for RNAV/VOR approach or ILS approach respectively, when MDA or DH is selected on the CDU WP DATA page. When active, the MDA or DH magnitude is also displayed on the PFD. (See Figure 4-8)

5.4.6. MARKER BEACON ADVISORY FUNCTION

The marker beacon receiver provides the RODAAS Central Computer with discretes to indicate the white airway marker, the blue outer marker and the amber middle marker. When the aircraft passes over an airway marker or runway threshold, a 3000-HZ tone is generated and the message "AM" will be presented on the PFD display. (See Figure 4-8). Outer marker passage is identified by a 400-HZ audio series of dashes at 2HZ with an accompanying PFD message of "OM" flashed also at 2HZ. The middle marker is identified by alternating 1300HZ audio dots and dashes accompanied by the flashing PFD message "MM".

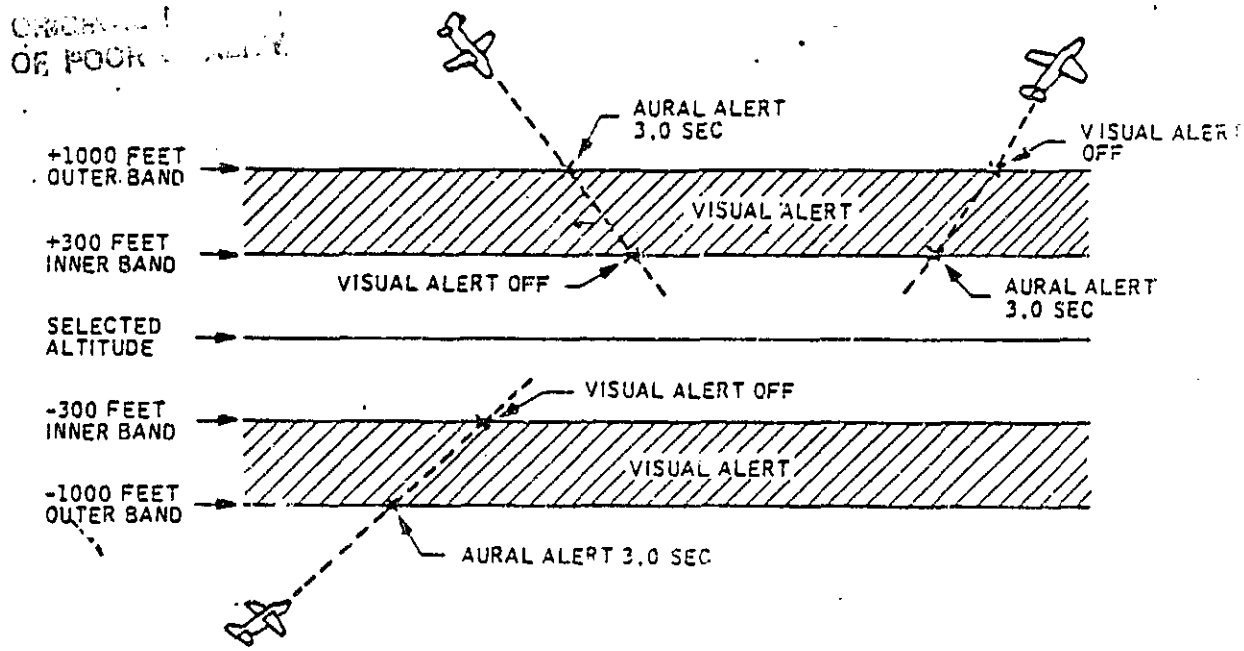

Figure 5-25: ALTITUDE ALERT FUNCTION ALERTING CRITERIA

5.4.7. AUTOPILOT/FLIGHT DIRECTOR MONITORING, WARNING

Autopilot/flight director monitoring includes:

VNAV monitoring
ILS approach monitoring
Miscellaneous monitoring

Autopilot disengagement during flight is annunciated by aural and visual means dependent upon criteria of disengagement. If appropriate, a warning message will be displayed on the CDU.

5.4.7.1. VNAV MODE MONITORING, WARNING

The autopilot VNAV mode is monitored at engagement to preclude inadvertent large pitch commands. The following parameters are monitored at engagement:

1. Navigation RNAV mode engaged
2. Active waypoint altitude defined
3. Aircraft position with respect to active waypoint in acceptable region as indicated in Figure 5-27.
4. Vertical track angle $-10 < VTA < +10$ degrees

If any of conditions 1-4 are violated, engagement is inhibited and the amber caution lamp will be lit. The warning message VNAV INVALID is also displayed. VNAV disengagement occurs if conditions 1-3 are violated after engagement or if the active

Figure 5-26: ALTITUDE ALERT CONTROLS AND DISPLAYS

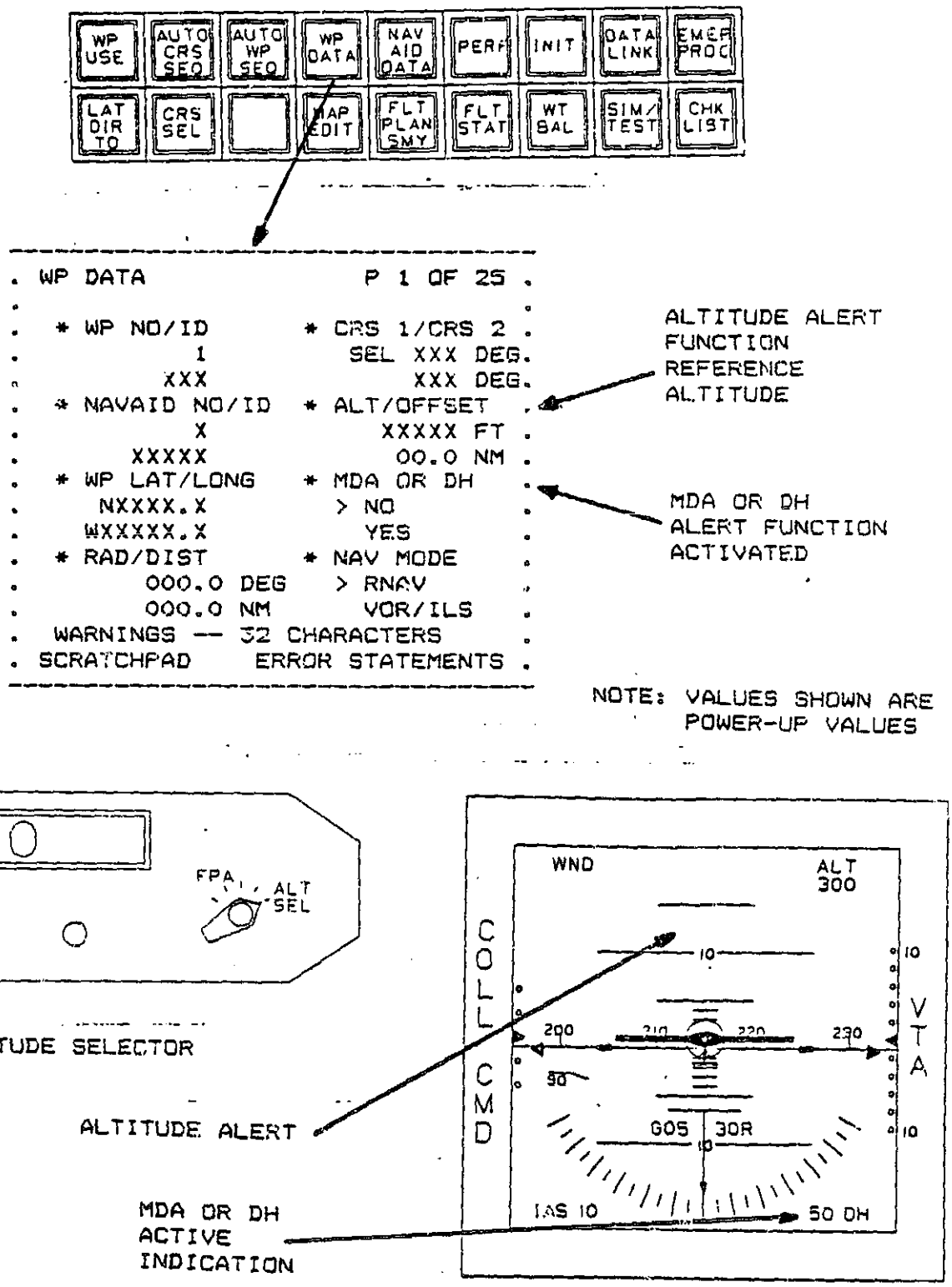

Figure 5-27: VNAV MODE ENGAGEMENT CRITERIA

ORIGINAL PAGE IS
OF POOR QUALITY

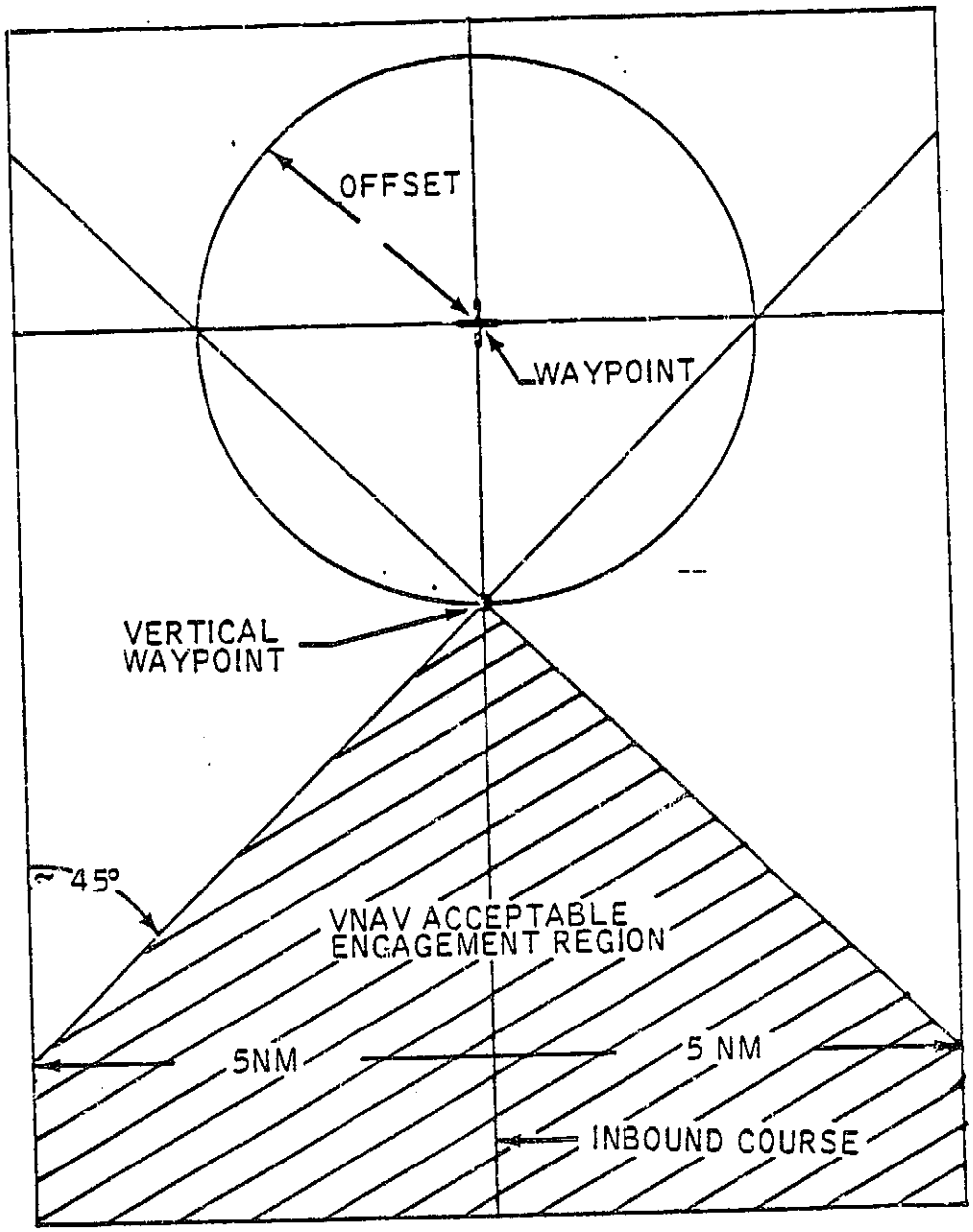

waypoint is changed in any way. Again, the message VNAV INVALID is displayed. The autopilot/flight director reverts to altitude arm, flight path angle hold and airspeed hold when so disengaged. For normal VNAV termination, no warning is given.

5.4.7.2. MISCELLANEOUS AUTOPILOT/FLIGHT DIRECTOR MONITORING, WARNING

The system monitors validity of the sensors, the RODAAS computers, and the servo actuator control loops to alert the pilot and disconnect the autopilot and SCAS when the information is faulty or when the system is not responding correctly to command signals.

Invalid signals provide both visual warning and inhibit signals, which are routed to the switching logic to "lock out" modes that will not operate reliably. Visual warnings are provided by flags and annunciators. This not only warns the pilot, but also makes it impossible to engage the system in a mode which has invalid information. For example, when a vertical reference failure exists, no vertical modes can be selected and the autopilot cannot be engaged. Specific mode logic is presented in the Autopilot/Flight Director Function description.

The RODAAS autopilot or SCAS is disengaged for the following conditions:

1. Manual disengagement
2. Autopilot Dump Switch ON.
3. Stick overforce monitor trip
4. Excessive normal acceleration indicated
5. BIT FAULT indication
   - Servo command wraparound test fail
   - Analog, discrete wraparound test fail
   - Servo monitor test fail
   (BIT monitors and tests are described in the BIT Controls and Displays discussion)

The RODAAS autopilot disengagement is accompanied by the following warning indications:

- Autopilot message on autopilot mode annunciator panel is flashed four (4) times at 1 Hz for all conditions listed above.

- Aural Horn warning for all conditions.

- RED warning message, AUTOPILOT INOP warning on CDU for conditions 3, 4, 5.

5.4.8. BIT FAULT WARNING

RODAAS inflight BIT monitors system operation and will detect faults which effect functional performance. Fault definition on the CDU display is accompanied by a red or amber light depending on criticality of the fault. BIT fault warning messages are logic are defined in the RODAAS Built-In-Test section.

5.5. GMT CLOCK FUNCTION

The RODAAS GMT clock function set and readout are indicated in Figure 5-28. The clock is initialized at power-on to 00:00, and can be set to correct time on the CDU INIT page. The clock time is displayed on the INIT page, and on the FLT STAT page. FLT STAT page 2 waypoint ETA data is based on the GMT clock time.

5.6. FUEL TOTALIZER FUNCTION

RODAAS continuously computes and displays aircraft gross weight and fuel remaining as depicted in Figure 5-29. Gross weight and fuel are initialized either directly on the INIT page, or initial values are transferred to the INIT page from the WEIGHT AND BALANCE function. Current values of fuel remaining and weight are determined using capacitance fuel gauge data and the integral of measured fuel flow as determined from the fuel flow transducers. Weight and fuel computations are reinitialized whenever new initial values are input to the system.

Current values of fuel remaining are displayed on the CDU FLT STAT page 1, and EFR values on FLT STAT page 2 are also based on the fuel totalizer computation.

Current aircraft weight can be transferred into the TAKEOFF PERFORMANCE, CLIMB PERFORMANCE, CRUISE PERFORMANCE or ARRIVAL PERFORMANCE page by use of the AUTO DATA ENTRY function.

The INIT page is the first page displayed at power-up. Appearance of the page indicates passage of power up test, and cues the pilot to initialize clock and fuel totalizer computations.

5.7. WEIGHT AND BALANCE FUNCTION

Weight and balance function input/output CDU displays are presented in Figure 5-30.

Computation algorithms are summarized in Table 5-12. Passenger and fuel weight can be entered on CDU WEIGHT AND BALANCE page 1 and 2. Weight and location of an arbitrary object can also be entered on page 2, with location entered with respect to seat 1. Total aircraft weight, total fuel, and center-of-gravity position with respect to limits are presented on page 3.

Total weight and total fuel can be transferred to initialize the fuel totalizer function (INIT page) by using the bottom touchpoint on weight and balance page 3.

5.8. PERFORMANCE COMPUTATION FUNCTION

The rotorcraft takeoff, climb, cruise and arrival functions are shown in Figures 5-31 through 5-34. The RODAAS cruise performance computation includes fuel/distance/time calculations for a defined trip segment. Four candidate performance functions and displays are described in the following paragraphs.

Figure 5-28: GMT CLOCK FUNCTION CDU CONTROLS AND DISPLAYS

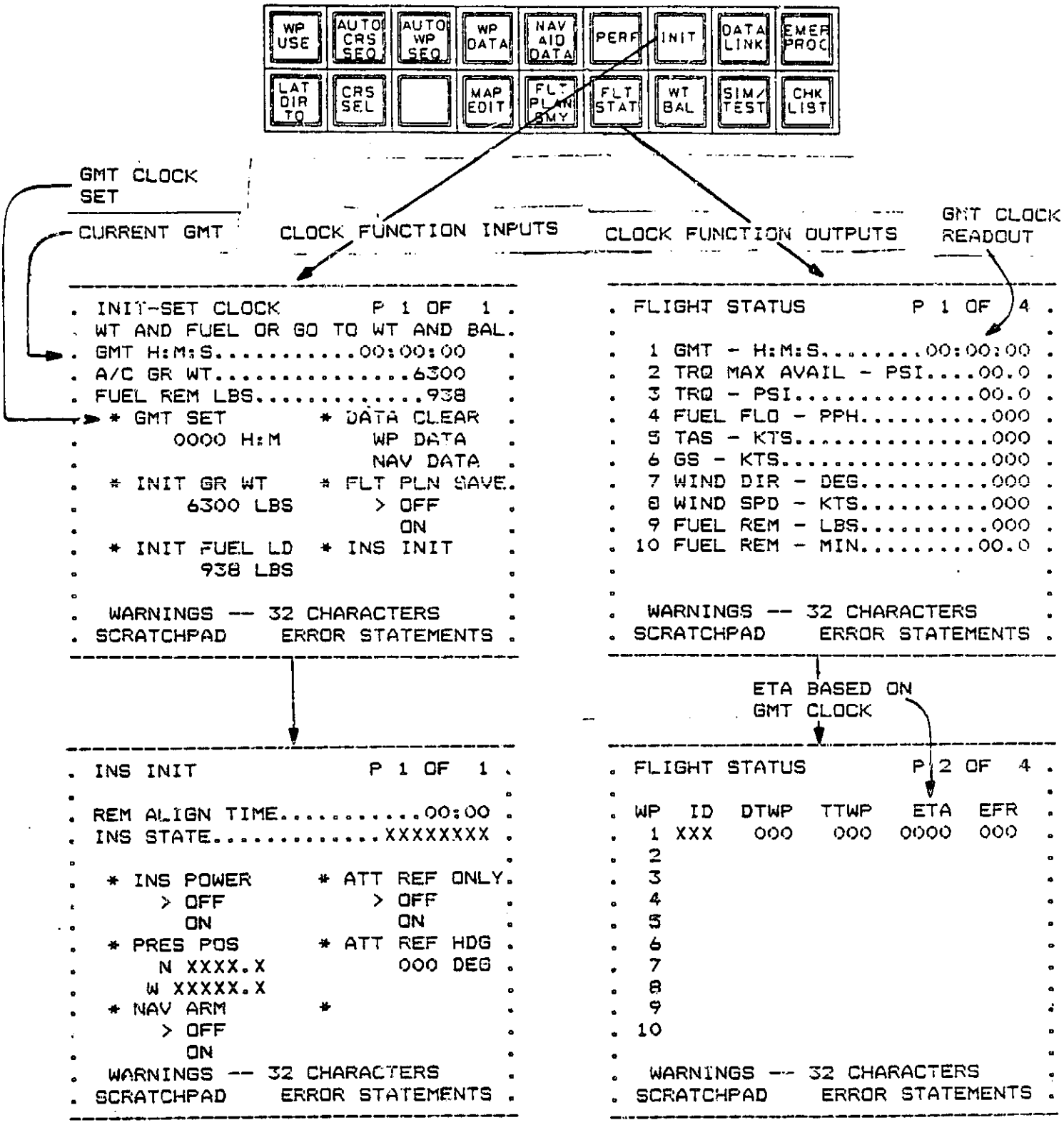

NOTE: VALUES SHOWN ARE POWER-UP VALUES

ORIGINAL PAGE IS OF POOR QUALITY

ORIGINAL PAGE IS OF POOR QUALITY

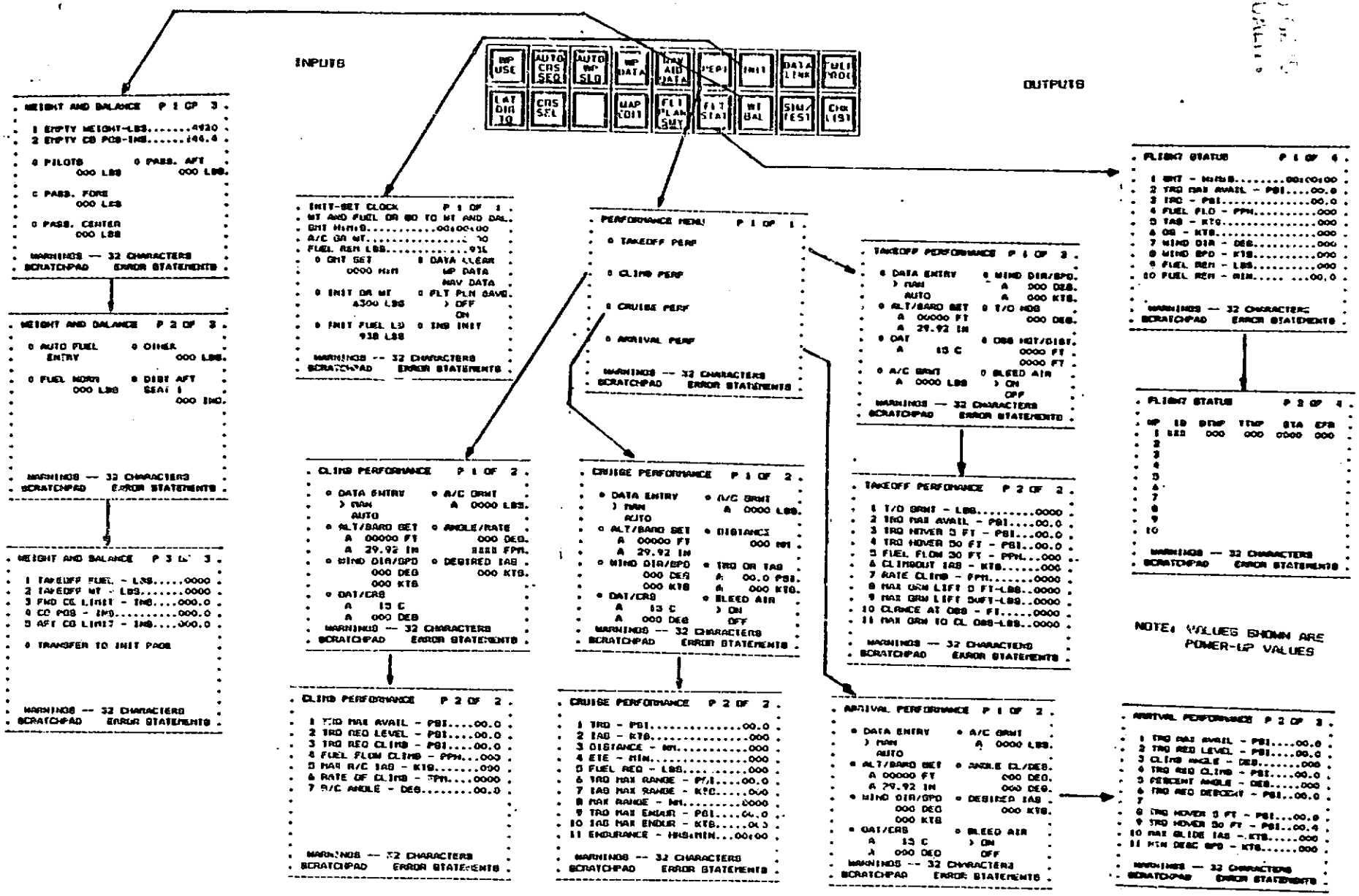

Figure 5-29: FUEL TOTALIZER FUNCTION CDU CONTROLS AND DISPLAYS

Figure 5-30: WEIGHT AND BALANCE FUNCTION CDU CONTROLS AND DISPLAYS

ORIGINAL PAGE IS
OF POOR QUALITY

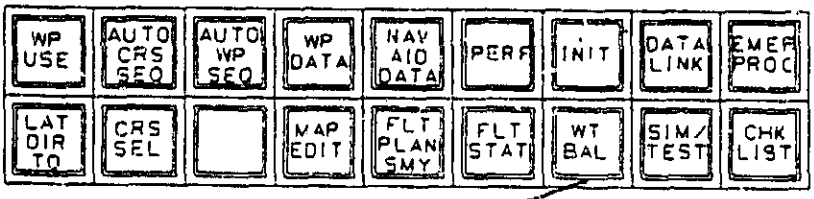

INPUTS

```
WEIGHT AND BALANCE   P 1 OF  3

 1 EMPTY WEIGHT-LBS.......4920
 2 EMPTY CG POS-INS......144.4

 * PILOTS          * PASS. AFT
        000 LBS          000 LBS.

 * PASS. FORE
        000 LBS

 * PASS. CENTER
        000 LBS

 WARNINGS -- 32 CHARACTERS
SCRATCHPAD    ERROR STATEMENTS
```

```
WEIGHT AND BALANCE   P 2 OF  3

 * AUTO FUEL       * OTHER
    ENTRY                 000 LBS.

 * FUEL NORM       * DIST AFT
        000 LBS      SEAT 1
                      000 INS.

 WARNINGS -- 32 CHARACTERS
SCRATCHPAD    ERROR STATEMENTS
```

OUTPUTS

```
WEIGHT AND BALANCE   P 3 OF  3

 1 TAKEOFF FUEL - LBS.....0000
 2 TAKEOFF WT - LBS.......0000
 3 FWD CG LIMIT - INS....000.0
 4 CG POS - INS..........000.0
 5 AFT CG LIMIT - INS....000.0

 * TRANSFER TO INIT PAGE

 WARNINGS -- 32 CHARACTERS
SCRATCHPAD    ERROR STATEMENTS
```

NOTE: VALUES SHOWN ARE POWER-UP VALUES

INPUTS	PROCESS	OUTPUTS
CDU INPUT DATA - FUEL NORM - FUEL EXT AUX - SEATS POS 1 - SEATS POS 2 - SEATS POS 4 - SEATS POS 6 - SEATS POS 7 - OTHER WEIGHT - DISTANCE BEHIND SEAT 1 CONSTANTS - EMPTY WEIGHT - EMPTY MOMENT	TAKEOFF FUEL = FUEL NORM + FUEL EXT AUX. TAKEOFF WEIGHT = EMPTY WEIGHT + TAKEOFF FUEL + SEATS POS 1 + SEATS POS 2 + SEATS POS 4 + SEATS POS 6 + SEATS POS 7 + OTHER WEIGHT FORWARD CENTER OF GRAVITY LIMIT = TBD AFT CENTER OF GRAVITY LIMIT = TBD CENTER OF GRAVITY = [EMPTY MOMENT + (ARM * FUEL NORM) + (ARM * FUEL INT AUX) + (ARM * FUEL EXT AUX) + (ARM * SEATS POS 1) + (ARM * SEATS POS 2) + (ARM * SEATS POS 4) + (ARM * SEATS POS 6) + (ARM * SEATS POS 7) + ((DISTANCE BEHIND SEAT 1 + ARM) * OTHER WT)] / TAKEOFF WEIGHT	CDU OUTPUT DATA TAKEOFF FUEL TAKEOFF WEIGHT FORWARD CENTER OF GRAVITY LIMIT AFT CENTER OF GRAVITY LIMIT CENTER OF GRAVITY

Table 5-12: WEIGHT AND BALANCE FUNCTION ALGORITHMS

Final algorithms and displays will be determined during later NASA studies.

5.8.1. TAKEOFF PERFORMANCE FUNCTION

The takeoff performance function input and output CDU displays are shown in Figure 5-30. Computation algorithms are summarized in Table 5-13. The AUTO DATA ENTRY function on the TAKEOFF PERFORMANCE, page 1 will continuously transfer current barometric altitude, barometric pressure, outside air temperature (OAT), current aircraft gross weight, wind direction and wind speed into the performance computations. These auto entry parameters are annunciated with an A on the data entry line. When in the AUTO DATA ENTRY mode, it is not possible to manually enter the automatically entered data items. It is possible to overwrite the automatic entries using the manual data entry mode.

Page 2 of the takeoff performance function shows pertinent computed takeoff performance parameters.

5.8.2. CLIMB PERFORMANCE FUNCTION

The climb performance function input and output CDU displays are shown in Figure 5-31. Computation algorithms are summarized in Table 5-14. The AUTO DATA ENTRY function on the CLIMB PERFORMANCE page 1 will continuously enter the "A" marked data entry items. Again, it is not possible to manually enter the automatic entry data items when in auto entry mode.

Page 2 of the climb performance function shows pertinent computed climb performance parameters.

5.8.3. CRUISE PERFORMANCE FUNCTION

The cruise performance, fuel/distance/time input and output CDU displays are shown in Figure 5-32. The computation algorithms are presented in Table 5-15. The AUTO DATA ENTRY function on the CRUISE PERFORMANCE page 1 will continuously enter the "A" marked data entry items. When AUTO DATA ENTRY is selected, it is not possible to manually enter these variables.

Fuel/Distance/Time is computed for a trip segment when the segment distance (DIST) is entered in the input data. Estimated time enroute (ETE) and estimated fuel required (Fuel REQ) are included in the cruise performance output data on page 2.

5.8.4. ARRIVAL PERFORMANCE FUNCTION

The arrival performance function input and output CDU displays are shown in Figure 5-33. Computation algorithms are summarized in Table 5-16. AUTO DATA ENTRY items are annunciated with an "A". It is not possible to manually enter these items when in the auto entry mode.

Figure 5-31: TAKEOFF PERFORMANCE FUNCTION CDU CONTROLS AND DISPLAYS

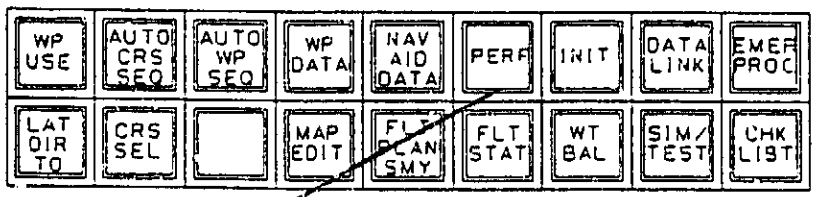

INPUTS

```
PERFORMANCE MENU        P 1 OF  1
 * TAKEOFF PERF
 * CLIMB PERF
 * CRUISE PERF
 * ARRIVAL PERF
 WARNINGS -- 32 CHARACTERS
SCRATCHPAD     ERROR STATEMENTS
```

```
TAKEOFF PERFORMANCE   P 1 OF  2
 * DATA ENTRY        * WIND DIR/SPD.
   > MAN                A    000 DEG.
     AUTO               A    000 KTS.
 * ALT/BARO SET      * T/O HDG
     A  00000 FT          000 DEG.
     A  29.92 IN
 * OAT               * OBS HGT/DIST.
     A      15 C          0000 FT
                          0000 FT
 * A/C GRWT          * BLEED AIR
     A  0000 LBS        > ON
                          OFF
 WARNINGS -- 32 CHARACTERS
SCRATCHPAD     ERROR STATEMENTS
```

OUTPUTS

```
TAKEOFF PERFOMANCE    P 2 OF  2
 1 T/O GRWT - LBS.........0000
 2 TRQ MAX AVAIL - PSI....00.0
 3 TRQ HOVER 5 FT - PSI...00.0
 4 TRQ HOVER 50 FT - PSI..00.0
 5 FUEL FLOW 50 FT - PPH...000
 6 CLIMBOUT IAS - KTS......000
 7 RATE CLIMB - FPM.......0000
 8 MAX GRW LIFT 5 FT-LBS..0000
 9 MAX GRW LIFT 50FT-LBS..0000
10 CLRNCE AT OBS - FT.....0000
11 MAX GRW TO CL OBS-LBS..0000
 WARNINGS -- 32 CHARACTERS
SCRATCHPAD     ERROR STATEMENTS
```

NOTE: VALUES SHOWN ARE POWER-UP VALUES

INPUTS	PROCESS	OUTPUTS
- ALTITUDE - BAROMETRIC PRESSURE - WIND DIRECTION - WIND SPEED - OUTSIDE AIR TEMPERATURE - AIRCRAFT WT (TAKEOFF PERFORMANCE OR INITIAL) - TAKEOFF HEADING - OBSTACLE HEIGHT - OBSTACLE DISTANCE - BLEED AIR SENSOR INPUTS - WIND DIRECTION - WIND SPEED - BAROMETRIC PRESSURE	ALTITUDE = FIELD ELEVATION + (922.9 * (29.9 - BARO PRESSURE)) WIND CORRECTION HEAD WIND = WIND MAGNITUDE * COS (WIND DIRECTION - TAKEOFF HEADING) MAX TORQUE AVAILABLE = TBD TORQUE HOVER 5 = TBD TORQUE HOVER 50 = TBD FUEL FLOW = TBD CLIMBOUT IAS = TBD RATE CLIMB = TBD MAX GRWT LIFT 5 = TBD MAX GRWT LIFT 50 = TBD DIST TO CLR OBS = TBD MAX GRWT TO CLR OBS = TBD	TORQUE MAX AVAILABLE TORQUE HOVER 5 FT TORQUE HOVER 50 FT FUEL FLOW 50 FT CLIMBOUT IAS RATE CLIMB MAX GRWT LIFT 5 FT MAX GRWT LIFT 50 FT OBS DIST TO CLR MAX GRWT TO CLR OBS

Table 5-13: TAKEOFF PERFORMANCE ALGORITHMS

Figure 5-32: CLIMB PERFORMANCE FUNCTION CDU CONTROLS AND DISPLAYS

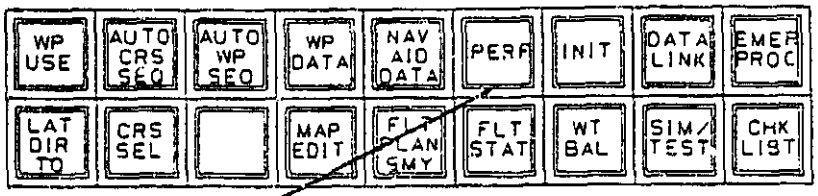

INPUTS

```
PERFORMANCE MENU        P 1 OF  1
  * TAKEOFF PERF
  * CLIMB PERF
  * CRUISE PERF
  * ARRIVAL PERF
 WARNINGS -- 32 CHARACTERS
SCRATCHPAD     ERROR STATEMENTS
```

```
CLIMB PERFORMANCE      P 1 OF  2
  * DATA ENTRY       * A/C GRWT
    > MAN              A  0000 LBS.
      AUTO
  * ALT/BARO SET     * ANGLE/RATE
    A  00000 FT          000 DEG.
    A  29.92 IN         XXXX FPM.
  * WIND DIR/SPD     * DESIRED IAS
        000 DEG          000 KTS.
        000 KTS
  * OAT/CRS
    A     15 C
    A    000 DEG
 WARNINGS -- 32 CHARACTERS
SCRATCHPAD     ERROR STATEMENTS
```

OUTPUTS

```
CLIMB PERFORMANCE      P 2 OF  2
  1 TRQ MAX AVAIL - PSI....00.0
  2 TRQ REQ LEVEL - PSI....00.0
  3 TRQ REQ CLIMB - PSI....00.0
  4 FUEL FLOW CLIMB - PPH...000
  5 MAX R/C IAS - KTS.......000
  6 RATE OF CLIMB - FPM....0000
  7 R/C ANGLE - DEG........00.0
 WARNINGS -- 32 CHARACTERS
SCRATCHPAD     ERROR STATEMENTS
```

NOTE: VALUES SHOWN ARE POWER-UP VALUES

OF POOR QUALITY

INPUTS	PROCESS	OUTPUTS
- ALTITUDE - BAROMETRIC PRESSURE - WIND DIRECTION - WIND SPEED - OUTSIDE AIR TEMPERATURE - COURSE - AIRCRAFT GROSS WEIGHT - DESIRED CLIMB ANGLE - DESIRED CLIMB RATE - DESIRED IAS SENSOR INPUTS - WIND DIRECTION - WIND SPEED - BAROMETRIC PRESSURE - OUTSIDE AIR TEMPERATURE	ALTITUDE = FIELD ELEVATION + (922.9 * (29.9 - BARO PRESSURE)) TORQUE MAX AVAILABLE = TBD TORQUE REQ LEVEL FLT = TBD TORQUE REQ CLIMB = TBD. FUEL FLOW = TBD MAX R/C IAS = TBD RATE OF CLIMB = TBD R/C ANGLE = TBD	TORQUE MAX AVAILABLE TORQUE REQ LEVEL FLT TORQUE REQ CLIMB FUEL FLOW MAX R/C IAS RATE OF CLIMB R/C ANGLE

Table 5-14: CLIMB PERFORMANCE ALGORITHMS

Figure 5-33: CRUISE PERFORMANCE FUNCTION CDU CONTROLS AND DISPLAYS

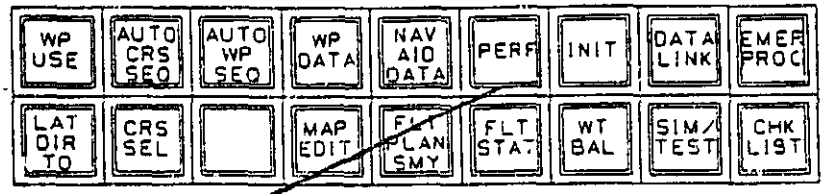

INPUTS

```
. PERFORMANCE MENU        P 1 OF  1 .
.                                   .
.  * TAKEOFF PERF                   .
.                                   .
.  * CLIMB PERF                     .
.                                   .
.  * CRUISE PERF                    .
.                                   .
.  * ARRIVAL PERF                   .
.                                   .
.  WARNINGS -- 32 CHARACTERS        .
. SCRATCHPAD    ERROR STATEMENTS    .
```

```
. CRUISE PERFORMANCE    P 1 OF  2 .
.                                 .
.  * DATA ENTRY      * A/C GRWT   .
.    > MAN             A  0000 LBS.
.      AUTO                       .
.  * ALT/BARO SET    * DISTANCE   .
.     A  00000 FT          000 NM .
.     A  29.92 IN                 .
.  * WIND DIR/SPD    * TRQ OR TAS .
.          000 DEG     A   00.0 PSI.
.          000 KTS     A    000 KTS.
.  * OAT/CRS         * BLEED AIR  .
.     A     15 C       > ON       .
.     A   000 DEG        OFF      .
.  WARNINGS -- 32 CHARACTERS      .
. SCRATCHPAD    ERROR STATEMENTS  .
```

OUTPUTS

```
. CRUISE PERFORMANCE    P 2 OF  2 .
.                                 .
.  1 TRQ - PSI...............00.0 .
.  2 IAS - KTS................000 .
.  3 DISTANCE - NM............000
.  4 ETE - MIN................000 .
.  5 FUEL REQ - LBS...........000 .
.  6 TRQ MAX RANGE - PSI....00.0 .
.  7 IAS MAX RANGE - KTS.....000 .
.  8 MAX RANGE - NM.........0000 .
.  9 TRQ MAX ENDUR - PSI....00.0 .
. 10 IAS MAX ENDUR - KTS.....000 .
. 11 ENDURANCE - HRS:MIN...00:00 .
.                                 .
.  WARNINGS -- 32 CHARACTERS      .
. SCRATCHPAD    ERROR STATEMENTS  .
```

NOTE: VALUES SHOWN ARE POWER-UP VALUES

INPUTS	PROCESS	OUTPUTS
- ALTITUDE - BAROMETRIC PRESSURE - WIND DIRECTION - WIND SPEED - OUTSIDE AIR TEMPERATURE - COURSE - AIRCRAFT GROSS WEIGHT - DISTANCE - TORQUE - TRUE AIRSPEED - BLEED AIR SENSOR INPUTS - ALTITUDE - OUTSIDE AIR TEMPERATURE - WIND DIRECTION - WIND SPEED - BAROMETRIC PRESSURE - TRUE AIRSPEED	ALGORITHMS TBD	TORQUE INDICATED AIRSPEED DISTANCE ESTIMATED TIME ENROUTE FUEL REQUIRED TORQUE - MAX RANGE IAS - MAX RANGE MAX RANGE TORQUE - MAX ENDURANCE IAS - MAX ENDURANCE ENDURANCE

Table 5-15: CRUISE PERFORMANCE FUNCTION ALGORITHMS

Figure 5-34: ARRIVAL PERFORMANCE FUNCTION CDU CONTROLS AND DISPLAYS

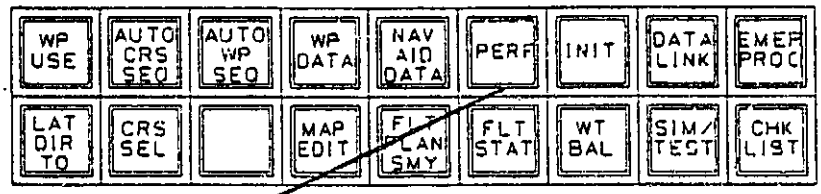

INPUTS

```
PERFORMANCE MENU        P 1 OF  1
  * TAKEOFF PERF
  * CLIMB PERF
  * CRUISE PERF
  * ARRIVAL PERF
  WARNINGS --- 32 CHARACTERS
SCRATCHPAD     ERROR STATEMENTS
```

```
ARRIVAL PERFORMANCE  P 1 OF  2
  * DATA ENTRY       * A/C GRWT
    > MAN              A  0000 LBS.
      AUTO
  * ALT/BARO SET     * ANGLE CL/DES.
     A 00000 FT            000 DEG.
     A 29.92 IN            000 DEG.
  * WIND DIR/SPD     * DESIRED IAS
         000 DEG           000 KTS.
         000 KTS
  * OAT/CRS          * BLEED AIR
     A     15 C        > ON
     A    000 DEG        OFF
  WARNINGS -- 32 CHARACTERS
SCRATCHPAD     ERROR STATEMENTS
```

OUTPUTS

```
ARRIVAL PERFORMANCE  P 2 OF  2
  1 TRQ MAX AVAIL - PSI....00.0
  2 TRQ REQ LEVEL - PSI....00.0
  3 CLIMB ANGLE - DEG.......000
  4 TRQ REQ CLIMB - PSI....00.0
  5 DESCENT ANGLE - DEG.....000
  6 TRQ REQ DESCENT - PSI..00.0
  7
  8 TRQ HOVER 5 FT - PSI...00.0
  9 TRQ HOVER 50 FT - PSI..00.0
 10 MAX GLIDE IAS - KTS.....000
 11 MIN DESC SPD - KTS......000
  WARNINGS -- 32 CHARACTERS
SCRATCHPAD     ERROR STATEMENTS
```

NOTE: VALUES SHOWN ARE POWER-UP VALUES

ORIGINAL PAGE IS OF POOR QUALITY

INPUTS	PROCESS	OUTPUTS
- ALTITUDE - BAROMETRIC PRESSURE - WIND DIRECTION - WIND SPEED - OUTSIDE AIR TEMPERATURE - AIRCRAFT WT (ARRIVAL PERFORMANCE OR INITIAL) - TAKEOFF HEADING - CLIMB ANGLE - DESCENT ANGLE - DESIRED AIRSPEED - BLEED AIR SENSOR INPUTS - WIND DIRECTION - WIND SPEED - BAROMETRIC PRESSURE - OUTSIDE AIR TEMPERATURE	ALTITUDE = FIELD ELEVATION + (922.9 * (29.9 - BARO PRESSURE)) WIND CORRECTION HEAD WIND = WIND MAGNITUDE * COS (WIND DIRECTION - TAKEOFF HEADING) MAX TORQUE AVAILABLE = TBD TORQUE REQUIRED LEVEL FLIGHT = TBD TORQUE REQUIRED DESCENT = TBD TORQUE HOVER 5 FT = TBD TORQUE HOVER 50 FT = TBD MAXIMUM GLIDE AIRSPEED = TBD MINIMUM DESCENT AIRSPEED = TBD	TORQUE MAX AVAILABLE TORQUE HOVER 5 FT TORQUE HOVER 50 FT CLIMB ANGLE TORQUE REQ CLIMB DESCENT ANGLE TORQUE REQ DESCENT MAX GLIDE AIRSPEED MIN DESC SPD TORQUE REQ LEVEL

Table 5-16: ARRIVAL PERFORMANCE FUNCTION ALGORITHMS

Page 2 of the arrival performance function shows pertinent computed arrival performance parameters.

5.9. DATA LINK SIMULATION FUNCTION

The RODAAS Data Link Function is intended to provide a demonstration data link simulation for use in the development and definition of a good airborne data link configuration. The following documents were reviewed in defining the RODAAS data link simulation function: AFC Working Paper No. 42WP-5083 DATA LINK Applications Formats (Revision 1) 12 Feb 80 by J. L. Leeper and R. S. Kennedy. A literature review and a discussion with the FAA MODE S Engineering Group in Washington, (D. Hodgkins/W. Collins 202-426-3156), was performed October 1983.

MODE S, as now planned, would not only provide conventional position and altitude information but also receive air traffic control, weather delivery, and terminal information from ground based computers. This air ground data link is being developed as a supplement to voice communication.

The RODAAS system includes the necessary hardware and software to demonstrate the following DATA LINK applications:

1. Air Traffic Control Clearance
2. Takeoff Clearance Confirmation
3. Altitude Assigned Confirmation
4. Minimum Safe Altitude Warning Alert (Terminal Area)
5. Advisory Notices to Airmen (NOTAMS)
6. Weather Advisories (Severe/Hazardous)
7. Weather Requests:
   a) Surface Observations
   b) Forecasts Terminal and Area
   c) Pilot Reports
   d) Winds Aloft
8. Air Traffic Message Acknowledgement to Ground
9. Terminal Information (ATIS)

Growth provisions and hardware compatibility:

1. Digitized Weather Radar Maps
2. Downlink of other Comm. B Airborne Messages
3. Enhanced Terminal Information Services
4. Uplink of National Weather Service S-Band Radar Information

Technology is available for the uplinking of National Weather Service S-Band Radar Information for display on airborne CRT displays. This would provide the non-radar equipped aircraft with access to radar information and other weather information from the 100 plus Nationl Weather Service stations across the entire continental United States. Given a CRT and data link device the pilot would have a weather delivery device of enormous value.

Pilot interfaces to the Data Link Simulation are through the:

DATA LINK PFD Annunciation
Horn
CDU Complex

which are indicated on Figure 5-35.

The DATA LINK "Message Pending" alert is presented on the PFD. This alert is lit whenever a DATA LINK uplink message is pending. The horn (not shown) is sounded along with the light if the uplink message is a priority message. The CDU complex is the pilot's primary interface, with the DATA LINK function. The DATA LINK page select button is used to call up DATA LINK pages on the CDU CRT. The keyboard is used to enter data.

The pilot responds to a DATA LINK "Message Pending" alert annunciation by pushing the DATA LINK function button on the CDU. This action will call up the DATA LINK page. Only one message will be displayed at a time. However, up to five message will be queued by the DATA LINK processor. Priority messages will always be moved to the top of the queue. The "Message Pending" annunciation is extinguished when all stored messages have been displayed.

DATA LINK CDU pages are shown in Figure 5-36. DATA LINK page 1 displays received messages and provides capability for message acknowledgement and message clear. DATA LINK page 2 is the weather request data input page, and includes capability to command the transmission (SEND) of the weather request message.

The DATA LINK page 1 MSG CLR touchpoint is used to remove a received message from the CDU display, and allow display of the next pending message. If no additional DATA LINK uplink messages are pending, the message field of the CDU will go blank and the DATA LINK light will go out. The DATA LINK page 1 MSG ACK touchpoint will send a message acknowledge downlink transaction to the ground station.

Examples of received messages associated with minimum safe altitude warning, takeoff clearance confirmation, and altitude assignment are as follows:

MESSAGE TYPE	EXAMPLE MESSAGE
Minimum Safe Altitude Warning	"MSAW 1500"
Takeoff Clearance Confirmation	"TAKEOFF 27R"
ATC Altitude Assignment	"MNTN 50"
	"CTAM FL230"
	"DTAM 120"

Weather report messages are presented using standard abbreviations.

Figure 5-35: DATA LINK SIMULATION CONTROLS AND DISPLAYS

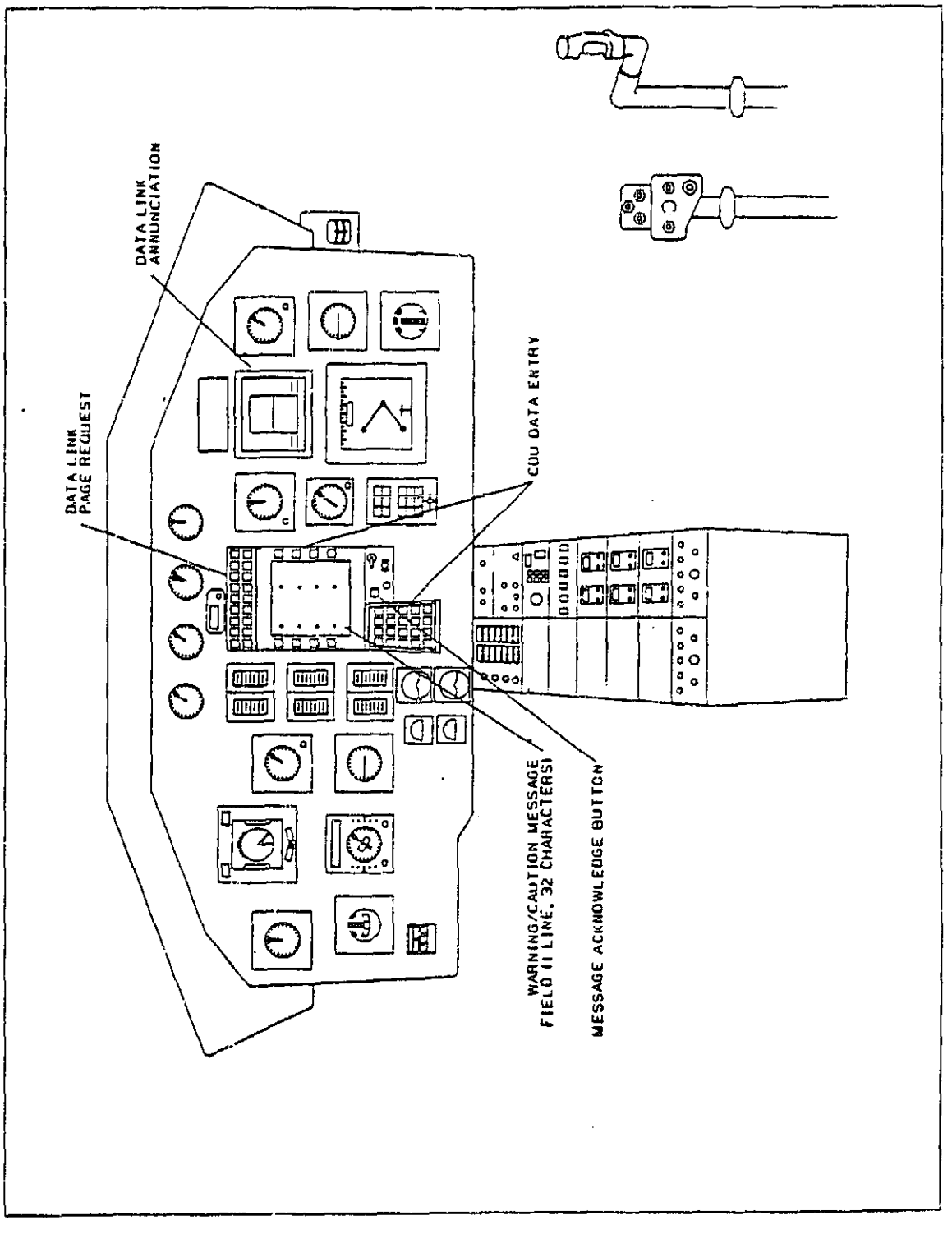

Figure 5-36: DATA LINK FUNCTION CDU CONTROLS AND DISPLAYS

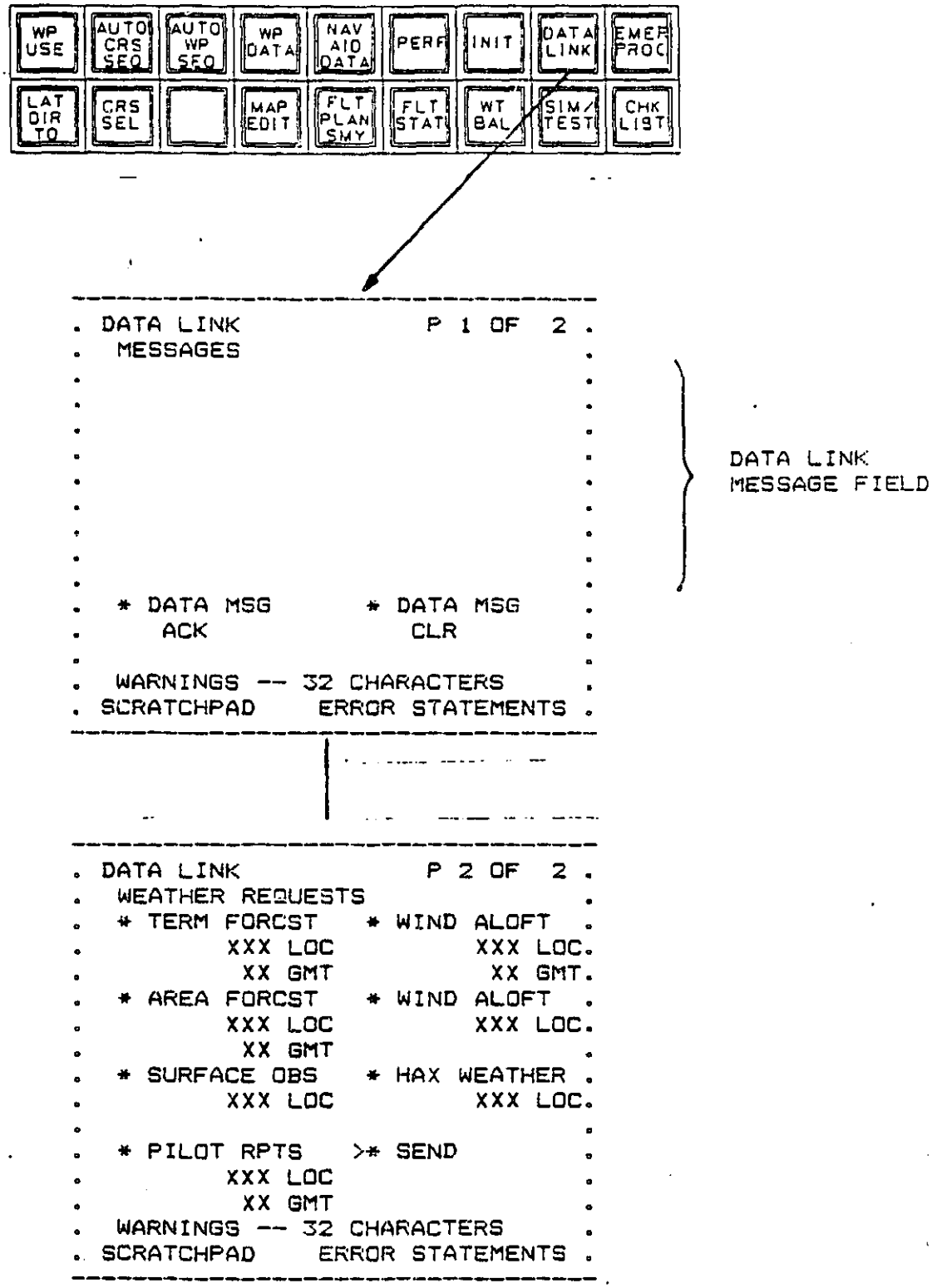

OF POOR QUALITY

Input data required for various weather reports is indicated on the CDU DATA LINK page 2. Three letter location ID (LOC) must be entered for any request. Two-digit GMT at which a forecast is desired must be entered for any request except Surface Observation. Altitude in feet must be entered for Winds Aloft request.

The SEND touchpoint is used to send a weather request message. The CDU clear key and enter keys are used along with the alphanumeric keys to enter data into the pilot request for data page. The SEND command will send weather requests as indicated by a ">". The > will point to the last selected touchpoint.

Figure 5-37 shows the basic DATA LINK information flow in the RODAAS system. Uplink and downlink transmissions are sent on dedicated serial busses between the transponder and the DATA LINK processor. This processor formats and controls all DATA LINK information. Uplink messages are sent to the CDU for display on the 488 system bus. Pilot entered data and responses are returned on the system bus to the DATA LINK processor. Pilot alert signals are also sent by the DATA LINK processor via the system to the PFD Processor which controls the annunciation.

5.10. RODAAS BUILT-IN TEST (BIT)

RODAAS includes built-in test (BIT) to assist in in-flight monitoring, maintenance and fault isolation. The BIT is designed to facilitate avionics testing in the context of projected advanced rotorcraft aviation maintenance concepts. The ultimate objective of the BIT approach is system fault detection and fault localization to a replaceable unit with confidence over 90 percent without special test equipment RODAAS includes a sampling of the BIT required to accomplish this objective.

RODAAS BIT test modes include:

In-flight test
Functional test/fault localization - automatic
Functional test/fault localization - interactive
Maintenance troubleshooting

Characteristics of the various modes are summarized in Table 5-17.

The in-flight test is continuous, and will generate a warning and cause a disengagement when a detected failure will disable a system function. The RODAAS will automatically reconfigure for some computer unit processor failures.

In-flight failures that are detected by BIT will cause a flashing warning or caution annunciator to be displayed on the PFD. A message identifying the fault will be displayed on the CDU on the line reserved for warning messages. Failure messages are defined in Table 5-18.

Figure 5-37: DATA LINK INFORMATION FLOW

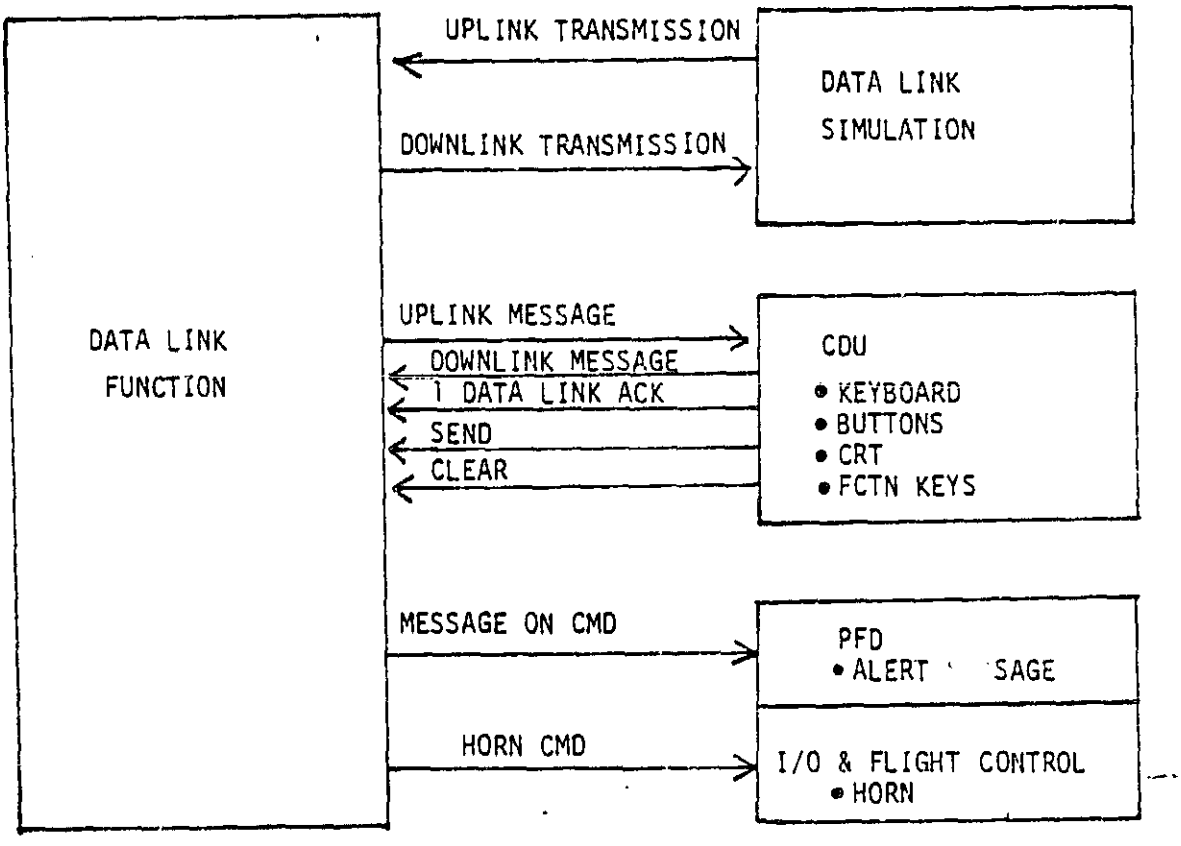

Table 5-17: RODAAS BIT MECHANIZATION

TEST MODE	INPUTS, COMMANDS	OUTPUTS
IN-FLIGHT TEST	Continuous, no input required	Warning, Failure Identification In Flight Failure Data Recording
FUNCTIONAL TEST/ FAULT LOCALIZATION AUTOMATIC	Automatic Initiation at Power Up	Warning, Failure Identification Faulty LRU, Faulty Module Identification for Selectedd Faults
FUNCTIONAL TEST/ FAULT LOCALIZATION INTERACTIVE	Test Pattern Command	CDU Test Pattern HSD Test Pattern PFD Test Pattern
MAINTENANCE TROUBLE SHOOTING		
In Flight Failure Data Declaration	Memory Word Address	Memory Word Contents Displayed (Sample at 1 second intervals)
DC Signal Generation	DC Signal Address, Magnitude Desired	DC Voltage Applied on Selected Computer Output
Discrete Signal Generation	Discrete Signal Address, State Desired	State Applied on Selected Discrete Ouput
DC Signal Measurement	Signal Address	Selected DC Voltage Magnitude Displayed (Sample at 1 second intervals)
Discrete Signal Measurement	Signal Address	Selected Discrete Signal State Displayed (Sample at 1 second intervals)

Functional-Test/Fault-Localization-Automatic is performed at power-up or when commanded by the operator and tests system components as feasible without operator interaction. This test function exercises RODAAS equipment and identifies failed LRU's as well as failed modules within the LRU as feasible.

The CDU INIT page is the first page displayed after power-up. Appearance of the INIT page indicates passage of power-up test.

Functional Localization/Interactive Testing is performed on command and allows testing of devices where operator actions or observations are necessary to complete a test. CDU, HSD and PFD test pattern tests are included in RODAAS as examples of avionics interactive testing.

MAINTENANCE TROUBLESHOOTING allows the operator to apply signals and measure signals via CDU with hardware installed in the aircraft without using external test equipment. Memory words can be displayed. Analog and discrete signals can be applied at computer outputs, and various system analog and discrete signals can be measured and displayed.

5.10.1. BIT CONTROLS AND DISPLAYS

BIT CDU pages are shown in Figure 5-38. The MAINT TEST page 1 allows selection of the warn message summary, monitor test pattern select, signal generate and measure or memory monitor pages, the EEPROM fault storage area to be cleared or the aircraft simulation page.

A summary of all acknowledged caution and warning messages can be obtained on the CDU by pressing the WARN MESSAGE SUMMARY touchpoint on the MAINT TEST page. Messages are displayed with acknowledged warning messages listed first, followed by acknowledged caution messages. As fault conditions cease to exist, the message will be removed from this page and all subsequent messages will advance.

The system test command initiates the hardware and software checks described in the BIT Mechanization section.

The HSD, CDU and PFD test patterns are checkerboards which allow evaluation of display linearity and correct graphics operation. These can be selected by pressing the MON TEST PATTERN touchpoint on the MAINT TEST page.

Selecting SIG GEN/MEAS calls the SIG GEN/MEASURE page for display. The signal operations are performed in the autopilot and I/O processor. The CDU buffers the data and sends it to the autopilot I/O processor where command signals are applied and requested signals are read, if the aircraft is on the ground and the hydraulics system is off.

Figure 5-38: BIT CDU CONTROLS AND DISPLAYS

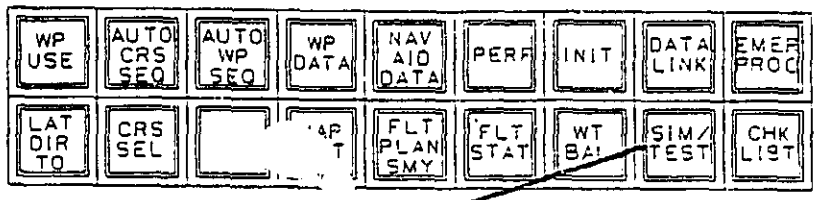


```
MAINT TEST                P 1 OF  1
 * WARN MESSAGE   * SIG GEN/
   SUMMARY          MEAS
 * SYSTEM TEST    * MEMORY MON
   INITIATE
 * MON TEST       * FAULT MEM
   PATTERNS         CLEAR
 *                * A/C SIM
 WARNINGS -- 32 CHARACTERS
SCRATCHPAD     ERROR STATEMENTS
```

```
SIG GEN/MEASURE           P 1 OF
 * DC GEN/VOLTS   * DISC GEN/VAL.
        00 ADR            0 ADR.
      +00.0 V          0000 VAL.
 * DC IN MEAS     * DISC IN MEAS.
        00 ADR            0 ADR.

 1 DC IN - VOLTS......+00.0
 2 DISC IN - VAL.......0000

 WARNINGS -- 32 CHARACTERS
SCRATCHPAD     ERROR STATEMENTS
```

```
A/C SIMULATION            P 1 OF  1
 * ALTITUDE       * A/C SIM
      00000 FT      > OFF
                      ON
 * SPEED
          000 KTS

 * CRS/HDG
          000 DEG

 * FLT PATH ANGLE
          000 DEG

 WARNINGS -- 32 CHARACTERS
SCRATCHPAD     ERROR STATEMENTS
```

```
MEMORY MONITOR            P 1 OF  1
 * ID/LOC 1       * ID/LOC 2
      0000 ID          0000 ID
      0000 LOC         0000 LOC
 * ID/LOC 3       * DISP MODE
      0000 ID        > CONT
      0000 LOC         STOP

 1 MEM WORD 1.........0000
 2 MEM WORD 2.........0000
 3 MEM WORD 3.........0000

 WARNINGS -- 32 CHARACTERS
SCRATCHPAD     ERROR STATEMENTS
```

NOTE: VALUES SHOWN ARE POWER-UP VALUES

To generate an output voltage, the least significant two bytes of the output sample and hold hex address (see Table 7-2) is entered at ADR and the selected output voltage at V.

An analog input signal may be read by selecting the appropriate hex signal address (least two significant bytes) from Table 7-1 and entering it at DC IN MEAS: ADR position. The DC voltage level for the selected signal is presented at item 1, DC IN.

Discrete signals may be generated using the DISC GEN/VAL touchpoint. The lease significant byte of the discrete output word address is entered at ADR. The bit packing for the output words and their addresses are presented in Table 7-4. The desired discretes to be set are entered at VAL.

To view discrete input states, the DISC IN MEAS touchpoint may be selected. Entering the least significant byte of the hex address in ADR will cause the selected discrete input word to be displayed at item 2, DISC IN VAL. The bit packing and word address are presented in Table 7-5.

Memory monitoring can be performed using the MEMORY MONITOR page. Processor ID numbers and the memory location to be viewed are entered as hexidecimal numbers at entry locations ID and LOC. Three such variables, in three different processors may be viewed simultaneously. The memory readout is also hexidecimal and may be presented in either continuous (CONT) or frozen (STOP) modes.

The stored fault code history can be cleared using the FAULT MEM CLEAR function touchpoint.

Selection of the A/C SIMULATION page provides a means to initialize simulation parameters and energizes the A/C simulation mode. Altitude, speed and initial course or heading are entered at their respective touchpoints. The simulation can then be engaged by toggling the A/C SIM touchpoint to the on condition.

5.10.2. BIT MECHANIZATION

RODAAS BIT tests are listed in Table 5-18.

Shown are the CPU's that perform the tests, the test mode that activates the tests, and the safety interlocks to prevent the tests during unsafe conditions. In-flight eleven tests are active. These are:

1. Processor Self-test Sample Problem - A short sample problem is performed in each processor to test its operation.

2. Watchdog Timer - The Autopilot I/O Processor and CDU watchdog timers are tested to make sure that neither has timed out. If the CDU watch dog timer times out, the CDU screen goes blank.

3. Power Supplies - The power supplies are tested for proper outputs.

4. Processor Valid Bus Test - The Bus Controller and the Autopilot I/O Processors monitor the valid words sent from each processor. These processors store failure indications and print warning measures for system failures.

5. Bus Monitoring - The Autopilot I/O Processor and the CDU test for periodic transmission from the bus controller to detect a dead bus.

6. Watchdog Timer of Bus Control Algorithm - The bus controller tests itself via the real time clock interrupt for proper sequencing through its program.

7. Servo Command Wraparound - The servo commands are tested via wrap arounds for proper command responses.

8. Data Valid Tests - The valid discretes from the inertial navigation system, radar altimeter, baro altimeter and airspeed sensor, are tested.

9. Bus Hardware Test - Check to see that IEEE 488 bus drivers are capable of sending and receiving all 1's and 0's.

10. Servo Model Comparison - The servo positions are compared against a software servo model to verify correct operation.

11. Sensor Reasonablness Tests - The sensors inputs are compared to nominal sensor response characteristics to verify correct operation.

Tests automatically intiated at power up consist of the following:

1. Processor self-test

2. Sum Check - After loading from the EEPROM memory, each memory is sum checked to verify the load.

3. WDT Hardware Tests- The Autopilot I/O Processor and CDU Processor check their watchdog timer circuitry.

4. Real Time Clock Hardware Test - Check for running clock.

Three tests are performed in the Autopilot I/O Processor when the system test is commanded.

1. Discrete Wraparound Tests - The Autopilot I/O Processor tests the discrete wraparounds for both states.

2. Analog Wraparound Tests - Analog outputs and inputs are tested via wraparound tests.

3. Servo Monitors - The servo amps and servos are tested for proper operation.

The operation of both the CDU, HSD and PFD are also tested on command. These tests check the CRT memories as well as displaying a test pat rn. Additional tests include a sum check when loading the EEPROM memory, signal generate and measure tests, and memory access testing.

BIT hardware logic is illustrated in Figure 5-39. Hardware logic is included to control:

Autopilot engagement enable
Autopilot clutch engagement enable
CDU blanking

The SCAS enable, autopilot enable, and autopilot clutch enable will be deactivated by the autopilot I/O processor for detected processor faults. The autopilot I/O processor watch dog timer (WDT) will time out for an autopilot I/O processor failure and will disenage the SCAS solonoid autopilot clutch.

The CDU processor will command the display to be blanked for a certain detected processor or bus faults. The CDU WDT and the autopilot I/O processor WDT also blank the display for detected processor or bus faults.

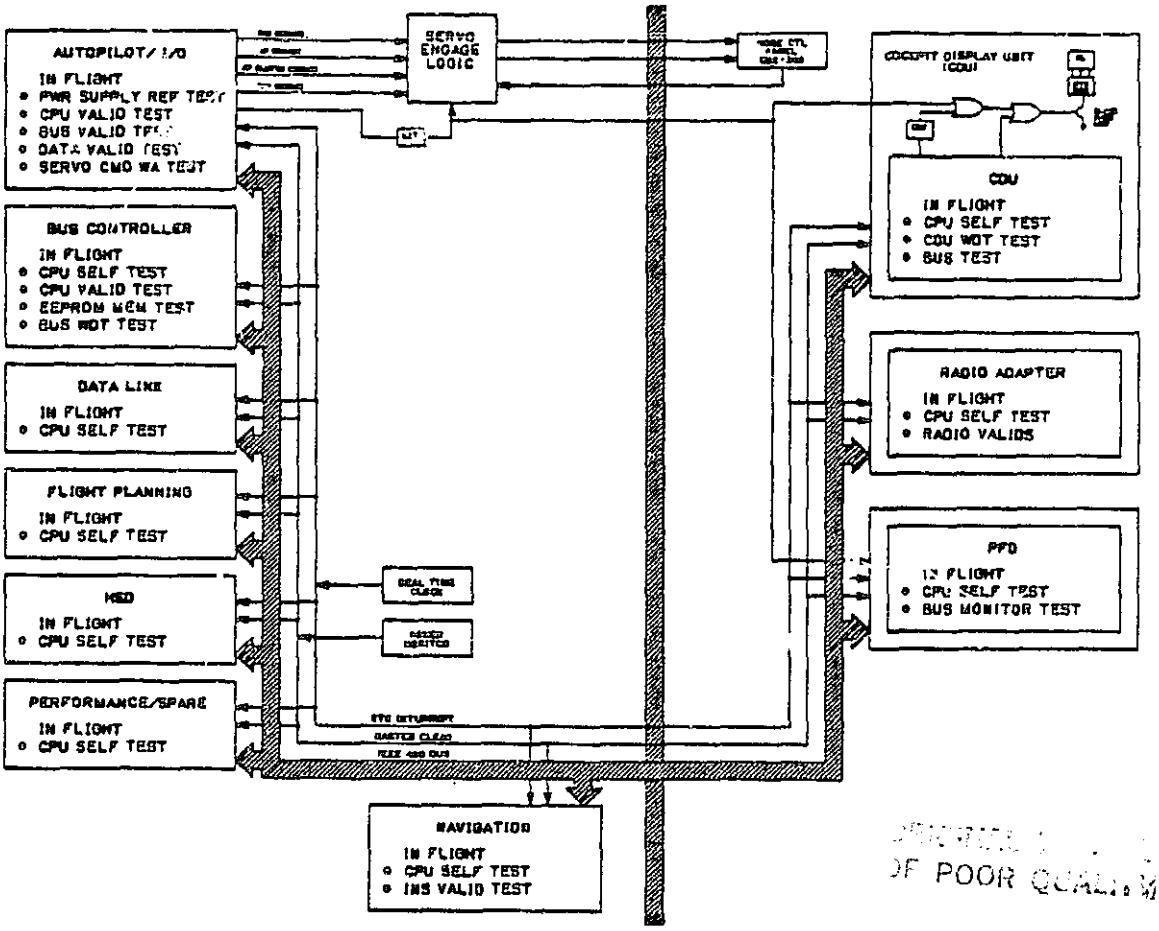

OF POOR QUALITY

Figure 5-39: RODAAS BITE HARDWARE LOGIC

TEST INIT	BIT TEST	AUTO	BUSC	SPARE	HSD	CDU	NAV	DLNK	RAU	PFD	FPLN	SYSTEM STATE ON FAILURE	ANNUNCIATION & MESSAGES	FAULT CODES
A	CPU SELF TEST	X										AUTOPILOT & IO INOP	LEVEL II ON & CDU MSG AUTOPILOT/IO INOP. WARN ON PFD	7FF7H
A	CPU SELF TEST		X									RODAAS SHUTDOWN	LEVEL III ON & CDU BLANK. WARN ON PFD.	7FF8H
A	CPU SELF TEST			X								SPARE INOP, PERF INOP, RECON INOP	LEVEL II ON & CDU MSG PERF/SPARE INOP CAUTION ON PFD	7FF6H
A	CPU SELF TEST				X							SPARE RECON PERF INOP	LEVEL II ON & CDU MSG HSD-SPARE IN USE CAUTION ON PFD	7FF5H
A	CPU SELF TEST					X						CDU INOP	LEVEL II ON & CDU BLANK. WARN ON PFD	7FF3H
A	CPU SELF TEST						X					NAVIGATION & LINS INOP	LEVEL II ON & CDU MSG NAV/LINS INOP CAUTION ON PFD	7FF9H
A	CPU SELF TEST							X				DATA LINK INOP	LEVEL I ON & CDU MSG DATA LINK INOP CAUTION ON PFD	7FF2H
A	CPU SELF TEST								X			RADIO NAV SYS INOP	LEVEL II ON & CDU MSG RADIO SYS INOP CAUTION ON PFD	7FF1H
A	CPU SELF TEST									X		PFD INOP	LEVEL II ON & CDU MSG PFD INOP PFD BLANK	7FFAH
A	CPU SELF TEST										X	FLIGHT PLAN INOP	LEVEL II ON & CDU MSG FLT PLN INOP CAUTION ON PFD	7FF4H
A	WATCH DOG TIMER TEST	X										AUTOPILOT INOP	LEVEL II ON & CDU MSG WDT TIMEOUT WARN ON PFD	E57FH
A	+5V POWER SUPPLY TEST	X										RODAAS SHUTDOWN	LEVEL III ON & CDU BLANK WARN ON PFD	XFE7H

Table 5-18: RODAAS BIT TESTS

TEST INIT	BIT TEST	AUTO	BUSC	SPARE	HSD	CDU	NAV	DLNK	RAU	PFD	FFLN	SYSTEM STATE ON FAILURE	ANNUNCIATION & MESSAGES	FAULT CODES
A	+-15V POWER SUPPLY TEST	X										RODAAS SHUTDOWN	LEVEL III ON & CDU BLANK WARN ON PFD	XFD7H XFC7H
A	+-21V POWER SUPPLY TEST	X										AUTOPILOT MODES DISENGAGED	LEVEL I ON & CDU MSG AIR DATA INOP (XF7) CAUTION ON PFD	XFB7H XFA7H
A	+-12V POWER SUPPLY TEST	X										NO CHANGE	LEVEL I ON & CDU MSG PLUS(MINUS) 12V INOP CAUTION ON PFD	XEF7H XEE7H
A	24V POWER SUPPLY TEST	X										NO CHANGE	LEVEL I ON & CDU MSG BATT INOP (ED7) CAUTION ON PFD	XED7H
A	26VAC POWER SUPPLY TEST	X										AUTOPILOT MODES INOP	LEVEL I ON & CDU MSG 26VAC INOP (F97) WARN ON PFD	XF97H
A	PROCESSOR VALID WORD TESTS	X										FAILURE DEPENDENT		XE4XH
A	BUS MONITOR					X						RODAAS SHUTDOWN	LEVEL III ON, CDU BLANK WARN ON PFD	XE3XH
A	RATE TREE MONITOR		X									RODAAS SHUTDOWN	LEVEL III ON, CDU BLANK WARN ON PFD	XE3BH
A	SERVO,DISC CMD WRAPAROUND TEST											A/P DISENG ALL FAILURES	LEVEL II ON & CDU MSG BELOW,WARN ON PFD	
	.PITCH SRVO CMD	X										A/P DISENG	AUTOPILOT INOP(F87)	XF87H
	.ROLL SRVO CMD	X										A/P DISENG	AUTOPILOT INOP(F77)	XF77H
	.YAW SRVO CMD	X										A/P DISENG	AUTOPILOT INOP(F67)	XF67H
	.COLL SRVO CMD	X										A/P DISENG	AUTOPILOT INOP( )	
	.FLT CRIT DISC	X										A/P DISENG	AUTOPILOT INOP( )	
A	DATA VALID TESTS													
	.RADAR ALTIMETER	X										AUTOPILOT MODES INOP	LEVEL I ON & CDU MSG RADAR ALT INOP (EA7) CAUTION ON PFD	XEA7H
	.BARO ALTIMETER	X										ALT MODES INOP	LEVEL I ON & CDU MSG BARO ALT INOP (E97) CAUTION ON PFD	XE97H

TEST INIT	BIT TEST	^ TO	BUSC	SFARE	HSD	CDU	NAV	DLNK	REU	PFD	FPLN	SYSTEM STATE ON FAILURE	ANNUNCIATION & MESSAGES	FAULT CODES
	.IAS VALID	X										IAS MODES INOP	LEVEL I ON & CDU MSG IAS INOP (E87) CAUTION ON PFD	XE87H
	.INS ATT VALID						X					RODAAS SHUTDOWN	LEVEL III ON, CDU BLANK WARN ON PFD	
	.AIRDATA VALID	X										ALT OR IAS MODES INOP	LEVEL I ON & CDU MSG AIRDATA INOP ( ) CAUTION ON PFD	
A	BUS HARDWARE TEST		X									RODAAS SHUTDOWN	LEVEL III ON & CDU BLANK , WARN ON PFD	XE2XH
A	BUS HARDWARE TEST	X		X	X	X	X	X	X	X	X	PRODESSOR INOP	LEVEL II ON & CDU MSG PROC INOP (XXX) WARN ON PFD	
B	POWER UP TESTS													
	.CPU SELF TEST	X	X	X	X	X	X	X	X	X	X	RODAAS SHUTDOWN	LEVEL III ON CDU BLANK WARN ON PFD	
	.MEM LOAD SUMCK	X	X	X	X	X	X	X	X	X	X			
	.WDT TIMER TEST	X				X	X							
	.RTC TEST		X											
C	SYSTEM TEST CMD											A/P DISENG	LEVEL II ON & CDU MSG BELOW, WARN ON PFD	
	.DISC W/A TEST	X											AUTOPILOT INOP (F37)	XF37H
	.ANAL W/A TEST	X											AUTOPILOT INOP (F27)	XF27H
	.SERVO TEST	X											AUTOPILOT INOP (F17)	XF17H
D	TEST PATTERNS													
	.CDU						X					NONE	NONE	
	.PFD									X		NONE	NONE	
	.HSD				X							NONE	NONE	
D	EEPROM SUMCHECK		X									UTILITY ONLY	LEVEL III ON & MSG TO PRINTER CDU BLANK	
D	STIM/MEAS TEST	X												
D	MEMORY ACCESS	X	X	X	X	X	X	X	X	X	X			
D	FAILURE RECORDING		X											

5.10.3. SIMULATOR MODE

The RODAAS system has the capability of simulating navigation and aircraft sensor signals on the ground in order to test or demonstrate the navigation and flight control features of the system.

In order to use the simulator, the operator must first set up the aircraft simulation page with appropriate initial conditions. The initial simulation altitude, speed, course or heading and desired flight path angle may be entered on the A/C SIMULATION page.

The operator enters the simulator mode by pushing the simulator mode touchpoint on the A/C simulation page (see Figure 5-38). The status arrow will move from OFF to ON. If the hydraulic pressure is on, the system will not go into the simulator mode and the CDU screen will indicate simulator mode for 1-second before returning to simulator off.

Navigation is simulated as follows: When the pilot puts the system into the simulator mode, the aircraft location is initialized to coincide with the active waypoint. In all navigation modes the waypoint distance, bearing and course deviation are found by integrating air speed to calculate the aircraft's latitude and longitude. Wind speed is assumed to be zero.

In ILS approach, a course deviation signal is simulated by limiting the difference between the waypoint bearing and the course to ± 3 degrees.

All required radio and inertial signals are assumed to be valid. Any waypoint specified as RNAV is assumed to have a valid DME signal from its NAVAID.

The simulation of the aircraft dynamics will be similar to that shown in Figure 5-40.

5.11. CHECKLISTS, EMERGENCY PROCEDURES

Typical stored UH-1H checklists and emergency procedures will be implemented. Individual rotorcraft checklist and emergency items (Figure 5-41,5-42) are to be defined at a later date. The CDU page back/advance control can be used to step from checklist to checklist. The checklist or procedure item arrow can be advanced by hitting the ENTR button. The arrow cannot be backspaced.

Figure 5-40: RODAAS AIRCRAFT SIMULATION

Figure 5-41: CDU CHECKLISTS

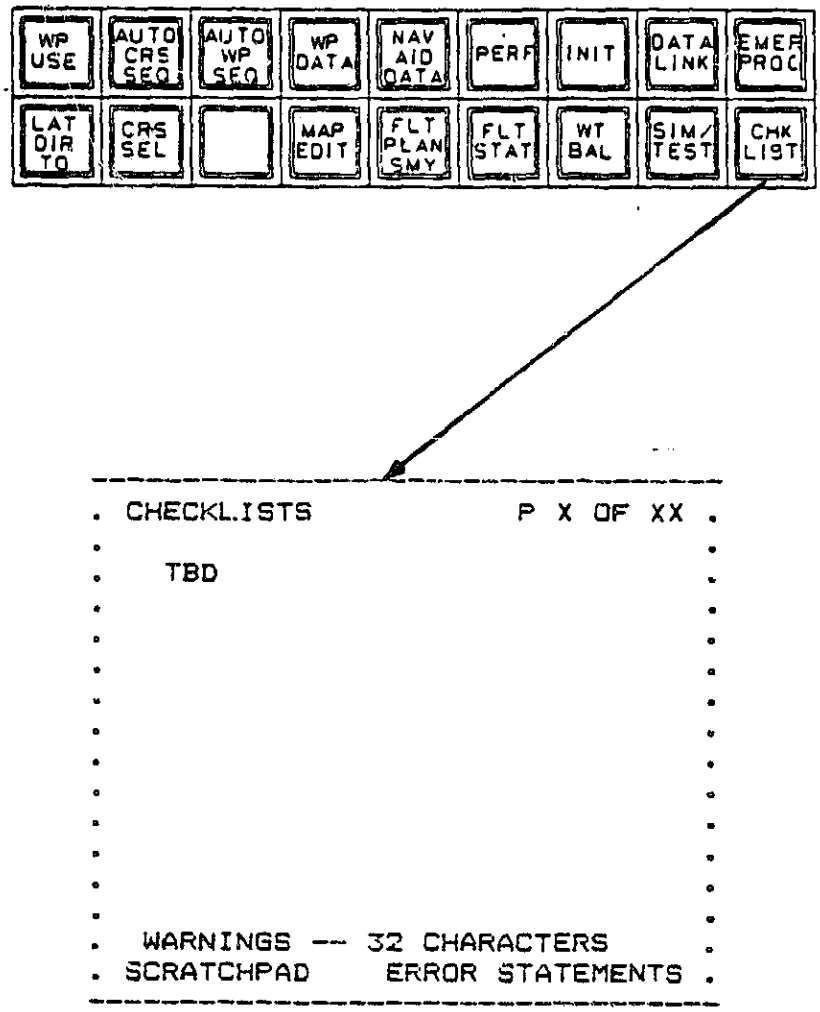

Figure 5-42: CDU EMERGENCY PROCEDURES CHECKLISTS

OF POOR QUALITY

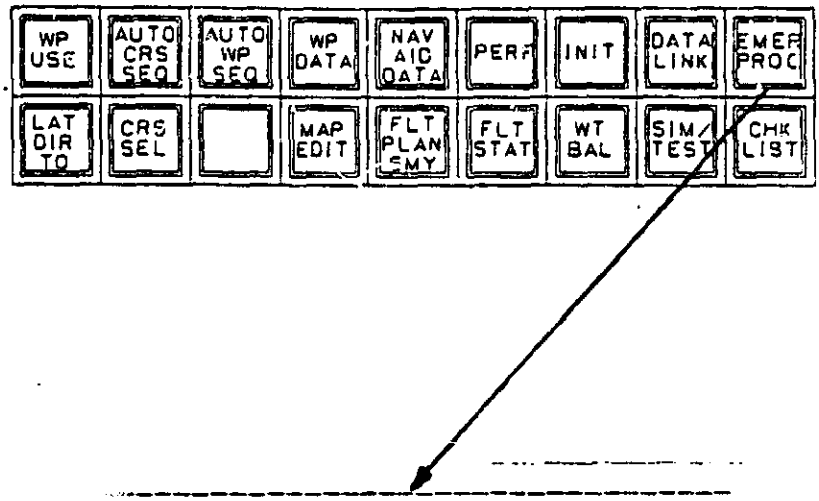


```
EMERGENCY PROC          P X OF XX

  TBD

 WARNINGS -- 32 CHARACTERS
SCRATCHPAD    ERROR STATEMENTS
```

6. PILOT INSTRUMENT PANEL

The left side cockpit panel (Figure 6-1) has all instruments required for IFR flight. The attitude indicator is an electrically driven artificial horizon. It is isolated from the RODAAS system, as are all safety pilot electronics, in the unlikely event of RODAAS electrical failure. The horizontal situation indicator provides digital readout of TACAN DME distance, computed groundspeed and time-to-station as well as a pictorial navigation indicator. The safety pilot NAV receiver and compass system provide data for this instrument. Standard rotorcraft engine instruments and status panels are arranged for convenient use of both right and left seat pilots.

The safety pilot communication transceiver, as well as the NAV receiver, are located on the center pedestal. These radios are independent of RODAAS and are for use of the safety pilot, but are also available to the RODAAS pilot. All radio system audio is controlled through the dual pilot/safety pilot audio panels.

The safety pilot NAV receiver is connected to the horizontal situation indicator on the safety pilot side. DME information is provided by one of the RODAAS receivers, provided that the radio tuning select switch is in the manual position. This switch is located on the center pedestal.

For safety pilot use, the automatic/manual tuning switch is placed in the manual position and the radios tuned using their frequency selectors. The desired radio information to be displayed on the RMI is selected using the bearing select switch on the RMI. Both VOR or TACAN bearing information is available.

The KFS 576 Digital Transponder is independent of RODAAS and can be operated by either pilot.

Engine starting, fuel management and power switches will be centrally located, so that the safety pilot will have adequate access.

An overhead circuit breaker panel will provide the pilots with a means to disconnect RODAAS functions.

The safety pilot panel, including central instrumentsand controls, thus provides complete facilities for IFR flight independent of the RODAAS system.

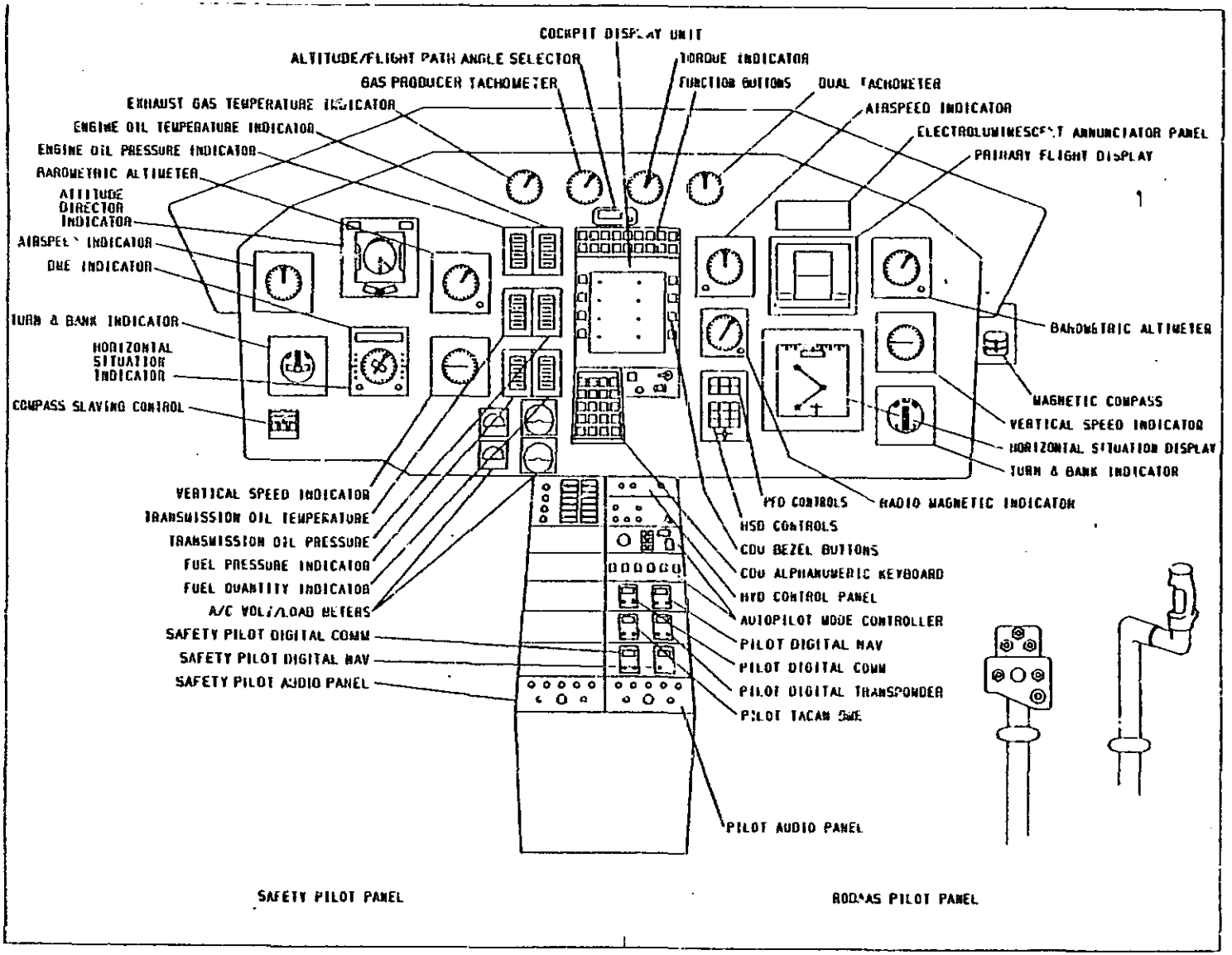

Figure 6-1: UH-1H CONTROL PANEL AND CONTROL PANEL LAYOUT

ORIGINAL PAGE IS OF POOR QUALITY

7. RODAAS SYSTEM INTERFACE

The RODAAS system block diagram is shown in Figures 3-2 and 3-3. The interfaces connecting the system elements are as follows:

Computer I/O
Computer/CDU interface
Computer/HSD interface
Computer/RAU interface
Computer/PFD interface
Computer/IRS interface

7.1. COMPUTER I/O

The computer I/O is the system interfacing with the aircraft. It includes all aircraft sensor inputs and command outputs. It consists of analog inputs, analog outputs, discrete inputs, and discrete outputs. All inputs and outputs are memory mapped. Table 7-1 shows the analog inputs along with the sensor output scaling, prefilter characteristics, and prefilter output scaling. There are 64 analog inputs, including 13 spares. Table 7-2 shows the analog outputs together with the sample and hold output scaling and the computer box output scaling where applicable. A total of 16 outputs are provided. Tables 7-3 and 7-4 list the discrete inputs and outputs. As shown there are 48 discrete outputs including nine spares and 48 discrete inputs including two spares. Both the discrete inputs and outputs are implemented as bit packed words. The inputs are implemented with four words and use 12 bits of each word.. The outputs are implemented with three words that use 16 bits each. The complement of the output of word 1 is "wrapped around" to input word 4 for monitoring purposes.

7.2. COMPUTER/CDU INTERFACE

The computer/CDU interface is accomplished over the IEEE 488 bus. This bus is a 16-wire, 8-bit parallel bus. The data transmitted over this bus includes keyboard output data, CDU messages, HSD display related information, etc. Various data buffer contents that are transmitted over the bus are TBD.

7.3. COMPUTER/HSD INTERFACE

The computer/HSD interface consists of a coaxial video cable. The video information for the HSD display is generated in the HSD refresh memory which is located in the computer box. This video information is transmitted over the coax cable to the HSD. The coax has an impedance of 75 ohms.

7.4. COMPUTER/RAU INTERFACE

The computer/RAU interface is accomplished over the IEEE 488 bus.

Data buffer contents that are transmitted to/from the RAU over the IEEE-488 bus are TBD.

7.5. COMPUTER/PFD INTERFACE

The computer/PFD interface is accomplished over the IEEE 488 bus. Data buffer contents that are transmitted over the IEEE 488 bus are TBD.

7.6. COMPUTER/IRS INTERFACE

The computer/IRS interface is accomplished over the IEEE 488 bus to the navigation computer. The NAV computer then uses an ARINC 429 bus to communciate with the IRS hardware. Data buffer contents that are transmitted over the IEEE 488 are TBD. Arinc 429 data bus buffer data presented in Table 7-5.

Table 7-1: RODAAS ANALOG INPUTS

SIGNAL NAME	REF NO	SENSOR OUTPUT	PREFILTER GAIN	FILTER TIME	PREFILTER OUTPUT	SENSOR FULL SCALE	FULL SCALE @ A/C	FULL SCALE @ A/D	HEX ADDR
LORAS TRUE ..SPEED	1								
LORAS (OAT)	2								
FUEL PRESSURE	3								
FUEL QUANITY (MAINS)	4								
FUEL QUANITY (AUX)	5								
XSMN OIL TEMP	6								
XSMN OIL PRESSURE	7								
INDICATED AIRSPEED	8								
BARO. ALTITUDE	9								
RADAR ALTITUDE	10								
ENGINE OIL TEMP	11								
ENGINE OIL PRESSURE	12								
EXHAUST GAS TEMP	13								
TORQUE PRESSURE	14								
ENGINE RPM NO. 1	15								
ENGINE RPM NO. 2	16								
GAS PRODUCER TACH	17								
PITCH RATE	18								
LORAS PRESSURE	19								
PITCH SERVO FEEDBCK	20								
ROLL SERVO FEEDBACK	21								
YAW SERVO FEEDBACK	22								
COLLECTIVE SERVO FBK	23								
	24								
H - DOT	25								
PITCH SERVO CMD WA	26								
ROLL SERVO CMD WA	27								
YAW SERVO CMD WA	28								
COLLCTVE SRVO CMD WA	29								
BIT COMMAND WA	30								
	31								
	32								
	33								
	34								
	35								
	36								
	37								
PLUS 5 VDC	38	1 V/V	1	0.02	+5 VDC				861EH
PLUS 26 VAC	39	1 V/V	0.27 VDC / VAC	0.02	0.27 VDC / VAC			10 VDC / 37 VAC	8626H
PLUS 15 VDC	40	1 V/V	0.5	0.02	0.5 V/V				863EH
MINUS 15 VDC	41	1 V/V	0.5	0.02	0.5 V/V				865EH
PLUS 21 VDC	42	1 V/V	0.249	0.02	0.249 V/V				861CH
MINUS 21 VDC	43	1 V/V	0.249	0.02	0.249 V/V				8637H
PLUS 28 VDC	44	1 V/V	0.249	0.02	0.249 V/V				867EH
PLUS 12 VDC	45	1 V/V	0.5	0.02	0.5 V/V				865CH
MINUS 12 VDC	46	1 V/V	0.5	0.02	0.5 V/V				867CH
	47								
	48								
	49								
	50								

Table 7-2: RODAAS ANALOG OUTPUTS

SIG NO	SIGNAL NAME	OUTPUT @ S / H	OUTPUT @ CC BOX	HEX ADDR
1	PITCH SERVO COMMAND			8000H
2	ROLL SERVO COMMAND			8002H
3	YAW SERVO COMMAND			8004H
4	COLLECTIVE SERVO CMD			8006H
5				8008H
6				800AH
7				800CH
8				800EH
9				8010H
10				8012H
11				8014H
12				8016H
13				8018H
14				801AH
15				801CH
16				801EH

Table 7-3: RODAAS DISCRETE INPUTS

BIT NO.	INPUT WORD 1 8800H	INPUT WORD 2 8802H	INPUT WORD 3 8804H	INPUT WORD 4 8806H
15	IAS (1=ON)	APENG (1=ENG)	HYD PRESS LOW	AP CLTCH ENG
14	HDG SEL (1=ON)	SCAS ENG (1=ENG)	ENG CHIP DETECT	AP SOL HOLD
13	APPR (1=ON)	AP SCAS DISCONNCT	XSMN CHIP DETECT	SCAS SOL HOLD
12	NAV (1=ON)	FLT DIR (1=ON)	T RTR CHIP DETECT	ALTITUDE ENG
11	VNAV (1=ON)		ENG IN FLTR CLGD	CLCTVE SOL ENG
10	ALTITUDE (1=ON)		AIR FLTR CLGD	
9	ALT ARM (1=ON)	ENG ICE DETECT	FUEL FLTR CLGD	
8	SYS INTLK (0=LCK)	ENG FIRE DETECT	BARO ALT VALID	
7	FPA (1=ON)	EMERG FUEL CNTRL	IAS VALID	
6	HOV (1=ON)	EXT POWER ON	AIR DATA ALT VAL	CMPTR VALID
5	GO AROUND (0=ON)	DOORS OPEN	RADAR ALT VALID	INS MODE SEL #
4	MM SENSE	PREFLT TEST	INS ALIGN	INS MODE SEL #
3	AM SENSE	FLT TEST # 1	ENG FUEL PMP VAL	
2	OM SENSE	FLT TEST # 2	RT BOOST PMP ON	
1	TRIM/FREE 1ST DTN	INS ON DC	LT BOOST PMP ON	
0		INS PTCH RATE VAL	INS FAULT	

Table 7-4: RODAAS DISCRETE OUTPUTS

BIT NO.	OUTPUT WORD 1 8200H	OUTPUT WORD 2 8202H	OUTPUT WORD 3 8204H
15	AP CLTCH ENGAGE		
14	AP SOL HOLD		
13	SCAS SOL HOLD		
12	ALT ENGAGE		
11	COLLECTIVE ENG		
10			
9			
8			
7			
6	CMPTR VALID		
5	INS MODE SEL # 1		
4	INS MODE SEL # 2		WARNING HORN
3			
2			
1			
0			

Table 7-5: ARINC 429 BUFFER DATA

SIGNAL	POSITIVE SENSE	MNEMONIC	OCTAL LABEL
HRZ ACCEL ALONG TK	FORWARD	AATO	362
BODY LATERAL ACCEL	RIGHT	ALAO	332
BODY LONGIT ACCEL	FORWARD	ALONGO	331
BODY NORMAL ACCEL	UP	ANORMO	333
BODY PITCH RATE	UP	QO	326
BODY ROLL RATE	RIGHT WING DOWN	PO	327
BODY YAW RATE	NOSE RIGHT	RO	330
CROSS TRK HRX ACCEL	RIGHT	ACTO	363
DRIFT ANGLE	RIGHT	DRIFTF	321
E - W VELOCITY	EAST	VEF	367
FLIGHT PATH ACCEL	FORWARD	AFPTHO	323
FLIGHT PATH ANGLE	UP	GAMIF	322
GROUND SPEED	ALWAYS POSITIVE	VGF	312
GROUND SPEED - BCD	ALWAYS POSITIVE	VGF - BCD	012
INERTIAL ALTITUDE	UP	HF	361
INERTIAL VERT SPD	UP	VZF	365
IRS DISCRETES	N/A	IRSDIS	270
IRS MAINT DISCRETE	N/A	ISRNT	350
MAGNETIC HDG - BCD	CW FROM NORTH	PSIMF-BCD	014
MAGNETIC HEADING	CW FROM NORTH	PSIMF	320
N - S VELOCITY	NORTH	VNF	366
PITCH ANGLE	UP	THTF	324
PITCH ATT RATE	UP	THTDF	336
PLATFORM HEADING	CW FROM 0 DEG	PSICF	334
POS LATITUDE	NORTH FROM 0 DEG	ELATXF	310
POS LATITUDE - BCD	NORTH FROM 0 DEG	ELATXF-BCD	010
POS LONGITUDE	EAST FROM 0 DEG	ELONXF	311
POS LONGITUDE - BCD	EAST FROM 0 DEG	ELONXF-BCD	011
ROLL ANGLE	RIGHT WING DOWN	PHIF	325
ROLL ATT RATE	RIGHT WING DOWN	PHIDF	337
TRK ANGLE RATE	CW	TKRTF	335
TRK ANGLE TRUE	CW FROM NORTH	PSITF	313
TRK ANGLE TRUE - BCD	CW FROM NORTH	PSITF-BCD	044
TRK ANGLE - MAG	CW FROM NORTH	PSITMF	317
TRUE HEADING	CW FROM NORTH	PSIF	314
TRUE HEADING - BCD	CW FROM NORTH	PSIF - BCD	044
VERTICAL ACCEL	UP	AVERTO	364
WIND DIRECTION	CW FROM NORTH	PSIWF	316
WIND DIRECTION - BCD	CW FROM NORTH	PSIWF-BCD	016
WIND SPEED	ALWAYS POSITIVE	VWF	315
WIND SPEED - BCD	ALWAYS POSITIVE	VWF - BCD	015
BITE TEST WORD	N/A	IRS BITE	277
POTENTIAL VERT SPEED	UP	PVS	360

1. Report No.	2. Government Accession No.	3. Recipient's Catalog No.
NASA CR 166611		

4. Title and Subtitle	5. Report Date
Rotorcraft Digital Advanced Avionics System (RODAAS) Functional Description	November 1984
	6. Performing Organization Code: FSN
7. Author(s): Eric M. Peterson, Jim Bailey and Tom J. McManus	8. Performing Organization Report No.
	10. Work Unit No.: T4311
9. Performing Organization Name and Address: Honeywell Military Avionics Division, 1625 Zarthan Avenue, St. Louis Park, MA 55416	11. Contract or Grant No.: NAS2-11695
12. Sponsoring Agency Name and Address: National Aeronautics & Space Administration, Washington, D.C. 20546	13. Type of Report and Period Covered: Contractor Report
	14. Sponsoring Agency Code: RTOP 532-01-11

15. Supplementary Notes

Point of Contact: George P. Callas, Ames Research Center, MS 210-9, Moffett Field, CA 94035 (415)649-5454 or FTS 8 465-5454.

16. Abstract

A functional design of a rotorcraft digital advanced avionics system (RODAAS) was conducted to transfer the technology developed for general aviation in the Demonstration Advanced Avionics System (DAAS) program to rotorcraft operations. The objective was to develop an integrated avionics system design that will enhance rotorcraft single pilot IFR operations without increasing the required pilot traning/experience by exploiting advanced technology in computers, busing, displays and integrated systems design. A key element of the avionics system is the functionally distributed architecture that has the potential for high reliability with low weight, power and cost. The document provides a functional description of the RODAAS hardware and software functions.

17. Key Words (Suggested by Author(s))	18. Distribution Statement
AVIONICS, HELICOPTERS, INTEGRATED SYSTEMS, CREW STATION, DIGITAL AVIONICS, HUMAN FACTORS, ROTORCRAFT	UNLIMITED SUBJECT CATEGORY - 04

19. Security Classif. (of this report)	20. Security Classif. (of this page)	21. No. of Pages	22. Price*
UNCLASSIFIED	UNCLASSIFIED	182	

*For sale by the National Technical Information Service, Springfield, Virginia 22161