NASA Technical Memorandum 88875

Lubricant Effects on Bearing Life

Erwin V. Zaretsky
Lewis Research Center
Cleveland, Ohio

(NASA-TM-88875) LUBRICANT EFFECTS ON BEARING LIFE (NASA) 22 p CSCL 11H
N87-15467
Unclas
G3/37 40238

Prepared for the
OEM Design '86 Conference
New York, New York, December 9-11, 1986

LUBRICANT EFFECTS ON BEARING LIFE

Erwin V. Zaretsky
Chief Engineer for Structures
National Aeronautics and Space Administration
Lewis Research Center
Cleveland, Ohio 44135

E-3253-1

SUMMARY

Lubricant considerations for rolling-element bearings have within the last two decades taken on added importance in the design and operation of mechanical systems. The phenomenon which limits the usable life of bearings is rolling-element or surface pitting fatigue. The elastohydrodynamic (EHD) film thickness which separates the ball or roller surface from those of the raceways of the bearing directly affects bearing life. Chemical additives added to the lubricant can also significantly affect bearings life and reliability. The interaction of these physical and chemical effects is important to the design engineer and user of these systems. Design methods and lubricant selection for rolling-element bearings are presented and discussed.

INTRODUCTION

In rolling-element bearing application, the lubricant can have a marked effect on bearing life and load capacity. Figure 1 illustrates the required points of lubricant in a ball bearing. These lubrication points are the cage-ball interface, the cage-race interface and the ball-race contracts.

Most bearing failures occur because of lubricant starvation at these points or improper lubricant selection. This problem becomes more acute with high-temperature applications.

A lubricant has four major functions:

(1) Provide a separating film between rolling and sliding contacting surfaces, figure 1, thus preventing wear.

(2) Act as a coolant to maintain proper bearing temperature.

(3) Prevent the bearing from being contaminated by dirt and other contaminates.

(4) Prevent corrosion of bearing surfaces.

Depending on the type of intervening film and its thickness, a number of lubrication regimes can be identified. A classical way of depicting some of these regimes is by use of the well known Stribeck curve (fig. 2). Stribeck performed comprehensive experiments on journal bearings around 1900. He measured the coefficient of friction as a function of load, speed, and temperature. He had difficulty, however, condensing this data into usable form. Some years later, Hersey performed similar experiments and devised a plotting format based on a dimensionless parameter. The Stribeck curve, or more appropriately, the

Stribeck-Hersey curve, takes the form of the coefficient of friction as a function of the viscosity of the liquid (Z), velocity (N), and load (P) parameter, ZN/P.

At high values of ZN/P which occur at high speeds, low loads, and at high viscosity, the surfaces are completely separated by a thick (>0.25 μm) (>10^{-5} in.) lubricant film. This area is that of hydrodynamic lubrication where friction is determined by the rheology of the lubricant. For nonconformal concentrated contacts where loads are high enough to cause elastic deformation of the surfaces and pressure-viscosity effects on the lubricant, another fluid film regime, elastohydrodynamic lubrication (EHD), can be identified. In this regime film thickness (h) may range form 0.025 to 2.5 μm (10^{-6} to 10^{-4} in.).

As film thickness becomes progressively thinner, surface interactions start taking place. This regime of increasing friction, which combines asperity interactions and fluid film effects, is referred to as the mixed lubrication regime.

Finally, at low values of the ZN/P parameter, one enters the realm of boundary lubrication. This regime is characterized by the following:

(1) This regime is highly complex, involving metallurgy, surface topography, physical and chemical adsorption, corrosion, catalysis, and reaction kinetics.

(2) The most important aspect of this regime is the formation of protective surface films to minimize wear and surface damage.

(3) The formation of these films is governed by the chemistry of the film-forming agent, as well as the surface of the solid and other environmental factors.

(4) The effectiveness of these films in minimizing wear is determined by their physical properties, which include shear strength, thickness, surface adhesion, film cohesion, melting point or decomposition temperature, and solubility.

Besides the Stribeck Hersey curve (fig. 2) already described, an idealized plot of wear rate as a function of relative load can also delineate the various lubrication regimes and some wear transitions (fig. 3).

Region OA of figure 3 encompasses the regimes of hydrodynamic and EHD lubrication, the latter as point A is approached. Since no surface interactions occur in this region except for startup or shutdown, little or no wear occurs. (This excludes rolling-element fatigue, which can occur without surface interactions.) Region AX is the mixed lubrication regime where surface interactions begin to occur at A and become more prevalent as point X is approached. Wear is low because fluid film effects still exist.

Next there is region XY in figure 3, which is the region of boundary lubrication. The degree of metal-to-metal contact and the wear rate increase as the load increases. Wear is mild and tends to be corrosive to the left of B and adhesive to the right of B. The location of B is quite variable and depends on the corrosivity of the lubricant formulation. For a noncorrosive

lubricant, adhesive wear can occur at X. On the other hand, a corrosive additive can extend the boundary regime to Z' before boundary film failure occurs. Region YZ is the regime of severe wear where severe adhesion and scoring occur. Machinery cannot operate successfully in this region, and, therefore, the location of this transition point is quite important. At point Z total surface failure occurs, followed by seizure.

In the boundary lubrication regime many properties of the liquid lubricant become important. These include shear strength, film thickness, melting point, and chemical reactivity with the surface. Operating variables which will affect lubricant film-performance include load, speed, temperature, and atmo phere, as already discussed. Additives present in the lubricant to serve specific functions will also affect behavior. These additives include antiwear, antifoam, antioxidants, viscosity improvers, and others.

SYMBOLS

a	contact ellipse radius transverse to rolling direction, m (in.)
b	contact ellipse radius in rolling direction, m (in.)
D	ball or roller diameter, m (in.)
d	inner ring track diameter, m (in.)
E	modulus of elasticity parameter, N/m^2 (psi)
E'	material elasticity parameter, N/m^2 (psi)
f	conformity
G	dimensionless EHD materials parameter
H_c	dimensionless central EHD film thickness
H_{min}	dimensionless minimum EHD film thickness
h_c	central EHD film thickness, m (in.)
h_{min}	minimum EHD film thickness, m (in.)
k	contact ellipse ratio, a/b
N	speed
P	dimensionless pressure
p	bearing pitch diameter, $p = d + D$, m (in.)
p'	pressure, N/m^2 (psi)
Q	normal force, N (lb)

R_A, R_B rolling radius, m (in.)

R_x equivalent radius in rolling direction, m (in.)

R_y equivalent radius transverse to rolling direction, m (in.)

r radius of body, m (in.)

U average surface velocity in x direction, m/sec (in./sec)

U_D dimensionless EHD speed parameter

u_A, u_B surface velocity of body in x direction, m/sec

W dimensionless EHD load parameter

x rolling direction coordinate

y transverse direction coordinates

Z viscosity

α_p pressure-viscosity coefficient, m^2/N (psi^{-1})

β contact angle, deg

η_0 absolute viscosity of fluid at ambient pressure N sec/m^2 (lb sec/in.^{2})

λ ratio of film thickness to composite roughness

ξ Poisson's ratio

ρ inverse curvature sum, m^{-1} ($in.^{-1}$)

σ composite surface roughness, m (in.)

σ_A, σ_B surface roughness of body, m (in.)

ω angular rotation velocity, rad/sec

Subscripts:

A,B elastic bodies

c cage

i inner race

o outer race

x,y reference planes

1,2 bodies 1 and 2

ELASTOHYDRODYNAMICS LUBRICATION

Most rolling-element bearings have between their rolling elements and raceways an elastohydrodynamic film separating the contacting bodies during motion. This is illustrated for the rollers of figure 4, whose surfaces shown in the enlarged view of the contact are not in direct contact but are separated by a highly compressed, extremely thin lubricant film. Because of the high pressures in the contact zone the lubrication process is accompanied by some elastic deformation of the contact surface shown in figure 5. For this reason, this process is referred to as elastohydrodynamic (EHD) lubricant. Grubin was among the first to identify this phenomenon, which also occurs for other oil-lubricated, rolling machine elements such as gears. Contour plots for a dimensionless film thickness and pressure are shown in figure 6 for a ball on a flat plate.

Hamrock and Dowson have derived a simplified approach to calculating the EHD film thickness. They provide dimensionless groupings as follows (refer to fig. 5):

Dimensionless minimum film thickness:

$$H_{min} = \frac{h_{min}}{R_x} \tag{1}$$

which occurs at the trailing edge of the contact. Dimensionless central film thickness:

$$H_c = \frac{h_c}{R_x} \tag{2}$$

which is the average film thickness across the entire contact. The equivalent radius in the rolling direction R_x is given by

$$\frac{1}{R_x} = \frac{1}{r_{A,x}} + \frac{1}{r_{B,x}} \tag{3}$$

and where the equivalent radius transverse to the rolling direction can be found from

$$\frac{1}{R_y} = \frac{1}{r_{A,y}} + \frac{1}{r_{B,y}} \tag{4}$$

Dimensionless speed parameter:

$$U_D = \frac{\eta_0 U}{E' R_x} \tag{5}$$

where the average surface speed of bodies A and B is

$$U = \frac{u_A + u_B}{2} \tag{6}$$

and where the reduced modulus of elasticity is

$$E' = \frac{2}{\left(\frac{1 - \xi_A^2}{E_A} + \frac{1 - \xi_B^2}{E_B}\right)} \tag{7}$$

Dimensionless load parameter:

$$W = \frac{Q}{E'R_x} \tag{8}$$

Dimensionless materials parameter:

$$G = \alpha_p E' \tag{9}$$

Contact ellipse ratio:

$$k = \frac{a}{b} \tag{10}$$

where a and b are the radii of the contact ellipse, with radius a oriented perpendicular to the rolling direction x.

Referring to equations (3) and (4) the equivalent radii for roller and ball bearings are given in figure 7. Also, from this figure, the entrainment velocity or average surface speed U at the inner and outer raceway contact can be derived for equation (5) where for a bearing inner race

$$U_i = \left(\frac{P^2 - D^2}{4P}\right)\left(\omega_i - \omega_o\right)$$

and at the outer race

$$U_o = \left(\frac{P^2 - D^2}{4P}\right)\left(\omega_o - \omega_i\right) \tag{11}$$

Since for most applications the outer raceway does not rotate and ω_o equal 0, then

$$U_i = U_o = U \tag{12}$$

The conventional method of calculating the contact ellipse ratio is to find a solution to a transcendental equation that relates the ellipse ratio and the elliptic integrals of the first and second kinds to the geometry of the contacting solids. This is usually accomplished by some iterative numerical

procedure. The following simple expression for k, which eliminates the necessity for that procedure, was derived by Brewe and Hamrock:

$$k = \left(\frac{R_y}{R_x}\right)^{2/\pi} \tag{13}$$

for $0.01 \leq R_y/R_x \leq 100$,

The approximate solution of the ellipse ratio as obtained from equation (13) is within 3 percent of the exact solution for k between 0.056 and 18. For R_y/R_x greater than unity the major diameter of the contact ellipse will be oriented perpendicular to the rolling direction.

The influence of k and the dimensionless speed U_D, load W, and materials G parameters on the minimum and central film thicknesses was investigated theoretically for the viscous-elastic regime by Hamrock and Dowson. The ellipse ratio was varied from 1 to 8, the dimensionless speed parameter was varied over nearly two orders of magnitude, and the dimensionless load parameter was varied over one order of magnitude. Conditions corresponding to the use of solid materials of bronze, steel, and silicon nitride and lubricants of paraffinic and naphthenic oils were considered in obtaining the exponent on the dimensionless materials parameter. Thirty-four cases were used in obtaining the following dimensionless minimum-film-thickness formula:

$$H_{min} = 3.63\ U_D^{0.68} G^{0.49} W^{-0.073}\ (1 - e^{-0.68k}) \tag{14}$$

For pure cylindrical roller contact (i.e., line contact) $k = \infty$ and the term in the parentheses in equation (14) equals 1.

The procedure used to obtain the central film thickness is the same as that used to obtain the minimum film thickness and results in the following formula:

$$H_c = 2.69\ U_D^{0.67} G^{0.53} W^{-0.067}\ (1 - 0.61\ e^{-0.73k}) \tag{15}$$

The measure of the effectiveness of the lubricant film is the "lambda" (λ) ratio (i.e., h_c/σ, central film thickness divided by the composite surface roughness of the rolling-element surfaces). Usually the root-mean-square (rms) surface finishes of the contacting bodies σ_A and σ_B are used to determine the composite surface roughness as follows:

$$\sigma = (\sigma_A^2 + \sigma_B^2)^{1/2} \tag{16}$$

The λ ratio can be used as an indicator of rolling-element performance and life. For $\lambda < 1$, surface smearing or deformation, accompanied by wear, will occur on the rolling surface. For $1 < \lambda < 1.5$, surface distress may be accompanied by superficial surface pitting. For $1.5 < \lambda < 3$, some surface glazing can occur with eventual roller failure caused by classical subsurface-originated rolling-element fatigue. Figure 8 shows the effect of λ on rolling-element fatigue life. At $\lambda \geq 3$, minimal wear can be expected with

extremely long life; failure will eventually be by classical subsurface-originated rolling-element fatigue. The most expedient, although not the least expensive, way of attaining high λ ratio is to select a high-quality surface finish.

BOUNDARY LUBRICATION

Extreme-pressure and antiwear additives in the lubricating fluid form a film on the surfaces by a chemical reaction, absorption, or chemisorption. These boundary films can be thinner than 0.025 μm (1 μin.) or several micro-inches thick. These films are formed from the chemical reaction of sulfur or from the chemisorption of iron stearate. Film thickness varies for various types of film. The films can separate the metal surfaces when the EHD film becomes thin enough for the asperities to interact. The boundary film probably lubricates by microasperity-elastohydrodynamic lubrication, where the asperities deform under the load. The boundary film prevents contact of the asperities and at the same time provides low-shear-strength properties that prevent shearing of the metal and reduce the friction coefficient below that of the base metal. These boundary films provide lubrication at different temperature conditions depending on the materials used. For example, some boundary films will melt at a lower temperature than others and will then fail to protect the surfaces. The "failure temperature" is the temperature at which the lubricant film fails. In extreme-pressure lubrication this failure temperature is the temperature at which the boundary film melts.

The melting point or thermal stability of surface films appears to be a unifying physical property governing failure temperature for a wide range of materials. It is based on the observation that only a solid film can properly interfere with potential asperity contacts. For this reason many extreme-pressure lubricants contain more than one chemical for protection over a wide temperature range. For instance, Borsoff found that phosphorous compounds are superior to chlorine and sulfur at slow speeds, but sulfur is superior at high speeds. He explains this as a result of the increased surface temperature at the higher speeds. (Most extreme-pressure additives are chemically reactive and increase their chemical activity as temperature is increased.) Horlick found that some metals such as zinc and copper have to be removed from lubrication systems when using certain extreme-pressure additives.

There is strong indication that at λ ratios less then 1-1/2, boundary films can affect the resultant fatigue life of rolling surfaces. Rolling-element fatigue tests were performed by the author and his colleagues in the NASA five-ball fatigue tester with an acid-treated white oil containing either 2.5 percent sulfurized terpene, 1 percent didoderyl phosphite or 5 percent chlorinated wax. With the exception of the chlorinated wax additive, these additives showed essentially no statistical differences between the lives using the base oil with the additive and those without the additive. The presence of the chlorinated wax produced surface distress and a significant reduction in life.

The additives used in the base oil did not change the life ranking of the bearing steels in those tests where rolling-element fatigue was of subsurface origin. That is, regardless of the additive content of the lubricant, the lives of the three bearing steels tested ranked in descending order as follows: AISI 52100, AISI M-50, AISI 1018. Recent published work by the authors and his

collegues showed that with spur gears, where λ is approximately 1, the presence of a phosphorous-type load carrying additive in the lubricant produced a significant improvement in life over lubricants without this type of additive. The presence of a sulphus type antiwear additive also showed an improvement in life. However, this improvement was not considered statistically significant.

The presence of the antiwear and extreme-pressure additive to lubricant rolling-element bearings is extremely important especially under heavily loaded, high-speed, high-temperature conditions. These additives protect the contacting surface from wear and surface distress even under favorable EHD lubrication conditions in raceway contacts. In many cases, boundary lubrication is dominant between the cage and ball (roller) contact and the cage-race contact (see fig. 1). Without the additive forming a boundary film, gross wear can occur.

LUBRICANT SELECTION

The useful bulk temperature limits of several classes of fluid lubricants in an oxidative environment are given in table I. Grease lubricants are listed in Table II. The heat transfer requirements of bearings dictate whether a grease lubricant can be used. Grease lubrication permits the use of simplified housing and seals.

The most commonly used lubricant is mineral oil, both in liquid and grease form table III. As a liquid, mineral oil usually contains an antiwear or extreme-pressure (EP) additive, an antifoam agent, and an oxidation inhibitor. In grease the antifoam agent is not required.

Synthetic lubricants have been developed to overcome some of the harmful effects of lubricant oxidation. However, synthetic lubricants should not be selected over readily available and invariably less-expensive mineral oils if operating conditions do not require them. It is usually easier to incorporate synthetic lubricants in a new design than to convert an existing machine to their use.

The selection of a lubricant is not always independent of the application. Hence, very little can be done once the machine is in the field. However, where choice can be made, the designer or the person selecting the lubricant should consider the anticipated operating temperature of the bearings. In most cases, the lubricants heat transfer and rhelogical properties will affect this temperature. However, a first order estimate can be made and the selection can be made on the lubricants limiting temperature. Once, the chemical type has been selected, lubricant viscosity should be a consideration. Table III gives comparative viscosities for various numerical oil classifications. Knowing the viscosity at the bearing temperature and the pressure-viscosity coefficient of the selected lubricant (table IV give representative values of pressure-viscosity coefficient α_p) the EHD film thickness can be calculated together with the film parameter λ and realtive bearing life. Where there are too low values of λ or life, consideration may be given to either lowering bearing temperature, increasing bulk lubricant viscosity and/or changing lubricant type.

LUBRICANT ADDITIVE SELECTION

Unlike the lubricant, it is almost impossible to independently select a lubricant additive package from a given lubricant brand. While the lubricant chemical type is known, generally the additives contained therein are proprietary to the manufacturer. Unless, there is economic incentive for the manufacturer to blend an additive package for a given use, the machine designer is locked into what is currently in the market place. Probably no two lubricant manufacturers supply the same additive package even though supplying the same base stock. Hence, the major difference between brands x and y will be the additives contained therein.

Some of the extreme-pressure additives commonly used contain one or more compounds of chlorine, phosphorus, or sulfur or lead soaps. Many chlorine-containing compounds have been suggested as extreme-pressure additives, but few have actually been used. Some lubricants are made with chlorine-containing molecules where the Cl_3-C linkage is used. For example, either tri (trichloroethyl) or tri (trichlortert butyl) phosphate additives have shown high load-carrying capacity. Other chlorine-containing additives are chlorinated paraffin or petroleum waxes and hexachlorethene.

The phosphorus-containing compounds are perhaps the most commonly used additives for oils. Some aircraft lubricants have 3 to 5 percent tricresyl phosphate or tributyl phosphite as either an extreme-pressure or antiwear agent. Other phosphorous-containing extreme-pressure agents used in percentages of 0.1 to 2.0 could be dodecyl dihydrogen phosphate, diethyl-dibutyl-, or dicresyl-phenyl trichloroethyl phosphite and a phosphate ester containing a pentachlorophenyl radical. Most of the phosphorous compounds in oils also have other active elements.

The sulfur-containing extreme-pressure additives are believed to form iron sulfide films that prevent wear at high loads and speeds. However, they give higher friction coefficients and are therefore usually supplemented by other boundary-film-forming ingredients that reduce friction. The sulfur compounds should have controlled chemical activity (e.g., oils containing dibenzyl disulfide of 0.1 or more percent). Other sulfur-containing extreme-pressure additives are diamyl disulfide, dilauryl disulfide, sulfurized oleic acid and sperm oil mixtures, and dibutylxanthic acid disulfide.

Lead soaps have been used in lubricants for many years. They resist the sliding action in bearings and help prevent corrosion of steel in the presence of water. Some of the lead soaps used in lubricants are lead oleate, lead fishate, lead-12-hydroxystearate, and lead naphthenate. Lead naphthenate is used most often used because of its solubility. Lead soaps are used in concentrations of 5 to 30 percent.

Other additive compounds contain combinations of these elements. Most extreme-pressure lubricants contain more than one extreme-pressure additive. Needless to say, the selection of a proper extreme-pressure additive is a complicated process. The word "susceptibility" is frequently used with reference to additives in oils to indicate the ability of the oil to accept the additive without deleterious effects. Such properties as solubility, volatility, stability, compatibility, load-carrying capacity, and cost must be considered. Many oil compounds depend on the use of proprietary, or package, extreme-pressure additives. As a result, the lubricant manufacturer does not evaluate

the additives' effectiveness. Because of this, any selection of extreme-pressure additives should be supported by an evaluation program to determine their effectiveness for a given application.

CONCLUSION

The selection of a lubricant for a rolling-element bearing application is as important as the actual bearing design. In fact, good engineering practice dictates that both the design of the bearing and lubricant selection be integrated. Lubricant type should be selected based upon lubricant temperature limitations. Mineral oil type lubricants should be selected over the synthetic lubricants where temperatures permit. Elastohydrodynamic (EHD) lubrication film thickness should be calculated. Effects of the EHD film on bearing life should be determined. Additive selection while not always specifiable, should be considered and test programs initiated where boundary lubrication is anticipated. Good rolling-element bearing lubrication practice is not "off-the-shelf" oil can application.

REFERENCES

1. Anderson, W.J.: Elastohydrodynamic Lubrication Theory as a Design Parameter for Rolling-Element Bearings. ASME Paper 70-DE-19, May 1970.

2. Anderson, W.J.; and Zaretsky, E.V.: Rolling-Element Bearings. Mach. Des., vol. 42, no. 15, June 18, 1970, pp. 21-37.

3. Bamberger, E.N., et. al.: Life Adjustment Factors for Ball and Roller Bearings - An Engineering Design Guide. ASME, 1971.

4. Beerbower, A.: Boundary Lubrication. GRU.1GBEN.72, Esso Research and Engineering Co., June 1972.

5. Borsoff, V.A.: Fundamentals of Gear Lubrication. Annual Rep., Shell Development Co., June 1955.

6. Borsoff, V.A.; and Lulwack, R.: Fundamentals of Gear Lubrication. Shell Development Co., June 1957.

7. Bowden, F.P.; and Tabor, D.: The Friction and Lubrication of Solids, Vol. 2, Clarendon Press, Oxford, 1964, p. 365.

8. Brewe, D.; and Hamrock, B.J.: Simplified Solution for Stresses and Deformations. J. Lubr. Technol., vol. 105, no. 2, Apr. 1983, pp. 171-177.

9. Buckley, D.H.: Tribology. Advanced Materials Technology, NASA CP-2251, C.P. Blankenship and L.A. Teichman, eds., 1982, pp. 391-409.

10. Coy, J.J.; Townsend, D.P.; and Zaretsky, E.V.: Gearing. Mechanical Design and Systems Handbook, H.A. Rothbart, ed., McGraw-Hill, NY, 1986, pp. 38.59-38.66.

11. Feir, R.S.: Chemistry in Concentrated-Conjunction Lubrication. Interdisciplinary Approach to the Lubrication of Concentrated Contacts, NASA SP-237, P.M. Ku, ed., 1970, pp. 489-527.

12. Godfrey, D.: Boundary Lubrication. Interdisciplinary Approach to Friction and Wear, NASA SP-181, P.M. Ku, ed., 1968, pp. 335-384.

13. Grubin, A.N.: Fundamentals of the Hydrodynamic Theory of Lubrication of Heavily Loaded Cylindrical Surfaces. Investigation of the Contact of Machine Components, Kh.F. Ketova, Ed., Translation of Russian Book No. 30, Central Scientific Institute for Technology and Mechanical Engineering, Moscow, 1949, Chapter 2. (Available from Department of Scientific and Industrial Research, Great Britain, Transl. CTS-235 and Special Libraries Association, Transl. R-3554.)

14. Hamrock, B.J.; and Anderson, W.J.: Rolling-Element Bearings. Mechanical Design and Systems Handbook, H.A. Rothbart, ed., McGraw Hill, NY, pp. 29-51-29.55.

15. Hamrock, B.J.; and Dowson, D.: Isothermal Elastohydrodynamic Lubrication of Point Contacts-Part III-Fully Flooded Results. J. Lubr. Technol., vol. 99, no. 2, Apr. 1977, pp. 264-276.

16. Hersey, M.D.: The Laws of Lubrication of Horizontal Journal Bearings. J. Wash. Acad. Sci., vol. 4, 1914, pp. 542-552.

17. Horlick, E.J.; and Thomas, D.E.: Recent Experiences in the Lubrication of Naval Gearing. Gear Lubrication Symposium, Institute of Petroleum, 1966.

18. Jones, W.R. Jr., et al.: Pressure-Viscosity Measurements for Several Lubricants to 5.5×10^8 Newtons per Square Meter (8×10^4 psi) and 149 °C (300 °F). ASLE Trans., vol. 18, no. 4, 1975, pp. 249-262.

19. Lowenthal, S.H.; and Zaretsky, E.V.: Traction Drives. Mechanical Design and Systems Handbook, H.A. Rothbart, ed., McGraw Hill, NY, 1986, pp. 34.7-34.9.

20. Present, D.L., et al.: Advanced Chemical Characterization and Physical Properties of Eleven Lubricants. (AFLRL-166, Army Fuels and Lubricants Research Lab) NASA CR-168187, 1983.

21. Stribeck, R.: Characteristics of Plain and Roller Bearings. VDI Z., vol. 46, 1902.

22. Townsend, D.P.; Zaretsky, E.V.; and Scibbe, H.W.: Lubricant and Additive Effects on Spur Gear Fatigue Life. J. Tribology, vol. 108, no. 3, July 1986, pp. 468-477.

23. Zaretsky, E.V.; and Anderson, W.J.: How to Use What We Know About EHD Lubrication. Mach. Des., vol. 40, no. 26, Nov. 7, 1968, pp. 167-173.

TABLE 1. - LUBRICANT

Type	Specification	Bulk temperature limit in air	
		°C	°F
Mineral oil	MIL-L-6081	93+	200+
Diester	MIL-L-7808	149+	300+
Type II ester	MIL-L-23699	218	425
Triester	MIL-L-9236B	218	425
Superrefined and synthetic mineral oils	----------	218	425
Fluorocarbon[a]	----------	288	550
Polyphenyl ether[a]	----------	315	600

[a]Not recommended.

TABLE 2. - GREASES

	Specification	Recommended temperature range, °F	General composition
Aircraft (high speed; ball and roller bearing)	MIL-G-23220	-40 to +400 -40 to 204	Thickening agent and fluorocarbon
Aircraft (synthetic; extreme pressure	MIL-G-23827	-100 to +250 -73 to 121	Thickening agent, low-temperature synthetic oils, or mixtures of EP additive
Aircraft (synthetic; molybdenum disulfide)	MIL-G-21164	-100 to +250 -73 to 121	Similar to MIL-G-23827 plus MoS_2
Aircraft (general purpose; wide temperature range)	MIL-G-81322	-65 to +350 -54 to 177	Thickening agent and synthetic hydrocarbon
Helicopter (oscillating bearing)	MIL-G-25537	-65 to 160 -54 to 71	Thickening agent and mineral oil
Plug valve (gasoline and oil resistant)	MIL-G-6032	+32 to +200 0 to 95	Thickening agent, vegetable oils, glycerols, polymers
Aircraft (fuel and oil resistant)	MIL-G-27617	-32 to +400 -1 to 204	Thickening agent and fluorocarbon or fluoro-silicone
Ball and roller bearing (extreme high temperature)	MIL-G-25013	100 to +450 -73 to 232	Thickening agent and

TABLE 3. - MINERAL OIL CLASSIFICATION AND COMPARATIVE VISCOSITIES

Category	SAE number	ASTM grade[a]	AGMA gear oil	Approximate viscosity cS	
				38 °C (100 °F)	99 °C (210 °F)
	---	32	---	2	---
	---	40	---	3-5.5	---
	---	60	---	8.5-12	---
	---	75	---	12-16	---
	---	105	---	19-24	---
	---	150	---	29-35	---
Extra light	---	215	---	4	---
	10W	----	1	45	4.2
	---	315	---	61-75	---
Light	20W	----	2	69	5.7
	---	465	---	90-110	---
Medium	30W	----	---	---------	10
	---	----	3	128	---
	---	700	---	130-166	---
Medium heavy	40	----	---	---------	13
	---	----	4	183	---
Heavy	50	----	---	---------	17
	---	1000	---	194-237	18
	---	----	5	---------	---
	---	1500	---	291-356	---
	---	2150	---	417-525	---
	---	----	6	---------	24
	140	----	---	---------	25
	---	3150	---	630-790	---
Super heavy	---	----	b7	---------	29
	---	4650	---	910-1120	---
	---	----	b8	---------	36
	250	----	---	---------	43
	---	----	b8A	---------	47
	---	7000	--	1370-1670	---
	---	----	9	---------	97
	---	----	10	---------	227
	---	----	11	---------	464

[a]Grade number is equivalent to average Saybolt Universal Viscosity (SUS) at °F (100 °F).
[b]Compounded with fatty oil.

TABLE 4. - PRESSURE-VISCOSITY COEFFICIENTS, α_p, FOR VARIOUS LUBRICANTS[a]

Type, specification	Pressure-viscosity coefficient, α_p, m^2/N, psi^{-1}		
	40 °C (104 °F)	100 °C (212 °F)	150 °C (302 °F)
Automatic transmission fluid (GM6137-M)	1.54×10^{-9} (1.06×10^{-4})	1.17×10^{-9} (0.81×10^{-4})	1.02×10^{-9} (0.70×10^{-4})
Superrefined mineral oil	2.5×10^{-9} (1.73×10^{-4})	1.54×10^{-9} (1.06×10^{-4})	1.27×10^{-9} (0.87×10^{-4})
Type II ester (MIL-L-23699)	1.24×10^{-9} (0.85×10^{-4})	0.99×10^{-9} (0.68×10^{-4})	0.87×10^{-9} (0.60×10^{-4})
Diester (Polyolester) (MIL-L-7808)	1.15×10^{-9} (0.79×10^{-4})	0.92×10^{-9} (0.63×10^{-4})	0.80×10^{-9} (0.55×10^{-4})
Synthetic hydrocarbon plus 20 percent polyolester (MIL-L-2104C, MIL-L-46152)	1.38×10^{-9} (0.95×10^{-4})	1.15×10^{-9} (0.79×10^{-4})	1.04×10^{-9} (0.72×10^{-4})
Synthetic hydrocarbon	1.77×10^{-9} (1.17×10^{-4})	1.51×10^{-9} (1.04×10^{-4})	1.09×10^{-9} (0.75×10^{-4})
Mineral oil (MIL-L-6081)	2.19×10^{-9} (1.51×10^{-4})	1.54×10^{-9} (1.06×10^{-4})	1.07×10^{-9} (0.74×10^{-4})

[a]The values given are representative values of α_p and may vary from batch to batch or from one lubricant brand to another.

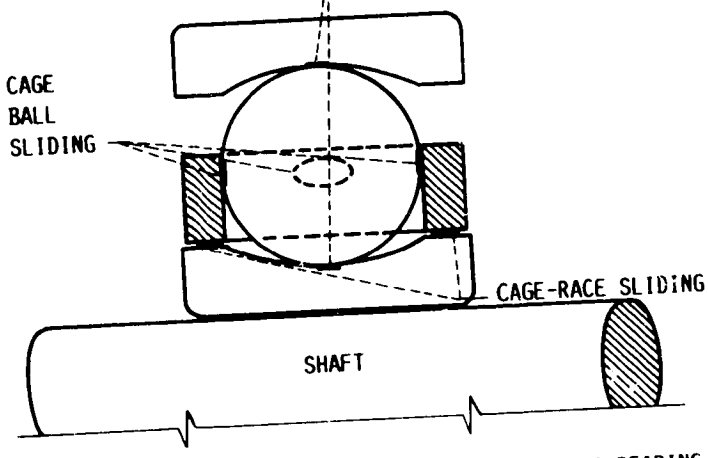

FIGURE 1.- REQUIRED POINTS OF LUBRICATION IN A BEARING.

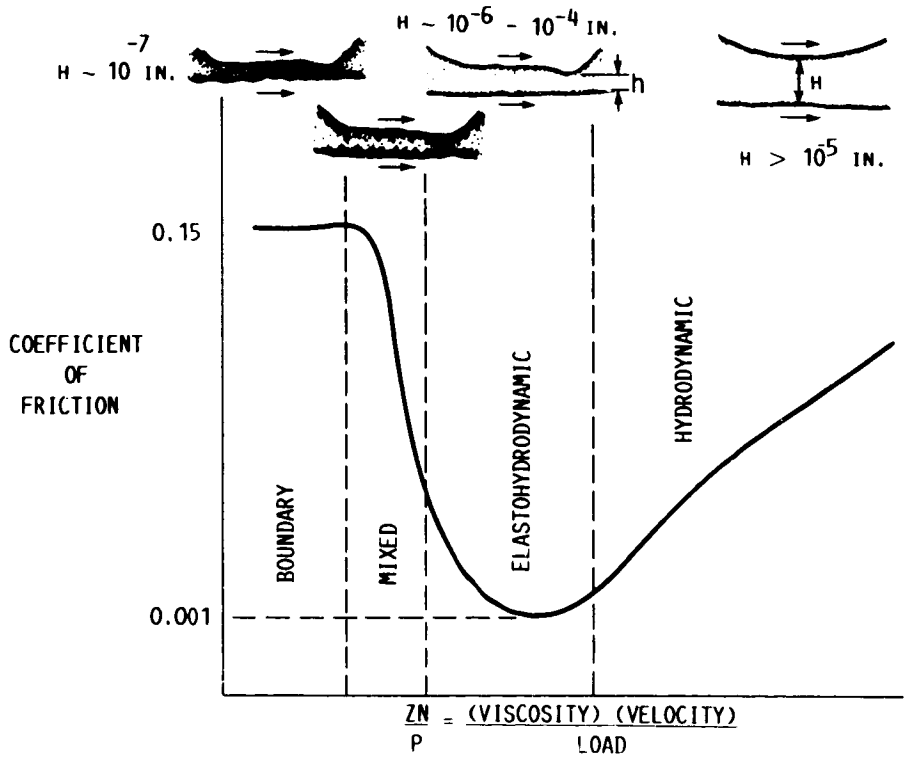

FIGURE 2.- COEFFICIENT OF FRICTION AS FUNCTION OF VISCOSITY-VELOCITY-LOAD PARAMETER (STRIBECK-HERSEY CURVE).

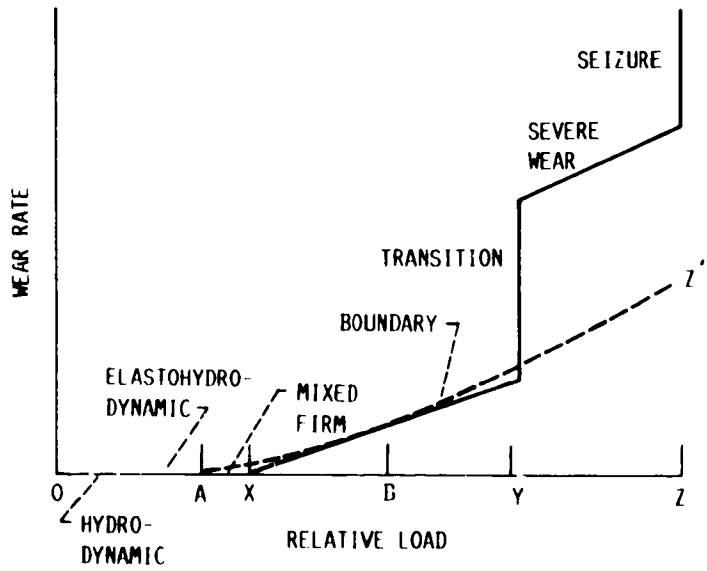

FIGURE 3.- WEAR RATE AS A FUNCTION OF RELATIVE LOAD DEPICTING VARIOUS REGIMES OF LUBRICATION.

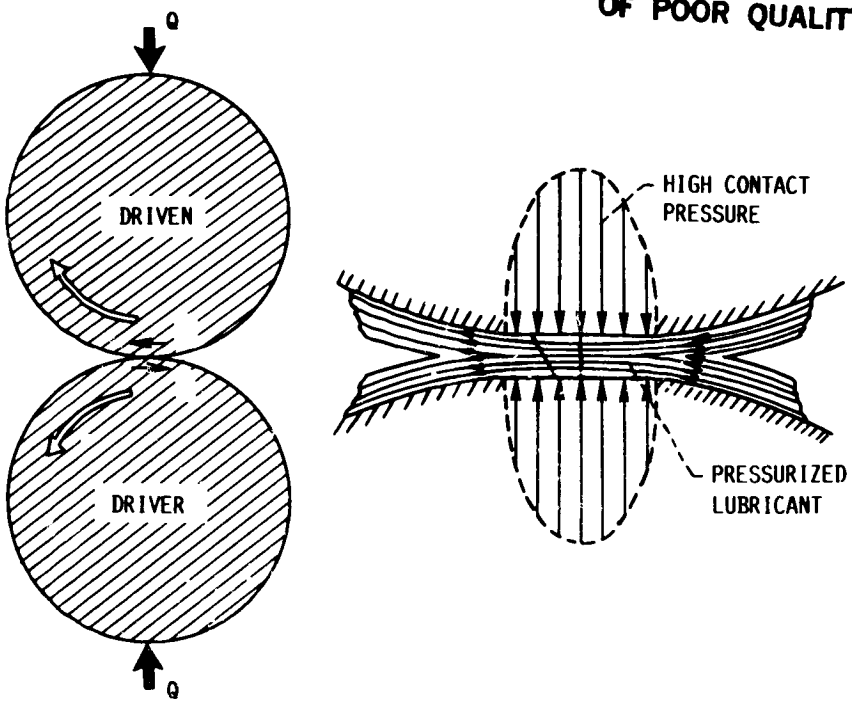

FIGURE 4.- ELASTOHYDRODYNAMIC FILM BETWEEN TWO BODIES IN ROLLING CONTACT.

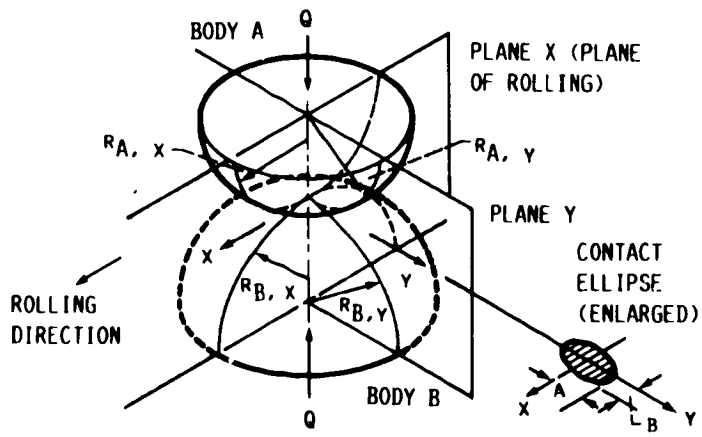

FIGURE 5.- GEOMETRY OF CONTACTING SOLID ELASTIC BODIES.

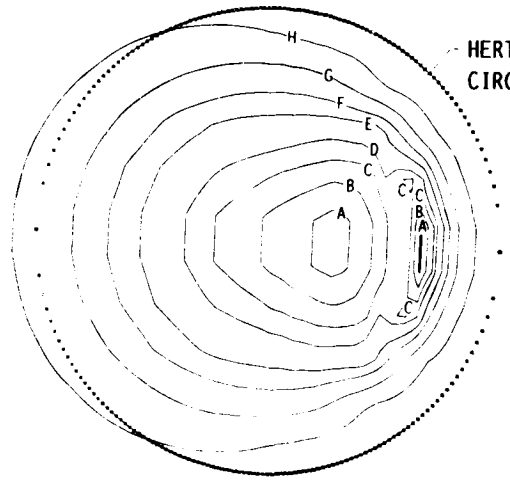

(A) PRESSURE.

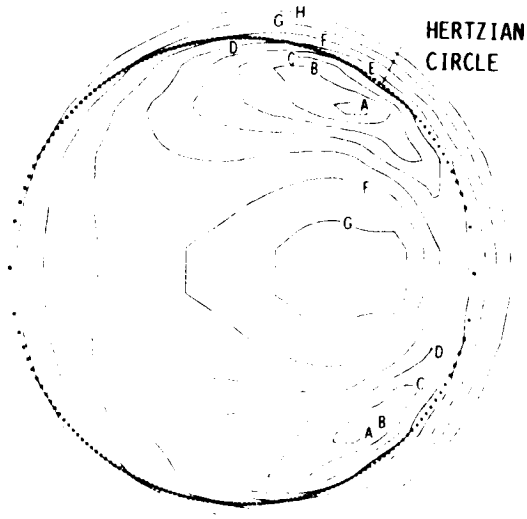

(B) FILM THICKNESS.

FIGURE 6.- CONTOUR PLOTS OF DIMENSIONLESS PRESSURE FILM THICKNESS. $k = 1.25$; $U = 0.168 \times 10^{-11}$; $W = 0.111 \times 10^{-6}$; $G = 4522$.

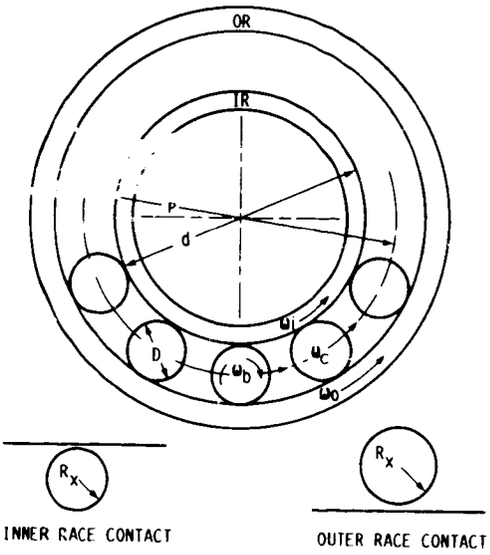

$$R_{xi} = \frac{D}{2(d + D)} \frac{D}{2} \left(1 - \frac{D}{P}\right) \qquad R_{xo} = \frac{D(d) + 2(D)}{2(d + D)} = \frac{D}{2} \left(1 + \frac{D}{P}\right)$$

(A) EQUIVALENT RADII FOR A ROLLER BEARING.

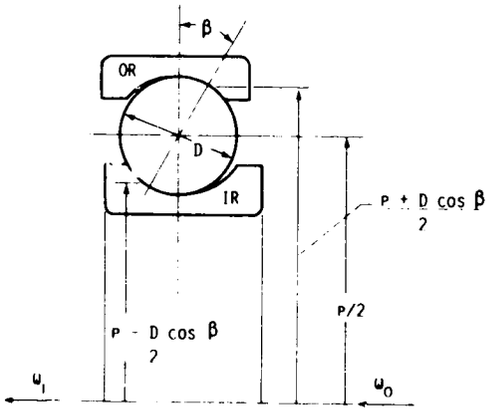

INNER RACE CONTACT OUTER RACE CONTACT

$$R_{xi} = \frac{D}{2P} (P - D \cos \beta) \qquad R_{xo} = \frac{D}{2P} (P + D \cos \beta)$$

$$R_{yi} = \frac{f_i D}{2f_i - 1} \qquad R_{yo} = \frac{f_o D}{2f_o - 1}$$

(B) EQUIVALENT RADII FOR A BALL BEARING.

FIGURE 7. GEOMETRY AND EQUIVALENT RADII FOR BALL AND ROLLER BEARINGS.

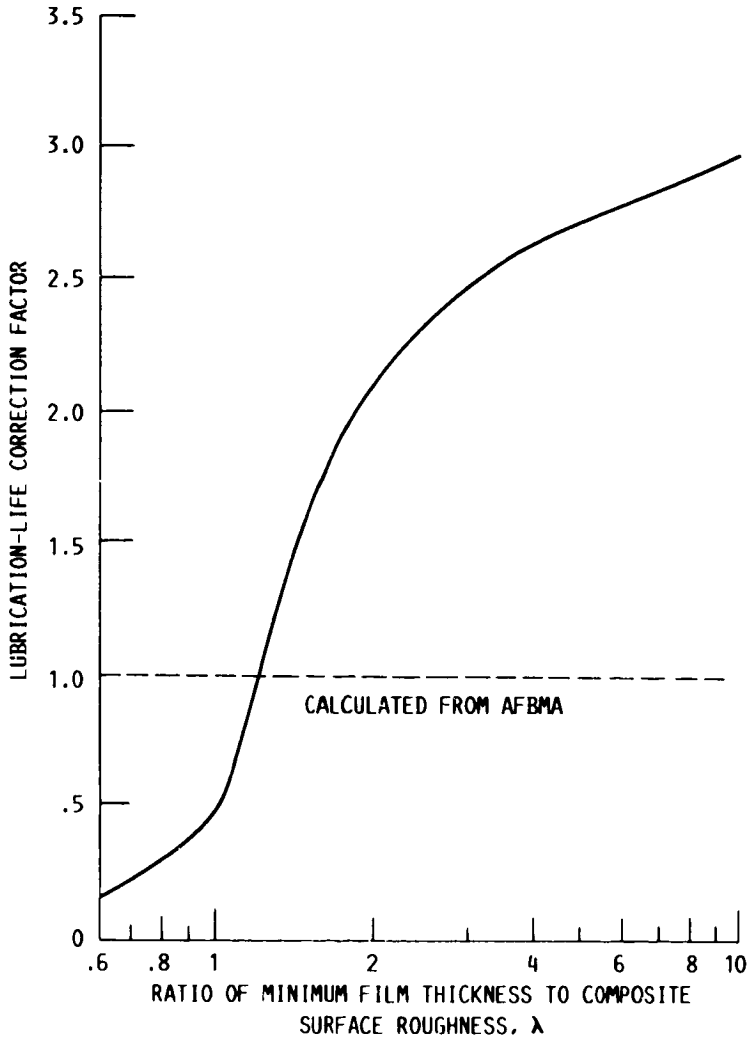

FIGURE 8.- LUBRICATION-LIFE CORRECTION FACTOR AS FUNCTION OF λ.

1. Report No.	2. Government Accession No.	3. Recipient's Catalog No.
NASA TM-88875		

4. Title and Subtitle	5. Report Date
Lubricant Effects on Bearing Life	
	6. Performing Organization Code: 505-63-11
7. Author(s): Erwin V. Zaretsky	8. Performing Organization Report No.: E-3253
	10. Work Unit No.
9. Performing Organization Name and Address: National Aeronautics and Space Administration, Lewis Research Center, Cleveland, Ohio 44135	11. Contract or Grant No.
	13. Type of Report and Period Covered: Technical Memorandum
12. Sponsoring Agency Name and Address: National Aeronautics and Space Administration, Washington, D.C. 20546	14. Sponsoring Agency Code

15. Supplementary Notes

Prepared for the OEM Design '86 Conference, New York, New York, December 9-11, 1986.

16. Abstract

Lubricant considerations for rolling-element bearings have within the last two decades taken on added importance in the design and operation of mechanical systems. The phenomenon which limits the usable life of bearings is rolling-element or surface pitting fatigue. The elastohydrodynamic (EHD) film thickness which separates the ball or roller surface from those of the raceways of the bearing directly affects bearing life. Chemical additives added to the lubricant can also significantly affect bearings life and reliability. The interaction of these physical and chemical effects is important to the design engineer and user of these systems. Design methods and lubricant selection for rolling-element bearings are presented and discussed.

17. Key Words (Suggested by Author(s))	18. Distribution Statement
Rolling-element bearings; Elastohydrodynamics; Lubrication; Rolling-element fatigue	Unclassified - unlimited STAR Category 37

19. Security Classif. (of this report)	20. Security Classif. (of this page)	21. No. of pages	22. Price*
Unclassified	Unclassified		

*For sale by the National Technical Information Service, Springfield, Virginia 22161