https://ntrs.nasa.gov/search.jsp?R=19890014644 2020-03-20T02:55:22+00:00Z

1987/88 Academic Year
Final Report

ADVANCED SPACE DESIGN PROGRAM

to the

Universities Space Research Association
and the
National Aeronautics and Space Administration

June 1988

By

Dr. Gale E. Nevill, Jr.

Department of Aerospace Engineering,
Mechanics and Engineering Science

University of Florida

Gainesville, FL 32611

(904) 392-0961

NGT-21-002-080

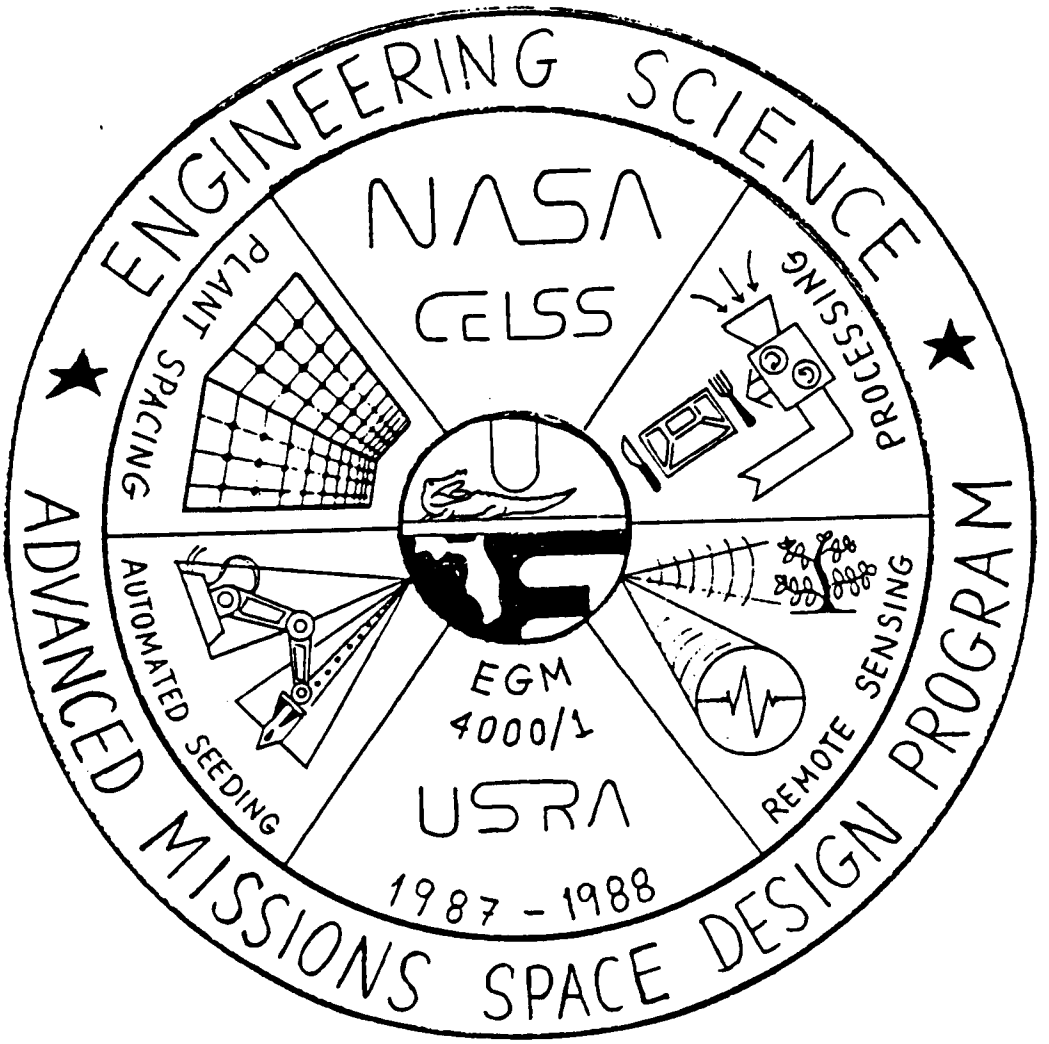
ENGINEERING SCIENCE
NASA
CELSS
PLANT SPACING
PROCESSING
AUTOMATED SEEDING
REMOTE SENSING
EGM
4000/1
USRA
1987 - 1988
ADVANCED MISSIONS SPACE DESIGN PROGRAM

ACKNOWLEDGEMENTS

The success of the 1987/88 Engineering Design course was due in considerable part to the contributions of Mr. Dennis Matthews, Mr. Bruce Larsen, Mr. Ralph Prince, Dr. William Knott and Dr. John Sager of NASA/KSC. In addition, Mr. Jack Sevier, Ms. Carol Hopf, Ms. Sue McCown and Ms. Barbara Rumbaugh of USRA and Mr. Stan Sadin and Ms. Elaine Schwartz of NASA/HQ gave valuable and much appreciated help. Finally, the excellent help of Mr. Jeff Bohren and Mr. Kent Tambling, the teaching assistants, is gratefully acknowledged.

TABLE OF CONTENTS

		Page
INTRODUCTION		1
DESIGN PROJECT DESCRIPTIONS		3
SUMMARY		5
APPENDIX A	EGM 4000 Class Report, Design of Components for Growing Higher Plants in Space, December 1987	
APPENDIX B	EGM 4001 Class Report, Design of Components for Growing Higher Plants in Space, May 1988	

INTRODUCTION

For a number of years the eight semester credit Engineering Design course, EGM 4000/4001, has been project oriented and taught by Dr. Gale E. Nevill, Jr. on a cooperative basis with representatives of industry and various government agencies and laboratories. For the past three years this course has been taught in cooperation with personnel from the NASA/KSC/CELSS project with support from a NASA/USRA Advanced Space Design Program grant.

Planning for this year's course took place in the spring and summer of 1987 with discussions between Dr. Nevill and Mr. Jeff Bohren of the University of Florida and Mr. Dennis Matthews, Mr. Ralph Prince, Dr. John Sager and Dr. William Knott of NASA/KSC.

The course began with a presentation to the class in Gainesville by Messrs. Matthews, Knott, Sager and Prince regarding the nature and needs of the NASA/KSC Controlled Environmental Life Support System(CELSS) program. Communication between class members and KSC personnel was maintained by frequent telephone contact and regular visits by KSC personnel to the University campus. In addition to the informal visits, KSC personnel also were present for formal oral presentations of achievements at the end of each semester.

Communication was also strengthened by a class visit to KSC in the Fall semester of 1987. This provided an opportunity for a general tour of KSC, for a more detailed familiarization with the

CELSS project and for personal meetings with several CELSS project personnel who had not been to campus.

During the first semester (EGM 4000) focus was on learning general principles and techniques of design, both through work on the main class project and a number of smaller "over the weekend" type projects. The instructor served as project leader during the very early part of the semester; later students served as project and group leaders on a rotating basis, thus giving all class members an opportunity for some leadership experience.

During the second semester (EGM 4001), focus was on learning to design, actually fabricate and test small components and subsystems, thus adding considerable realism to the students experience. The students were responsible for planning and managing each of the projects initiated and for making regular oral progress reports, submitting regular written progress reports, presenting a final oral briefing and preparation of a comprehensive final written project report. Also, during this semester, Mr. Bruce Larsen became the KSC principal administrative contact, replacing Mr. Dennis Matthews.

DESIGN PROJECT DESCRIPTIONS

During the first semester the class worked on the overall design of a regenerative system for growing higher plants in space during long duration missions. This work involved consideration of a wide range of technical problem areas ranging from microgravity fluid mechanics to plant disease detection. The first part of the semester student effort was concentrated on clarifying project requirements, on organizing and conducting the learning required by the project, and on identifying promising specific project areas. The class was then divided into four teams which explored and did preliminary studies on (1) variable plant spacing, (2) automated seed manipulation and planting, (3) plant health sensing, and (4) particle reduction in microgravity. The results of the first semesters work are presented in the EGM 4000 class final report, dated December 1987, titled "Design of Components for Growing Higher Plants in Space" which is included as Appendix A.

The work of the first semester clarified the four design problem areas and provided the basis for choosing projects for the second semester. For the second semester, three of these areas were selected as most promising for detail component design, prototype fabrication and testing. These were:

- automated seed manipulation and planting,
- plant health sensing, and
- particle reduction in microgravity.

The students were divided into three groups and each group created a detailed design of a component or subsystem to satisfy the stated need (in most cases created numerous designs), and built prototypes and tested them. The results of these efforts are described in the EGM 4001 class second semester report, dated May 1988, titled "Design of Components for Growing Higher Plants in Space" which is included as Appendix B.

SUMMARY

The 1987/88 EGM 4000/4001 Engineering Design course, with enthusiastic cooperation from NASA/KSC personnel and support from the USRA/University Advanced Space Design Program, was clearly successful. In this course the students were provided with a highly motivating opportunity for in-depth involvement in a real, complex and important design problem. They benefitted from extensive interaction with NASA professional and technical personnel and had opportunities to visit NASA Centers and broaden their technical and professional horizons. The students were able to develop a sound working knowledge of design principles and methodologies, gain project organization and leadership experience under realistic conditions, develop skills at oral presentation and report writing and learn about the realities of trying to actually fabricate a working prototype of a design. Finally, they were able to obtain the maturity, self-confidence and satisfaction of doing professional level technical work.

NASA also is believed to have benefitted significantly from this cooperative venture, by the strengthening of the design capabilities of a number of promising students, by contact with and close knowledge of a number of potential professional employees and by the addition of numerous insights and novel design concepts relevant to the NASA/KSC/CELSS program.

Overall, this program is considered to have been highly successful, and well worth the resources invested in it.

APPENDIX A

EGM 4000 Class Report

Design of Components for Growing Higher Plants in Space

December 1987

DESIGN OF COMPONENTS FOR GROWING HIGHER PLANTS IN SPACE

Prepared for

National Aeronautics and Space Administration
Kennedy Space Center, Florida

Universities Space Research Association

December 1987

Prepared by

EGM 4000 Engineering Design

Engineering Science Department

University of Florida

Gainesville, Florida 32611
(904) 392-0961

Instructor

Dr. Gale E. Nevill, Jr.

EXECUTIVE SUMMARY

The goal of the Fall 1987 class of EGM 4000 was the investigation of engineering aspects contributing to the development of NASA's Controlled Ecological Life Support System (CELSS). The areas investigated were the geometry of plant growth chambers, automated seeding of plants, remote sensing of plant health, and processing of grain into edible forms.

The group investigating variable spacing of individual soybean plants designed growth trays consisting of three dimensional trapezoids arranged in a compact circular configuration. The plants will be in modules which provide both nutrient delivery and support, and whose spacing can vary with age of the plants.

The automated seed manipulation and planting group investigated the electrical and mechanical properties of wheat seeds and developed three seeding concepts based upon these properties. The techniques proposed use electrical induction of charges on the seeds, pressure differences between the inside and outside of a closed container, and a combination of centrifugal force, friction, and air flow.

The plant health and disease sensing group developed a list of reliable plant health indicators and investigated potential detection technologies. Methods that satisfied the criteria for being plant health sensors are stimulus response monitoring, video image processing, and chlorophyll level detection.

The group investigating the processing of grain in microgravity devised two possible systems for the transportation, grinding, and conversion into food of wheat.

These designs will be built and tested in the following semester.

ACKNOWLEDGEMENTS

The EGM 4000 Engineering Design class expresses its sincerest gratitude in acknowledging the following persons for the guidance and expertise that each one has lent to the final report.

Rick Drum, Plant Manager, Bay State Milling, Indiantown, Florida.

Doug Bonebrake, Mother Earth Family Market.

Dr. David Jenkins, Department of Engineering Sciences, University of Florida.

Dr Robert Bates, Department of Food Science and Human Nutrition, University of Florida.

Alex Clem, Physics Assistant, Department of Physics, University of Florida.

Dr. Lawrance Shaw, Department of Agricultural Engineering, University of Florida.

The members of the EGM 4000 Engineering Design Class appreciate the cooperation of the National Aeronautics and Space Administration, particularly the following persons:

Dr. William Knott
Mr. Ralph Prince
Mr. Dennis Matthews

In addition, the supporting grant from the Universities Space Research Association is appreciated.

The excellent assistance of Jeff Bohren and Kent Tambling is heartily appreciated.

Finally, special thanks to Dr. Gale Nevill, Jr., for his support and guidance throughout the semester.

EGM 4000 Design Class

Jim Bledsoe
Vanessa Brandon
Ray Garcia
Javier Herrera
Scott Holcomb
Michelle Joslin
Paul Kelly
Colleen McKelvy
Ara Manukian
Lili Mateo
Scott Myers
Michael Pearce
Manny Rosendo
Herb Sivitz
Steph Syslo
Tracey Tubbs
Lee Weiss
David Wolsefer

Jeff Bohren
(Graduate Assistant)

Kent Tambling
(Teaching Assistant)

TABLE OF CONTENTS

Introduction.....6
Background.....6
Class Goals.....6
Class Organization.....7
Future Organization.....7
Report Structure.....8

Individual Group Reports.....9
Variable Plant Spacing.....9
Automated Seed Manipulation and Planting.....50
Plant Health Sensing.....82
Particle Reduction in Microgravity.....116

Overall Conclusion.....135

INTRODUCTION

Background

The EGM 4000 Design class of the University of Florida is working in conjunction with the National Aeronautics and Space Administration (NASA) and the Controlled Ecological Life Support System (CELSS) project at Kennedy Space Center (KSC) on aspects of a regenerative life support system to grow higher plants in space. This collaboration has been in effect for the past three years, and this report summarizes the design effort of the class during the Fall 1987 semester.

Class Goals

It was decided early on that in contrast to last year's work, in which the first semester was spent in overview development of the design of an integrated system, the goal of this semester was a quick move into the investigation of individual projects. A number of questions are of interest to NASA and the CELSS project. The areas included are seeding and automatic tissue culture, adaptable geometry growth chambers, monitoring (including the areas of leaf finding, non-destructive tissue analysis and leaf diagnosis, sensors and the associated automated sensor interpretation, followed by intelligent intervention and control), and maintenance (including renewable growth lights, heat and light pipes, food preparation and waste processing).

After discussions of the general design process, we developed the boundaries of the task domain. That process dealt with the conceptual cohesiveness of each organizational area. After discussions of the task domain, some promising areas were decided upon.

Class Organization

The timetable of organization was as follows:

August 25, 1987 - September 3, 1987: The emphasis was on discussion of the design process and problem definition, followed by problem decomposition into smaller areas.

September 8, 1987 - October 6, 1987: Five group topics were selected from the list generated by problem decomposition. The research group topics were: plant health sensing, expert systems, automatic seeder, food preparation, and variable geometry plant growth chambers. During this time, investigation of the technical content of these topics continued, with weekly reports of the progress of each group.

October 8, 1987 - December 10, 1987: Four topics were selected from the original five. It was decided that the expert systems research would not be pursued. Each group clarified their objectives, and continued gathering information about their topic. There were weekly intensive meetings with Dr. Nevill, and weekly reports to the class on the progress of each group.

Future Organization

Next semester the class will be divided into four research teams corresponding to the divisions at the end of the Fall semester. Their responsibility will be to continue on with the research with a strong emphasis on fabrication and testing of the systems described in this report.

Report Structure

The remainder of this report is divided into four sections comprised of the four group reports. Following this is the overall conclusions and recommendations of the class.

N89-24016

VARIABLE PLANT SPACING

Prepared by

Jim Bledsoe
Lee Weiss

Fall 1987

SUMMARY

The goal of this project was to develop a system for varying the spacings between soybean plants as they grow to maximize the number of plants grown in a given volume. The project was studied to aid in the development of NASA's Controlled Ecological Life Support System (CELSS). The resulting design consists of plant trays which are three dimensional trapezoids arranged into circles in a compact geometrical configuration. These circles are stacked together in back to back pairs to form a long cylinder. In each growth tray, plants will be housed in individual containers containing a nutrient delivery system and a plant support mechanism. Between the containers, a "half" trellis has been designed to space the plants for maximum space efficiency. The design allows for localized seeding and harvesting mechanisms due to the chambers' geometrical configuration. In addition, the components have been designed for ease of cleaning and minimal maintenance. Next semester, the individual components will be constructed and tested to determine the success of the design.

TABLE OF CONTENTS

INTRODUCTION.....13
Problem Definition.....13
Project Description.....13
Design Criteria.....13
Background Information.....14

CONCEPTS AND DESIGNS.....16
Geometrical Configurations.....16
Tray Shape.....16
Integration of Trays into Chamber.....16
Integration with Planting and Harvesting Systems...16
Plant Movement.....18
Varying Spacing During Growth.....18
Varying Row Spacing.....20
Plant Growth.....20
Nutrient Delivery.....22
Plant Support.....22
Cleaning and Maintenance.....23
Cleaning.....23
Maintenance.....24

RESULTS TO DATE.....25
Geometrical Configurations.....25
Tray Shape.....25
Integration of Growth Trays into Chamber.....25
Integration with Planting and Harvesting Systems...27
Plant Movement.....28
Varying Plant Spacing During Growth.....28
Varying Row Spacing.....28
Plant Growth.....28
Nutrient Delivery.....28
Plant Support.....29

Cleaning and Maintenance.....29
Cleaning.....29
Maintenance.....30

CONCLUSION.....31

PLANS FOR NEXT SEMESTER EFFORT.....32

REFERENCES.....33

APPENDIX A.....34
APPENDIX B.....47

INTRODUCTION

Problem Definition

Conservation of vehicle space is crucial since there is a limited volume available. Focusing on the space allotted for growing plants, research must be undertaken to develop a system to maximize the use of this space. Plants such as soybeans require less space to grow as a seedling than they do as a mature plant ready for harvesting. There is potential for utilizing this size difference as a foundation on which to conduct pertinent research in the area of optimizing plant spacing.

Project Description

The purpose of this project is to design and build a system for growing plants in space. This design will conserve space and maximize the number of plants per volume by spacing plants for maximum space efficiency. Preliminary investigations have been directed toward soybean plants since soybean plants require horizontal and vertical spacing unlike other crops like wheat which only require vertical spacing [7]. Results of a three dimensional space saving design are potentially more valuable than that of one or two dimensional design.

Design Criteria

Based on NASA's guidelines for research on CELSS [1], the following general design criteria have been established for this project:

1. There should be three dimensional plant spacing to minimize volume required for growing plants.
2. Production of soybeans should be continuous.
3. System weight should be minimized.

4. Nutrients must be contained and shielded from light.

5. The plants must be rigidly supported.

6. Air circulation must be provided from root to canopy.

7. Each plant must be provided adequate lighting.

8. Maximum utilization of automation should be used to minimize the duties of the crew.

9. Access to seeding and harvesting mechanisms should be incorporated into the design.

10. An automated system should be able to clean and reprocess the growth medium.

11. There should be a minimum of maintenance on components and any required maintenance should be capable of being performed by an automated system.

Some of the above criteria were considered more carefully than others. The primary criteria are:

1. There should be three dimensional plant spacing to minimize volume required for growing plants.

2. Nutrients must be contained and shielded from light.

3. The plants must be rigidly supported.

4. Maximum utilization of automation should be used to minimize the duties of the crew.

5. Access to seeding and harvesting mechanisms should be incorporated into the design.

6. An automated system should be able to clean and reprocess the growth medium.

Background Information

The design of an independent, self-sustaining plant growth chamber will become increasingly important to the future of food production. Its importance lies in the ability of a plant growth chamber to support human life in a wide variety of environments.

Plant growth chambers will realize their potential in manned, deep space exploration, where storage and weight restrictions necessitate the efficient production of food crops.

Plant growth systems have been previously created which incorporate hydroponics into the design to maximize production in a minimum of space [1,2,3,4,5]. Most of these designs that alter the spacing between plants during growth do not provide for expansion in more than one or two dimensions.

CONCEPTS AND DESIGNS

Geometrical Configurations

The initial stages of investigation involved examining existing systems for growing plants in space [1,2,3,4,5]. These were evaluated and used as references for preliminary designs.

Tray shape. In designing a tray to hold the plants, the approach taken was to custom fit a tray to the plants. This approach facilitates a better solution to the problem of tray shape than to fit plants to a tray. Due to the sigmoidal growth curve for soybean plants (Figure 1), the natural spacing of the rows would be in the shape of a sigmoid curve. As a result, the trays should be constructed into trapezoids along the horizontal and vertical planes approximating the sigmoid lines (Figure 2).

Integration of Growth Trays into Chambers. Simplified paper models of the trapezoidal shape were constructed and arranged like building blocks into many different configurations. These models helped visualize the three dimensional shape of the growth chamber.

Integration with Planting and Harvesting Systems. An automated process would be responsible for planting. Seeding would entail placing a germinated seed onto or into the support device where it would grow. The growth trays will be shaped and configured to allow the seeding mechanism to perform its task easily and as quickly as possible.

Likewise, the configuration of the plants in the tray must allow for the mature plants to be harvested without disturbing the other plants. Cutting the stem above the supporting mechanism would easily separate the canopy area from the root area. The edible portion would be transported to a processor to make food, and the cleaning system would remove the root portion.

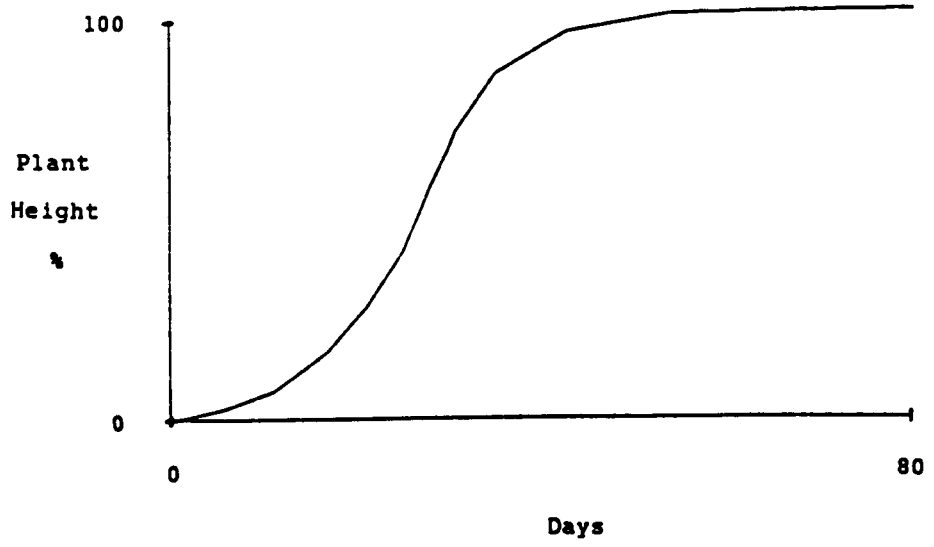

Figure 1. Soybean Growth Curve

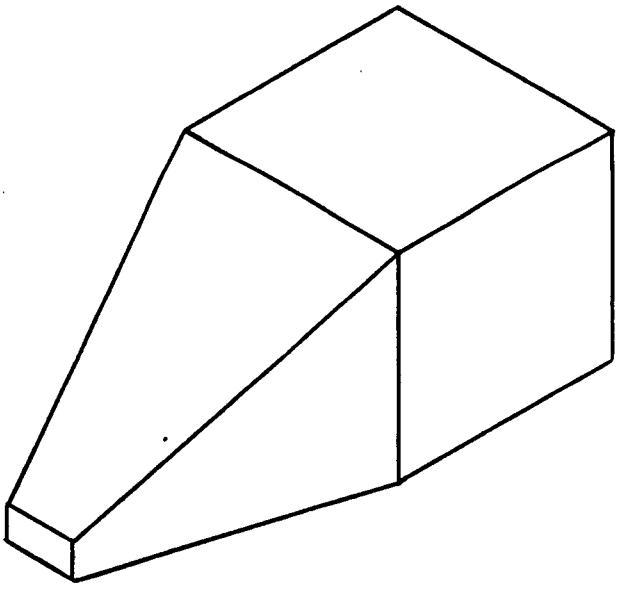

Figure 2. Trapezoidal Growth Tray

Plant Movement

Varying Plant Spacing During Growth. Varying the spacing of the plants is essential for conservation of space. One method developed was a mechanical "half" trellis (Figures 3a,3b). This trellis would support each individual plant in a separate container and would facilitate the independent movement of the plants. The trellises would provide stable, predictable expansion since they are constructed of rigid materials. Ends of the trellises will travel in tracks placed at the sides of the growth chamber. Nonlinear spacing of the plants is enhanced because as the trellis is expanded as it proceeds through the chamber, it also becomes thinner, providing movement perpendicular to the expansion of the trellis.

A computer program was written to animate the trellis design to help visualize how the individual plants would move as the trellises were expanded (Appendix A). The program enables the user to adjust the number of plants on a trellis, the number of trellises on a tray, and the maximum to minimum width ratio of the supporting track. The current version (V 1.0) of the program only allows for single step trapezoids, but later versions will allow two step trapezoids. Other future enhancements include having the program pack the rows together as closely as geometrically possible while evenly scaling the ages of the rows of plants. This will help determine the function required to move the endpoints of the trellises along the track.

An alternate system for plant spacing is an accordion tube. It is similar to a design referred to as an accordion tray [1]. The accordion tube system is simply a single row of plants on an expandible tube (Figure 4). By having single rows of plants, the tubes may be spaced separately and add another dimension of expansion over the existing method. The tube is a small hose which resembles a dryer hose. Holes for plant stems are placed at regular intervals along the tube.

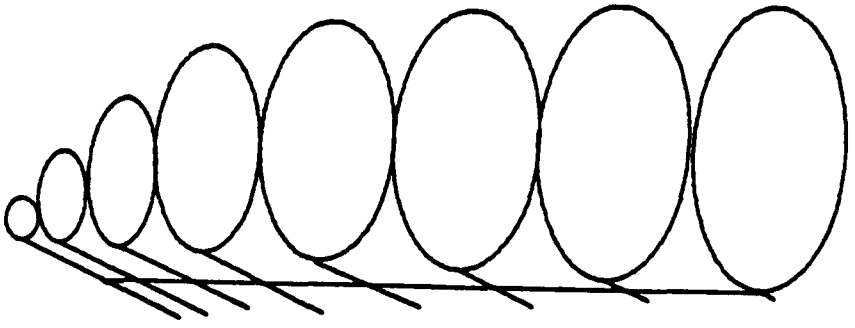

Figure 3a. Trellis Design - Side View

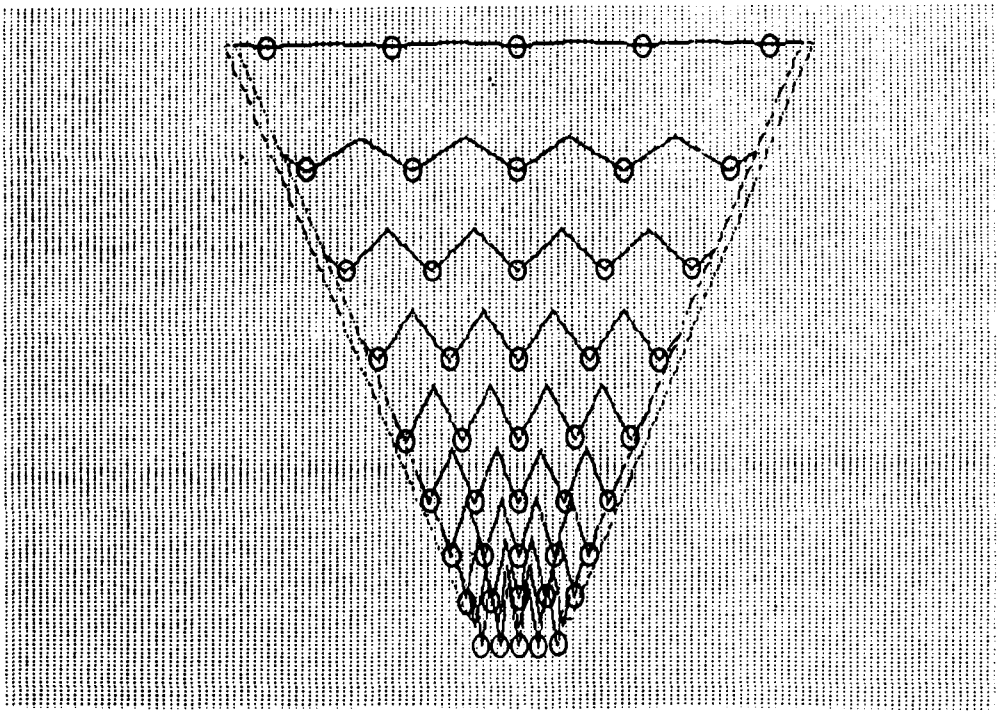

Figure 3. Computer Simulation of Trellis Support

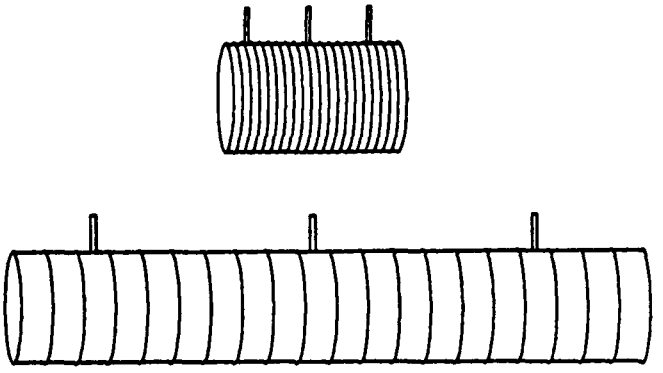

Figure 4. Accordian Tube System

Varying Row Spacing. There are several different methods for moving the rows of plants apart. The first is a simple motorized robot. Two linear stepper motors with simple grasping or pushing mechanisms would travel along the outside of the growth trays. The motors would be controlled by a computer. This system would be reprogrammable in mid flight.

A similar motorized system that is spaced by mechanical stops along a track instead of a computer was also studied. This system would not be adjustable once the track was constructed.

Another system involves having mechanical levers or linkages alter the space between rows in proportion to the amount that the rows are stretched [5]. This design is also non adjustable once it is constructed.

Plant Growth

Each plant could grow in containers that support individual plants or in large containers that support many plants. Regardless of the number of plants per container, the containers must provide nutrients, stem support, and a mechanism for plant spacing.

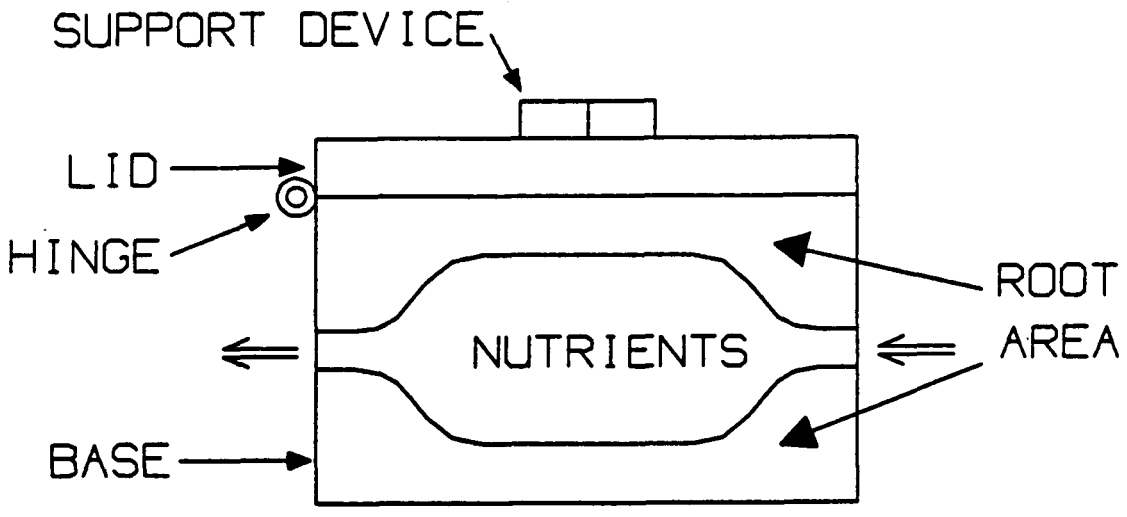

Figure 5a. Membrane Sac Delivery System

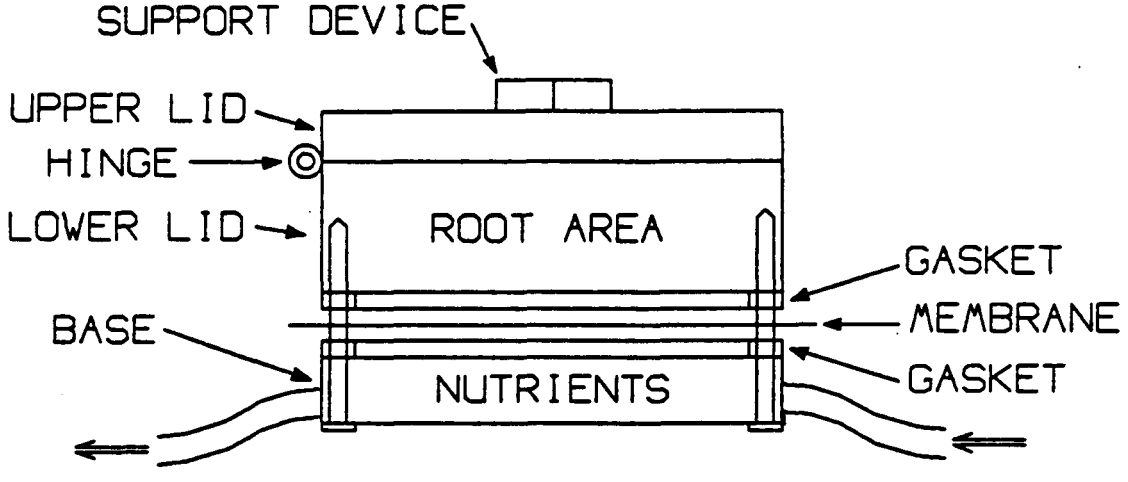

Figure 5b. Membrane Barrier Delivery System

Nutrient delivery. Two possible designs were developed for the nutrient delivery system: A membrane "sac" and a membrane barrier. The membrane "sac" is a membrane shaped into a tube; the ends of the tube serve as input and output locations for the nutrients (Figure 5a). The roots would grow around the membrane "sac" and would obtain the nutrient solution due to surface tension of the roots on the membrane and pressure differences between the atmosphere and the nutrient inside the membrane.

The membrane barrier design has a membrane stretched through the center of the plant container (Figure 5b). It separates the nutrient solution from the roots and provides a planar barrier as compared to the membrane "sac" which is cylindrical.

One drawback to both of these designs is that the container will be the same size for a seedling and a mature plant. There is a minimum root area that will support a mature plant. This area will limit the minimum size of the container and as a result, limit the ability to conserve space.

Plant support. Several different methods were developed for supporting the plants. They are: pneumatic donut, rubber diaphragm, and foam rubber. The pneumatic donut consists of an inflated circular tube shaped like a donut with the plant stem supported in the middle (Figure 6a). As the stem increases in thickness, the donut would slowly release air and decrease the pressure on the stem.

Each row of plants in this design must have a feedback mechanism to sense as well as vary the pressure in the donuts. Since the donut would be very difficult to manufacture with the resources available, this design was not tested.

The rubber diaphragm consists of four separate pieces of rubber sheeting with four equally spaced diametrical cuts in each piece. The four sheets are stacked on top of each other offset at 11.25 degrees (Figure 6b). This forms a very tight closure

around the opening. A model of the rubber diaphragm design was built from drafting film instead of rubber and was tested for its ability to support a wooden shaft.

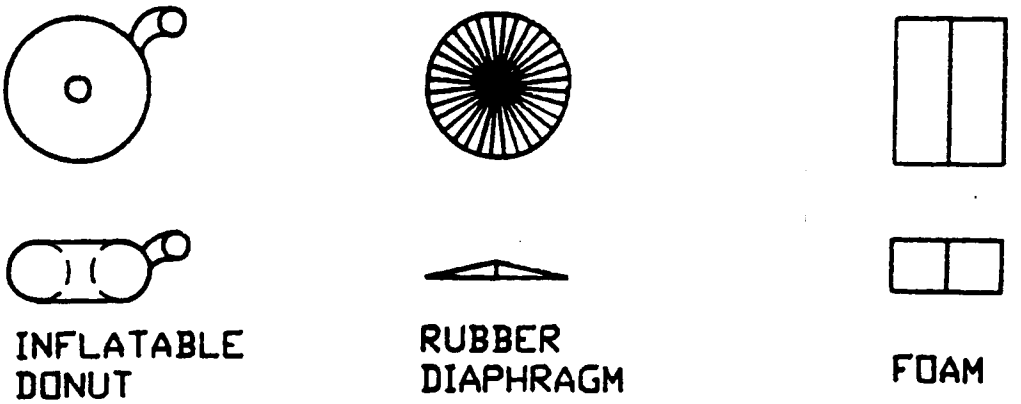

Figure 6. Plant Support Methods

The foam rubber design is very simple (Figure 6c). It consists of two rectangular pieces of foam placed over the opening of the container. The seed or stem would easily be held in place and would not constrict the stem. This design is very inexpensive, lightweight, simple to operate, has low maintenance, and simple to manufacture.

Cleaning and Maintenance

Cleaning. The independent plant containers would need to be refurbished before replanting soybeans in them. The optimal design would not interrupt the movement of the containers through the chamber but should allow the containers to be properly cleaned without removing them from the tray. The biomass in the container must be removed before the containers could be sterilized. This could be accomplished through an automated process where the containers could be opened and washed.

Maintenance. Since the duration of the proposed mission would be approximately three years [9], maintenance requirements are an essential aspect in the design of all components. All parts should be able to endure the entire mission or be serviceable in flight with a minimum of spare parts. Materials should be carefully selected because parts would be turning or sliding across each other or flexing repeatedly.

Any maintenance duties required would be performed by an automated system, or a crew member if only occasional light maintenance was required. The equipment needed for maintenance should be as small and light as possible.

RESULTS TO DATE

Geometrical Configurations

Tray Shape. In order to maximize space utilization, plants will be arranged in rows with equally aged plants in the same row and spacing will expand to follow the natural growth shape for the plants. The simplified shape is a trapezoidal shape approximating the sigmoid growth curve. When the plants are growing in the trays along each row, both the width and height will vary sigmoidally.

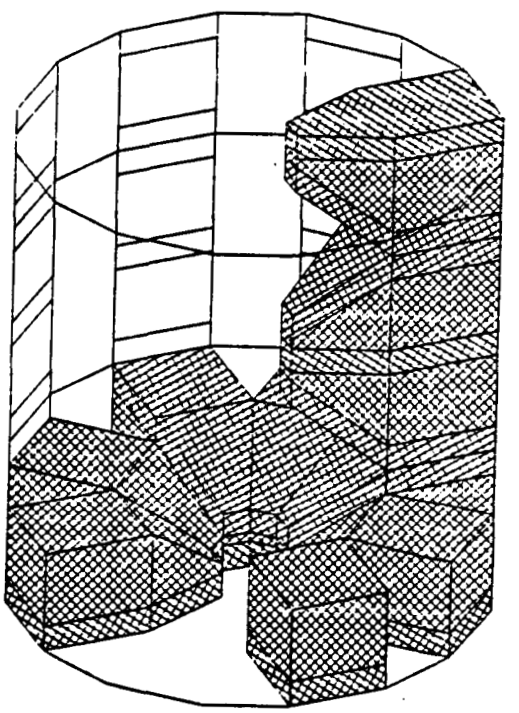

Figure 7. Cylindrical Growth Tray Arrangement

Integration of Growth Trays into Chamber. Through the design of paper models of the growth trays, the most efficient design consisted of trays arranged in a circles, two circles

placed back to back against each other, and circle pairs stacked on top of each other (Figure 7). This configuration forms a near perfect cylinder, which would be compatible with the space shuttle cargo bay [1].

This arrangement spaces the growth trays efficiently, but the overall cylinder has several empty spaces. One empty space occurs in the center of each circular pair of trays. In addition, triangular shaped empty spaces near the perimeter of the chamber were created that run uninterrupted for the entire length of the cylinder. There is also a cylindrical empty space that runs lengthwise in the chamber.

The efficiency of this configuration was calculated for a set of estimated values (Appendix B). The estimations and assumptions for the calculations were:

1. A mature soybean plant is 3 feet high and 1 foot wide.
2. A soybean plant reaches maturity height in 40 days and is harvested after 80 days.
3. A soybean plant will grow with roots contained to a volume of 3.5 x 3.5 x 3 to 4 inches deep.
4. Cylinder size inside diameter is 13 feet 8 inches [1].

Calculated volume of plant growth and support area took up 70.3% of the volume and the remaining 29.6% was empty space for equipment and storage. The total volume of one circle of trays and empty space was 1,054,000 in^3 and contained 168 plants. A control volume consisting of concentric circles of plants at maturity including lighting and support totalled 1,014,000 in^3 and contained only 142 plants. The volume per plant ratio for the plant area only decreased by 46% under the control configuration. Volume per plant ratio including support and lighting but without empty space was 38% less and 12% less when including empty space. This shows that space is conserved even under the worst case situation. A realistic value for space reduction is 38% when empty spaces are utilized for other purposes.

The empty spaces could be used in a number of ways. For example, the space in the center could be utilized for seeding equipment, storage, or any other equipment that would require a large unpartitioned space. Also, different crops could utilize some or all of these empty spaces. The triangular and cylindrical spaces running the length of the cylinder would be well suited for air ducts, nutrient tubing, electrical cables, or pathways for moving materials or allowing crew members to move between levels of circular trays.

Integration with Planting and Harvesting Systems. The support containers will be seeded in a row at one end of the tray. The seedling side of each tray forms a circle in the center of the chamber. The centralization of the containers to be seeded facilitates uncomplicated incorporation of the seeding mechanism into the chamber design.

A similar situation exists with the mature plants which are located at the perimeter of the growth chamber. This allows the harvester to move on a track along the outside of the trays to gather all the mature plants.

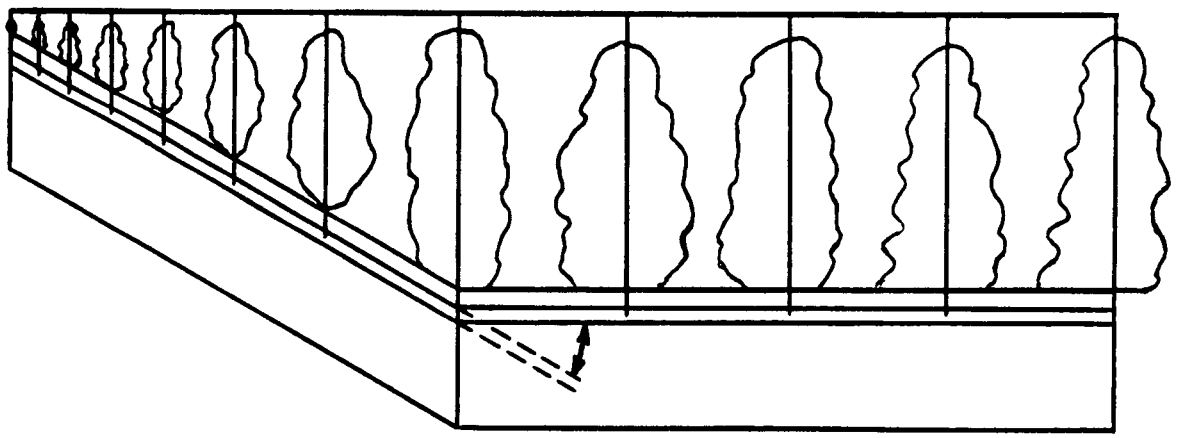

Figure 8. Plant Spacing During Growth

Plant Movement

Varying plant spacing during growth. Initial experiments showed that the trellis design will be able to perform the task of spacing the plants in rows quite efficiently. Problems arose when integrating the trellis design into the current tray and chamber configuration. The trellises must travel in a plane during the rapid growth stages and then shift to an intersecting plane (Figure 8). The trellises must travel across this discontinuity and still support the plants vertically.

The accordion tube has many flaws. One major drawback with the accordion tube design is the large expansion required. The hose must be able to expand at least four times its relaxed length to allow a plant 3 square inches to grow to 1 square foot [6]. This design would also be difficult to clean and reprocess because there would be no way to open the tube up for cleaning and successfully reseal it. For these reasons, the trellis design is preferred over the accordion tube.

Varying Row Spacing. The preferred method for varying the spacings between rows is using a limited robot system controlled by a computer. This is merely a conceptual design thus no further research will be performed in this area.

Plant Growth

Nutrient delivery. The membrane barrier was chosen as the preferred design for nutrient delivery. It is simpler to build and maintain than the membrane sac. The membrane barrier design facilitates removal of the plant roots from the container for cleaning without disturbing the membrane. Also, the membrane barrier lends itself to other potential designs. For example, the use of a more durable, porous metal such as stainless steel

could be developed as a barrier [5]. If the membrane should fail on one of the containers, provisions in the design have been made to allow replacement of the membrane.

Plant support. The rubber diaphragm model constructed proved to be successful in its primary goal of rigidly supporting the wooden shaft at all angles of rotation, but had undesirable side effects. One problem with this system is that the diaphragm cannot accept a seed very easily. The diaphragm provides support at a very thin ring around the stem or seed, and the seed would easily slip out if not placed exactly in the center. A seedling would adapt more easily since it would be less prone to slip out.

Another problem discovered while testing the model was that considerable force was exerted on the shaft. If this were a plant stem, the excessive force might injure the plant [8]. The force was not measured, nor is a value of maximum force allowable on a stem known, but because of this force, this design may not be investigated next semester.

The design offering the most promising results is the foam rubber technique. It is simple, easy to construct, and performs the task of supporting the plant early in the growth stage. As the plant becomes larger, the roots will slowly enlarge and completely fill the root area in the container. The roots will then support the plant as a normal plant would in soil. Because of the simplicity of the foam design, this will be the design that will be constructed and tested next semester.

Cleaning and Maintenance

Cleaning. The plant containers were designed with a hinged lid on the container for access to the roots left behind by the harvester (Figure 9). An automated process will open the containers while they are on the underside of each tray and remove the root masses. The containers will then be cleaned by chemical and physical means. A cleaning solution may be pumped

through the nutrient delivery system to cleanse the membranes. The cleaning portion of the design is conceptual and will not be constructed or tested.

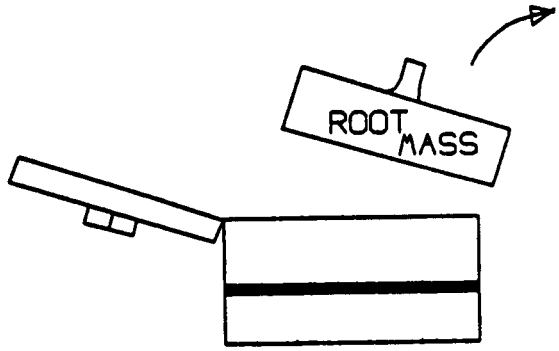

Figure 9. Cleaning of Plant Growth Containers

Maintenance. The plant containers were also designed to allow replacement of the membrane (Figure 5b). The membrane to be used is a plastic PVC based membrane that looks like paper [5]. The membranes should be able to perform for the entire length of the mission. If one should fail, the membranes are replaceable by crew or automation. Screws are removed from the bottom of the container, the base separated from the lower lid, and the membrane removed. A new membrane is slipped in place and the screws re-installed. A watertight seal is provided by rubber gaskets attached to the base and lower lid.

CONCLUSION

The designs presented constitute the components of a system for varying the spacings between soybean plants. The overall shape of the growth trays, as determined by the growth curve for soybeans, is a three dimensional trapezoid. These trays are arranged into pairs of circles back to back and stacked for the entire length of a large cylinder. Within the growth trays, plants will be housed in individual containers incorporating a nutrient delivery system and a plant support mechanism. Nutrients will be provided by a sheet of PVC membrane. The plants will be supported by being placed in between two pieces of foam. Individual containers will be spaced by a half trellis designed to vary the distance between plants for optimum volume usage. The design allows for localized seeding and harvesting mechanisms. In addition, the components have been designed for minimal maintenance and ease of cleaning.

Initial calculations from estimates on plant growth indicate that 38% less volume is required to grow a soybean plant using the tray and chamber configurations developed. This value is comparing the area required per plant in the trapezoidal configuration versus a cylinder housing concentric circles of plants.

PLANS FOR SECOND SEMESTER EFFORT

In the second semester, more data will be gathered in the area of soybean growth. More detailed data on the rate of growth at each stage of plant growth is required to quantitatively design a system for maximum efficiency to conserve space. Once detailed data is gathered and incorporated into the design, then a definite quantitative value of the efficiency may be calculated to determine the overall success of the project.

Also in the second semester, the trellis and membrane barrier designs will be constructed and tested. A test bed to hold the trellises has already been constructed. Modifications to the trellis design and other spacing methods such as the accordion tube will also be tested as well. A plant container will be constructed using the membrane barrier design. It will be tested with live plants to determine whether the roots will have enough area to grow in. If both of these systems succeed, then a final model will be built and retested.

REFERENCES

1. M. Oleson, R.L. Olson, Controlled Ecological Life Support System (CELSS) Conceptual Design Option Study, NASA Contract Report 177421, June 1986

2. R.P. Prince, J.W. Bartok Jr., Plant Spacing for Controlled Environment Plant Growth. Transactions of the ASAE, vol 21 [2]. p.332-336, 1978.

3. R.P. Prince, H.V. Koonz, Lettuce Production from a Systems Approach. ASAE.

4. R. Hinkle, T. Dreschel, The Tubular Membrane Growth System, Bionetics Corporation, August 1985.

5. Jeff Bohren, 1987, Personal Communication, University of Florida, Gainesville, Fl.

6. Ralph P. Prince, 1987, Personal Communication, Biomedical Operations and Research Office, J. F. Kennedy Space Center, Titusville, Fl.

7. Steph Syslo, 1987, Personal Communication, University of Florida, Gainesville, Fl.

8. Kent Tambling, 1987, Personal Communication, University of Florida, Gainesville, Fl.

9. 86-87 EGM 4000/1 Design Class, Final Report for the Advanced Space Design Program, p.3, 1987

APPENDIX A

Trellis Animation Program

The following is the listing for the trellis animation program. The program was written in C on an Amiga 1000 computer. The purpose of the program was to help visualize the effects of plant spacing for the half trellis design.

```
rm=75
include <intuition/intuition.h>
#include <graphics/display.h>
#include <graphics/gfxbase.h>
#include <graphics/gfxmacros.h>
#include <exec/memory.h>
#include <exec/execbase.h>
#include <stdio.h>
#include <hardware/custom.h>
#include <hardware/dmabits.h>
#include <libraries/dos.h>
#include <math.h>

/*
**********************************************************
**********
*
*  Simulations of support and expansion mechanisms.
*  Jim Bledsoe   Nov 1987   University of Florida  EGM
4000/1
*  For the NASA CELSS project and the USRA.
*
**********************************************************
********** */

extern void *OpenLibrary();
extern struct Screen *OpenScreen();
extern struct Window *OpenWindow();
extern struct IntuiMessage *GetMsg();
extern struct MsgPort *CreatePort();

#define IBPtr struct IntuitionBase *
#define GBPtr struct GfxBase *
#define OneHundred 100.0

#define ScreenX 640L
#define ScreenY 200L
#define ScreenMode HIRES   /*HIRES, INTERLACE, and
NULL*/

struct IntuitionBase *IntuitionBase;
struct GfxBase *GfxBase;
struct Window *w = NULL;
struct Screen *s = NULL;
struct ViewPort *vp = NULL;
struct RastPort *rp = NULL;
struct BitMap bmbuff;
struct RastPort rpbuff;
struct TmpRas tmpras;
UBYTE dobuffer[20] = "0";
UBYTE undobuffer[20] = "0";
struct IntuiText
t0,t1,t2,t3,t10,t11,t12,t20,t21,t22,t30,t31;
struct MenuItem
```

```
m0,m1,m2,m3,m10,m11,m12,m20,m21,m22,m30,m31;
struct Menu menu1,menu2,menu3,menu4,menustop;
PLANEPTR area_raster = NULL;
PLANEPTR area_raster2 = NULL;
LONG trayulx,trayuly,trayurx,trayury;
LONG trayllx,traylly,traylrx,traylry;
LONG xdiff,ydiff;
FLOAT mx,my;
USHORT animate_flag = FALSE;
USHORT done = FALSE;
USHORT gad_added = FALSE;
LONG num_segs,num_trels,max_stretch_angle,timeconst;
LONG num_divs;
FLOAT bar_length;
struct trellis {
  FLOAT Y;
  USHORT Visible;
  LONG PlantSize;
};
struct trellis trellarray[51];

struct StringInfo info = {
  dobuffer, undobuffer, 0,20,0, 0,0,0,0,0, 0,0, NULL
};

USHORT BorderVectors[] = {0,0,206,0,206,13,0,13,0,0};
struct Border gborder = {
  -2,-3, 3,0,JAM1, 5, BorderVectors, NULL
};

struct IntuiText gtext = {
  3,0,JAM2, 79,12, NULL,"Input window!!?!",NULL
};

struct Gadget gadget = {
  NULL, ScreenX/2-102,80, 203,10, GADGHCOMP,
  LONGINT | RELVERIFY | STRINGCENTER,
  STRGADGET, (APTR)&gborder, NULL, &gtext, 0,
(APTR)&info,1,NULL
};

struct NewScreen ns = {
  0, 0, ScreenX, ScreenY, 3, 5, 1, ScreenMode,
CUSTOMSCREEN, NULL,
  "Graphical simulation of a Trellis support.  V1.01",
NULL, NULL
};

struct NewWindow nw = {
  0, 2, ScreenX, ScreenY-2, 5, 1,
  MENUPICK | CLOSEWINDOW | GADGETUP,
  WINDOWCLOSE | WINDOWDEPTH | ACTIVATE | SMART_REFRESH,
  NULL, NULL, "Graphical simulation of Trellis support.
V1.01",
```

```
  NULL, NULL, 0, 0, ScreenX, ScreenY, CUSTOMSCREEN
};

/************************/

 animate() {
    register USHORT i,j;
    static LONG xl,xr,dy,y;
    static LONG sx,sy;
    static FLOAT yprop,x,ddx;
    SetRast(&rpbuff,0L);
    draw_tray();
    SetAPen(&rpbuff, 1L);
    for (i=0; i<num_trels; i++) {
      x = sqrt(trellarray[i].Y*OneHundred) +
timeconst/OneHundred;
      if (x > OneHundred) x -= OneHundred;
      trellarray[i].Y = x*x/OneHundred;  /*function of
movement*/
      yprop = trellarray[i].Y/OneHundred;
      xl = trayllx - (LONG)(xdiff*yprop);
      xr = traylrx + (LONG)(xdiff*yprop);
      y =  traylly - (LONG)(ydiff*yprop);
      ddx = (FLOAT)(xr - xl)/num_divs;
      dy = sqrt(bar_length*bar_length - ddx*ddx);
      Move(&rpbuff, (LONG)(xl*mx),(LONG)(y*my));
      for (j=1; j<num_segs; j++) {
        sx = xl + (1 + 2*(j-1))*ddx;
        sy = (j%2) ? y + dy : y - dy;
        Draw(&rpbuff, (LONG)(sx*mx),(LONG)(sy*my));
      }
      Draw(&rpbuff, (LONG)(xr*mx),(LONG)(y*my));
      Draw(&rpbuff, (LONG)(xl*mx),(LONG)(y*my));
    }
    ClipBlit(&rpbuff, 4,12, rp, 4,12,
ScreenX-8,ScreenY-14, 0xC0);
  }

  init_trellises() {
    register USHORT i;
    for (i=0; i<50; i++) {
      trellarray[i].Y = 0.0;
      trellarray[i].Visible = FALSE;
      trellarray[i].PlantSize = 10; /*not implemented
yet*/
    }
    for (i=0; i<num_trels; i++) {
      trellarray[i].Y =
OneHundred*i*i/num_trels/num_trels; /*function of
motion*/
      trellarray[i].Visible = TRUE;
      trellarray[i].PlantSize = 10; /*not implemented
yet*/
    }
```

```
  }

  get_input() {
    ULONG class,code,value;
    ULONG menu_num, item_num;
    struct Gadget *gadgptr;
    struct IntuiMessage *message;
    while((message=(struct IntuiMessage
*)GetMsg(w->UserPort))!=NULL) {
      class = message->Class;
      code = message->Code;
      if ((class == GADGETUP) || (class == GADGETDOWN))
{
        gadgptr = (struct Gadget *)message->IAddress;
        printf("Illegal!  there aren't supposed to be
any gadgets!!\n");
      }
      ReplyMsg(message);
      switch (class) {
        case CLOSEWINDOW:
          done = TRUE;
          break;
        case MENUPICK:
          menu_num = MENUNUM(code);
          item_num = ITEMNUM(code);
          if (menu_num==0) {
              switch (item_num) {
                case 0:
newmax:
                  value = prompt_mes("Enter new top
width (10-960)",
                      10,960,trayurx-trayulx);
                  if (value<traylrx-traylix) goto
newmax;
                  trayulx = 500 - value/2;
                  trayurx = 500 + value/2;
                  calc_consts();
                  break;
                case 1:
newmin:
                  value = prompt_mes("Enter new bottom
width (10-950)",
                      10,950,traylrx-traylix);
                  if (value>trayurx-trayulx) goto
newmin;
                  traylix = 500 - value/2;
                  traylrx = 500 + value/2;
                  calc_consts();
                  break;
                case 2:
                  value = prompt_mes("Enter new track
height(10-600)",
                      10,600,traylly-trayuly);
                  trayuly = 350 - value/2;
```

```
                    traylly = 350 + value/2;
                    trayury = trayuly;  traylry = traylly;
                    calc_consts();
                    break;
                  case 3:
                    value = prompt_mes("Enter adjustment
(+=up -=down  max 200)",
                        -200,200,0);
                    trayuly -= value;
                    traylly -= value;
                    trayury = trayuly;  traylry = traylly;
                    calc_consts();
                    break;
                  default:
                    printf("Illegal menu item number!\n");
                    break;
                } /*switch item_num*/
            }
            else if (menu_num==1) {
                switch (item_num) {
                  case 0:
                    num_segs = prompt_mes("Enter number of
trellis segments (1-100)",
                        1,100,num_segs);
                    calc_consts();
                    break;
                  case 1:
                    num_trels = prompt_mes("Enter number
of trellises (1-50)",
                        1,50,num_trels);
                    calc_consts();
                    break;
                  case 2:
                    max_stretch_angle = prompt_mes("Enter
max stretch angle (1-45)",
                        1,45,max_stretch_angle);
                    calc_consts();
                    break;
                  default:
                    printf("Illegal menu item number!\n");
                    break;
                } /*switch item_num*/
            }
            else if (menu_num==2) {
                switch (item_num) {
                  case 0:
                    timeconst = prompt_mes("Enter timing
constant (1-1000)",
                        1,1000,timeconst);
                    break;
                  case 1:
                    animate_flag = FALSE;
                    break;
                  case 2:
```

```
                    animate_flag = TRUE;
                    ClearMenuStrip(w);
                    SetMenuStrip(w,&menustop);
                    break;
                  default:
                    printf("Illegal menu item number!\n");
                    break;
                } /*switch item_num*/
            }
            else if (menu_num==3) {
                switch (item_num) {
                  case 0:
                    mx = (FLOAT)ScreenX/1000;  my =
(FLOAT)ScreenY/700;
                    m30.Flags = ITEMTEXT | HIGHCOMP |
ITEMENABLED | CHECKIT | CHECKED;
                    m31.Flags = ITEMTEXT | HIGHCOMP |
ITEMENABLED | CHECKIT;
                    SetRGB4(vp,  0L, 0L, 0L, 0L);
/*white*/
                    SetRGB4(vp,  1L, 15L, 15L, 15L);
/*white*/
                    SetRGB4(vp,  2L,  9L,  9L,  9L);
/*grey*/
                    SetRGB4(vp,  5L, 12L, 5L, 15L);
/*purple*/
                    break;
                  case 1:
                    mx = (FLOAT)ScreenX/955.55;  my =
(FLOAT)ScreenY/700;
                    m30.Flags = ITEMTEXT | HIGHCOMP |
ITEMENABLED | CHECKIT;
                    m31.Flags = ITEMTEXT | HIGHCOMP |
ITEMENABLED | CHECKIT | CHECKED;
                    SetRGB4(vp,  0L, 15L, 15L, 15L);
/*white*/
                    SetRGB4(vp,  2L,  0L,  0L,  0L);
/*grey*/
                    SetRGB4(vp,  5L, 15L, 15L, 15L);
/*purple*/
                    break;
                  default:
                    printf("Illegal menu item number!\n");
                    break;
                } /*switch item_num*/
            }
            else if (menu_num == 31) {
              animate_flag = FALSE;
              ClearMenuStrip(w);
              SetMenuStrip(w,&menu1);
            }
            else {
                printf("Illegal menu number!\n");
                break;
```

```
            } /*if menu_num*/
          default:
            break;
        } /*switch class*/
      } /*while message*/
    }

    LONG prompt_mes(string,min,max,current)
    LONG min,max,current;
    char string[]; {
      LONG value;
      ULONG class;
      struct IntuiMessage *message;
      ClearMenuStrip(w);
      ClipBlit(rp, 90,50, &rpbuff, 90,50, ScreenX-160,80,
0xC0);
      SetAPen(rp, 0);
      SetOPen(rp, 1);
      RectFill(rp, 100,60, ScreenX-100,120);
      SetAPen(rp, 1);
      gtext.IText = string;
      gtext.LeftEdge = 102 - 4*strlen(string);
      itoa(current,dobuffer);
      itoa(current,undobuffer);
      AddGadget(w, &gadget, 0);
      RefreshGadgets(&gadget,w,NULL);
      value = min-1;
      while (value<min || value>max) {
        class = NULL;
        while(class != GADGETUP) {
          message = (struct IntuiMessage
*)GetMsg(w->UserPort);
          class = message->Class;
        }
        value = atoi(dobuffer);
      }
      RemoveGadget(w, &gadget);
      ClipBlit(&rpbuff, 80,50, rp, 80,50, ScreenX-170,80,
0xC0);
      SetMenuStrip(w,&menu1);
      return(value);
    }

    itoa(n,s)
    char s[];
    LONG n; {
      SHORT i,sign;
      if ((sign=n)<0) n = -n;
      i = 0;
      do {
        s[i++] = n%10 + '0';
      } while ((n /= 10) > 0);
      if (sign<0) s[i++] = '-';
      s[i] = '\0';
```

```
    reverse(s);
  }

  reverse(s)
  char s[]; {
    SHORT c,i,j;
    for (i=0, j=strlen(s)-1; i<j; i++, j--) {
      c = s[i];
      s[i] = s[j];
      s[j] = c;
    }
  }


main () {
  USHORT i,j;
  IntuitionBase = (IBPtr)
OpenLibrary("intuition.library", 0L);
  GfxBase = (GBPtr) OpenLibrary("graphics.library", 0L);
  if (IntuitionBase && GfxBase) {
    if (nw.Screen = s = OpenScreen(&ns)) {
      if (!(w = OpenWindow(&nw))) {
        CloseScreen(s);
        goto out;
      }
    } else {   /*screen not opened*/
      goto out;
    }
    /*ShowTitle(s,1L);*/
    vp = &w->WScreen->ViewPort;  rp = &s->RastPort;
    InitBitMap(&bmbuff,3,ScreenX,ScreenY);
    for (i=0; i<3; i++) {
      if ((bmbuff.Planes[i] =
(PLANEPTR)AllocRaster(ScreenX,ScreenY))==NULL) {
        printf("Could not get video memory!!!
Grrrr!!!\n");
        if (i) {for (j=0; j<i; j++)
FreeRaster(bmbuff.Planes[j], ScreenX,ScreenY);}
        goto big_out;
      }
    }
    InitRastPort(&rpbuff);  rpbuff.BitMap = &bmbuff;
    set_color_registers();  set_menu();
    ScreenToFront(s);  SetMenuStrip(w,&menu1);
    init_vars();

    main_program();

    ClearMenuStrip(w);
    for (i=0; i<3; i++) FreeRaster(bmbuff.Planes[i],
ScreenX,ScreenY);
big_out:
    ScreenToBack(s);
    CloseWindow(w);  CloseScreen(s);
```

```
  }
out:
  if (GfxBase) CloseLibrary(GfxBase);
  if (IntuitionBase) CloseLibrary(IntuitionBase);
}

  set_color_registers() {
    SetRGB4(vp,  0L,  0L,  0L,  0L); /*black*/
    SetRGB4(vp,  1L, 15L, 15L, 15L); /*white*/
    SetRGB4(vp,  2L,  9L,  9L,  9L); /*grey*/
    SetRGB4(vp,  3L,  3L,  3L, 13L); /*blue*/
    SetRGB4(vp,  4L,  1L,  9L,  1L); /*green*/
    SetRGB4(vp,  5L, 12L,  5L, 15L); /*purple*/
    SetRGB4(vp,  6L, 15L, 14L,  0L); /*yellow*/
    SetRGB4(vp,  7L, 10L, 10L, 12L); /*silver*/
    SetDrMd(rp, JAM1);  SetAPen(rp, 1L);
    SetDrMd(&rpbuff, JAM1);  SetAPen(&rpbuff, 1L);
  }

  main_program() {
    while (!done) {
      if (animate_flag) animate();
      get_input();
    }
  }

  draw_tray() {
    SetAPen(&rpbuff, 2L);
    Move(&rpbuff,
(LONG)(trayulx*mx),(LONG)(trayuly*my));
    Draw(&rpbuff,
(LONG)((trayulx-10)*mx),(LONG)(trayuly*my));
    Draw(&rpbuff,
(LONG)((trayllx-10)*mx),(LONG)(traylly*my));
    Draw(&rpbuff,
(LONG)(trayllx*mx),(LONG)(traylly*my));
    Draw(&rpbuff,
(LONG)(trayulx*mx),(LONG)(trayuly*my));
    Move(&rpbuff,
(LONG)(trayurx*mx),(LONG)(trayury*my));
    Draw(&rpbuff,
(LONG)((trayurx+10)*mx),(LONG)(trayury*my));
    Draw(&rpbuff,
(LONG)((traylrx+10)*mx),(LONG)(traylry*my));
    Draw(&rpbuff,
(LONG)(traylrx*mx),(LONG)(traylry*my));
    Draw(&rpbuff,
(LONG)(trayurx*mx),(LONG)(trayury*my));
  }

  init_vars() {
    trayulx = 232;
    trayllx = 462;
    traylrx = 538;
```

```
    trayurx = 768;
    trayuly = 60;
    trayury = 60;
    traylly = 614;
    traylry = 614;
    num_segs = 6;
    num_trels = 7;
    max_stretch_angle = 5;
    timeconst = 50;
    mx = (FLOAT)ScreenX/1000;   my = (FLOAT)ScreenY/700;
    calc_consts();
  }

  calc_consts() {
    xdiff = traylLx - trayulx;
    ydiff = traylry - trayury;
    num_divs = 2 + 2*(num_segs - 2);
    bar_length =
(FLOAT)(trayulx-trayurx)/num_divs/cos(max_stretch_angle/
57.29578);
    init_trellises();
  }

  CreateMes(x,left,top,mesg)
  struct IntuiText *x;
  short left,top;
  UBYTE *mesg; {
    x->FrontPen = 0;   x->BackPen = 1;
    x->DrawMode = JAM1;
    x->LeftEdge = left;   x->TopEdge = top;
    x->ITextFont = NULL;
    x->IText = mesg;
    x->NextText = NULL;
  }

  CreateItem(name,item,next,left,top,flags)
  UBYTE *name;
  USHORT left,top;
  ULONG flags;
  struct MenuItem *item;
  struct MenuItem *next; {
    item->NextItem = next;
    item->LeftEdge = left;
    item->TopEdge = top;
    item->Width = 250;
    item->Height = 10;
    item->Flags = ITEMTEXT | HIGHCOMP | ITEMENABLED |
flags;
    item->MutualExclude = NULL;
    item->ItemFill = (APTR)name;
    item->SelectFill = NULL;
    item->Command = NULL;
    item->SubItem = NULL;
  }
```

```
  set_menu() {
    CreateMes(&t0, CHECKWIDTH+2, 1, "Alter max width");
    CreateItem(&t0, &m0, &m1, 5, 0, 0);
    CreateMes(&t1, CHECKWIDTH+2, 1, "Alter min width");
    CreateItem(&t1, &m1, &m2, 5, 10, 0);
    CreateMes(&t2, CHECKWIDTH+2, 1, "Alter height");
    CreateItem(&t2, &m2, &m3, 5, 20, 0);
    CreateMes(&t3, CHECKWIDTH+2, 1, "Shift vertically");
    CreateItem(&t3, &m3, NULL, 5, 30, 0);
    CreateMes(&t10, CHECKWIDTH+2, 1, "Alter num of
segments");
    CreateItem(&t10, &m10, &m11, 5, 0, 0);
    CreateMes(&t11, CHECKWIDTH+2, 1, "Alter num of
trellises");
    CreateItem(&t11, &m11, &m12, 5, 10, 0);
    CreateMes(&t12, CHECKWIDTH+2, 1, "Alter max stretch
angle");
    CreateItem(&t12, &m12, NULL, 5, 20, 0);
    CreateMes(&t20, CHECKWIDTH+2, 1, "Change speed");
    CreateItem(&t20, &m20, &m21, 5, 0, 0);
    CreateMes(&t21, CHECKWIDTH+2, 1, "Stop");
    CreateItem(&t21, &m21, &m22, 5, 10, 0);
    m21.Flags = ITEMTEXT | HIGHCOMP ;
    CreateMes(&t22, CHECKWIDTH+2, 1, "Start");
    CreateItem(&t22, &m22, NULL, 5, 20, 0);
    m22.Flags = ITEMTEXT | HIGHCOMP | ITEMENABLED |
CHECKIT | CHECKED;
    CreateMes(&t30, CHECKWIDTH+2, 1, "Set for screen");
    CreateItem(&t30, &m30, &m31, 5, 0, 0);
    m30.Flags = ITEMTEXT | HIGHCOMP | ITEMENABLED |
CHECKIT | CHECKED;
    CreateMes(&t31, CHECKWIDTH+2, 1, "set for printer");
    CreateItem(&t31, &m31, NULL, 5, 10, 0);
    m31.Flags = ITEMTEXT | HIGHCOMP | ITEMENABLED |
CHECKIT;
    menu1.NextMenu = &menu2;
    menu1.LeftEdge = 0;  menu1.TopEdge = 0;
    menu1.Width = 100;  menu1.Height = 100;
    menu1.Flags = MENUENABLED;
    menu1.MenuName = "Track";
    menu1.FirstItem = &m0;
    menu2.NextMenu = &menu3;
    menu2.LeftEdge = 100;  menu1.TopEdge = 0;
    menu2.Width = 100;  menu1.Height = 100;
    menu2.Flags = MENUENABLED;
    menu2.MenuName = "Trellis";
    menu2.FirstItem = &m10;
    menu3.NextMenu = &menu4;
    menu3.LeftEdge = 200;  menu1.TopEdge = 0;
    menu3.Width = 100;  menu1.Height = 100;
    menu3.Flags = MENUENABLED;
    menu3.MenuName = "Animation";
    menu3.FirstItem = &m20;
```

```
    menu4.NextMenu = NULL;
    menu4.LeftEdge = 300;  menu1.TopEdge = 0;
    menu4.Width = 100;  menu1.Height = 100;
    menu4.Flags = MENUENABLED;
    menu4.MenuName = "Aspect ratio";
    menu4.FirstItem = &m30;
    menustop.NextMenu = NULL;
    menustop.LeftEdge = 0;  menu1.TopEdge = 0;
    menustop.Width = ScreenX-2;  menu1.Height = 10;
    menustop.Flags = MENUENABLED;
    menustop.MenuName = "
Stop Animation!";
    menustop.FirstItem = NULL;
  }
```

APPENDIX B

Calculations of Volume and Efficiency of Trapezoidal Arrangement

The following is the derivation and results of the calculations for efficiency of the trapezoidal tray arrangement measured against mature plant spacing in concentric circles.

Results of Volume Calculations:

Unlabeled values are in cubic inches.

Mature height: 36 inches — Mature width: 12 inches
Cylinder diameter: 82 inches — Minimum width: 3.5125 inches

Area Description	Single Tray Volume	Percent of Total Volume	Eight Tray Volume
Plants	60,363	45.8	482,901
Lights	8,089	6.1	64,712
Support	24,267	18.4	194,135
Plants, lights and support	92,719	70.3	741,748
Triangular empty space	23,827	18.1	190,613
Central empty space	3,570	2.7	28,564
Torroidal empty space	11,598	8.8	92,784
Total empty space	38,995	29.6	311,961
Summed Total volume	131,714	99.9	1,053,709
Calculated Total volume	132,403	100.0	1,059,222
Cylinder volume	137,306	100.0	1,098,452
Control volume	137,306	100.0	1,098,452
Number of plants in trapezoid design	21		168
Number of plants in cylinder	17.75		142
Percent increase in number of plants			+18 %

Results of Efficiency Calculations (Figure 10):

Volume Description	Volume/Plant	% Difference
Plant volume for trapezoid	2,874	
Plant volume for control	5,355	
		-46 %
Plant, light, and tray volume for trapezoid	4,415	
Plant, light, and tray volume for control	7,141	
		-38 %
Total volume for trapezoid	6,272	
Total volume for control	7,141	
		-12 %

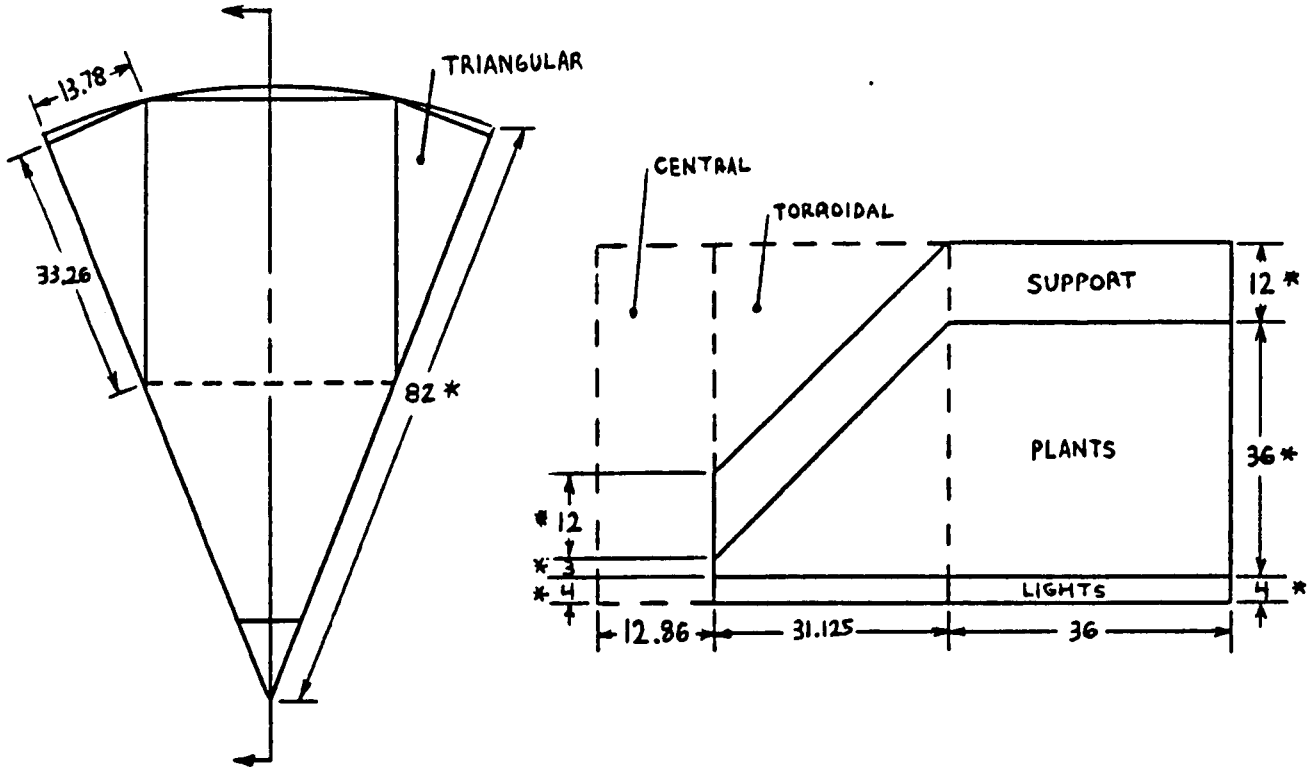

Trapezoidal

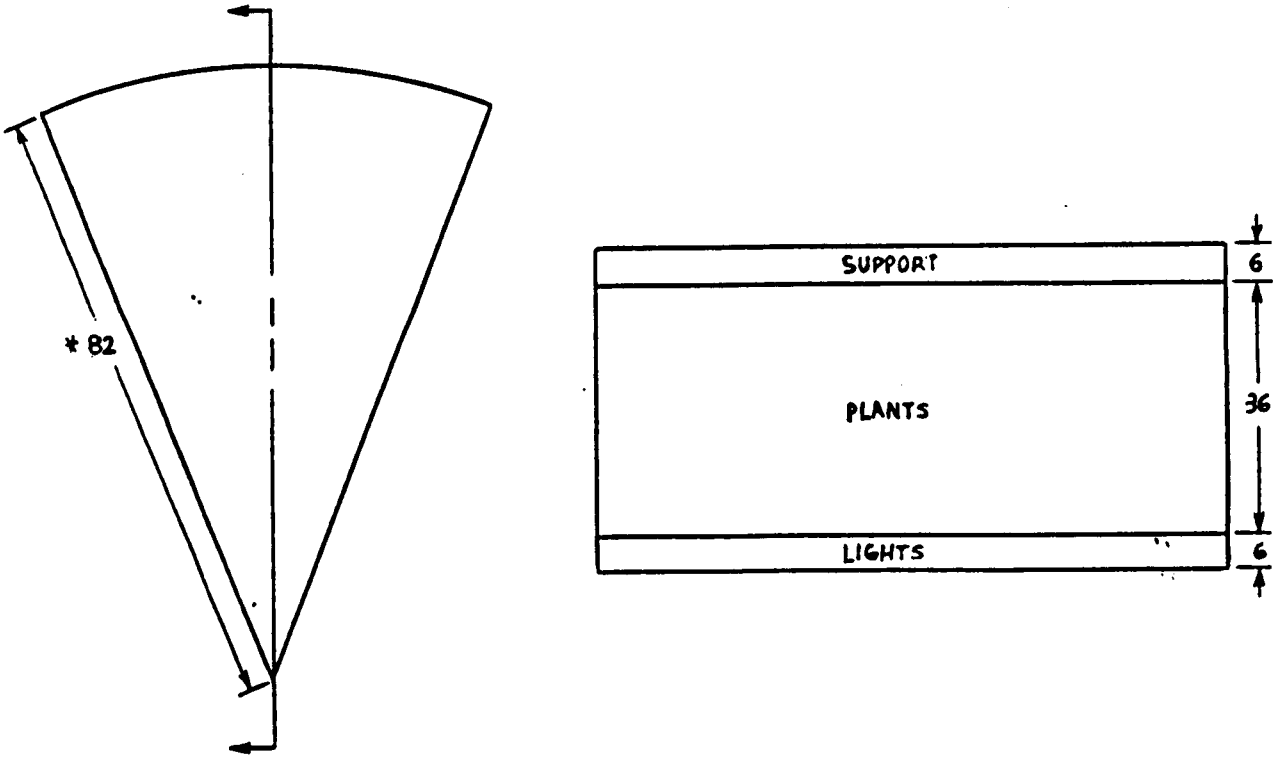

Cylindrical

Figure 10. Efficiency Calculations Diagrams

N89-24017

AUTOMATED SEED MANIPULATION AND PLANTING

Prepared by

Ray Garcia
Javier Herrera
Scott Holcomb
Paul Kelly
Scott Myers
Manny Rosendo
Herb Sivitz
Dave Wolsefer

Fall 1987

SUMMARY

The Automated Seed Manipulation and Planting Group was formed to develop a system for safe seed separation, acquisition, and planting operations for the Controlled Ecological Life Support System (CELSS) project currently underway at NASA's Kennedy Space Center.

Activities for the Fall Semester, 1987 focused on investigating the mechanical/electrical properties of wheat seeds and forming various Seed Planting System (SPS) concepts based on those properties. The Electrical Division of the design group was formed to devise an SPS using electrostatic charge fields for seeding operations. Experiments concerning seed separation using electrical induction (rearranging of the charges within the seed) were conducted with promising results. The seeds, when exposed to the high voltage and low current field produced by a Van de Graff generator, were observed to move back and forth between two electrodes. An SPS concept has been developed based on this phenomena, and will be developed throughout the Spring Semester, 1988. The Mechanical Division centered on SPS concepts involving valves, pumps, and fluids to separate and deliver seeds. An SPS idea utilizing the pressure difference caused by air as it rushes out of holes drilled in the wall of a closed container has been formulated and will be considered for future development. Also, a system of seed separation and delivery employing a combination of centrifugal force, friction, and air flow was considered.

Spring Semester, 1988 activities will include continued research in the area of electrical induction and the various mechanical seeders using air for seed separation/delivery. Two of the most promising concepts will be selected for construction.

TABLE OF CONTENTS

INTRODUCTION.....54
Problem Description.....54
Design Criteria.....55
Background Information.....56
Fall Semester Goals.....57

CONCEPTS AND DESIGNS.....59
Electrical Division.....59
Experiment 1.....59
Experiment 2.....60
Experiment 3.....62
Experiment 4.....62
Experiment 5.....63
Alternative Methods.....63
Experiment Applications.....63
Mechanical Division.....64
Minnow Bucket Seeder.....64
Experiment 6.....67
Experiment 7.....68
Experiment 8.....68
Experiment Applications (MBS).....69
Gear Effect Seeder.....71
Experiment 9.....73
Experiment 10.....73
Alternative Research.....74

RESULTS.....76
Electrical Division.....76
Mechanical Division.....76

PLANS FOR SPRING SEMESTER.....78
Electrical Division.....78
Mechanical Division.....78
Robotics Division.....78

REFERENCES.....79

APPENDIX A.....81

INTRODUCTION

Problem Definition

The ultimate goal of the Controlled Ecological Life Support System (CELSS) project is the construction of a self-contained bioregenerative life support module to provide nutrition for a permanent human presence in space. A critical element required in such a module will be a system to accomplish manipulation and planting of seeds that will be grown to provide food for the crew. This Seed Planting System (SPS) must operate automatically to reduce human involvement in the tedious operations to be described and to preserve probable cleanliness requirements for the growth chamber.

The first requirement for the SPS is the non-damaging separation of the seeds. The design group was instructed to consider the seeds to be stored so that they will be free to move within the container and not housed in individual storage cubicles. In this worst-case scenario, the formidable task of locating and acquiring individual seeds becomes obvious. Since the CELSS module will operate in the micro-gravity environment of space, any contact between a seed and a moving instrument will cause the seed to move away from the object to an undetermined location. As it moves, the seed may strike other seeds, eventually causing a rapid dispersion of seeds and thus making seed location and acquisition a difficult dynamic problem.

Once the seeds have been separated they must be planted. The SPS will safely transfer the seeds from the storage container and deposit them in the pre-determined locations in the growth tray. The ability to exactly plant seeds is necessary for the SPS so the seeds will be in position to receive the proper amounts of light and nutrients. Seeds placed at random in the growth tray are not guaranteed adequate light, nutrients, and space to grow and therefore are not likely to survive.

The SPS must also be capable of planting seeds at a rate sufficient to sustain the humans depending on CELSS. Considerations were made for the possibility that during CELSS module operation, all crops but one become contaminated and unusable. In this situation, the crew must depend solely on the remaining crop for nutrition. Calculations were completed based on the consumption rate necessary for sustenance on a sample crop (in this case, wheat) to determine a maximum planting rate capability for the SPS (Appendix A).

The decision whether to plant the seeds in a wet, germinated state or dry, non-germinated condition has not been definitely settled upon for CELSS. Planting a pre-germinated seed has the advantage of partially ensuring the successful maturation of the seed; however, the germinated seed is a very delicate living organism and extreme care must be taken during planting operations so as not to damage either the seed coat or emerging radical. Dry seeds are much more resistant to physical damage but planting dry seeds increases the possibility that non-viable seeds will take up valuable space in the growth tray. In view of these facts, the SPS should therefore be able to successfully operate and deliver seeds in either a wet or dry condition.

The topics discussed define the ares of major concern in designing an SPS for use in the CELSS module. The ideas and experiments to be presented in this report address these problems and solutions felt to be useful in our future work.

Design Criteria

1. The SPS should be constructed so any components including fluids be contained such that the integrity of the growth chamber is preserved.
2. Operations must be automated to minimize human involvement.
3. Seed storage containers must allow for freedom of movement of the seeds within the container. This is to demonstrate the worst possible case in which the seeds could be delivered to the SPS.

4. Any contact made with the seeds can not inflict damage which would cause the seeds to become non-viable in dry or wet planting.

5. The SPS will plant seeds in specific locations in the growth tray.

6. The ability to plant a specific rate of seeds to sustain human consumption needs.

Background Information

Initial study of possible EGM 4000 projects in support of CELSS was undertaken for the first four weeks of the Fall Semester, 1987. During this study phase, information regarding seed location and planting techniques were acquired to determine the feasibility of an EGM 4000 effort in this area. Indications were favorable for successful development of this project and therefore, the Automated Seed Manipulation and Planting project was chosen for continued research and development.

In order to facilitate research and streamline operations, the eight members of the design group divided themselves into three groups: the Mechanical Division (3 members), Electrical Division (3 members), and the Robotics Division (2 members). The Mechanical and Electrical Divisions were responsible for investigation, research, and development of an SPS concept falling within their areas of expertise. For instance, seed separation using an electric field would be researched by the Electrical Division. The Robotics Division served to investigate various robotic arms regarding price, availability, and usefulness and to support the other two groups should extra manpower be required.

To satisfy the requirements that the SPS be automatic and capable of exactly planting seeds, a robotic arm was felt to be necessary. Research by the Robotics Division focused on smaller, instructional robots to satisfy price and limited system familiarization time constraints; the bigger and more complex the robotic system, the more time required to master its control. It

was felt that the purpose of this course was to design an SPS, and to only use robotics as an aide to SPS. Therefore, relatively simple-to-operate robots were considered.

The robot chosen for our use is the Pro-Arm RS 2220 System built by Marcraft International Corporation, Kennewick, Washington. Although limited in payload capacity (1.1 lbs), it offers an easily mastered control system. Robotic control is accomplished via a direct computer interface with a personal computer. A purchase order for the Pro-Arm has been completed and the robot will be available for use during the Spring Semester, 1988.

Fall Semester Goals

When the seeder project was definitely decided upon as one of the class projects, specific goals for the Automated Seed Manipulation and Planting Group for the Fall Semester, 1987 were established. These goals are as follows:

1. Study Seed Properties - wheat was selected as a representative seed for study since wheat almost assuredly will fly on CELSS. Various experiments to determine electrical resistivity, density, and other properties were conducted to provide basic knowledge on the behavior of seeds in different conditions.
2. Fluid Behavior in micro-gravity - Since the CELSS module will operate in the space environment, the SPS designed must function properly in micro-gravity. Any SPS employing fluids must be designed with the consideration that fluid behavior differs markedly in micro-gravity.
3. Design Catalog - Any and all SPS ideas, whether they prove realistic or not, were included in a design catalog for reference purposes. This was done to keep all ideas in a central location so group members who wish to modify or experiment with SPS ideas would have easy access to those ideas.
4. Robotic Familiarization - Once the Pro-Arm had been ordered, the Robotics Division sought to obtain as much hands-on experience with a Pro-Arm as possible. The Industrial and Systems Engineering Department (ISE) at the University of Florida is currently using this particular robotic system and graciously allowed the use of their system for practice purposes.

5. Construction and Testing - In order to test the feasibility of SPS concepts, small scale models of seeder components were constructed whenever possible. This was done to insure the SPS was based on sound principles and work was not being wasted on an unprofitable design.

CONCEPTS AND DESIGNS

Electrical Division

The electrical division of the seeder group was formed to explore the possibilities of using electrical methods in the separation, movement, and manipulation of seeds in order to construct an efficient seeding system. The considered design specifications included maintaining seed viability, preserving design simplicity, while retaining system safety. The ultimate goal of the system is to plant sufficient seeds to maintain a crew of astronauts for space flights of long duration. Therefore, the application of our final design to a microgravity environment must be considered.

The initial experiments enabled us to determine the electrical properties of wheat seeds, in order to incorporate them into our design specifications. The first property of interest was the electrical resistivity. This would determine the availability of free charge on the seed, which in turn determines the action of electric forces on the seeds.

Experiment 1. This experiment consisted of applying a voltage to a single wheat seed and monitoring the amount of current that flowed through the seed. According to Ohm's Law, the resistivity is inversely proportional to the current and directly proportional to the applied voltage. A potential of 310 volts was applied to the seed, generating a 2 microampere current. The resistance was calculated to be 155 megohms.

From the experiment above, it was concluded that the seed was a poor conductor. Therefore, direct charging of the seed would be difficult. However, there may be possible a method of inducing a dipole on the seed [1], or coating the seed with a charged chemical.

The impetus of our next investigation came from a common physics experiment [2]. In order to show the presence of an

electric field, small grass seeds were placed between two charged electrodes. The seeds aligned themselves along the electric field lines created by the electrodes (Figure 1). This alignment occurred because the subatomic positive charges on the seed were drawn to the negative electrode, while the corresponding negative charges on the seed were drawn to the positive electrode, inducing an electric dipole. The electric field between the two electrodes provided the energy to overcome the strong forces within the seed that hold the oppositely charged particles together. This process of rearranging charge is called electric induction [3].

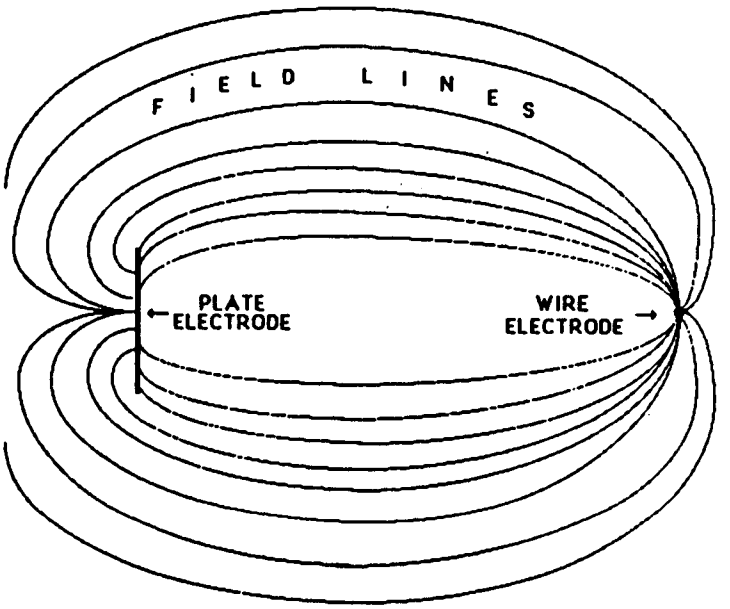

Figure 1. Electric Field Lines

Experiment 2. In this experiment wheat seeds were placed in a plexiglass container with 1/4 of an inch of water. A wire electrode was placed at one end of the container and a plate electrode was placed at the other end (Figure 2). The experiment was conducted with the electrodes placed in the water, as well as raised over the water. Next, we connected a Van de Graff static

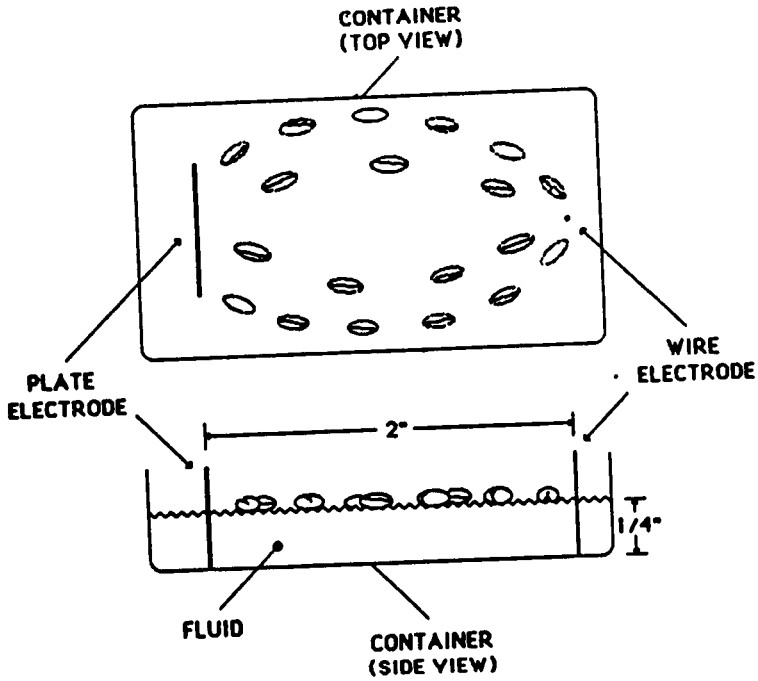

Figure 2. Seeds in Electric Field

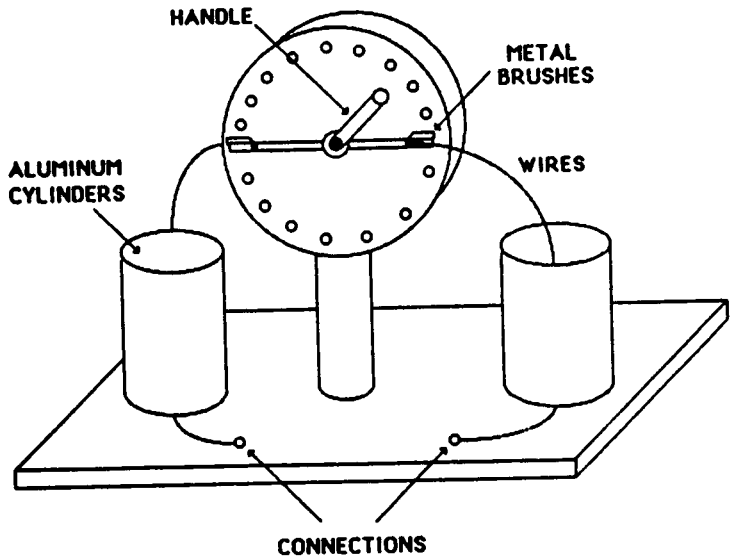

Figure 3. Van de Graff Static Generator

charge generator (Figure 3) to the electrodes. This generator was used to put a large amount of charge onto the electrodes. This generator is fairly safe, because even though a large voltage was applied between the electrodes, a very small current (microamperes) was obtained.

During this experiment, no seed movement was detected. Also, there was no charge build up on the electrodes. The reason for the lack of movement is that water is a good conductor, and the charge placed on the electrodes was dissipated through the water medium. Therefore, there was no electric field and no induced dipoles.

Experiment 3. In this experiment the processes of experiment 1 were followed, except that transformer oil was used as the liquid medium. Transformer oil was used because it has a lower conductivity than water, thus allowing the charge to build up on the plates, and not be conducted from one electrode to the other by the liquid medium.

In this experiment, a large amount of charge was built up on the electrodes, and the electric field remained constant. The seeds lined up in the direction of the electric field, which had induced dipoles on the seeds. The concentration of charge on one end of the seed (dipole) was either attracted or repelled by the closest electrode. The seeds moved toward the electrode. When a seed came into contact with the electrode, the greater amount of charge on the electrode neutralized the dipole, then flooded the seed with charge. Then the seed was repelled by the like charge of the electrode. The seed moved rapidly away from the electrode towards the oppositely charged electrode.

Experiment 4. The next experiment followed the same process as the previous experiment, except that air was used as a medium. In order to minimize the mechanical resistance, the seed was suspended in the air by a lightweight cord, and placed between the two electrodes.

The seed swung towards the closest electrode. Also, using air as a medium solved the main problems of maintaining seed health, while having sufficient resistance to impede electric charge flow. Air is not damaging to the seeds, and also has a low conductivity.

Experiment 5. In this experiment, we continued to explore the use of air as a medium. The seeds were placed on the bottom of the container, and the same process was employed.

This experiment produced the best results. The seeds moved almost as well as in the transformer oil, because air also has a low conductivity. Air also has less possible side effects than the transformer oil.

Alternative Methods. Certain organic molecules carry a natural charge. This charge can be bonded to the seeds, and then moved to an electrode carrying the opposite charge. The first of these molecules to be investigated is poly-L-lysine, a polymeric amino acid. This molecule sticks to surfaces and possesses positive charges. Poly-L-lysine is also relatively inert and therefore will not adversely affect the subsequent growth of the plant. The other molecules are prosthetic groups on which can be attached metal ions such as ferrous (iron atom with a +2 charge) ions. The disadvantage of using metal ions is that they may interfere with electron transport in the plants metabolism. By charging seeds with chemicals their relative motion in an electric field can be better predicted. Unfortunately, a large concentration of these chemicals must be used in order to give a seed a charge strong enough to actually move it. Future experiments should indicate the feasibility of this technique.

Experiment Applications. One possible application using the process of induction to solve the problem of seed separation (figure 4). An insulating sheet is placed across the plate electrode, and a system of open grooves is constructed at the end

of the container. These grooves will be large enough to fit one seed. When an electric field is applied, the seeds will move toward the plate electrode, through the grooves and into a final seed delivery system. With this procedure, the seeds would be separated, and ready for planting.

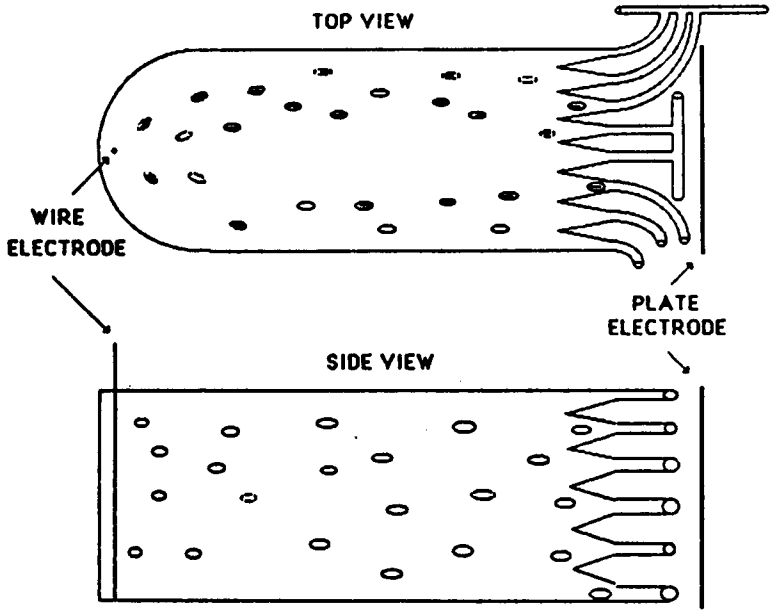

Figure 4. Electric Field Seed Separator

Mechanical Division

Minnow Bucket Seeder. The minnow bucket seeder is closely related in design and theory to a farming seeder from International Harvester used to plant corn seeds [4]. The International Harvester Corporation received their design idea from two farmers. The original idea occurred when the two farmers went fishing and used a minnow bucket to hold the live bait. The farmers noticed that the live bait would get stuck to the holes of the bucket when the bucket was lifted out of the lake. This was due to the force of water inside the bucket

trying to escape through the holes. They also noticed that when they placed their finger over a hole, the fish would swim away. This occurred because a pressure difference over the hole no longer exists. The minnow bucket seeder (MBS) is simply a closed container with holes about one-tenth the size of a seed and a blower supplying air into the container to increase the pressure. The pressure difference acts as an attractive force to keep seeds over the holes. The advantages of the MBS are that it can single seeds out with relative accuracy and quickness, the concept is easy to understand, and the MBS is reasonably compact.

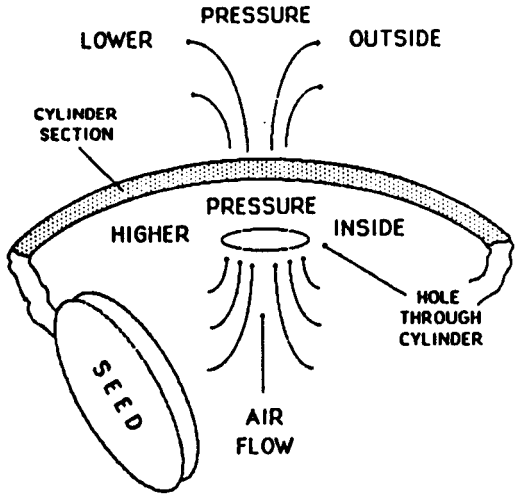

Figure 5. Pressure Gradient for Seed Movement

The theory behind the MBS follows the idea that when a pressure difference appears, the flow of the medium will be toward the lower pressure (Figure 5). For example, squeezing a balloon with a hole in it forces the air inside to rush out through the hole unless one covers the hole with his finger. The MBS applies this pressure difference idea to hold a seed to the wall of the container where a hole has been drilled. The inside of the closed container has air blown into it to cause a pressure increase. The only escape for the increased air pressure is

through the holes used to capture the seeds. When a seed is agitated near a hole, the pressure difference will cause the seed to become trapped on the hole. If one puts his finger over the hole, the seed will no longer be attracted to the hole because the pressure difference is not present. Therefore, the seed will fall due to the lack of force to keep it in place. One can use this method to accurately single seeds out and locate them reliably.

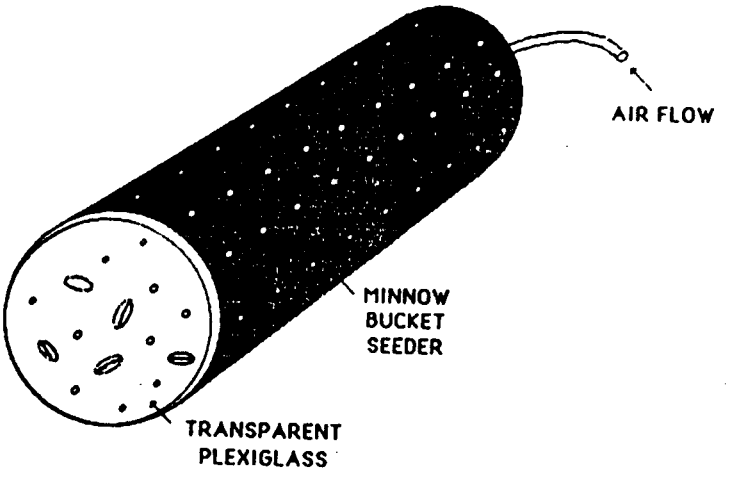

Figure 6. MBS Design

The container design consists of a six inch diameter and fourteen inch long PVC tube (Figure 6). One end of the container has a plexiglass lid to allow observation inside the container. The other end is sealed with a lid which has an aperture for the blown air to enter. Rows of seed capture holes have been drilled approximately two inches apart around the container. Each row consists of five seed capture holes equally spaced along the length of the container. The seed capture holes are approximately one-tenth the size of a wheat seed to ensure that a seed will not get sucked through a hole. If more holes are drilled the container can operate with more seeds, should the need arise.

Experiment 6. (Air MBS) The first MBS experiment consisted of simply observing the effects and efficiency of the seed capture holes obtaining seeds. Dry seeds were placed inside the MBS and the air pressure was supplied into the container via the aperture on the lid. The container was rotated in order to place the seeds over the seed capture holes. Seeds which passed directly over a hole got stuck to it due to the pressure difference as discussed earlier. The cylinder was rotated a full 360 degrees and no seeds fell. The only way a seed would fall would be if a hole were blocked from outside the cylinder. Occasionally a hole would attract two seeds; this problem could be eliminated by drilling smaller seed capture holes.

In conclusion, the first experiment provided excellent results. The only inconvenience encountered was that the seed must pass directly over the hole in order for the pressure difference to attract the seed and hold it on the hole. More experiments will be done in order to obtain more information on this system.

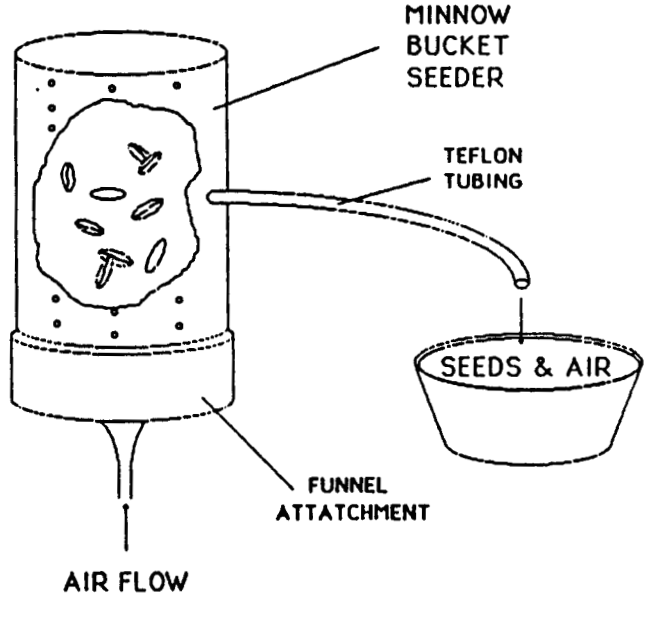

Figure 7. MBS Seed Transport Experiment

Experiment 7. (MBS seed transport) For this experiment a hole large enough for a polyethylene tube to be inserted was drilled (Figure 7). The tube to be inserted had sufficient size to allow seeds to travel easily within the tube. A large number (3000) of dry wheat seeds were placed into the MBS and the tube was inserted into the side of the MBS with approximately three inches of its length penetrating into the MBS. The MBS was rotated to a vertical position (plexiglass window on top) and high pressure air hooked up to the opposite end to vigorously agitate the seeds. Seeds successfully entered the tube and passed to an outside container, but at a variable rate and spacing.

The experiment was successful at acquiring seeds and transporting them via polyethylene tubing. However, the random rate and spacing at which the seeds exited the MBS proved to be unacceptable. If more experiments are to be attempted with this seed transport method, a way to effectively control seed flow is needed. The efficiency of this method decreases when few seeds remain because of the low probability of capturing seeds through the tube.

Experiment 8. (Wet MBS) This experiment consisted of putting the MBS in a bucket without the lid on and with the plexiglass window facing downward. Then water was channeled into the MBS with water escaping through the holes. Next, seeds were dropped in to observe how the water medium would affect the seeds and their attraction to the holes. Some of the seeds got stuck to the seed capture holes, but these were the seeds which came close to the holes. The other seeds just fell to the bottom. The wet seeds worked, but not with the same ease and consistency of the air MBS.

The wet minnow bucket seeder is promising, but more elaborate experiments have to be made. Some good points are that the seeds can be germinated in the container and the concept is

still simple although not as easy as the air MBS. One unfavorable point is the wet MBS does not control the seeds as well as the air MBS.

Experiment Applications (MBS). A concept based on the results of Experiment 7 uses multiple tubes to transport the seeds. Within the air MBS, construct a retrieval system for the container consisting of fixed tubes under an appropriate column of seed capture holes. After the seeds have been attracted to the seed capture holes, the cylinder will be rotated until a column full of seeds is over the tubes. Then the seeds will be blown into the tubes by a burst of positive pressure from outside the MBS. These tubes lead out of the container and will act as passageways for the seeds to travel out of the container. The outside tube ends could directly plant the seeds or place the seeds in a specified location for future planting (Figure 8).

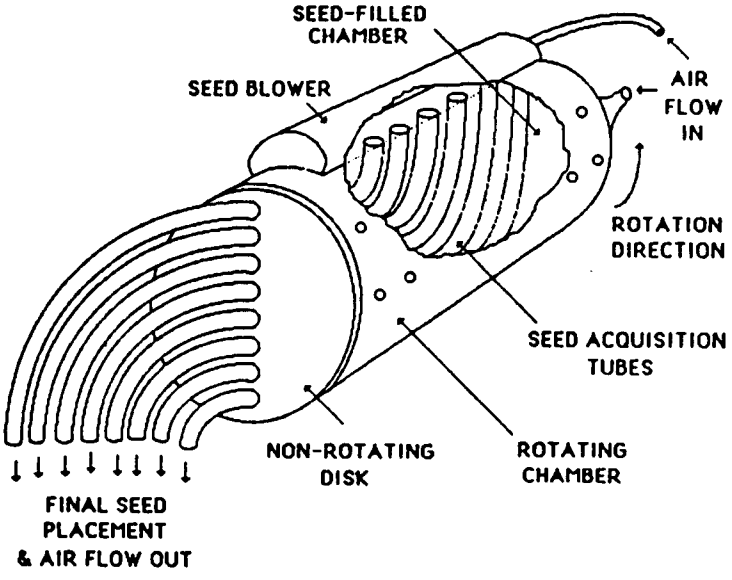

Figure 8. Multiple Tube Seed Retrieval System

An alternative to the previous described is the seed cassette. This retrieval and planting system using the air MBS is specifically considered for flat growth trays with the seeds planted in rows. A cassette will look like a bar which will hold the seeds by the pressure between two films of plastic (Figure 9).

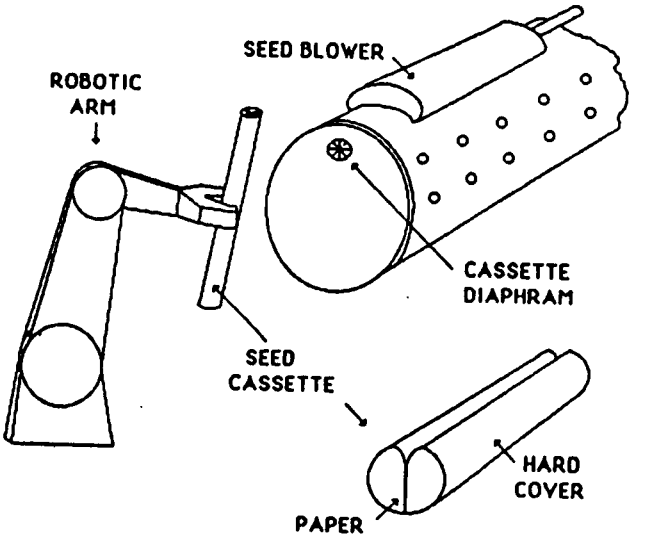

Figure 9. Seed Cassette with MBS

The MBS cylinder is rotated to attract the seeds to the capture holes and then positioned above an inserted seed cassette. The seeds are blown by air jets located outside the MBS into the seed cassette and held by the plastic films. Then the seed cassette is removed by a robotic arm and placed directly in the growth tray (for dry planting) or into a soaking chamber (to allow seed germination) and then into the growth tray.

Gear Effect Seeder. Another concept being considered is the gear effect seeder. This seeder uses a combination of blowing, centrifugal force, and friction to move seeds from the center of a cylindrical container to the outer walls of the container. Slots will be cut into the wall of the container, and the seeds will enter these slots. The idea for this seeder came about as a result of discussions among our design group and from conversations with Dr. Lawrance Shaw of the University of Florida. Dr. Shaw currently has a working fluid planter which has a related design.

In theory, the gear effect seeder uses blowing, friction, and centrifugal force to force the seeds to the outside of a cylindrical container (Figure 10a). The design currently under consideration uses a rotating inner cylinder inside of a fixed outer cylinder. The inner cylinder will have slots cut into its walls, and plates on the top and bottom. These slots will be cut approximately the length of the largest type of seed used, and the plates will be separated by the approximate length of the largest type of seed (Figure 10b). There will be a continuous dispersal air jet in the center of the inner cylinder which will blow the seeds towards the inner cylinder walls. The combination of blowing, friction, and centrifugal force will force the seeds into the slots. There will be a single slot cut into the outer cylinder as well. This slot will be the same size as the slots in the inner cylinder. A vacuum hose will be attached to the slot in the outer cylinder. As the inner cylinder rotates, a seed will be sucked into the vacuum hose every time the slots in the inner and outer cylinders line up. The diameter of the hose will be the

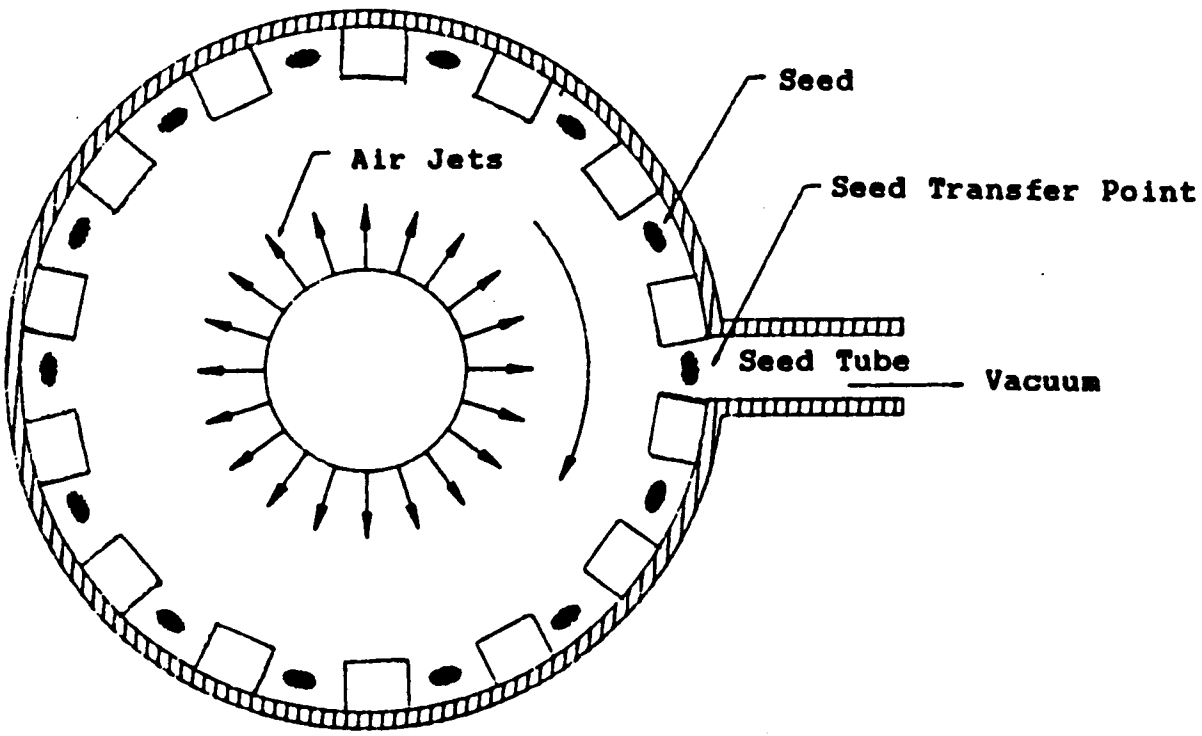

a. Top View

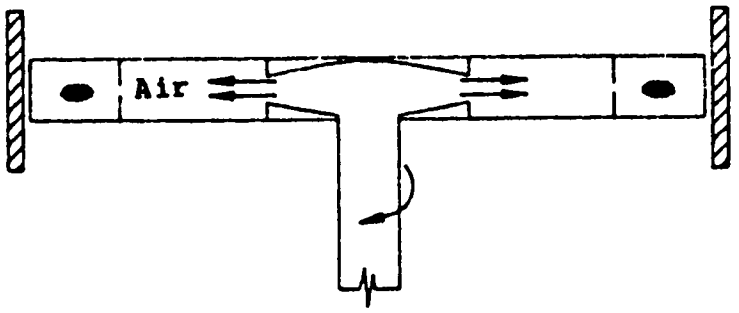

b. Side View

Figure 10. Gear Head Seeder Design

slightly larger than the length of the largest type of seed. Once the seed is moving in the vacuum hose, the seed will come to a junction where a series of valves will switch from using a vacuum to move the seed to using a blower to move the seed. The hose will end in a nozzle which will be held by the end effector on a robot. The robot will move the nozzle to plant the seeds in whatever pattern is desired.

Experiment 9. The goal for experiment 9 was to find a material suitable for use as a separator between the two plexiglass plates. The procedure consisted of using several different materials and observing how they performed. A section of plexiglass tubing was tried first. Unfortunately, the tubing shattered when cut. Next, a piece of rubber tubing was used. However, there was too much friction between the outer cylinder and the tubing for this to be a suitable material. Polyethylene tubing was also tried and the results were positive, but there were still some minor frictional problems.

Experiment 10. The goal for experiment 10 was to use wheat seeds and a inner cylinder with slots to see if the seeds would move into the slots when the cylinder is spinning. Four slots were cut into the polyethylene tubing separating the plates and seeds were placed in the container. The container was then placed on a turntable at 78 RPM to see if the seeds would move into the slots. The results were moderately successful since the seeds did move to the slots. There were problems due to the fact that seeds congregated at the slots. This problem suggests that more than one seed might be vacuumed out of the container at once. Further design/experimentation will be necessary to correct this problem.

Alternative Research

The mechanical division's activities are not limited to the minnow bucket seeder and the gear effect seeder. Another activity of the division is to research designs of other automated seeders to gain valuable knowledge and ideas to use in the group's own designs. The most interesting seeder the division researched was a seeder designed and built by the Department of Agricultural Engineering at the University of Florida.

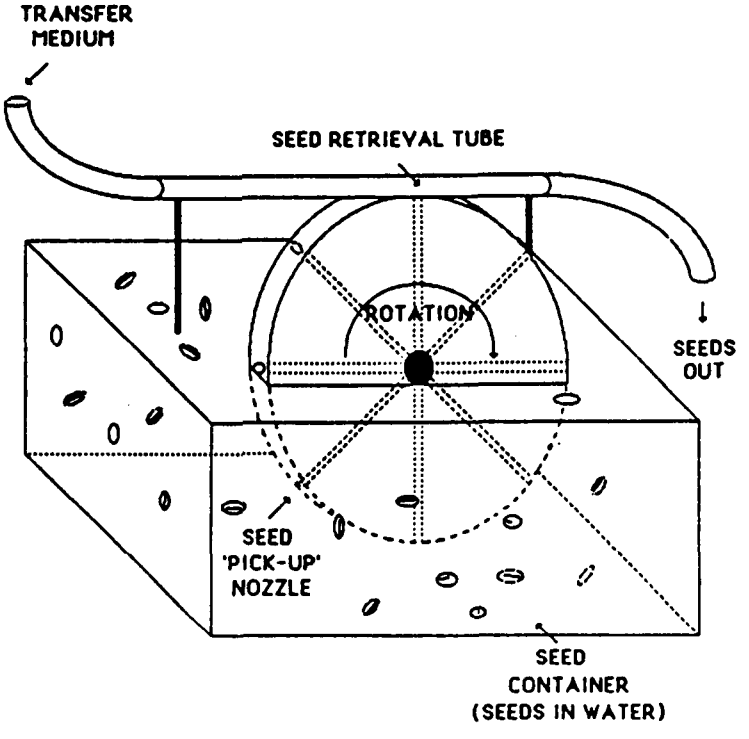

Figure 11. Agricultural Engineering Automated Seeder

The Agricultural Engineering's automated seeder (Figure 11) removes individual germinated seeds from a fluid and moves the seed via a liquid transfer medium. This transfer medium will then move the seeds to a designated location. A more detailed description is given in the following:

1. Seed pick-up: The seeds are removed from the fluid filled container by vacuum nozzles located on a circular disk. The seeds are constantly agitated towards the nozzles to insure pickup.
2. Seed Transfer: Once the seed is picked up by the nozzle the disk is rotated so that the seed will be located at the top of the disk. At this point a positive pressure is applied to the seed to blow the seed into the transfer medium through which it can be to the desired location. The rate of seed pick up can be controlled by varying the angular velocity of the disk.

Concluding, the design idea is promising but for our uses it needs to modified to work in the environment of the CELSS project. The division is currently identifying these problems along with experimenting with seed motion and agitation in a fluid medium [5].

RESULTS TO DATE

Electrical Division

It was concluded that it is extremely difficult to directly charge a seed due to its poor conductance. Inducing a dipole on the seed provided promising results as observed when wheat seeds placed in an electric field aligned themselves in the field lines.

The outcome of experiment 2, using the Van de Graff static generator with the seeds placed in water, showed that good conductance of water would not allow sufficient charge to build up, and therefore, the seeds did not move. The transformer oil used in place of water in experiment 3 allowed the charge field to build up and the seeds to align themselves along the field lines. When the seeds touched one of the electrodes it moved towards the other electrode. The next medium used was air, with a seed suspended between two electrodes by a cord. The seed swung towards the closer electrode. In the last experiment, the seeds were placed on the bottom of the plexiglass container. This resulted in the best outcome allowing the seeds to move freely and rapidly in the electric field.

Mechanical Division

The first experiment involving the MBS, rotating the apparatus with seeds inside, resulted in a favorable outcome. The seeds were captured and remained at the holes due to the change in pressure. Results were successful for the seed transport experiment moving seeds through polyethylene tubing, but the rate and spacing of seeds were random. This was felt to be unacceptable, also, as the number of seeds decreased the probability of seed capture decreased as well.

Experiments involving the testing of materials for the gear effect seeder showed that plexiglass was too brittle, it shattered when trying to cut and shape the piece to the desired form. Rubber was also tried, but friction built up between the inner and outer cylinders. Plastic tubing provided the most successful results, but, there were still some frictional problems. In the experiment to see if seeds would move into the cut slots in the plastic tubing (inner cylinder), results were moderately successful. Seeds moved to the slots, but, there were seeds directly behind the desired seed and would interfered when trying to vacuum a seed out of the container.

PLANS FOR SPRING SEMESTER

Electrical Division

The experiments using an electric field to induce a charge on the seeds provide a solid foundation for future work on seed separation and delivery. With the introduction of air as a medium, the problem of finding a medium that has low conductivity while not harming the seeds has been resolved. A major goal for the future is to find an electric field to move the seeds in the desired direction. This can be done by using different shapes of electrodes in various configurations. Another idea that will be analyzed is the bonding of charged organic molecules to the surface of the seeds. The applications of the electrical methods to the separation and delivery of seeds must be considered in order to produce an optimal seeding system.

Mechanical Division

The major goals for spring semester will encompass further investigation of the wet and dry seeders. This includes more research and development with the MBS for retrieval and planting systems. The seed cassette and the transport tubes MBS retrieval systems will be the primary focus of possible design and construction. The division will also consider ideas using the concepts of the University of Florida Agricultural Engineering seeder as a possible design of a wet seeder.

Robotics Division

Upon the acquisition of the Pro-Arm RS 2220 System, familiarization with the robot will begin. The expertise will be obtained to provide robotic services to any SPS or other class group which needs the robotic arm for their project development.

REFERENCES

1. Uman, Dr. Martin A. 1987. Personal communication. Dept. of Electrical Engineering, University of Florida.

2. Clem, Alex. 1987. Personal communication. Dept. of Physics, University of Florida.

3. 1986-87 EGM 4000/1, Final Report for the Advanced Space Design Program, 1987.

4. International Harvester Farm. 1971. Vol 54(2):2-6.

5. Shaw, Dr. Lawrance. 1987. Personal communication. Dept. of Agricultural Engineering, University of Florida.

6. del Castillo, Eduardo Lopez. 1987. Personal communication. Kennedy Space Center, Florida.

7. Fust, Joseph. 1987. Personal communication. Kennedy Space Center, Florida.

8. "Surface Tension Propellant Management System for Controlling Liquid in Space." Lockheed Missiles and Space Company Fact Sheet, Sunnyvale, California.

9. Farney, Bruce. 1987. Personal communication. Mc Donnell Douglas Astronautics Company, Kennedy Space Center.

10. Searcy, Stephen Wayne. 1980. Development of a Precision Metering System for Pre-Germinated Seeds. Doctoral Thesis, Oklahoma State University, Stillwater, Oklahoma.

11. Watson, Dr. J. 1987. Personal communication. Dept. of Electrical Engineering, University of Florida.

12. Wallace, Donald. 1987. Personal communication. Bioengineering Lab, J. Hillis Miller Health Center, University of Florida.

APPENDIX A

Sample Calculations

Data used. Survival rate of a diet consisting only of wheat is 300 Kg of wheat per year per person. The mass of an individual wheat seed is 3.4 E⁻5 Kg. Each plant yields approximately 15 seeds per plant.

(300 Kg/year/person)/(3.4 E⁻5 Kg/seed)/(15 seeds/plants)=
5.88 E5 plants/year/person.

For an 8 person crew, the planting rates are as follows:
4.704 E6 plants/year,
3.92 E5 plants/year,
9.8 E4 plants/year,
1.4 E4 plants/year,
5.83 E2 plants/year,
9.72 plants/minute.

For a 72 day growth cycle the planting rate is:
1.01 E6 plants.

N89-24018

PLANT HEALTH SENSING

Prepared by

Ara Manukian
Colleen McKelvy
Michael Pearce
Steph Syslo

Fall 1987

SUMMARY

When considering projects for the 1987/88 Advanced Space Design class, plant health and disease sensing stood out as an important problem area that needs to be extensively researched. Designing this type of project has not been exhaustively investigated, so NASA and the CELSS program will benefit from the work that could be done in this area. If plants are to be used as a food source for long term space missions, they must be grown in a stable environment where the health of the crops is continuously monitored. The sensor(s) to be used should detect any diseases or health problems before irreversible damage occurs. The method of analysis must be nondestructive and provide instantaneous information on the condition of the crop. In addition, the sensor(s) must be able to function in microgravity. This first semester, the plant health and disease sensing group concentrated on researching and consulting experts in many fields in attempts to find reliable plant health indicators. Once several indicators were found, technologies that could detect them were investigated. Eventually the three methods chosen to be implemented next semester were stimulus response monitoring, video image processing and chlorophyll level detection. Most of the other technologies investigated this semester are discussed in this report. They were rejected for various reasons but are included in the report because NASA may wish to consider pursuing them in the future.

TABLE OF CONTENTS

INTRODUCTION.....85
Problem Description.....85
Project Description.....86
Design Criteria.....86
Background Information.....87

CONCEPTS AND FINDINGS.....89
List of Sensing Technologies Researched.....89
Technologies Considered.....89
Description of Technologies Researched.....89
Gas Level/Exchange Monitoring.....89
Infrared Sensing Technologies.....91
Odor Sensing.....93
Ion Detection/Monitoring.....94
Magnetic Resonance.....96
Electrical Properties.....97
Resonance Frequency.....99
Technologies To Be Implemented.....100
Stimulus Response Monitoring.....100
Black and White Video Image Processing.....103
Chlorophyll Level and Fluorescence.....104

CONCLUSION.....112

REFERENCES.....113

C-2

INTRODUCTION

Problem Description

In the near future, when long term space travel becomes a reality, the need for food sources will become one of the many crucial factors controlling the duration of a space flight. The ability to grow crops in space can provide a virtually unlimited source of food and oxygen, and when astronauts depend on that food source, their survival is dependent upon the health of those crops. The need for a way to determine the health of those crops will play a very important role. There must be some type of system that can monitor the food crops, determine if the plants are healthy or not, be able to diagnose the problem if the plants are not healthy and finally give an appropriate course of action or cure which can be followed by the crew to insure the survival of the crop.

This system would be subdivided into two parts. The first part should encompass a way of continuously monitoring the plants and detecting any possible problems. The second part must then be able to interpret the problem and determine an appropriate course of action. An expert computer system combined with remote sensors could accomplish this task. The remote sensors would provide a way of continuously monitoring the plants, and the expert system would act as a plant pathologist being able to interpret this sensory data and determine if a problem exists, and then reference its extensive knowledge and data bases to come up with a diagnosis and cure.

The success of this system depends upon the dependability of the remote sensor. There needs to be an effective way of monitoring the health of plants grown in space on a continual basis. Having a automated system would free the astronauts from the time-consuming task of visually inspecting the thousands of plants on a daily bases as well as the requirement of at least one of the crew members being an expert on plant diseases. The

remote sensor is important because there are many plant diseases which can harm a plant before there are any visual signs of damage. For this reason, it would seem that the development of a reliable sensing technology would be very important since one would not be able to insure the survivability of the food crops based on visual observations from the astronauts alone.

Advances in the area of remote sensing of plants health has been very slow. There are a few techniques being used presently here on earth, however, there is still a reliance upon the visual observations of agronomists and pathologists to discover diseases among their crops. On earth, the losses of crops due to missed or late observations would not have the same impact as on a space mission with a limited number crops and crew members whose lives depend on those crops.

Project Description

The Sensor Project Group has selected to research and design a possible remote sensor or sensing technology which could be used to monitor the health of crops grown in space. This sensor will be required before the entire process of automated plant health monitoring can be implemented. There are many sources of knowledge in the field of computer expert systems but very little in the area of remote sensing for plant health, therefore, the development of such a sensor would be useful for both the NASA CELSS Project as well as for the rest of the agricultural community on Earth.

Design Criteria

In designing a remote sensor to monitor the health status of plants to be grown in space, several factors must be taken into consideration. One must not only consider the wide variety of plant types and plant sicknesses, but also the special requirements for such a system to work unattended in micro

gravity. Several goals were set to guide the research into those sensing technologies which showed the highest probability of success.

The design criteria that a remote sensor must meet are:

1. It must act as an early indicator of health plant, that is, it must able to indicate a plant sickness (disease or deficiency) before irreversible damage has occurred.
2. It must respond to a wide range of plant sicknesses which have various types of affects upon those plants. The sicknesses might include all types of pathogen invasion, nutrient deficiencies, environmental and water stresses, and physical trauma.
3. It must respond to a wide diversity of crops (or at least to the types which are being considered for space travel).
4. It must not be destructive to the plant. If a technology requires the sampling of a plant, it must not jeopardize its growth or survival.
5. It must sense an indicator of plant health which is accurate and dependable for all plants. There should be no false alarms nor late warnings.
6. It should give a real time estimate of the health status of a plant, instead of an analysis dependent on measurements over time. In this way, the condition of many plants could be monitored rapidly.
7. It should not contaminate the growth chamber. The generation of toxic waste products or particulates would have harmful effects.
8. It must fit within the growth chamber and be easily moved from plant to plant within a crop type.
9. It must operate in microgravity and must function properly independent of orientation.
10. The design and construction of such a sensor must fall within the resources of the Design class.

Background Information

The design, construction, and testing of a remote sensor will fall within a two-semester time frame. This entire process was divided into two phases, research and implementation, with each phase lasting one semester.

During the first phase, research, information pertaining to plant diseases, nutritional deficiencies and various stresses were accumulated from numerous plant pathologists, agronomists, agricultural engineers, biologists and other scientists. The goal in this research was to find a common indicator of health for the crops being considered for space travel (potatoes, wheat, lettuce, and soybeans). Once a potential indicator(s) had been selected, our efforts were directed towards finding a technology that could detect that indicator.

The next part of our research called for finding any and all possible technologies that could possibly be applied towards the sensing of plants. This area of research was broken into three categories:

1. Investigating already existing technologies in the field of remote sensing of plants and assessing their suitability or adaptability for the established criteria.
2. Finding any technologies being used for remote sensing in other areas such as the medical and engineering fields, and estimating if they could be adapted to plant health.
3. The development of a new sensing technology based upon scientific and/or engineering principles that could be tested.

After finding the possible technologies that could be used to monitor or sense the indicator of health on a plant, we then narrowed down the various technologies to those which could work with all the food crops. We then eliminated potential sensing technologies due to their cost or because there already had been extensive work done in that area. The next phase would be the investigation of some potential technologies through design and testing of the sensor.

The second phase, implementation, begins next semester. Having narrowed down the potential sensing technologies, we plan to test each of our theories on live plants after developing the physical sensor itself.

CONCEPTS AND FINDINGS

List of Sensing Technologies Researched

Several technologies applied to remote sensing were researched during the semester and are listed below. Advantages and disadvantages of each were studied before narrowing down this list to three potential sensing technologies, which will be implemented next semester.

Many of these technologies that were researched and listed below have great potential for working as a successful remote sensor but most were not included in our implementation phase for next semester due to one or more of the following reasons: excessive equipment purchases, extensive research already done in this area, and excessive time requirements.

Technologies Considered.

1. Gas level/exchange monitoring
2. Infrared (IR) temperature monitoring
3. IR video imaging
4. Spectral reflectance using color IR film
5. Odor sensing
6. Ion detection/monitoring
7. Nuclear magnetic resonance
8. Electrical properties
9. Resonance frequency
10. Stimulus response monitoring
11. B/W video image processing
12. Chlorophyll level and light absorption

Description of Technologies Researched

Gas Level/Exchange Monitoring. Carbon dioxide and oxygen gas levels are good indicators of the health status of plants.

During photosynthesis, sunlight is captured by the photosynthesis unit of a plant cell in a leaf, consuming carbon dioxide and producing oxygen and carbohydrate. The overall process can be summarized in the following equation:

$$SUN + 6\ H_2O + 6\ CO_2 = C_6H_{12}O_6 + 6\ O_2$$

A healthy plant at a certain age or size will take in a specific amount of carbon dioxide and expel a specific amount of oxygen. These levels can be accurately monitored in a closed environment and can be recorded as the proper levels of gases exchanging in that closed environment. These levels will relate to a normal photosynthetic rate of a healthy plant. Because CO_2 intake is a direct indicator of photosynthesis rate, it is used extensively in plant physiology as an indicator of the well-being of the plant. As a plant becomes diseased, the photosynthetic rate of the plant can increase or decrease (which is normally the case). By monitoring the levels of carbon dioxide in the growth chamber, one would notice any sudden changes in the photosynthetic activity of the plants. One advantage of this type of monitoring is that it can show changes in the plant health before signs of any physiological effects can be seen on the plants. One drawback of this technique is that it might not work for every disease, and studies have indicated that chlorophyll levels can drop by 40% before the photosynthesis rate drops noticeably. The second drawback is that the monitoring device must come into contact with the plant leaf to make an accurate measurement, and these measurements of the CO_2 uptake rate are difficult to correlate to plant health when they are made in two different leaves or two spots on the same leaf. For these reasons, and since extensive research has already been done in this area, this technique will not be implemented [1].

Infrared Sensing Technologies. The use of IR imaging is a promising and extremely useful technology which can be used in the remote sensing of plants, however, it is also extremely expensive.

IR Video Image Processing: This technology has been used in various areas in engineering and medical research and uses an IR video camera system which is combined with a computer. The computer is used to process and analyze the video signals received from the camera system. The images produced are color pictures in the shape of the object being imaged, having different temperature regions mapped out in different colors.

Infrared imaging allows continuous monitoring of plants and the development of color images relating to the temperature patterns on the surface of the plant. These temperatures can correspond to the transpiration process (loss of water through evaporation) which is occurring from the surface of the leaves and which is a function of the ambient vapor pressure and temperature in the surrounding atmosphere and the amount of water within the plant. These color patterns can also indicate the presence of dead or damaged leaves since these areas will not be transpiring and will show up as areas of different temperature.

This technique appears to be promising for remote sensing because a plant's temperature and its transpiration rate are all good indicators of plant health. Color patterns for a normal healthy plant can be stored by a computer and used as a reference. The image processing software will then analyze the new image and determine deviations from the reference patterns which would indicate potential problems. By creating a library of color patterns of plants with various diseases as a set of references, the image processor would be able to identify a specific disease.

An IR camera can be easily manipulated throughout a growth chamber and between individual crops. It is nondestructive and could work with a wide range of plants. The sensor project

group, however, will not be able to test this type of system due to the enormous costs involved in obtaining the state-of-the art IR image processing equipment needed to implement this technology.

IR Temperature Monitoring: A simpler and cheaper form of infrared sensing used to monitor plants is the use of IR "guns" which simply measure the average temperature of an object, instead of the elaborate temperature differential given by an IR imager, thereby eliminating the need for expensive image processing equipment. This temperature reading of an object is easily obtained by turning on the handheld IR gun, and aiming/pointing the gun at an object. This device is extremely accurate and gives a precise measurement of temperature.

The main application of this technology is detection of water stress among crop plants. Many plant diseases can be directly related to water stress or can place a plant in a state of water stress. In either case, there will be some effect upon the transpiration rate of the leaves involved. Changes in the transpiration rate will cause changes in the temperatures on the surface of the leaves which can be detected by the IR "gun". By knowing the normal temperature ranges for various crops, one can detect changes in the transpiration rate due to some abnormality by using this IR "gun". The main disadvantage to this technique is that it cannot distinguish between the possible causes of an abnormality. The sensor group decided not to implement this technology during the second semester due to its limited diagnostic capabilities and the extensive work that has already been done using field crops [2].

Spectral Reflectance Using Color IR Film: One of the first technologies that was considered during this semester was near-infrared analysis of plant health using color IR film. This process measures the reflected energy coming from the plant, as opposed to the heat given off. The film is sensitive to visible

and near-IR radiation, which lies between 0.58 and 0.9 microns of wavelength. Pictures of healthy plant leaves as well as those of plants infected with known diseases would be taken. These photos would be studied and compared until spectral reflectance signatures for each plant type and disease could be identified and documented. This analysis involves observing color and reflectance intensity variations on the film and deciding what conditions represented normal energy levels on the leaf, as well as those that are abnormal. On an IR photograph, this diseased area of the leaf would appear darker than the surrounding healthy region. Eventually, the actual health sensing procedure would involve taking pictures of the plants every day, developing them, comparing them to the standard signatures that have already been obtained and looking for changes in reflectance that may indicate that the plant has developed a problem.

Unfortunately, the technology required to fabricate this project was too expensive for the class. For use on a space craft, an IR video image processor would be needed to quantitatively compare the test photographs to the standard reflectance signatures. The skill and time required to perform this type of comparison, in addition to establishing the signatures themselves, would be too great for the sensing group to do manually. In addition, one of the design criteria established was that the sensor must work in real time, so pictures would have to been taken, developed and processed every day. Although this type of plant health sensing is not a technology that this class chose to pursue, NASA may wish to investigate it further, because spectral reflectance using color infrared film is one of the few nondestructive methods for identifying disease on the plants at an early stage.

Odor Sensing. A new indicator that was considered for detecting disease in plants is odor sensing. Originally, this idea specifically dealt with potatoes. In potato tubers infected by diseases such as Brown rot or Late blight, decomposition and

fermentation occur and a foul odor is produced. When celery is attacked by disease it also releases an sweet odor. Since humans can smell the odor, it is feasible that a gas sensor placed above the crops in a closed environment might detect a problem before any major harm could occur.

After some research and consulting with experts, this sensing technology was rejected. In space the gas released from the infected root area may not rise directly above the plants and more likely will dissipate outward. Experimentation in microgravity may prove that a sufficient amount of gas may not be detected by the sensor placed directly above the crops. It was also found that potatoes, in general, must be severely infected by a disease before the roots release enough gas to detect. Lesions and discolorations on the leaves usually occur before decomposition of the roots. Remote sensing of the leaf surface would be a more effective early warning sensor than odor detection. Finally, this technology did not meet the predetermined criteria because its use is limited to potatoes and celery.

Ion Detection/Monitoring. Growing higher plants in a space environment involves a complex scheme of interrelated systems. Along with the concerns about containment, plant support, planting, and harvesting is the area of plant nutrition. The productivity of the plants to be used as food must be maximized due to space and resource limitations. Since the nutrition of the plants grown will probably be delivered by hydroponic systems, control of the composition of the nutrient solution must be constant and precise. However, analysis of the solution for the widely varied concentrations of numerous individual nutrients would require a method or methods within the range of skills of the operators, either human or mechanical. Also, on deep space missions, equipment must be sufficiently durable to last the mission, or it must be repairable or replaceable by the crew or the mechanical devices aboard. If they are to be replaceable or

manufactured, they must require a small amount of material and the manufacturing process must not present a hazard to the crew.

Current methods for analysis of plant nutrient solutions involve the use of atomic absorption or inductively-coupled plasma spectroscopy, which analyze for discrete elements. These methods require detection devices specific for each element, and the use of high-pressure gases to deliver the solution to be analyzed to either a flame or an induction furnace. The routine use of such systems requires a human operator with considerable skill in both the use and maintenance of the equipment. These analyses also take a substantial amount of time, with occasional repairs that shut the system down completely. These are fairly complicated methods which require a high degree of user attention, and which also are potentially dangerous in space.

Another method that is being developed for routine analysis of ions in solution is ion chromatography. This method has the advantage of analyzing for a number of ions within the same solution. The machinery involved requires a fairly high level of skill to operate and maintain, and current models appear to be too delicate and temperamental for use in space. However, this does not prevent their use in the future if certain problems can be worked out in their design.

An alternative method is the use of ion-selective electrodes. These function on the principle that a specific ion will interact with a specific membrane to generate an electrical potential that is proportional to the concentration of the ion in solution. These are very sensitive to their respective ions, but other ions in the solution can interfere with the measurement of the desired ion. They are also specific only for the particular ion, they require periodic refurbishment, and manufactured electrodes are fairly large and expensive.

However, an alternative design for ion-selective electrodes has been developed [3]. These electrodes consist of a film of a suitable polymer containing the desired ion coated on a conducting metal, and have response characteristics equal to or

better than the manufactured electrodes. They are small and inexpensive to make, can be produced on site, and can be custom designed for a wide range of ions. The manufacture of the electrodes would use either platinum or copper for the wire, and either polyvinylchloride (PVC), poly(methyl methacrylate), or epoxy resin as the coating substance. The appropriate salts of plant nutrients (which could include calcium, magnesium, potassium, ammonium, nitrate, iron, zinc, manganese, sulfate, or phosphate) would be incorporated into the polymer, and the wires would be coated by repeated dipping and drying. Construction of microelectrodes on a microchip is a present technology [4], but the number of elements tested may be limited. This adds a level of miniaturization, such that the astronauts could take a supply of these chips along without much weight.

While this method has potential for the monitoring and maintenance of the nutrient solutions used for plant growth, this technology lies outside the range of plant monitoring for this study.

Magnetic Resonance. This technique operates on the principle that transitions between magnetic spin energy levels of certain atomic nuclei can be induced in a magnetic field. The energy required to cause these transitions in the radio frequency range. The use of an interaction between an applied magnetic field, radio waves and atomic nuclei provides a direct non-invasive monitor of biochemical events in selected regions of living cells, tissues or organs of live animals or humans [5].

While there has been great emphasis on applications to the investigation of cell membrane function, biochemical reactions, and NMR imaging of human subjects, little or no information has been generated on these characteristics in plants. Also, the equipment used is massive, requiring a large electromagnet, a radio wave source, and sophisticated support computers. At its current stage of development, the weight and size of the apparatus would make it unusable in space craft. The pursuit of

investigation of this technology would be inappropriate for our class project. However, under circumstances which would allow the use of this technology, much information about the physical and biochemical nature of plants could be generated.

Electrical Properties. Plant tissues are conductors because of the content of ions in the cell sap, and any stress or physiological imbalance may affect the ionic composition. Because of this, measurement of different types of electrical properties of plant tissue may give information on the physiological health of the plants being monitored. Many of the electrical properties of plant tissue involve dielectric constants or permittivity. A number of these types of measurements are included under this heading.

Electrical Properties: The interaction of electric and magnetic fields with organic matter have been considered as biological effects of nonionizing radiation, even though these fields do not involve any radiation. The wavelengths of these fields are so large that they do not produce any effects of radiation, such as ionization, and these fields have components that store energy without contributing to radiation. However, electrical fields of sufficient magnitude can orient dipoles, or move ions or polarizable neutral particles. Microwaves (in the radio frequency range) have also come into use for their heating effects, but all biological effects of radiated radio frequency power do not necessarily arise from temperature changes. The magnitude of the external or applied electrical field is always larger by several orders of magnitude than the resultant internal electrical field.

Most electrical processes known to occur naturally in biological systems (action potentials) are limited to direct current and extremely low frequencies. Some physiological effects may occur even if the magnitude of these fields is not large enough to produce thermal effects [6].

Electric fields can affect root growth by affecting the transmembrane potential [7], while magnetic fields can affect the orientation of shoot growth [8]. Electrical fields have been used to form channels between contacting cells, resulting in a fusion of plant cells, with the resulting mixing of genetic material resulting in new varieties of plants [9].

While there are distinct effects of electrical fields on plant tissues, there is little or no information on how these effects could be used as a means of monitoring plant health. These stimuli might be used in later research, but the present stage of development does not permit their use in a project on the scale of the Design class.

Electromagnetic Testing Methods: Eddy current testing involves the use of alternating magnetic fields and can be applied to any conductor. When an alternating current is used to excite a coil, an alternating magnetic field is produced and magnetic lines of flux are concentrated in the center of the coil. As this coil is brought near an electrically conductive material, the alternating magnetic field penetrates the material and generates continuous, circular eddy currents. Larger eddy currents are produced near the test surface; as the penetration of the induced field increases, the eddy currents become weaker. The induced eddy currents produce an opposing (secondary) magnetic field in the opposite direction to the generated (primary) magnetic field. This opposing magnetic field, coming from the material, has a weakening effect on the primary magnetic field and this change can be sensed by the test coil. In effect, the impedance of the coil is reduced proportionately as eddy currents are increased in the test material [4].

Any parameter that can affect the electrical conductivity of the test area can be detected with eddy currents. Since plant cells are conductors, a baseline conductivity for selected plant organs could be determined under optimum conditions and used as comparison during growth cycles. When used with plants, the

sensor would be a coil positioned above the surface of the plant part, probably the leaf. However, when attempting to measure changes in conductivity, changes in the distance to the material being measured are not desireable, so the measuring probe would need to accurately positioned at the leaf. A variation of this configuration is a probe in which the detector coil is positioned directly opposite the excitation coil may not be feasible, since the results are affected by the thickness of the material being tested, and plant leaves can vary greatly in thickness.

There is little information about application of this technique for plant materials, and the precision with which the probe must be positioned at the leaf surface is beyond the capabilites of the class.

Resonance Frequency. One original method for detecting plant health, which involves measuring the resonant frequency of a leaf, was researched by the group this semester. The idea involves oscillating a leaf at a known frequency, then using an image processor or perhaps a simple laser "gate" to measure the resonant frequency that the leaf reflects back upon the device holding the leaf. The frequency of the leaf would be proportional to the rigidity or stiffness of the leaf, and this in turn could determine the water pressure within the leaf. Through research and by consulting experts, measuring the level of water stress is a good way to assess plant health. A fully turgid plant has as much water as it can hold, and its elasticity is at a maximum. If root rot, stem rot, or wilt attack the plant, the vascular pressure and water content is reduced. These diseases stop the roots from moving water up through the plant, thus reducing water pressure. It takes time for the water pressure of the plant to decrease to a critical level, so if a decrease in resonant frequency was detected early, the disease could be treated by adding more water or changing the humidity and temperature in the environment, and the plant could be saved.

The technologies that are used today to measure this type of water stress are destructive. They involve either taking a small piece of a leaf, or taking a sap sample from the vascular system and measuring the water content using expensive equipment. Finding a leaf's resonant frequency looked very good as long as this measurement related to the water stress in the plant. Unfortunately, the stiffness of a plant depends on more than just the water pressure. For instance, if the leaves and stem have accumulated a high level of starch, the leaves may be leathery and inflexible, even though the plant may be fully turgid. Plants grown in lower light and humidity may be more flexible. Because a resonant frequency measurement may result in misleading information about the water stress in the plant and a visual measurement of frequency would probably be inaccurate, this technology will not be further researched in the second semester.

Technologies To Be Implemented

The following are the three methods chosen for further investigation in the next semester. These will be discussed in more detail than the previous technologies, along with plans for the construction and testing of the methods chosen.

Stimulus Response Monitoring. Since a plant is a living organism, a plant might react to an externally applied stimulus. By subjecting a plant leaf to an electrical, heat, intense light, chemical or physical source as a stimulus, the leaf might "react" and plant responses could be detected. Responses to stimuli (Figure 1) could show noticeable differences in the reactions of healthy and sick plants. Reaction times to the stimuli could be different as well as the changes themselves, and these differences could be catalogued.

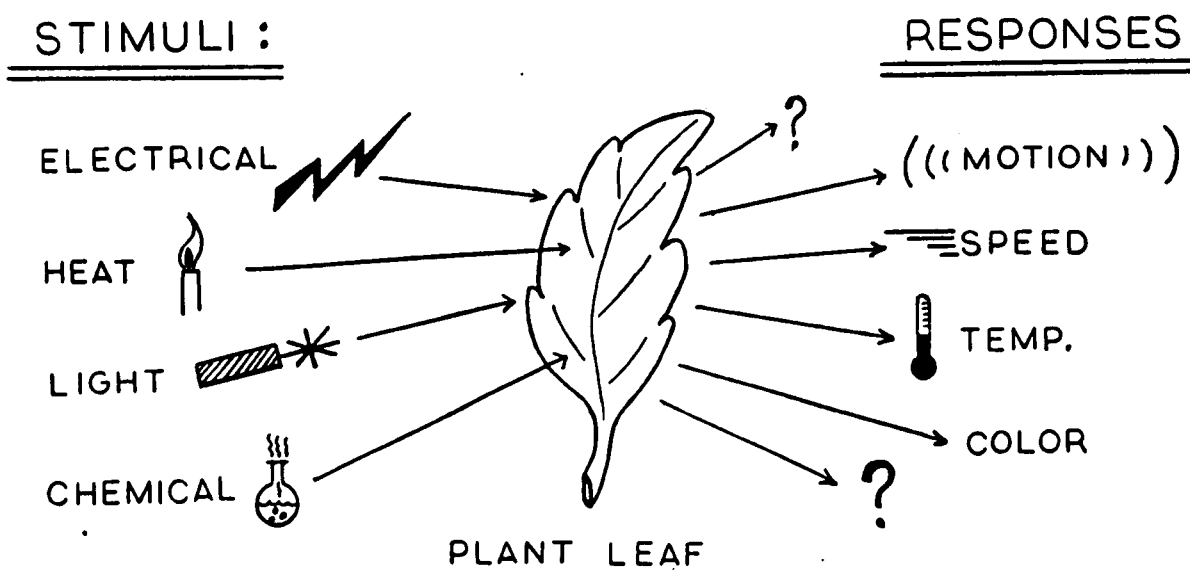

Figure 1. Plant Response to Stimuli

A number of methods can be used for this depending on the nature of the stimulus and the response being measured.

Visual Inspection: A long-distance microscope would enable the user to obtain microscopic examination of objects (in excess of 100x magnification) at relatively long distances. This would be an non-invasive technique and would allow for close inspection of the plants in the growth chamber without opening the chamber. It can also be used with photographic and video equipment. As with other video applications, the images could be enhanced and digitized for comparison to a library of information for the particular plant being studied [4].

Acoustic Emissions: Mechanical or thermal stress of materials, if continued to deformation or fracture, can generate an acoustic signal that warns of the impending failure. However, some deformations and fractures are so minute that extremely

sensitive listening devices must be used to hear them. Many of these acoustic emissions are beyond the range of normal hearing and well into the ultrasonic range. Therefore, acoustic emission signals are both difficult to measure and difficult to simulate.

The combination of a transducer, preamplifier, amplifier, and oscilloscope form the basic acoustic emission monitoring system. The transducers used to acquire these signals are piezoelectric sensors, which can be used in the sonic and ultrasonic ranges. However, these techniques require actual contact with the surface being tested, or, as in the case of some ultrasonic applications, the immersion of the sensor and the material of interest in water [4].

Further information will be generated about the applicability of this technique in the next semester.

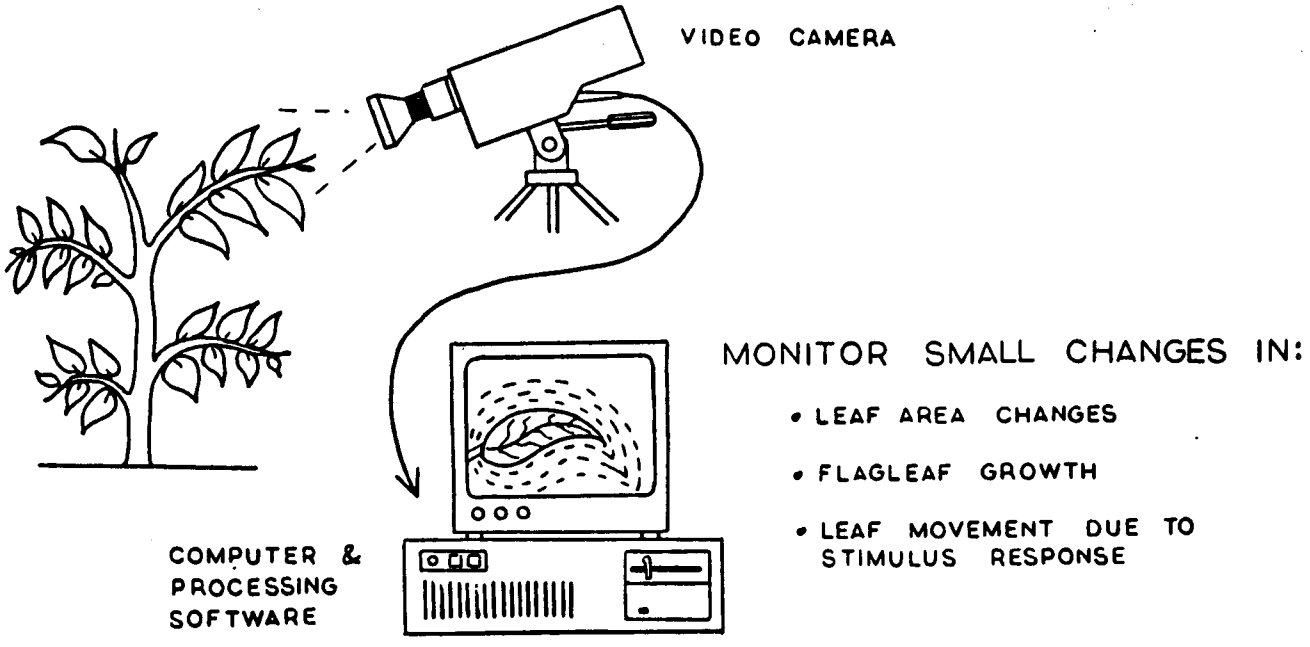

Figure 2. Black and White Video Image Processing

Black and White Video Image Processing. The video processing system, which includes a black and white video camera, personal computer and image processing software, can be used to accurately monitor very small changes in size, area or motion of an object. This system could be used to monitor the growth rate of a plant by looking at various growth aspects of a plant. It could monitor the overall canopy growth rate, the change in area of a single leaf, or search and find the flagleaf to measure its change in size. The flagleaf is the newest (and usually the smallest) growing leaf on a cereal type plant, and is a good indicator of the production of new plant tissue. The normal growth rates of a healthy plant would have to first be established, then this data could be stored and compared to new images of a plant that is currently being scanned (or monitored) to determine if it is growing at the normal rate of a healthy plant (Figure 2).

An image processing system for the analysis of plant health can be broken down into two subsystems: the image acquisition system and the image analysis system. The image acquisition subsystem could be either a image digitizer that scans the image field and produces a binary file or a standard television camera combined with a computer system that converts the image into a binary file.

The data file can be in one of three forms for black and white images. The first is the standard, unprocessed form, which consists of a field of pixels, each with its own intensity ranging from black to white (there are usually 256 possible intensity values). The second type is called a halftone image (similar to a picture in a newspaper), and consists of black dots of varying sizes. The unprocessed image is divided into fields of 64 pixels each (8 x 8), and each field is assigned a black dot whose size is proportional to the average intensity of the pixels in its field. Thus the original image data is "compressed" to about 1/8 of its original size, while still retaining good resolution. Some types of image processing will work better with

halftones, since the data to be manipulated is much smaller in size. The last type is the threshold image. To produce this type, the scanned pixels are assigned a black or white value (0 or 1) according to intensity relative to a predetermined value. This method works best with images on high contrast; most of the information is lost when this is used on a object with extensive shading or opaquity. None of these systems present any technological problems, for the technology involved has existed for dozens of years.

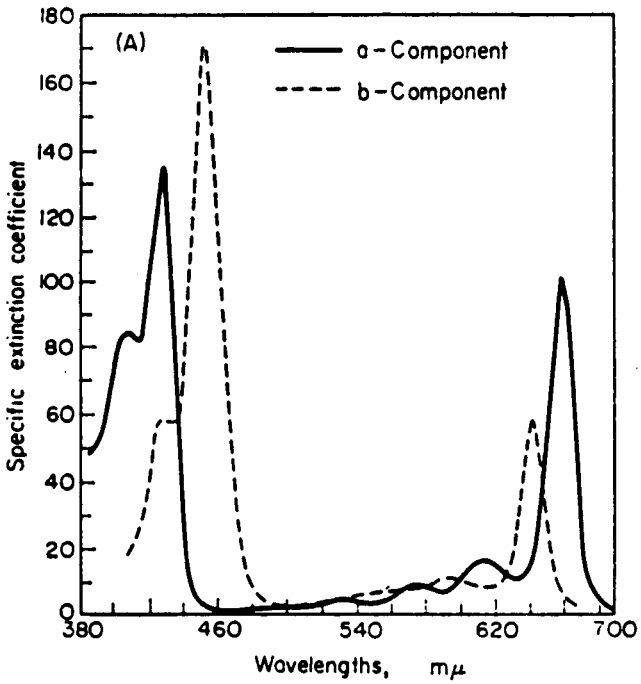

Absorption spectra of chlorophyll a (solid line) and chlorophyll b (broken line).

Figure 3. Chlorophyll Absorption Spectra

Chlorophyll Level and Fluorescence. The choice of chlorophyll activity as a plant health indicator was derived from the study of micronutrient levels in the plant as health indicators. It was thought that these levels could be monitored nondestructively, that is, while the micronutrients were still in the plant leaf, and the simplest way to do this seemed to be by spectroscopic measurement. Spectroscopy is based on the fact that atoms and molecules can absorb and emit light of specific wavelengths corresponding to the energy levels of their valence

electrons. Thus each molecule has its own characteristic spectrum composed of sharp peaks of either light absorption or light emission (Figure 3). Spectroscopic measurements are made by exposing the sample (in this case the plant leaf) to light of a certain wavelength and measuring the transmitted light level. The problem with using this method to measure micronutrient levels in plants is that there are about 15 micronutrients that need to be monitored, and such a system becomes complicated both in the monitoring of the micronutrient levels and the interpretation of the data. It is much simpler to measure the uptake level of micronutrients by monitoring the growth solution with ion-selective electrodes than to analyze the plant leaf.

Although it is not feasible to measure the micronutrient levels of plants spectroscopically, there are other concentration levels that can be measured using this method. The most important of these was found to be chlorophyll activity, which will give information on the health of the photosynthetic system of the individual plant [10].

Chlorophyll activity has the advantage over other plant health indicators in that it looks at the source of plant growth, rather than measuring the growth itself or a consequence of this growth (or lack of it). One of the most sensitive plant health indicators, carbon dioxide intake, is an indirect measurement of photosynthesis. The problem with this type of indirect measurement is that it suffers from a lag time between the beginning of harm to the plant and the drop of carbon dioxide intake. In other such secondary indicators this lag is even more profound; it takes time for growth rates to change, for transpiration to rise, and for other properties to react. This is a primary advantage of chlorophyll level measurement, for it is measuring the definition of plant health, and not the lack of health.

There are other methods for measurement of the chlorophyll activity in plant leaves, but spectroscopy is the simplest and most accurate method available [11]. Several methods of

chromatography are currently used to measure concentrations of chlorophyll, but these methods are destructive and require the removal, transportation, and preparation of leaf samples, thus adding the complexity of mass transport and contamination of the growth chamber. There are also the traditional chemical laboratory techniques, but these share the same disadvantages as chromatography. Thus the spectroscopic plant health sensor (hereafter referred to as SPHS) system has an inherent advantage over destructive testing because the sample in kept in the leaf and there is no problem of loose samples floating around in microgravity.

A spectroscopic system for measurement of plant health would be very simple in design. It would consist of a light source and light intensity meter with the optics necessary for handling the light, a robotic device to bring the source and meter to the plant, and a computer to interpret the data. The light source could be either a laser tuned to the required wavelength of light or a high power lamp source with a monochromator to obtain the needed wavelength [12, 13, 14]. Fiber optics could possibly be used so that both the light source and intensity meter could be remotely located, thus reducing the size of the system/plant interface. The light intensity meter would consist of a sensitive photodiode, with the electrical output going to the computer. The interpretation of the single reading (multiple readings could be averaged to obtain a mean) would be simple and could be done on the average personal computer. The interpretation program will contain data about the average absorption reading and acceptable range for each type of crop in their various stages of development. The program will compare the input from the photodiodes to the stored data and determine whether the health of the plant is satisfactory.

The intentionally vague term "photosynthetic activity" was used to describe the parameter to be sensed by the SPHS because there are two types of spectroscopic measurement that give information on the health of the plant; light absorption and

light fluorescence by the chlorophyll. The two types differ in the phenomenon that they are analyzing, and thus will provide different types of information as to the plant health. These systems also vary slightly in the design of the spectroscopic system but are similar enough to be incorporated in the same design.

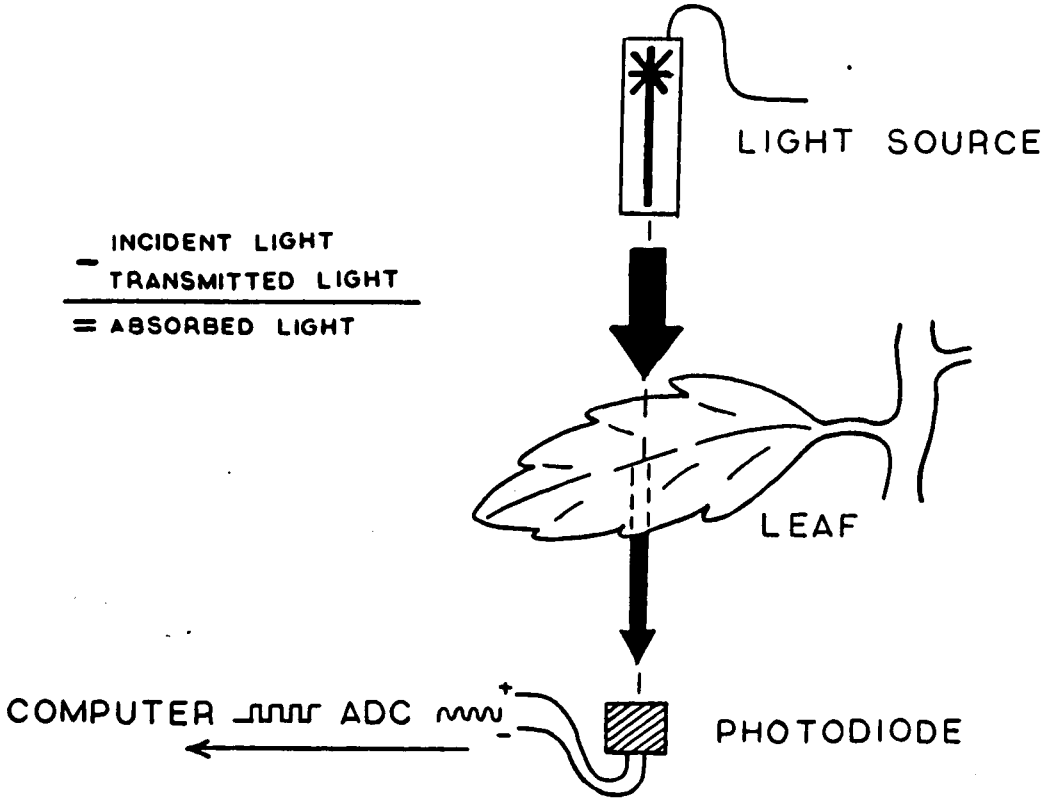

Figure 4. Absorption Spectroscopy

The first, absorption spectroscopy, is done by comparing the intensity of a beam of monochromatic light at the wavelength of an absorption peak that impinges on a leaf with the intensity of the transmitted light. Chlorophyll A (the more prevalent type) has two absorption peaks; one at 422 nm and one at 640 nm [15]. One can calculate the concentration of the chlorophyll that is absorbing that specific wavelength of light. It is not important, for the purposes of this system, to calculate the

actual concentration of the chlorophyll [16]. The plant health analysis program would contain data on the acceptable absorption reading for the plant leaf and take into account the crop type, age of the plant, and any other factors that may affect the absorption (Figure 4).

The use of light absorption as an indicator stems from the easily observable phenomenon of chlorosis. Chlorosis is the loss of the green color in the plant leaf due to the decomposition of the chlorophyll in the plant cells as a result of stress. This is the cause of the yellow or dark green color in sick house plants, and on initial observation of a stressed plant, chlorosis is usually the first visible warning of declining plant health [17]. Chlorosis is an early indicator of a wide variety of plant stresses, the most important being improper light level, micro- and macronutrient deficiencies, and pathogen invasion [18]. It is simple because the result of a measurement consists of a single value of the percent light absorbed and requires little computer processing, as opposed to image processing plant health systems that must process data in the megabyte range. In a image processing system, it is often difficult to reach a conclusion as to the meaning of the sensed data, whereas a spectroscopic system could provide a yes/no answer as to the question of plant health with a high degree of confidence. Also, because the system is simple, the dependability of the system should be good and the MTBF should be higher than a more complicated system. The main disadvantage of this system is the need to make the measurements at the same location repeatedly. Some leaves have higher chlorophyll levels and thus higher absorption levels, and the absorption on a specific leaf varies with age and location on the leaf [19]. This problem should be able to be overcome by insuring that readings are taken repeatedly in a predetermined spot on a specific leaf and by accounting for possible variations in the absorption reading in the plant health analysis software.

The second type of measurement that indicates plant health is the fluorescence of the photosystem. Fluorescence is a complicated phenomenon, and occurs when light of a certain wavelength strikes a chlorophyll molecule or light gathering dye and momentarily raises the energy of the molecule. The molecule stays at this higher energy state for a short period of time (in the picosecond range) and then emits this energy as light of a different wavelength (Figure 5) [20].

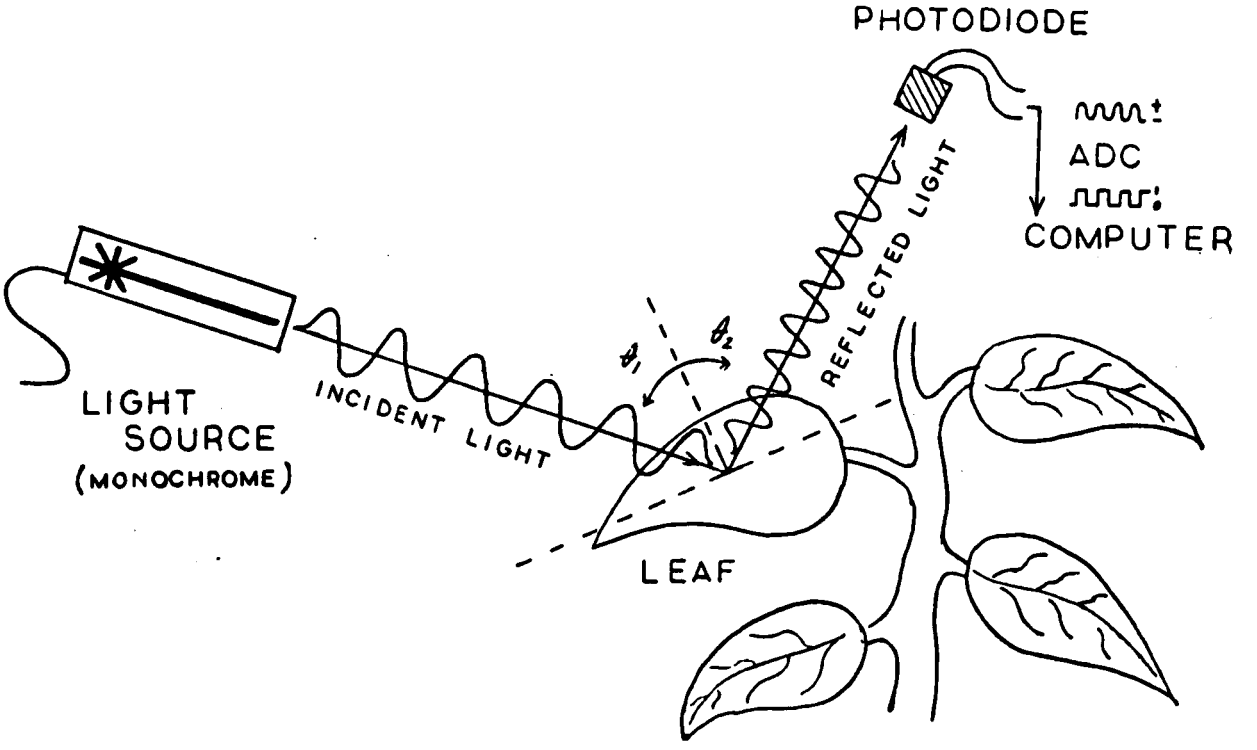

Figure 5. Fluorescence Spectroscopy

The interactions that occur in the molecule during fluorescence are complicated and are the subject of much current research [21]. When the leaf is exposed to a short burst of light, the time-varying fluorescence signal (usually with an intensity of about a thousandth of the incident signal) reaches a peak after a short time and approaches a minimum asymptotically (Figure 6).

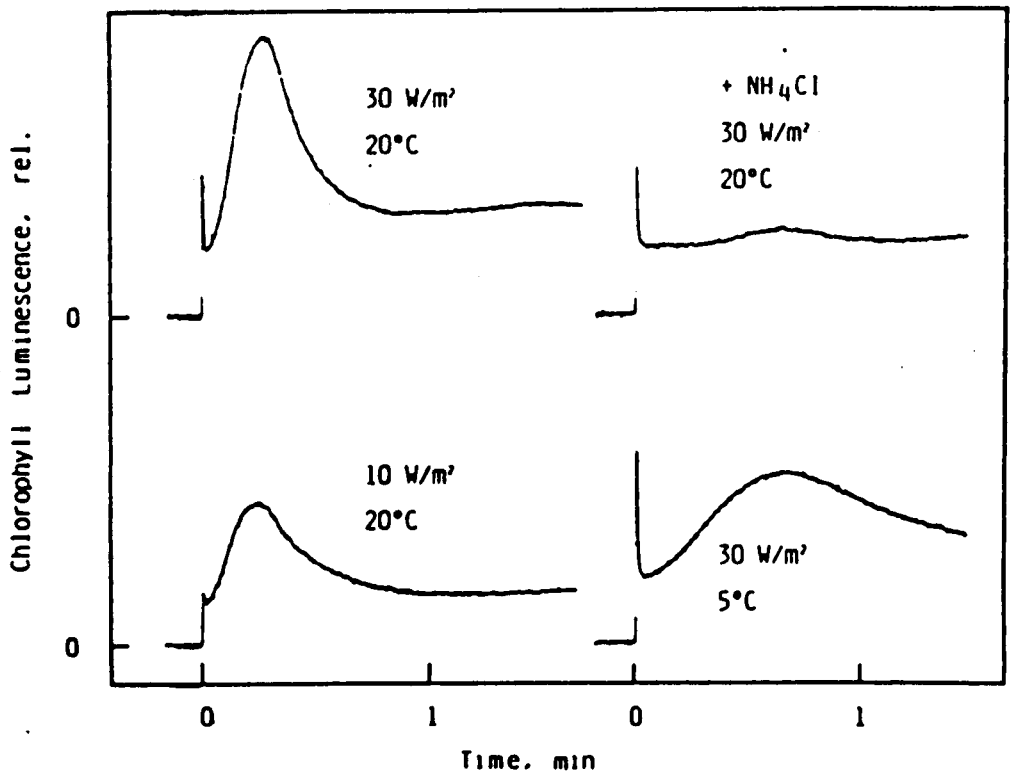

Figure 6. Leaf Fluorescence

This signal can be compared to others from similar plant types, or can be integrated to give a single value that can be processed in the same way as the absorption signal.

Spectroscopic measurement of fluorescence differs from absorption measurement in that it is looking at the "state" of the photosynthesis system rather than the concentration of chlorophyll in the leaf. Fluorescence characteristics of a plant leaf change when subjected to some types of stress such as temperature drop, CO_2 starvation, and water stress [20, 21]. It has the advantage of earlier indication, for the fluorescence of the chlorophyll is very sensitive to changes in the plant environment and will change as a result of stress long before the chlorophyll begins to decompose and the absorption characteristics change. Also, the exclusion of external light from the measurement area on the leaf is not as critical, for the signal from the photodiode can be compared to a base value that is caused by the ambient light that hits the leaf before the

excitation pulse of light is shone on the leaf [24]. The main disadvantage of fluorescence measurement is that there are environmental factors that are unimportant to plant health but may cause variation in the readings while the health of the plant is unaffected. Such variations are plant age, measurement spot choice, concentration of specific molecules, and even pressure on the leaf surface from the measurement device, and these variations are much greater than those that would be measured with an absorbance method [19]. Thus there seems to be a trade-off in these two systems between sensitivity (fluorescence) and correlation of data (absorption). .

The SPHS seems to be the most promising system for the indication of plant sickness in a growth environment such as that planned for use by the CELSS project. Its primary advantage over CO_2 sensing in that the plant or leaf will not have to be enclosed to make a measurement. Other advantages are simplicity of design, thus leading to a lighter, smaller system with minimal maintenance. The greatest possibility of failure comes from the light source and the photodiode. Another advantage is the sensing of the widest range of plant sicknesses, since the photosynthesis system is usually the first thing plant system to be affected by stress (except for mechanical damage). Another advantage is the high degree of confidence in the technique, since very little information processing is required.

As a design project for EGM 4000, the SPHS seems to be one of the more promising. More research will have to be done in the area of spectroscopic design and in the effects of stresses on the photosynthetic system. Once a satisfactory system is built, a program will have to be written that will gather data from the spectroscopic sensor and store it in a file that can be accessed by the plant health analysis. The actual programming will be very simple, for it will only have to compare a single measurement to a database of stored reference measurement, and from this draw a true/false conclusion as to the health of the individual plant.

CONCLUSION

After careful consideration, the last three technologies discussed were chosen for design projects next semester. Hopefully, they will provide useful information about sensing plant health as well as detecting disease in plants at an early stage. By the time long-term space flight is possible a highly automated sensing system must be workable that can maintain the health of the crops without the need for human intervention.

The plans for next semester include planting four of the crops considered for growth in space in a growth chamber that has already been constructed. The crops are potatoes, dwarf wheat, soybeans and lettuce. We will use the black and white video image processor to measure the growth rate in the stages from seedlings to full grown plants. Also the chlorophyll level monitor will be constructed. Healthy and diseased plants will be tested using this device as well as performing stimulus response experiments. The results will be documented and analyzed with the help and advice from experts. The results from these experiments will be successful and progress will be made in the area of plant health and disease sensing.

REFERENCES

1. Jones, Dr. Pierce. 1987. Personal communication. Dept. of Agricultural Engineering, University of Florida.

2. Allen, Dr. Hartwell. 1987. Personal communication. Dept. of Agronomy, University of Florida.

3. Cunningham, L., and H. Freiser. 1986. Coated-wire ion-selective electrodes. In Fundamentals and Applications of Chemical Sensors. D. Schuetzle and R. Hammerle, eds. American Chemical Society, Washington, D.C.

4. Mix, Paul E. 1987. Introduction to Nondestructive Testing. John Wiley & Sons, New York, New York.

5. Chien, S., and Ho, C. (eds.). 1986. NMR in Biology and Medicine. Raven Press, New York, New York.

6. Polk, Charles. 1986. Introduction. In CRC Handbook of Biological Effects of Electromagnetic Fields. Polk, Charles, and Postow, Elliot, (eds.). CRC Press, Inc. Boca Raton, Florida.

7. Miller, Morton W. 1986. Extremely Low Frequency (ELF) Electrical Fields: Experimental Work on Biological Effects. In CRC Handbook of Biological Effects of Electromagnetic Fields. Polk, Charles, and Postow, Elliot, (eds.). CRC Press, Inc. Boca Raton, Florida.

8. Frankel, Richard B. 1986. Biological Effects of Static Magnetic Fields. In CRC Handbook of Biological Effects of Electromagnetic Fields. Polk, Charles, and Postow, Elliot, (eds.). CRC Press, Inc. Boca Raton, Florida.

9. Barnes, Frank S. 1986. Interaction of DC Electric Fields with Living Matter. In CRC Handbook of Biological Effects of Electromagnetic Fields. Polk, Charles, and Postow, Elliot, (eds.). CRC Press, Inc. Boca Raton, Florida.

10. Banford, Dr. Amanda. 1987. Personal communication. Dept. of Botany, University of Florida.

11. Christian, Gary D., and Feldman, Fredric J. 1970. Atomic Absorption Spectroscopy: Applications in Agriculture, Biology, and Medicine. Wiley Interscience, New York, New York.

12. American Society for Testing Materials. 1959. Symposium on Spectroscopy. Third Pacific Area National Meeting; Oct. 12-15, 1959. ASTM Technical Publication.

13. James, J. F., and Sternberg, R. S. 1969. The Design of Optical Spectrometers. Chapman and Hall Ltd, London.

14. Bally, E. C. C. 1927. Spectroscopy. Longmans, Green, and Co., New York, New York.

15. Street, H. E., and Cockburn, W. 1972. Plant Metabolism. Pergamon Press. Oxford, England.

16. Jursinic, Paul, and Dennenberg, Ronald. 1985. Reconciliation of the absorption change at 325 nm and other flash-yield determination of concentrations of active Photosystem II centers. Archives of Biochemistry and Biophysics. 241:540-549.

17. Comber, Norman M. 1968. An Introduction to Agricultural Chemistry. Edward Arnold and Co, London.

18. Kabata-Pendias, Alina, and Henryk Pendias. 1982. Trace Elements in Soil and Plants. CRC Press, Inc., Boca Raton, Florida.

19. Koch, Dr. Karen. 1987. Personal communication. Dept. of Fruit Crops, University of Florida.

20. Krause, G. Heinrich, and Weis, Englebert. 1984. Chlorophyll Fluorescence as a tool in Plant Physiology. Photosynthesis Research. 5:139-157.

21. Fraser, D., Colbow, K., Popovic, R., and Vidaver, W. 1987. Oxygen quenching of chlorophyll fluorescence in barley leaves at various irradiances. Photosynthetica. 21:76-81.

22. Prange, Robert K. 1986. Chlorophyll fluorescence in vivo as an indicator of water stress in potato leaves. American Potato Journal. 63:325-333.

23. Wong, Suan-Chin, and Woo, K. C. 1986. Simultaneous measurements of steady state Chlorophyll a fluorescence and CO2 assimilation in leaves. Plant Physiology. 80:877-884.

24. Schreiber, Urlich, and Schliwa, Urlich. 1987. A solid-state, portable instrument for measurement of chlorophyll luminescence induction in plants. Photosynthesis Research. 11:173-182.

N89-24019

MICROGRAVITY PARTICLE REDUCTION SYSTEM

Prepared by

Vanessa Brandon
Michelle Joslin
Lili Mateo
Tracey Tubbs

SUMMARY

The Controlled Ecological Life Support System (CELSS) project, sponsored by NASA, is assembling the knowledge required to design, construct, and operate a system which will grow and process higher plants in space for the consumption by crew members of a space station on a long term space mission. This report addresses the problem of processing dry granular organic materials in microgravity. For the purpose of research and testing, wheat was chosen as the granular material to be ground into flour.

This report describes several possible systems which were devised to transport wheat grains into the food processor, mill the wheat into flour, and transport the flour to the food preparation system. The systems were analyzed and compared and two satisfactory systems were chosen.

Prototypes of the two preferred systems are to be fabricated next semester. They will be tested under simulated microgravity conditions and revised for maximum effectiveness.

TABLE OF CONTENTS

Introduction.....119
Problem Description.....119
Design Criteria.....119
Background Information.....120

Concepts and Designs.....122
Preliminary Designs.....122
Corrugated Treads.....122
Meshing Worm Gears.....123
Disc Grinders.....124
Double-ended Blending System.....125
Proposed Final Designs.....126
Blending Chamber.....126
Circular Track.....127

Results to Date.....130

Plans for Second Semester Effort.....131

References.....132

Appendix A.....133
Appendix B.....134

INTRODUCTION

Problem Description

An integral part of the CELSS project is food processing. Most of the higher plants that will be grown in CELSS will require complex food processing methods to form edible biomass into usable forms for food preparation in microgravity. Some examples are soybeans processed into soybean flakes for meat preparation, sweet potatoes mashed for dessert dishes, and wheat grains milled to flour for bread. This report addresses the problem of processing dry granular organic material in microgravity. Transporting, milling, and cleaning are some major problems to be solved.

It is assumed that the wheat has already been grown, harvested, separated for edible biomass, cleaned, and stored in a closed container. The goal of this project is to design a system to transport the grains to the mill, mill the wheat into flour, transport the flour to the food preparation station, and flush the processor for cleansing purposes.

Design Criteria

The design criteria are as follows:

1. The system must be in a sealed chamber and operate in a microgravity environment.
2. The system must be capable of batch processing approximately fifteen liters of wheat per day in order to provide each of the eight crew members with 2500 calories daily [Appendix A].
3. The system must be programmable and provide flexibility to adapt to different food preparation processes.
4. Materials used must be nonreactive and noncorrosive with respect to the chamber environment.
5. Volume and mass of the materials and equipment used should be minimized and optimized without compromising the design goals.

6. The noise and vibration should be minimized and lie within the range authorized by the NASA guidelines.
7. The system must have an effective cleaning process to avoid bacteria growth.
8. The air-to-flour ratio must remain below explosive levels and static electricity must be minimized.
9. The system must operate with minimal user interaction, servicing, and maintenance.

Background Information

Very little research has been done on food processing in microgravity. This research must be done in order to evaluate the applicability of this process for a regenerative life support system. Most of the research and fabrication which has been previously completed led to systems which far exceeded mass and volume constraints.

The current search for ways to grind dry granular materials in a low gravity environment began with an investigation of the methods used on earth by commercial flour milling factories and household milling appliances. The primary method of large-scale commercial flour milling is a system consisting of many pairs of closely-spaced corrugated cylindrical rollers. The rollers turn rapidly about their longitudinal axes with one roller of each pair turning faster than the other producing a shear to aid grinding. The wheat falls into the first pair of rollers and is coarsely ground. It then falls into the next set of rollers and is more finely ground. This process continues through several sets of rollers until the desired particle size is obtained.

Household milling devices were also studied. Household flour mills and coffee grinders are simple devices which grind in the same way as a household blender. However, in home mills, the blade is flat, not curved like a blender blade. Household

blenders and corrugated rollers rely on gravity for particle reduction and movement, so neither can be used "as is" in low gravity. These ideas may be altered and incorporated into a system which will function in microgravity.

Preliminary Designs

Corrugated Treads. Industrial milling systems which use corrugated rollers can be adapted to operate in microgravity. The basic structure of an adapted system (Figure 1) consists of a series of treadmills. The treads are corrugated by cutting grooves, perpendicular to the path of the wheat, in a thin metal sheet which forms the surface of the treadmill. Each successive tread is more finely corrugated to cut the wheat into smaller particles. Each treadmill in the series is meshed with another treadmill which turns in an opposite direction and at a different speed to produce a shear force as well as a normal force. Presumably, the wheat could be blown into the tread system from a storage area using an inert gas. According to Telesat, a satellite company which has designed a "space oven" which will be discussed later, an inert gas may be used in order to avoid explosions caused by critical mixtures of oxygen and flour dust and static electricity. At the end of the series of treads, a vacuum system could move the flour into a storage container.

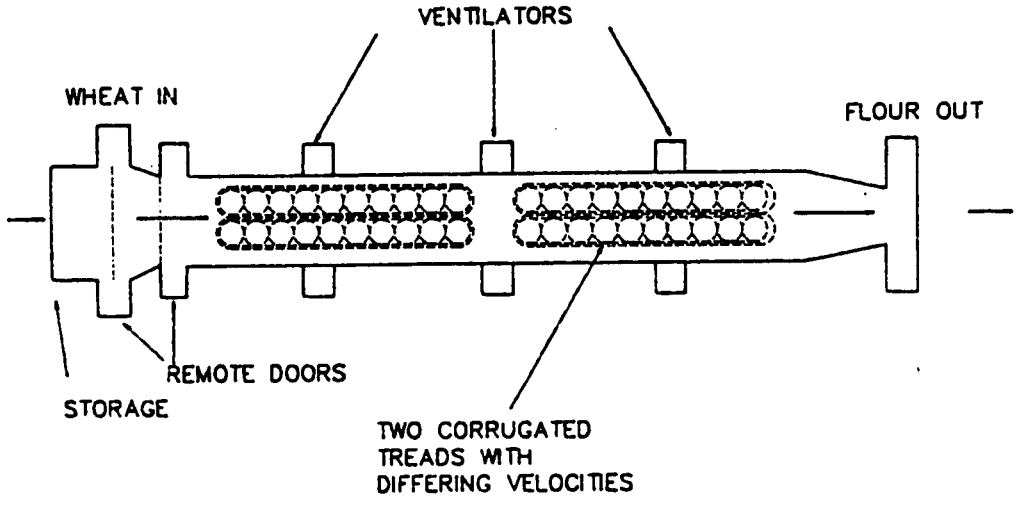

Figure 1. Corrugated Tread Milling System

A primary benefit of this tread system is successive particle reduction. The treads produce fine particles of consistent size. The advantage of the system for application in a low gravity environment is the flow induced by the rotating treads. This flow aids the movement of particles towards the storage container.

Disadvantages of this system are evident. First, metals satisfactory for the construction of this system would probably result in the system's weight exceeding acceptable values. Also, the structure of the system does not allow for easy control of the volume of wheat to be ground. Additionally, cleaning the system may be difficult due to the tendency of particles to lodge in the grooves of the treads.

This system was not tested due to the unavailability of materials required and cost limitations. However, detailed analysis of the system indicates that problems with the system would probably make it an inefficient choice for milling on a space station.

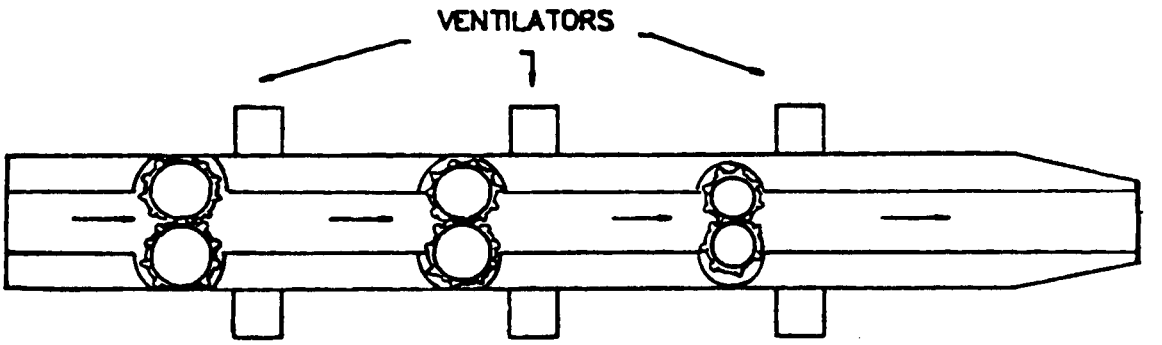

Figure 2. Worm Gear Milling System

Meshing Worm Gears. A series of meshing worm gears can be used as an alternative grinding method to the corrugated treads. This grinding system consists of a series of gear pairs of decreasing diameter (Figure 2). This method also has the

advantages of inducing flow of the particles and producing particles of consistent size. However, the gears would likely exceed the maximum allowable weight of the system.

A system of meshing worm gears was not practical for testing due to the cost and difficulty involved in fabricating gears. An analysis of this system led to the conclusion that, like the corrugated tread system, it is not an efficient method for use on a long term space mission.

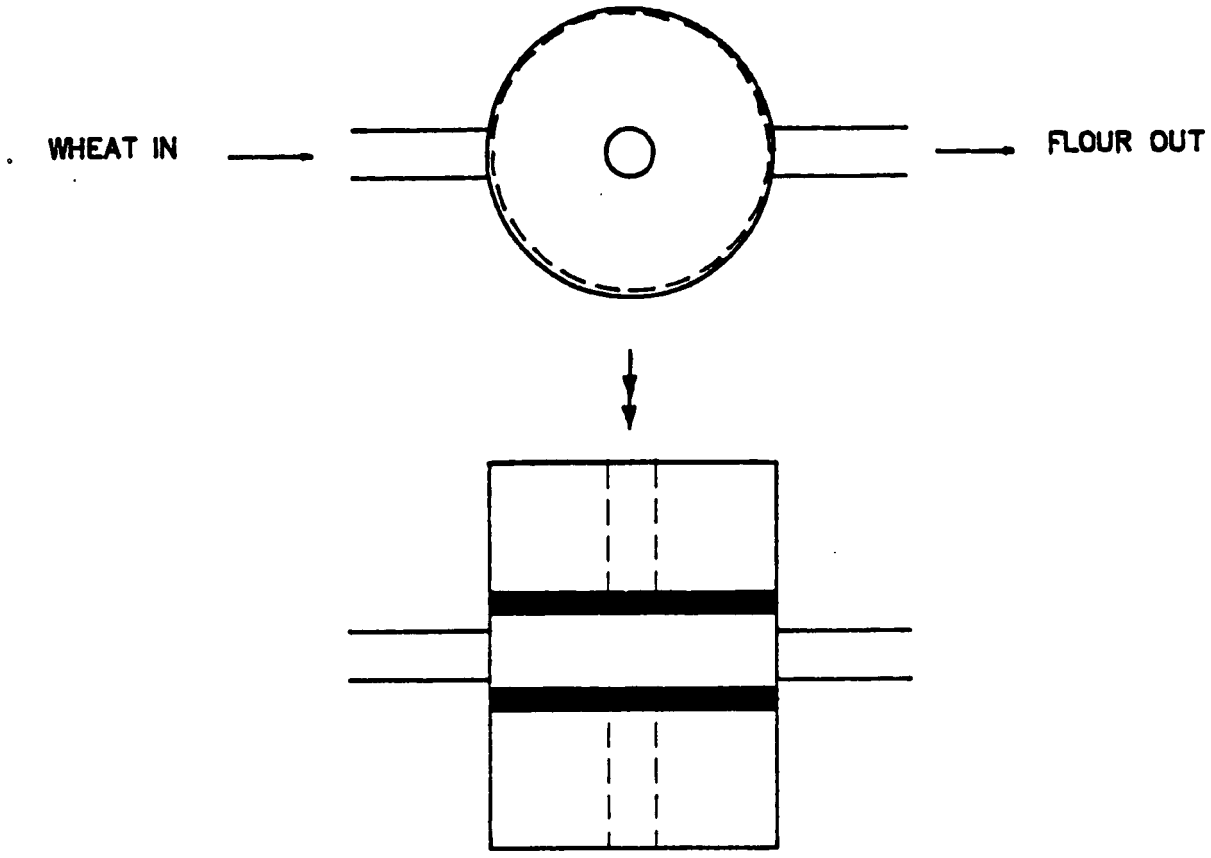

Figure 3. Disc Grinder Milling System

Disc Grinders. Another method considered for grinding wheat consists of rotating corrugated discs (Figure 3). Wheat is blown into the closed container which houses the discs. The discs are then forced together and rotated using shafts. The discs rotate in opposite directions and with different velocities producing a shear force which grinds the wheat.

This system has the advantage of weighing less than the corrugated tread system or worm gear system. However, the major disadvantage of this system is that it can only grind a small volume of wheat per batch compared to the amount which could be ground by the other systems. During small-scale testing, metal particles were chipped off the grinding disks, thus providing a possible source of contaminants. It was concluded that disc grinders were an inefficient method of grinding wheat if large volume output is desired.

Double-ended Blending System. A system adapted from household wheat mills, coffee grinders, and blenders was analyzed for low gravity particle reduction. In conventional systems, the Earth's gravitational field forces the unground wheat to contact the blades at the base of the blender. In low gravity the wheat may float freely about the container without contacting the blades. To simulate low gravity, a horizontal grinding container was designed (Figure 4). It was hypothesized that if the container was filled, rapidly rotating blades might induce a circulating flow of ground and unground material towards the blades. Thus, even in low gravity, all the wheat in the container would be ground.

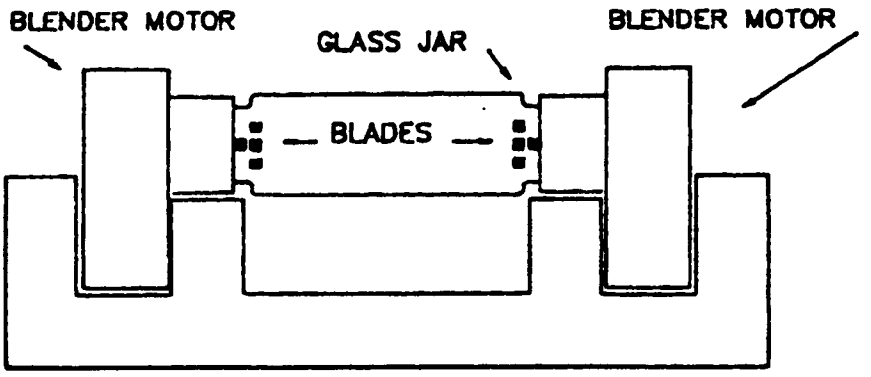

Figure 4. Double-ended Blending System

For testing, the container was filled six-sevenths full of wheat grains and household blenders were attached to each end of the container. Test results showed that the hypothesis was invalid. No flow was induced and only the wheat within about two inches of the blades was ground. The results of this test led to the design of a grinding method in which a shaft with multiple blades replaces the single blade. Systems using multiple blades as the grinding mechanism are presented in the next section.

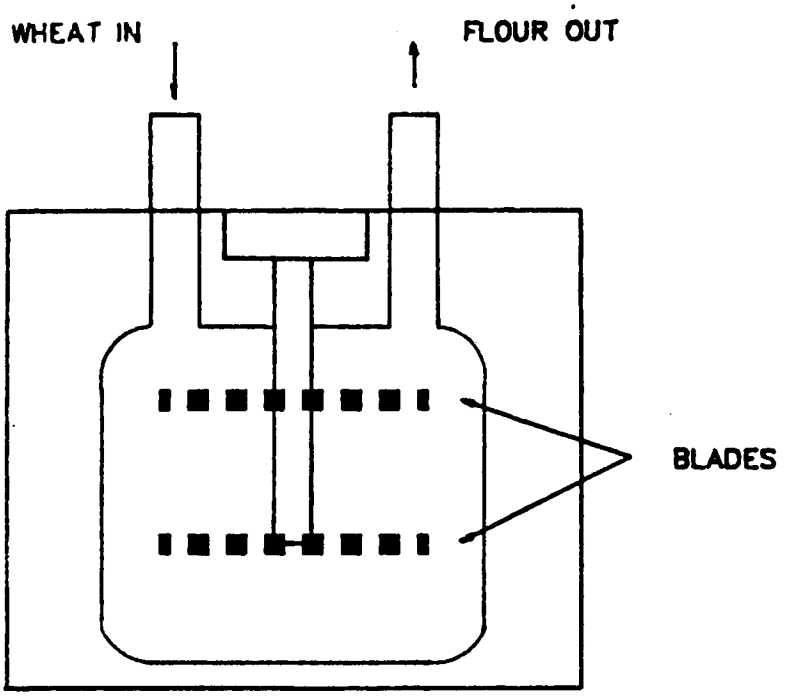

Figure 5. Blending Chamber Design

Proposed Final Designs

Blending Chamber. The blending method was chosen as the most effective of the preliminary designs. The double-ended blending system failed to grind the wheat grains in the central area of the container. The system presented solves this problem by incorporating multiple blades on a rotating shaft which extends to the base of the container (Figure 5). The

blades are flat and extend across the diameter of the container, leaving a clearance for rotation. The use of flat blades was suggested by Doug Bonebrake, an expert on milling systems. The optimal blade length and container size have not yet been determined, but may also depend on the amount of flour required per day by the crew. Preliminary calculations indicate that the system must be capable of batch processing approximately fifteen liters of wheat grain daily for the consumption of eight astronauts [Appendix A].

Based on the test results of the double-ended blending chamber detailed in the previous section, it was concluded that the blending chamber must be filled approximately six-sevenths full for effective grinding in microgravity, if a system of this type is used. The wheat grains would be blown into the chamber using an inert gas, to deter explosions due to static build up, and excess gas is vacuumed out through a filter attachment. When grinding is complete, the flour is vacuumed to the food preparation site.

Circular Track. A new system was designed which minimizes the volume and energy required by the food processing equipment, and also decreases the problems involved with transporting the wheat and flour in low gravity. Instead of transporting by blowing, the entire closed container can be moved along a circular track (Figure 6). The circular track has six ports, each having a particular function. The container travels along the circular track by means of a programmable motor and stops at each port. First, at Port 1, a pre-measured volume will be inserted into the container by blowing. Then the container travels to Port 2 where the multiple-bladed shaft is inserted and milling is performed. At Ports 3 and 4, food preparation systems can be installed. The container is emptied at Port 5. Finally, at Port 6, the container is cleansed by a high pressure inert gas purging method.

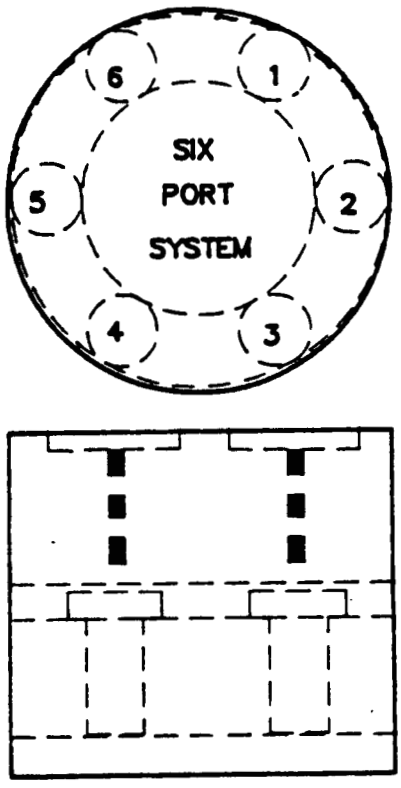

Figure 6. Circular Track Blending System

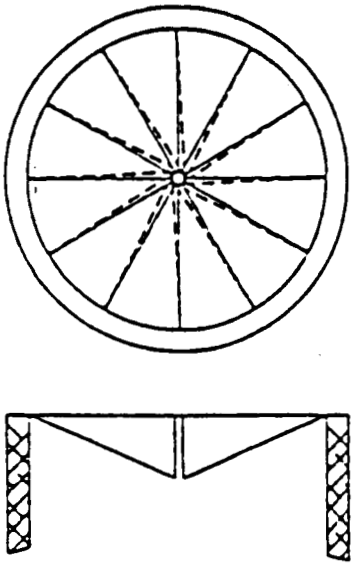

Figure 7. Rubber Gate Port Cover

Leakage is a critical problem to be considered in this system. The mechanisms which perform the functions at each port must be inserted into the container without permitting leakage. One possible solution has been tested to date. The rubber gate (Figure 7) was attached to the end of a full container of flour. To test the effectiveness of the rubber gate in preventing leakage, the container was then inverted and a shaft inserted into and withdrawn from the container. The only flour which leaked out was the small amount resting on top of the shaft. Further ideas for container openings are being developed and will be considered next semester.

The bladed shaft also requires special adaptation for use in this system. In order for the shaft to be inserted through the gate, the blades need to retract. This function may be accomplished by a spring hinge which allows the blades to be extended only when they are rotating rapidly. The rate of rotation of the bladed shaft has also been studied. A rate of at least 12,000 rpm is needed to ensure an efficient milling operation.

One important advantage of the circular track system is its versatility. It was designed so that further food processing operations may be easily performed. For example, Telesat, a communications satellite manufacturer based in Toronto, Canada, has designed and built an oven for baking bread in low gravity. If this oven is proven effective after low-gravity testing, it could be placed in the track system at Port 4. Port 3 would be designed to add water to the flour and mix the dough. Further information on this space oven may be obtained next semester.

RESULTS TO DATE

The research and testing completed to date has led to the design of two seemingly appropriate systems for use as microgravity food processors, the blending chamber and the circular track system. Both systems satisfy the design criteria and seem to satisfy the restraints placed on any equipment which must operate in low gravity. However, problems with these systems may not be apparent until they are built and tested.

PLANS FOR SECOND SEMESTER EFFORT

The primary objective for next semester is to fabricate a complete prototype system for processing dry granular materials in microgravity. The proposed solutions discussed in this report are the candidate designs for fabrication. The current plan is to construct the blending equipment, container, and gasket opening in order to evaluate the efficiency of blending and the prevention of leakage of particles upon equipment retraction. This prototype will then be altered to produce results within the project guidelines.

Once the blending operation is refined, the problem of building the transport system for the grains and flour will be approached. Finally, a cleansing method for the entire system will be developed. Fabrication of the final system will involve further research as problems arise and time will be allowed for altering and testing the system for low gravity applications.

REFERENCES

1. Bates, Dr. Robert. 1987. Personal communication. Department of Food Science and Human Nutrition, University of Florida, Gainesville, Florida.

2. Bonebrake, Doug. 1987. Personal communication. Mother Earth Family Market, Gainesville, Florida.

3. Drum, Richard. 1987. Personal communication. Bay State Milling, Indiantown, Florida.

4. EGM 4000 Class Report. 1987. Design of Components for Regenerative Systems for Growing Higher Plants in Space. Department of Engineering Sciences, College of Engineering, University of Florida, Gainesville, Florida.

5. Gustan, E., and Vinopal, T. 1982. Controlled Ecological Life Support Systems: Transportation Analysis. NASA Contract Report 166420.

6. Inglett, G. E. 1974. Wheat: Production and Utilization. Avi Publishing Co., Westport, Connecticut.

7. The National Association of British and Irish Millers. 1977. The Practice of Flour Milling. National Joint Council, London, England.

8. Peterson, R.F. 1965. Wheat. Grampian Press Ltd. London, England.

9. Stoate, David. 1981. The Miller's Manual. David Stoate, Bristol, England.

APPENDIX A

CALCULATIONS FOR DAILY FLOUR PRODUCTION

In reference to Table 30 (Appendix B), the minimum quantity of flour needed for a 2505 kcal per person per day diet is calculated as follows:

$$\frac{(681 \text{ kcal})}{(405 \text{ g wheat})} = 1.68 \text{ kcal/g wheat}$$

$$\frac{(2505 \text{ kcal/day})}{(1.68 \text{ kcal/g wheat})} = 1491 \text{ g wheat/day}$$

$1491 \text{ g/day} * 8 \text{ people} = 11.928 \text{ kg/day}$

$48 \text{ lb/ft}^3 = \text{density of wheat}$

$(11.928 \text{ kg/day}) * (1 \text{ lb}/0.4536 \text{ kg}) * (\text{ft}^3/48 \text{ lb}) = 0.5478 \text{ ft}^3/\text{day}$

$(0.5478 \text{ ft}^3/\text{day}) * (2.8317 \times 10^{-2} \text{ m}^3/\text{ft}^3) = 0.0155 \text{ m}^3/\text{day}$

$(0.0155 \text{ m}^3/\text{day}) * (100^3 \text{ cm}^3/\text{m}^3) * (1 \text{ ml}/1 \text{ cm}^3) = 15{,}500 \text{ ml/day}$

Amount of wheat needed per day for 8 people if only wheat is eaten is 15.5 liters per day.

Table 30. An Example of a "Modest" Diet Scenario, the so-called "Minimum" Diet (Quantities per person per day).

Species	No. of Servings	Weight as served, g	Food Energy, kcal	Protein, g	Fat, g	Carbohydrate, g	Calcium, mg	Magnesium, mg	Phosphorus, mg	Sodium, mg	Potassium, mg	Iron, mg	Vitamin A, IU	Thiamin, mg	Riboflavin, mg	Niacin, mg	Ascorbic Acid, mg
Soybean	2	180	234	19.8	10.2	19.4	131	58	322	4	971	4.9	50	0.38	0.16	1.1	-
Dry bean	2	190	212	14.0	1.0	38.2	90	72	265	12	746	4.9	-	0.41	0.14	1.5	-
Peanut	2	72	419	18.9	35.1	14.9	54	126	293	2	504	1.6	-	0.23	0.10	12.3	-
Wheat	6	405	681	25.2	2.7	141.9	81	326	810	-	351	5.4	-	0.21	0.12	9.6	-
Rice	4	390	464	9.8	2.4	99.4	46	113	284	-	274	2.0	-	0.36	0.08	5.4	-
Potato	4	600	416	11.6	0.4	93.2	40	132	282	8	2224	3.2	-	0.48	0.20	0.8	88
Carrot	1/4	19	6	0.2	0.1	1.3	6	5	6	6	41	0.1	1903	0.01	0.01	0.1	1
Chard	1/4	22	4	0.4	0.1	0.8	16	15	5	19	70	0.4	1182	0.02	0.05	0.1	4
Cabbage	1	145	29	1.6	0.3	6.2	64	19	29	20	336	0.4	180	0.06	0.06	0.4	48
Tomato	2	200	40	2.0	0.4	8.6	24	28	50	6	444	1.0	1640	0.10	0.08	1.2	42
Totals		2223	2505	103.5	52.7	324.1	552	762	2346	77	4999	23.9	4955	2.26	1.00	32.5	183
Percent of RDA			93	185			69	218	293	5	(150)	170	100	101	63	181	305
Caloric Distribution, %				15	20	65											

OVERALL CONCLUSION

Good progress was made this semester on the topics studied. The design for variable spacing between soybean plants is adaptable to a number of plant, and allows for seeding, harvesting, and refurbishment mechanisms. Initial calculations indicate that using the tray and chamber configurations developed, a substantial reduction in the volume needed for the growth of a soybean crop was achieved.

During the development of the automated seeding design, it was found that the direct charging of wheat seeds with electricity is not practical. The seeds did move within an electric field when placed in air, thereby recommending this technique for seed movement to a planting device. A mechanical technique which used the difference in pressure between the inside and outside of a container to hold seeds before transfer to a planting device was developed. The development of a gear-head seeder met with moderate success.

The three plant health sensing technologies chosen for further investigation show great promise for fulfilling the needs for a good remote sensing technique in the production of food crops in space habitats.

The problem of processing food grains in microgravity will involve the careful management of the materials, and the design of a closed container with sequential processing steps should fulfill that need.

The implementation of the designs developed this semester will be the focus of next semester. The quality of the people involved and their enthusiasm for the project should made next semester's work as successful as this one.

APPENDIX B

EGM 4001 Class Report

Design of Components for Growing Higher Plants in Space

May 1988

DESIGN OF COMPONENTS FOR GROWING HIGHER PLANTS IN SPACE

Prepared for

National Aeronautics and Space Administration
Kennedy Space Center, Florida

Universities Space Research Association

May 1988

Prepared by

EGM 4000/1 Engineering Design

Department of Aerospace Engineering,
Mechanics and Engineering Sciences

(Formerly Department of Engineering Sciences)

University of Florida

Gainesville, Florida 32611
(904) 392-0961

Instructor

Dr. Gale E. Nevill, Jr.

EXECUTIVE SUMMARY

The goal of the Spring 1988 semester of EGM 4001 was the fabrication and testing of the concepts and designs from the previous semester. The designs were chosen to contribute to the development of NASA's Controlled Ecological Life Support System (CELSS). The areas investigated were automated seeding of plants, the remote sensing of plant health and particle reduction of food products in microgravity.

The automated seeding group fabricated and tested four prototype seeding systems. The mechanical seeders that were fabricated relied on the minnow bucket seeder concept, which entailed using pressure differences to trap seeds for separation and planting. The electrical seeder employed an electrostatic seed separation and pneumatic implantation system.

The remote sensing group chose to fabricate and test an absorption spectrometer used to measure chlorophyll levels in plants. Chlorophyll levels in a plant are a general indicator of plant health. Data was taken and compared to healthy plant chlorophyll levels to determine the relative vitality of the plant.

The particle reduction group devised a blending system using retractable blades. The effects of particle reduction in microgravity was simulated and compiled. The final concept was a circular track consisting of six ports, each with a specific processing function. Only the particle reduction port was fabricated and tested.

The EGM 4000/1 class feels NASA has benefitted significantly from this cooperative venture. NASA received the interest and enthusiasm of engineering students, and has made contact with many potential professional employees. Fabrication and testing of projects will continue over the summer. The experience obtained by the class will prove invaluable to any future endeavors.

ACKNOWLEDGEMENTS

The EGM 4000/1 Engineering Design class expresses its sincerest gratitude in acknowledging the following persons for the guidance and expertise that each one has lent to the final report.

Mr. Ron Brown, Department of Engineering Sciences, University of Florida.

Mr. Alex Clem, Physics Assistant, Department of Physics, University of Florida.

Mr. Ray Frier, Department of Engineering Sciences, University of Florida.

Dr. David Jenkins, Department of Engineering Sciences, University of Florida.

The members of the EGM 4000/1 Engineering Design Class appreciate the cooperation of the National Aeronautics and Space Administration, particularly the following persons:

Dr. William Knott
Mr. Bruce Larsen
Mr. Dennis Matthews
Mr. Ralph Prince
Dr. John Sager

In addition, the supporting grant from the Universities Space Research Association is appreciated.

The excellent assistance of Jeff Bohren and Kent Tambling is heartily appreciated.

Finally, special thanks to Dr. Gale Nevill, Jr., for his support and guidance throughout the semester.

EGM 4001 Design Class

Jim Bledsoe
Vanessa Brandon
Ray Garcia
Javier Herrera
Scott Holcomb
Michelle Joslin
Paul Kelly
Ara Manukian
Lili Mateo
Scott Myers
Michael Pearce
Manny Rosendo
Herb Sivitz
Tracey Tubbs
Lee Weiss
David Wolsefer

Jeff Bohren
(Graduate Assistant)

Kent Tambling
(Teaching Assistant)

TABLE OF CONTENTS

Introduction.....6
Background.....6
Class Goals.....6
Class Organization.....6
Future Organization.....7
Report Structure.....7

Individual Group Reports.....9
Automated Seed Manipulation and Planting.....9
Plant Health Sensing.....46
Particle Reduction in Microgravity.....103

Overall Conclusions.....121

INTRODUCTION

Background

The EGM 4001 Design class of the University of Florida is working in conjunction with the National Aeronautics and Space Administration (NASA) and the Controlled Ecological Life Support System (CELSS) Project at Kennedy Space Center (KSC) on aspects of a regenerative life support system to grow higher plants in space. This collaboration has been in effect for the past three years, and this report summarizes the design efforts of the class during the Spring 1988 semester.

Class Goals

The decision made was to further the fabrication and testing of the concepts and designs from the previous semester. Each Design group chose those ideas they felt would be most beneficial and successful as final projects.

The main goal for the class was to ultimately create a working prototype to test and possibly obtain useful information which NASA could apply to their CELSS Project. Specific goals were developed for each individual project and are stated in the group reports.

Class Organization

The Fall semester ended with the class divided into four design groups. From a reorganization due to a smaller class size and the reevaluation of individual group interests, the Spring semester continued with only three groups. The groups that continued in this semester were the seeder group, the plant health sensing group and the particle reduction group.

As a general outline of the time schedule, the design groups, within the first few weeks, began the fabrication of the

projects chosen. In next two months the groups continued to build, test, then rebuild, the models. By the end of the semester, final designs and models were tested and conclusions were drawn and submitted as this final report.

Future Organization

Due to the enthusiasm of several students in the 1987/88 Design class, project research and design will continue throughout the summer, even though this is the last required semester for the class.

Report Structure

The remainder of this report is divided into three sections comprised of the three group reports. Following this is the overall conclusions and class recommendations.

N89-24020

AUTOMATED SEED MANIPULATION AND PLANTING

Prepared by

Ray Garcia
Javier Herrera
Scott Holcomb
Paul Kelly
Scott Myers
Manny Rosendo
Herbert Sivitz
Dave Wolsefer

PRECEDING PAGE BLANK NOT FILMED

SUMMARY

The Automated Seed Manipulation and Planting Group was formed to develop a system for safe seed separation, acquisition, and planting operations for the Controlled Ecological Life Support System (CELSS) project currently under development at NASA's Kennedy Space Center.

The seeding systems constructed and tested during the Spring Semester, 1988 were diverse and indicated promise for future development.

The Mechanical Division fabricated three seed separators utilizing pressure gradients to move and separate wheat seeds. These separators are called "minnow buckets" and use air, water, or a combination of both to generate the pressure gradient.

Electrostatic fields were employed in the seed separator constructed by the Electrical Division. This separator operates by forcing a temporary electric dipole on the wheat seeds and using charged electrodes to attract and move the seeds.

Seed delivery to the hydroponic growth tray is accomplished by the seed cassette. The cassette is compatible with all the seed separators, and it consists of a plastic tube threaded with millipore filter paper. During planting operations, the seeds are placed in an empty cassette. The loaded cassette is then placed in the growth tray and nutrient solution provided. The solution wets the filter paper and capillary action draws the nutrients up to feed the seeds.

These seeding systems were tested and showed encouraging results. Seeds were effectively separated and the cassette can support the growth of wheat plants. Problems remaining to be investigated include improving the success of delivering the seeds to the cassette and providing adequate spacing between seeds for the electric separator.

TABLE OF CONTENTS

INTRODUCTION.....13
Problem Definition.....13
Design Criteria.....14

MECHANICAL SEEDERS.....16
MINNOW BUCKET SEEDER ONE (MBS-1).....16
Concepts and Designs.....16
Seed Capture Holes.....17
MBS-1 Pneumatics.....18
Tangential Flow.....18
Main Air Flow.....18
Seed Blower.....19
Seed Cassette.....20
Planting Operations.....21
Results to Date.....22
Recommendations for Future Work.....24

MINNOW BUCKET SEEDER TWO (MBS-2).....26
Concepts and Designs.....26
Experiment 1.....26
Experiment 2.....27
Experiment 3.....27
Experiment 4.....29
Results to Date.....29
Recommendations for Future Development.....29

MINNOW BUCKET SEEDER THREE (MBS-3).....30
Concepts and Designs.....30
End Effector.....31
Water/Seed Separator.....32

Results to Date.....33
Experiment 1.....33
Experiment 2.....33
Experiment 3.....34
Experiment with Water/Seed Separator.....35
Recommendations for Future Development.....35

ELECTRICAL SEEDERS.....36
Concepts and Designs.....36
Electrode Shapes and Field Configurations.....36
Seed Separation and Implantation.....38
Design Improvements.....39
Results to Date.....40
Inhibiting Factors.....40
Recommendations for Future Development.....41
Final Design and Fabrication.....41

APPENDIX A.....42

APPENDIX B.....44

INTRODUCTION

Problem Definition

The ultimate goal of the Controlled Ecological Life Support System (CELSS) project is the construction of a self-contained bioregenerative life support module to provide nutrition for a permanent human presence in space. A critical element required in such a module will be a system to accomplish manipulation and planting of seeds that will be grown to provide food for the crew. This Seed Planting System (SPS) must operate automatically to reduce human involvement in the tedious operations to be described and to preserve probable cleanliness requirements for the growth chamber.

The first requirement for the SPS is the non-damaging separation of the seeds. The design group was instructed to consider the seeds to be stored so that they will be free to move within the container and not housed in individual storage cubicles. In this worst-case scenario, the formidable task of locating and acquiring individual seeds becomes obvious. Since the CELSS module will operate in the micro-gravity environment of space, any contact between a seed and a moving instrument will cause the seed to move away from the object to an undetermined location. As it moves, the seed may strike other seeds, eventually causing a rapid dispersion of seeds and thus making seed location and acquisition a difficult dynamic problem.

Once the seeds have been separated they must be planted. The SPS will safely transfer the seeds from the storage container and deposit them in the pre-determined locations in the growth tray. The ability to exactly plant seeds is necessary for the SPS so the seeds will be in position to receive the proper amounts of light and nutrients. Seeds placed at random in the growth tray are not guaranteed adequate light, nutrients, and space to grow and therefore are not likely to survive.

The SPS must also be capable of planting seeds at a rate sufficient to sustain the humans depending on CELSS. Considerations were made for the possibility that during CELSS module operation, all crops but one become contaminated and unusable. In this situation, the crew must depend solely on the remaining crop for nutrition. Calculations were completed based on the consumption rate necessary for sustenance on a sample crop (in this case, wheat) to determine a maximum planting rate capability for the SPS (Appendix A).

The decision whether to plant the seeds in a wet, germinated state or dry, non-germinated condition has not been definitely settled upon for CELSS. Planting a pre-germinated seed has the advantage of partially ensuring the successful maturation of the seed; however, the germinated seed is a very delicate living organism and extreme care must be taken during planting operations so as not to damage either the seed coat or emerging radical. Dry seeds are much more resistant to physical damage but planting dry seeds increases the possibility that non-viable seeds will take up valuable space in the growth tray. In view of these facts, the SPS should therefore be able to successfully operate and deliver seeds in either a wet or dry condition.

The topics discussed define the ares of major concern in designing an SPS for use in the CELSS module. The ideas and experiments to be presented in this report address these problems and solutions felt to be useful in our future work.

Design Criteria

Following are the design criteria decided upon from research completed during the Fall semester, 1987:

1. SPS must not rely on earth's gravity to accomplish seeding operations.
2. SPS operations should be automated to minimize human involvement.

3. Seed storage containers must allow for freedom of movement of the seeds within the container. This is to demonstrate the worst case scenario for seed location and acquisition.

4. Contact with the seeds by instruments, container, etc. must not inflict damage which would cause the seeds to become non-viable in wet or dry planting.

5. The SPS must plant seeds in specific locations in the growth tray.

6. SPS operations must not contaminate the growth chamber environment by releasing fluids or other material.

7. SPS must be capable of planting seeds at a sufficient rate to support human consumption requirements.

With these design criteria in mind, the Automated Seed Manipulation and Planting Group began construction and testing of seeding system concepts developed during the Fall semester of 1987.

MECHANICAL SEEDERS

MINNOW BUCKET ONE (MBS-1)

Concepts and Designs

The central component of the seeding system is the "minnow bucket." It relies on the pressure gradient generated by a fluid flowing out of small holes in a large container to attract and hold seeds on the holes drilled through the wall of the container. Our minnow bucket (Figure 1) is constructed of a PVC tube with 6 in. radius and 11 in. length. Twenty-four holes were drilled through the wall of the PVC to capture the seeds.

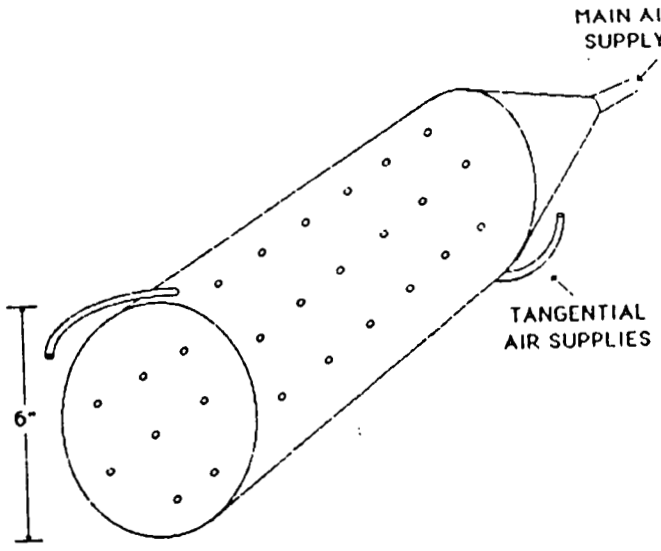

Figure 1. Minnow Bucket One (MBS-1)

On the end opposite the funnel is a clear Lucite cover. It allows observation of seed motion within the minnow bucket and seals one end to force air out of the seed capture holes. A 1 in. hole was drilled through the Lucite and covered with a

rubber diaphragm with radial slits to act as the entrance/exit for the seed cassette.

In order to guide the cassettes and support them as they wait to accept seeds, hooks were installed. The hooks are aluminum and ensure that the cassette is directly beneath a row of seed capture holes.

Seed Capture Holes. The configuration of the seed capture holes is unique (Figure 2). A capture hole is constructed by first drilling a 0.106 in. hole completely through the wall of

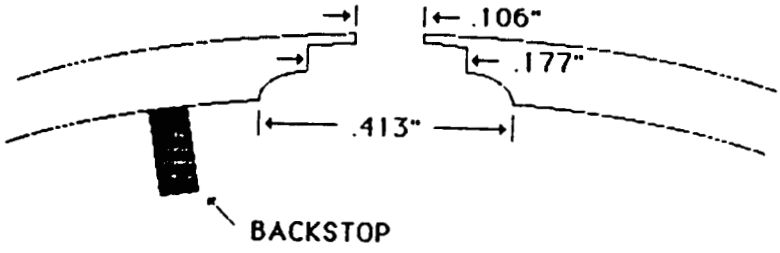

Figure 2. Capture Hole and Backstop

the minnow bucket. Next a 0.177 in. hole is drilled partially through the wall. The 0.177 in. diameter is larger than the diameter of a wheat seed. When the air pressure is provided to the minnow bucket, the seeds try to escape to the outside through the 0.106 in. hole. The 0.106 in. hole prevents their escape however. The seed is now "nested" in the wall of the minnow bucket at a precisely known location. The seed capture holes are completed by using a 0.413 in. drill bit to form a slight depression around the hole. This depression helps guide the seed into the capture hole.

Glued to the inner wall of the minnow bucket behind the seed capture holes are rectangular pieces of neoprene, called

backstops. As the seeds rush along the wall of the minnow bucket, they impact against the backstops. This impact decreases the seed's velocity, allowing the air flow to divert the seed into a seed capture hole. Neoprene was chosen because its spongy character does not damage the seeds during repeated impact. The backstops were determined to be necessary due to problems in testing the seeder. Seeds were only captured by the holes on the bottom half of the minnow bucket. The tangential air flow required to force the seeds completely around the inner wall of the container gave the seeds a velocity that was too great for the seeds to be attracted to the holes by the pressure gradient. In order to show that the seed separation system is "gravity independent" (seeds can be captured regardless of the direction of gravity), seeds must be captured in a row of holes at the top of the minnow bucket. Testing following the installation of backstops resulted in seeds being captured in all the holes, including the top row.

MBS-1 Pneumatics. The pneumatic system of the MBS is the most vital part of seed manipulation. After several different air flow configurations were tried the class members working on MBS 1 decided on the following air system(s).

Tangential Flow: Tangential flow hoses are located on the inside wall at the ends of the MBS. These tangential sources provide a clockwise vortex circulation on the inside wall of the seeder. This serves the primary purpose of moving the seeds to the seed capture holes. The vortex circulation moves the seeds around the wall, into the specially designed "backstops" and then finally into the capture holes.

Main Air Flow: The main enters MBS 1 and diffuses through the funnel at one end. This air flow provides the majority of the pressure gradient holding the seeds to the walls. The increase in pressure provided by the main source forms a

significant pressure gradient that holds the seeds at the top of the MBS-1. The main source is needed in an earth atmosphere because seeds at the top of the MBS need must resist gravity to remain in position. In micro-gravity the need for the main pressure source would be reduced or possibly eliminated and the tangential source would provide a strong enough pressure gradient to hold the seeds in the holes. Micro-gravity will also allow the overall air flow pressure going into the MBS-1 to be decreased. The current testing pressure is approximately 80 psi.

Seed Blower: Another component of the MBS 1 pneumatics is the "seed blower" (Figure 3). The seed blower provides the positive air flow source needed to blow the seeds out of the seed capture holes and into the seed cassette. The prototype seed blower consists of a 15 in. PVC tube and six air openings. The air openings, which are spaced to line up exactly with a row capture holes, contain half inch pieces of vinyl tubing to concentrate the positive air flow into the capture holes.

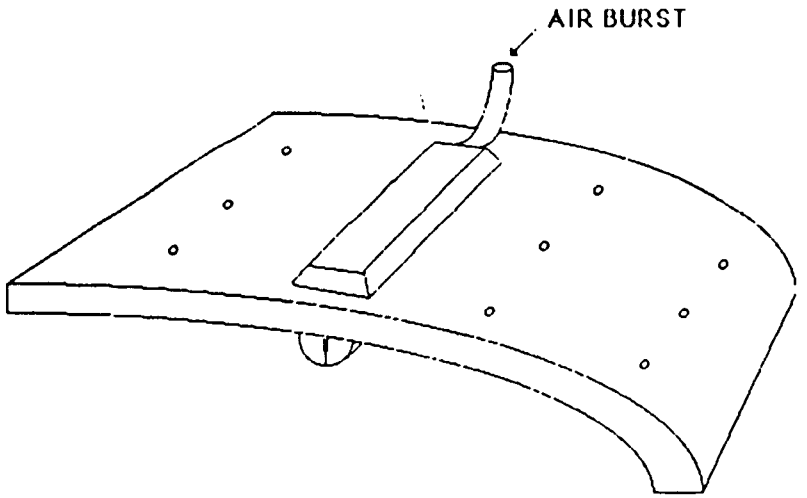

Figure 3. Seed Blower

Seed Cassette: The cassette receives the seeds from the minnow bucket, holds the seeds during transport, and supports the seeds during growth. The cassette consists of 1/2 in. PVC tubing with a 1/4 in. slit cut through the top of the cassette (Figure 4). Filter paper (.45 micron) is threaded through the top of the cassette to form a V-shaped notch. The filter paper serves two purposes. First, it catches the seeds when they are blown off the wall of the minnow bucket. It also allows the nutrient solution to move by capillary action up to feed the seeds and roots.

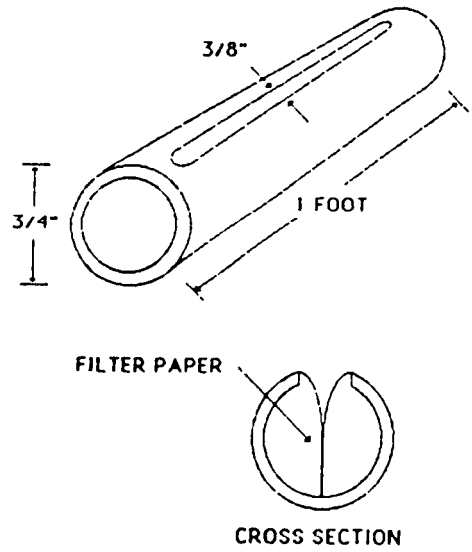

Figure 4. Seed Cassette

This cassette configuration was chosen because it allows different food crops with different spacing requirements to be grown out of the same cassette type. For example, wheat requires very little spacing between plants while lettuce needs much room to grow. This cassette can support the growth of either plant. Also, the cassette relieves the seed delivery system of manipulating and planting only one seed at a time.

The nutrient solution can be pumped into one end of the cassette and withdrawn from the other end. As the nutrient

solution passes through the cassette, the filter paper becomes wet. The seeds draw nutrients from the filter paper to support their growth.

A possible growth tray using seed cassettes is shown in Figure 5. The robot places the loaded cassettes into the individual rows. When the plants are ready to be harvested, the entire cassette/plant unit is removed from the tray and delivered to the harvesting area.

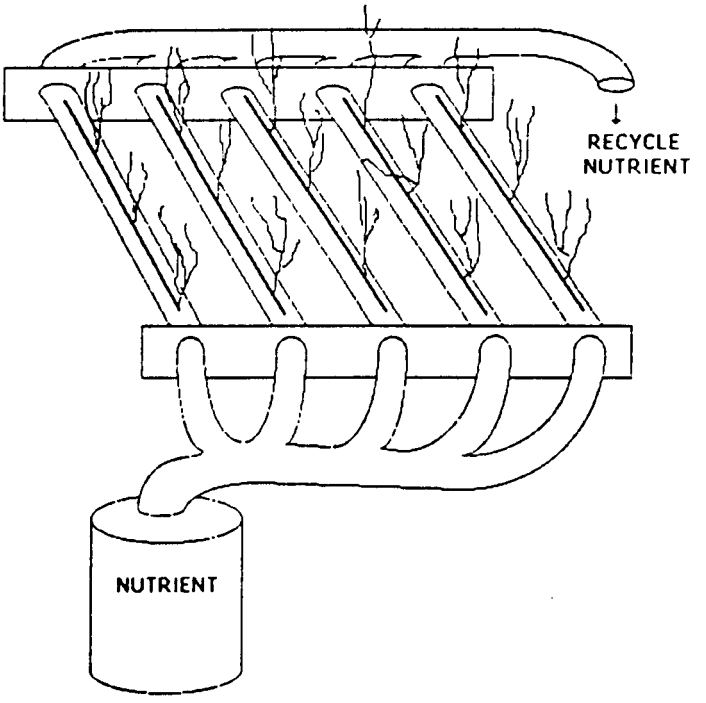

Figure 5. Planting Growth System

Planting Operations. Following are the steps used in planting operations with the described seeding system:

1. Wheat seeds placed into minnow bucket.
2. Air flows turned on to attract seeds to capture holes.
3. Tangential air flows turned off.

4. Empty cassette inserted into minnow bucket directly under a row of capture holes.

5. Burst of positive pressure from outside the minnow bucket forces seeds out of capture holes and into cassette.

6. Loaded cassette withdrawn and placed in germination area or growth tray.

A complete picture of the constructed minnow bucket/cassette system is shown in Figure 6.

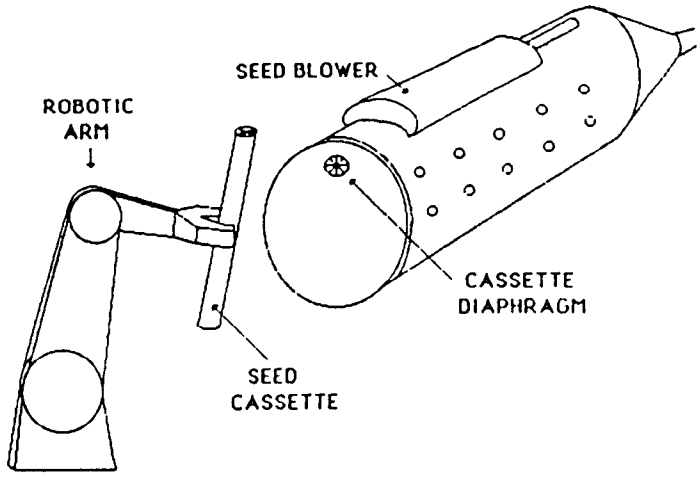

Figure 6. Minnow Bucket with Seed Cassette

Results to Date

After cassette fabrication, seven dry wheat seeds were loaded into a cassette and supplied with Nutri-sol brand nutrient solution to observe their growth. The nutrient solution was pumped continuously through the cassette by an aquarium pump and

returned to the supply bucket to form a closed-loop system. The cassette was placed in the "greenhouse" constructed in the EGM 4001 design room to obtain the necessary light.

The seeds were observed to experience normal growth for two weeks. Time limitations prevented the observation of the wheat's growth to full maturation. It remains to be determined if the volume of the seed cassette is sufficient to contain the roots of the wheat.

Tests were conducted to measure the elapsed time from the start of the air flow to the time when seeds moved to the capture holes (Appendix A). These tests showed that 90% of the holes would capture a seed in an average time of 45.3 seconds. On the average, it took 1:08 minutes for 95% of the holes, and 1:25 minutes for 100% of the holes to acquire seeds. During the tests, however, the minnow bucket split and the funnel attachment dislodged. The epoxy used to connect the minnow bucket and end attachments was not strong enough to withstand the repeated exposure to 80 psi. To correct this, the minnow bucket was re-glued, aluminum hose clamps fabricated and installed to prevent the outward expansion of the minnow bucket, and a French press constructed to resist the tendency for the funnel and Lucite over from uncoupling. The capture tests were redone with significant reductions in the time required to capture seeds. With the safety modifications, the average time for 90% of the holes to acquire seeds was 24.9 seconds. The time required for 95% of the holes was 30 seconds, and 100% of the holes caught seeds after 44.3 seconds.

These results are encouraging since seed damage is minimized when the holes capture seeds quickly. Once the seeds are in the holes, the tangential flow may be turned off and the main air supply pressure reduced. This situation is favorable since the seeds are no longer swirling around and impacting the backstops, minnow bucket wall, and cassette guide hooks.

The seed blower's accuracy at blowing the seeds off the capture holes was tested next (Appendix B). Cassettes with dry

and wet filter paper were loaded. Results indicated that the dry filter paper was too stiff and elastic to accept the seeds. This could be corrected by redesigning the cassette to reduce the amount of contact between the sides of the V-shaped portion of the filter paper.

The wet filter paper caught an average of 5 out of 6 seeds. The water helped to lubricate the filter paper so the seeds could enter more easily. Planting dry seeds into a wet cassette could be advantageous if the planting scenario called for pre-germinated seeds. The wet cassette is an ideal area for the seeds to germinate before planting.

Throughout all the tests, the rubber diaphragm repeatedly failed. The pressure inside the minnow bucket was too great for the rubber material to maintain its shape. The pressure forced the radial slits in the interior and exterior rubber doors to open outward. This provided a huge outward flow pattern that allowed seeds to exit the minnow bucket. For future development, an adequate system to allow the cassette to enter and exit the minnow bucket must be designed. It must prevent the seeds from shooting out of the bucket and still allow the cassette to be inserted.

Recommendations for Future Development

The results of this work have shown that this type of seed separation and planting system is feasible for micro-gravity operations. It would be desirable to have a vision system to "look" in the seed capture holes to determine when the seeds have been captured. The vision system could relay the data (number of holes with seeds) to the computer to determine when to turn off the tangential air flow in preparation for cassette entry.

Improvements required for the current system include design of a cassette entry/exit door system, redesign of the cassette filter paper orientation for dry seed planting, and improving seed blower performance.

It is anticipated that this system would operate more effectively in micro-gravity. The pressure gradient and flow velocity required to separate the seeds would reduce to nearly zero. The positive pressure delivered by the seed blower would also decrease.

The potential applications of this minnow bucket system are intriguing. One minnow bucket-cassette system could be used to separate and plant any type of seed. A minnow bucket could be constructed with rows of holes suited for specific seed types. For instance, a bucket could have holes sized and spaced for wheat, holes sized and spaced for beans, etc. During seeding operations, only the holes that serve the type of seed to be planted could be used. The other holes could be temporarily plugged to prevent seed attraction. A different crop could then be planted by removing the plugs covering its holes and following the described planting operations.

MINNOW BUCKET TWO (MBS-2)

Concepts and Designs

The tube retrieval MBS design is basically a simple MBS with a bracket holding the transport tubes on the inside (Figure 7.) This bracket is approximately 1/4 inch from the inner wall of the MBS. The space allows seeds to enter the transport tubes and exit the MBS. The seed capture holes and the holes of the main bracket are aligned. The main bracket is connected to the rotating block. The MBS is permitted to rotate while the block and bracket remain stationary. This allows any row of the MBS's seed capture holes to position itself over the main bracket.

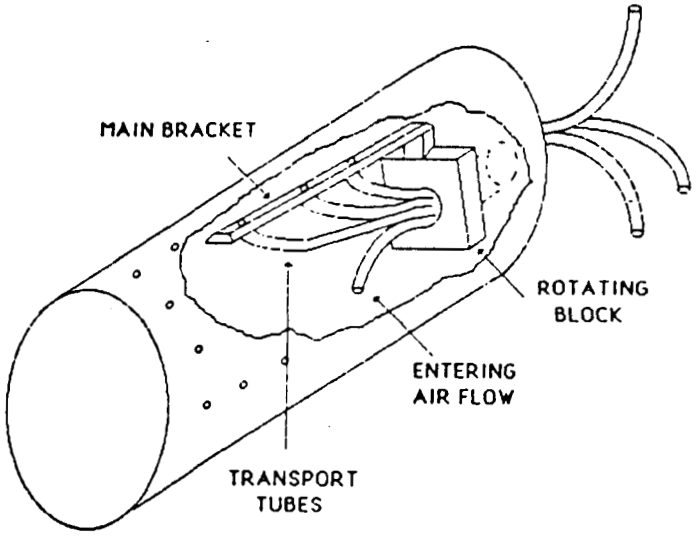

Figure 7. Minnow Bucket Two (MBS-2)

Experiment 1. The experiment consisted of placing approximately forty dry wheat seeds in the MBS. As the seeds migrated to the seed capture holes, the MBS was rotated until the main bracket was directly under a row of seeds. Air was then

blown into the seed capture holes in order to offset the pressure gradient that is holding the seeds in place. The seeds left the seed capture holes and moved tangentially along the MBS inner wall surface and away from the transport tubes. The entering air flow used to set up the pressure gradient caused the seeds to move tangentially away from the transport tube entrance. The main bracket was then brought closer to MBS wall in the hope of improving the results but the same results were observed.

Experiment 2. In order to remedy problems encountered in experiment 1, rows of seed capture holes were drilled with a cone-drill to form a pocket and protect it from the tangential air. Also, the bracket was moved closer to hug the MBS's inner wall. Approximately forty dry wheat seeds were placed inside the MBS. Then air was funneled into the MBS. The results were more favorable, but seventy percent of the seeds were not entering the tubes properly. Losses were due to the tangential air flow, minute misalignment of the main bracket in relation to the MBS's inner wall, and poor design of the cone shaped seed capture holes. The bracket misalignment was mainly due to the MBS not being perfectly round; therefore, the bracket distance to the inner wall would fluctuate as the MBS rotated. These seed capture holes were ineffective because some seeds did not fit well over the cone shaped holes and were being knocked off by the bracket.

Experiment 3. From experiment 2, it was decided that a better bracket design is needed in order to compensate for the imperfect roundness of the MBS and different holes are needed to optimize the seed capture hole success ratio.

A series of tests on the different sizes and shapes for seed capture holes was conducted. The most favorable result was obtained when a hole larger than a size of a seed was drilled all the way through the MBS and a thin piece of plastic tubing placed on the holes outer edge to prevent the seed from going through.

This design for a seed capture hole is easy to make, is very effective in retaining seeds, and prevents the main bracket from knocking off the seeds by pocketing the seed.

The bracket was changed to a spring-loaded double bracket in order to allow the bracket to adjust itself to the MBS inner wall (Figure 8). Another bracket (spring bracket) is mounted by springs on the main bracket and contacts the MBS wall. The springs allow the spring bracket to maintain contact with the MBS wall regardless of wall irregularities. The spring bracket has seed exit port holes drilled in the same place as the main bracket for seed travel. Screws were placed in the middle of the spring in order to hold both brackets and springs in place. A piece of tubing was placed in between both brackets to prevent seed loss during transport.

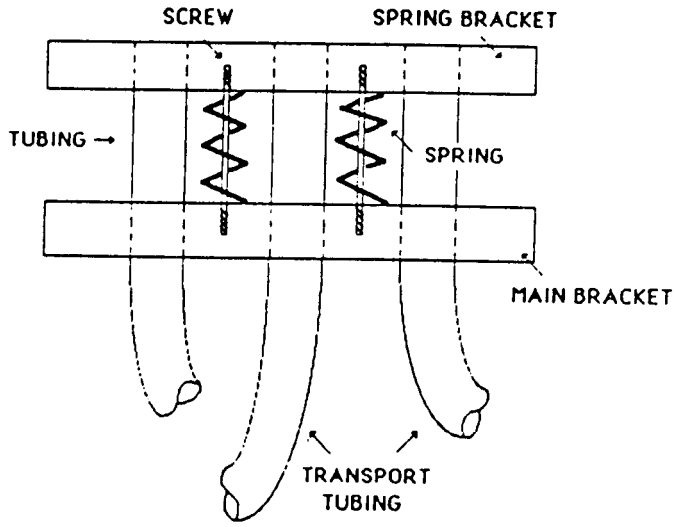

Figure 8. MBS-2 Spring Bracket

This combination of improvements affected the MBS's efficiency dramatically. The results of this experiment were encouraging: 90% seeds were being successfully transported through the tubes. The experiment consisted of placing fifty

seeds in the MBS and rotating it until the seeds were held in place by the seed capture holes. A row of seeds was then aligned with the spring bracket and a burst of air was applied from outside the MBS into the seed capture holes forcing the seeds into the transport tubes and out of the MBS.

Experiment 4. Tests were conducted to find the best way to distribute the air flow within the MBS to agitate the seeds toward the seed capture holes. The best results were obtained when two air lines entered the MBS to cause a circular flow along the inner wall. This flow is similar to the one used for MBS-1.

The new air flow caused the seeds to be captured by the holes quickly and efficiently. This allows the MBS to be rotated faster while maintaining a high percentage of successfully transported seeds. Even though the seeds were captured successfully, some dead zones did appear in the MBS. (A dead zone is an area where the air flow strength is not sufficient to successfully agitate the seeds, therefore seeds in these areas would not move.)

Results to Date

Good results were obtained from the final tube transport MBS seeder. The system separates and transports seeds quickly and accurately. This method of separating and transporting seeds merits further research and development.

Recommendations for Future Development

A recommended improvement is to get a stronger circular air flow within the MBS to decrease the probabilities of dead zones. Also, a more proficient rotating system is desirable.

MINNOW BUCKET THREE (MBS-3)

Concepts and Designs

The design of MBS-3 had originally intended using air as the pressure generator. Further examinations of the problems and experiments conducted with the design proved that water was a better choice for seed separation. By using water, the speed at which the seeds moved, both within the MBS and the transport tubes, was greatly reduced. This is important both in the optical detection of a seed and in the prevention of damage to the seed during transport. A wet MBS also allows the seeds to germinate before planting thus almost insuring plant growth.

The actual design of this seeder involves a large seed and water input tube, a cylinder, transport tubes, and end effectors. Seeds are transported in the water medium from a central storage container to the funnel adaptor at the bottom of the MBS. The funnel adaptor is used to ensure adequate seed movement within the cylinder. The MBS is also used in an upright position to allow the funnel to be effective (Figure 9). In space the water flow within the cylinder will not depend on the orientation of the MBS. The cylinder is transparent, providing better observation of seed movement. Several holes were drilled in the wall of the cylinder and transport tubes were inserted into them. These tubes have an inner diameter that only allows one wheat seed to pass through lengthwise at any given time. After a seed enters the transport tube it proceeds through to the end effector which controls final seed placement and planting. This end effector is attached to a robotic arm which positions it for seed planting.

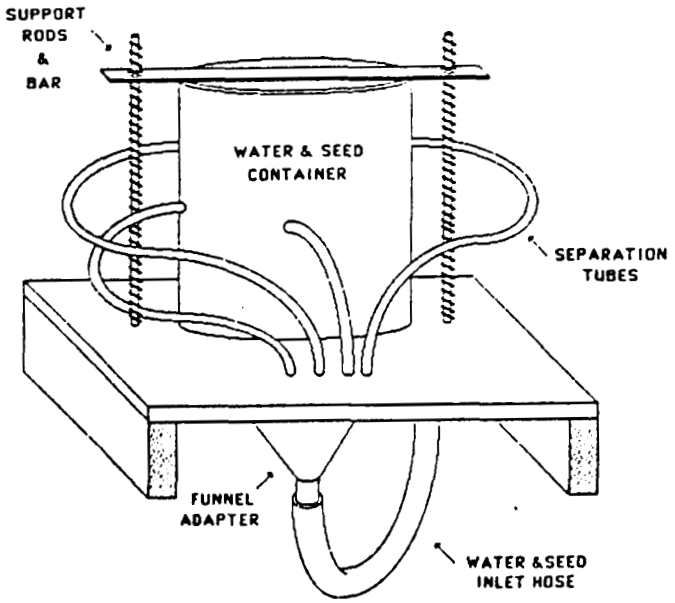

Figure 9. Minnow Bucket Three (MBS-3)

End Effector. The optical sensor used operates using infrared light and is made up of an emitter and a detector. The emitter provides infrared light while the infrared photodetector acts as a switch in the circuitry. When light hits the detector it allows current to flow through the circuit in which it is an element. The detection of a seed is used to move the end effector, via robotic arm, to the correct planting position. This optical sensor is part of the end effector, which is also comprised of the water/seed separator. The two parts of the optical sensor are attached to opposite sides of the transparent transport tube. When a seed passes through the tube it momentarily blocks the light from hitting the photodetector. This momentary current drop is detected by other elements in the circuit and turns the robot arm on and off. The robot arm is preprogrammed so that it moves to a certain position, stops, and waits for another seed to trigger the system again.

Water/Seed Separator. Three designs were considered for accomplishing the separation of the seed to be planted from the water it was transported in. The first design made use of pressure differences created by the seeds clogging holes in the separator. This separator consisted of a small solid cylinder within a thick-walled cylinder. The center cylinder was free to rotate inside the outer cylinder. Holes were tapped for seed trapping and water and air passage in both cylinders (Figure 10). A spring and jet system was used to turn and separate the seeds while air pressure was used to shoot the seed into planting position. The second design also involved the use of the dual cylinder system described in the first design. The holes were tapped in the same way but the rotation was controlled by the robotic arm.

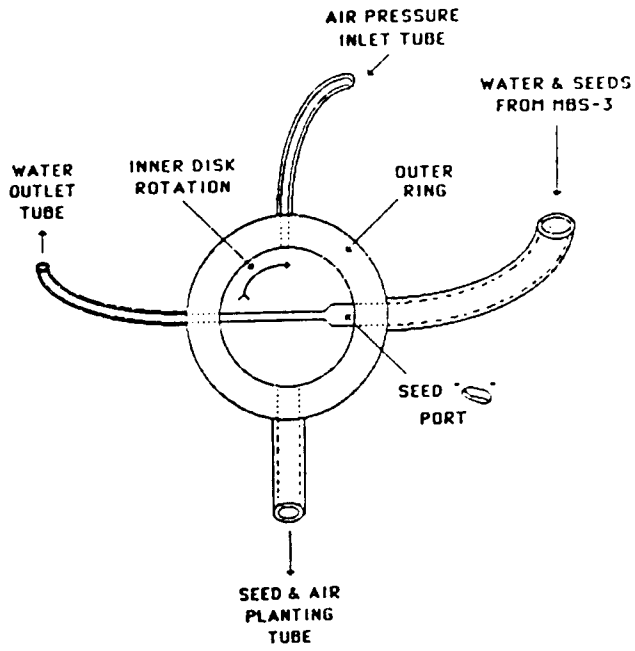

Figure 10. Water/Seed Separator

The third design continuously operates and thus requires no optical sensor as in the second design. It operates using two separate disks connected by a rod. The smaller disk's rotation is controlled by a motor and in turn creates a back-and-forth movement in the larger disk. The larger disk has holes tapped for seed trapping and water and air passage, but the angle at which these holes are drilled is dependent on the radii of the two disks.

Results to Date

Experiment 1. The purpose of this experiment was to determine how well seeds could be separated using the MBS-3 design. This first experiment was done using air as the medium for seed transport. Approximately fifty seeds were placed into the MBS-3 and one transport tube was used to allow seeds to escape from the cylinder. A number of holes smaller than the seeds were also drilled through the cylinder wall to allow air flow. The MBS was placed in an upright position and air was blown through the funnel attachment. Subsequent experiments were done using several escape tubes.

The air blew the seeds around the inside of the cylinder very violently. Seeds stuck to the smaller holes as in previous experiments and several seeds passed through the escape tubes. Unfortunately, the seeds passed through the tubes very quickly and one right after another at certain times. The conclusion from this experiment was that another transport medium was needed to slow seed transport within the cylinder and through the tubes.

Experiment 2. The purpose of this experiment was to test water as the new medium for the MBS-3 design. The same procedure was used as in the previous experiment. The modifications included a change in transport medium (air to water) and a five more transport tubes for a total of six.

Seeds were moved around the interior of the cylinder much more gently than in the previous experiment. They also passed through the transport tubes more slowly than when air was used. A problem that developed involved the clogging of the exit holes within the cylinder. When a large number of seeds were placed inside the MBS-3, seeds clogged the inlet to the escape holes. This was usually caused by one seed hitting the exit holes sideways and being held there by the pressure gradient. Clogging of holes was very random, although an increase in the number of seeds within the cylinder caused a slight increase in the number of clogs.

Experiment 3. Two different tests were done to compare time to number of seeds escaped and the amount of clogging using the MBS-3. The set up was the same as in experiment two. The number of seeds in the MBS was determined at the beginning of the experiment. In the first test the time for a specific number of seeds to escape was measured. The time required for ninety percent of the number of seeds initially placed inside the MBS was chosen to measure time of escape. This number was chosen because the remaining small number of seeds usually took a long time to find an exit hole. Fifty and twenty-five seeds were used in the experiments due to the size of the MBS used in the experiments.

In the second set of tests a specific amount of time was chosen and the number of seeds that escaped was counted. For both experiments the number of clogs was counted and corrected. This was done by momentarily stopping water flow through the tube affected. This allowed the seeds to float off into the cylinder.

Both procedures gave identical results. As the number of seeds was increased at the beginning of the experiment, the rate of escape also increased. When fifty seeds were placed in the cylinder, as opposed to twenty-five, the times for ninety percent

escape were approximately ninety seconds and sixty seconds respectively. The number of clogs varied unpredictably, only slightly higher with fifty seeds than twenty-five.

Experiment with Water/Seed Separator. The purpose of this experiment was to test the design of the water/seed (W/S) separator. The water/seed separator was connected to the MBS-3 via water/seed transport tubes. Air pressure tube was also connected to the W/S separator and to a positive air supply. The MBS was set up and operated as in experiment two. The W/S separator was rotated by hand when a seed entered the seed port.

The crude materials used did not allow for a water tight seal. Consequently a large amount of water leaked out from the air/seed planting tube. Except for the leakage the design was effective in moving the seed from the water/seed transport tube and out through the air/seed planting tube.

Recommendations for Future Development

The water MBS constructed and tested in these experiments performed well. Several problems were encountered with both MBS-3 and the end effector. The clogging of seeds around holes was unpredictable. A mechanism for preventing clogging or correcting it needs to be investigated. A funnel design for the exit hole inlet was tried in later experiments, but the extent to which this prevented clogging was not clear. A simple method for declogging was also devised in these later experiments. By stopping flow through the exit tube effected, the seeds would float away from the hole, thus declogging the exit.

The results for the W/S separator were also promising. The main problem was leakage, but this could be amended with the use of higher quality of materials in its construction. The coupling of MBS-3 and the W/S separator was successful in planting seeds into seed cassettes with the use of the robotic arm.

ELECTRICAL SEEDERS

Concepts and Designs

Upon completion of the Fall Semester, several goals were established for the Electrical Seeder Division final project. The shape of the electrodes needed to be configured to move the seeds in the desired direction. The propagating medium for the electric field was chosen to be air to minimize the possibility of seed damage. The seeds should be separated to produce an optimal planting scheme. Also, the final design, fabrication, and testing would be completed by the end of the Spring Semester.

The underlying principle behind the Electrical Division's seeder is the use of electrical induction to separate and transfer seeds to the planting mechanism. An electrostatic generator was used to apply an electric field between two electrodes. The electrostatic device was a van de Graff generator, which provides approximately 300,000 Volts. The electric field induced dipoles on the seeds; the poles were then attracted to the opposite electrode. Therefore, this seeder uses the electric field to prepare the seeds for planting.

Electrode Shapes and Field Configurations. Electric charge applied to a metallic conductor produces an electric field. The electric field creates "lines", which map the orientation of the field. These electric field lines originate and terminate at right angles to an electrode. By varying the shape of the electrode, the resulting field also changes. The parameters controlled were field strength and orientation. Field strength is inversely proportional to area, therefore the field is strongest when originating from a point source. Field orientation was controlled by the shape of the electrode.

Since electric fields are weak and dissipate with distance from the source, electric induction motors are seldom used. For seed separation small forces can be used, especially in a

microgravity environment. The first electrode design consisted of a wire to wire electrode configuration. The electric field is at its strongest, and the resulting seed separation occurs rapidly. The field propagated in all directions around the charged wire, and only a small component terminated on the oppositely charged electrode. Also, the field lines were elliptical and moved the seeds but did not separate them.

Another electrode design consisted of a wire-to-curved plate electrode configuration. This configuration benefited from the strong field of the wire electrode, but the field termination at the curved electrode scattered the seeds along the arc of the curve. The seed separation was inadequate, and a useful collection apparatus would be difficult to construct.

A flat plate-to-flat plate electrode configuration produced better results. Since the field lines aligned themselves linearly from plate-to-plate, the seeds were oriented perpendicularly to the electrodes. This proved to be the optimum condition for seed separation. Due to the large area of the plates, the generated field strength did not move the seeds efficiently.

The best results were achieved by a wire electrode-to-flat plate electrode configuration. This design employed the field strength properties of the wire electrode with the alignment properties of the plate electrode. The field lines were generated by the wire electrode and were terminated over the large area of the plate electrode. The seeds were dispersed along the length of the flat plate, which would allow an easier implementation of a collection device.

After deciding on the configuration of the electrodes, the optimum placement of the electrodes was the remaining problem. Since the field dissipates inversely with distance, our conclusion was that the electrodes should be in close proximity. The optimum distance for seed separation was approximately two inches.

Seed Separation and Implantation. The first design consisted of the wire-to-flat plate electrode configuration. A plastic seed separation unit was placed against the flat plate electrode. This unit consisted of several semicircular tubes placed perpendicularly to the plate electrode (Figure 11). A thin insulating film was placed across the electrode, to prevent seed contact with the electrode.

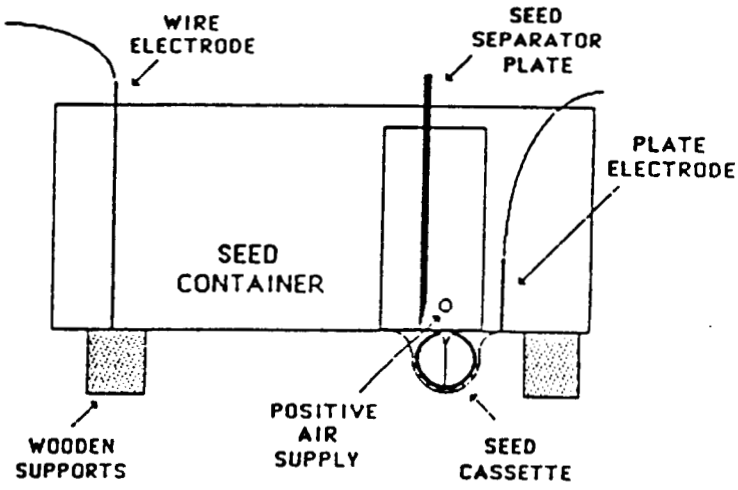

Side View

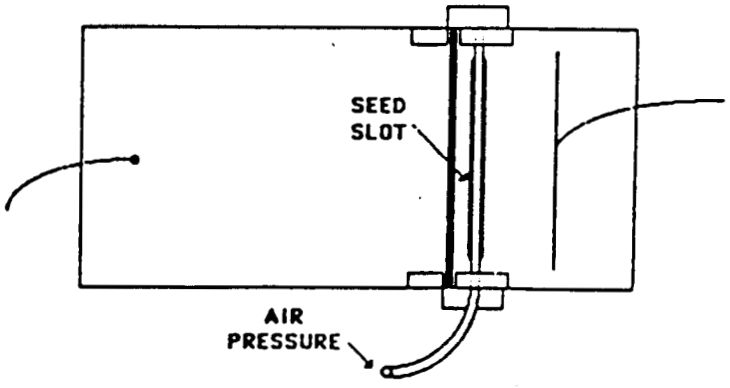

Top View

Figure 11. Electric Seed Separator

This design produced fairly good results. The 3/8 in. semicircular tubing allowed several seeds to cluster in each tube. Also, the electric field was non-uniform, so each tube did not get an equal distribution of seeds. Several seeds entered into the separation unit, and the separation success rate was about 50%.

The next step after seed separation is seed planting. The planting scheme incorporated is the seed cassette planter. The seeds are forced between the two filtering contacts and suspended while receiving nutrients hydroponically.

Design Improvements. The electric field provides an efficient way to separate seeds, although the electric force is insufficient for direct placement into the seed cassette planting unit. Therefore, a supplementary method for seed placement must be used. Seed spacing is also important, to allow ample light and sufficient nutrients for proper seed growth.

The problem of seed spacing was resolved by using an insulating gate between the seeds and the collecting (flat plate) electrode. The closed gate allowed electric charge to build up on both electrodes, and the opened gate allowed the seeds to migrate towards the collecting electrode. Therefore, the movement of the seeds could be controlled and clustering would be reduced.

Seed implantation into the cassette was the remaining concern. The electric field produces weak electric forces; these forces are able to separate the seeds but are incapable of forcing seeds into the cassette. An alternative method must be used to force the seeds into the cassette, once the seeds have been properly separated.

One alternative method consisted of using compressed air to move the seeds into their respective places. The seeds were separated and transferred to the aperture of the seed cassette. Compressed gas was applied through a plastic tube with an opening along the cassette aperture. The amount of gas pressure

controlled the depth of penetration into the cassette, and the seeds could be moved to the optimum depth.

Results to Date

The results of the experiments showed that the electrostatic seed separation system may be useful for microgravity operation. The final design and experimentation produced a seeder with a fifty percent success rate, with one minute elapsed per cassette. In microgravity, several of the inhibiting factors will be diminished or eliminated. The seeder had some promising results, including a good success rate in a reasonable amount of time. Further research and development may produce a viable electrostatic seed separation system.

Inhibiting Factors. Humidity played a major role in seed clumping. The field strength is inversely proportional to conductivity. Air is an excellent medium because of its low conductivity. Water has a high conductivity, and a large presence of moisture dissipates the electric field between the electrodes. Charge migrates through the moist air and field strength dissipates accordingly.

Charge dissipation also occurred in other ways. The type of container used was composed of plexiglass. Plexiglass is a good insulator, but it is not perfect, and therefore charge remains on the container and the electrodes continue to lose charge. The brackets, nuts, and bolts also held an amount of charge, depending on their conductivity. This process produces a multiplying effect; charge on the container attracts other charges, thus reducing the charge on the electrodes and the corresponding field strength. Charge also dissipated through the electric cables, which were made for smaller potentials and could not fully transmit the high voltage produced by the Van de Graff generator.

Another inhibiting factor was the presence of friction. Static and sliding friction between the seeds and the container prevent the electric forces from moving the seeds. Frictional forces are normal forces, which will be reduced in microgravity.

Recommendations for Future Development

Final Design and Fabrication. After testing each system component separately, the final phase included the integration of field orientation, seed separation, and seed implantation. These elements were integrated into a final design and fabricated for testing.

The final electrode configuration that was used was the wire electrode-to-flat plate electrode configuration. This electrode combination utilized the field strength of the wire electrode along with the collecting properties of the flat plate electrode. This configuration produced the proper field strength and orientation for successful seed separation and implantation. The plastic seed separator was discarded, because the force of the field was insufficient to overcome the slope of the separator. The alternative to the plastic separator was an insulating gate. The insulating gate is a dielectric that impedes the propagation of the field. This gate was placed between the wire electrode and the container opening. The seeds were propelled by compressed air via a plastic tube into the cassette aperture where they were imbedded to the proper depth.

Once the electrostatic generator is turned on, charge is built up on the electrodes. When the restraining gate is raised, seeds are attracted to the flat plate electrode. Before seed collection at the flat plate, the seeds are held by the container opening and are imbedded in the cassette to the proper depth by the compressed gas. The restraining gate is then lowered so that no more seeds are allowed to enter the cassette. This procedure is repeated for the filling of other cassettes. In microgravity, the compressed gas flow would force the seeds into cassette, when the seeds crossed the flow path.

APPENDIX A

SEED CAPTURE TEST RESULTS

In order to determine the efficiency of the minnow bucket, air supply, and seed capture holes, tests were conducted to measure the time required for dry wheat seeds to be captured by the holes. Twenty-five milliliters of wheat seeds were placed inside the minnow bucket. The air supply was then turned on and the elapsed time recorded when 90% (22/24), 95% (23/24), and 100% (24/24) of the holes acquired seeds.

Test Run	90%	95%	100%
1.	1:05 min	1:11 min	1:32 min
2.	:35	1:12	1:51
3.	1:10	1:35	1:50
4.	:28	1:12	1:44
5.	:52	1:13	1:47
6.	1:15	1:34	1:40
7.	:26	:58	1:03
8.	:32	:49	:57
9.	:23	:24	:31
10.	:47	1:12	1:19

Average time for 90% of the holes covered: 45.3 sec.
Average time for 95% of the holes covered: 1:08 min.
Average time for 100% of the holes covered: 1:25 min.

During these tests, the minnow bucket split and the funnel uncoupled. Safety modifications were made to prevent future accidents. Aluminum hose clamps were fabricated and installed on the minnow bucket. A French press consisting of a flat aluminum bar, two threaded rods one foot in length, and a wooden section cut to fit over the funnel and rest on the minnow bucket was fabricated. Holes were drilled in the aluminum bar and the wood plate. The press was constructed by placing the aluminum bar on the Lucite cover, the connecting the bar and wood plate by the threaded rods, and tightening the press with four nuts.

After these modifications were made, the seed capture tests were redone.

Test Run	90%	95%	100%
1.	45 sec	48 sec	59 sec
2.	30	31	33
3.	16	22	45
4.	17	23	45
5.	19	23	29
6.	24	31	32
7.	28	38	55
8.	18	22	45
9.	21	24	30
10.	31	38	70

Average time for 90% of the holes covered: 24.9 sec
Average time for 95% of the holes covered: 30.0 sec
Average time for 100% of the holes covered: 44.3 sec

These results indicate that the French press and clamps have improved the seals between the sides of the minnow bucket, Lucite face plate, and funnel. Since the seal has improved the pressure gradient and flow within the minnow bucket were improved. Thus the capture times were lower.

APPENDIX B

CASSETTE/BLOWER TEST

It was also necessary to test the effectiveness of the seed blower delivering seeds to the cassette. The test was conducted by first turning on the air supply to force seeds to the holes. Next, an empty seeds cassette was inserted under the top row of seed capture holes. The blower was then used to blast the seeds into the cassette. The tests were conducted with dry cassettes and cassettes that were slightly wet. Results are reported as number of seeds successfully delivered and held by the cassette over total seeds in one row of capture holes.

Test Run	Dry Filter Paper	Wet Filter Paper
1.	1/6	5/6
2.	0/6	5/6
3.	1/6	3/6
4.	2/6	4/6
5.	0/6	5/6
6.	1/6	6/6
7.	1/6	5/6
8.	0/6	6/6
9.	1/6	5/6
10.	1/6	4/6

These results show that the cassette will accept the seeds more readily if the filter paper is slightly wet. The dry paper is too stiff to accept the seeds. This problem could be corrected by redesigning the cassette so the opposite sides of the V-shaped portion of the dry filter paper does not come into as much direct contact.

Planting the dry seeds into an already wet cassette could be advantageous. The seeds would then be in an environment that would encourage their germination if the planting scenario required pre-germinated seeds.

It was observed also that seeds would occasionally exit the minnow bucket through the open end of the cassette when the seed blower was used. Temporarily plugging the cassette end during the tests eliminated this problem.

C-3

N89-24021

NON-DESTRUCTIVE PLANT HEALTH SENSING USING ABSORPTION SPECTROSCOPY

Prepared by

Jim Bledsoe
Ara Manukian
Michael Pearce
Lee Weiss

PRECEDING PAGE BLANK NOT FILMED

SUMMARY

The sensor group of the 1988 EGM 4001 class, working on NASA's Controlled Ecological Life Support Systems (CELSS) project, investigated many different plant health indicators and the technologies used to test them. The project selected by the group was to measure chlorophyll levels using absorption spectroscopy.

The spectrometer measures the amount of chlorophyll in a leaf by measuring the intensity of light of a specific wavelength that is passed through a leaf. The three wavelengths of light being used corresponded to the near-IR absorption peaks of chlorophyll a, chlorophyll b, and chlorophyll-free structures.

Interference filters, mounted on a rotating disk and placed in a beam of collimated light, are used to select a specific wavelength of light. A computer positions the disk to select the proper filter. A lens then focuses the filtered light onto the end of a fiber optic light guide, which carries the light to the detector clamp. A leaf is placed between the blades of the clamp and a photodetector is located directly opposite the end of the light guide. The computer measures the voltage produced by the detector and stores the data on a disk file for analysis.

Experimentation showed that the sensor is indeed measuring levels of chlorophyll a and b and their changes before the human eye can see any changes. The detector clamp causes little damage to the leaf and will give fairly accurate readings on similar locations on a leaf, freeing the clamp from having to remain on the same spot of a leaf for all measurements. External light affects the readings only slightly so that measurements may be taken in light or dark environments.

Future designs and experimentation will concentrate on reducing the size of the sensor and adapting it to a wider range of plants. Additional research may allow the sensor to be used in conjunction with an expert system to diagnose particular stresses and propose a treatment.

TABLE OF CONTENTS

INTRODUCTION.....50
Problem Description.....50
Project Description.....51
Design Criteria.....52
Background Information.....53

CONCEPTS AND DESIGNS.....55
Biological Aspects of Plants.....55
Photosynthesis and Chlorophyll.....55
Chlorosis and Detectable Changes in Plant Health..56
Plant Stress Sensor.....56
Spectrometer.....57
Detector Clamp.....59
Interface Box and power Supply.....60
Computer Controller.....60
Detailed Descriptions of Spectrometer Components.....60
Electrical Components.....61
Power Supply.....61
Light Source.....61
Stepper Motor.....62
Detector.....62
Interface Box.....63
Data Acquisition Board.....63
Computer Aspects.....63
Control.....64
Data Acquisition.....65

RESULTS TO DATE.....66
Experiments Conducted.....66
Cut Leaf Experiment.....67
Night to Day Transition for Live Leaf.....67

Clamp Placement and Contact Damage.....68
Clamp Contact Effects.....70
Clamp Location.....70
Physical and Chemical Stresses.....72
Control Plants.....72
Physical Stresses.....73
Chemical Stresses.....75

CONCLUSIONS.....76

RECOMMENDATIONS FOR FUTURE DEVELOPMENT.....78
Further Experimentation.....78
Wavelength Selection.....78
Calibration of Spectrometer.....78
Age Dependence.....78
Realistic Plant Stresses.....79
Possible Future Implementations to PSS.....79
Robotic Clamp Manipulation.....79
Use of Lasers as a Light Source.....79
Plant History Analysis.....80

REFERENCES.....81

Appendix A.....82

Appendix B.....85

Appendix C.....87

Appendix D.....89

Appendix E.....91

Appendix F.....96

INTRODUCTION

Problem Description

In the near future, when long term space travel becomes a reality, the need for food sources will become one of the many crucial factors controlling the duration of a space flight. The ability to grow crops in space can provide a virtually unlimited source of food and oxygen, and when astronauts count on such a closed ecological system, their survival is dependent upon the health of those crops. There is a need for some type of system that can monitor the food crops, determine if the plants are healthy or not, be able to diagnose the problem if the plants are not healthy, and finally suggest an appropriate course of action to insure the survival of the crop.

Such a system would be subdivided into two parts. The first part would encompass a way of monitoring the plants and detecting any possible problems. The second part of the system must then be able to interpret the data from the sensor and determine an appropriate course of action. An expert computer system combined with remote sensors could accomplish this task. The remote sensors would provide a way of continuously monitoring the status of the plants, and the expert system would act as a programable plant pathologist. The expert system would be able to interpret this sensory data and determine if a problem exists, and then reference its extensive knowledge and data bases to suggest a diagnosis and cure.

The success of this system is contingent upon the reliability of the remote sensor. Having a dependable automated plant health sensing system would free the astronauts from the time consuming task of visually inspecting thousands of plants on a daily basis and would not require at least one of the crew members to be an expert on plant diseases. The sensitivity of the remote sensor for detecting plant stress is important because there are many plant diseases which can harm a plant before there

are any visual signs of damage. For this reason, the development of a reliable sensing technology would be of primary importance, since one would not be able to insure the survivability of the food crops based only on infrequent visual observations.

Advances in the area of remote sensing of plant health have been slow. There are a few techniques presently being used here on earth, however, there is still a reliance upon the visual observations of agronomists and pathologists to discover and diagnose plant diseases. On earth, the losses of crops due to missed or late observations would not have the same impact as on a space mission with a limited number crops and crew members whose lives depend on those crops.

Project Description

The Sensor Project Group has selected to design a Plant Stress Sensor (PSS) which could be used to monitor the health of crops grown in space. This sensor will incorporate the use of a non-destructive form of absorption spectroscopy to measure the concentration of in vivo chlorophyll in attached plant leaves. The operation of the PSS will be completely automated through the use of a computer controller, which will also process all measurements made by the spectrometer. The development of this type of sensor is required before the entire process of automated plant health monitoring and incorporating expert systems for disease diagnosis can be implemented. The development of such a sensor would be useful for both the NASA CELSS Project as well as for the rest of the agricultural community.

Design Criteria

In designing a remote sensor to monitor the health status of plants to be grown in space, several factors must be taken into consideration. One must not only consider the wide variety of plant types and plant sicknesses, but also the special requirements for such a system to work unattended in micro gravity. Several goals were set by which to judge the merits of the various plant indicators and the technologies to sense them.

1. The indicator being sensed must give the earliest possible warning of plant stress. It must able to indicate a plant sickness (disease or deficiency) before irreversible damage has occurred.

2. The indicator must respond to a wide range of plant stresses having various types of affects upon plants. The possible sicknesses include all types of pathogen invasion, nutrient deficiencies, environmental and water stresses and physical trauma.

3. The indicator must be able to be implemented for a wide diversity of crops (or at least to the types which are being considered for space travel).

4. The sensor must not be harmful to the plant in any way that could jeopardize its growth or survival.

5. It should be an accurate and dependable indicator of plant stress. There should be no false alarms or late warnings.

6. It should give a real time indication of the health status of a plant, instead of an analysis dependent on measurements over time. In this way, the condition of many plants could be monitored more rapidly.

7. The sensor should not contaminate the growth chamber. The generation of toxic waste products or particulates would have harmful effects.

8. The system must fit within the growth chamber and be small enough to be manipulated in the growth area.

9. It must operate in microgravity and must function properly independent of orientation.

Background Information

During the Fall 1987 semester, the Sensor Project Group conducted extensive research into the area of remote sensing and plant health. The first phase of this research was to determine a good general indicator of plant health. Information was gathered from several experts in the field of plant pathology, botany, agriculture, agronomy, and food crops at the University of Florida, as well as from published research in books and professional journals. From our research, the following indicators of plant health showed to be the most promising for non-destructive sensing:

1. Changes in leaf color
2. Leaf surface temperature
3. Growth rate of the plant
4. Changes in canopy area
5. Growth rate of the flag leaf
6. Plant rigidity
7. Nutrient intake
8. Carbon dioxide intake
9. Chlorophyll levels or activity

The second phase of research was to determine the best sensing technology that could be applied towards monitoring plant health. The technologies considered where those that could be used to monitor any of the plant health indicators which are listed below:

1. Gas level/exchange monitoring
2. Infrared (IR) temperature monitoring
3. IR video imaging
4. Spectral reflectance using color IR film
5. Odor sensing
6. Ion detection/monitoring
7. Nuclear magnetic resonance
8. Electrical properties
9. Resonance frequency
10. Stimulus response monitoring
11. B & W video image processing
12. Chlorophyll level/activity determination

After much consideration and discussions with several experts, it was determined that leaf chlorophyll levels are one of the best general plant health indicators, since chlorophyll is present in all plants and that any stresses induced on the plant should affect the levels of the chlorophyll before irreversible damage occurs. Plant pathologists use the presence and pattern of chlorosis to determine whether a plant is stressed, but the human eye is sensitive to a small range of wavelengths, so it is difficult to see changes in light absortion at the particular wavelengths that would correspond to a drop in plant chlorophyll level.

After plant chlorophyll levels were chosen as the health indicator that was to be sensed, a sensing technology was now needed to measure this indicator. Extensive research showed that absorption spectroscopy would be the best method for measuring the effects of plant sicknesses on chlorophyll. A spectrometer measures the concentration of a particular element or compound by the amount of light that an unknown sample absorbs at a fixed wavelength. The Sensor Project group chose to design and construct an absorption spectrometer for measuring the concentration of chlorophyll. It was decided that it was feasible to measure the concentration of chlorophyll while it is still in the plant leaf, instead of removing a sample for destructive testing, as is traditionally done. In this way the measurement process could be greatly simplified, and the possibility of harming the plant by removing a sample would be eliminated.

Biological Aspects of Plants

Photosynthesis and Chlorophyll. During photosynthesis, water and carbon dioxide are converted into glucose and oxygen. There are two reactions that govern this transition: the light and dark reactions. In the light reaction, solar energy is collected and directed at water (a photon splits a water molecule producing ATP, NADPH, and oxygen). Then the dark reaction converts the carbon dioxide, ATP, and NADPH into glucose.

The two types of chlorophyll in the higher plants are chlorophyll a and b. The maximum absorption for these molecules ranges from 440-470 nm and 640-680 nm, respectively (Figure 1). At these wavelengths, photons are channelled into the two photosystems where the photon's energy is converted into carbohydrates. Of importance is the relative concentration of chlorophyll within the cell. The absorption value would correlate to the chlorophyll concentration, which is directly dependent on the health state of the plant. Any drastic changes in chlorophyll concentration could warn of possible harm to the plant.

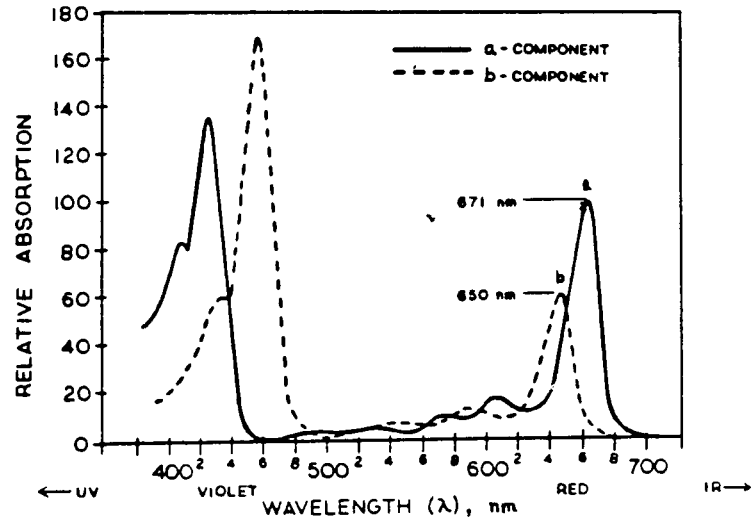

Figure 1. Absorption Spectra of Chlorophyll a & b

Chlorosis and Detectable Changes in Plant Health. Chlorosis is the loss of the green color in the plant leaf due to the decomposition of the chlorophyll in the plant cells as a result of stress. This is the cause of the yellow or dark green color in sick plants, and on initial observation of a stressed plant, chlorosis is usually the first visible warning of declining plant health [1]. Chlorosis is an early indication of a wide variety of plant stresses, the most important being improper light level, nutritional deficiencies, toxins, and pathogen invasion [1].

When present, chlorosis could appear in various locations and patterns throughout a diseased leaf. The result of improper lighting will cause an overall change in leaf color and a pattern of chlorosis related to the vein distribution with deficiencies in chlorophyll depending upon the rate of xylemic delivery [1]. A pathogen would cause localized chlorosis and these diseased spots would be detected at locations where pathogen concentrations were greatest.

Plant Stress Sensor (PSS)

The plant stress sensor uses a specially designed absorption spectrometer which non-destructively measures the amount of light being absorbed by the chlorophyll molecules at their absorption peaks. The measurement of the amount of light being absorbed by the chlorophyll relates directly to the concentration of chlorophyll in the leaf. The more chlorophyll present in a plant leaf, the more light will be absorbed by the plant at the peak wavelengths. As a plant becomes stressed, the chlorophyll molecules begin to decompose and the amount of chlorophyll begins to decrease. With this decrease in chlorophyll, the amount of light being absorbed also decreases, and this decrease can be calculated by measuring the corresponding increase in transmitted light on the other side of the leaf.

The Plant Stress Sensor (PSS) designed to accomplish this task consists of a system containing four main components (listed below), each with many subcomponents.

1. Spectrometer
2. Detector clamp
3. Interface box and power supply
4. Computer controller

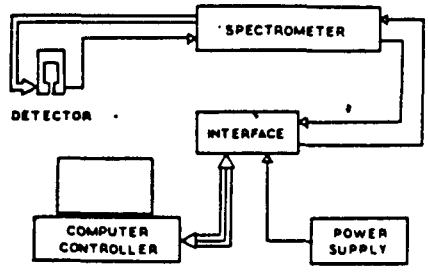

Figure 2. PSS-System Block Diagram

Spectrometer. The spectrometer module of the plant stress sensor is simple in design. It consists of a spectrometer that is configured to measure the light absorption of molecules (in this case, chlorophyll) at three predetermined wavelengths. The spectrometer delivers light of the required wavelengths to the surface of the leaf so that the intensity of the transmitted light can be measured by the photodiode on the other side (Figure 3).

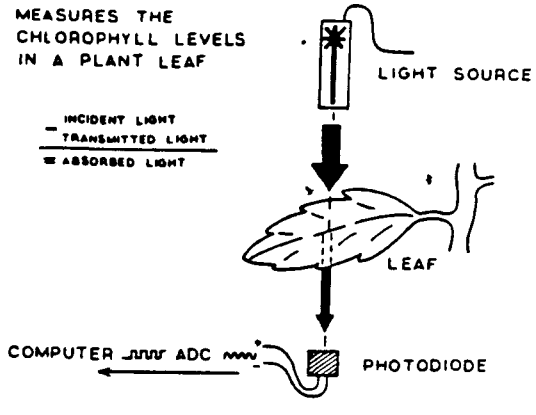

Figure 3. Absorption Spectroscopy

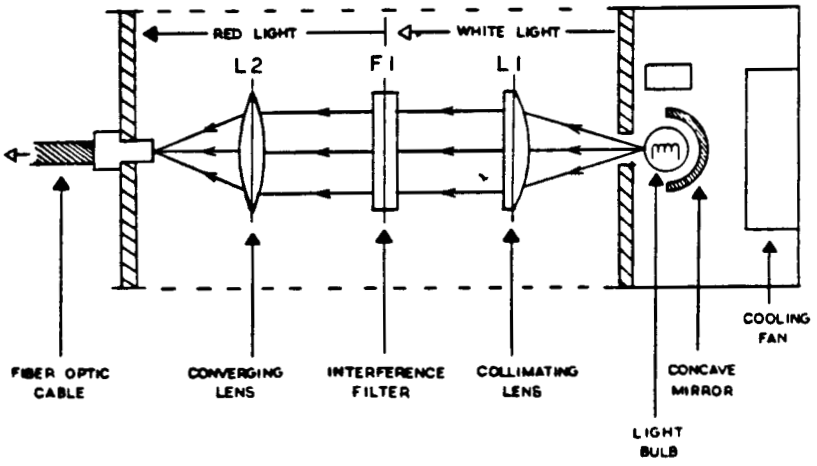

Figure 4. Spectrometer

The optical configuration of the PSS consists of five basic units: (Figure 4)

1. Small quartz-halogen bulb with rear reflector
2. Single collimating lens
3. Set of three interference filters
4. Single lens for focusing the filtered light
5. Fiber optic light guide

A 55 watt quartz-halogen bulb with rear reflector supplies white light to the interference filters. The design of the light separation section of the spectrometer is simple in comparison to existing analytic spectrometers since the absorbance of the leaf is being measured at only three wavelengths of light (650, 671, and 750 nm, each with a 10 nm half-height bandwidth). Because the measurements are being made at only these three constant wavelengths, absorption filters can be used to obtain the required wavelengths instead of the traditional prisms or interference gratings. The interference filters are mounted on a rotating disk which is driven by a stepper motor to allow the computer to position each of the filters during a measurement. The optical elements are supported on a rigid aluminum base to prevent vibrations of the optical components which would cause a variation in the measurements. A fiber optic light guide transfers the filtered light to the leaf clamp, thus allowing the actual measurement device to be relatively small. The entire

mounting system is adjustable to allow for testing of various optical configurations. A cooling fan was installed to prevent the overheating of the lamp, and all connections are removable for transportation.

Detector Clamp. The purpose of the detector clamp is to allow the filtered light to be brought to the surface of the leaf so that the light absorbance can be measured on the other side. The clamp was designed to do the following:

1. Keep the light guide and photodetector aligned, thus insuring consistent measurements.
2. Prevent the intrusion of external light.
3. Prevent damage to the leaf being measured.
4. Allow the investigator to repeatedly place the clamp over the same position on a leaf.

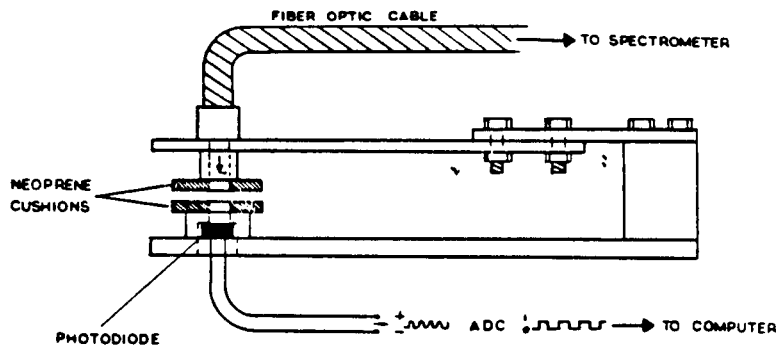

Figure 5. Detector Clamp

The detector clamp consists of a plexiglas top to hold the end of the fiber optic light guide, an aluminum bottom to house the photodetector, and a thin aluminum sheet to act as a spring between the top and bottom halves (Figure 5). The two halves of the clamp that come into contact with the leaf are covered with neoprene to prevent external light from reaching the photodetector while preventing damage to the leaf. Operation of the leaf clamp requires only one hand, thus simplifying the measurement process. A measurement is made by pulling the two clamp halves apart and inserting the portion of the leaf to be

measured over the photodiode. The clamp is then allowed to close (the spring exerts positive pressure on the two halves) and the measurement is ready to be taken.

Interface Box and Power Supply. The interface box is used as junction for all of the electrically related system components as well as an interface between the computer and the rest of the system. All data and control signals are passed through this box before being connected to the computer. Power for the interface box and electrical components within the spectrometer are also routed through the interface box.

Computer Controller. The computer controller, which is considered the 'brain' of the entire system, is used to control all of the electrical components and is also used for processing of the data. All the operations required to take a measurement of light absorption are completely automated. The computer is programmed when to take samples and sends signals to the rest of the system which causes the spectrometer to turn on, select the proper filters for measurement, input the results and process the data received from the detector and give a determination on the health of the plant.

Detailed Descriptions

The next section describes in more detail the specific operations of all the PSS subcomponents. Refer to the appendices for specific technical information or detailed schematics and drawings.

Electrical Components. The spectrometer requires six electrical components for its operation:

1. Power Supply
2. Light source
3. Stepper Motor
4. Photodetector
5. Computer Interface
6. Data Acquisition Board

Note: See the appendices for technical information, specifications, and schematic drawings.

Power Supply: The power supply used for the spectrometer is a separate unit which supplies different electrical voltages (both AC and DC) to the various components of the system. The input to the power supply is the standard 115-120 volt AC from any common house electrical outlet. This supply has 3 outputs, a 20 volt AC signal for the light, a 5 volt DC - 2.0 amp source for the stepper motor, and a 16 volt DC - 0.5 amp source for the computer interface and related electronic circuits.

Light Source: The light source consists of 4 subcomponents. A rectifying circuit, which is used to convert the 100 volt AC signal from the power supply into a 12 volt DC - 5 amp source for the light bulb. Next is the light which is a small 55 watt quartz halogen bulb that receives its power from the rectifier circuit. This bulb generates white light which can be separated into the desired color using filters. There is also a heat sensor mounted next to the light bulb which is connected to the rectifier circuit. This sensor is used to automatically disable the power to the light bulb in case it overheats. When it cools back down, it restores power to the light. The turning on or off of the light is controlled by computer software through the interface. Finally, a fan is used to cool the light bulb by drawing air from the optics portion of the spectrometer to the outside, thus removing heat from the chassis where the heat sensitive optics are located. The fan turns on when the light is

turned on and remains on for a short delay after the light is turned off to circulate air around the bulb as it cools. This time delay can be adjusted by the computer software.

Stepper Motor: The stepper motor is used to select filters for measuring the absorption of different wavelengths of light. The motor requires a 4.0 volt DC - 1.2 amp input for each step or turning of the armature. Each step is equivalent to 1.8 degrees of rotation of the motor shaft. The control of the voltage being applied to the motor is achieved through computer software and the interface.

Detector: The detector used to measure the amount of light of being absorbed by a plant leaf is a silicon PNN^{+} photodiode. This type of detector was chosen over other types of photodetectors because of its good spectral response over the wavelengths of visible light that chlorophyll a and b absorb, 650 and 671 nm respectively (Figure 6). As light strikes the surface of this photodiode, it develops a small voltage (300 - 600 mV) across its output leads. As the intensity of light striking its surface increases, so does the voltage being developed across the leads of the photodiode. This small voltage signal is sent back to the interface box where it is then channelled into the data acquisition board in the computer where this signal is amplified and processed.

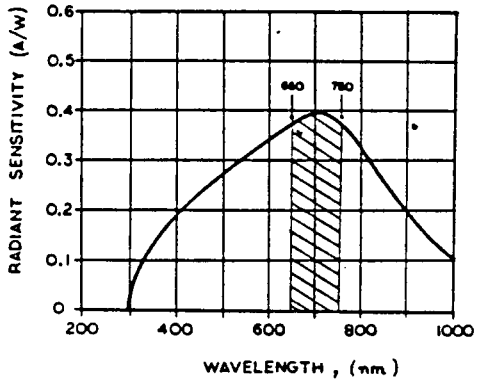

Figure 6. Spectral Response of the Photodiode

Interface Box: The Computer Interface serves as a distribution point for all of the electrical signals to and from the spectrometer, power supply, and the computer. It contains several relays which act as electrical switches used to turn the power on and off for the light, fan, and stepper motor. The actuation of the relays is achieved by sending signals from the computer which can control the time interval which a specific relay is turned on or off, thereby controlling the corresponding component which is hooked up to that relay. The control signals that are received from the computer are very weak and do not have sufficient power to turn on the relays, which require more DC current than the computer can supply. These signals must be amplified before they reach the relays, therefore the interface is equipped with a transistor circuit for each relay which is used to amplify the weaker voltage to the level required to actuate a relay. The interface box also contains LEDs (light emitting diodes) which show the status of a specific relay (on or off), as well as fuses for all the power for the system.

Data Acquisition Board: Finally, the Data Acquisition Board (DAB) which is located inside the computer serves as the Input/Output (I/O) device for all the control and data signals which are transmitted between the spectrometer and the computer through the interface box. This DAB is a commercially available expansion board (the DASCON-1 (R) produced by the MetraByte Corporation) for the IBM PC/XT or AT (R) computer. See the computer control section for more explanation of the DAB.

Computer Aspects. The operation of the spectroscope is controlled by an IBM PC/XT (R) computer running software written using GWBASIC (R). The computer is the heart of the system and allows the user to measure the health of a plant without understanding what is actually being done.

Control: When the computer software is first executed, the program initializes the DAB and loads the machine language interface required to communicate with the A/D hardware. The stepper motor is then manually incremented until it is placed in the "home" position. The "home" position is a fixed position of the filter wheel in which the white light filter is in the light path in the spectrometer. All other movements of the filter wheel are relative to this "home" position. The next step is to determine when to take a sample of light readings from the spectrometer. If a controlled experiment is being run, then the user selects a time interval for the computer to pause before automatically taking a sample and cataloging it to a disk file. If immediate health determination is desired, then a time interval of zero minutes is selected and the user presses a key on the keyboard when a health test is to be performed. For controlled experiments, the data written to the disk file is then loaded into Lotus 1-2-3 (R) for analysis.

All operations of the spectrometer are controlled by the computer. The Mechanical components directly controlled by the computer are: light source, cooling fan, and stepper motor. The light source may be manually operated by keyboard commands, or automatically operated when controlled light measurements are being taken. The fan is automatically turned on when the light is turned on, whether manually or automatically. When the light is turned off, the fan will turn off after a predetermined amount of time has elapsed. If controlled measurements are being taken, the computer also sends pulses to the stepper motor to select the proper interference filter. A total of five measurements are taken. They are: no light, 750 nm light, 650 nm light, 671 nm light, and white light. The white and no light readings are taken to store as much information as possible to help future normalizations of the data by different methods and attempt to eliminate the effects of external light interfering with the selected wavelength.

Data Acquisition: All data and control signals are connected to the computer via an analog to digital interface board (See the appendices for specifications of the DAB). The DASCON-1 board accommodates for both analog and digital input and output. Four digital outputs, two analog outputs, and one analog input are used from the DAB.

The four digital outputs control the stepper motor. The output lines drive relays which apply a large current to the motor windings because the digital lines can only support a small current load. The outputs supply either a positive voltage or a ground to each terminal of the two windings, allowing for a polarity change in the windings. Appendix A shows the sequence in which the digital outputs must be selected in order to move the motor in one direction. The sequence has both windings powered at all times to provide maximum torque. This will help reduce the chance of the disk losing alignment because of bumping or vibration during sampling.

The two analog outputs are used to control the light source and cooling fan. The analog outputs are used in the either full on or full off state, like a digital output, but were chosen over digital outputs because the full scale voltage is adjustable from 2.5 volt DC to 10.0 volt DC. These two outputs activate relays which control power to the light source and cooling fan.

The analog input is used for the photodetector. The photodiode produces a voltage between 300 mV and 600 mV which is reduced 66 percent by a 4.7/2 voltage divider. This gives a full scale input of 198 mV which is amplified by a x10 instrumentation amplifier to give a full scale input of 1.98 volt DC. This is an ideal value since the maximum input level is 2.0475 volt DC. Data is stored on the disk as bit values instead of voltage levels to help eliminate unit discrepancies.

RESULTS TO DATE

Experiments Conducted

All of the following experiments were conducted on Georgia Southern (Creole) collard plants grown in conventional planting trays. The plants reached full growth in 75 days, and the all experiments were done at about 80 days into the growth cycle. The plants were watered regularly, and the light cycle consisted of 14 hours days and 10 hour nights.

The experiments were divided into the following two areas: instrument verification and plant stress testing. Instrument verification consisted of testing the filter positioning system for alignment, alignment of the leaf clamp, and the effects of light guide positioning. After these preliminary experiments were completed and the necessary design corrections were made, the instrument was then tested on actual stressed and non-stressed plant samples.

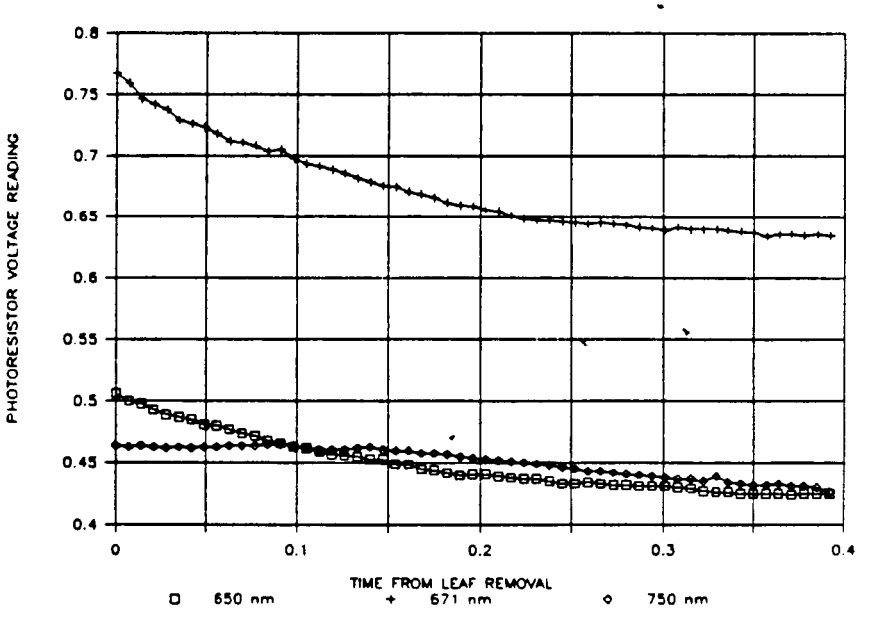

Figure 7. Spectrometric Measurements (Removed Leaf)

Cut Leaf Experiment. The purpose of the first experiment conducted was to measure transmittance light through a severed plant leaf at the three chosen wavelengths. Severing the plant leaf from the plant is a quick way of inducing stress on the leaf. It is probable that the increase in light transmittance was caused by the decreasing chlorophyll levels in the severed leaf (Figure 7). The experimental procedure was to sever the leaf from the plant and insert it into the leaf clamp for the duration of the experiment. Measurements of light transmittance were taken at regular intervals for each of the specific wavelengths over the eight hour period.

The results of this experiment show that there is a definite decrease in absorbance at the chlorophyll absorbing wavelengths. It is probable that the increase in light transmittance was caused by the decreasing chlorophyll levels in the severed leaf (Figure 7). When stress is induced by severing the leaf, the decrease in absorbtion at 671 nm is more pronounced than that at 650 nm.

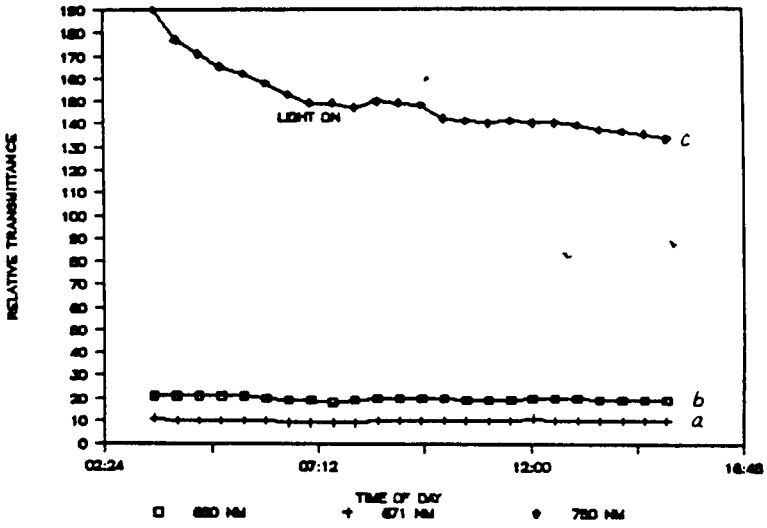

Figure 8. Light Absorption (Live Leaf)

Night to Day Transition for Live Leaf. The next experiment was conducted to determine if there was any interference caused by external light passing through the neoprene cushions. This

was done by placing the leaf clamp on a live leaf for the duration of the experiment and regularly measuring the transmittance at the three wavelengths. The experiment began at 3:00 am, and the growth chamber light came on at 7:00 am. The results of the experiment are shown in Figure 8. The graph shows that there was no measured change in the light transmittance levels for the wavelengths corresponding to the absorption peaks of chlorophyll a and b. Also, there was no visible discontinuity in the measured light intensity for any of the measured wavelengths. This seems to verify that no external light affected the measurements. Thus any changes in the measured light transmittance are a result of biological in the plant.

The other observation made from this experiment was that the transmittance of light at 750 nm dropped considerably over the period of the experiment. It was assumed that this drop in transmittance is due to a certain amount of stress caused by placing the clamp over the leaf for the duration of the experiment. After the experiment, inspection of the leaves revealed that the neoprene pads left small impressions on the area around the measurement spot. This cell damage could possibly cause excessive transpiration around the measurement spot, thus affecting the chlorophyll free material at this spot. This problem could possibly be alleviated by increasing the area of the neoprene pad, reducing the pressure on the leaf, or using a more resilient material for the pad.

Clamp Placement and Contact Damage. The purpose of the next two experiments was to measure the variation in transmittance induced by removing and replacing the leaf clamp in the same position. It is assumed that there will be variation in the measurement when the clamp is removed and replaced due to imperfect repositioning of the clamp. This variation could be also be caused by damage to the leaf by the clamp, by misalignment of the clamp, or by changes in the positioning of the clamp on the leaf. Since the random variation due to

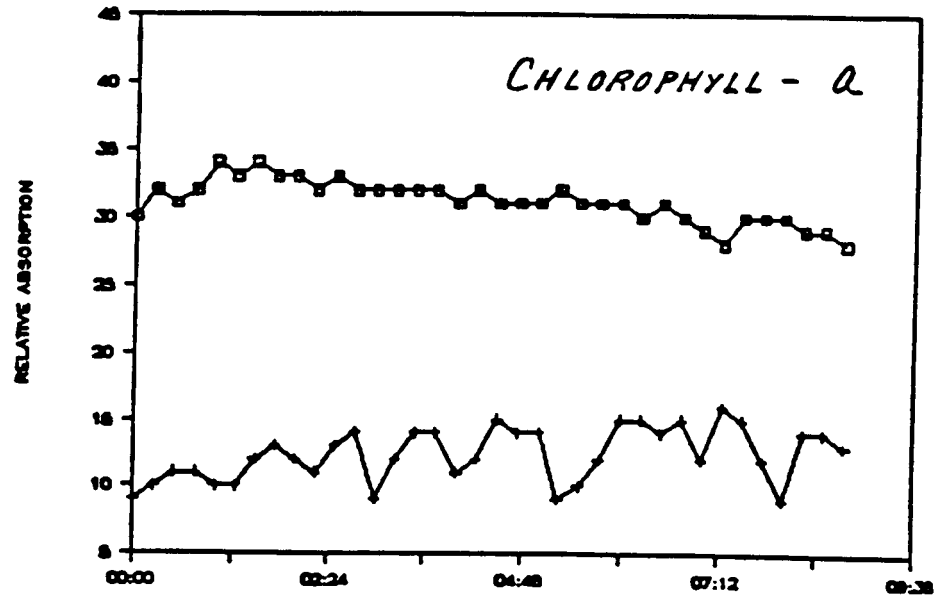

Sampling Interval = 15 min

671 nm ON + 671 nm ON/OFF

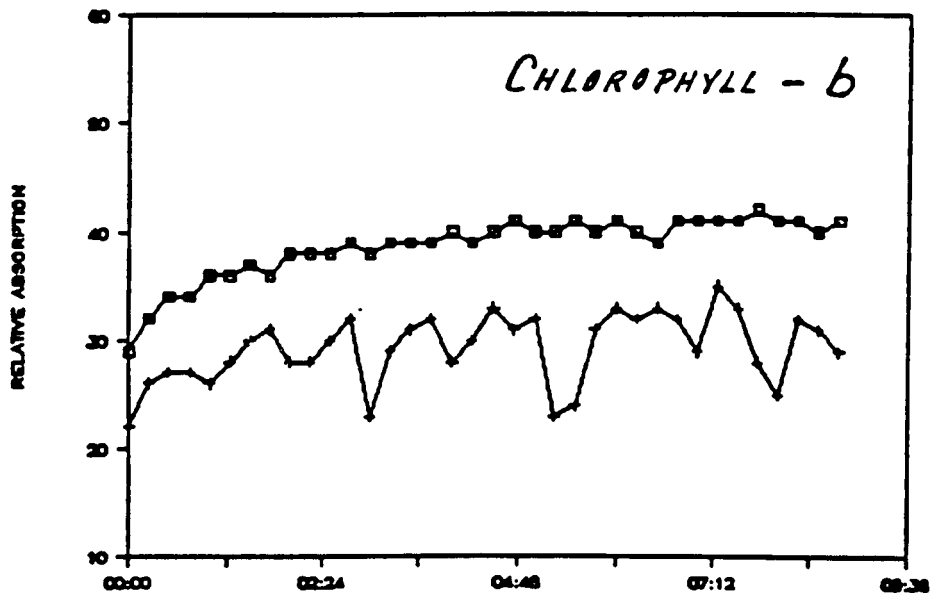

Sampling Interval = 15 min

650 nm ON + 650 nm ON/OFF

Figure 9. Comparison of Sampling Techniques at 671 and 650 nm

repositioning of the clamp would have to be taken into account when deciding whether the chlorophyll level in the leaf has actually dropped, it is important that the range of variation be measured and quantified.

Clamp Contact Effects: The first experiment consisted of two parts; measuring the transmittance with the clamp left on and measuring transmittance with the clamp removed immediately after the measurement. In both cases the transmittance measurements were made on one third of the way from the leaf tip and stem, and one half the way between the center vein and leaf's edge. In the clamp on/off experiment, care was taken to place the clamp in the same position to minimize variations caused by actual differences in chlorophyll concentration. The measurements were made over a ten hour period. The data from the experiments are shown in Figure 9. The figure shows that there is a considerable amount of variation induced in the transmittance measurements when the clamp is taken off and repositioned. This fluctuation around the center value is most likely due to inaccurate positioning of the clamp, changes in the orientation of the leaf due to repositioning, and/or misalignment of the fiber optic cable over the photodiode due to repositioning of the clamp. Little can done to correct for fluctuations caused by the first two factors; but it may be possible to use an "area averaging" scheme, such as measuring over a larger area or "scanning" the clamp over the leaf to measure the transmittance over a larger section of the leaf.

Clamp Location: The second experiment was to test for variation in measured transmittance due to differential concentrations of chlorophyll and chlorophyll-free mater in the plant leaf. The experiment was designed to measure the transmittance at the three wavelengths as a function of the spot being measured on the leaf. A rectangular matrix was laid over the leaf by sectioning the leaf into three zones each at right

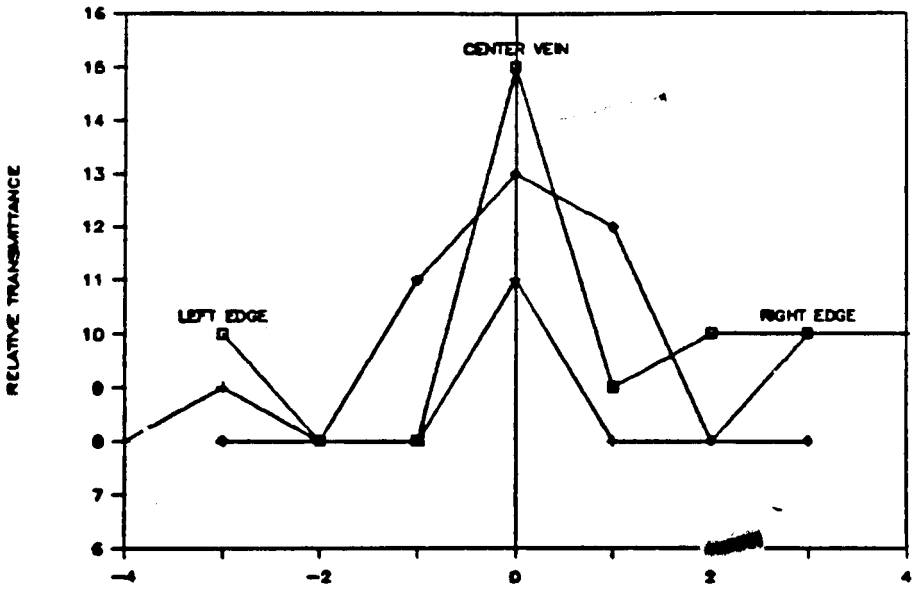

671 nm

Leaf Tip + Leaf Middle Leaf Stem

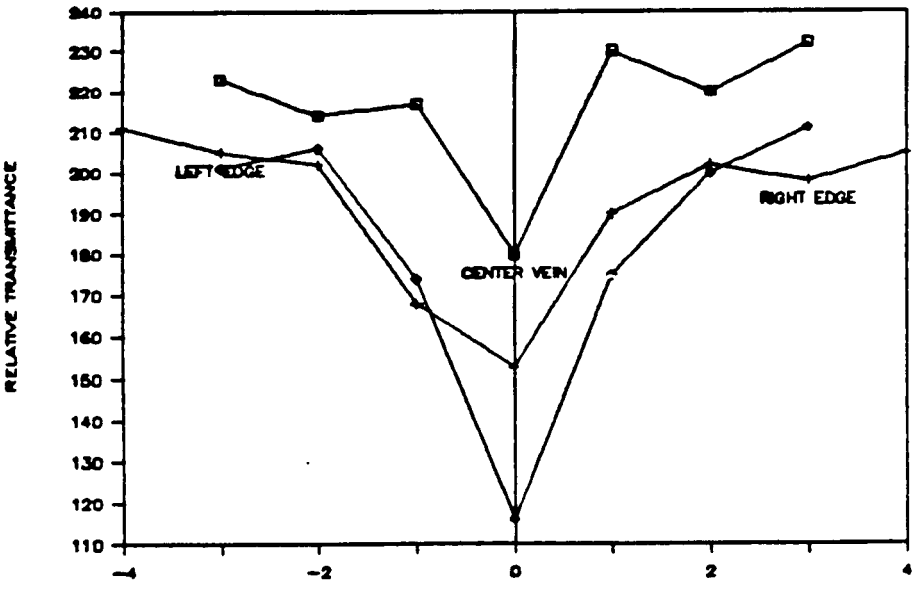

750 nm

Leaf Tip + Leaf Middle Leaf Stem

Figure 9. Light Transmittance (Live Leaf)

angles to the center vein; One section near the leaf tip, one near the center, and one close to the stem. Each of these sections was further divided into equal offsets from the center vein. Measurements were then taken at each point on the leaf. Plots of the measurements are shown in Figure 10. This figure verifies expected values. The chlorophyll concentration is fairly constant throughout the leaf itself, but the concentration is much lower it the stem of the plant, which is represented by "offset 0" for all three of the sections. On the other hand, the transmittance for the chlorophyll free structure is much lower near the vein of the leaf, and this is due to the thicker structure in this part of the leaf. These two observations coincide with visual observations; The veins of the leaf are yellow due the lower chlorophyll levels in this area, and the absorption in the veins at wavelengths that are not absorbed by chlorophyll is much higher due to the relatively thicker structure.

Physical and Chemical Stress. These experiments were run concurrently for 13 hours on three separate collards plants; One plant was a control plant, one plant had a physical stress induced upon it, and the other was induced with a chemical stress. Transmittance values were measured on three leaves for each of the plants; One young leaf at the top, one middle aged leaf, and one large leaf near the bottom of the stem were measured. Data was collected every half hour on the same spot. Several measurements were made on the stressed plants before the stress was applied to obtain a baseline value.

Control Plant: The purpose of this experiment was to measure the variation of measured transmittance due to repositioning of the leaf clamp, and to have a control to compare the stressed plant measurements with. The bottom leaf of the control plant was in an advanced stage of chlorosis due to senescence (aging). The experimental data, shown in Figure 11,

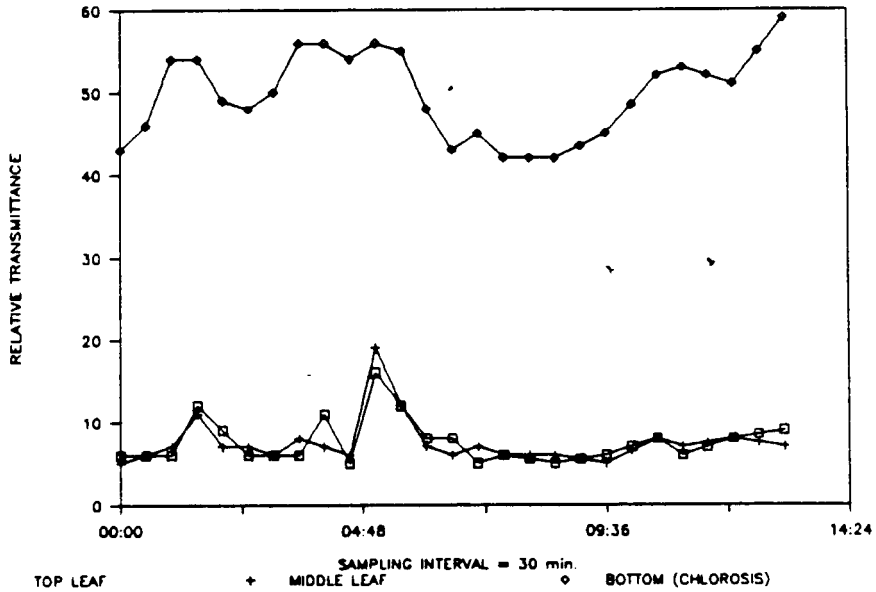

Figure 11. Control Plant: No Stress Induced (671 nm)

shows that there is no trend in the transmittance over time. One observation is that the transmittance for the bottom leaf that had begun to chlorosis was much higher that the transmittance for the two other leaves. This supports the presumption that the spectrometer is actually measuring the chlorophyll levels. Also, the transmittance for the two healthy leaves is relatively equal, and the two bottom plots of the transmittance over time are surprisingly similar.

Physical Stress: The purpose of this experiment was to find if a change in transmittance could be detected when the induced stress did not directly induce chlorosis. The physical stress was induced by rubbing the leaf surface with fine grade sand paper, thus breaking the surface cells of the leaf and allowing the water to transpire quickly from the surface. The data in Figure 12 shows no trend in changes of light absorption over the period of the experiment which suggests that variation in measurements are due to the positioning of the clamp. This is not surprising, since the chlorophyll would not be directly affected by a physical stress until the leaf begins to dehydrate.

ORIGINAL PAGE IS
OF POOR QUALITY

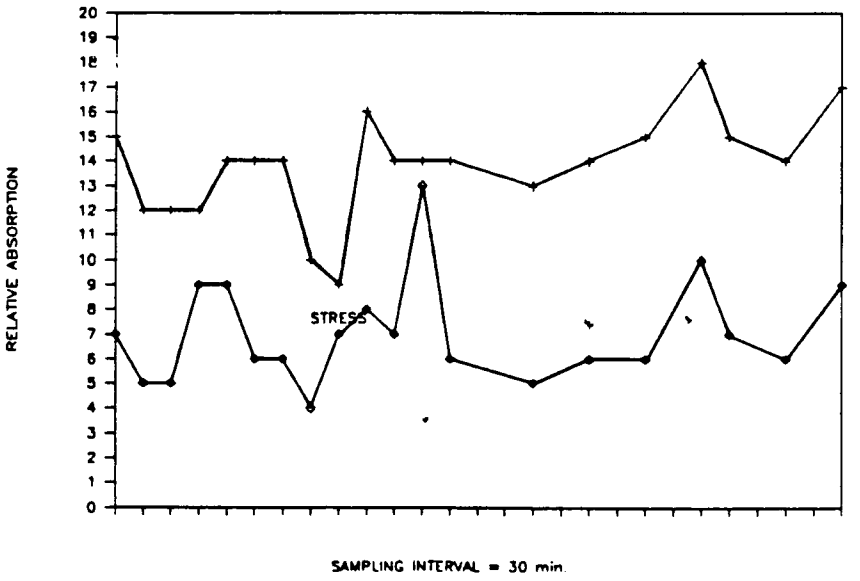

Figure 12. Physically Induced Plant Stress (650 and 671 nm)

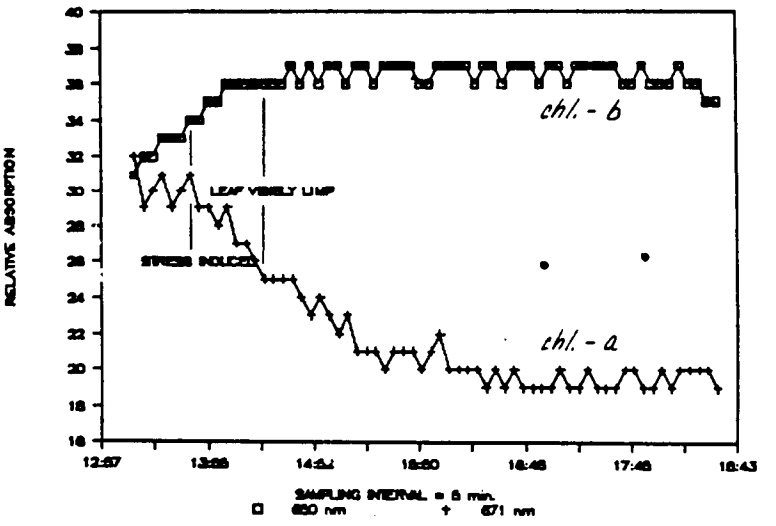

Figure 13. Chemically Induced Plant Stress (650 and 671 nm)

Chemical Stress: The purpose of this experiment was to show any changes in chlorophyll caused by introducing a toxin into the plant tissue. A leaf was severed from the plant after 2 hours of baseline measurements and the stem was placed in a solution of 30% hydrogen peroxide (H_2O_2). This chemical is a strong oxidizer which should decompose the chlorophyll and eventually bleach the leaf. The clamp was left on the leaf for the duration of the experiment to eliminate any variation due to clamp repositioning. The experimental data, shown in Figure 13, shows that there is a drastic decrease in the transmittance at 671 nm, which corresponds to the absorption peak of chlorophyll a. This is the opposite of the expected result, since the transmittance should increase drastically as the concentration of chlorophyll begins to decrease. This inconsistency from the expected result may be due to an absorption peak of H_2O_2 that corresponds to that of chlorophyll a. The transmittance at 650 nm, which corresponds to chlorophyll b, rises as expected. It was noted that the plant leaf never turned visibly yellow during the 13 hours that the experiment was run, although the leaf did become limp soon after the stress was induced.

CONCLUSION

A change in chlorophyll levels in plant leaves is one of the best indicators of common plant stresses. The Plant Stress Sensor (PSS) designed by the EGM 4001 class is a specialized spectrometer which measures in vivo chlorophyll levels in plant leaves. The measurement procedure is simple, quick, and induces little stress on the plant leaf.

Test results seem to indicate that the PSS does measure chlorophyll levels in leaves. Inducing a stress onto the plant causes an increase in the transmittance through the leaf of light of the same wavelength as the absorption peaks as chlorophyll. It is assumed that this increase in transmitted light is a result of a decrease in chlorophyll levels in the plant leaf, but further testing is necessary to verify this. A change in light transmittance through a plant leaf can be detected long before the chlorosis can be seen, and it is hoped that this change can be detected before the stress does irreversible damage to the plant.

An experiment conducted on a live unstressed plant during a "night to day" transition showed that external light levels did not affect the measurements. Thus the sensor may be used in either a day or night lighting environment without shielding the detector.

Another experiment done on stressed and unstressed plants indicates that the PSS can measure changes in light transmittance when a chlorophyll-destroying plant stress in induced onto the plant. Also, it was shown that the transmittance measured on a unstressed plant is fairly constant, except for a small amount of random variation that results from the removal and repositioning of the clamp on the plant leaf. Except for the areas around the veins and near the leaf tip, the chlorophyll level were fairly constant in the test plant type, so it does not seem important to place the clamp on the exact same spot for a series of measurements.

There are several problems associated with using the PSS to warn of changes in chlorophyll level in the plant leaf. The detector clamp also damages the leaf slightly when left on the same spot or when it is placed on the leaf carelessly. It is important that the clamp not be placed on a vein, for this will lead to an invalid measurement of leaf chlorophyll level. Another drawback with the PSS is that it may be difficult to make chlorophyll measurements for some plant types, such as wheat of lettuce, that have leaves that are incompatible with the leaf clamp design.

Also, a difficulty associated with using chlorophyll level as a stress indicator is that some stresses may not affect chlorophyll levels until the plant is incurable. Any stresses that affect only a small area of a plant may also elude result in a normal chlorophyll measurement unless the infected area happens to be measured.

RECOMMENDATIONS FOR FUTURE DEVELOPMENT

Further Experimentation

Several additional experiments will need to be conducted on the plant health sensor to determine its performance characteristics. Extensive testing will show if the sensor is performing under the specifications it was designed for.

Wavelength Selection. The sensor was designed to produce light wavelengths at 650, 671, and 750 nm to measure transmittance. A spectral scan at the delivery point of the fiber optic cable will reveal the true frequencies of light being passed to the leaf and measured by the photodetector. Much attention will be given to the 750 nm filter, as a third-order harmonic at 375 nm would be transmitting light in a region responsive to plant tissue [2]. New or additional filters may be required to filter out unwanted harmonics revealed by a spectroscopic scan.

Calibration of Spectrometer. It will be neccessary to determine the sensitivity of our spectrometer for measuring the chlorophyll transmittance values determined on a plant leaf must be compared to those achieved through known spectroscopic means. The chlorophyll would have to be isolated and the transmittance determined by a spectrophotometer for the same leaf followed by calibration of the sensor with the data obtained to insure that the spectrometer is actually measuring chlorophyll. [3]

Age Dependence. Chlorophyll distribution is related to the age of the plant leaf due to protein synthesis and degradation factors. An age versus chlorophyll concentration profile would need to be determined to correct for differences in leaf age.

Realistic Plant Stresses. Nutritional variability, toxin addition, and pathogen invasion vary the distribution of chlorosis on the plant leaf in the same manner. Each type of stress would cause a heterogeneous distribution of chlorosis and experiments would need to determine how these variables influence transmittance measurement. Some possible stresses are:

1. Water stress
2. Low light levels
3. Nutrient stress -- deficiency and toxicity
4. Physical trauma -- root, stem and leaf damage
5. Pathogen invasion

Possible Future Implementation of PSS

In an actual implementation of the PSS for the sensing of plant health in future space missions, the design of such a system would incorporate several advanced features to make it more efficient.

Robotic Clamp Manipulation. In order to minimize human interaction, the placement of the detector clamp could be performed by a robotic system. The accurate placement of the detector clamp on the plant to be measured could be done by a video pattern recognition system that could determine the position of the plant leaves. Such a system would consist of a video camera on the robotic clamping arm and an artificial intelligence system that would interpret the video signal and accurately place the clamp on the desired position on the plant to be measured.

Use of Laser as a Light Source. Traditional optical elements are prone to burn out or become misaligned, therefore a future implementation of this system would use a tunable laser system to provide the light of the required wavelengths. If future advancements allow the miniaturization of these lasers,

they could be placed on the detector clamp, thus eliminating the need for a light guide (Figure 14). Also, since a laser beam contains such a narrow bandwidth on light, external light would not have to be shielded out. This means that the detector clamp would not have to come in contact with the leaf surface.

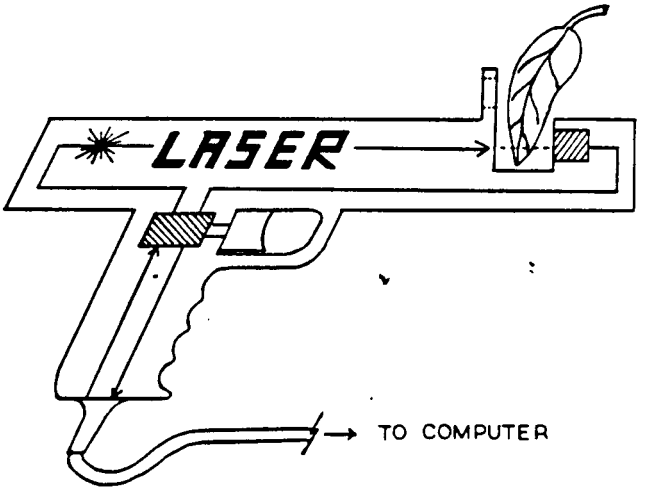

Figure 14. Future PSS

Chlorophyll level measurements would be made by "scanning" the laser across the leaf surface and measuring the transmitted light level with a photodetector that is aligned with the laser on the opposite side of the leaf.

Plant History Analysis. To increase the confidence in the decision about the health of a plant, the most recent measurement of chlorophyll levels could be compared to the past levels of that plant and to chlorophyll level of other plants of that type as the plant ages. In this way, insignificant fluctuations and/or variations due to the life cycle of the plant in the chlorophyll level can be accounted for using statistical analysis, thus decreasing the likelihood of false warnings. Using this data interpretation method will also decrease the time between the onset of a plant stress and the decision (with maximum confidence levels) that there is a problem with a plant or plants.

REFERENCES

1. A. Lehninger, Principles of Biochemistry, Worth Publishers Incorporated, New York, 1982, pp. 645-674.

2. John Sager, April 1988, Personal Communication, J. F. Kennedy Space Center, Titusville, FL.

3. John Sager, January 1988, Personal Communication, J. F. Kennedy Space Center, Titusville, FL.

4. 1987 Annual Reference Catalog For Optics, Science And Education, Edmund Scientific, Barrington, NJ, 1987, pp. 66-69, 104-105.

5. Corion 1986 Catalog, Corion Corp., Holliston, MA, 1986, pp. 24-45.

6. Radio Shack 1988 Catalog, Tandy Corp., Fort Worth, TX, 1987, p. 130.

7. Photodiodes: Including Si, GaAsP and GaP Photodiodes, Hamamatsu Photonics K. K., Hamamatsu City, Japan, 1987, p. 14.

8. Data Acquisition and Control, MetraByte Corp., Taunton, MA, 1983, pp. 85-89.

APPENDIX A

Optical Component List and Specifications [4,5]

Lenses.

L1: Collimating lens

Source:	Edmund Scientific	P/N: PN-A-94-257
Type:	Plano-convex	
Diameter:	30 mm	
Focal Length:	50 mm	

L2: Converging lens

Source:	Edmund Scientific	P/N: PN-A-32-243
Type:	Double convex	
Diameter:	29 mm	
Focal Length:	28 mm	

Interference Filters.

F1: Chlorophyll a

Source:	Edmund Scientific	P/N: PN-A-30-930
Wavelength:	671 nm	
Tolerance:	$\pm$ 5 nm	
Diameter:	25 mm	

F2: Chlorophyll b

Source:	Corion	P/N: S10-650-F-F241
Wavelength:	650 nm	
Tolerance:	$\pm$ 5 nm	
Diameter:	25 mm	

F1: Chlorophyll free structures

Source:	Corion	P/N: S10-750-F-H335
Wavelength:	750 nm	
Tolerance:	$\pm$ 5 nm	
Diameter:	25 mm	

Fiber Optic Cable.

Source:	Edmund Scientific	P/N: PN-A-40-644
Type:	Flexible bundle	
Length:	36 in	
OD:	0.125 in	

SIDE VIEW

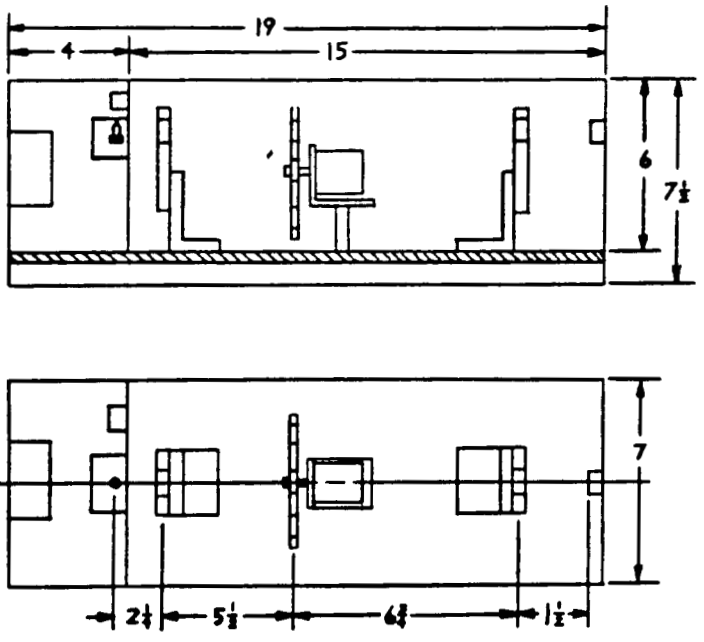

TOP VIEW

SPECTROMETER CHASSIS

TOP VIEW

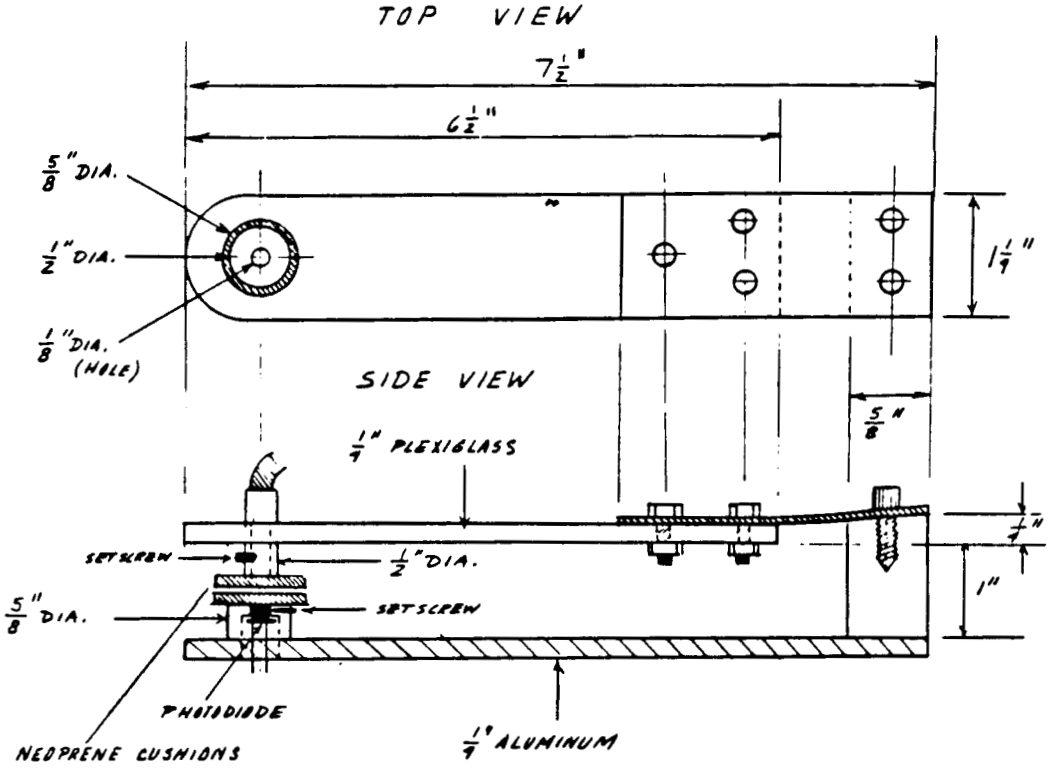

DETECTOR CLAMP

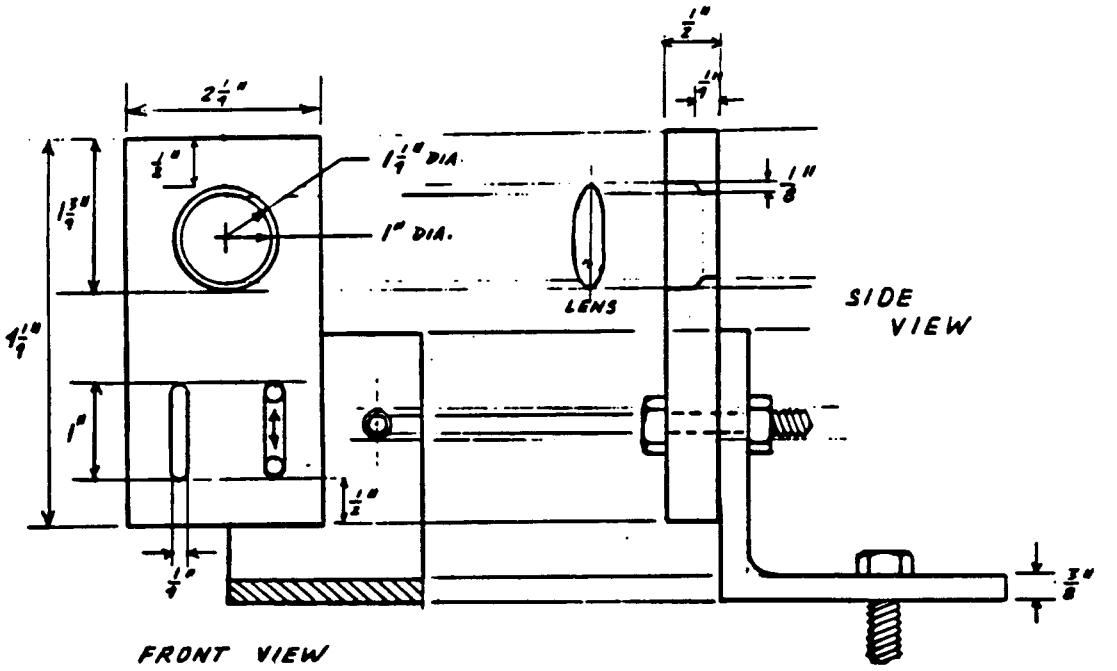

LENS HOLDER

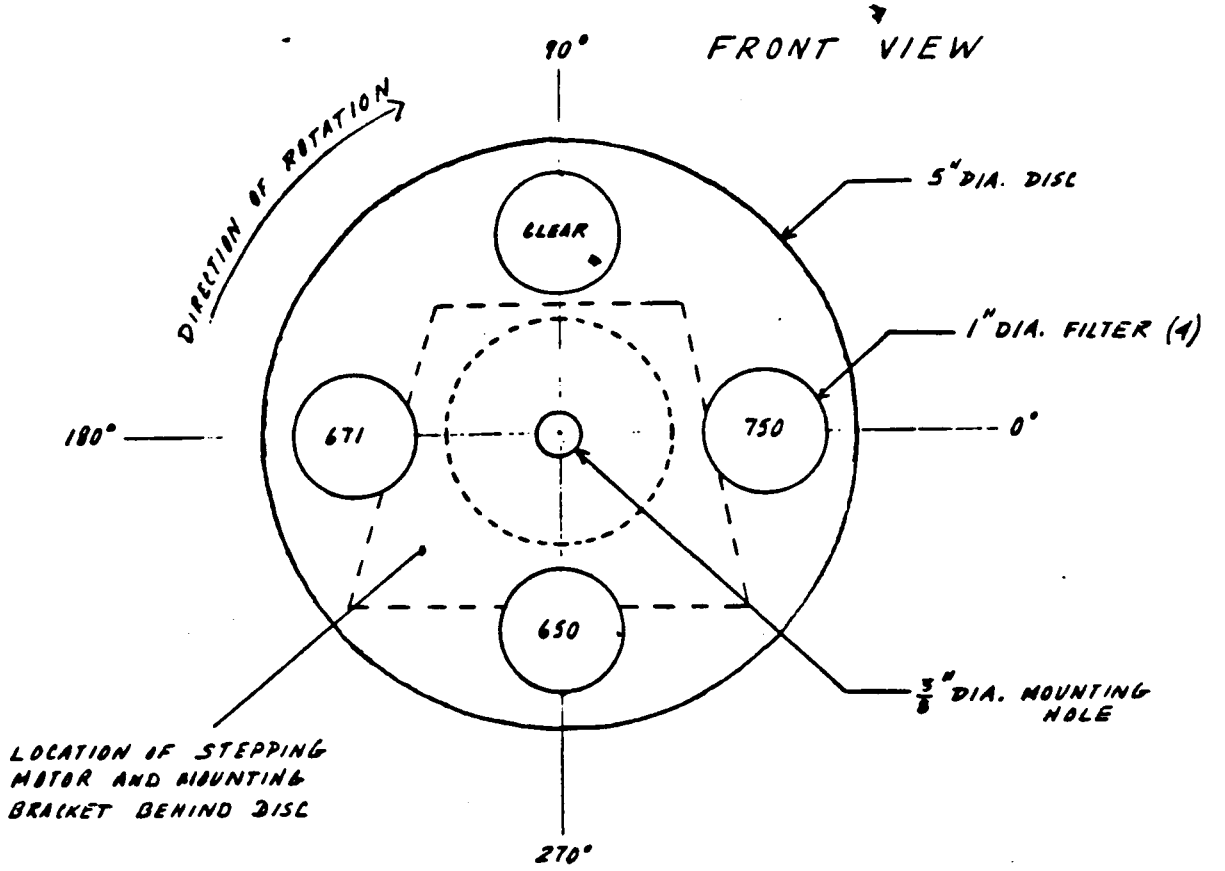

INTERFERENCE FILTER DISC

APPENDIX B

Specifications of Interface Box Electrical Components List [6]

Resistors.	(22)	1/2 watt 5% tolerance
Transistors.	(6)	T1 - T6
Type:	NPN-BJT 2N2222	
Case:	TO-18	
h_{FE}:	35 (@ V_{CE}=10 V, I_C=0.1 mA)	
I_{CMAX}:	800 mA	
V_{CEO}:	30 VDC	
V_{CBO}:	60 VDC	
V_{EBO}:	5 VDC	
Pwr. Diss.	500 mW	
Relays.	(4)	RLY1 - RLY4
Type:	SPDT subminiature	
Voltage:	5 VDC	
Resistance:	70 ohms	
Current:	72 mA	
Contact Rating:	2 A @ 125 VAC	
	(2)	RLY5 - RLY6
Type:	SPST reed	
Voltage:	5 VDC	
Resistance:	250 ohms	
Current:	20 mA	
Contact Rating:	1 A @ 125 VAC	
LEDs.	(8)	LED1 - LED8
Type:	369HHD	
Color:	red	
V_F:	1.8 VDC	
V_R:	5 VDC	
I_{FMAX}:	20 mA	
Pwr. Diss.	75 mW	
Fuses.	(2)	F1 - F2
F1:	1.5 A (@ 4 VDC)	
F2:	0.5 A (@ 16 VDC)	

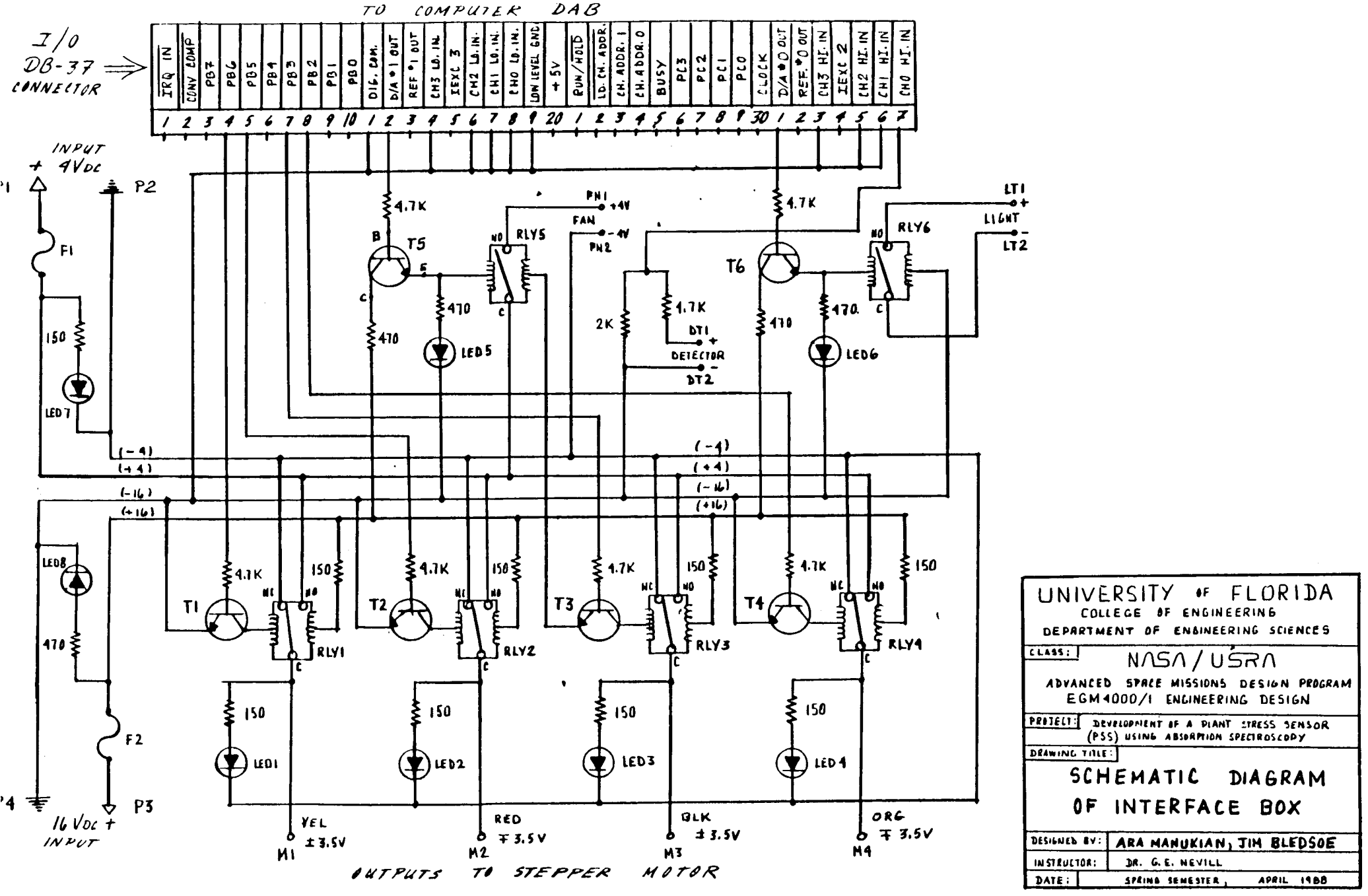

UNIVERSITY OF FLORIDA
COLLEGE OF ENGINEERING
DEPARTMENT OF ENGINEERING SCIENCES

CLASS: NASA / USRA
ADVANCED SPACE MISSIONS DESIGN PROGRAM
EGM4000/1 ENGINEERING DESIGN

PROJECT: DEVELOPMENT OF A PLANT STRESS SENSOR (PSS) USING ABSORPTION SPECTROSCOPY

DRAWING TITLE:

SCHEMATIC DIAGRAM OF INTERFACE BOX

DESIGNED BY:	ARA MANUKIAN, JIM BLEDSOE
INSTRUCTOR:	DR. G. E. NEVILL
DATE:	SPRING SEMESTER, APRIL 1988

APPENDIX C

Specifications of Spectrometer Electrical Components List [7]

Photodiode.

Source:	Hamamatsu Photonics K. K.
Type:	Silicon PNN^+ photodiode
Model#:	S1226 - 5BK
Case:	TO-5
Peak Wavelength:	720 $\pm$ 50 nm
Range:	320 - 1000 nm
Effective Area:	5.7 mm^2
Size:	2.4 X 2.4 mm

Light Source.

Source:	Sylvania
P/N:	
Type:	Quartz-Halogen
Wattage:	55W
Voltage:	12 VDC

Stepper Motor.

Source:	Shinano Kenshi Co., Ltd.
Model#:	STH - 57D208
P/N:	101311 - 001 Rev. R
Steps per Rev:	200
Voltage:	3 VDC
Current:	1.2 A

Cooling Fan.

Source:	Sprite
Model#:	SU2E1
Voltage:	115 VAC
Current:	0.08 / 0.07 A
Frequency:	50 / 60 Hz
Blade Diameter:	3 in
Flow rate:	30 CFM

FUNCTIONAL SCHEMATIC FOR SPECTROMETER

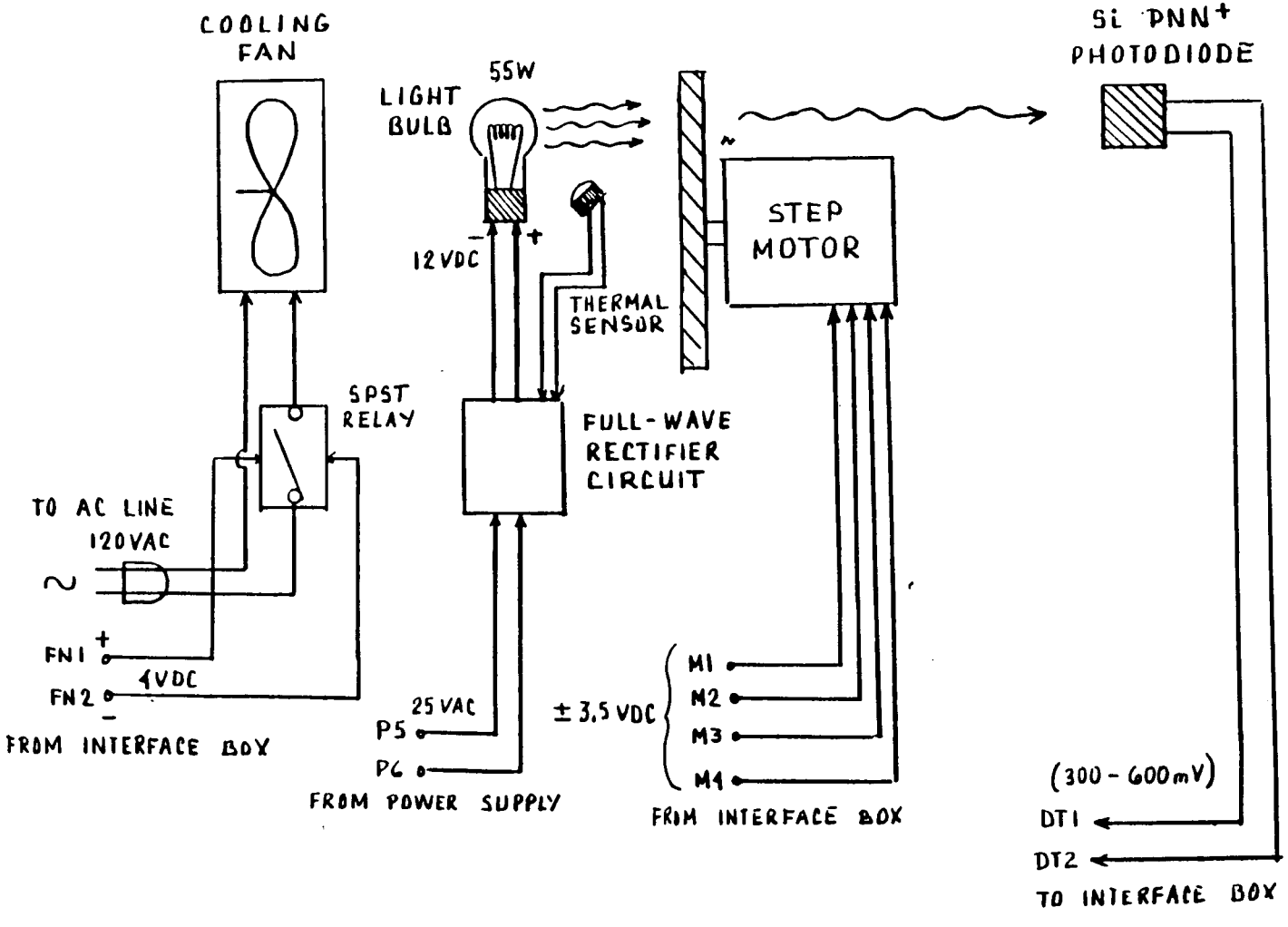

UNIVERSITY OF FLORIDA	
COLLEGE OF ENGINEERING	
DEPARTMENT OF ENGINEERING SCIENCES	
CLASS:	NASA / USRA
	ADVANCED SPACE MISSIONS DESIGN PROGRAM
	EGM 4000/1 ENGINEERING DESIGN
PROJECT:	DEVELOPMENT OF A PLANT STRESS SENSOR (PSS) USING ABSORPTION SPECTROSCOPY
DRAWING TITLE	ELECTRONIC COMPONENTS OF SPECTROMETER BOX
DESIGNED BY:	ARA MANUKIAN, JIM BLEDSOE
INSTRUCTOR:	DR. G. E. NEVILL
DATE:	SPRING SEMESTER, APRIL 1988

APPENDIX D

Specifications of Data Acquisition Board [8]

Source:	MetraByte Corp.
Model:	DASCON-1

Power Consumption.

+5 V supply:	450 mA typ. / 600 mA max.
-5 V supply:	8 mA typ. / 15 mA max.
+12 V supply:	70 mA typ. / 100 mA max.
-12 V supply:	60 mA typ. / 100 mA max.

Analog Input.

Resolution:	12 bits plus sign. (0.5 mV / bit)
Accuracy:	0.01% or reading ± 1 bit
Full Scale:	± 2.0475 V
Polarity:	Automatic
Zero:	Automatic
Overvoltage:	Continuous signal channel to 120 V RMS 5 seconds all channels to 120 V RMS
Configuration:	Full differential
Common Mode Range:	± 2 V min.
Common Mode Reject:	60 dB min., 70 dB typ.
Input Current:	1 nA max. @ 25 C
Input Filter:	Switchable on each channel 30 dB atten. @ 60 Hz 0.09 sec. settling time to 0.01% for FS step
Temperature:	Gain or FS, ± 25 ppm / deg. C max.
Coefficient:	Zero, ± 10 uV / deg. C max.

A/D Specification.

Type:	Integrating dual slope with auto-zero
Resolution:	12 bits plus sign
Conversion Rate:	30 conversions / sec. min.
Monotonicity:	Guaranteed over operating range
Linearity:	± 1 bit
Zero Drift:	1 uV / deg. C max.
Gain Drift:	5 ppm / deg. C max.

Instrumentation Amplifiers.

Allocated Channels:	Channel 0 and/or 1 (max. 2)
Gain Ranges:	10, 100, or 1000
Gain Error:	@ 10 -- 1.5% max. / 0.6% typ. @ 100 -- 0.5% max. / 0.1% typ. @ 1000 -- 1.5% max. / 0.4% typ.
Gain Nonlinearity:	0.01% typ. / 0.05% max.

Drift:	@ 10 -- 10 uV / deg. C typ.
	@ 100 -- 2 uV / deg. C typ.
	@ 1000 -- 1 uV / deg. C typ.
Gain Drift Coeff:	@ 10 -- 5 ppm / deg. C typ.
	@ 100 -- 5 ppm / deg. C typ.
	@ 1000 -- 15 ppm / deg. C typ.
Input Current:	10 nA max. / 2 nA typ. @ 25 C
Common Mode Range:	-2.7 V to +3.8 V min.
Common Mode Reject:	@ 10 -- 105 dB typ. / 90 dB min.
	@ 100 -- 120 dB typ. / 94 dB min.
	@ 1000 -- 130 dB typ. / 114 db min.
Overload Capacity:	120 V RMS continuous single channel

Digital I/O.

Output Lo Voltage:	0.45 V max. @ I_{sink} = 1.7 mA (1 TTL load)
Output Hi Voltage:	2.4 V min. @ I_{source} = 200 uA
Darlington Drive:	4 mA max. / 1 mA min. with R_{ext} = 750 Ohm
Input Lo Voltage:	0.8 v max. / -0.5 V min.
Input Hi Voltage:	2.0 V min. / 5.0 V max.
Input Current:	$\pm$ 10 uA max.

APPENDIX E

Single Plant Measurement Program Listing

The following appendix is a listing of the program used to take samples of a single plant without removing the clamp between samples. It is written in GWBASIC to be run on an IBM PC/XT computer with the DASCON-1 A/D board. The computer takes 8 samples for each filter and averages them before writing the three filter values plus white and no light to the disk drive for permanent storage.

```
10 SCREEN 0,0,0
20 CLEAR ,32768! : REM set up BASIC for machine language routine
30 DEF SEG = 0: SG=256*PEEK(&H511) + PEEK(&H510)
40 DASCON1 = 0: SG=(32768!/16) + SG: DEF SEG = SG
50 BLOAD "dascon1.bin",0
60 REM reset all variables
70 DASCON1 = 0: MD% = 0: CH% = 0: DIO%(0) = 0: DIO%(1) = 0
80 REM set the base address from an input file
90 OPEN "I", #1, "DASCON1.ADR": INPUT#1, BASADR%: CLOSE #1
100 REM empty paper image for simulated strip chart recorder
110 HEALTH% = 2200: DIM ARRAY%(5): DIM SAMPLE%(9)
120 REM ******************************************************
130 CLS:KEY OFF
140 REM print title and instructions for two seconds
150 LOCATE  2,16: PRINT "ENVIRONMENTAL ANALYSIS AND MONITORING
SYSTEM"
160 LOCATE  3,25: PRINT DATE$, TIME$
170 LOCATE  5,20:PRINT"Press (S) to take a sample reading"
180 LOCATE  6,17:PRINT"Press ([) and (]) to turn lamp on and off"

190 LOCATE  7,19:PRINT"Press (t) to tale five sample sequence"
200 LOCATE  8,21:PRINT"Press (m) to advance motor 4 steps"
210 LOCATE  9,24:PRINT"Press (q) to quit program"
220 LOCATE 11,1:
PRINT"=============================================================-
==================="
230 PRINT: LAMP = 0: PULSES = 0: TM = 0: MOTORPOS = 1
232 ARRAY%(1)=2^2+2^6: ARRAY%(2)=2^2+2^5: ARRAY%(3)=2^3+2^5:
ARRAY%(4)=2^3+2^6
240 LOCATE 13,1: INPUT "Enter the filename to store the data
on";FF$: IF LEN(FF$)>8 THEN GOTO 240
250 LOCATE 15,1: INPUT "Enter the experiment number for
identification";EXNUM:  IF EXNUM<0 THEN GOTO 250
260 FF$ = FF$ + ".raw"
```

```
270  OPEN "o", #1, FF$: ZERO = 0: PRINT #1, USING "JOB:
##########    ";EXNUM;:PRINT #1, LEFT$(TIME$,5),: PRINT #1,USING
"#####    #####    #####    #####
#####";ZERO;ZERO;ZERO;ZERO;ZERO: CLOSE #1
272 LOCATE 17,1: INPUT "Enter the number of minutes between
samples";MINS:  IF MINS<0 OR MINS>2000 THEN GOTO 272
273 T$=TIME$: TIM=VAL(LEFT$(T$,2))*3600 + VAL(MID$(T$,4,2))*60 +
VAL(RIGHT$(T$,2))
274 S = TIM + MINS*60: HR=INT(S/3600):
MN=INT((S-3600*INT(S/3600))/60): IF MN>59 THEN MN=MN-60: HR=HR+1
275 IF HR>23 THEN HR=HR-24
276 HR$=RIGHT$(STR$(HR),2): MN$=RIGHT$(STR$(MN),2): IF
LEFT$(HR$,1)=" " THEN HR$="0"+RIGHT$(HR$,1)
277 IF LEFT$(MN$,1)=" " THEN MN$="0"+RIGHT$(MN$,1)
278 SP$=HR$+":"+MN$+":00"
280 LOCATE 13,1: PRINT "
                                        ": LOCATE 15,1: PRINT "

      "
281 LOCATE 17,1: PRINT "
                                        "
290 REM
300 A$=INKEY$
310 IF A$="s" THEN GOTO 500
320 IF A$="q" THEN RUN 650
330 IF A$="[" THEN LAMP=4095
340 IF A$="]" THEN LAMP=0
350 IF A$="t" THEN GOSUB 980: GOTO 290
360 IF A$="m" THEN PULSES = 1
370 TM = TM - 1: IF TM<0 THEN TM = 0
380 IF LAMP>0 THEN TM = 50
390 IF PULSES>0 THEN GOSUB 730: GOTO 300
400 REM ******************************************************
410 REM ************ read the A/D channels
420 MD%=8: DIO%(0)=LAMP: DIO%(1)=0: IF TM>0 THEN DIO%(1)=4095
430 CALL DASCON1(MD%, CH%, DIO%(0), DIO%(1), BASADR%)
440 MD% = 0: CALL DASCON1(MD%, CH%, DIO%(0), DIO%(1), BASADR%)
450 LOCATE  3,25: PRINT DATE$, TIME$
460 LOCATE 15,5: PRINT USING "Signal 1: ####.#### V     (######)
 ";DIO%(0)/2000,DIO%(0);
470 PRINT USING "    Health Deviance:#######";DIO%(0)-HEALTH%
480 LOCATE 18,4: PRINT USING "Motor position: ##      Fan
counter:########    lamp state:#######";MOTORPOS;TM;LAMP
482 IF MINS>0 THEN LOCATE 21,20: PRINT "Next sample to be taken
at ";SP$
485 IF TIME$>SP$ AND MINS>0 THEN GOSUB 980: GOTO 273
490 GOTO 300
500 REM ************ digital output section
510 REM PRINT "beginning sample.  Please do not disturb!"
520 MD% = 8 : CH% = 0
530 REM scan keyboard for any depressed keys
540 DIO%(0) = 4095: DIO%(1)=4095
```

```
550 REM call dascon board to turn lamp on
560 CALL DASCON1(MD%, CH%, DIO%(0), DIO%(1), BASADR%)
570 IF DIO%(8)>0 THEN PRINT "ERROR on digital I/O!"
580 FOR T= 1 TO 2000: NEXT T
590 REM see if they want to quit
600 GOSUB 860: REM take 8 samples
610 DIO%(0) = 0: MD% = 8: DIO%(1)=4095: TM=50
620 CALL DASCON1(MD%, CH%, DIO%(0), DIO%(1), BASADR%)
630 IF DIO%(8)>0 THEN PRINT "ERROR on digital I/O!"
640 GOTO 290
650 REM type run 1000 if program crashes with the lamp still on
660 LOCATE 24,1: PRINT "turning lamp off!"
670 DIM DIO%(8)
680 MD% = 7 : CH% = 0
690 DIO%(0) = 0
700  OPEN "I", #1, "DASCON1.ADR": INPUT#1, BASADR%: CLOSE #1
710 CALL DASCON1(MD%, CH%, DIO%(0), DIO%(1), BASADR%)
720 END
730
REM*************************************************************-
********
740 REM**   Turn motor PULSES*4 pulses.  If LSTATE>0 then turn
fan on.    **
750
REM*************************************************************-
********
760 LSTATE=0: IF TM>0 THEN LSTATE=1
800 FOR JJ%=1 TO PULSES: MD%=9: CH%=0: DIO%(0)=LSTATE +
ARRAY%(MOTORPOS)
810 CALL DASCON1(MD%, CH%, DIO%(0), DIO%(1), BASADR%)
820 REM FOR T=1 TO 30: NEXT T
825 MOTORPOS = MOTORPOS + 1: IF MOTORPOS>4 THEN MOTORPOS =
MOTORPOS - 4
827 LOCATE 18,4: PRINT USING "Motor position: ##";MOTORPOS
830 NEXT JJ%
840 PULSES=0
850 RETURN
860
REM*************************************************************-
********
870 REM**   Take 8 samples from channel 1 and average them.
DIO%(0)     **
880
REM*************************************************************-
********
890 SUM%= 0: FOR N = 1 TO 8
900 MD% = 0: CALL DASCON1(MD%, CH%, DIO%(0), DIO%(1), BASADR%)
910 FOR T = 1 TO 250: NEXT T: REM pause for 1/4 sec
920 SUM% = SUM%+ DIO%(0): NEXT N
930 REM LOCATE 24,1: PRINT "  8 samples averaged for channel 1
=";SUM%/2000/8
940 REM PRINT TIME$;:PRINT USING"   voltage:##.###  (#####)
```

```
Health Deviance:#####";SUM%/2000/8,SUM%/8,(SUM%/8)-HEALTH%
950 REM LPRINT TIME$;:LPRINT USING"   voltage:##.###  (#####)
Health Deviance:#####";SUM%/2000/8,SUM%/8,(SUM%/8)-HEALTH%
960 REM IF ABS(SUM%/8-HEALTH%)<50 THEN PRINT "This plant is
healthy!!!!!!!!!" ELSE PRINT "ATTENTION!    This plant is
dying!!!!!"
970 DIO%(0) = SUM%/8: RETURN
980
REM*************************************************************-
********
990 REM**   Take all five samples and put in array samples()
       **
1000
REM*************************************************************-
********
1010 LOCATE 25,17: PRINT "Beginning sample.  Please do not
disturb!"
1020 MD% = 8 : CH% = 0
1030 DIO%(0) = 4095: DIO%(1) = 4095
1040 REM call dascon board to turn lamp on
1050 CALL DASCON1(MD%, CH%, DIO%(0), DIO%(1), BASADR%)
1060 IF DIO%(8)>0 THEN PRINT "ERROR on digital I/O!"
1070 MD% = 9 : CH% = 0: DIO%(0) = 1
1080 CALL DASCON1(MD%, CH%, DIO%(0), DIO%(1), BASADR%)
1090 IF DIO%(8)>0 THEN PRINT "ERROR on digital I/O!"
1100 TM = 10
1110 FOR T= 1 TO 2000: NEXT T
1120 PULSES=24:GOSUB 730:FOR T=1 TO 1   :NEXT T:GOSUB
860:SAMPLE%(1)=DIO%(0)
1130 PULSES=24:GOSUB 730:FOR T=1 TO 1   :NEXT T:GOSUB
860:SAMPLE%(2)=DIO%(0)
1140 PULSES=54:GOSUB 730:FOR T=1 TO 1   :NEXT T:GOSUB
860:SAMPLE%(3)=DIO%(0)
1150 PULSES=49:GOSUB 730:FOR T=1 TO 1   :NEXT T:GOSUB
860:SAMPLE%(4)=DIO%(0)
1160 PULSES=49:GOSUB 730:FOR T=1 TO 1   :NEXT T:GOSUB
860:SAMPLE%(5)=DIO%(0)
1170 LOCATE 23,1: PRINT TIME$,:PRINT USING "BLK:#####
750:#####    650:#####    671:#####
WHT:#####";SAMPLE%(1),SAMPLE%(2),SAMPLE%(3),SAMPLE%(4),SAMPLE%(5)

1180 REM  DIO%(0) = 0: MD% = 7
1190 REM  CALL DASCON1(MD%, CH%, DIO%(0), DIO%(1), BASADR%)
1200 REM  IF DIO%(8)>0 THEN PRINT "ERROR on digital I/O!"
1210 MD%=9: CH%=0: DIO%(0)=0
1220 CALL DASCON1(MD%, CH%, DIO%(ZERO%), DIO%(ONE%), BASADR%)
1230 TM=50: GOSUB 1250
1235 LOCATE 25,1: PRINT "
                                        "
1240 RETURN
1250
REM*************************************************************-
```

```
********
1260 REM**   Append data to disk file for experiment#, time, 5
values.      **
1270
REM*************************************************************-
********
1280 OPEN "I", #1, FF$: OPEN "O", #2, "tmp.dat"
1290 INPUT #1, L$: PRINT #2, L$: IF EOF(1)=0 THEN GOTO 1290
1300 CLOSE #1
1310 PRINT #2, USING "JOB: ##########    ";EXNUM;:PRINT #2,
LEFT$(TIME$,5),: PRINT #2,USING "#####    #####    #####    #####
  #####";SAMPLE%(1);SAMPLE%(2);SAMPLE%(3);SAMPLE%(4);SAMPLE%(5)
1320 CLOSE #2: KILL FF$: NAME "tmp.dat" AS FF$
1330 RETURN
```

APPENDIX F

Multiple Plant Measurement Program Listing

The following appendix is a listing of the program used to take samples of up to ten different plants by removing the clamp after each sample. It is written in GWBASIC to be run on an IBM PC/XT computer with the DASCON-1 A/D board. The computer takes 8 samples for each filter and averages them before writing the three filter values plus white and no light to a disk file for permanent storage. The sampling intervals for each plant are independent of each other and each plant has a separate data file for permanent storage.

```
10 SCREEN 0,0,0
20 CLEAR ,32768! : REM set up BASIC for machine language routine
30 DEF SEG = 0: SG=256*PEEK(&H511) + PEEK(&H510)
40 DASCON1 = 0: SG=(32768!/16) + SG: DEF SEG = SG
50 BLOAD "dascon1.bin",0
60 REM reset all variables
70 DASCON1 = 0: MD% = 0: CH% = 0: DIO%(0) = 0: DIO%(1) = 0
80 REM set the base address from an input file
90 OPEN "I", #1, "DASCON1.ADR": INPUT#1, BASADR%: CLOSE #1
100 REM empty paper image for simulated strip chart recorder
110 HEALTH% = 2200: DIM ARRAY%(5): DIM SAMPLE%(9)
120 REM ************************************************
130 CLS:KEY OFF
140 REM print title and instructions for two seconds
150 LOCATE  2,16: PRINT "ENVIRONMENTAL ANALYSIS AND MONITORING
SYSTEM"
160 LOCATE  3,25: PRINT DATE$, TIME$
180 LOCATE  5,17:PRINT"Press ([) and (]) to turn lamp on and off"

190 LOCATE  6,19:PRINT"Press (t) to tale five sample sequence"
200 LOCATE  7,21:PRINT"Press (m) to advance motor 4 steps"
205 LOCATE  8,20:PRINT"Press (1) - (0) to sample plant 1-10"
210 LOCATE  9,24:PRINT"Press (q) to quit program"
220 LOCATE 11,1:
PRINT"=============================================================-
==================="
230 PRINT: LAMP = 0: PULSES = 0: TM = 0: MOTORPOS = 1: DIM
FF$(10), EXNUM(10)
240 ARRAY%(1)=2^2+2^6: ARRAY%(2)=2^2+2^5: ARRAY%(3)=2^3+2^5:
ARRAY%(4)=2^3+2^6
245 LOCATE 13,1: INPUT "Enter the number of independent
```

```
experiments"; NUMEXPS: IF NUMEXPS>10 OR NUMEXPS<0 THEN GOTO 245
247 IF NUMEXPS=0 THEN MINS=0: GOTO 300
248 FOR EXNUM = 1 TO NUMEXPS
250 LOCATE 15,1: PRINT USING "Enter the filename to store
experiment ## data on";EXNUM;: INPUT FF$(EXNUM): IF
LEN(FF$(EXNUM))>8 THEN GOTO 250
260 LOCATE 17,1: PRINT USING "Enter the experiment number for
identification of experiment ##";EXNUM;: INPUT EXIDNUM(EXNUM):
IF EXIDNUM(EXNUM)<0 THEN GOTO 260
270 FF$(EXNUM) = FF$(EXNUM) + ".raw"
280  OPEN "o", #1, FF$(EXNUM): ZERO = 0: PRINT #1, USING "JOB:
##########    ";EXIDNUM(EXNUM);:PRINT #1, LEFT$(TIME$,5),: PRINT
#1,USING "#####    #####    #####    #####
#####";ZERO;ZERO;ZERO;ZERO;ZERO: CLOSE #1
285 NEXT EXNUM
290 LOCATE 19,1: INPUT "Enter the number of minutes between
samples";MINS:  IF MINS<0 OR MINS>2000 THEN GOTO 290
300 T$=TIME$: TIM=VAL(LEFT$(T$,2))*3600 + VAL(MID$(T$,4,2))*60 +
VAL(RIGHT$(T$,2))
310 S = TIM + MINS*60: HR=INT(S/3600):
MN=INT((S-3600*INT(S/3600))/60): IF MN>59 THEN MN=MN-60: HR=HR+1
320 IF HR>23 THEN HR=HR-24
330 HR$=RIGHT$(STR$(HR),2): MN$=RIGHT$(STR$(MN),2): IF
LEFT$(HR$,1)=" " THEN HR$="0"+RIGHT$(HR$,1)
340 IF LEFT$(MN$,1)=" " THEN MN$="0"+RIGHT$(MN$,1)
350 SP$=HR$+":"+MN$+":00"
360 LOCATE 13,1: PRINT "
                                        ": LOCATE 15,1: PRINT "

      "
370 LOCATE 17,1: PRINT "
                                        ": LOCATE 19,1: PRINT "

      "
380 REM
*****************************************************************-
******
382 REM **  begin the keyboard scanning and wait for sample time
to arive   **
385 REM
*****************************************************************-
******
390 A$=INKEY$
410 IF A$="q" THEN RUN 760
420 IF A$="[" THEN LAMP=4095
430 IF A$="]" THEN LAMP=0
440 IF A$="1" THEN EXNUM = 1: GOSUB 1080: GOTO 380
441 IF A$="2" THEN EXNUM = 2: GOSUB 1080: GOTO 380
442 IF A$="3" THEN EXNUM = 3: GOSUB 1080: GOTO 380
443 IF A$="4" THEN EXNUM = 4: GOSUB 1080: GOTO 380
444 IF A$="5" THEN EXNUM = 5: GOSUB 1080: GOTO 380
445 IF A$="6" THEN EXNUM = 6: GOSUB 1080: GOTO 380
```

```
446 IF A$="7" THEN EXNUM = 7: GOSUB 1080: GOTO 380
447 IF A$="8" THEN EXNUM = 8: GOSUB 1080: GOTO 380
448 IF A$="9" THEN EXNUM = 9: GOSUB 1080: GOTO 380
449 IF A$="0" THEN EXNUM = 10: GOSUB 1080: GOTO 380
450 IF A$="t" THEN EXNUM = 99: GOSUB 1080: GOTO 380
455 IF A$="m" THEN PULSES = 1
460 TM = TM - 1: IF TM<0 THEN TM = 0
470 IF LAMP>0 THEN TM = 50
480 IF PULSES>0 THEN GOSUB 840: GOTO 390
490 REM ************************************************************
500 REM ************ read the A/D channels
510 MD%=8: DIO%(0)=LAMP: DIO%(1)=0: IF TM>0 THEN DIO%(1)=4095
520 CALL DASCON1(MD%, CH%, DIO%(0), DIO%(1), BASADR%)
530 MD% = 0: CALL DASCON1(MD%, CH%, DIO%(0), DIO%(1), BASADR%)
540 LOCATE  3,25: PRINT DATE$, TIME$
550 LOCATE 15,5: PRINT USING "Signal 1: ####.#### V     (######)
 ";DIO%(0)/2000,DIO%(0);
560 PRINT USING "    Health Deviance:#######";DIO%(0)-HEALTH%
570 LOCATE 18,4: PRINT USING "Motor position: ##      Fan
counter:########    lamp state:#######";MOTORPOS;TM;LAMP
580 IF MINS>0 THEN LOCATE 21,20: PRINT "Next sample to be taken
at ";SP$
590 IF TIME$>SP$ AND MINS>0 THEN GOSUB 5000: GOTO 300
600 GOTO 390
750 REM
************************************************************-
******
760 REM type run 1000 if program crashes with the lamp still on
765 REM
************************************************************-
******
770 LOCATE 24,1: PRINT "turning lamp off!"
780 DIM DIO%(8)
790 MD% = 7 : CH% = 0
800 DIO%(0) = 0
810  OPEN "I", #1, "DASCON1.ADR": INPUT#1, BASADR%: CLOSE #1
820 CALL DASCON1(MD%, CH%, DIO%(0), DIO%(1), BASADR%)
830 END
840
REM************************************************************-
********
850 REM**   Turn motor PULSES*4 pulses.  If LSTATE>0 then turn
fan on.    **
860
REM************************************************************-
********
870 LSTATE=0: IF TM>0 THEN LSTATE=1
880 FOR JJ%=1 TO PULSES: MD%=9: CH%=0: DIO%(0)=LSTATE +
ARRAY%(MOTORPOS)
890 CALL DASCON1(MD%, CH%, DIO%(0), DIO%(1), BASADR%)
900 REM FOR T=1 TO 30: NEXT T
910 MOTORPOS = MOTORPOS + 1: IF MOTORPOS>4 THEN MOTORPOS =
```

```
MOTORPOS - 4
920 LOCATE 18,4: PRINT USING "Motor position: ##";MOTORPOS
930 NEXT JJ%
940 PULSES=0
950 RETURN
960
REM*************************************************************-
********
970 REM**   Take 8 samples from channel 1 and average them.
DIO%(0)     **
980
REM*************************************************************-
********
990 SUM%= 0: FOR N = 1 TO 8
1000 MD% = 0: CALL DASCON1(MD%, CH%, DIO%(0), DIO%(1), BASADR%)
1010 FOR T = 1 TO 250: NEXT T: REM pause for 1/4 sec
1020 SUM% = SUM%+ DIO%(0): NEXT N
1030 REM LOCATE 24,1: PRINT "  8 samples averaged for channel 1
=";SUM%/2000/8
1040 REM PRINT TIME$;:PRINT USING"   voltage:##.###  (#####)
Health Deviance:#####";SUM%/2000/8,SUM%/8,(SUM%/8)-HEALTH%
1050 REM LPRINT TIME$;:LPRINT USING"   voltage:##.###  (#####)
 Health Deviance:#####";SUM%/2000/8,SUM%/8,(SUM%/8)-HEALTH%
1070 DIO%(0) = SUM%/8: RETURN
1080
REM*************************************************************-
********
1090 REM**   Take all five samples and put in array samples()
        **
1100
REM*************************************************************-
********
1110 LOCATE 23,17: PRINT "Beginning sample.  Please do not
disturb!"
1115 IF EXNUM<11 THEN LOCATE 25,18: PRINT USING "Taking samples
for experiment ##";EXNUM
1120 MD% = 8 : CH% = 0
1130 DIO%(0) = 4095: DIO%(1) = 4095
1140 REM call dascon board to turn lamp on
1150 CALL DASCON1(MD%, CH%, DIO%(0), DIO%(1), BASADR%)
1160 IF DIO%(8)>0 THEN PRINT "ERROR on digital I/O!"
1170 MD% = 9 : CH% = 0: DIO%(0) = 1
1180 CALL DASCON1(MD%, CH%, DIO%(0), DIO%(1), BASADR%)
1190 IF DIO%(8)>0 THEN PRINT "ERROR on digital I/O!"
1200 TM = 10
1210 FOR T= 1 TO 2000: NEXT T
1220 PULSES=24:GOSUB 840:FOR T=1 TO 1   :NEXT T:GOSUB
960:SAMPLE%(1)=DIO%(0)
1230 PULSES=24:GOSUB 840:FOR T=1 TO 1   :NEXT T:GOSUB
960:SAMPLE%(2)=DIO%(0)
1240 PULSES=54:GOSUB 840:FOR T=1 TO 1   :NEXT T:GOSUB
960:SAMPLE%(3)=DIO%(0)
```

```
1250 PULSES=49:GOSUB 840:FOR T=1 TO 1   :NEXT T:GOSUB
960:SAMPLE%(4)=DIO%(0)
1260 PULSES=49:GOSUB 840:FOR T=1 TO 1   :NEXT T:GOSUB
960:SAMPLE%(5)=DIO%(0)
1270 LOCATE 23,1: PRINT TIME$,:PRINT USING "BLK:#####
750:#####    650:#####    671:#####
WHT:#####";SAMPLE%(1),SAMPLE%(2),SAMPLE%(3),SAMPLE%(4),SAMPLE%(5)

1280 REM  DIO%(0) = 0: MD% = 7
1290 REM  CALL DASCON1(MD%, CH%, DIO%(0), DIO%(1), BASADR%)
1300 REM  IF DIO%(8)>0 THEN PRINT "ERROR on digital I/O!"
1310 MD%=9: CH%=0: DIO%(0)=0
1320 CALL DASCON1(MD%, CH%, DIO%(ZERO%), DIO%(ONE%), BASADR%)
1330 TM=50: IF EXNUM<=NUMEXPS THEN GOSUB 1360
1340 LOCATE 25,1: PRINT "
                                                  "
1350 RETURN
1360
REM*****************************************************************-
********
1370 REM**   Append data to disk file for experiment#, time, 5
values.      **
1380
REM*****************************************************************-
********
1385 LOCATE 25,5: PRINT "Saving the data to file ";FF$(EXNUM);:
PRINT USING " for experiment ##";EXNUM
1390 OPEN "I", #1, FF$(EXNUM): OPEN "O", #2, "tmp.dat"
1400 INPUT #1, L$: PRINT #2, L$: IF EOF(1)=0 THEN GOTO 1400
1410 CLOSE #1
1420 PRINT #2, USING "JOB: ##########    ";EXIDNUM(EXNUM);:PRINT
#2, LEFT$(TIME$,5),: PRINT #2,USING "#####    #####    #####
#####
#####";SAMPLE%(1);SAMPLE%(2);SAMPLE%(3);SAMPLE%(4);SAMPLE%(5)
1430 CLOSE #2: KILL FF$(EXNUM): NAME "tmp.dat" AS FF$(EXNUM)
1440 RETURN
5000
REM*****************************************************************-
********
5010 REM**   Sound an alarm until the user presses a key
             **
5020
REM*****************************************************************-
********
5025 LOCATE 25,1: PRINT "Yo dude!  wakeup!  time to take all the
samples!!!"
5027 FREQ = 100
5029 FREQ = FREQ*1.2
5030 SOUND FREQ,.4
5040 FOR T=1 TO 20: NEXT T
5050 A$=INKEY$: IF A$<>"" THEN GOTO 5055
5052 IF FREQ<2000 THEN GOTO 5029
```

```
5053 GOTO 5027
5055 LOCATE 25,1: PRINT "
                                                "
5060 RETURN
```

MICROGRAVITY PARTICLE REDUCTION SYSTEM

Prepared by

Vanessa Brandon
Michelle Joslin
Lili Mateo
Tracey Tubbs

PRECEDING PAGE BLANK NOT FILMED

SUMMARY

The purpose of this project was to develop a system for food processing in microgravity. Key problems addressed in the design of the system were blade insertion, particle confinement, and blending efficiency. Research on the project was completed as part of the Controlled Ecological Life Support System (CELSS) project. A prototype wheat milling system developed by members of the Food Processing group consisted of a blending container, a set of deployable\retractable blades, and a particle confinement system. A shaft containing the blades is inserted through a one-inch diameter opening in the blending container and the blades are deployed only after the shaft is fully inserted. The particle confinement system consists of a rotating disk which covers the blending container opening when no processing is being performed. Angles of attack given to the blades improve the blending efficiency by inducing a turbulent flow of the wheat around the blades. Testing of the prototype produced favorable results; the system meets several of the key design criteria. Suggestions are presented for solving some of the problems encountered during testing. The wheat milling system developed by the Food Processing group is intended for implementation in a circular track food processing system.

TABLE OF CONTENTS

Introduction.....106
Background Information.....106
Problem Definition.....106
Project Description.....107
Design Criteria.....108

Concepts and Designs.....109
Vacuuming and Blowing.....109
Experiment 1.....109
Experiment 2.....109
Induced Flow Tests.....109
Experiment 3.....109
Experiment 4.....110
Circular Track Food Processing System.....111
Deployable/Retractable Blade Mechanism.....112
Particle Containment 113
Microgravity Simulation.....115

Results to Date.....116

Conclusions.....117

References.....118

INTRODUCTION

Background Information

Higher order plants grown in the Controlled Ecological Life Support System (CELSS) could serve as dietary supplements on long-term manned space missions. Plants harvested from the CELSS growth chamber will require processing to supply the astronauts with nutritional and palatable food products. The food processing systems must operate effectively in microgravity and be fully automated to relieve the astronauts of time-consuming chores.

Little research has been completed on microgravity food processing. Previous work has produced systems far exceeding volume and mass constraints [9].

During the previous semester, the Food Processing Group of EGM 4000 studied conventional milling systems and home milling systems. Research results indicated that a system of multiple blender-like blades would provide efficient particle reduction. The multiple-blade blending system is intended for implementation in a circular track food preparation system which would blend wheat, mix dough, and bake bread. Previous research also led to the decision to blend dry particles instead of wet particles. The final conclusion was to move a wheat-filled container around the circular track food processing system instead of moving the wheat with blowers and vacuums.

Problem Definition

This report addresses the problem of developing a particle reduction system for food processing in microgravity. Leakage of food particles during processing and transportation is a primary design problem. A particle confinement system was designed in conjunction with other system components to minimize leakage. Retractable blades were designed to minimize the size of the

container opening needed for insertion of blending mechanisms.

Unlike conventional milling systems, a microgravity milling system cannot depend on gravity to force the wheat onto the blades. For this reason, the blades must induce a flow of wheat around the container and across the blades.

One design assumption was that the wheat had been cleaned and stored in a closed container in preparation for the blending process. Research was confined to the problems of blade insertion, particle confinement, and blending efficiency.

Project Description

The purpose of this investigation was to develop a system for particle reduction which operates effectively in microgravity while minimizing leakage and human interaction. The investigation centered on the processing of wheat into flour. The prototype wheat milling system is composed of a multi-bladed shaft which is inserted into a blending container, activated to blend the wheat into flour, and then removed from the container.

The project consisted of designing, fabricating, and testing retractable blades, as well as researching blade orientation for optimal blending efficiency. Vacuuming and blowing tests were completed in order to choose a transportation method. The project also included fabrication of a system of fixed blades which was used as a reference to compare the flow induced by the angled blades. The dimensions of the blending container were calculated to produce a system capable of batch processing sufficient flour to meet the daily nutritional requirements of an eight man crew [4].

Design Criteria

The design criteria are as follows:

1. The system must operate in a microgravity environment.
2. The system must be sealed to prevent leakage of the food product.
3. The system must be capable of producing fifteen liters of flour per day to meet the nutritional requirements of an eight member crew [4].
4. Materials should be noncorrosive and nonreactive.
5. The system requires minimal user interaction.
6. The system must be flexible in order to adapt to various food preparation processes.
7. Volume and mass should be minimized.
8. Noise and vibration should be minimized.
9. The system must have an effective purging process to prevent bacteria growth.
10. The air-to-flour ratio must be controlled to prevent explosions.

Vacuuming and Blowing

Experiment 1. In order to test the feasibility of transporting flour using negative pressure, a vacuum cleaner was used to extract flour from a plastic container. One cup of flour was placed in the container and the vacuum was applied for one minute. All of the flour was extracted except for a small film adhering to the walls of the container. These results indicate that vacuuming is an effective method for transporting flour. However, the tests supplied no information on the problem of explosions due to improper oxygen-to-flour levels.

Experiment 2. In the second test, the vacuum cleaner and a compressed air supply were applied concurrently to opposite ends of the flour-filled container. Again, in less than one minute, the entire cup of flour was extracted except for a thin film on the container walls. The test results indicated that combining blowing with vacuuming is also effective, although the combination is not any more efficient than vacuuming alone.

Induced Flow Tests

Experiment 3. In order to test the ability of blades at an angle of attack to induce a flow of wheat around the container, a simple system consisting of three sets of fixed blades was fabricated. The blades were screwed onto a threaded shaft and given an angle of attack of fifteen degrees. The shaft was then attached to a blender motor and encased with a plexiglass cylindrical container. One cup of wheat was placed in the container and the blades were activated. The flow induced by the blades produced three levels of blending corresponding to each of the three levels of blades (Figure 1). The lift produced by the angled blades successfully induced a flow of wheat throughout the

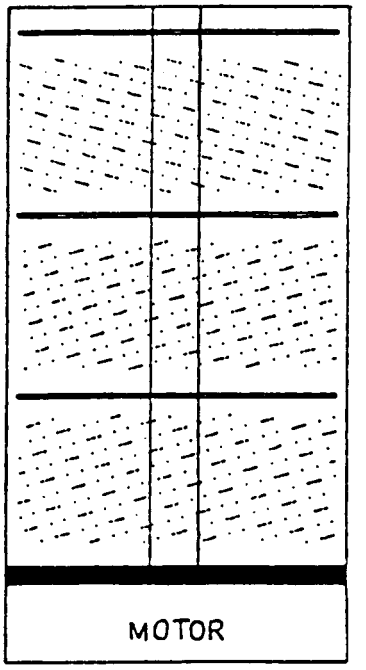

Figure 1. Multi-Blade Flow Test

container, thus increasing the blade-to-grain contact. However, the lift inhibited the wheat from contacting the blades long enough for efficient particle reduction. A different blade orientation may be required to improve the blending efficiency.

Experiment 4. In the fourth test, the top blade was given an angle of attack opposite to the bottom two; the top blade produced a flow in the direction of gravity and the other two blades produced a flow opposing gravity (Figure 2). The opposite angle of attack was given to the top blade to counteract the strong lift produced by the bottom blades. The resulting flow pattern consisted of two blending levels corresponding to the lower two blades and a weak blending level near the top blade. This blade orientation was more effective than the one used in Experiment 3, because the top blade forced the wheat back onto the lower blades, thus producing more efficient particle reduction.

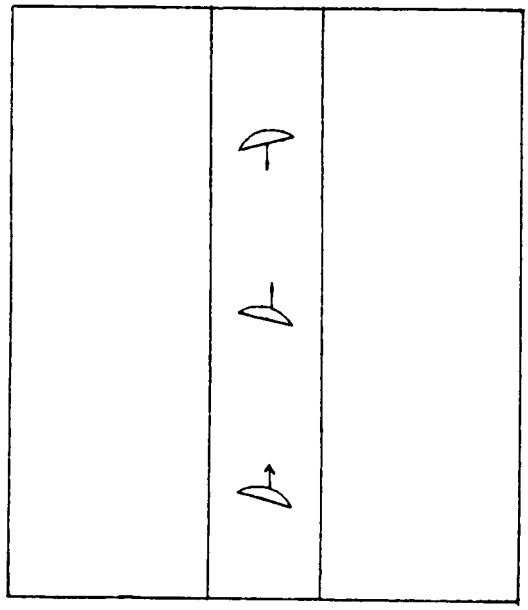

Figure 2. Angle of Attack

Circular Track Food Processing System

Efficiency and compatibility of components are key elements in the design of a microgravity food processing system. One solution is a circular track food processing system on which a blending container moves to ports where various food processing functions are performed. Moving a wheat-filled container around a food processing system eliminates the problem of transporting the wheat with blowers and vacuums. However, a particle leakage problem arises during insertion and removal of processing mechanisms from the container.

A system for baking bread would involve inserting blades into a wheat-filled container to mill flour at port 1, adding water and baking ingredients at port 2, inserting a dough hook and mixing dough at port 3, baking bread at port 4, removing the bread at port 5, cleaning the container at port 6, and returning the container to port 1 to continue the process. Movement of the container along the track is accomplished with stepping motors. Versatility is achieved by adding ports to perform a variety of food processing functions. In addition to baking bread, the

circular track system could include ports for making pasta and other products. Computer programming would dictate the sequence of stops made by the container as it travels along the track.

Deployable/Retractable Blade Mechanism

Retractable blades were designed to minimize the area of the opening in the blending container where processing mechanisms are inserted. The final prototype contains a shaft with three sets of two blades which rest in slots in a one-inch diameter shaft.

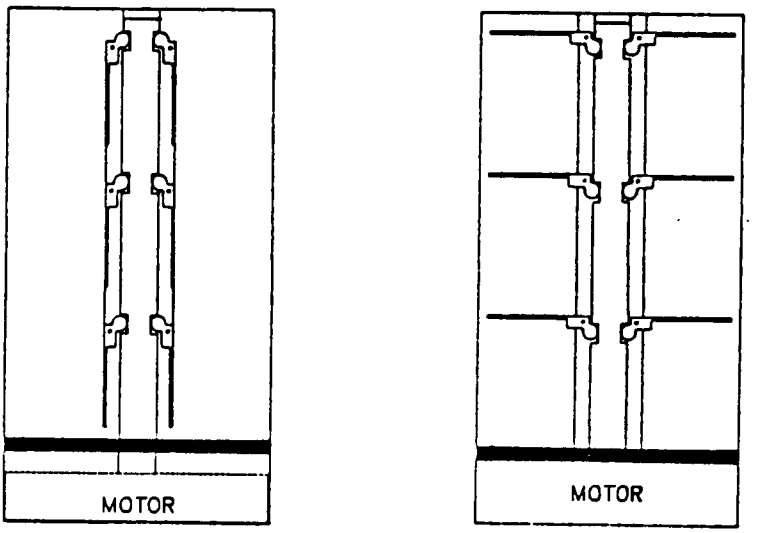

Figure 3. Deployable Blades

The blades are flush with the shaft and remain closed during insertion and removal which allows the shaft to pass through a one-inch diameter hole in the blending container (Figure 3). An internal rod is used to deploy the blades by compressing a spring which displaces the hinges and sweeps the blades 90 degrees outward. The bottom two blades are fixed at a positive 15 degree angle of attack, and the top blade at a negative 15 degree angle of attack. This corresponds to the blade configuration discussed in the Experiment 4 section.

Particle Containment

Particle leakage is one of the major problems associated with milling wheat in low gravity. The mill, as designed for incorporation in the circular track system, would allow flour to escape during blade removal. This problem led to the design and construction of particle-containment devices.

A one-inch diameter hole was drilled in one end of the container and filed slightly for clearance to allow insertion of the one-inch shaft into the blending container. A seven-eighths inch hole was made in a thin circular sheet of rubber which was centered over the larger hole and affixed to the inner surface of container. This feature acts as a seal to prevent flour from leaking around the edges of the shaft during grinding and to wipe the flour from the shaft during blade removal.

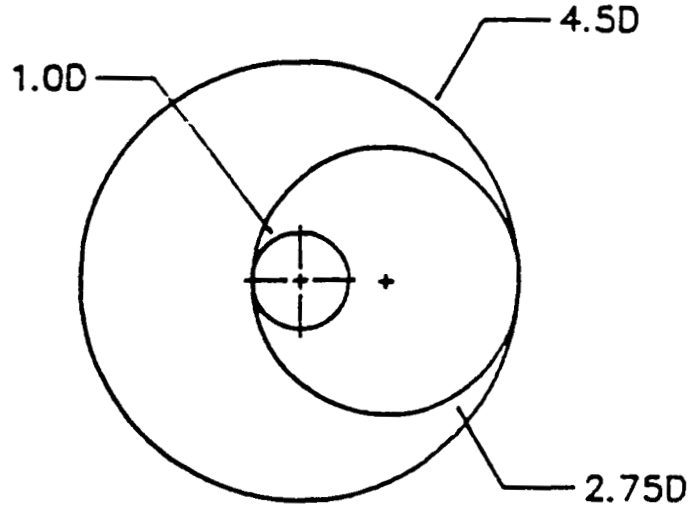

Top View

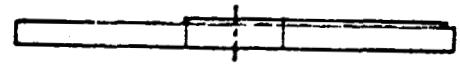

Bottom View

Figure 4. Rotating Circular Disc

A rotating circular disc pinned to the end of the container overs the opening when no processing is being performed. A one-inch hole drilled in the disk is aligned with the container opening during processing as shown in Figure 4. The disc could be rotated to the open position with a small motor or by simple mechanical movements. For experimental purposes, it was opened manually. The disc is returned to a closed position immediately following shaft removal by a tension spring.

The components of the particle containment system function sequentially throughout the milling operation to confine the flour to the container. First, the chamber reaches the milling port and the shaft is lowered to the opening of the chamber in which it is encased. This action triggers rotation of the discs on each container to the open position; the holes are aligned and the shaft is then inserted through the rubber seal, the blades are deployed, and milling is performed (Figure 5). The shaft is then removed from the blending container to a position just inside its housing. This triggers the discs to rotate and cover the openings. When the process is complete, particles which escape from the blending container are trapped inside the chamber which houses the blades and shaft and can then be removed with a vacuum.

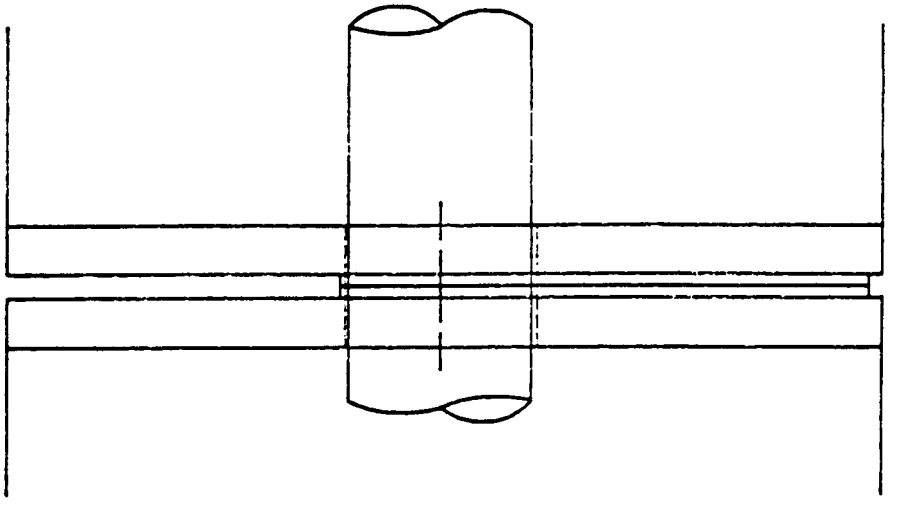

Figure 5. Inserted Shaft

Microgravity Simulation

In order to test the ability of the particle confinement system to prevent leakage of flour in microgravity, the system was designed to work against gravity by inserting the shaft through the bottom of the container of wheat as shown in Figure 6. Prevention of leakage in this "worst case scenario" demonstrates the ability of the system to function in microgravity.

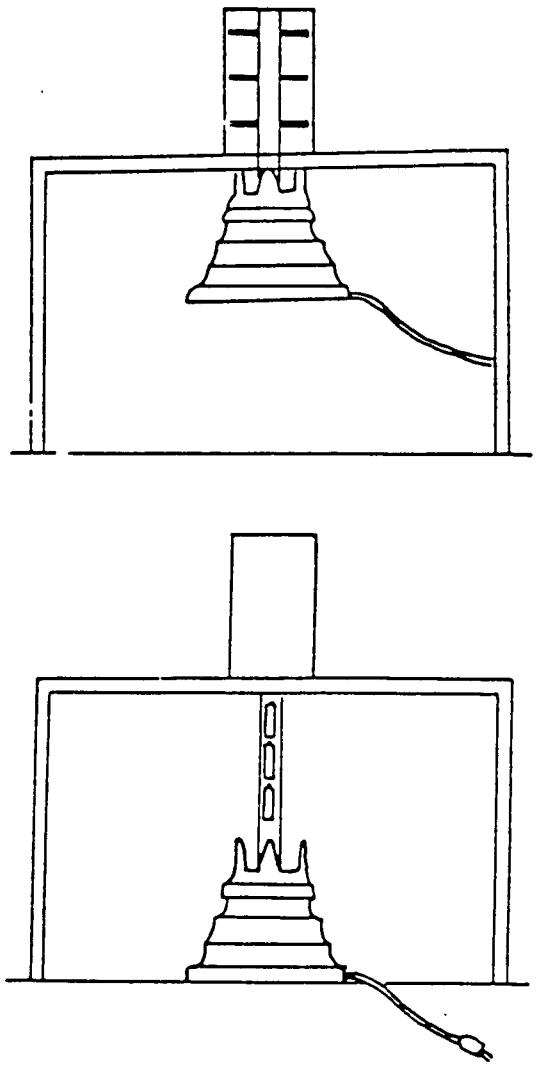

Figure 6. "Worst Case Scenario" Insertion

RESULTS TO DATE

The prototype wheat milling system meets the following design criteria.

1. The system accounts for microgravity operation.
2. The system is sealed to prevent particle leakage.
3. The system requires minimal user interaction.
4. The system is flexible and can adapt to various food processing functions.

Testing completed with the finished prototype produced the following results. The blades deployed when the shaft was fully inserted in the blending container. However, the blades did not deploy to the full ninety degree angle because the original fitting in the end of the container broke, and the replacement had incorrect dimensions. This problem could be corrected by installing the proper fitting in the blending container. The blades successfully produced a flow, but a dead zone occurred in the middle section of the blending container possibly as a result of the improper deployment of the blades or improper blade orientation. The blending efficiency was approximately fifty percent with the flour size varying from fine to coarse. Again, proper blade deployment or a different angle of attack orientation might improve these results. During blade removal, the particle confinement system was effective in preventing leakage of flour particles. A small amount of fine flour escaped from around the container opening during grinding because the tolerance between the shaft and the opening was too high.

CONCLUSION

The wheat milling system developed by the Food Processing Group at the University of Florida is intended for implementation in a circular track food processing system. Design of the wheat milling system included finding methods for inserting food processing tools while minimizing leakage of particles. A system of multiple deployable/retractable blades was designed, fabricated and tested as a solution to the problem of inserting food processing tools while minimizing particle leakage. The prototype blades also meet the design criterium of minimizing user interaction through automation. The angles of attack given to the blades produce a turbulent flow which forces the wheat onto the blades and improves the blending efficiency. The prototype particle confinement system minimizes leakage of food particles and demonstrates the potential for developing a more sophisticated system which would entirely eliminate particle leakage. The proposed circular track food processing system is a versatile solution to the problem of food processing in microgravity; a series of ports along the track could be used to produce bread, pasta, and other food products.

REFERENCES

1. Bates, Dr. Robert. 1987. Personal communication. Department of Food Science and Human Nutrition, University of Florida, Gainesville, Florida.

2. Brown, Ron. 1988. Personal communication. Department of Aerospace Engineering, Mechanics, and Engineering Science, University of Florida, Gainesville, Florida.

3. Cotter, Dr. Norman A. 1988. Personal communication. Department of Aerospace Engineering, Mechanics, and Engineering Science, College of Engineering, University of Florida, Gainesville, Florida.

4. EGM 4000 Class Report. 1987. Design of Components for Growing Higher Plants in Space. Department of Aerospace Engineering, Mechanics, and Engineering Science, College of Engineering, University of Florida, Gainesville, Florida.

5. Fearn, Dr. Richard L. 1988. Personal communication. Department of Aerospace Engineering, Mechanics, and Engineering Science, College of Engineering, University of Florida, Gainesville, Florida.

6. Frier, Ray. 1988. Personal communication. Department of Aerospace Engineering, Mechanics, and Engineering Science, University of Florida, Gainesville, Florida.

7. Jenkins, Dr. David A. 1988. Personal communication. Department of Aerospace Engineering, Mechanics, and Engineering Science, College of Engineering, University of Florida, Gainesville, Florida.

8. Perry, John H. 1963. Chemical Engineers' Handbook. McGraw-Hill Book Company, New York.

9. Prince, Ralph, and William Knott. 1987. Personal communication. J. F. Kennedy Space Center, Titusville, Florida.

10. Teixeira, Dr. Arthur A. 1988. Personal communication. Department of Agricultural Engineering, College of Engineering, University of Florida, Gainesville, Florida.

OVERALL CONCLUSION

The EGM 4001 Design Class has designed and fabricated three elements of a bioregenerative system for higher plant growth, and also fabricated a processing system for particle reduction. The bioregenerative areas including automated seed separation and manipulation as well as plant health sensing using comparative chlorophyll levels of healthy and sick plants. The processing area studied the problem of particle reduction and flow in microgravity.

Through our efforts and the efforts of NASA's fine staff, we have produced research into these areas. The seed separation and manipulation group produced three seeders that employed the minnow bucket seeder principles, using pressure gradients to trap the seeds. This group also produced an electrostatic seed separation system, in which the seeds obtained a temporary charge and were attracted to a collecting area for implantation. The plant health sensing group fabricated an absorption spectrometer, which they used to measure chlorophyll levels of plants. This data was compared to average data for a healthy plant, and relative plant health was determined.

The specific areas that were researched are essential elements to future space missions. The EGM 4000\1 class added numerous insights and novel design concepts relevant to the CELSS project. This initial research may become a part of an actual bioregenerative system, and our future recommendations may be

PRECEDING PAGE BLANK NOT FILMED

implemented or researched. The students feel that this is a worthwhile class, giving students hands-on experience in the complex world of engineering. Therefore, the students wish to applaud the Universities Space Research Association, and hope for its continued confidence and support.