View metadata, citation and similar papers at core.ac.uk
brought to you by CORE
provided by NASA Technical Reports Server

N90-29063

PERCEPTUAL TELEROBOTICS

Panos A. Ligomenides

Cybernetics Research Laboratory, Electrical Engineering Department University of Maryland, College Park, Maryland 20742 and Caelum Research Corp., Silver Spring, Maryland 20901

Abstract

A sensory world modeling system, congruent with a human expert's perception, is proposed. The **Experiential Knowledge Base (E*KB)** system can provide a highly intelligible communication interface for telemonitoring and telecontrol of a real time robotic system operating in space. Paradigmatic acquisition of empirical perceptual knowledge, and real time experiential pattern recognition and knowledge integration are reviewed [1-5]. The cellular architecture and operation of the E*KB system are also examined.

1. Introduction

Intelligent robotic decision making is a dynamic interplay of continually unfolding processes, characterized by approximate reasoning, fuzziness and dynamic readjustment. Problem definition and determination of goals, criteria and conditions, world modeling, planning and learning, are all contingent on perpetual gathering, processing and interpreting of information. In these activities, **knowledge** appears as a precious commodity, whose access, refinement and use can extend the ability for rational reasoning and problem solving.

Real time robotic decision making, totally automated or human-guided, depends critically on the availability of **comprehensible** internal models of the decision making world. Effective operation of adaptive robotic systems requires comprehensible man-machine communication with respect to cognition and command languages. Intelligible perceptual descriptions of the sensory world, based on interactive modeling of a human-expert's perception of it, would strengthen rational decision making.

The sensory world's meaningful structure and activity is evidenced by the underconstrained and often indeterminate **order** embedded in the sensory data. From the incredible richness and complexity of order which is filtered through the limited sensory bandwidths of the physical transducers, meaningful structural, temporal and causal embedded regularities are discerned and interpreted by imposing relevant **empirical elastic templates** of characteristic spatio-temporal **norms** of reference, which have been formed in the course of prolonged and active experience. The relevancy of the elastic templates used at any given instant is determined by the temporally shifting concerns, attention and attitudes of the decision maker. Interactively derived empirical

PRECEDING PAGE BLANK NOT FILMED

elastic templates for given k-norms, $k \in K$, and their subsequent application for real time perceptual recognition and internal modeling, are the pursuits of **Experiential Knowledge Engineering**. We call **experiential** the inferential capture of knowledge by direct associative ordering of sensory data, based on elastic templates which model a human expert's perception of the sensory world. We refer to the empirical elastic templates as "formal description schema" - models of the k-norm, denoted as "fds_K" - models [1-5].

Human perceptual faculties of mapping discerned sensory order into meaningful predicates of probability, possibility or belief, function in a much more qualitative manner than one might deduce from examining most of the vision research literature, which is largely based on the computational framework of optical deconvolution, suggested by Marr, Barrow and Tenembaum [6,7]. Logic-like deductive reasoning about invariable perceptual properties, based on previously established semantics of cognition, seem to follow better the biological paradigm [8,9]. The fds_K-model is a consistent, robust and computationally efficient tolerance model [1-5]. It assesses quantitative **conformity** to the k-norm, which is also expressible with a linguistic label (name) of **resemblance** to a norm. It functions procedurally and progressively on complete or partial data. The assessment is compatible with that of the human-expert whose perception it reflects.

In this paper we propose a telerobotic monitoring and control system, which is based on pattern recognition and internal modeling procedures that perform congruently to the perception of a human expert. This approach to telemonitoring and telecontrol aims in securing a most comprehensible communication interface between the robotic system and the human operator. It is based on modeling the empirical perceptual knowledge of a human expert in a highly interactive empirical knowledge acquisition system. The pattern recognition approach used is "paradigmatic" [9], as explained in section 2. The cellular architecture and operation of a real time recognition and world modeling system, the "Experiential Knowledge Base (E*KB)" system [1-5, and references therein], functioning within the framework of a telerobotic space application as a natural extension of a decision maker's organic abilities, is also examined in section 3. Remarks follow in the concluding section.

2. Paradigmatic Pattern Recognition

2.1 Paradigmatic acquisition of empirical perceptual knowledge.

Pattern recognition is, in essence, an act of inductive inference. It is either the act of **re-cognition**, i.e. of "seeing something1 as something2" [11], or the act of **cognition**, i.e. of forming a class by clustering items with some identifiable common properties. Both cases are now accepted as instances of **recognition** and are based on performing inductive inference.

Inductive inference, is a process of producing a general proposition based on a limited number of particular propositions, such that these become special instances of the former (a somewhat inexact remark, which however gives a general perspective of our argument). Going from particulars to universal, from concrete to abstract, is also the basic inductive function of paradigmatic pattern recognition. In a broad sense, this aspect of induction, which includes the advancement of argument by analogy, is considered to be the secret of the creative process in science.

The execution of induction involves certain creative operations, such as the creation of new hypotheses (abduction) or the identification of characteristic features (percepts) of an object, which are **extralogical**. They are acknowledged to be outside the domain of logical operations, and obviously outside the capability of the digital computer as we have come to know it. They, also, are value-dependent and much like the processes that underline creation in art.

A recognizable pattern is an object which is assessed to be a member of a class. For this reason, a pattern often plays a double role of an individual object and of a class. Logicians would define the concept associated with a pattern, or its class, by its intension or its extension. The intension is the collection of predicates which just defines the concept. The extension is the collection of individual objects which correspond to the concept and make up the class. In other words, the extension is the collection of all the objects that satisfy the predicates included in the intension. However, in real life situations, we "define" classes by class-samples (**paradigms** [10]). Shown a few samples of a "cat", a small child becomes capable of deciding whether any other animal is a cat or not. The child is not given the intension or extension of the class of cats and he seldom makes a mistake, although he may never be capable of defining the intension or extension of the class of cats. Theoretically speaking this is not a definition of a class. Nevertheless, the procedure generates in the human mind the capability of distinguishing a member from a nonmember of a class [10]. Excluding clustering, this procedure describes what we understand as pattern recognition: having been shown a few paradigms (and perhaps a few negative paradigms) of a class, one becomes capable of telling whether or not a new pattern belongs in this class. Together with the ability of clustering, this procedure underlines the schemata of human faculties of inferential capture of classified knowledge, i.e. of perceptual pattern recognition.

In paradigmatic pattern recognition which is based on interactive modeling of human perception, the class-defining elastic templates (the fds_k-models) are derived neither by intension nor by extension. They are derived only by paradigms. If the computer is ever to become capable of doing this job, it has to derive the class-defining features from the paradigms presented to it, so that the task of recognition becomes one of

intensional sorting and assessment of conformity, which the computer is capable of doing. But, the derivation of the class-defining properties from paradigms, is not a machine-feasible operation without human aid, as it is based on extralogical processes. Also, the introduction into the machine of a scale of "distance" for the assessment of conformity/resemblance between objects, can not be done meaningfully without telling the machine **our** value-judgments (often including aesthetic, moral, etc, judgements), which are of an entirely extralogical nature.

Since the inductive faculty can not be formulated as a necessary logical law, its implementation in a computer is often done by formulating it (by human intervention again) as some kind of heuristic principle, like the principle of minimum entropy. In the case of paradigmatic recognition, based on modeling the perception of some specific human expert, where "attention" may be varied at will, we have sought the aid of a human "expert" to identify and valuate the percepts of a reference norm, and to provide measures and methods for the assessment of conformity/resemblance. The interactive procedure for the derivation of the fds_k-models, and their application in pattern recognition, are briefly reviewed below. For more information, the reader is referred to [1-5], or directly to the author.

Samples of norm-patterns and of patterns with perceivable deviations from full conformity to the norm are inputted externally (as they are available), or they are generated by the modeling system. The human expert is called to verify discerned percepts and to assess conformity to the norm of the discerned perceptual organizations. The procedure is highly interactive and gradually leads to embedding the human expert's perceptual knowledge in a fds_k-model. The fds-modeling procedure is composed of three-phases. Early in the interactive session, in conjunction with noise treatment and abstraction operations, the "structural identity" of the k-norm, SkID, is established, to serve as an object locator and as an early perception device. The determination of the norm's percepts and evaluation of the elastic parameters for a full-conformity template, the M^k-model, is done in the second phase. Finally, the determination of conformity assessment procedures and measures and the derivation of the complete fds_k-model, are accomplished in the third phase. The fds_k-modeling procedure is outlined in figure 1.

2.2 Real time experiential recognition.

The real time application of the fds_k-model by programming a computer, in situations where data is sampled sequentially, is illustrated in figure 2. The sensory data is sampled and inputted serially, value-at-a-time: $(Attr_p(Obj_q);value_y;$ @x,t;X,T). In this case the recognition system accumulates an advancing window of sensory data, and it repeatedly tests for: (a) conformity to boundary or initial conditions, or (b) Conformity to structural identity (SkID), before the abstraction-sensitive perceptual overlay (Pk) assessment. In case (a) a window of a few successive samples allows advancing tests for boundary or initial conditions. Note that although

such conditions may be computed and tested progressively using only two advancing data-samples, more samples are included in the advancing test window, in order to test and establish the boundary or initial conditions in the presence of noise and measuring errors. The size of the sampling window depends on the sampling frequency and on the estimated noise and distortion levels. In case (b), the sampling window is stretched enough to allow for a delayed SkID test.

In situations where data may be generated parallely by a sensory "retina", a neural pipeline may be used to implement the fds_K-model, as shown in figure 3. The fds_K-model includes a great deal of parallel operations of data processing and parameter assessment. This fact renders this pattern recognition model suitable for highly parallel implementation. Its inductive operations of order discernment and conformity assessment also make it suitable for realization with neural networks. The illustrated scheme for neural pipelined implementation, applied to 1D retinas, is currently being analysed in the Cybernetics Research Laboratory. An added objective in this endeavor is to generate real time temporal descriptions of scene events with high temporal resolution and small delay.

2.3 Experiential knowledge abstraction and integration.

The task of pattern recognition is to discern "lawful" order embedded in sensory data, and to interpret it by assessing conformity to characteristic constraints (percepts) of a norm. The temporal or spatial patterns of some measurable attribute of an object, Attr(Obj), are classified in accordance to their assessed conformity/resemblance to various reference norms, selected for their relevance. In this process, the role of **abstraction** is fundamental. We recognize physical objects by recognizing the patterns of their attributes (selected for relevance) at some level of abstraction, which provides for the depth of detail required for the decision making task at hand. The procedural and progressive assessment of conformity to percepts of various norms by the corresponding fds_K-models is applied hierarchically to the objects, the attention scenes and to the activities at progressive levels of abstraction of the decision making world. Rule-based abstraction and integration procedures are also used in the implementation of fds_K-models, and for discernment and interpretation of causal relationships and other types of higher complexity order. The use of rule-based abstraction is merited because of the nature of the experiential knowledge, which is ill-structured, modular, often ambiguous and declarative. Such knowledge makes it difficult to represent it and process it with semantic networks, using labeled arcs and nodes.

Experiential knowledge is accumulated in real time in timed push-down buffers (FIFOs), weighted with "forgetting" coefficients. The short memory stacks function within "object-cells" in a cellular organization illustrated in figure 4. Asynchronous abstractions of temporal and spatial knowledge is performed in response to requests from the decision maker.

Attention worlds defined by the decision maker specify portions of the decision making world for which experiential internal models are requested. The requests may be about experiential knowledge referring to recent past, present and anticipated world scenes and activities. Hierarchically functioning processors perform a great variety of concurrent and distributed I/O and processing tasks, which implement pattern recognition, abstraction and integration operations.

Both vertical and horizontal abstraction is performed in the concurrent and distributed cellular architecture shown in figure 4. Attribute or object descriptions of higher complexity and composition are developed in real time along the vertical abstraction hierarchies. Selective cross-cell integration of experiential knowledge is performed along the horizontal abstraction hierarchy.

3. The Cellular E*KB System as a Cognitive Prosthesis

A telerobotic decision making environment for the E*KB system, including other decision support components, communication and distribution network interfaces, is illustrated in figure 5. The decision maker performs tasks of diagnosis, planning and subcommand dissemination, being supported by Data Bases, by consultation Expert Knowledge Bases that contain various kinds of expertise, and by the Experiential Knowledge Base which provides a comprehensible man-machine interface through the human perceptual channel. The E*KB system acts as a cognitive prosthesis to the decision maker's organic abilities for recognition and internal modeling of the sensory world. The E*KB system [1-5] includes the NOESIS interactive subsystem for on-line acquisition of empirical knowledge, the OMIOSIS subsystem for capturing and labeling experiential knowledge embedded in sensory data, and the ICON subsystem for abstraction and integration of experiential knowledge in response to attention subworld specifications. Other components of experiential knowledge processing, such as cause-effect prediction and stability processors, are also included in the E*KB system [1-5]. Research work on these subjects, relating to the development of an integrated E*KB system, is currently conducted in the Cybernetics Research Laboratory and Caelum Research Corporation.

4. Remarks

Reference norms are selected during our long experience guided by relevance-driven acts. When we find some relevance-based resemblance among various objects, which are perceived in connection with some decision making task, we apply a common label to them and we classify them in a "norm" class, forgoing on their many differences. Resemblance, contiguity in time or in space and cause-effect relationships are the kinds of perceptual "order" that enter the process of norm-class formation. In this paper, we have dealt only with the kind of order related to resemblance.

The commonsensical view of "classes" is that of a collection of "similar" objects. We might say that after centuries of scholastic detour, philosophers have come back to this simple-minded yet robust commonsensical view. From the theory of "general concepts" [Hume, Watanabe,10], which is based on the concept of similarity, we deal here with those aspects of similarity which have to do with "similarity of form" and partial conformity to form-relating characteristic perceptual constraints. We refer to this kind of similarity as "resemblance". In humans, it is a product of association formed by mental processes (Hume), which we model with our procedural elastic templates we call "formal description schemata".

Within the limited space available, we have attempted to present the conceptual and the architectural make up of the Experiential Knowledge Base system, which can serve as a cognitive prosthesis and as a comprehensible communication interface in a perceptual telerobotic application.

References

1. P.A.Ligomenides, "The Experiential Knowledge Base as a Cognitive Prosthesis", in VISUAL LANGUAGES, Plenum 1986
2. P.A.Ligomenides, "Modeling Uncertainty in Human Perception", in UNCERTAINTY IN KNOWLEDGE BASED SYSTEMS, Springer Verlag 1987
3. P.A.Ligomenides, "Modeling Experiential Knowledge with Procedural Schemata", in UNCERTAINTY AND INTELLIGENT SYSTEMS, Springer-Verlag 1988
4. P.A.Ligomenides, "Real-Time Capture of Experiential Knowledge", **IEEE Trans. Systems,Man and Cybernetics**, SMC-18,4 1988
5. P.A.Ligomenides, "Capture of Experiential Knowledge by Conformity Assessment", invited lecture, 3rd Int'l Symp. on Knowledge Engineering, Oct.17-21, 1988, Madrid, Spain
6. D.Marr and T.Poggio, "Theory of Human Stereopsis", **J. Opt.Soc. Amer.**, 67:1400 1977
7. D.Marr, "Visual Information Processing", in RECOGNITION OF PATTERN AND FORM, Springer-Verlag 1982
8. A.P.Pentland, "Towards a More Rational View of Logic", **AI Magazine**, 4, 1983
9. A.P.Pentland, (Ed), FROM PIXELS TO PREDICATES, Ablex 1986
10. S.Watanabe, PATTERN RECOGNITION: Human and Mechanical, Wiley, New York, 1985
11. L.Wittgenstein, PHILOSOPHICAL INVESTIGATION, Basil, Blackwell and Mott, Oxford, 1953

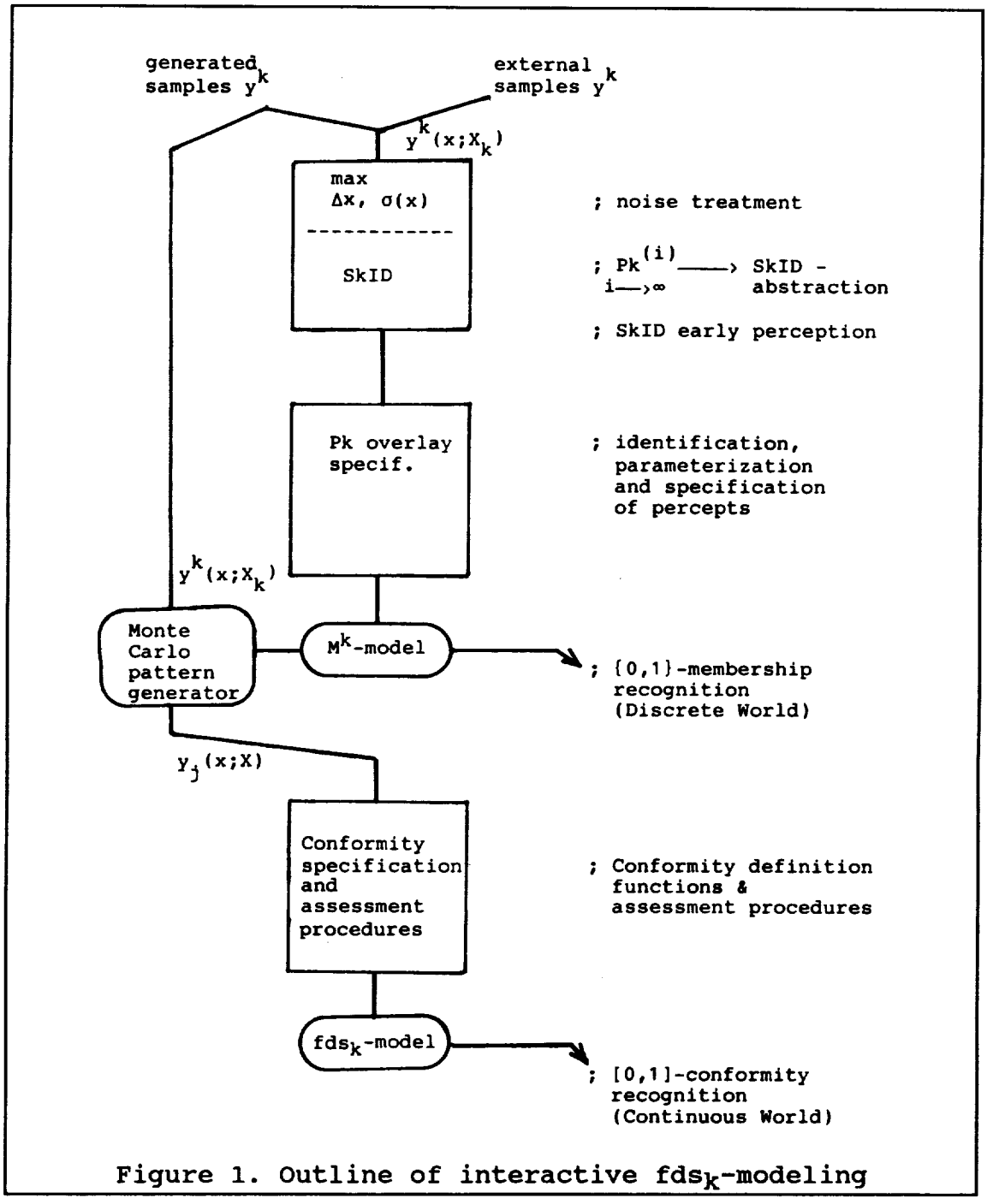

Figure 1. Outline of interactive fds_k-modeling

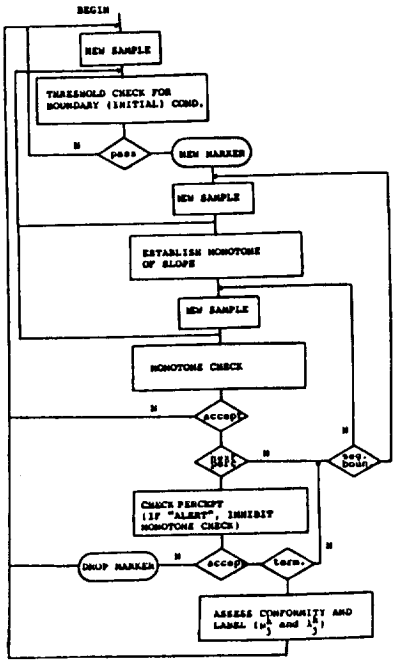

Figure 2. Sequential pattern recognition with fds_k models

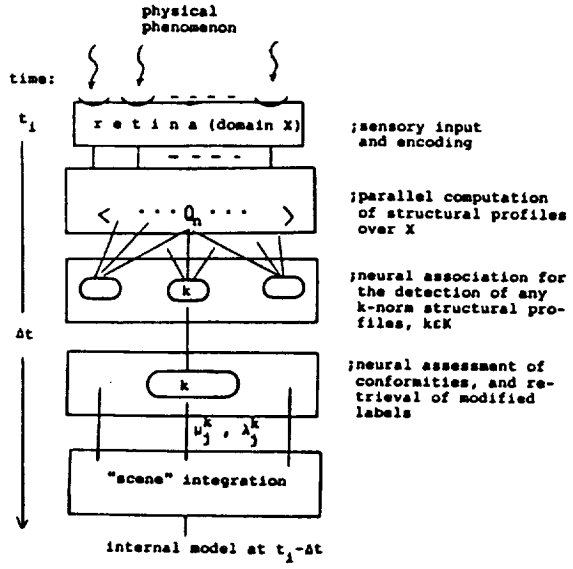

Figure 3. Parallel fds_k recognition with neural pipeline

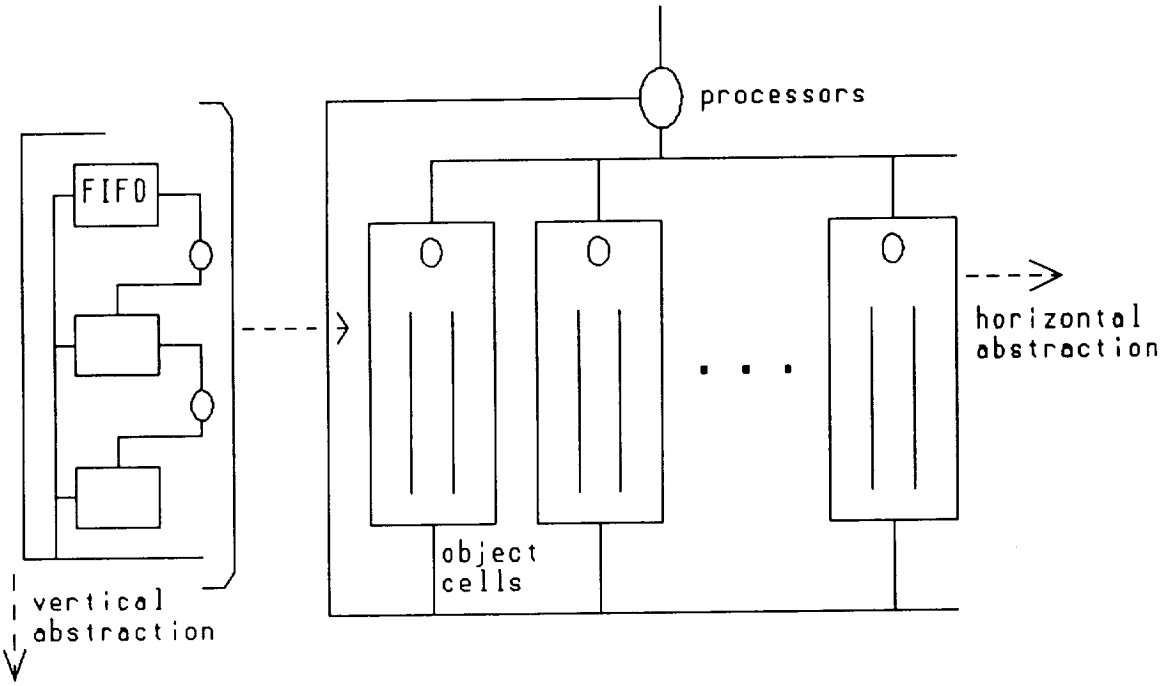

Figure 4. E*KB cellular architecture

...E IS ...R QUALITY

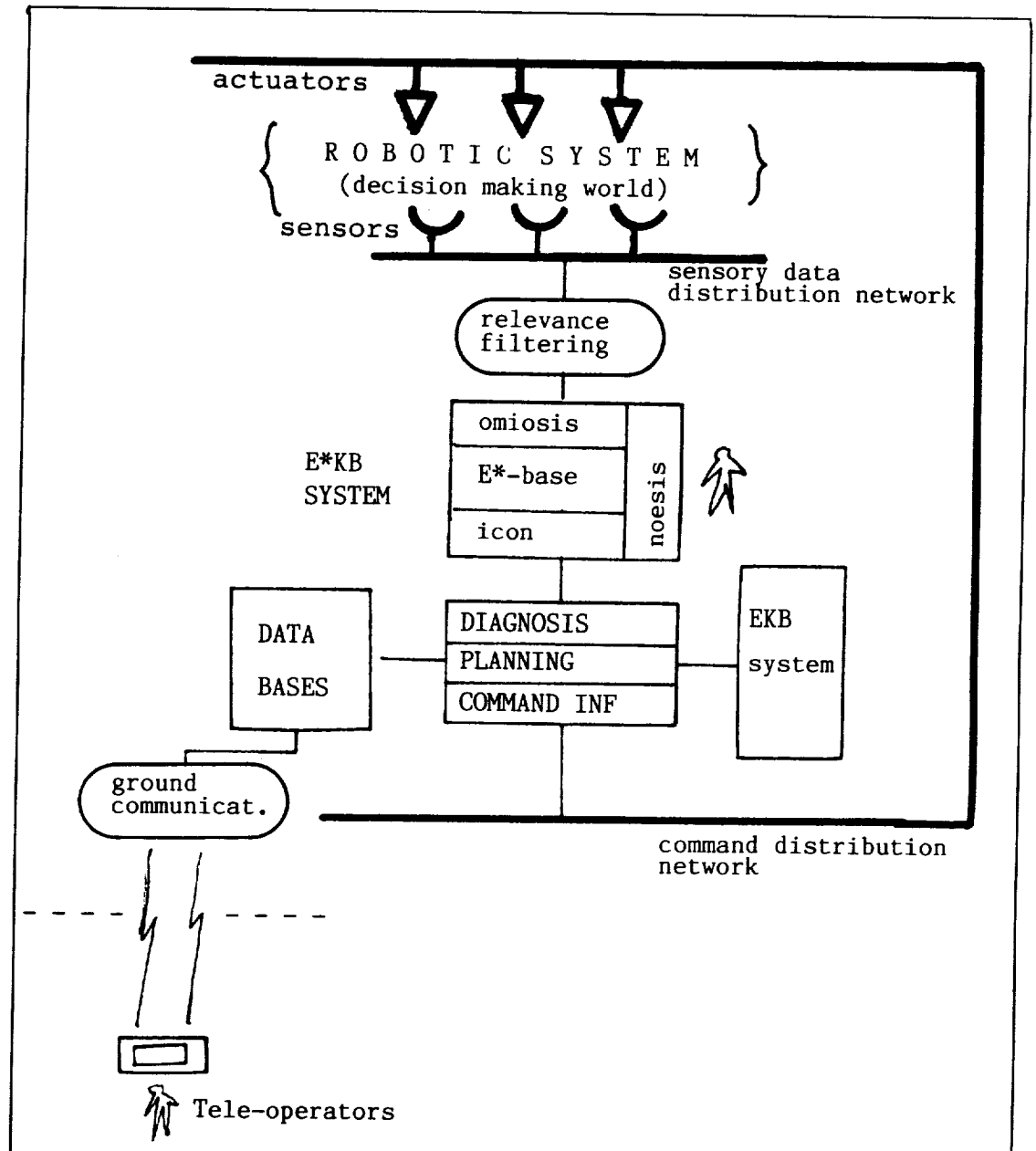

Figure 5. Perceptual telerobotic system architecture