12/31/90
E5780

NASA Technical Memorandum 103658

A Test Fixture for Measuring High-Temperature Hypersonic-Engine Seal Performance

Bruce M. Steinetz
Lewis Research Center
Cleveland, Ohio

December 1990

NASA

A TEST FIXTURE FOR MEASURING HIGH-TEMPERATURE HYPERSONIC-ENGINE SEAL PERFORMANCE

Bruce M. Steinetz
National Aeronautics and Space Administration
Lewis Research Center
Cleveland, Ohio 44135

SUMMARY

A test fixture for measuring the performance of several high-temperature engine seal concepts has been installed at NASA Lewis Research Center. The test fixture has been developed to evaluate seal concepts under development for advanced hypersonic engines, such as those being considered for the National Aerospace Plane. The fixture can measure static seal leakage performance from room temperature up to 1500 °F and air pressure differentials up to 100 psi. Performance of the seals can be measured while sealing against flat or engine-simulated distorted walls, where distortions can be as large as 0.150 in. in only an 18 in. span. The fixture is designed to evaluate seals 3 ft long, a typical engine panel length. The seal channel can be configured to test square, circular, or rectangular seals that are nominally 0.5 in. high. The sensitivity of leakage performance to lateral or axial loading can also be measured using specially designed high temperature lateral and axial bellows preload systems. Leakage data for a candidate ceramic wafer engine seal is provided by way of example to demonstrate the test fixture's capabilities.

E-5780

INTRODUCTION

The seal design requirements of advanced propulsion systems including hypersonic engines being considered for the National Aerospace Plane and advanced 2-dimensional, vectored-thrust turbojet fighter engines are severe. The simultaneous requirements to operate hot while sealing ramjet combustion temperature gases (>4400 °F) with minimal coolant requires advanced design concepts combined with high temperature materials technology. The performances of these key mechanical components must be evaluated using advanced test techniques such as will be described herein, prior to costly engine testing.

Seal concepts being developed for the National Aerospace Plane (NASP) engine are required to seal the many linear feet of gaps between the movable engine panels and the stationary engine sidewalls or splitter walls. These panel-edge seals must prevent the extremely hot, pressurized flow-path gases from escaping past the movable engine panels. Engine performance calculations made in reference 1 determined that the seals must seal static gas temperatures ranging from 1200 °F to 5000 °F, while sealing pressure differentials up to 100 psi. Further complicating the seal's task is the need to accommodate and seal engine-sidewall lateral distortions as large as 0.150 in. in only 18 in. of span.

The objective of this paper is to describe the key design features of a new high temperature linear seal test fixture at NASA Lewis Research Center developed to characterize engine seal performances under conditions of controllable high temperatures and pressures; preloads; and engine sidewall conditions. Some representative seal performance data are included by way of example.

SEAL RIG DESIGN CRITERIA AND OBJECTIVES

A test rig has been built to address the following important engine seal technology development issues:

1. Measure seal leakage rates under engine-simulated gas temperatures ranging from room temperature to 1500 °F, and pressure differentials ranging from 0 to 100 psi.

2. Characterize the sensitivity of seal leakage to lateral seal preload (from 0 to 80 psi contact pressure) and to variable axial preload, (from 0 to 100 lb).

3. Characterize seal sensitivity to important seal-design and materials issues such as differences in coefficients of thermal expansion between the seal and the engine panel.

4. Evaluate seal-to-engine panel integration techniques including methods of minimizing seal end leakage.

5. Validate seal leakage flow models at high temperatures.

DESCRIPTION OF SEAL TEST FIXTURE

Seals that are nominally 3 ft long are tested in the test fixture shown in figure 1. The test seal is mounted in a closely mating seal channel nominally 0.50 in. high as shown in the figure cross section. The seals are preloaded from behind using a series of high temperature Inconel bellows that force the seal against the engine-simulated sidewall that is removed for clarity in the isometric. Engine gases are simulated by the introduction of heated, pressurized air from below.

Heated Gas Supply

Air or inert gas is heated by in-line electric resistance heaters and supplied to the rig plenum chamber prior to impinging on the candidate test seal. A 0.5 in. square ceramic wafer seal is shown in the figure for illustrative purposes. Up to three parallel input flow-paths (see base of test rig in fig. 1) are used to accommodate the considerable range of flows anticipated for the various seal concepts to be tested. Each parallel leg can deliver 0.03 lb/sec flow at 1500 °F for a total of 0.09 lb/sec flow. Using shop air supply, pressure differentials up to 100 psi can be applied.

To prevent an over temperature condition in the in-line heaters for the low flows expected for some of the candidate seals, several preventive measures are taken. A low flow alarm and shut-down sequence is used in the control system to kill power to the heaters in the event that flow goes below a preset minimum. Second, the air heater control system incorporates an overtemperature alarm system that kills power to the heaters if exhaust temperatures get too high. The thermocouple used to sense this temperature is placed close to the heater exhaust. And finally an electrically-isolated thermocouple is placed in contact with the heating element in each stage of the heaters, as shown in figure 2. If the coil temperature exceeds a predetermined "redline" temperature, power is automatically killed to the heater preventing a run-away condition. The thermocouple is electrically isolated by potting it in a thin-wall alumina sleeve. The whole assembly is inserted and sealed in the heater using a pressure-tight fitting.

Surface Mount Heaters

High watt-density conduction heaters are strapped on to the top and bottom of the test rig. Three 3.5 kW heaters are used to ramp the rig temperature up to the desired test temperature using a digital ramp-soak controller. Due to the efficiency of thermal-conduction, these surface heaters supply most of the heat to the rig during heat-up. Employing surface heaters on the top and bottom minimize the thermal gradients and any unnecessary thermal distortions through the 5.5 in. high Inconel test fixture.

When heating the test rig, a ramp-soak profile is followed that prevents the surface heater temperatures from exceeding the rig bulk temperature by more than 200 °F. A typical temperature-time heating profile for the rig using both surface and air heaters is shown in figure 3. The test fixture is heated to 1500 °F in just over 5 hr.

Rig Insulation

To achieve the high test temperatures, the test rig is insulated with a high temperature, low conductivity (1 Btu/ft hr °F) board insulation. As shown in figure 4, 2 in. thick alumina insulating board is fitted closely around the outside of the rig with no gaps or spaces. The front wall of the rig and its insulating board are removed here for clarity.

Leakage Measurement

Leakage rates are measured upstream of the in-line heaters. Leakage is measured in this manner for several reasons. Measuring the mass flow prior to heating to 1500 °F precludes the need to precool the gas before measuring it with room temperature flowmeters. Eliminating the need to capture the leaked gas and then precool it saves considerable expense and complexity. Measuring the leakage flow upstream of the seal also gives a conservative estimate of the actual seal leakage rate. The leakage rate that is measured includes both the seal leakage and any trace leakage at various connections in the rig and around the seal ends.

To qualify the seal integrity of the large threaded joints and the high temperature thread sealing-compound used, a simple experiment was conducted. A pressurized rubber bladder was installed in place of the test seal. As the engine pressure was applied each of the threaded joints was leak-checked with a soap solution. Each joint checked-out successfully.

Pressure Measurement

The pressure differential applied across the seal is evaluated using pitot static pressure taps immediately upstream of the seal. Gage pressure measurements are used since the seal vents to atmospheric conditions and the exiting flow velocities are low. The pressures are measured using solid-state capacitance type transducers. Pressure is supplied to the transducers using suitably long (>7 in.) tubing, to prevent high temperatures from reaching the transducer. Measurements are taken at multiple axial stations to so an accurate average pressure differential is obtained.

Pressures are also measured in the seal cavity behind the seal to determine fluid forces exerted by the simulated engine chamber pressure on the backside of the seal. Pressure supplied to the lateral preload bellows is also measured, from which a seal contact stress is calculated.

Temperature Measurement

Gas temperatures impinging on the seal are measured using fast-acting open-bead thermocouples just upstream of the seal. The thermocouple beads are inserted in the gas stream to measure true gas temperature. For averaging purposes, multiple thermocouples are used along the length of the 3 ft seal. Thermocouples are also placed at the exhaust of the heaters. Temperature readings from these thermocouples are used in independent feedback control circuits for each of the heaters.

Key hardware temperatures such as the seal, the Inconel metal bellows, and the rig temperature are also measured using thermocouples. In all cases, type K (Chromel-Alumel; 2000 °F) thermocouples are used. Wherever thermocouples or pitot static pressure taps are inserted into the pressurized rig special high temperature fittings are used to prevent parasitic leakage. These fittings are made by Conax Co.[1] and use a proprietary fitting design with magnesium-oxide (lava) type glands capable of 1800 °F operation.

Seal Preload and Measurement

An important parameter requiring investigation is the seal preload required to adequately seal the pressurized gas. Both lateral preload (e.g., transverse to the seal axis) and axial preload are measured in the rig. Lateral preload is applied using a series of welded-leaf, flexible Inconel 718 metal bellows (see fig. 5). These 0.5 in. diameter bellows are mounted on 1.0 in. centers and are pressurized from a common manifold. In-line with each of the bellows pressure supply tube is a hand valve (not shown) that can be used to select the number of active bellows.

A thin (0.02 in. thick) strip of Inconel is placed between the nose of the sealed bellows and the back of the candidate seal. This strip distributes the preload to portions of the seal between the bellows. An average seal contact pressure is determined by pro-rating bellows pressure (as measured in the

---

[1] Note mention of manufacturers is made only for reference purposes and does not constitute a product endorsement by NASA or the U.S. Government.

manifold supply) by the ratio of the bellows area to the backside seal area. If all of the bellows are active the average contact pressure is two-fifths the bellows supply pressure.

Axial preload is applied using specially designed actuators located at both ends of the rig that are on center with the seal axis. A key component of this system, is the large-stroke, hermetically-sealed axial preloader shown in figure 6(a) and (b). This bellow/piston arrangement was designed to several key design criteria, including: (1) Allow axial motion up to 0.35 in. per side to accommodate differential expansion between the ceramic seal and the metal rig; (2) Prevent any axial leakage out of the rig; and (3) Transmit compressive or tensile preloads up to 100 lb without significant frictional losses or hysteresis.

As shown in the cross section, the piston push rod end is welded to the inside closed end of the bellows. The outer diameter of the Inconel 718 bellows is welded to the Inconel outer tube. The Inconel outer tube then is mated to the rig using the Conax type fitting. The Inconel push rod is piloted in a hole on center line of the seal and lubricated with a light coating of high temperature boron nitride solid lubricant to minimize frictional drag.

The seal is preloaded from both ends instead of just one to minimize the effects of friction between the seal and the seal channel. In other words, force applied to the end of the seal is continuously reacted by friction forces as one moves axially down the seal. Using two actuators in essence cuts in-half the total accumulated friction that each actuator must overcome.

A 100 lb pneumatic piston exerts the axial load on the preload system through a calibrated load cell mounted in the load train. Engine pressure exerted internally on the bellows results in a force that must be subtracted out when recording the axial load applied to the end of the seal. All of the measurements made on the test rig are displayed on a computer screen and electronically stored on computer disks for future interpretation.

End Leakage Control

Unlike circular seals, linear seals unavoidably have two ends. Treatment of the ends is critical to obtaining accurate measurement of the seal's leakage performance. Based on experience with previous rig designs, end leakage can virtually be eliminated by "building-in" the ends of the seal into the test rig. As shown in figure 1, 1 in. of seal on both ends extends beyond the 3 ft test zone. In these built-in ends, there is no inter-panel gap (0.20 in.) that the seal must seal. The face of the rig and the seal are both flush with the cover plate. The seal is firmly preloaded against the cover plate with the lateral bellows preload system that are also in these end regions. The leakage follows the path of least resistance which is the center 3 ft test zone. If there is any trace leakage from the end cavities, its effects are minimized by testing the long 3 ft test lengths and calculating an average leakage rate in terms of leakage rate per unit seal length.

Adjacent Wall Condition

A simple method of prescribing various wall conditions is used in the rig. A front wall or cover plate is made with two precision machined surfaces.

One side is finished flat overall. Bolting this side toward the seal results in an interpanel gap width of 0.20 in. over the full 3 ft length, (accounting for the thin ≈0.016 in. high temperature head gasket). The opposite side has a sinusoidal wave machined onto it. The wave bulges inward toward the seal with a peak of 0.150 in. at the center (see fig. 1). When bolted against the seal, the interpanel gap width is 0.05 in. at the center sinusoidally increasing to the full 0.20 in. at both ends. The flow area for the straight gap condition is 7.2 in.^{2}. The flow area for the wavy wall condition is 4.5 in.^{2}.

DESIGN FOR HIGH TEMPERATURE SERVICE

Designing test fixtures for elevated temperature operation requires attention to be paid to certain design elements not often required for conventional design. For instance the rig must be properly sized to meet safety criteria of high temperature pressure vessels. Also allowances must be made for the significant growths that will occur as the fixture heats to the operating temperatures. Provisions must also be made to disassemble any threaded fasteners following high temperature service.

Stress Analysis

In sizing the test fixture, a finite element stress analysis of the test rig was performed. The loads used in the finite element model included a 140 psi seal preload pressure bearing against the front wall, and a 100 psi simulated engine pressure applied to the "wetted" surfaces upstream of the test seal. These represent the maximum engine pressure and seal preload envisioned for the test sequence. The stress fringes shown in figure 7 were calculated using the MARC finite element code. The maximum Von Mises stress found was 1200 psi at the fixed end of the front wall which was caused by bending of the front wall.

The stress found above was compared to the allowable strength as recommended by the ASME Boiler and Pressure Code. In references 2 and 3, the design stress is the lesser of one-third the tensile strength at operating temperature (ref. 4), or two-thirds the yield strength at operating temperature (ref. 4). The first criterion is the more conservative of the two resulting in an allowable design stress of 20 ksi (e.g., one-third of 60 ksi tensile strength) for Inconel X-750 at 1500 °F. This allowable stress is significantly greater than the maximum stress calculated for the test fixture. Hence it was concluded that the rig was properly sized. Comparing the design stress to the Von Mises stress, a factor of safety of 17 is found.

In addition to having high yield and ultimate strengths at temperature, Inconel X-750 has a very high creep rupture strength. At 1500 °F, its 1000 hr creep rupture strength of 20 ksi (ref. 4) ranks with the best of the high temperature metals. By comparison this creep rupture strength is almost four times that of Inconel 600 and 5 times that of 304 series stainless steel. These features in addition to its excellent oxidation resistance make Inconel X-750 an excellent material for the high temperature fixture.

Thermal Expansion Considerations

Heater joint in rig. - In the original design, three in-line air heaters used to heat incoming air were to be screwed directly into the bottom of the test fixture. The standard material for these heaters is 304 series stainless steel that has a higher coefficient of thermal expansion (CTE) than Inconel X-750. At 1500 °F the CTE's of 304 series stainless steel and Inconel X-750 are 11× and 9×10^{-6} in/in °F, respectively (ref. 4). Though this difference is relatively small, a temperature rise of just over 1400 °F causes significant stresses. As shown exaggerated in figure 8 at the location where the stainless steel pipe leaves the rig base, the pipe is unsupported and significant bending stresses develop.

A thermal stress analysis was conducted for the joint between the pipe and the rig. In the analysis the stainless steel pipe and the Inconel rig were allowed to expand at their own rates, resulting in the stresses shown in figure 9. The finite element analysis conducted used axi-symmetric elements, hence only the left cross section of the pipe and rig joint are shown. The 22 ksi Von Mises stress found in the corner where the pipe leaves the rig was more than twice the stainless steel's ultimate tensile strength at 1500 °F. Since the heater pipe is unsupported by the rig in this area and the stress is predominately tensile, this area was deemed most likely to have lead to failure. The neighboring 51 ksi stress in the Inconel X-750 rig is only slightly less than the 60 ksi ultimate tensile strength for this material at 1500 °F. Also indicated in the figure are the locations of the largest compressive and tensile axial, hoop and radial stresses.

A solution to allow use of the purchased components was to substitute an Inconel 600 pipe nipple in place of the heaters as is shown in figure 10. A 304 stainless steel pipe coupling was used to connect the stainless steel heater to the pipe nipple. The CTE of the Inconel pipe nipple was the same as the rig so no thermal mismatch exists there. Although there still is a CTE mismatch between the Inconel nipple and the stainless steel coupling, it is not a problem since the coupling is free to grow unimpeded. A special high temperature pipe thread sealant is used (XPAND-SET pipe compound) throughout the system that actually expands slightly when cured to fill any possible openings that may form between the pipe coupling and the pipe nipple.

Large scale thermal growth. - Similar to the seal lengths required in the engine, the test fixture was built to test seals 3 ft long. Calculations predicted that the 40 in. Inconel fixture heated to 1500 °F would grow over 0.5 in. This is the growth measured when the rig reaches operating temperature. To accommodate thermal growth of this magnitude special features were incorporated into the rig:

Rig tie-down: Ignoring thermal growth will normally results in unforgiving hardware failures because the thermal strain energy will be released in one way or another. To allow the rig to grow unimpeded, slotted feet were used on both ends of the rig. Light tension on the bolts used to secure the rig to the table allowed the rig to expand and contract without binding during a temperature cycle.

Piping manifold: A flexible piping manifold system was implemented in the rig as is shown below the bench in figure 4. The manifold allows the heaters to move axially with the rig growth mentioned above without placing bending loads and unnecessary stresses on the hot heater pipes. Similarly oversize clearance holes were made in the bench top to allow heater movement. The manifold also allows the pipes to grow along their axes.

Axial preload system: The systems on both sides of the rig used to preload the seals along their axes are also allowed to float with the rig. As shown in figure 4, the right-side preloader including the load cell and pneumatic actuator are bracketed to the base of the rig. Mounting them this way ensures that the axial load measured in the load cell will not be clouded by load developed by the significant thermal loads that would be produced if the system were mounted to the bench.

Threaded fasteners. - Threaded fasteners hold the front wall onto the rig and hold the seal retainer (e.g., the "L"-shaped piece above the seal in figure 1) in place. After running the rig hot several times, the seal retainer had to be removed for adjustment. Nearly a third of the cap screws holding the retainer in place had seized, requiring them to be drilled out. Close inspection of the surfaces beneath the heads of the A286 cap screws indicated that the heads were seizing against the Inconel seal retainer. This seizing can be caused by several factors including mutual oxidation growth and diffusion bonding between the two mating surfaces.

To overcome similar difficulties in the future, a sequence of tests were conducted with available antiseize compounds and other proven fastener treatment methods to determine an acceptable method of preventing excessive breakaway torques after high temperature operation. In these tests, a series of A286 cap screws (3/8-24 UNF) with various treatments specified in table I were screwed into an Inconel X-750 disc (representing the seal retainer material). Prior to assembly, the test disc was drilled and tapped and the threads were preoxidized in a furnace for 3 hr at 1500 °F. The resulting color of the test disc was the common greenish-grey Inconel oxidation color. Based on experience at NASA Lewis and within the engine community, preoxidizing Inconel components generally reduces the likelihood of seizing threaded components together.

A majority of the cap screws were also preoxidized for 3.5 hr at 1400 °F. The resulting color was a velvety charcoal grey. (Note: Use of the A286 cap screws above 1200 °F is recommended for only short exposures for rated performance. The cap screws are used in the test rig with a derated maximum preload.) In many of the tests conducted, an Inconel X-750 washer was placed beneath the head of the cap screw. The Inconel washers were oxidized in the same manner as the Inconel disk. Washers introduce a second load bearing interface in the load stack that should statistically improve the chances of breaking the connection after heating.

The cap screws were tightened to an assembly torque of 360 in.-lb. To simulate a worst-case temperature exposure, the disk and cap-screw test piece was placed in a furnace at 1500 °F for 17 hr. After the disk was allowed to cool to room temperature, the torques required to break the connection were measured using a calibrated dial-type torque wrench. The results of these tests are presented as a bar-chart in figure 11 for easy comparison. The data represent one screw of each treatment, except for treatment number 9 where two screws were used and the average torque is reported.

The break-away torque measured for the cap screw coated with the nickel "antiseize" (specimen 3) was the highest found for all of the tests. Breakaway torques for the nickel antiseize and the copper antiseize (specimens 4 and 5) combined with a washer were lower, but were still one-third and one-fourth more respectively, than the assembly torque of 360 in./lb.

In some cases, the break-away torques were slightly lower than the assembly torque. As experienced in high temperature bolted-flange connections, this is in part due to relaxation of the asperity contacts of mating threads with temperature.

Preoxidizing the cap screw, coating it with silver-antiseize and a light coating of boron nitride and using a preoxidized washer proved to be the most effective approach for assembly and disassembly after heating. This is the thread treatment used for the cap screws and for the studs and nuts for the front wall. (Note: Boron nitride forms boric oxide at elevated temperatures that can weaken some metals over long exposure times. Hence, this thread treatment may not be the best for applications where the high temperature service time is significantly longer than the short run times here.)

Though some breakaway torques for the treatment in which the screw was preoxidized or preoxidized and coated with boron nitride powder had lower disassembly torques, these treatments did not allow easy assembly. In one case, for instance, the cap screws actually seized on assembly presumably because no grease was present. The grease in the silver antiseize facilitates assembly and the lubricous silver additive and the boron nitride powder maintains low break-away torque after the heating cycle.

TEST FIXTURE DEMONSTRATION

The design features incorporated in the test fixture allows a broad range of candidate engine seal concepts to be tested. The test rig is easily configured to test the ceramic wafer seal, the braided ceramic rope seal, or the ceramic ball/ceramic sleeve thermal barrier seal described in ref. 1, amongst others. The rig can accommodate each of these seals' dimensions and tolerances as well as axial and lateral preloads.

Seal Specimen

For purposes of demonstrating the high temperature capability of the test rig, the ceramic wafer seal depicted in figure 12 was installed and tested. The ceramic wafer seal consists of a stack of ceramic wafers mounted in the seal channel and preloaded against the adjacent wall using the lateral bellows preload system described. The ceramic wafers used in these tests are made of high density aluminum oxide (Al_2O_3) ceramic. The wafers are 0.500±0.001 in. square and are 0.125±0.001 in. thick. The wafer faces are smooth (<20 in. RMS) and parallel to within 0.001 in. so that leakage between adjacent wafers would be minimized. The wafer corners are rounded with a 0.09 in. corner radius to prevent the wafers from digging into the engine panel and to minimize wafer corner stresses.

Test Results

Leakage rates for the ceramic wafer seal sealing 1350 °F air are shown versus pressure drop in figure 13. In this test the seal sealed against a simulated engine wall distortion in which the adjacent wall bulged in toward the seal. The gap was 0.05 in. in the center varying sinusoidally to 0.20 in. at both ends. The peak-to-peak wall distortion was 0.15 in. in only an 18 in. span.

Prior to heating, the wafers were first preset to the preferred sealing position (e.g., in contact with the front wall and in contact with the top of the seal channel) using the lateral preload (≈50 psi seal contact pressure) and the engine pressure. The wafers were axially compressed with 10 lb. (or 40 psi contact pressure for the 0.5 in. square seal) using both left and right axial preloaders.

As shown in figure 13 the seal performed well. The seal's leakage rate was below the tentative leakage limit (limit = 0.012 lb/sec = 0.004 lb/ft/sec × 3 ft of seal tested; shown as horizontal dashed line) for the full pressure range tested. (Note: The tentative leakage limit cited is a goal leakage limit arrived at by the hypersonic engine community for seal concept screening purposes, ref. 1.) Furthermore, the seal leakage for these test conditions was repeatable. Shown in the figure are two complete increasing-decreasing pressure cycles that lie on the smooth curve.

SUMMARY AND CONCLUSIONS

A high temperature test fixture for evaluating the performance of advanced hypersonic engine seals has been installed and successfully checked-out at NASA Lewis. The rig tests candidate seals 3 ft long as typically required for hypersonic engine panels. The test fixture can subject seals to temperatures up to 1500 °F and pressures differentials up to 100 psi. Furthermore, seal performance in sealing either straight or engine simulated distorted sidewalls can be measured. Sidewall distortions as large as 0.150 in. in only 18 in. of span can be tested in the rig. The sensitivity of leakage performance to lateral or axial loading can also be measured using specially designed high temperature bellows preload systems.

Designing the test fixture for high temperature operation required attention to be paid to several important design criteria not often required for conventional design. Materials selected for the rig have high tensile and creep strengths at temperature. The primary material used for the rig was Inconel X-750. Another issue confronted was avoidance of potentially high thermal stresses that can occur using materials with different coefficients of thermal expansion (CTE). An example of the potentially dangerous thermal stresses that can result was demonstrated herein for a contemplated heater-to-joint. Finite element analyses performed at a critical joint between the relatively high CTE stainless steel air heater pipe and the relatively low CTE Inconel rig uncovered high thermal stresses which led to an improved joint approach.

The 0.5 in. axial expansion of the 3 ft long rig at 1500 °F influenced several design features of the test fixture. The rig and the axial preload systems were allowed to float. And, the piping manifold system was designed to be flexible to allow the heaters to accommodate rig growth. In both of these cases freedom of movement prevents development of excessive thermal stresses.

The high temperature threaded fasteners used in the test fixture need some form of treatment to prevent seizure and excessively high breakaway torques. Furnace tests at 1500 °F with multiple available thread treatments demonstrated that the best treatment was preoxidizing all of the components including the washer, and coating the threads with silver antiseize and a light coating of boron nitride powder. This method applied to the test fixture has been successful in preventing fastener seizure in subsequent high temperature runs.

The test fixture's performance was demonstrated using a unique flexible high temperature ceramic wafer seal. The seal's leakage performance was measured at 1350 °F, at pressure differentials ranging from 10 to 100 psi sealing against an engine simulated distorted wall condition. The seal performed well with a leakage rate significantly below the tentative leakage criterion, for the heating and loading sequence used. On the basis of these findings, the following results were obtained:

1. A unique high temperature seal test fixture meeting all of the specified design criteria has been successfully demonstrated.

2. Stresses within the seal test fixture are less than one-tenth the allowable design stresses recommended by the ASME boiler code.

3. Thermal stresses predicted for a contemplated joint between a stainless steel air-heater pipe and the Inconel X-750 rig exceeded the stainless steel tensile strength at 1500 °F. The implemented approach of using a stainless steel pipe coupling to join the heater to an Inconel 600 pipe nipple extending from the test rig overcomes the excessive stress problem.

REFERENCES

1. Steinetz, B.M.; DellaCorte, C.; and Sirocky, P.J.: On the Development of Hypersonic Engine Seals, NASA TP-2854, 1988.

2. Boiler and Pressure Vessel Code, Section VIII, Division 1. American Society of Mechanical Engineers, 1980.

3. Boiler and Pressure Vessel Code, Section VIII, Division 2. American Society of Mechanical Engineers, 1980.

4. Kattus, J.R.: Nonferrous Alloys; Inconel X-750. Aerospace Structural Metals Handbook, Metals and Ceramics Information Center, Battelle Labs, Columbus, Ohio, 1990, Vol. 4, Article 4105.

TABLE I. - DETAILED LISTING OF THE A286 FASTENER TREATMENTS PRIOR TO ASSEMBLY AND HIGH TEMPERATURE EXPOSURE

Treatment number	Tread treatment	Washer
1	As received cap screw. No oxidation. Control sample.	No
2	Preoxidized cap screw.	No
3	Preoxidized cap screw. Nickel antiseize[a]	No
4	Preoxidized cap screw. Nickel antiseize[a]	Yes
5	Preoxidized cap screw. Copper antiseize[b]	Yes
6	Preoxidized cap screw. Boron Nitride powder[c]	Yes
7	Preoxidized cap screw. Nickel antiseize[a] and Boron Nitride[c] powder.	Yes
8	Preoxidized cap screw. Silver antiseize.[d]	Yes
9	Preoxidized cap screw. Silver antiseize[d] and Boron Nitride[c] powder.	Yes
10	Nonoxidized cap screw with 1 µm layer sputtered silver solid lubricant.	Yes
11	Nonoxidized cap screw with 1 µm layer sputtered silver solid lubricant. Silver antiseize.[d]	Yes

Assembly compounds:

[a] Nickel antiseize, nickel and aluminum powder mixed with grease. Rated temperature: 2400 °F. Available as Never-Seize from Bostik Co., Cat No. NSBT8-N, Middleton, MA.

[b] Copper antiseize, copper powder mixed with grease. Rated temperature: 1800 °F. Available as Felpro C5A antiseize lubricant from Fel-Pro, Part No. 51007, Skokie, IL.

[c] Boron Nitride powder. Rated temperature: >2000 °F. Available from Standard Oil Engineered Materials, Part No. SHP-325, Niagara Falls, NY.

[d] Silver antiseize. Silver powder mixed with grease. Rated temperature: 1500 °F. Available as Silver Goop from Crawford Fitting Co. Solon, OH, 44139.

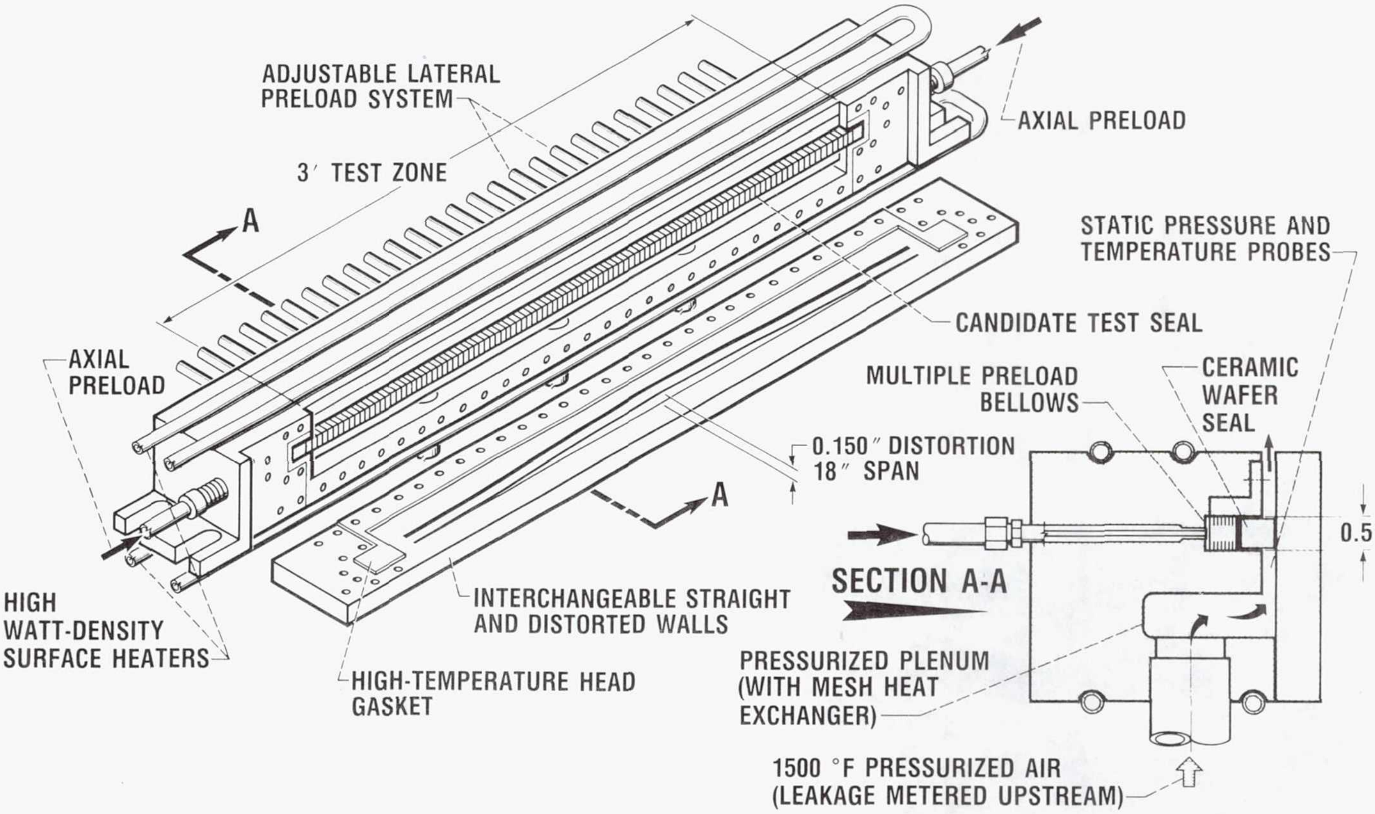

Figure 1.—Isometric of high temperature engine seal test fixture.

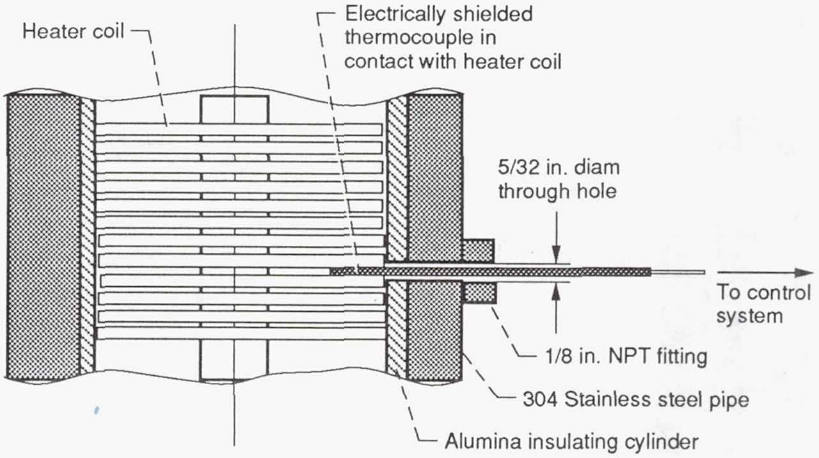

Figure 2.—Air heater over-temperature sensing technique, enlarged for clarity.

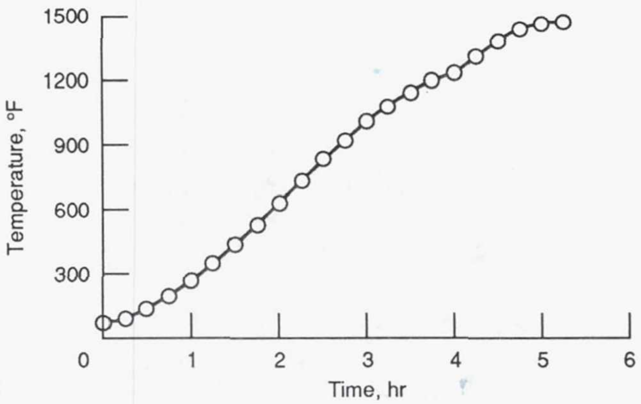

Figure 3.—Temperature-time rig heating profile using both surface-mount and in-line air heaters.

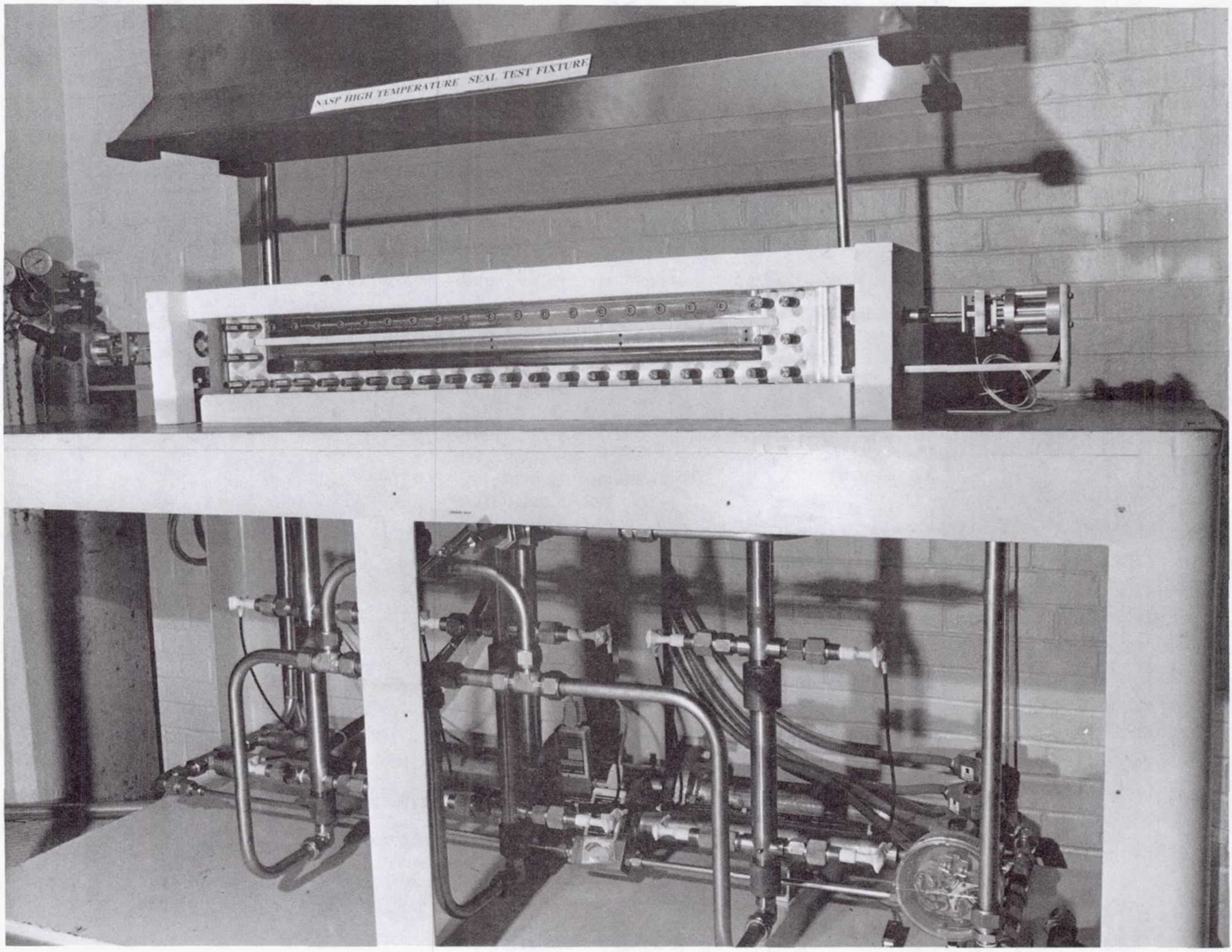

Figure 4.—Photo of high temperature seal test rig, front wall removed for clarity.

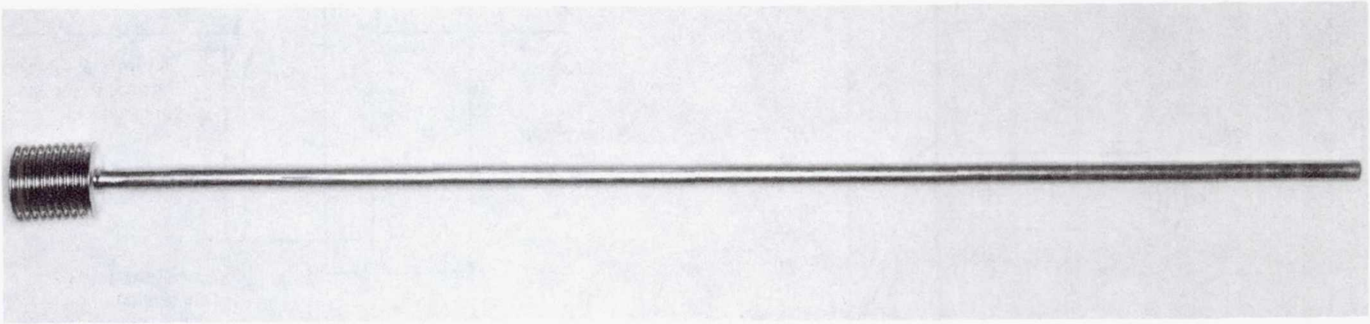

Figure 5.—Photo of Inconel welded-leaf lateral-preload bellows.

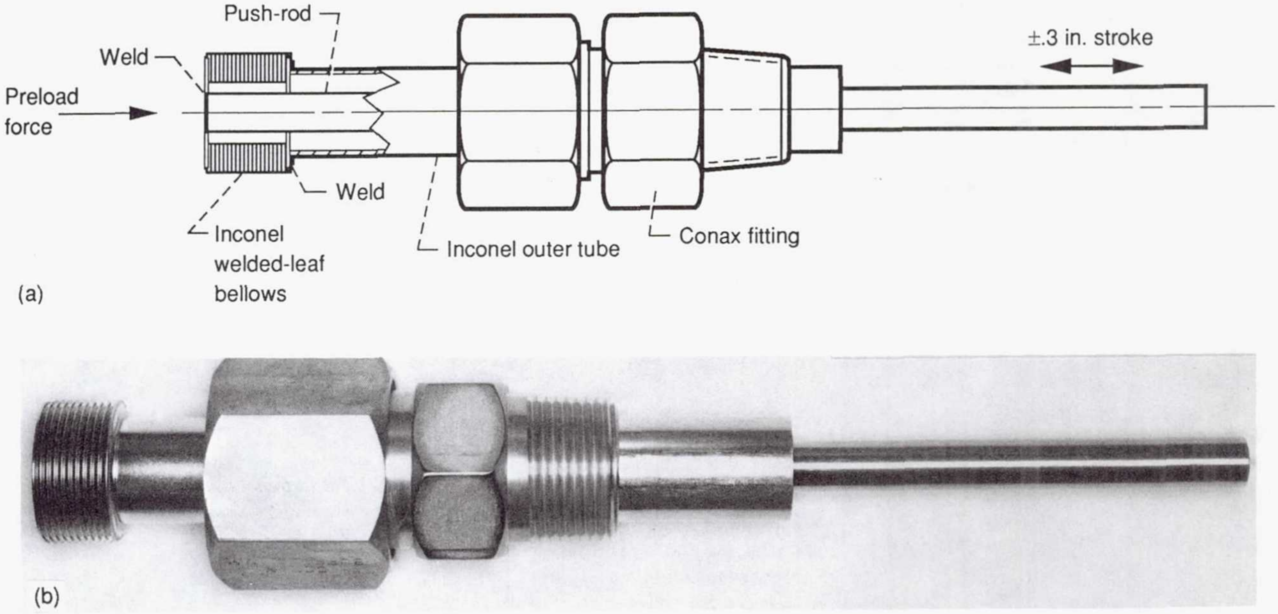

Figure 6.—Schematic (a) and photo (b) of high-temperature, hermetically sealed axial preloader.

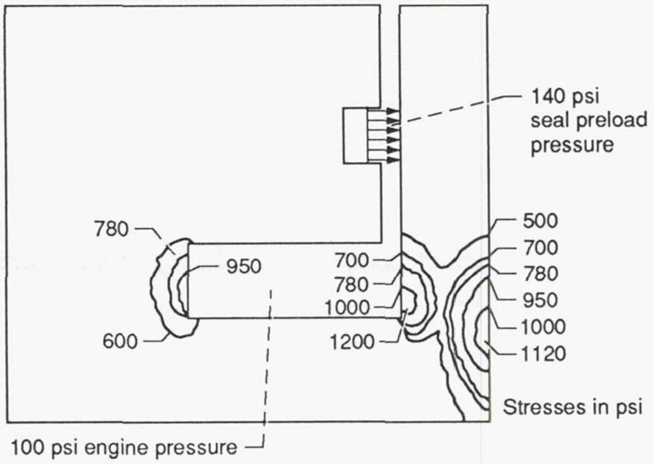

Figure 7.—Seal fixture Von Mises equivalent stress contours under maximum loading conditions.

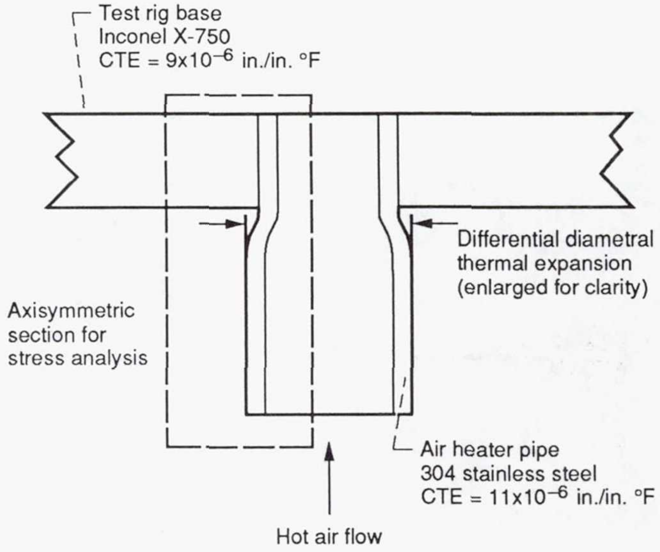

Figure 8.—Schematic of joint between heater-pipe and rig-base showing potential effects of mismatch in thermal expansion coefficients at temperature.

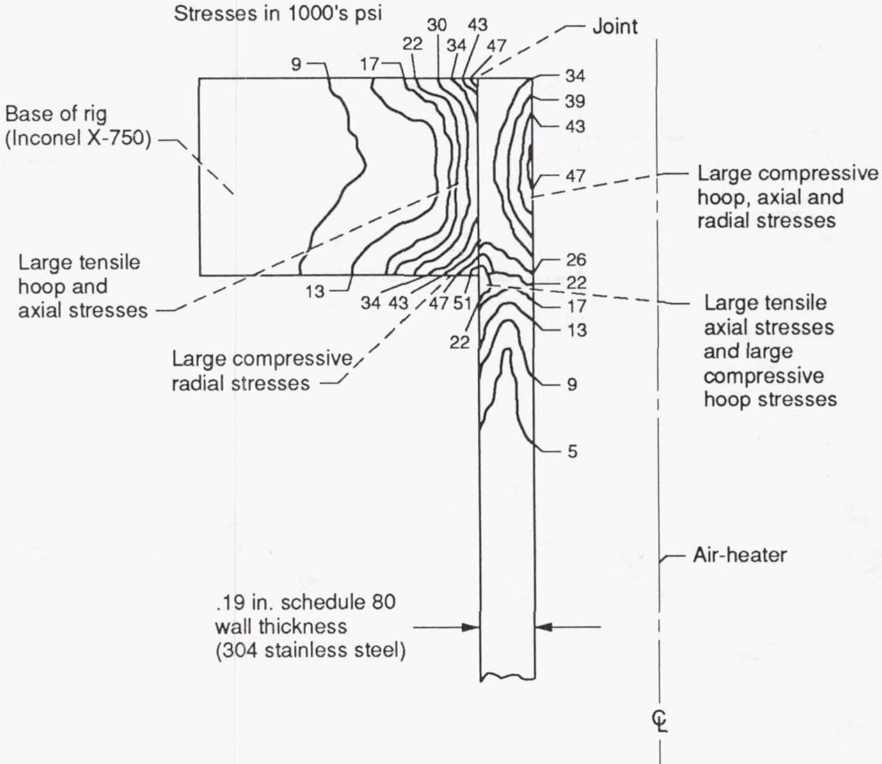

Figure 9.—Heater-pipe and rig-base Von Mises equivalent stress contours caused by mismatch in heater and rig thermal expansion coefficients at 1500 °F.

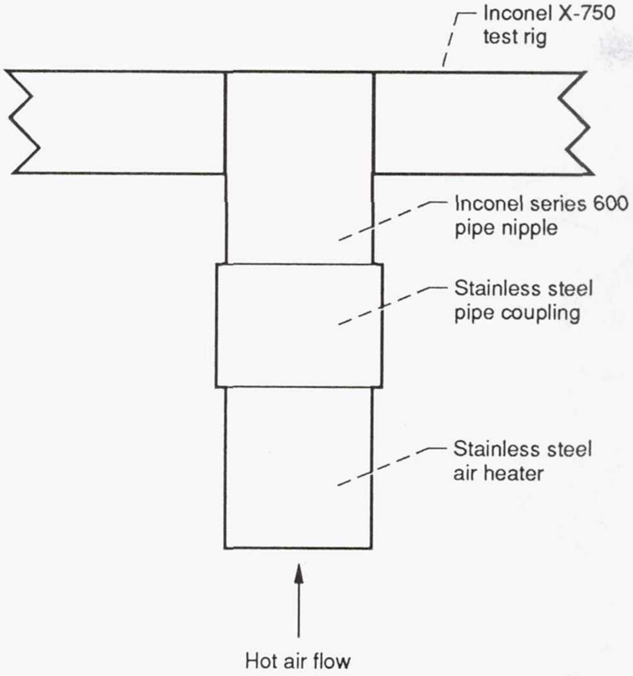

Figure 10.—Implemented heater attachment approach to avoid thermal stress problem caused by mismatch in thermal expansion coefficients.

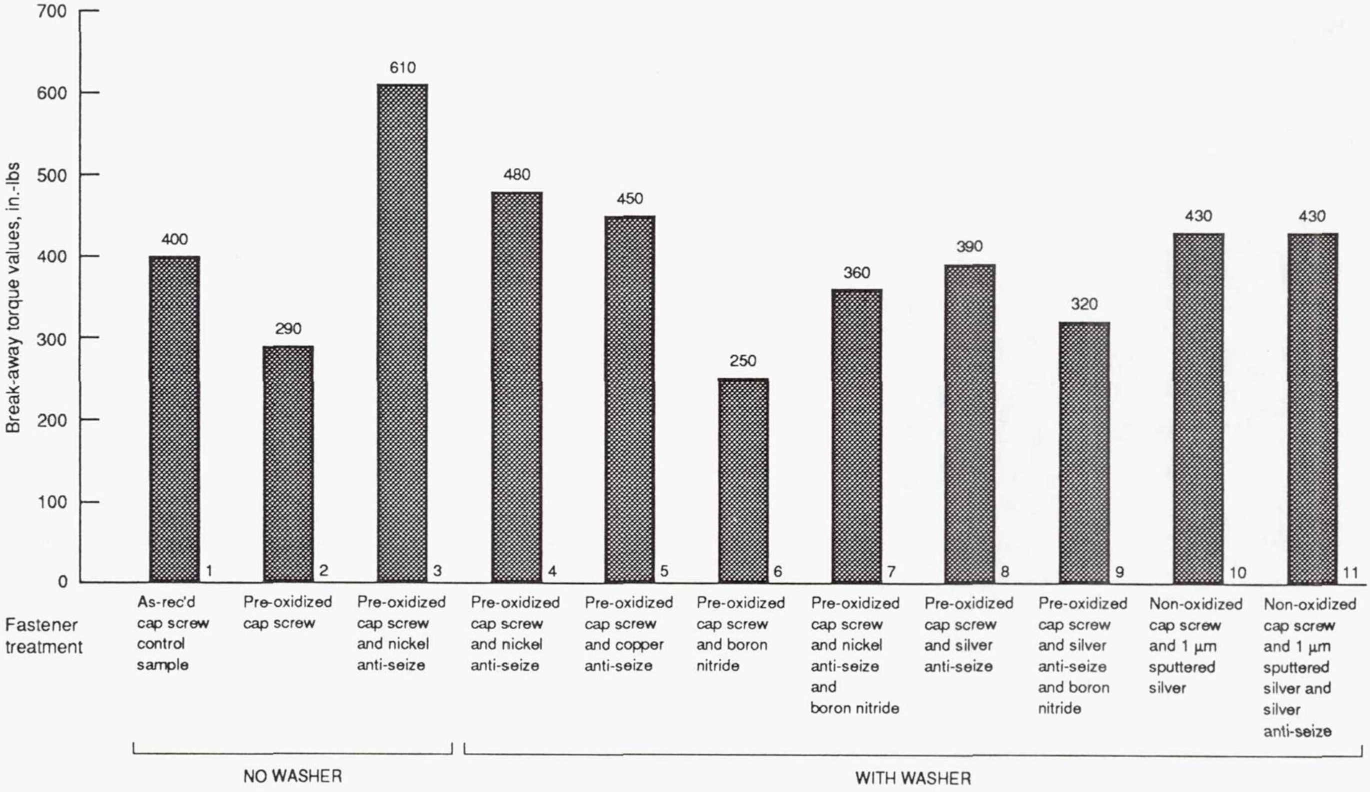

Figure 11.—Cap screw break-away torque values for various fastener treatments after high temperature exposure.

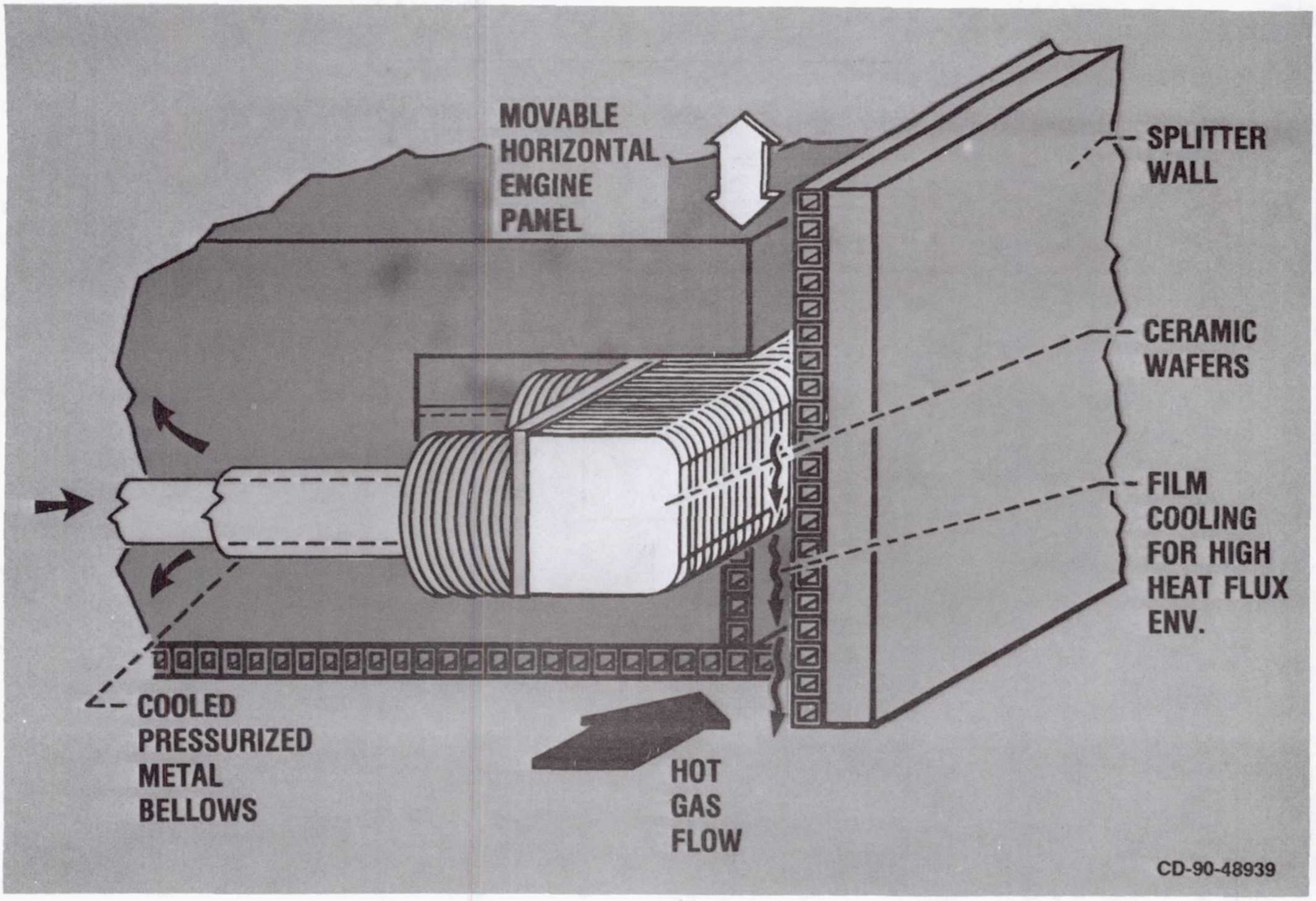

Figure 12.—Isometric of ceramic wafer seal.

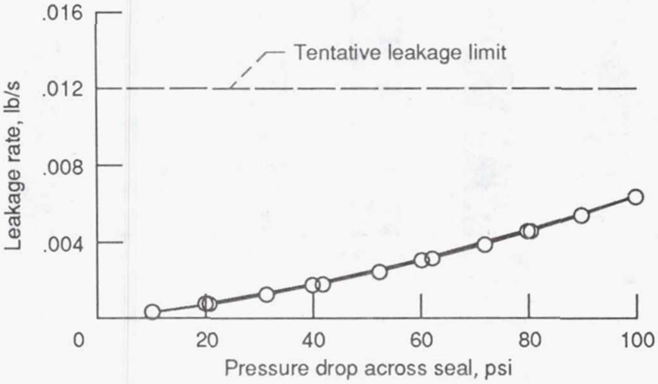

Figure 13.—Ceramic wafer seal leakage rate versus pressure drop for 1350 °F air, sealing against engine simulated distorted wall condition.

NASA
National Aeronautics and
Space Administration

Report Documentation Page

1. Report No. NASA TM-103658	2. Government Accession No.	3. Recipient's Catalog No.
4. Title and Subtitle A Test Fixture for Measuring High-Temperature Hypersonic-Engine Seal Performance		5. Report Date December 1990
		6. Performing Organization Code
7. Author(s) Bruce M. Steinetz		8. Performing Organization Report No. E-5780
		10. Work Unit No. 505-63-1B
9. Performing Organization Name and Address National Aeronautics and Space Administration Lewis Research Center Cleveland, Ohio 44135-3191		11. Contract or Grant No.
		13. Type of Report and Period Covered Technical Memorandum
12. Sponsoring Agency Name and Address National Aeronautics and Space Administration Washington, D.C. 20546-0001		14. Sponsoring Agency Code

15. Supplementary Notes

16. *Abstract*

A test fixture for measuring the performance of several high-temperature engine seal concepts has been installed at NASA Lewis Research Center. The test fixture has been developed to evaluate seal concepts under development for advanced hypersonic engines, such as those being considered for the National Aerospace Plane. The fixture can measure static seal leakage performance from room temperature up to 1500 °F and air pressure differentials up to 100 psi. Performance of the seals can be measured while sealing against flat or engine-simulated distorted walls, where distortions can be as large as 0.150 in. in only an 18 in. span. The fixture is designed to evaluate seals 3 ft long, a typical engine panel length. The seal channel can be configured to test square, circular, or rectangular seals that are nominally 0.5 in. high. The sensitivity of leakage performance to lateral or axial loading can also be measured using specially designed high temperature lateral and axial bellows preload systems. Leakage data for a candidate ceramic wafer engine seal is provided by way of example to demonstrate the test fixture's capabilities.

17. Key Words (Suggested by Author(s)) Seal High temperature Test rig Design		18. Distribution Statement Unclassified – Unlimited Subject Category 00	
19. Security Classif. (of this report) Unclassified	20. Security Classif. (of this page) Unclassified	21. No. of pages 20	22. Price* A03

NASA FORM 1626 OCT 86

*For sale by the National Technical Information Service, Springfield, Virginia 22161