NASW-4435

DESIGN OF INTERNAL SUPPORT STRUCTURES FOR AN INFLATABLE LUNAR HABITAT

IN-54-CR
73923
P. 135

Submitted to:

James A. Aliberti

NATIONAL AERONAUTICS AND SPACE ADMINISTRATION

Prepared by:

Elizabeth A. Cameron, Team Leader
John A. Duston
David D. Lee

Mechanical Engineering Design Projects Program
THE UNIVERSITY OF TEXAS AT AUSTIN
Austin, Texas

Fall 1990

(NASA-CR-189996) DESIGN OF INTERNAL SUPPORT STRUCTURES FOR AN INFLATABLE LUNAR HABITAT (Texas Univ.) 135 p CSCL 06K

N92-21209

Unclas
G3/54 0073923

DESIGN OF INTERNAL SUPPORT STRUCTURES FOR AN INFLATABLE LUNAR HABITAT

Submitted to:

James A. Aliberti
Manager of Research Programs

Sponsored by:

NATIONAL AERONAUTICS AND SPACE ADMINISTRATION

Prepared by:

Elizabeth A. Cameron, Team Leader
John A. Duston
David D. Lee

Mechanical Engineering Design Projects Program
THE UNIVERSITY OF TEXAS AT AUSTIN
Austin, Texas

Fall 1990

ACKNOWLEDGEMENTS

The design team would like to express sincere appreciation to our faculty advisor, Dr. Kris Wood, for his encouragement throughout the semester. We would also like to thank Dr. Paul Nowak at Colorado State University for providing technical advice about structures. Thanks also goes to Mr. Hank Kleespies for motivation and technical guidance offered during the semester. For all his help in locating supplies and gathering information, we thank Mr. Bert Herigstad. We would also like to thank Mr. Wendell Deen for helping us improve our graphical communications. Finally, the team offers thanks to Dr. Steven P. Nichols for overseeing the ME 466K Design Projects Program and providing valuable information about engineering careers.

ABSTRACT

DESIGN OF INTERNAL SUPPORT STRUCTURES FOR AN INFLATABLE LUNAR HABITAT

NASA has a long range goal of constructing a fully equipped, manned lunar outpost on the near side of the moon by the year 2015 [1]. The proposed outpost includes an inflatable lunar habitat to support crews during missions longer than 12 months. This report presents a design for the internal support structures of the inflatable habitat. The design solution includes material selection, substructure design, assembly plan development , and concept scale model construction.

The report discusses alternate designs and design solutions for each component of the design. Alternate materials include aluminum, titanium, and reinforced polymers. Vertical support alternates include column systems, truss systems, suspension systems, and lunar lander supports. Horizontal alternates include beams, trusses, floor/truss systems, and expandable trusses. Feasibility studies on each alternate showed that truss systems and expandable trusses were the most feasible candidates for conceptual design. The team based the designs on the properties of 7075 T73 aluminum. The substructure assembly plan, minimizes assembly time and allows crews to construct the habitat without the use of EVA suits.

In addition to the design solutions, the report gives conclusions and recommendations for further study of the inflatable habitat design.

KEY WORDS: EXPANDABLE TRUSS, TRUSS SYSTEM, INFLATABLE HABITAT, INTERNAL SUPPORT STRUCTURE

Elizabeth A. Cameron

Elizabeth A. Cameron (Team Leader)

John A. Duston

John A. Duston

David D. Lee

David D. Lee

TABLE OF CONTENTS

TABLE OF CONTENTS (Continued)

TABLE OF CONTENTS (Continued)

TABLE OF CONTENTS (Continued)

LIST OF FIGURES

LIST OF FIGURES (Continued)

LIST OF TABLES

INTRODUCTION

The Universities Space Research Association (USRA) is a consortium of universities established by the National Academy of Sciences. In conjunction with the National Aeronautics and Space Administration (NASA), USRA sponsors university design projects nationwide. Through the Mechanical Engineering Design Projects Program at The University of Texas at Austin, NASA and USRA have suggested several design projects for the lunar missions. Projects for the Fall semester 1990 include designs of lunar mining equipment, a de-orbiting vehicle, and internal support structures for an inflatable habitat.

The objective of this project is to design internal support structures for the inflatable habitat. This report includes background information on the lunar mission, alternate designs for the internal support structure, a feasibility study, and design solutions for each component of the design. Also included are conclusions and recommendations for further study of the inflatable habitat.

1.1 Background Information

NASA has a long range goal of constructing a fully equipped, manned lunar outpost on the near side of the moon by the year 2015 [1]. The proposed outpost includes landing pads, an oxygen pilot plant, oxygen storage tanks, and the inflatable habitat. Figure 1 shows the proposed layout of the lunar outpost [6]. The lunar outpost mission is comprised of three phases: emplacement, consolidation, and utilization. The emplacement phase, to be completed by the year 2003, places a habitat with one year life support capabilities on the moon. Along with the initial habitat, the emplacement phase delivers

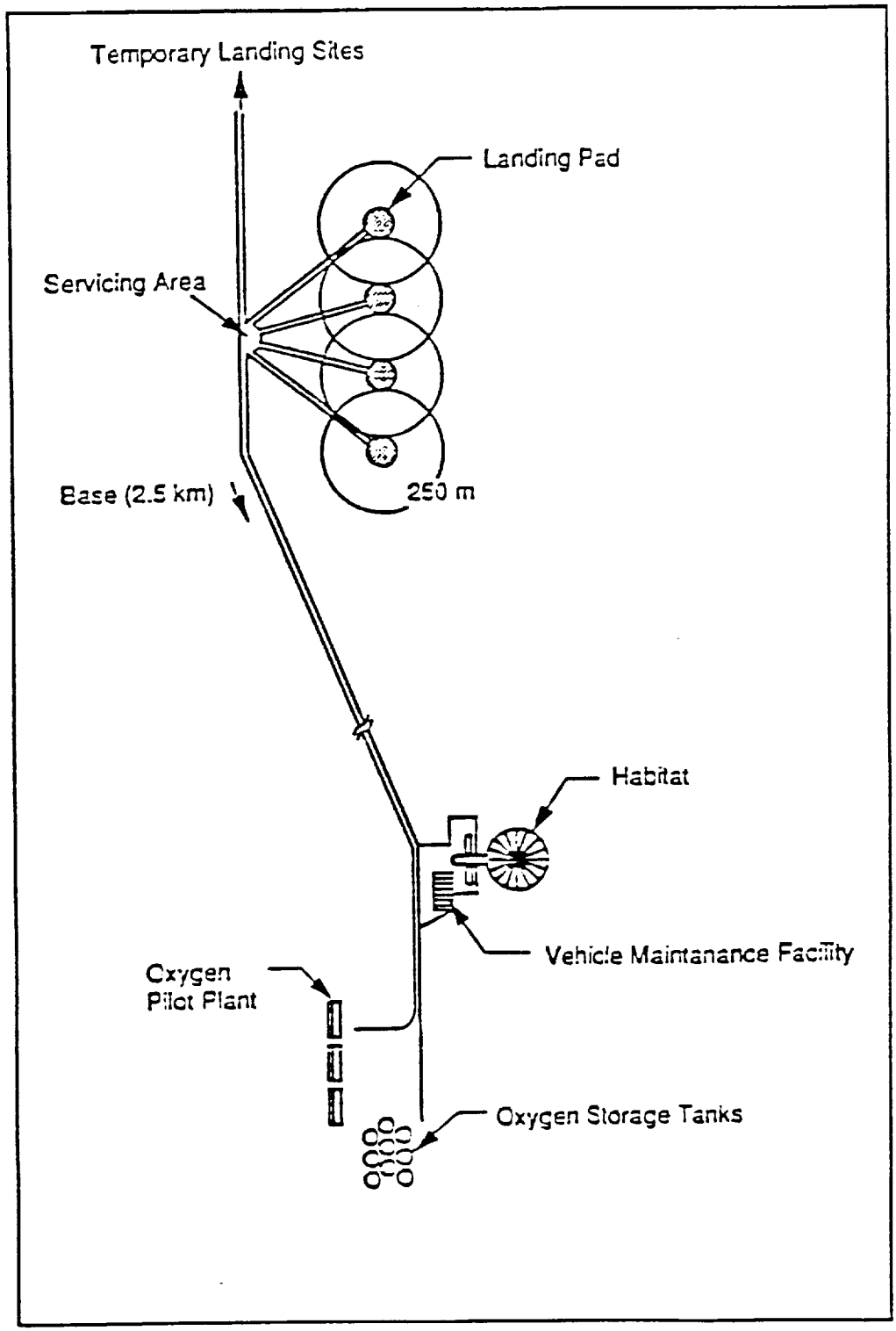

Figure 1. Proposed lunar outpost [6].

laboratories,airlocks,and any required support systems. An expanded habitat, constructed during the consolidation phase, is scheduled to be completed by the year 2010 [1]. The expanded habitat contains crew quarters, science laboratories, medical facilities, and other facilities necessary for long duration missions [5]. The final phase, utilization, is the phase in which crew members conduct experiments on the moon.

One of the primary design concerns during background research was the effect of the lunar environment on humans and structures. NASA has been studying the moon's environment for several years. During their studies, they found that radiation and extreme temperatures pose a serious threat to human life as well as potential damage to structural materials [4]. Tests on lunar soil, called regolith, showed that covering habitats with the soil provides adequate protection from radiation and thermal effects [2]. Prior to initiation of the emplacement phase, work crews will excavate the lunar surface to provide a site for the initial habitat. The excavation process can provide some of the regolith necessary to cover the habitat.

Construction of the expanded habitat will begin at the conclusion of the emplacement phase. The habitat houses larger crews for longer duration missions than the habitat of the emplacement phase. NASA considered several alternate structures for the habitat during their initial studies. Structures considered include Space Station Freedom-derived modules, heavy-lift launch vehicle diameter modules, prefabricated large diameter cylinders, and inflatables [1]. Inflatable structures consist of an outer shell, which acts as a pressure boundary, and internal structures, which provide support for floors and walls. Because of their low weight-to-volume ratio, inflatable structures are especially useful in space applications. In addition to being lightweight, inflatable structures offer the advantage of being deflatable. Existing vehicles, such as the space shuttle, can transport the compact deflated structures into space. Due to weight, space, and fuel considerations, an inflatable structure can be transported at a lower cost than a prefabricated structure. For

these reasons, NASA chose inflatable structures as the most feasible solution for conceptual design [5].

Figure 2 shows the habitat layout proposed in NASA's 90 Day Study [1]. To guard against radiation, the habitat lies partially underground. When inflated, the habitat shell supports the weight of the the protective regolith layer [3]. At least two airlocks connect to the spherical structure for access to and from the lunar surface. The underground position of the habitat enables crew members to enter through the airlocks, located on the central level [1].

1.2 Project Requirements

After studying the proposed lunar habitat and background information, the team identified several project requirements. The first project requirement was the development of substructure designs that satisfy the spatial and equipment layout concepts. Substructures include vertical supports, horizontal supports, and structural connections. During the design of the substructures, the team investigated several construction materials. The next requirement was development of an assembly plan for constructing the substructures. The assembly plan includes investigation of equipment to aid in habitat construction and investigation of assembly sequences. Finally, the team constructed a concept scale model of the substructures to demonstrate feasibility. Site preparation, airlock design, inflatable shell design, interior wall design, and foundation design were not included in the project requirements.

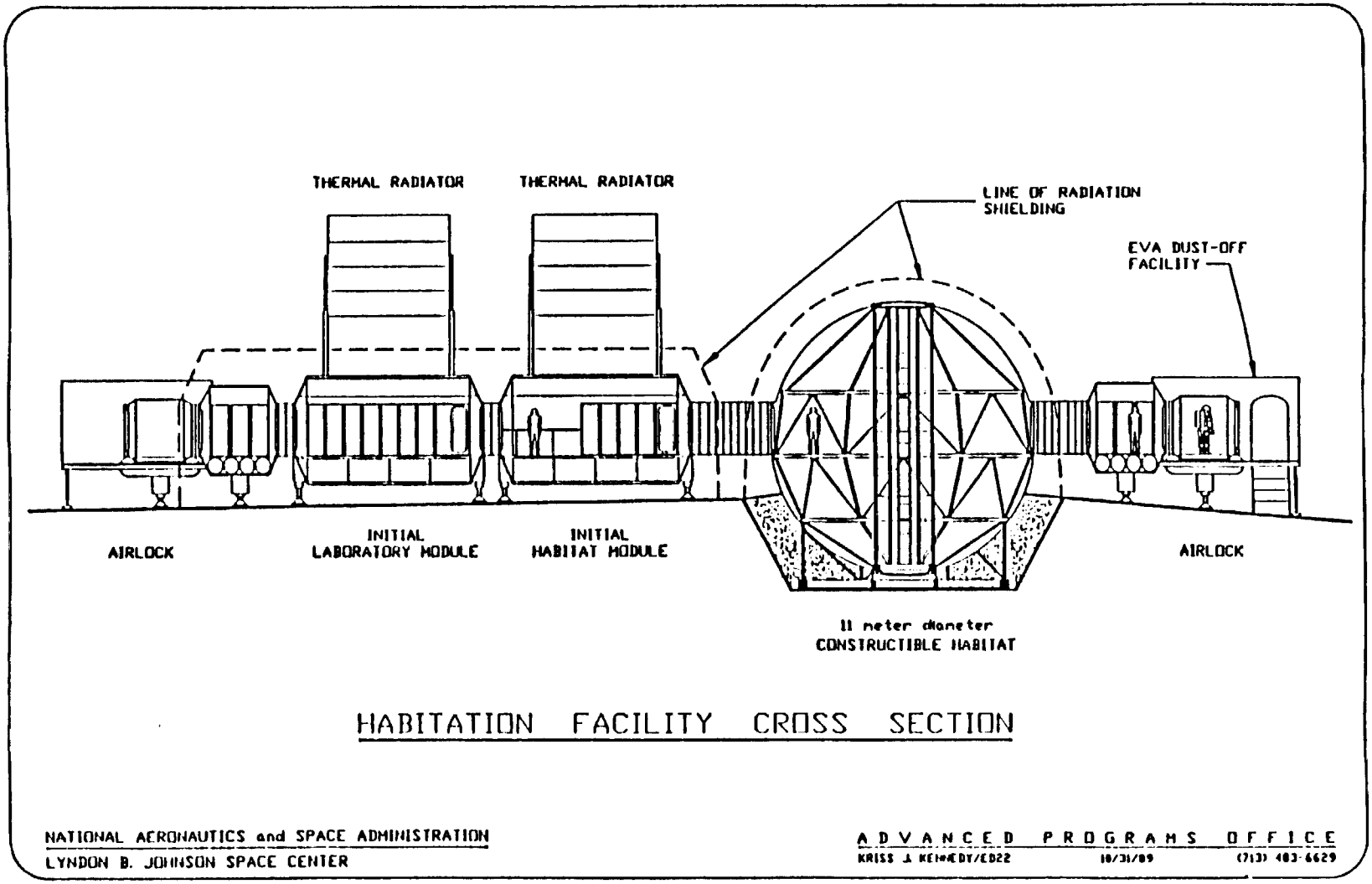

Figure 2. Proposed layout of the facilities [1].

1.3 Design Criteria

To satisfy the project requirements, the project team identified several design criteria for evaluating alternate designs:

1.3.1 Material Considerations

1. Material mass and volume must be minimized to reduce transportation costs.
2. Material packages must fit within the cargo areas of existing transporting vehicle.
3. The material must withstand structural loading without yielding in tension, compression, or shear.
4. Material not inside the protected habitat environment must withstand exposure to radiation and extreme temperature fluctuations.

1.3.2 Structural Considerations

1. The structure must be designed to provide a safety factor of four on load-bearing members [2].
2. The structure should be adaptable to various inflatable habitat geometries and sizes.
3. The support structures should accommodate all piping and ventilation systems (fire protection, waste, power, water, etc.). For example, the structure should provide adequate space and strength for the placement of ventilation ducts throughout the habitat.
4. The design must provide structural redundancy in case of collapse.
5. Each level of the structure must be able to support 20.83 lbf/ft^2 moon load for experimental areas and 8.33 lbf/ft^2 moon load for living areas [3].
6. The platforms must accommodate various living and equipment arrangements.
7. Assembly and disassembly time on the lunar surface must be minimized.

1.3.3 Maintenance Considerations

1. Repair time must be minimized and repair must be accomplished on the lunar surface.

The team chose to design the internal support structure system with emphasis on maximizing use of available space, minimizing structural weight, and minimizing structure assembly time.

1.4 Proposed Design Methodology

In order to fulfill the project requirements, the team selected a six step design methodology. The first step in the design process was problem definition. Problem definition includes identification of project requirements, design criteria, and scope and limitations. Upon completion of problem definition, a literature review began. Review of previous design reports and journals took place during the literature review. The next step of the design process involved the creation of alternate design solutions. The team created alternate design solutions, and then performed a feasibility study on each design solution. The design criteria, developed earlier, provided a basis for evaluation of the alternate designs. Employing a decision matrix, which includes the design criteria, allowed efficient comparison of the alternates while choosing the most feasible design. Creation of a detailed design solution followed the feasibility study. Finally, as a demonstration of feasibility, the team constructed a concept scale model of the completed internal support structure of the lunar habitat.

ALTERNATE DESIGNS

2.1 Introduction

After identifying the project requirements, the team divided the design project into three components. The components include support structures, assembly methods, and materials. Before beginning the alternate designs for each component, the team chose a diameter for the habitat. To satisfy spatial requirements, the minimum feasible sphere diameter for is 10 m [1]. To determine the maximum sphere diameter, the team used the shuttle cargo bay dimensions as a limiting factor. The cargo bay is 18.3 m (60 feet) long and 4.6 m (15 foot) in diameter [3]. Using a the diameter of a pre-assembled core as a maximum material package dimension, the team determined that 16 m is the maximum diameter sphere that can fit in the shuttle cargo bay. These dimensions allow a 2 m clearance between the sphere and the cargo bay wall. NASA engineers provided concept layouts and load requirements for a 16 m sphere [1]. With approximately 2.6 m between each level, the 16 m sphere allows space for five levels. This section describes alternates for each of the support components, assuming a sphere diameter of 16 meters.

2.2 Support Structures

Support structures must support all static and dynamic loads placed on the structure. In the event of a vehicle landing in close proximity, the habitat may undergo dynamic loading. Because vehicles will land near the habitat only in cases of emergency, the team assumed static loads for the structure. To fulfill the design criteria for support structures, the team divided the support structures into three components. The components

include vertical supports, horizontal supports, and structural connections. Each support component, as well as advantages and disadvantages, is discussed in this section.

2.2.1 Vertical Supports

The vertical supports must carry all vertical loads within the inflatable structure. Loads to be supported include equipment, housing facilities, various support systems (piping, air ducts, etc.), and crew members. Load estimates show that the floors must support 20.8 lbs/ ft^2 moon load in experimental areas and 8.33 lbs/ft^2 moon load in living areas [1]. The team developed six alternate designs to support the vertical loads. Alternate designs include arches, lunar lander supports, suspension systems, truss systems, multi-level support columns, and individual floors. Each of the alternates, as described below, provides space in the central area of the habitat for transportation between levels.

2.2.1.1 Arches. The first alternate uses arches to support vertical loads. Figure 3 shows the arch arrangement. A number of arches support each level of the habitat. Preliminary calculations show that each level requires at least eight arches to provide adequate support. Appendix B3 contains the preliminary support calculations. Because of space limitations on the first and fifth floors, columns, rather than arches, support these levels have. To transfer vertical loads to the external support frame, the internal supports contact the inflatable shell through reinforced areas, called hard points. In the arch design, the lower half of the inflatable shell contains the hard points. The external frame supports the central columns formed by the arrangement of the arches as well as the perimeter columns.

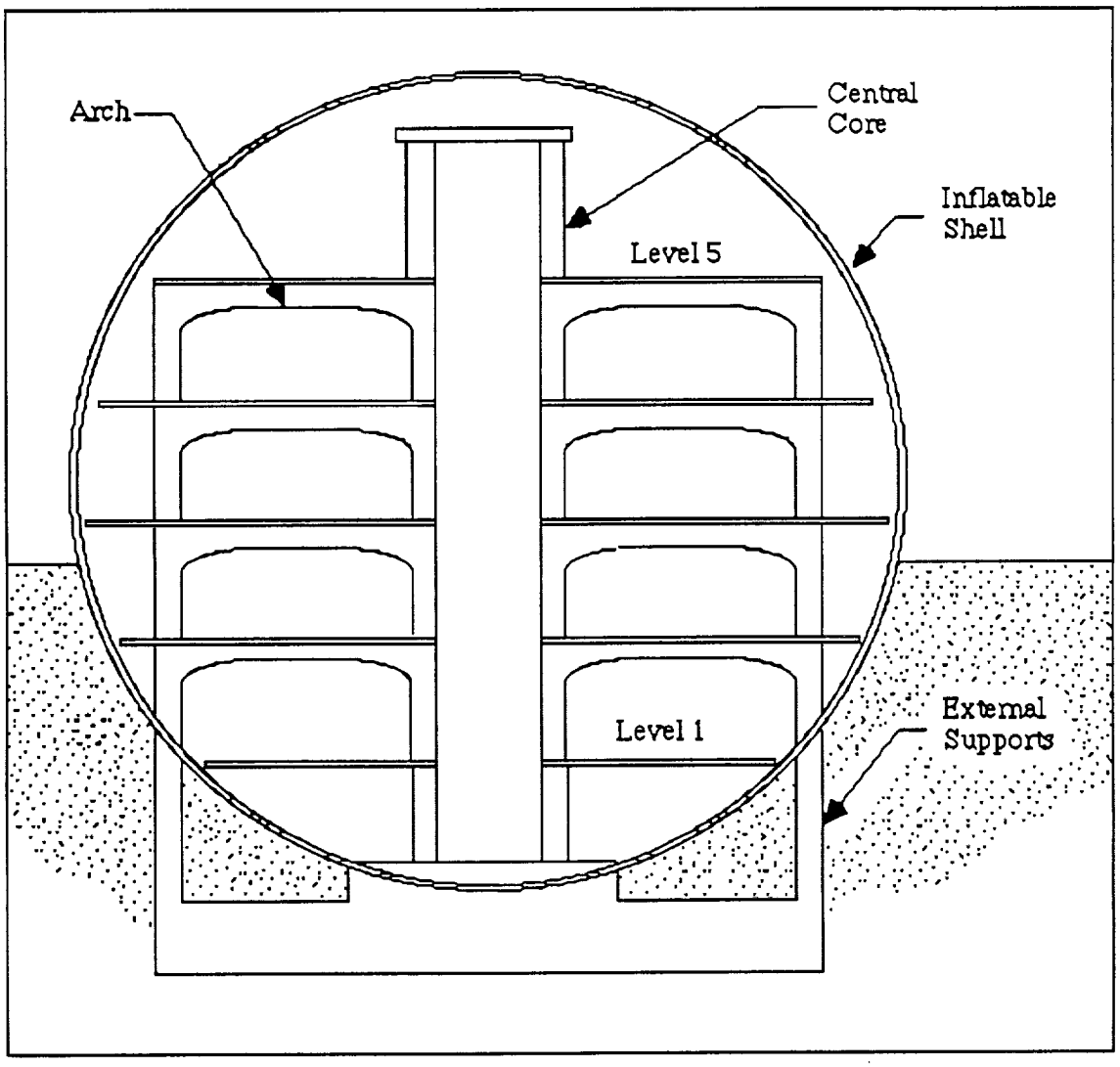

Figure 3. Cross sectional view of the arch design.

The arch design provides several structural advantages. The use of arches, aligned to transfer force to the external supports, minimizes the number of hard points needed on the inflatable shell. Because the arches transfer loads through the columns to the external foundation, the structure only requires hard points at the bottom level. By minimizing the number of hard points, arches reduce the risk of damage to the inflatable shell. Other advantages of arches include simplicity of design and operation. Arches transfer all applied

loads to the columns, eliminating the need for additional supports at the center sections. Because of the force transfer mechanism, arches are widely used structural members that provide sound support for various structural configurations [11].

Although the arches provide many advantages, they also have disadvantages. Because the arches of each level depend on the arches below for support, the design allows for potential series failure. If the first level of the structure fails, the entire structure will collapse. Another consequence of the dependence of the floors is the need for larger members at the bottom of the structure. Because the arches at the lower levels of the habitat support more weight than the arches of the top levels, arch column diameter increases as the distance from the top of the inflatable shell increases. In addition to being structurally dependent, arches are voluminous compared to other structural members. The arches cannot be shaped to conform to the spherical structure. Finally, to transport the arches to the moon, they must be divided into sections. Dividing the arches creates more parts to assemble once they are on the moon, which increases assembly time.

2.2.1.2 Lunar Lander Supports. Previous design teams suggested several designs for lunar landers. In one design, the lander carries the deflated habitat in a cargo bay located on the lander platform [12]. The craft has excavating machinery attached, and when it lands, the attachments excavate regolith from beneath. When enough regolith is removed,the sphere inflates. The lander, with the cargo and engines removed, provides structural support for the above-ground levels of the habitat. The lander legs support the floors of the habitat through hard points on the inflatable shell. Columns connected to the external frame provide support for the below-ground levels. Figure 4 shows the lander-habitat configuration.

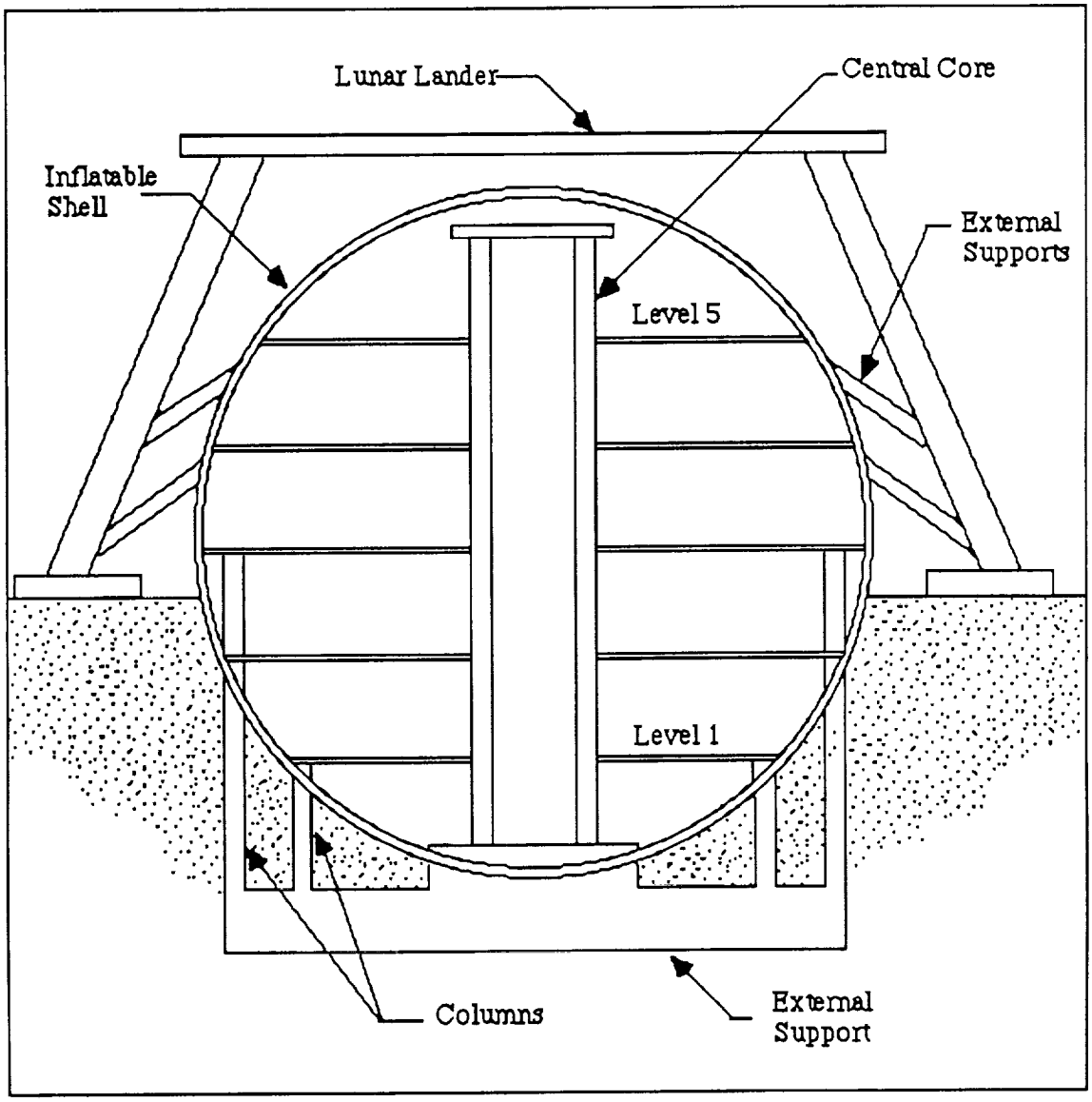

Figure 4. Cross sectional view of the lunar lander supports.

There are several advantages to using the lander for structural support of the habitat. The design reduces costs by providing multiple uses for the lunar lander parts. The lander transports cargo, excavates the site, and supports habitat structures. Positioning the lander platform above the habitat provides radiation protection for the inflatable structure. Unlike

the arch alternate, the lunar lander provides structural independence. If one of the floors fail, the other floors will support the system. Finally, because the support columns are exterior to the habitat, maximum space is available within the habitat.

The number of hard points required for the lander supports is one disadvantage of the design. Each connection to the lander legs requires a hard point on the inflatable shell. Although the lander design provide structural independence, the angled supports of the structure are inefficient compared to perpendicular members. Angled members are more susceptible to failure because of the load distribution. Another disadvantage to using the lander for support is the required site preparation. Much like construction on earth, the soil supporting the habitat must be compacted. Because of the supports extending horizontally from the habitat, this design also requires that the soil around the habitat be compacted. The required site preparation increases assembly time of the habitat. The limited working space under the lander and the complexity of the support structures are two additional disadvantages to this design. Finally, because the supports connecting to the lander are external to the habitat, crews must wear EVA suits to perform work outside the protected environment of the habitat. EVA suits inhibit the mobility of the crew which increases assembly time.

2.2.1.3 Suspension Systems. Unlike other alternates that have columns in the central core area, the suspension system alternate contains one continuous central column for vertical support. The floors of the habitat attach to the central column like cantilever beams. At the perimeter of each level, tension bars or cables support the floors. Contact between the central column and the external supports at the bottom of the habitat provides force transfer to the lunar surface. Figure 5 shows the configuration of the suspension system. If necessary, additional support columns may be placed exterior to the habitat to reduce the load on the central column.

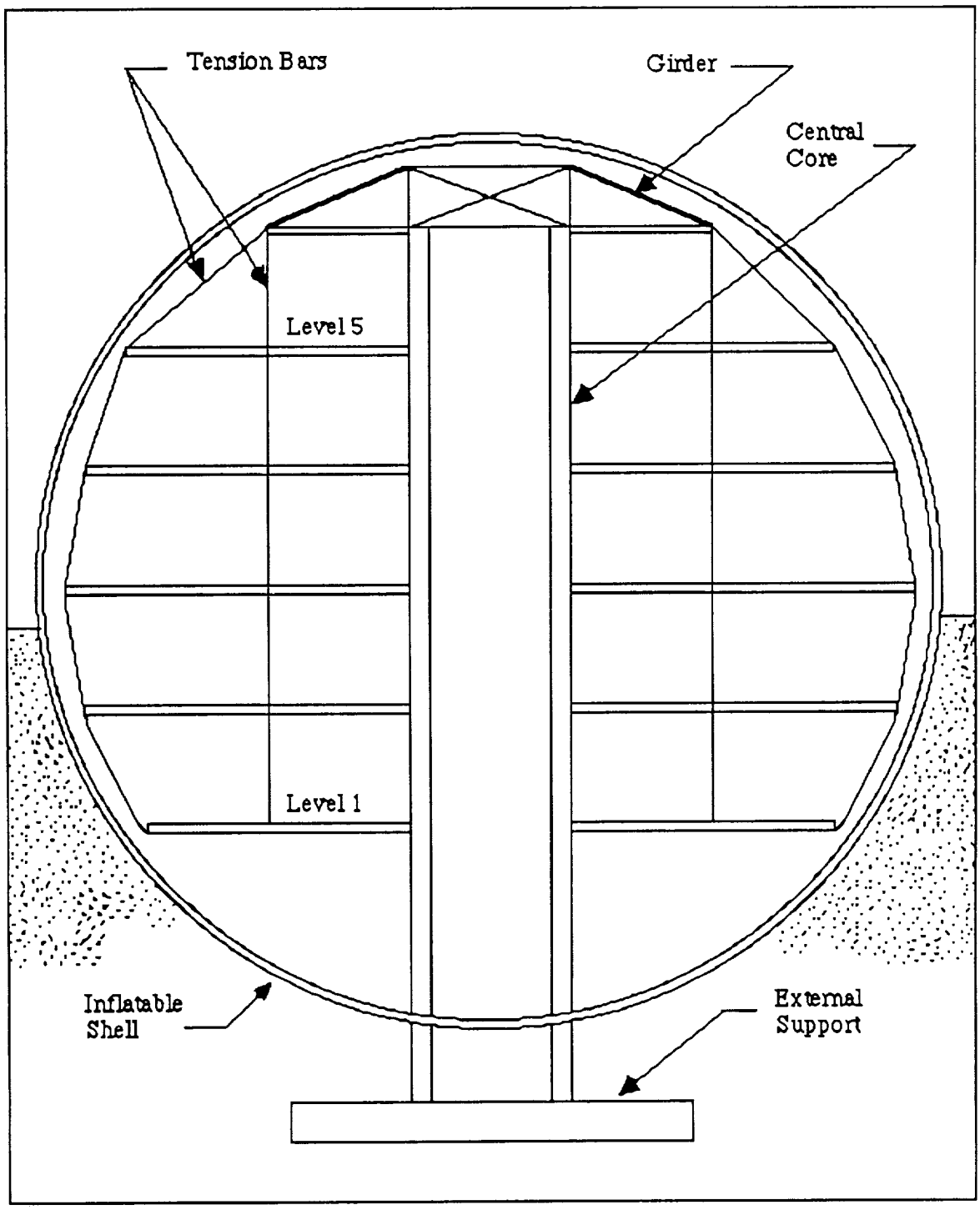

Figure 5. Cross sectional view of the suspension system.

The greatest advantage to using a suspension system is the reduced number of hard points. Because the system does not require columns connecting to the external frame, hard points are only necessary at the bottom of the habitat. Other advantages to the suspension system include minimal size of the members before assembly and maximum use of available internal space after assembly. A final advantage is that the members of the structure can be used in various geometrical configurations.

There are several important disadvantages to using the suspension system. Because of the angle of the members, the tension bars are not in pure tension. The added forces cause instability in the members that may lead to failure. Another disadvantage is the structural dependency of the system. If one bar or hanger fails, the entire structure may fail. Finally, because of the complexity of the structure, crews must have special training to assemble the system.

2.2.1.4 Truss systems. Trusses around the perimeter of each level provide vertical support in this alternate design. Much like Walt Disney's Experimental Prototype Community Of Tomorrow (EPCOT) Center in Florida, the trusses form a spherical structure [13]. Figure 6 shows the truss configuration. The internal structure only contacts the inflatable shell at the lowest level of the habitat. Each floor connects from the perimeter trusses to a column in the center of the habitat.

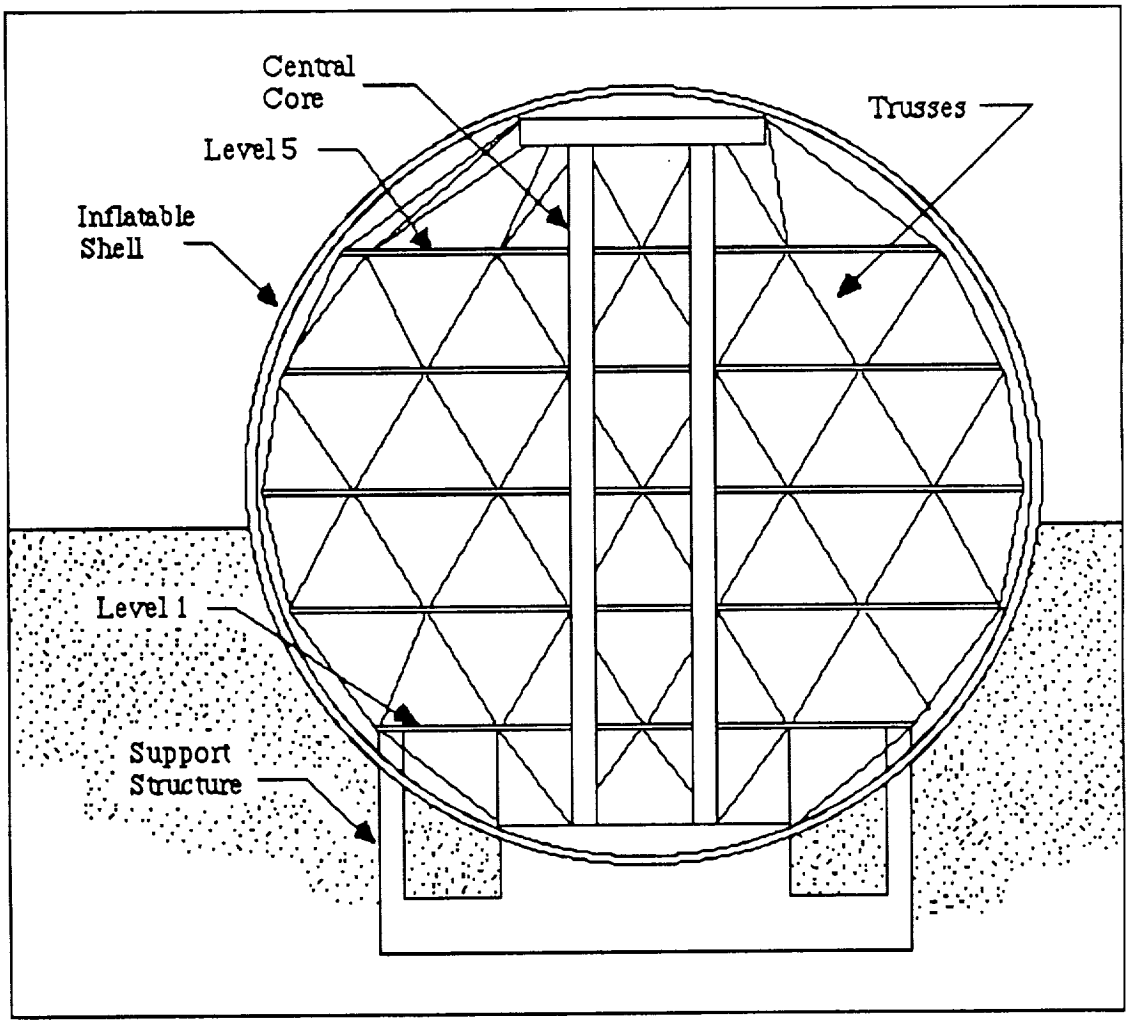

Figure 6. Cross sectional view of the truss system.

Truss systems offer several advantages in structural applications. The members of the truss are lightweight and compact compared to columns or beams. The compact size of the structure minimizes required transportation space, and the lower weight reduces transportation costs. Because the truss system does not require perimeter columns, maximum space within the habitat is available, and the number of hard points is minimized.

Unlike the previous designs, the truss system is a proven concept. Walt Disney's EPCOT Center provides proof that the truss system works in a spherical configuration [13].

One possible design solution for the truss system is to use an expandable truss system. In this system, sections of the truss system are pre-assembled to fold and unfold. A disadvantage to using the expandable system is that the assembled joints require attachments to lock them in place. The attachments increase the number of connections, increasing assembly time. A final disadvantage to the truss system is the dependence of the truss members on each other. Failure in one part of the system can lead to catastrophic failure.

2.2.1.5 Multi-level Support Columns. In the multi-level support column alternate configuration, columns provide vertical support for the floors. Each set of eight columns supports two consecutive floors. For example, the forces of floors two and three transfer to the external support through the same columns. Figure 7 shows the column arrangement. Eight columns on each floor, four at the perimeter and four at the center, provide vertical support. The contact points between the external support and the columns provide force transfer to the lunar surface.

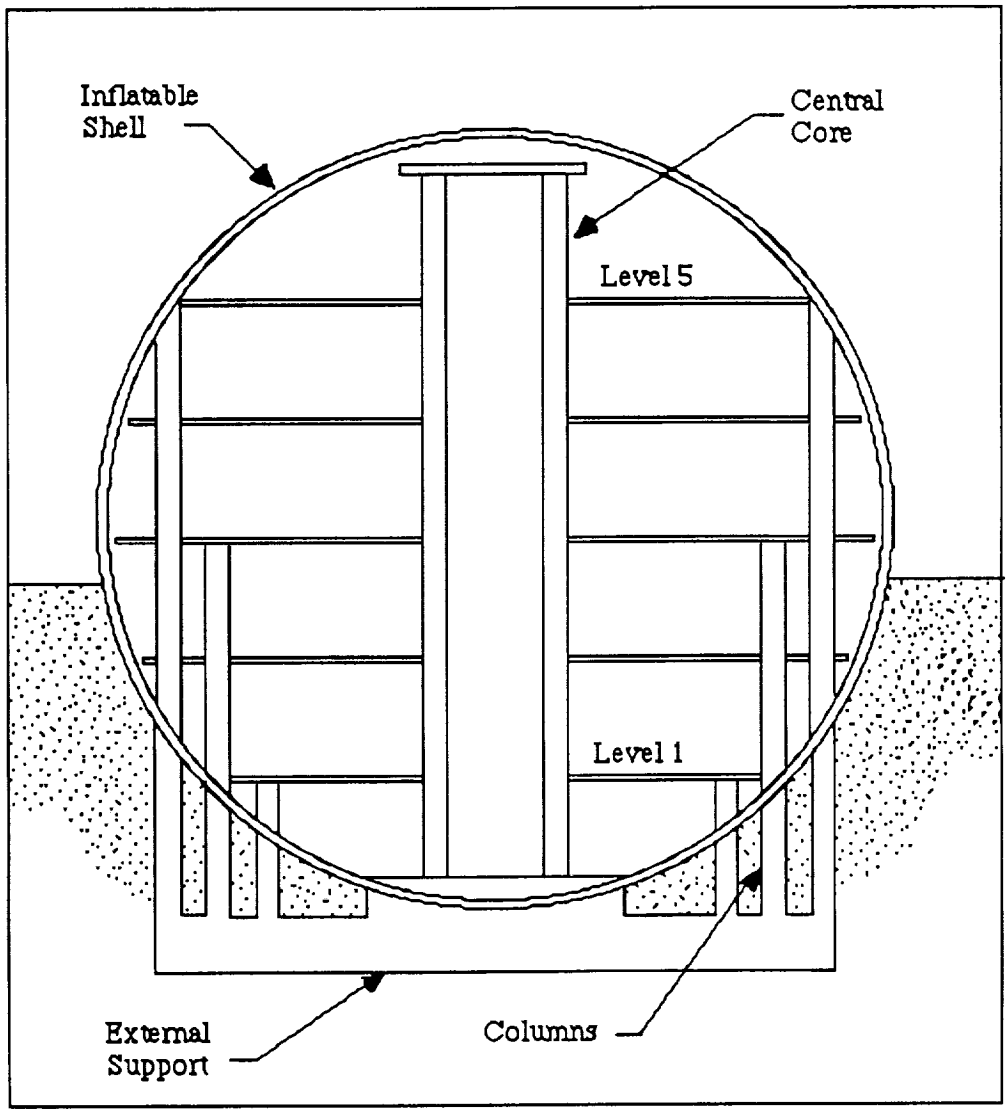

Figure 7. Cross sectional view of the multi-level support columns.

By providing support for multiple levels, this alternate provides structural independence, reducing the possibility of series failure. The multi-level support design requires fewer support columns than the other alternates. By limiting the number of columns required, the design limits the number of parts to be assembled.

The possibility of buckling in the columns introduces problems in the multi-level design. Columns supporting the upper habitat levels must be longer than columns supporting individual levels. Euler's equation for buckling shows that the length of a member is inversely proportional to the force the member can support [20]. Therefore, longer columns require a larger diameter to prevent buckling. The greater size of the columns is a disadvantage because the columns require more room for transportation and weigh more than truss members. The size of the columns increases assembly time because crews need mechanical assistance for lifting. Finally, location of the columns within the habitat decreases the amount of available space.

2.2.1.6 Independent Levels. Separate columns provide support for each level of this alternate, providing structural independence. At least four columns arranged around the center of the habitat transfer force from each level to the external supports at the bottom of the habitat. Each column extends downward through the lower level floors to the external supports. Figure 8 shows the arrangement of the central columns. Columns exterior to the habitat, at the perimeter of each level, support the floor loads. The columns for above ground floors attach to the frame extending horizontally from the habitat. The columns for below ground and ground-level floors attach directly to the external frame. Each exterior column attaches directly to the external frame.

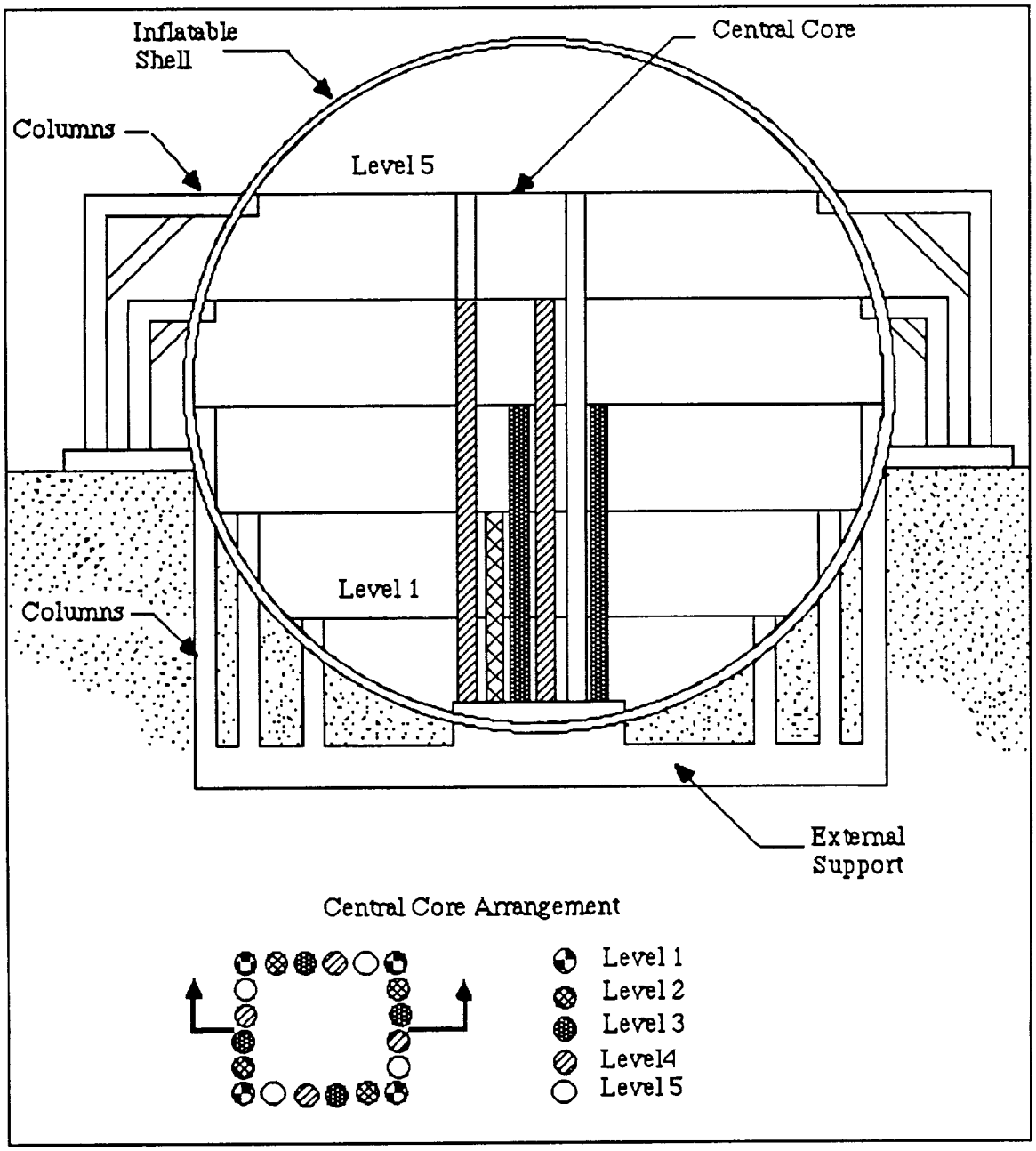

Figure 8. Cross sectional view of the independent level design.

This design has an advantage over other designs because it limits the possibility of series failure by providing structural independence.

There are several disadvantages to the independent level design. Like the lunar lander design, this design requires additional site preparation. Again, the habitat supports rest on the regolith, requiring that the area be compacted. Also similar to the lander design, the independent floors require assembly of support members external to the habitat. The complex arrangement of the columns increases the number of parts required, increasing assembly time. In addition, the use of columns to support each floor individually requires hard points on each level in at least four places. Because the columns inside the habitat must be lengthy in order to support the top levels, potential buckling problems exist. Finally, the increase in number of assembly parts, size of the parts, and weight of materials to be transported to the moon, increases the transportation cost.

2.2.2 Horizontal Supports

Horizontal support members support the weight of the floors, equipment and furniture placed on the floors, and crew members. In addition to supporting these loads, the horizontal supports transfer loads to the vertical support members. The main design considerations for the horizontal supports were deflection minimization, buckling prevention, and bending and shear stress minimization. The team considered five alternates for the horizontal supports: beams, trusses, expandable trusses, floor/truss systems, and box girders. This section describes each horizontal alternate.

2.2.2.1 Beams. The first alternate for horizontal supports is beams. On each level of the habitat, eight beams extend radially from the central core toward the inflatable shell. Cross beams, connected to each of the radially placed beams, provide additional

support for the floor systems. Figure 9 shows the configuration of the beams. Each floor has the same beam configuration. Advantages of using beams for horizontal support include minimizing the number of members required, maximizing the space available for floor use, and minimizing floor deflection. The disadvantages of beams are the weight and size of members needed to support structural loads. Because beams must be large in order to support loads, crew members must have mechanical aid to lift the parts.

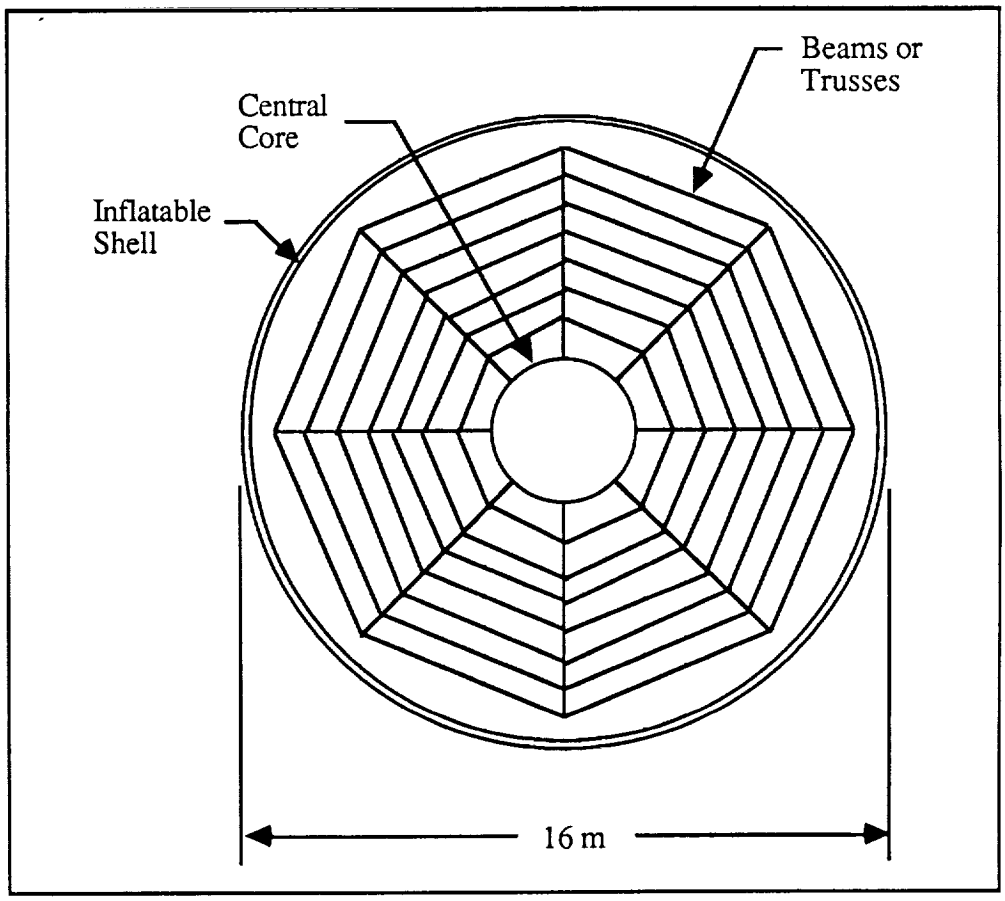

Figure 9. Horizontal support beam or truss configuration.

2.2.2.2 Trusses. Trusses providing horizontal support extend radially from the central core in the same fashion as the beams. Figure 9 shows the configuration. Again, eight trusses connect in a radial configuration with several trusses as cross members.

There are several advantages to using trusses as horizontal supports. The members are smaller than beams and crew members should not need mechanical assistance for lifting. The light weight of the members reduces transportation costs. Finally, trusses minimize floor deflection. Truss sizes depend on the loads to be supported. Trade-offs in truss height, truss member diameter, and truss member angles must be considered when designing to specified loads. In order to minimize transportation costs and maximize available space in the habitat, the team decided to minimize truss member size and weight. As the diameter of the truss members decreases, the truss height required to hold a specified load increases. Following this assumption, the major disadvantage to using trusses is their height compared to beams.

2.2.2.3 Expandable Trusses. Expandable trusses are trusses that collapse for disassembly and expand for assembly. The expandable system collapses and expands using scissor-like actions. The joints in the truss allow the bars to fold together when the lower bar is removed. To provide horizontal support, six expandable sections connect together at a central location. During shipping, the structure collapses around the center connector. For assembly, the sections expand and the lower bar holds the sections rigidly in place. The expanded sections connect to other expanded sections to form a network of trusses. Figure 10 shows the attachment of the expandable sections. This design minimizes the required transportation storage space. Another advantage is that the trusses are pre-assembled, minimizing assembly time on the moon. Finally, the uniform length of the truss members and varying expandable section sizes provides adaptability to various geometries. In addition to the height disadvantages of the rigid truss system, expandables require more connections. When the expandable truss is positioned, the joints require attachments to lock them in place. The additional attachments increase the assembly time.

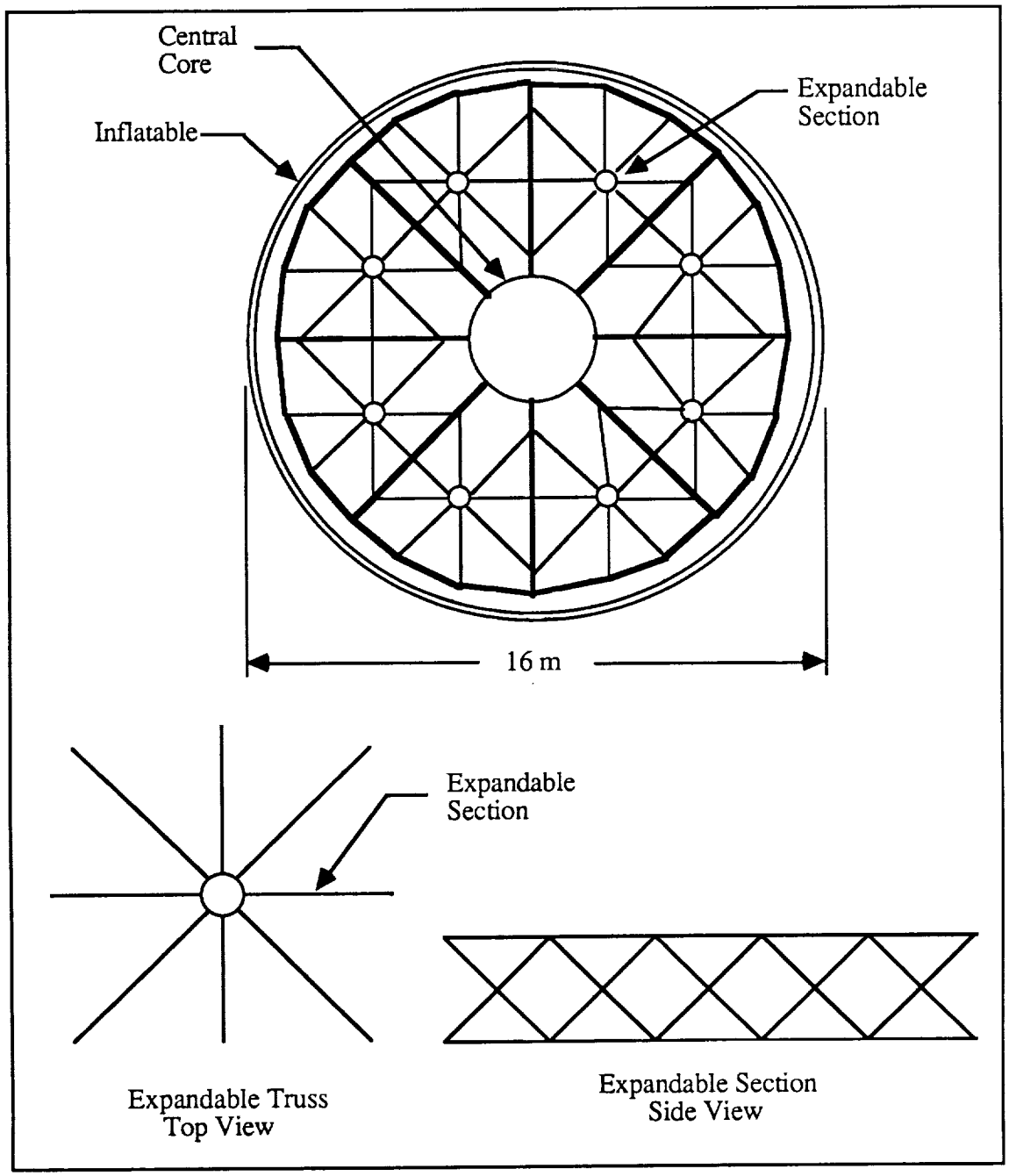

Figure 10. Configuration and section views of the expandable trusses.

2.2.2.4 Floor/Truss Systems. The floor/truss system combines horizontal support trusses with a floor system. Sections of the floor/truss system connect together in a network similar to the network of the expandable sections. The network extends radially outward from the central core toward the inflatable shell. Figure 11 shows the configuration of the network. This system provides all the advantages and disadvantages of the trusses. Additional disadvantages of the floor/truss system are the space required for transportation and the weight of the sections. Because each section contains the horizontal support members as well as the floors, the sections are heavier than other alternates. A final difference is that the floor/truss system minimizes assembly time on the moon, while the truss systems minimizes assembly time on earth.

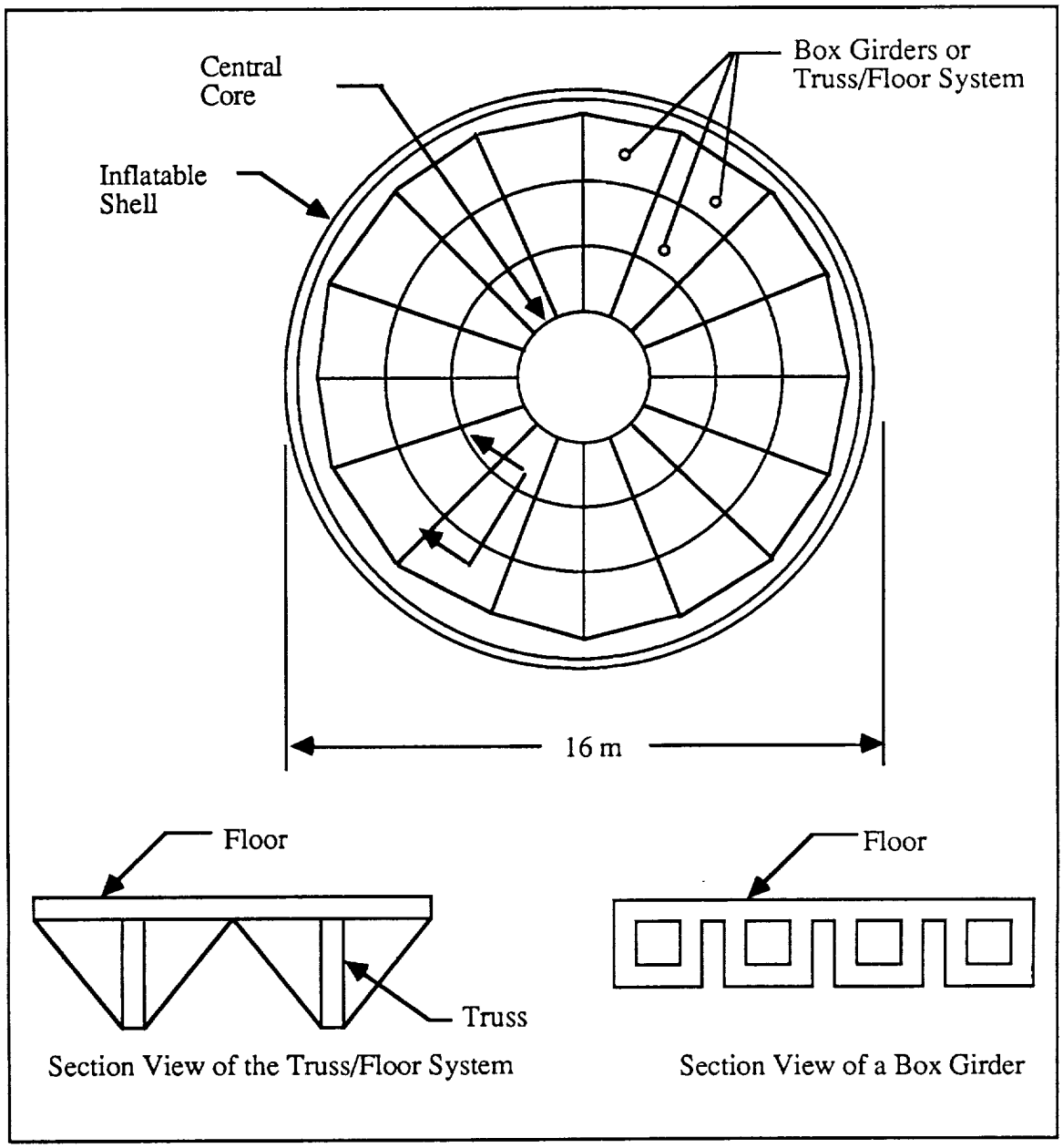

Figure 11. Floor/truss system and box girder section configurations.

2.2.2.5 Box Girders. Box girders are similar to the floor/truss system. Instead of trusses, the floor connects to hollow beams. Figure 11 shows the box girder configuration. The arrangement of the box girders as floor supports is the same as for the

floor/truss system. Like the floor/truss systems, the box girders minimize assembly time on the moon, minimize deflection, and are adaptable to different configurations. Although there are many similarities between box girders and floor truss systems, the box girder beams are usually more massive than the truss members.

2.2.3 Structural Connections

The principle function of any structural joint is transferring forces safely between the members meeting at that joint. If the joints in a structure are weaker than the structural members, failures will occur at the joints. For this reason, fastening mechanisms are an integral part of any structural design. Because the behavior of connections depends on loading conditions, selection of structural connections depends on the type and magnitudes of the applied loads. Loading possibilities for the habitat support structure included static and dynamic loading. Loads include shear, tension, compression, fatigue, and vibration. Engineers who design structures with connections that exhibit higher failure stresses than the structural members often chose to neglect the effects of the joints on the behavior of the structure [16].

In considering alternate structural connections, the team identified several design considerations. The considerations include joint strength, connection rigidity, slip prevention, and joint ductility. Permanence of the joint was also a consideration in choosing connections. Because the habitat may require disassembly after use, the team chose not to consider adhesive bonding techniques. Connectors considered as alternates included pin connections, nut and bolt connections, and weld connections. Included in the pin connection category were cotter pins and knuckle joints. This section provides information on typical applications of each connecting mechanism.

2.2.3.1 Pin Connections. The primary function of structural pins is transmitting shear forces. Ideally, pins undergo shear loading only. Actually, most pins experience a combination of bending and shear loading. In many cases, bending and shear stresses can be simply expressed in terms of the average compressive stresses on the projected pin area [17]. Exceptions include pins with lengths less than or equal to the diameter. For these cases, the combined effects of bending and shear should be included in calculations. Because of the variable behavior of pins undergoing loads, pin design requires careful consideration of the loads applied. In using pins for structural connections, designers must take into account the approximations made concerning the behavior of the joints.

Several types of connections employ pins as fastening devices. Two commonly used connections are cotter joints and knuckle joints. In applications where simplicity, assembly time, and disassembly time are important, cotter joints provide structural integrity. Cotter joints consist of keys, sockets, and shanks. The shank is usually a cylindrical part and fits into the key to hold the parts in place. Compression of the key and extensions of the opening in the sockets resist the external force applied along the shank. Figure 12 shows the cotter pin configuration [17]. Designers can assemble cotter joints for unstrained or prestressed conditions, depending on the loading. Design considerations differ for the two conditions. For the unstrained conditions, shear and compression govern the pin design, crushing and tension govern the socket design, and tensile strength governs the shaft. Cotter pins provide structural integrity for shear, compression, or tension loading.

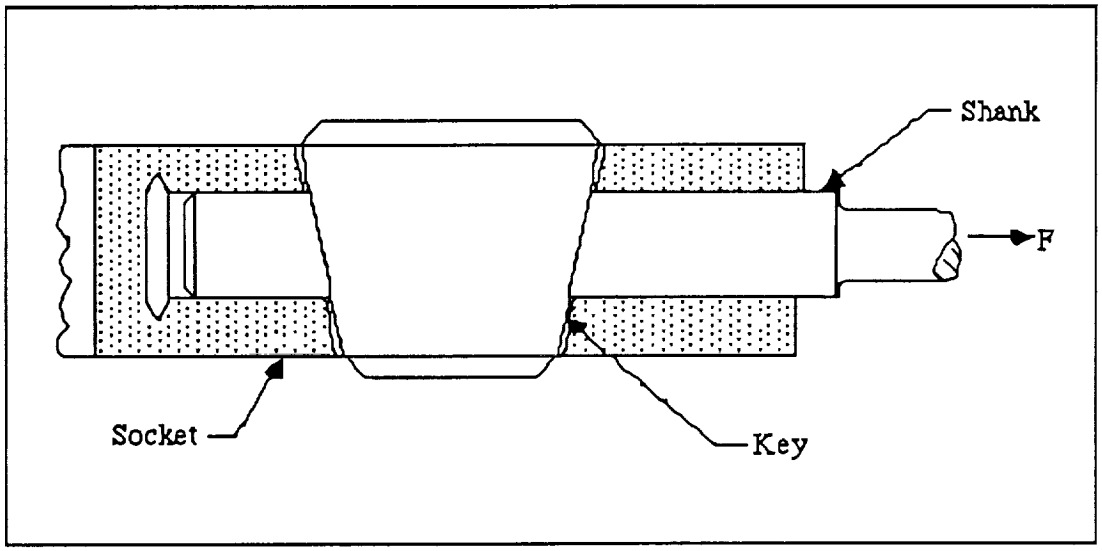

Figure 12. Section view of a cotter pin joint [17].

Knuckle joints consist of cylindrical pins placed through eyebars to join the structural members. The primary design consideration for knuckle joints is the strength of the pin. Loading conditions under which knuckle joints exhibit the greatest strength include tension, tear-out shear, and local compression due to pin contact. Figure 13 shows the configuration of the knuckle joint [17]. When loaded, knuckle joints undergo unavoidable local deformation of the pin and contacting parts. In most cases, designers use the average compressive stress on the projected area of the pin as a worst case situation. The maximum bending stress in the knuckle joint pins is located at the extreme fiber while the maximum shear is at the centerline.

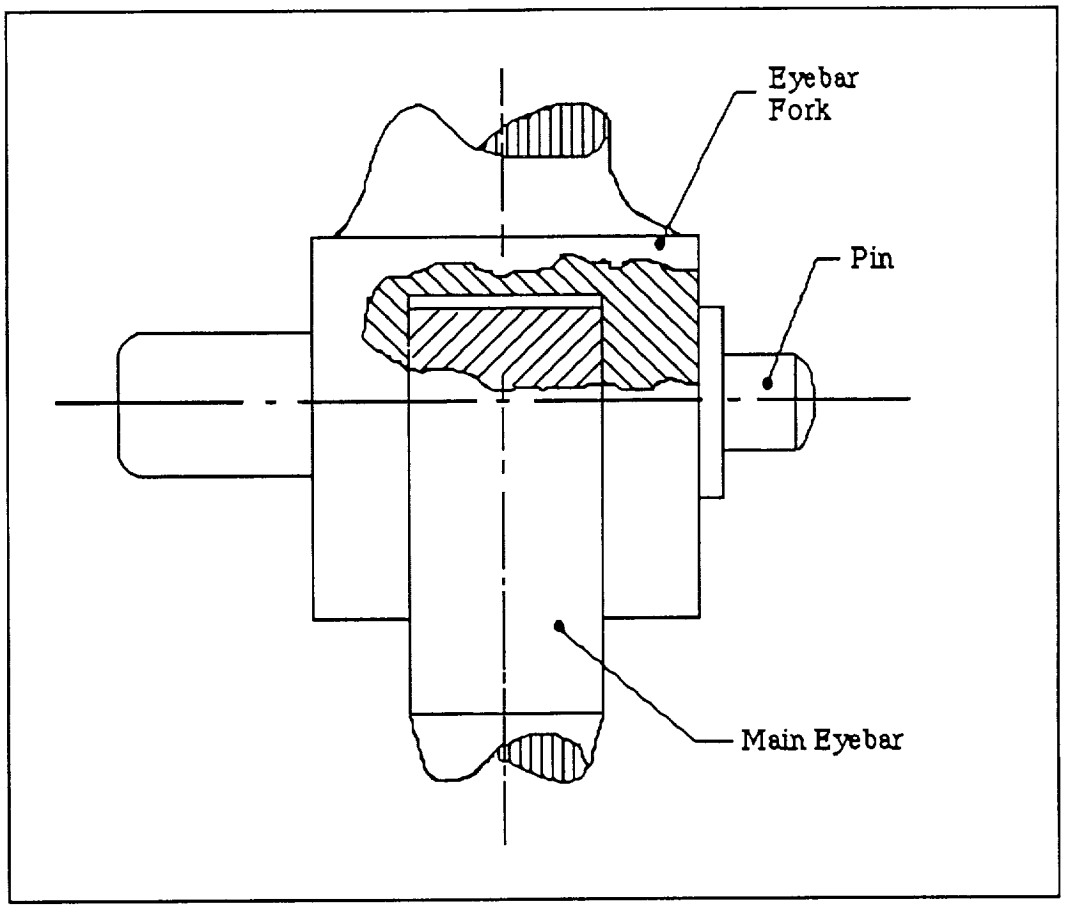

Figure 13. Partial section view of a knuckle joint [17].

2.2.3.2 Nut and Bolt Connections. Nuts and bolts are among the most commonly used structural connections today. Bolts can act in shear, tension, or a combination of both. In simple joints, designers model bolts as acting in shear only [16]. In addition to being used in pure shear, bolts can be used in pure tension. One of the major design concerns when using bolts in pure tension is slip in the joint. Many designers use bolts in tension as hangers for air handling units. Bolted connections also prove useful under combinations of shear and tension loading. Forces carried by the bolts depend on preload, external force, and the spring constant of the entire joint. In general, bolts can

tolerate higher clamping forces and exhibit higher strength under shear loading than other fastening mechanisms [16].

2.2.3.3 Weld Connections. Welding, like nut and bolt fastening, is a popular connection method. The primary functions of a weld connection are to transfer stress across a mechanical boundary and to maintain a geometrical relationship between the various components of a system [17]. Because of structural disassembly concerns, the team only considered weld connections for members to be assembled before transportation to the moon. Design considerations for welding include weld strength, stiffness, deformation, load capability, and economy. Permissible stresses on welded joints depend on the base metal, weld metal, and type of weld [16]. In general, stresses should be kept at a minimum because residual stresses in weld connections can approach the yield strength of the weld material and cause failure.

In order to join two parts, welders must have knowledge of types of welds, allowable stresses, working equations, material limitations, and behavior of welded joints. This required knowledge is a disadvantage in using welds rather than conventional connection methods. Another problem encountered in welding is distortion. Distortions of the base metal may result from residual stresses in the material. With proper care in welding, welders can avoid these stresses. Although weld connections require specialized labor, they do offer advantages over other connection methods. If the procedure is performed properly, welds are simpler, more compact, and lighter weight than nuts and bolts or pins. Welds also avoid complications such as drilled holes and structural framing. A final advantage to welding is the minimal maintenance required compared to other fasteners.

2.3 Assembly Methods

Like structural connections, assembly methods are dependent upon the alternates chosen for horizontal and vertical supports. The assembly method also depends on the type of connections chosen. Due to time constraints, the team decided to design the structure assuming that humans, not robots will construct the habitat. Because the habitat will be constructed manually, the team emphasized simplicity of assembly methods and connections. Additionally, providing simple connections allows crews to work in EVA suits. In the event of pressure loss, the crew wear suits to repair the structure. This section describes possibilities for assembly methods including a crane, a pulley-rail system, elevators, and a conveyor belt.

2.3.1 Crane

Attaching a crane to the top of the central core allows crew members to lift and hold structural members in place. The crane rotates around the core enabling assembly of the various levels. Figure 14 shows the crane assembly. Crews attach the crane to the central core before packaging the structure for shipping. The pre-assembled central core and attached crane rest inside the deflated shell. For assembly, the crew uses cranes already on the lunar surface to hold the core in place [12]. The shell of the habitat is then inflated and assembly of the internal structures begins. By having a pre-assembled core, this assembly method reduces assembly time on the moon. The crane enhances the assemblability of the structure because it handles various size and weight members, and supports members during connection. After completion of habitat construction, the crane can be used for other purposes within the habitat. Disadvantages to the crane system include the size and weight of the crane assembly. Because the crane rests on the central core columns, the

columns must be larger in order to support the weight of the crane and the horizontal supports. Finally, size limitations within the sphere limit mobility of the crane.

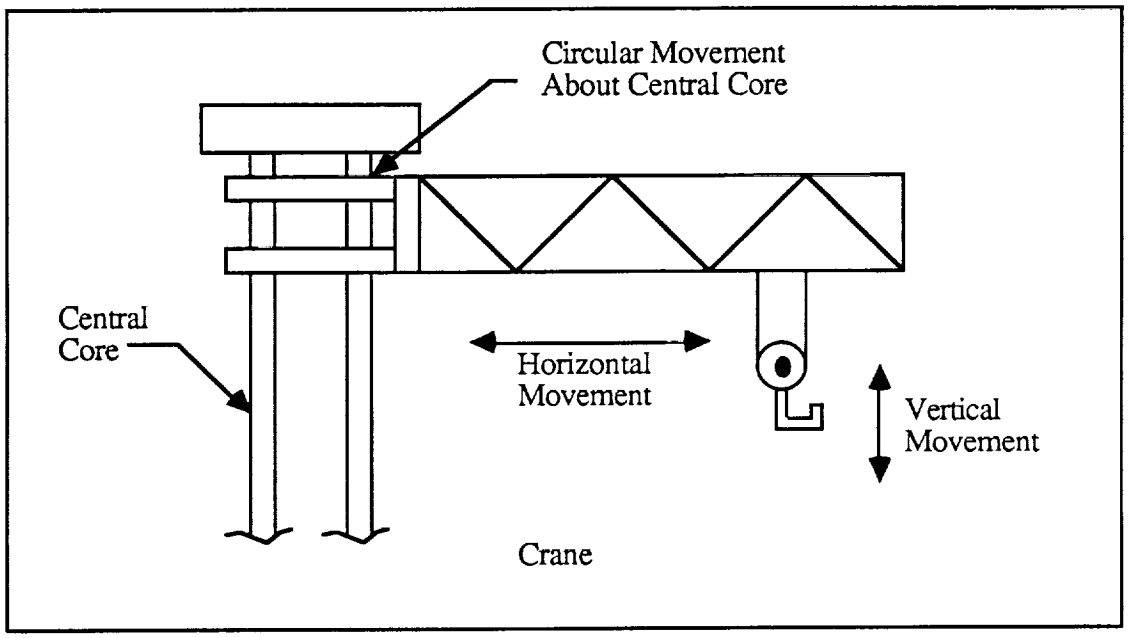

Figure 14. Cranes provide vertical, horizontal, and radial motion.

2.3.2 Pulley-Rail System

Like the crane, the pulley-rail system attaches to the central core of the habitat. The pulleys run on a rail system which extends radially from the core toward the inflatable shell. Several circular rails enable the pulleys to move outward to various diameters. Figure 15 shows the configuration of the rail system. To aid in lifting and positioning members during assembly, crew members place the motorized pulley along the rails in various positions. The entire rail system moves vertically along the central core. Advantages of the pulley system include simplicity and versatility of the mechanism and reduced assembly time. Upon completion of assembly, the pulleys can be used for other

projects. An advantage of the pulley system over the crane is the lighter weight of the system. One disadvantage of the pulley system is the complexity of constructing the rail system. The system is too large to be connected to the central core before shipping, so crews must assemble the system on the moon.

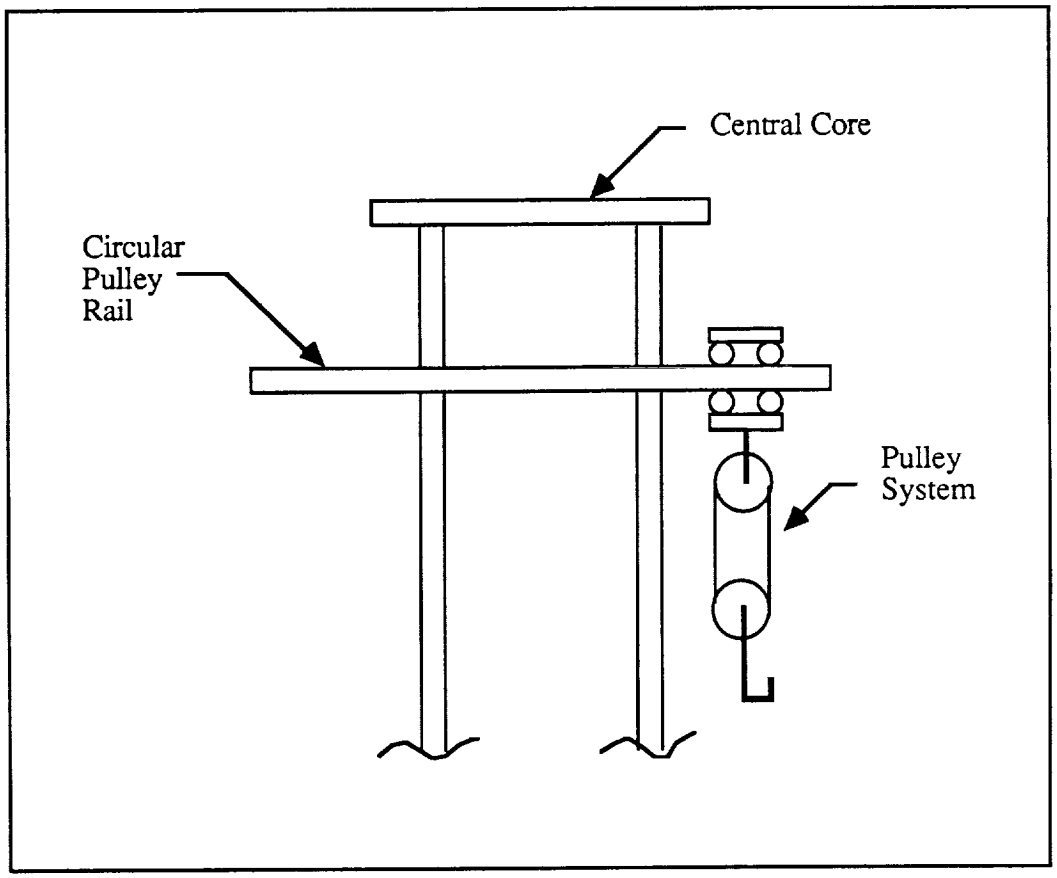

Figure 15. Pulley-rail system attached to the central core.

2.3.3 Elevators

An elevator, located in the central core, enable crew members to transport materials vertically within the structure. Figure 16 shows the location of the elevator. This system

requires the use of one continuous central core to support the elevator. After assembly of the habitat, the elevator can transport the crew members between floors. An advantage of elevators is that they can be assembled inside the core before transportation. Unlike the crane or pulley-rail system, the elevator fits within the central core. Crews on earth complete elevator assembly before shipping the equipment to the moon. One major disadvantage to using elevators is space limitations. Transporting structural members between floors requires the members to fit inside the elevators. Another disadvantage of the elevators is that they do not provide support for members during assembly. The final disadvantage to elevators is the lack of mobility. Members can only be transported vertically within the central core, so the crew must transport structural members horizontally inside the habitat.

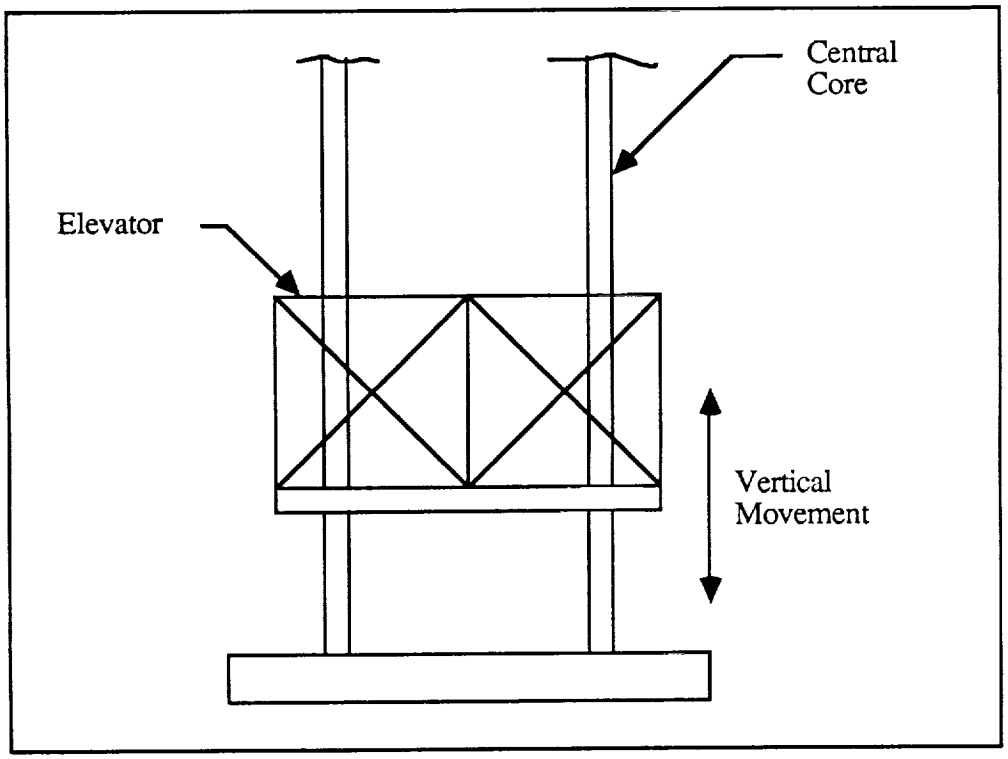

Figure 16. Elevators mounted inside the central core.

2.3.4 Conveyor Belt

In this assembly method, a conveyor belt attaches to the airlock to aid in transporting material to the various levels of the habitat. Figure 17 shows the conveyor belt assembly. As crews complete construction of various levels, they move the conveyor up to the next level. The conveyor belt offers the advantage of not requiring a bulky, continuous central core. Also, after completing construction, crews can remove the conveyor belt to use it for other purposes. There are several disadvantages to using a conveyor belt. The conveyor is too large to fit within a pre-assembled core for transportation. Installing the conveyor belt after habitat inflation increases assembly time. Crews cannot move materials completely across the habitat because of the space limitations. The conveyor belt does not fit across the entire sphere, so crews must move structural members manually after entrance through the airlock.

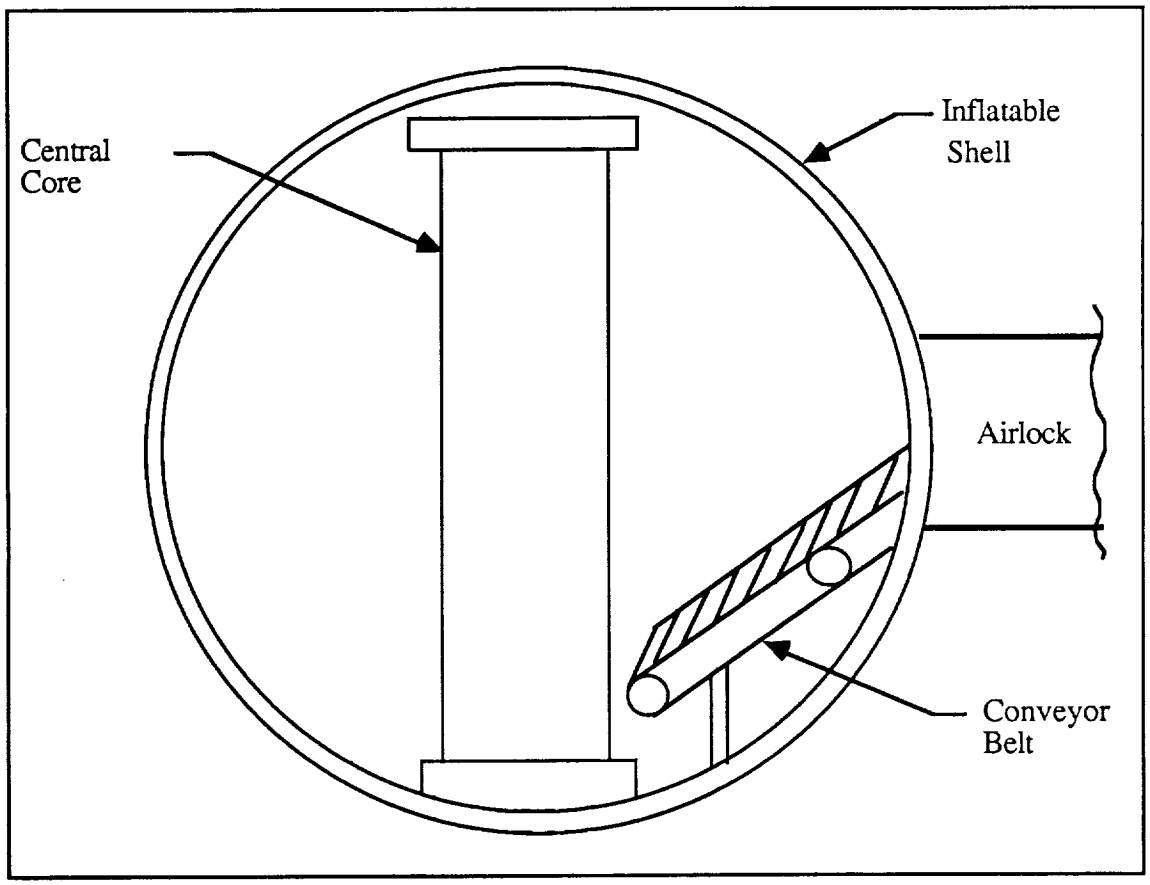

Figure 17. Conveyor belt used for transporting materials.

2.4 Materials

To choose alternate materials for the support structures, the team focused on several criteria. The main criteria include strength-to-density ratios, compressive strength, tensile strength, density, and coefficient of thermal expansion. Because the inflatable shell provides protection for the completed structure, radiation effects and atmospheric effects were not concerns for material selection. The materials chosen for consideration were aluminum alloys, titanium alloys, and reinforced polymer composites. Because structural steel is one of the most commonly used metals for terrestrial structures, the team used its

properties as a basis for comparison. Figures 18 through 22 show comparisons between properties of the alternate materials.

2.4.1 Aluminum Alloys

Aluminum alloys are popular in space applications for several reasons. The major reason for their popularity is the high strength-to-density ratio compared to other metal alloys. The density of aluminum can be as little as 1/3 the density of structural steel [7]. Manufacturers of aluminum increase the strength-to-density ratio of the metal by adding lithium. The substitutional atoms of lithium increase the strength and decrease the density of the aluminum alloy structure. Adding as little as 1 percent lithium decreases the density of the metal by 6 percent [8]. Other reasons for the popularity of aluminum alloys include lower cost, better machinability, and better weldability than structural steel. Heat treatable alloys are useful in structural applications because they have good manufacturing characteristics. The alloys chosen for alternates were the 2XXX, 6XXX, and 7XXX series aluminums.

2.4.1.1 2XXX Series. Because they are high strength alloys, the 2XXX series aluminums are good candidates for structural applications. Yield strengths of the 2XXX series aluminums range from 70 to 455 MPa [8]. Heat treatable 2XXX series aluminums include 2011, 2014, 2017, 2018, and 2024 alloys. The team did not consider the 2024 aluminum as a candidate material because, compared to the other 2XXX series aluminums, it has poor formability and weldability [8]. Although copper is the main alloying element in 2XXX series aluminums, other elements can be added to alter the properties of the metal. Other alloying elements include lithium, manganese, nickel, titanium, and chromium.

2.4.1.2 6XXX Series. Although the 6XXX series aluminums are medium strength alloys, they have other qualities that make them good candidates for structural applications. Strengths of the 6XXX series range from 50 to 380 MPa [8]. Heat treatable alloys in the 6XXX series include 6061, 6062, 6063, and 6151 alloys. The 6061 and 6063 alloys have better weldability and formability than the 2XXX series aluminums. Magnesium and silicon are the main alloying elements for the 6XXX series. These alloying elements increase the castability and strength of materials.

2.4.1.3 7XXX Series. The 7XXX series aluminums are high strength alloys. The yield strengths range from 95 to 625 MPa [8]. Heat treatable alloys include 7075, 7079, and 7178 alloys. The team only considered the 7075 and 7178 alloys as candidates because the weldability and formability of the 7079 alloy is lower [8]. The main alloying element in the 7XXX series aluminums is zinc, which is a well known element for solid solution strengthening of materials.

2.4.2 Titanium

Like aluminum, titanium is a popular metal for space applications. There are several reasons for the popularity of titanium. Titanium alloys are available with densities as low as 1/2 the density of structural steel [8]. High specific strengths and fatigue resistance compared to steels are other factors adding to titanium's popularity.

There are five grades of titanium alloys. As with most materials, there are trade-offs between the mechanical properties of the alloys. For the best formability and ductility, grades 1 and 2 should be used [8]. Grades 3 through 5 have higher tensile and yield strengths, but lower formability and ductility. Grade 4 has the highest hardness with yield strength of 482 MPa. Although titanium alloys have higher strength and ductility than the aluminum alloys, their weldability is lower. Titanium and its alloys cannot be welded in air. The metals must be welded in a vacuum or inert gas [7]. Adding elements such as

aluminum and vanadium increases the weldability and strength of some alloys. Like aluminum, the cost of titanium is higher than that of structural steel. Another disadvantage of titanium is that coatings must be used to provide wear resistance.

2.4.3 Reinforced Polymer Composites (RPC)

In the past decade, research of polymer composites has steadily increased. There are many new materials available for use today. Recent commercial interest in fiber reinforced polymers for structural applications led the team to investigate fiber reinforced composites with high strength-to-density ratios [9]. The materials found to have the highest strength-to-density ratios were carbon fiber reinforced polymers, glass reinforced polymers, and aramid fiber reinforced composites. Composites with densities as low as 3/5 the density of structural steel are commercially available [9].

In fiber reinforced polymers, the fibers are the load-carrying members [10]. The surrounding matrix holds the fibers in place and acts as a load transfer medium between the fibers and other structural supports. Other functions of the matrix include protection of the fibers from damage due to elevated temperatures and humidity [10]. Manufacturers of fiber reinforced polymers control the mechanical properties of the material through the stacking process. Stacking layers of the thin fibers gives the composites a lamellar structure. Mechanical properties of the materials vary according to the number and orientation of the layers. Composites with specific strengths up to six times greater than that of structural steel are possible [9].

Many polymer matrices exist for commercial use in fiber reinforced composites. Among the popular matrix materials are epoxy resins, polyesters, and polyether etherketone (PEEK). For applications where high strength, stiffness, and toughness is required, epoxy resins are preferred over polyesters [9]. Thermosetting epoxies containing carbon or aramid fibers provide a higher range of operating temperatures than the thermoplastic

PEEK [15]. Carbon and aramid fiber reinforced epoxies are gaining increasing recognition as materials for aerospace applications [15]. For this reason, the team chose to investigate fiber reinforced epoxy matrices.

2.4.3.1 Carbon Fiber Reinforced Polymers (CFRP). Carbon fibers offer the highest strength of all reinforcing fibers [9]. The fibers do not suffer from stress corrosion or rupture failures at room temperature. Compared to other reinforcing fibers, carbon fibers offer outstanding high temperature strength. Starting materials for carbon fibers include rayon and polyacrylonitrile (PAN) [9]. For higher temperature service and higher strengths, the PAN provides better characteristics. Although the matrix in which the fibers are placed may be affected, carbon fibers are not affected by moisture, atmosphere, solvents, bases, or acids at room temperature [9]. The most common method of shipping carbon fibers is to place them in an epoxy environment [9]. Placing the fibers in epoxy provides abrasion resistance during handling and also provides an epoxy matrix compatible surface. To use other polymer matrices, special treatments must be used. Because of the compatibility of PAN produced carbon fibers with epoxy resins, the properties of these materials were used in Figures 18 through 22 for material property comparisons.

2.4.3.2 Glass Fiber Reinforced Polymers (GFRP). Glass fibers, produced from silica and the silicates, exhibit bulk glass properties. These properties include strength, flexibility, lightness of weight, and processability [9]. Compared to unreinforced polymers, glass reinforced polymers exhibit high stiffness, strength, and toughness. The glass reinforcement also provides dimensional stability. Because the glass fibers use organic binders or coatings, the presence of radiation is an important design concern. Commonly used organic coatings are readily degraded by all kinds of radiation [9].

The three main types of glass fibers used for polymer reinforcement are E-glass, C-glass, and S-glass fibers. For applications requiring strength and electrical resistivity, E-glass fibers are preferred. C-glass provides good characteristics in composites that contain acidic materials. When the application requires high tensile strength, S-glass fibers are preferred [8]. Because S-glass fibers provide the highest strength, the team chose S-glass as an alternate. Figures 18 through 22 compare the properties of S-glass fibers to the aramid fibers, carbon fibers, and metals.

2.4.3.3 Aramid Fiber Reinforced Polymers. All aramid fibers are variations of poly para-phenyleneterephthalamide. They are thermoplastic polymers that, upon heating, decompose before reaching their melting points [9]. The manufacturing processes for aramid fibers are complex and involve aggressive chemical species. Aramid fibers exhibit better qualities than the S-glass fibers for high tensile strength applications. Although the aramids exhibit high tensile strengths, the compressive strengths are considerably lower than those of the carbon fibers. Unlike the carbon fibers, aramids absorb moisture and show poor adhesion to metals. Compared to the glass fibers, aramid fibers show higher strength, lower density, and higher toughness. The most widely used aramid fiber for structural applications is the DuPont trademark material, Kevlar 49 [9]. For this reason, the team chose to use Kevlar 49 properties for material comparisons.

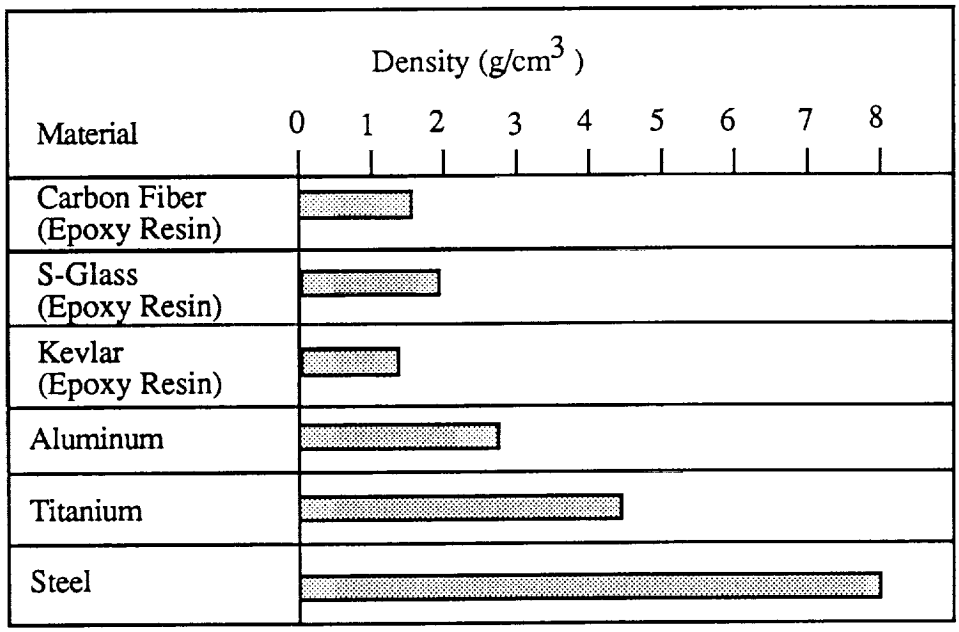

Figure 18. Comparison of material densities.

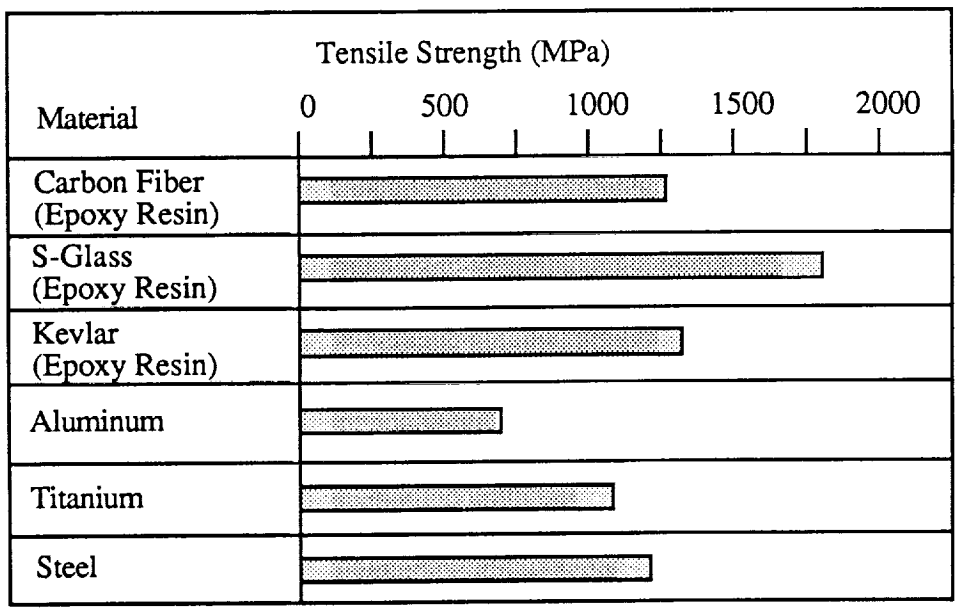

Figure 19. Comparison of material tensile strengths.

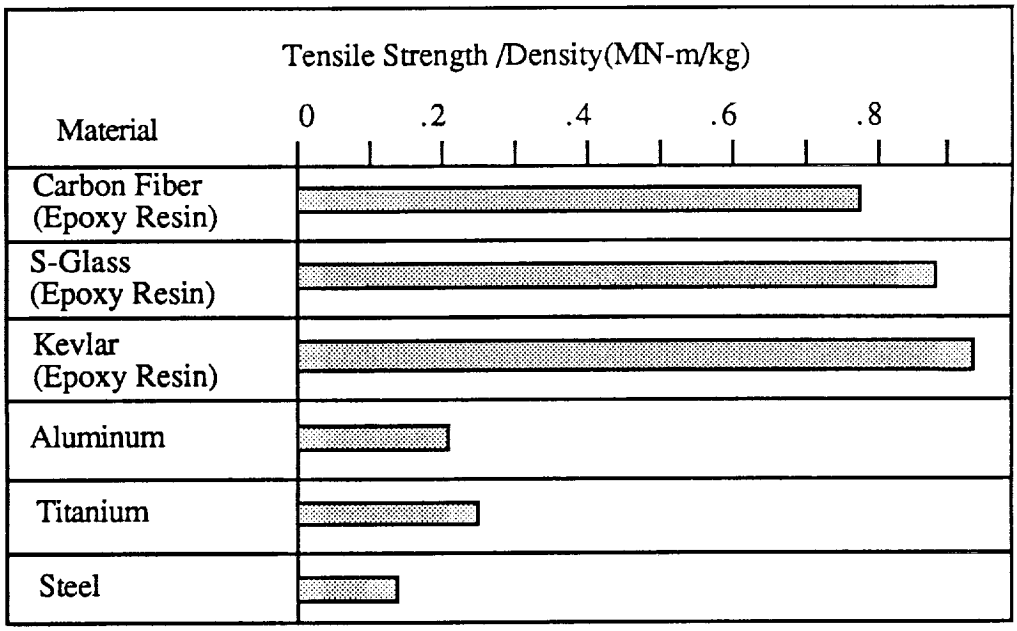

Figure 20. Comparison of material tensile strength-to-density ratios.

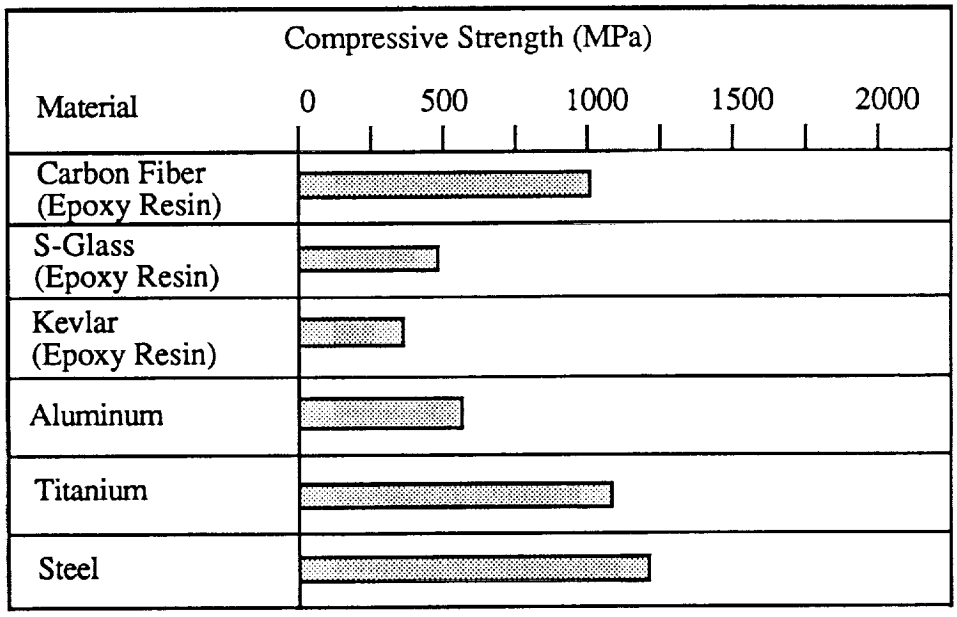

Figure 21. Comparison of material compressive strengths.

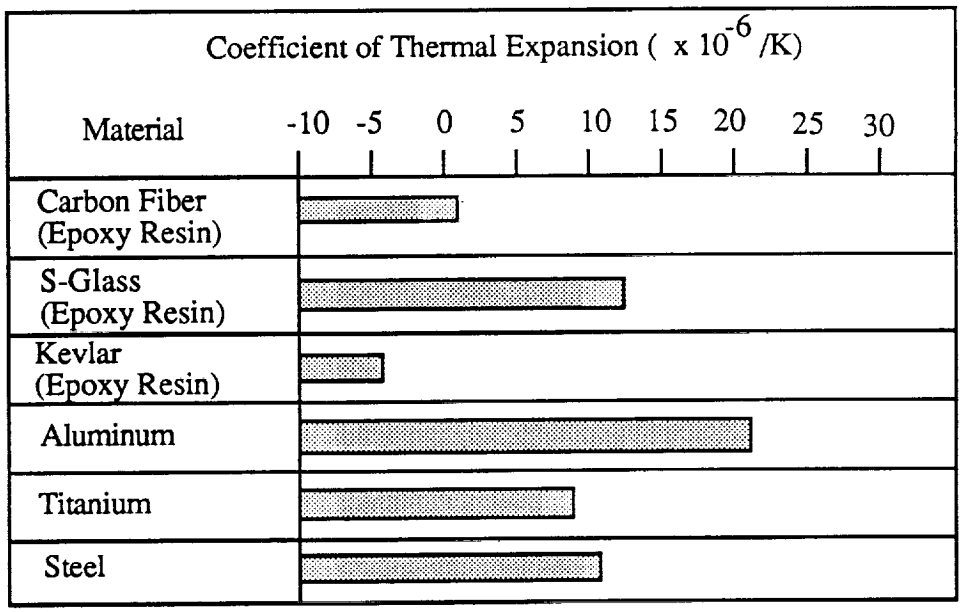

Figure 22. Comparison of material coefficient of thermal expansion.

FEASIBILITY STUDY

After completing the alternate designs, the team determined the feasibility of each alternate. Employing decision matrices allowed for comparison of the alternates in an organized and logical fashion. The decision matrices use the design criteria as a basis for comparing alternate designs. Appendix A contains the decision matrices for each of the alternate components and an explanation of the comparison method. Using the method of pairs, the team determined design consideration weighting factors by comparing each of the design considerations. After determining the weighting factors, the team rated each of the alternates according to how well the alternate fulfilled the design considerations. Qualitative as well as quantitative factors aided in the rating process. Table I-A in Appendix A shows the rating scale. Numerical rankings calculated from the weighting factors, and ratings for each alternate provided a basis for comparing the alternates.

Table I gives a summary of the decision matrix results. Fiber reinforced composites ranked the highest of the materials alternates. The composites provide the highest compressive strengths and strength-to-density ratios. The highest ranked vertical alternate was the truss system, shown in Figure 6. The truss system out ranked the other alternates by minimizing the number of hard points, minimizing post assembly size, and enhancing assemblability. In the horizontal support category, the expandable truss system, with higher assemblability, smaller pre-assembly size, and fewer members was the highest ranked.

Table I

Feasibility Study Results

Materials		Vertical Supports		Horizontal Supports	
Alternate	Rating	Alternate	Rating	Alternate	Rating
Aluminum Alloys	64.7	Independent Floors	44.73	Truss/Floor	53.37
Titanium Alloys	66.9	Suspension System	51.07	Box Girders	62.70
Fiber Reinforced Composites	85.0	Lunar Lander Supports	54.72	Beams	71.38
		Multi-level Support Columns	64.40	Trusses	73.39
		Arches	71.32	Expandable Truss	83.73
		Truss Systems	77.96		

DESIGN SOLUTIONS

After completing the feasibility studies for each alternate component, the team began creating design solutions. The support structure design solution includes expandable trusses for horizontal support, a truss system for vertical support, and pins, nuts and bolts, and welds for connecting the members. Properties of 7075 T73 aluminum served as a basis for structural design. The assembly method allows crews to construct the habitat without the use of EVA suits. This section explains the design solutions for each component and how the alternate components interact to form the completed support structure.

4.1 Preliminary Calculations

Before beginning the design of the support structures, the team performed various preliminary calculations. Included in these calculations were area calculations for each level, load calculations for each level, and size calculations for the piping and ventilation systems. The team based the area calculations on a 16 m diameter sphere with a 2 m diameter core. Subtracting 0.5 m from the diameter of each level allows clearance between the support member joints and the inflatable shell. Appendix B1 contains the results of the area calculations. After calculating the diameter of each level, the team determined maximum lengths and heights for the horizontal truss supports. The truss heights on each level depend on the truss length and spatial restrictions. To maximize available space within the habitat, the team assumed a minimum of 1.8 m (7 feet) between levels. From the spatial restrictions, the team determined the maximum truss heights per level. Appendix C6 contains truss length and height calculations.

After determining the truss heights, the team calculated ventilation duct sizes for each level. Required duct sizes decrease as the number of ducts increases. In order to determine the number of ducts required per level, the team assumed that all ducts must fit within the same space as the horizontal trusses. Calculating duct sizes for various combinations of branch and supply ducts allowed the team to determine the maximum duct sizes for each level. Because required pipe diameters are typically smaller than duct dimensions, the team used the largest duct dimensions for each level as worst-case dimensions. To fit all ventilation ducts within the same area as the trusses, the team used three supply ducts in the central core area and four branch ducts per level. Appendix B4 summarizes the ventilation calculations.

During the design process, the team focused on obtaining the most efficient truss to satisfy design requirements. Efficient trusses are trusses that minimize axial loads and support structural loads without buckling [19]. Load estimates, provided by NASA engineers, served as a basis for truss force calculations [1]. The largest estimated load served as the maximum load for the entire structure. In order to fulfill the design criteria, the team included a safety factor of four in the load estimates [2]. Appendix B2 contains a table of the load estimates for each level. To maximize truss system efficiency, there are several guidelines to follow. Minimizing the length and number of compression members reduces buckling possibilities and maximizing truss height reduces axial loads. There are trade-offs to consider in maximizing truss efficiency. For example, while increasing truss heights to reduce axial loads, designers lose available space within the structures [19]. In choosing the final design, the team considered the trade-offs and designed the truss to meet the required design criteria.

4.2 Horizontal Support Solution

After completing preliminary calculations, the team identified several horizontal support design considerations. Design considerations included supporting structural loads, limiting structure deflection, accommodating piping and ventilation systems, and satisfying spatial requirements. The first step in the horizontal support design was to calculate the loads on the eight radial members for each level. In order to calculate the forces on each member, the team divided each level into eight sections. Each radial member carries 1/8 of the total load on the level. From the area of each section and the force estimates per area, the team determined the distributed force along each radial member. Because the area of the sections increases as the distance from the core increases, the distributed loads are greatest at the perimeter of each section. Appendix C1 contains the force calculations. The calculations show that the distributed load on each member increases linearly as the distance from the central core increases. Level three supports the largest loads: 24.13 kN/m distributed load at the perimeter, and 731.2 kN on the entire level. The next step in the design was calculating the external reaction forces on the radial members. As expected, the team found that the reaction force at the point farthest from the core is the greatest. The reaction forces at the core and perimeter of level three are 30.04 kN and 61.30 kN, respectively. Appendix C2 contains calculations for the reaction forces.

The next step in the design process was to decide on a truss configuration. The two configurations considered were cross trusses and triangle trusses. Figure 23 gives an example of each truss configuration. Cross trusses have joints in the center and at the ends of the web members. The triangular trusses only have joints at the ends of the web members. Because the cross truss configuration adds joints, increasing the assembly time , the team chose the triangular truss configuration. An additional reason for choosing the

triangular trusses is the uncertainty of the behavior of the pin joints in the cross trusses. Modeling the pins as acting in pure shear may introduce error into the analysis.

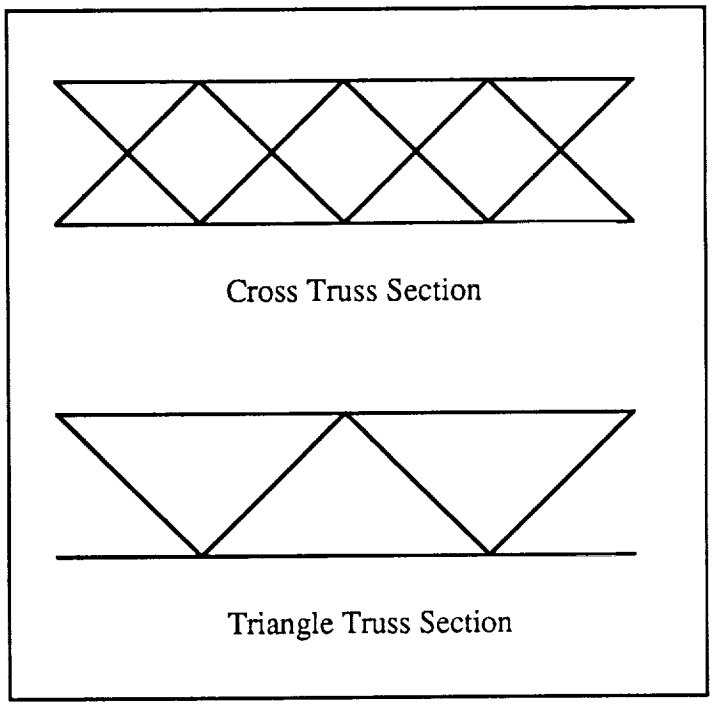

Figure 23. Cross truss and triangle truss sections.

Determining the applied loads and external forces acting on the radial members allowed the team to calculate the forces acting on each truss member. A finite element analysis program assisted in calculating the forces in each member. The input file included values for the applied loads, the number of truss members, material properties, and truss height. The program generated output for a truss fixed at both ends. Output included forces, displacements , and stresses per unit area on each truss member. The team used the maximum forces calculated from the program as a basis for designing the truss systems. Level three trusses contained the maximum tensile and compressive forces. The maximum

tensile force is 133 kN and the maximum compressive force is 111 kN. Appendix C3 gives a summary of the maximum forces for each level. Finite element computer data, provided to the sponsor in a separate report, shows forces for each truss member.

Performing force analysis on both compression and tension members allowed the team to calculate the minimum required truss member diameters. To calculate the required compressive truss member area, the team divided the largest compressive force in the system by the yield stress of 7075 T73 aluminum. Setting the result equal to the area of a hollow tube, and varying the outer diameter, allowed the team to determine possible inner and outer diameter combinations. Buckling analysis, using Euler's equations, showed that the minimum inner and outer diameters that support the critical load are 0.33 m and 0.0277 m, respectively. To allow for standard connections and packaging, the team chose to set the outer diameters of the compressive and tensile members equal. Failure analysis on a tension member with a 0.033 m outer diameter gives a minimum inner diameter of 0.0265 m to support the maximum tensile load. Appendix C4 contains the diameter calculations.

After analyzing the eight radial members of the expandable truss system, the team compared the feasibility of the arrangement to center connector arrangement shown in Figure 10. The feasibility study showed that the eight radial member arrangement provides several advantages over the center connector arrangement. Using eight radial members with cross trusses reduces the number of members to be connected, enhancing assemblability and lowering costs. The radial members support the same load as the center connector sections without increasing the required truss member size. Because of these advantages, the team chose the eight radial member configuration.

In addition to the eight radial members, cross members provide horizontal support on each level. Expandable cross trusses, located at the center and perimeter of each level, connect to the radial trusses to limit floor deflection. Material properties of the floor system

and deflection limitations dictate the number of cross members required. For this design, the team assumed an aluminum plate floor requiring only two cross members per section. Appendix C5 contains calculations of cross truss sizes.

4.3 Vertical Support Solution

Vertical supports consist of a truss system at the perimeter of each level, columns at levels one and two, and a central core transferring forces to the external supports. The team considered two perimeter truss system configurations. Triangular truss sections compose the first configuration. At the top four levels of the habitat, vertical sections connect to the horizontal sections to form triangles. In this design, the horizontal support members are staggered so that the vertical support triangular sections align. With this arrangement, the vertical supports transmit forces directly to the external supports. Figure 24 shows the configuration of the triangular trusses. Rectangular sections, rather than triangular truss sections, provide vertical support in the second configuration. Like the triangular truss configuration, the vertical supports connect to the horizontal supports. In this case, the trusses form rectangular sections rather than triangular sections. The horizontal support members align above each other to provide support for the rectangular sections. Figure 25 shows the rectangular truss configuration. In both the triangular and rectangular configurations, columns provide support for the lower two levels of the habitat. The columns, arranged in a circular pattern outside the habitat, connect directly to the external supports. Hard points on the inflatable shell allow the columns to support the first and second levels. Using columns to support the lower two levels eliminates the need for inefficient angled support members.

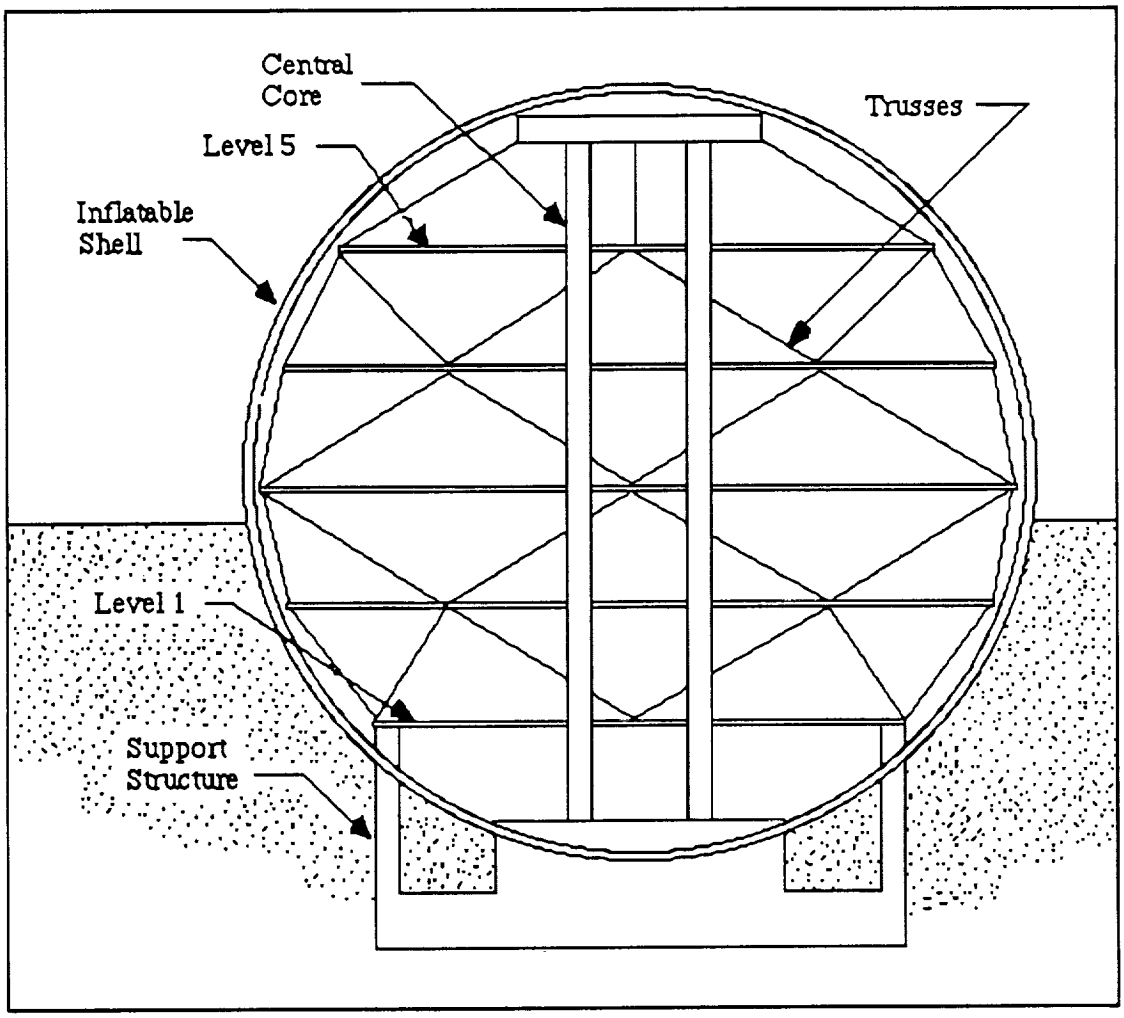

Figure 24. Triangular truss configuration.

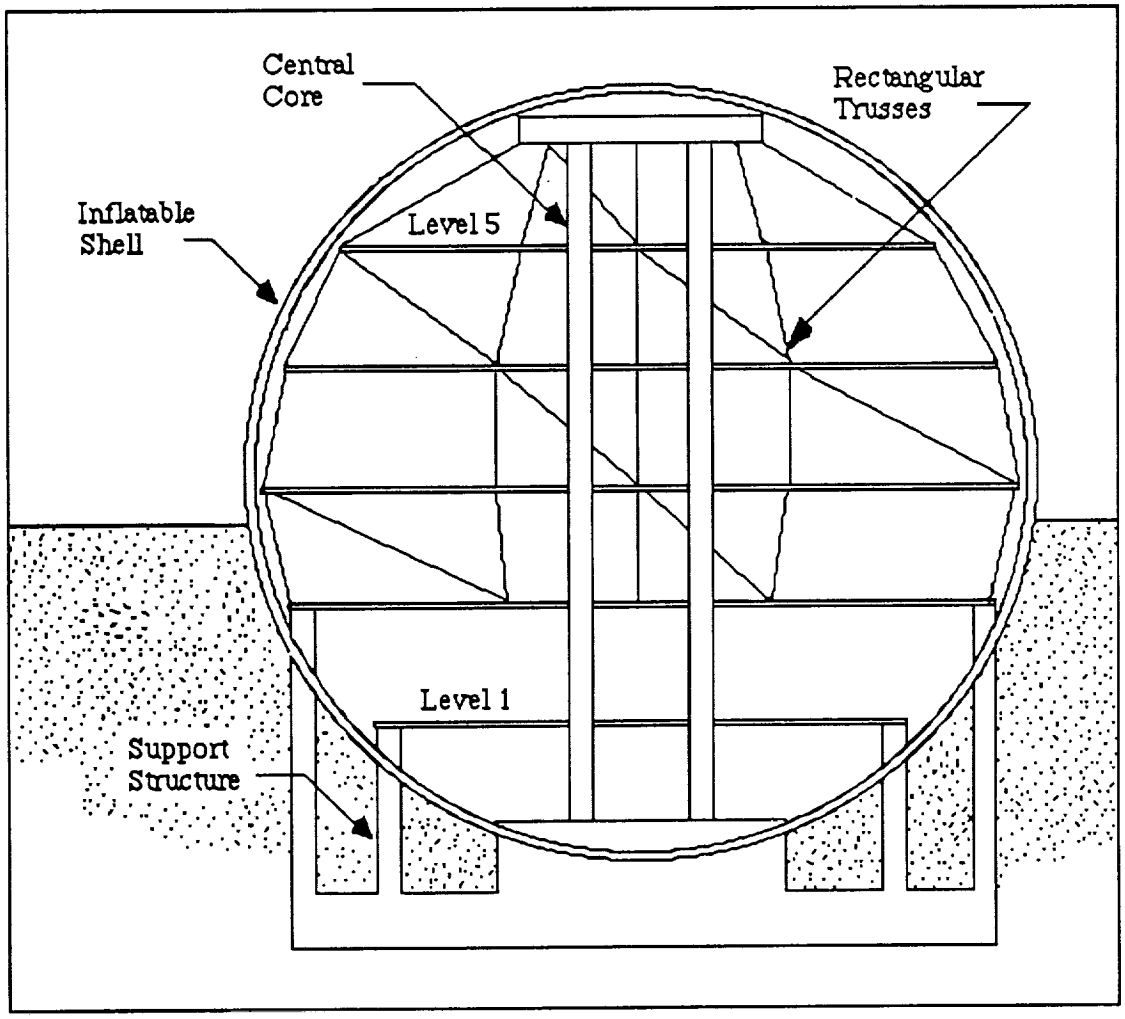

Figure 25. Rectangular truss configuration.

To compare the feasibility of the two configurations, the team considered eight triangular and eight rectangular sections for each level. The first step in the comparison was calculating the forces acting on the vertical supports. The reaction forces acting on the horizontal members are the same forces exerted on the vertical members. Appendix C2 contains the calculations for the reaction forces. Loads carried by the vertical members vary as the truss configuration varies. Because the triangular sections divide the loads

between two members, each member carries half the load that a rectangular section member carries. For this reason, the team compared two triangular section members to one rectangular section member. The calculations show that, to carry the same load, both members of the triangular section must be larger in diameter than one rectangular section member. After computing the truss member diameters for each configuration, the team calculated the masses of the sections. Triangular truss sections are three times more massive than rectangular truss sections carrying the same loads. The triangular sections are 0.076 m outer diameter and 12.875 kg per member. Rectangular sections carrying the same load are 0.069 m outer diameters and 8.112 kg per member. Appendix D1 contains the force and mass calculations. As the mass of each section increases, the transportation costs increase. In addition to the higher cost, the triangular truss configuration requires more members, increasing the number of connections and the assembly time. For these reasons, the team chose the rectangular perimeter truss configuration.

Calculations similar to those used for the horizontal supports allowed the team to determine the required perimeter truss member sizes. Setting the reaction force at each level equal to the critical load and performing buckling analysis gave the required areas for the perimeter truss support members. Loads supported by the vertical members increase as the distance from the top of the habitat increases. Because the lower levels support more weight, the members requiring the maximum diameter are the columns supporting the lower levels of the habitat. Buckling analysis, using Euler's equations, allowed the team to determine required column diameters. The analysis showed that levels one and two require the smallest and largest diameter columns, respectively. Level two column diameters are 0.0963 m and level one diameters are 0.032 m. In performing buckling analysis for the perimeter truss members, the team assumed that all truss members were in compression. In this case, the cables connecting the fifth level to the central columns support minimal tensile loads. In the event of a failure, these members support loads until structural repair

is complete. For this system, the outer diameters of the rectangular truss members range from 0.045 m to 0.065 m. Appendix D2 contains calculations and a summary of perimeter vertical support sizes.

At the center of the habitat, columns support the vertical loads. The columns, arranged in a circular pattern, transfer loads directly to the external support. Each radial truss of the horizontal support system connects to a column at the center. The team considered circular and I-beam sections for the central column support system. Moment and buckling analysis showed that required I-beam section sizes and masses are less than required circular section sizes and masses. Because of space limitations within the core, the team chose I-beam sections. Appendix D3 shows the comparative analysis.

4.4 Structural Connections Solutions

Structural connection solutions vary for each type of structural joint. To choose the connections for each joint, the team considered the advantages and disadvantages of each alternate connection for the particular loading application. The major joint locations are in the expandable trusses and between the expandable trusses and the vertical supports. Pins connect the expandable truss sections to each other; nuts, bolts and welds connect the expandable trusses to the central I-beams; and knuckle-type joints connect the expandable trusses to the vertical perimeter trusses. This section describes each of the connection solutions.

4.4.1 Horizontal Connections

Each triangular section of the horizontal expandable truss contains four pin joints to allow for collapse and expansion. Figure 26 shows the expansion and collapse of the truss sections. In order for the truss to collapse, the horizontal members fold vertically. Pin

joints in the members allow the bottom members to fold downward while the top members fold upward. Joints at the vertices of each triangular section allow the sections to collapse in toward the central core area. When the truss expands, sleeves over the joints in the horizontal compression members move along the member, away from the joint. Appendix G1 contains more detailed figures of the pin connections.

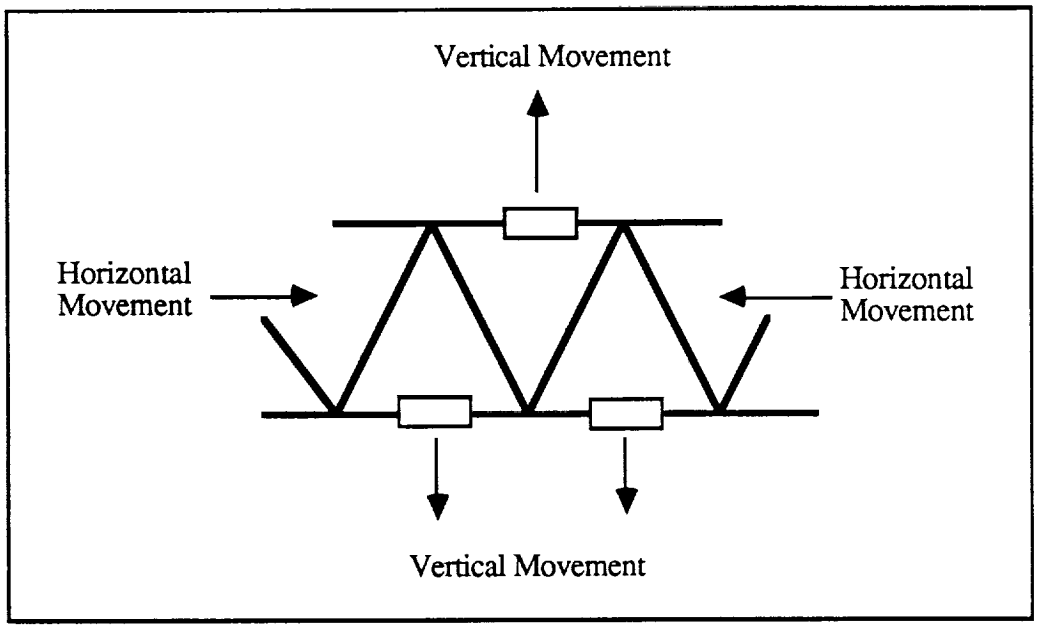

Figure 26. Motion of the expandable truss.

4.4.2 Vertical Connections

Each radial truss member connects to an I-beam in the central core area. A pin connects the lower truss member, closest to the beam, to a flange. Bolts connect the 90 degree flange to an I-beam. The last member at the top of the truss also connects to the I-beam. Bolts connect a plate, welded to the end of the truss member, to the I-beam. Figure 27 shows a possible configuration for the connections.

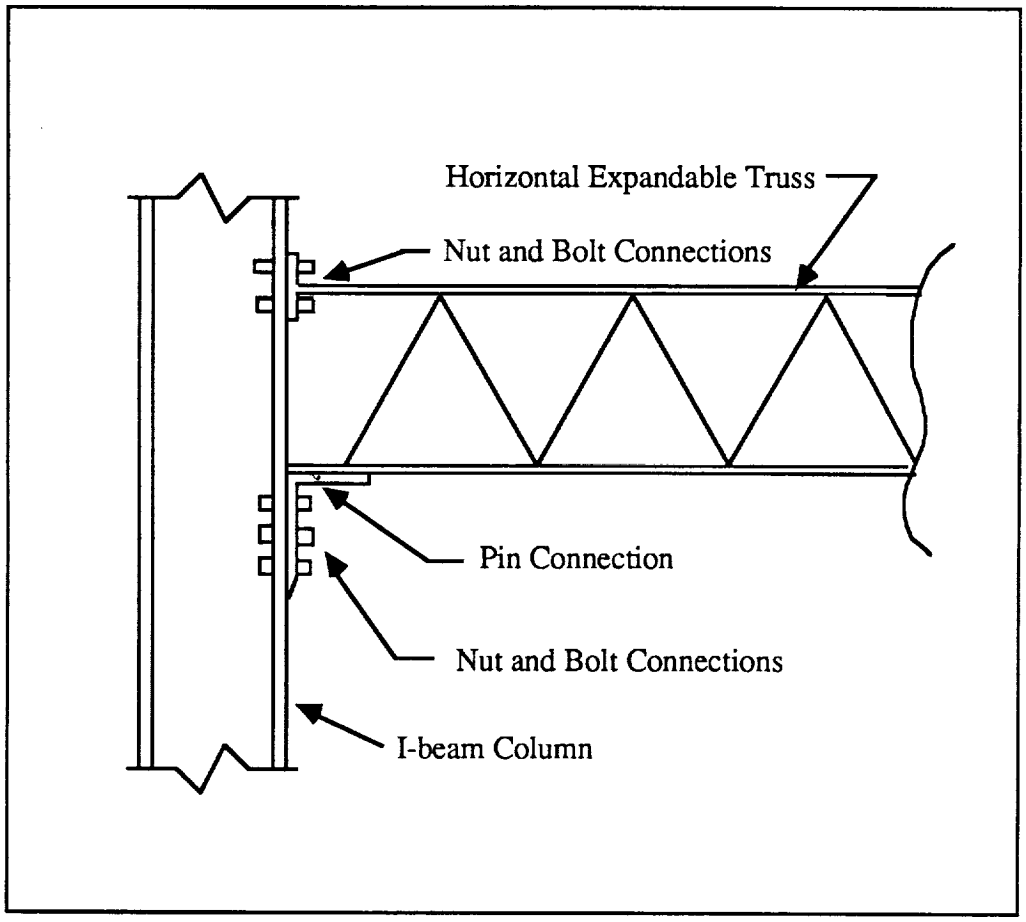

Figure 27. Connections from the horizontal trusses to the I-beams.

At the perimeter of each level, the vertical truss members connect to other vertical truss members and to the radial horizontal trusses. These connections rigidly attach the truss members in a branched geometry. Each joint consists of three metal tubes to join the members. The tubes connect together at various angles to support the vertical truss members. Appendix G1 contains vertical truss connection drawings.

4.5 Structural Support Mass Estimates

To provide a basis for future cost estimates, the team calculated the mass of the structural support system. Multiplying the density of 7075 T73 aluminum by the volume of each member allowed the team to estimate the mass of each member. Mass estimates for the horizontal supports included the radial truss members and the cross trusses. Vertical mass estimates include the external columns supporting levels one and two, the central core I-beams, and the perimeter truss members. Total mass estimates for the horizontal and vertical supports are 1,683 kg and 5,104 kg, respectively. Appendix E1 contains mass calculations for the horizontal and vertical support members of each level.

4.6 Assembly Method Solution

After completing the horizontal support, vertical support, and structural connection solutions, the team developed an assembly plan for constructing the structure. The primary considerations for the assembly plan were minimizing assembly time and maximizing safety. In developing the assembly plan, the team made several assumptions. First, the team assumed that cranes are available on the moon's surface for use in erecting the central core columns. The second assumption was that the shuttle will transport structural materials into space and interact with other vehicles to place the materials on the moon. In addition, the team assumed that the shuttle cargo bay dictates the size of all structural materials packaging. Finally, the team assumed that habitat construction will be completed by human power. In order for humans to assemble the habitat, the team assumed that walking on the inflated shell would not cause structural damage. Assembly of the structures involves several stages including pre-assembling parts, shipping, preparation

and arrival, and support structure assembly. This section discusses each stage of the assembly process. Appendix F1 contains schematics of various assembly steps.

4.6.1 Pre-assembly Stage

The first stage in the assembly process is pre-assembling parts. During this stage of the assembly, terrestrial crews assemble several components of the structure before packing the structural materials into the transportation vehicle. Expandable truss cross members from the horizontal supports connect the eight pre-assembled central columns rigidly together. The connected columns form a 15 m tall circular arrangement, 2 m in diameter. Eight radial members used for horizontal support connect rigidly to the central columns. Each of the radial members is an expandable truss, collapsed toward the central columns for shipping. Floor sections stack together between the collapsed trusses. To provide a foundation for crews to build the structure, a 4.5 m diameter platform attaches to the bottom of the central columns. A turnbuckle attaches to the top of the I-beams to aid in assembly of the top level of the habitat. Packed within the core of the inflatable structure are vertical support truss members, ladders for transportation between levels, structural connections, and equipment required for assembly. To minimize volume, the entire pre-assembled structure fits within the deflated habitat shell. Placing a protective covering tightly around the collapsed structure protects the inflatable shell from damage. After completion of pre-assembly, crews load the structure in the shuttle for transportation. Appendix F1 contains a schematic of the pre-assembled structure.

4.6.2 Preparation and Arrival Stage

Preparation and arrival is the second stage in the assembly process. When the inflatable structure arrives on the moon, cranes hold the central columns upright while

crews connect the columns, through hard points, to the external supports. After connection of the central columns is complete, connection of the second floor columns begins. These columns attach to the external foundation and contact the inflatable at hard points located on the second level. The next step in this stage is placing and connecting airlocks to the structure. Once the airlocks are connected to the structure, inflation of the habitat begins. When the habitat is fully inflated, excavation crews place the regolith radiation shielding over structure. Air pressure inside the habitat allows crew members to work without the protection of the EVA suits. Because crews work without the suits, their mobility is not inhibited and assembly time is minimized. A rope ladder, connected to the airlock, extends down to the pre-assembled platform allowing crew members to descend to the first level. Once the crew members reach the bottom of the structure, unpacking of the structural materials begins.

4.6.3 Support Structure Assembly Stage

The third stage is support structure assembly. Assembly equipment packed within the central core includes a lifting mechanism. Wheels provide horizontal movement for the mechanism, while a scissor system provides vertical movement. During assembly, crew members may stand on a platform mounted atop the lifting mechanism. Figure 28 shows the lifting mechanism. To assemble the support structures, crews first expand the horizontal truss members, as described in section 4.4.1. Construction of the first and second levels of the habitat follows the same procedure. Beginning on the first level, crews expand and lock the radial trusses, connecting each to the vertical support columns upon expansion. Expansion and connection of the cross trusses follows connection of the vertical supports. Construction of the third and fourth levels follows a slightly different procedure. Like construction of the first two levels, construction of these levels involves expanding the horizontal trusses. Again, cross trusses are placed at the perimeter of each

level and at various distances from the central columns. In the case of levels three and four, horizontal trusses expand and connect to vertical truss members. Construction of the fifth floor of the habitat proceeds in the same fashion, with crews expanding the horizontal trusses and connecting them to the vertical supports on the fourth level. The supports connecting to the top of the central columns are cables rather than truss members. A turnbuckle, installed at the top of the central core arrangement, tightens the cables until they support minimal load. In the event of failure, the cables support additional loads to prevent catastrophic failure until repair on the structure is complete.

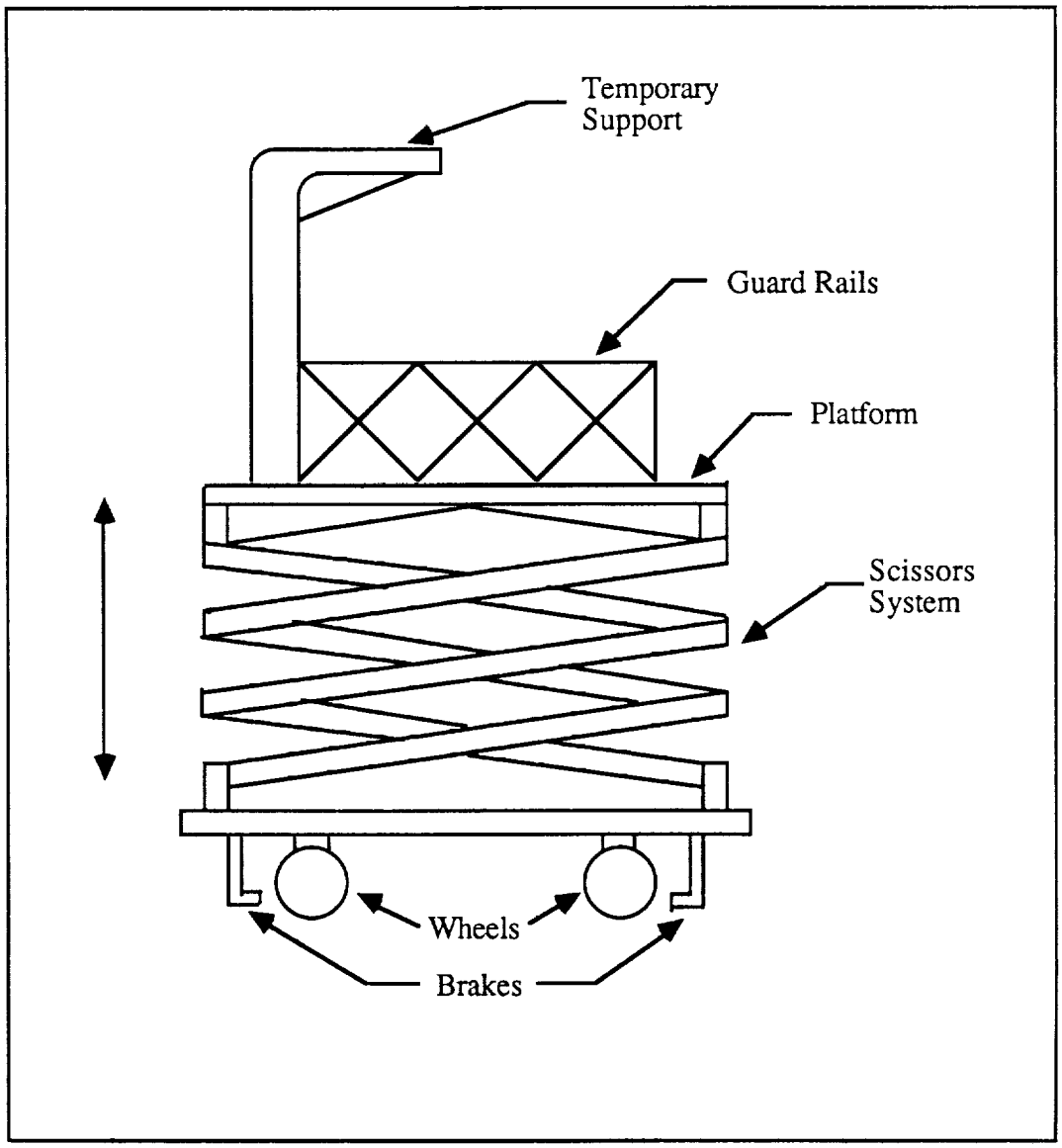

Figure 28. Lifting mechanism for assembly.

4.7 Materials Solution

From the feasibility study, the team concluded that the most feasible material alternate was carbon fiber reinforced epoxy (CFRE). CFRE exhibits the highest overall

strength of all fiber reinforced polymers [9]. The tensile strength of CFRE is higher than either aluminum or titanium. In addition to the higher strengths, CFRE has a lower density and lower coefficient of thermal expansion than the metal alternates. Although the CFRE has a lower compressive strength than the titanium, the advantages in density and tensile strength-to-density led the team to rank CFRE over titanium.

Use of fiber reinforced polymers, particularly CFRE, for structural purposes is still in the experimental stages. Because CFRE is not widely used in structural applications, the team decided to base all structural calculations on one of the metal alternates. The decision matrix shows that the team ranked the two metals alternates closely. In order to choose between the metals, the team reconsidered the advantages and disadvantages of each metal. Two conditions led the team to choose aluminum over titanium. First, titanium has a lower wear resistance than aluminum. In order to use titanium in structural application, the material must be coated with a wear resistant material, such as Teflon. Coating the titanium with Teflon increases the manufacturing costs of the material. Second, aluminum is widely used in space applications. Because aluminum is currently used in space vehicles and structures, the material has been proven to work in space.

After choosing aluminum as the most feasible material for design, the team chose a specific aluminum for use. The two most commonly used aluminums in structural applications are 2219 and 7075. Because the densities of the two aluminums are the same, the deciding criterion was strength. Based on the strength criterion, the team chose 7075. Caution should be used in applications where 7075 aluminum undergoes either residual or applied, sustained tensile stresses. The stresses on the aluminum weaken the material and may cause failure. In these cases, T73 tempers should be considered [18]. Although the tensile strength of the T73 tempered material is lower than other tempers, the team chose the temper because of the reduced risk of failure. The team based all calculations for the

structural supports on the properties of the 7075 T73 aluminum. Table II gives the properties of the material.

Table II

Properties of Aluminum 7075 T73

Density	$2.80\ Mg/m^3$ at 20 degrees Celsius	
Coefficient of Thermal Expansion	$24.3 \times 10^{-6}\ m/m \cdot K$ average for temperature ranges 20-200 degrees Celsius	
Tensile Strength	503 MPa	
Yield Strength	434 MPa	
Modulus of Elasticity	Tension	71.0 GPa
	Compression	72.4 GPa
	Shear	26.9 GPa

CONCLUSIONS AND RECOMMENDATIONS

During the design process, the team considered several support structure configurations. Included in the vertical alternates were arches, lunar lander supports, a suspension system, a truss system, and columns. Horizontal alternates included beams, trusses, expandable trusses, floor/truss systems, and box girders. After performing feasibility studies on each alternate, the team concluded that the truss system and expandable trusses were the most feasible candidates for conceptual design. The truss systems allowed the team to meet, or exceed, the design criteria identified in the initial stages of the design. Trusses minimize the mass of the structure, limit floor deflections, and accommodate piping and ventilation systems. Designing the systems with expandable trusses and locking pin connections allowed the team to limit assembly time by reducing the complexity and number of connections.

Although the design solution meets the initial design requirements, the team recommends further research in several areas. Use of fiber reinforced polymers for structural support may allow future designers to decrease the mass of the structure. The high strength of the polymer composites may also allow for smaller support members. If smaller members can be used to support the same load, the polymer composites may provide enough space for members to support the weight of the radiation shielding regolith.

Another area that deserves further consideration is the possibility of automated assembly. Although the team designed the connections for limiting assembly time, automation may further reduce the time. Future designers may employ robotics or mechanized expandable trusses. If designers chose to research robotics, the assembly methods should be tested for influences of lower than earth gravity. Also, if robotics were

employed for assembly, concerns about radiation and atmospheric effects during assembly would not be a concern to humans.

Research into the behavior of pin joints and the expandable truss systems should also be conducted. The pin joints with protective sleeves should be researched further. Future designers may consider milling grooves or notches into the joints to lock the truss members in place. Also, modeling the system with fixed connections, rather than pin joints, between the truss members. Designing the joints as fixed connections may increase the strength and decrease the deflection of the horizontal support members.

Possibilities of adapting the habitat to various geometries and environments should be considered in future designs. Other geometries to consider include horizontal and vertical cylindrical habitats. Adapting the structure to various environments requires research of atmospheric conditions and radiation. For example, to adapt the structure to the Martian environment, designers must consider dynamic wind loads.

Finally, the team recommends building a mock-up of the entire assembly. During construction of the mock-up, various assembly methods can be tested. The structure can then be tested under static and dynamic loading conditions. Construction of the structure also serves as a demonstration of spatial and equipment layout concept feasibility.

REFERENCES

1. Cerimele, Mary P., and Kennedy, Kriss J., "Habitation and Human Systems for the 90 Day Study-The Human Exploration of Moon and Mars", (1990) report prepared during 90 day study, Report Number JSC-24398 NASA/Johnson Space Center.

2. Yin, Paul K., Ph.D., P.E. "A Preliminary Design of Interior Structure and Foundation of an Inflatable Lunar Habitat", paper submitted to SPACE 90, the second International Conference on Engineering, Construction, and Operations in Space, (American Society of Civil Engineers, New York, N.Y., 1989).

3. Kennedy, Kriss J., and Roberts, Mike L., (1990). Advanced Systems Definition Branch-Systems Engineering Division, NASA, Johnson Space Center, Building 32, Room 228.

4. Guest, J.E., and Greeley, R., Geology on the Moon, (Wykeham Publications Ltd., London and Basingstoke, 1990).

5. Connell, Richard B., Fieber, Joseph P., Paruleski, Kerry L., Torres, Hernan D., "Design of an Inflatable Habitat for NASA's Proposed Lunar Base", (1990) report prepared for University Space Research Association.

6. Banks, Joel ., Keyanonsh, Efatpenah ., Sines, Jeffrey L., "Conceptual Design and Analysis of Roads and Road Construction Machinery for Initial Lunar Base Operations", (1990) report prepared for NASA Kennedy Space Center and USRA.

7. Budinski, Kenneth G., Engineering Materials Properties and Selection, (Prentice Hall, Inc., New Jersey, 1985).

8. Advanced Materials and Processes, Vol. 137 , (ASM Publication,1990).

9. ASM International, Engineered Materials Handbook volume 1--Composites, (ASM International Handbook Committee, Metals Park, Ohio, 1987).

10. Mallick, P.K., Fiber-Reinforced Composites, Materials, Manufacturing, and Design, (Marcel Dekker, Inc., New York, 1988).

11. Gordon, J.E., Structures or Why Things Don't Fall Down, (Da Capo Press, Inc., New York, 1978).

12. Davanay, Lisa., Garner, Brian., Rigol, Jason., "Design of an Unmanned Lunar Cargo Lander that Reconfigures into a Shelter for a Habitation Module or Disassembles into Parts Useful to a Permanent Manned Lunar Base", (1989) report prepared for NASA, Kennedy Space Center.

13. Beard, Richard R., Walt Disney's EPCOT Center, (Harry M. Abrams,Inc., New York, 1989).

14. Dr. Paul Nowak, Civil Engineering Faculty, Colorado State University.

15. McCrum, N.G., Buckley, C.P., Bucknall, C.B. Principles of Polymer Engineering, (Oxford University Press, New York, 1989).

16. Narayanan, R., ed., Structural Connections--Stability and Strength (Elsevier Science Publishers, Ltd, 1989).

17. Blake, Alexander, Design of Mechanical Joints, (Marcel Dekker, Inc., New York, 1985).

18. Metals Handbook, 9th ed., vol. 2, (American Society for Metals, Metals Park, Ohio, 1986).

19. Melaragno, Mechele, Simplified Truss Design, (Van Nostrand Reinhold Company, 1981).

20. Gere, James M., and Timoshenko, Stephen P., Mechanics of Materials, (PWS Publishers, Boston, Massachusetts, 1984).

APPENDIX A

DECISION MATRIX METHOD

Decision matrices aided the team in selecting the most feasible candidates for conceptual design. The first step the team completed in using the decision matrices was identifying the design parameters. Each alternate component has different design parameters, as indicated in the decision matrices. After identifying the design parameters, the team assigned weighting factors to each parameter. A method of pairs allowed the team to complete this task. During the method of pairs, the team compared two parameters and assigned a tally mark to the parameter considered more important. This process continued until all parameters had been compared. Upon completion of the comparison, tally marks for each parameter were summed and divided by the total number of tally marks. The result of this calculation is the weighting factor for the parameter. After determining the weighting factors, the team rated each alternate according to the scale shown in Table I-A. To determine the rank of each alternate, the team multiplied the rating by the weighting factor for each parameter and summed the products. For example, the design parameters for the vertical supports include assemblability, size (pre-assembly), size (post-assembly), adaptability, number of members, number of hard points, and structural independence. The weighting factor for assemblability is 0.138. For the same parameter, the lunar lander support alternate rating is 15. Multiplying these numbers gave the rank of the lunar lander supports for assemblability, 2.07. Summing the lunar lander rankings for each parameter gave the overall rating for the alternate, 54.72.

Table I-A

Rating Scale for Decision Matrices

Rating	Description
100	Satisfies all design criteria
90	Satisfies most design criteria
80	Satisfies emphasized design criteria
70	Satisfies most emphasized design criteria
60	Satisfies some emphasized / all secondary
50	Acceptable
40	Satisfies some emphasized / most secondary
30	Satisfies only secondary design criteria
20	Satisfies most secondary design criterion
10	Unacceptable

MATERIALS	DESIGN PARAMETERS							
DESIGN CONSIDERATIONS → / WEIGHTING FACTORS → ↓	DENSITY	STRENGTH TO DENSITY	THERMAL COEFF. EXPAN.	MACHIN-ABILITY	FORM-ABILITY	COMPRESS STRENGTH	COST	SUM OF PRODUCTS
	0.0714	0.214	0.107	0.143	0.179	0.250	0.0357	1.0
ALUMINUM ALLOYS	70 / 45	50 / 10.7	50 / 5.4	60 / 8.6	80 / 14.3	70 / 17.5	90 / 3.2	64.7
TITANIUM ALLOYS	50 / 3.6	50 / 10.7	70 / 7.5	50 / 7.2	80 / 14.3	90 / 22.5	30 / 1.1	66.9
FIBER REINFORCED COMPOSITES	90 / 6.4	90 / 19.3	90 / 9.6	70 / 10	90 / 16.1	90 / 22.5	30 / 1.1	85.0

VERTICAL SUPPORT	DESIGN PARAMETERS							
DESIGN CONSIDERATIONS → / WEIGHTING FACTORS → ↓	ASSEMBL-ABILITY	SIZE PRE-ASSEMBLY	SIZE POST ASSEMBLY	ADAPT-ABILITY	NUMBER OF MEMBERS	NUMBER OF HARD POINTS	STRUCT. INDEPEN-DENCE	SUM OF PRODUCTS
	0.138	0.138	0.067	0.345	0.207	0.276	0.138	1.0
LUNAR LANDER SUPPORTS	15 / 2.07	90 / 12.42	70 / 4.69	30 / 1.04	40 / 8.28	60 / 16.56	70 / 9.66	54.72
SUSPENSION SYSTEM	20 / 2.76	30 / 4.14	80 / 5.36	25 / 0.86	50 / 10.35	90 / 24.84	20 / 2.76	51.07
INDEPENDENT FLOORS	10 / 1.38	20 / 2.76	60 / 4.02	40 / 1.38	30 / 6.21	60 / 16.56	90 / 12.42	44.73
ARCHES	80 / 11.04	70 / 9.66	50 / 3.35	90 / 3.11	70 / 14.49	80 / 22.08	55 / 7.59	71.32
MULTI-LEVEL SUPPORT COLUMNS	60 / 8.28	60 / 8.28	65 / 4.36	50 / 1.73	55 / 11.39	70 / 19.32	80 / 11.04	64.40
TRUSS SYSTEM	90 / 12.42	80 / 11.04	90 / 6.03	85 / 2.43	60 / 12.42	90 / 24.84	60 / 8.28	77.96

HORIZONTAL	DESIGN PARAMETERS						
DESIGN CONSIDERATIONS → / WEIGHTING FACTORS → ↓	ASSEBL-ABILITY	ADAPT-ABILITY	SIZE PRE-ASSEMBLY	SIZE POST ASSEMBLY	NUMBER OF MEMBERS		SUM OF PRODUCTS
	0.200	0.0667	0.267	0.200	0.267		1.0
BEAMS	70 / 14	20 / 1.33	80 / 21.36	80 / 16	70 / 18.69		71.38
FLOOR / TRUSS SYSTEM	60 / 12	50 / 3.34	40 / 10.68	70 / 14	50 / 13.35		53.37
EXPANDABLE TRUSSES	90 / 18	75 / 5.00	90 / 24.03	70 / 14	85 / 22.70		83.73
TRUSSES	80 / 16	70 / 4.67	75 / 20.03	70 / 14	70 / 18.69		73.39
BOX GIRDERS	70 / 14	60 / 4.00	50 / 13.35	90 / 18	50 / 13.35		62.70

APPENDIX B1

AREA CALCULATIONS FOR EACH LEVEL

TO CALCULATE THE AREA OF EACH LEVEL, THE TEAM CONSTRUCTED A SCALE DRAWING OF A 16 METER SPHERE. FROM THE DRAWING, THE TEAM MEASURED THE DIAMETER OF EACH LEVEL. THE RESULTS ARE AS FOLLOWS:

LEVEL	DIAMETER	AREA = $\frac{\pi D^2}{4}$
1	11 m	95 m^2
2	14.6 m	167.4 m^2
3	15.9 m	198.6 m^2
4	15.4 m	186.3 m^2
5	12.9 m	130.7 m^2

AREA OF 2 m DIAMETER CORE = $\frac{\pi D^2}{4} = \frac{\pi (2)^2}{4}$

$A_c = 3.14 m$

CLEARANCE SPACE BETWEEN HORIZONTAL SUPPORTS AND INFLATABLE SHELL = 0.5 m

TO CALCULATE THE ACTUAL FLOOR AREA PER LEVEL, SUBTRACT THE CORE AREA AND THE CLEARANCE SPACE. THE RESULTS ARE AS FOLLOWS:

LEVEL	AREA (m^2)
1	83.5
2	153.0
3	183.2
4	171.3
5	117.7

APPENDIX B2

FORCE ESTIMATES FOR EACH LEVEL

Table I-B shown below gives force estimates for each level of the habitat as given in NASA's 90-Day Study [1]. The team assumed worst-case loading of 125 psf for each level. Table II-B shows the distributed loads the team calculated for each level.

Table I-B

Load Estimates For Each Level [1]

Level	Earth Load (psf)	Earth Load (lbs)	Moon Load (lbs)	Moon Load (kn)	With SF=4 (kn)
1	50 -60	55,500	9,250	41	164
2	40 -125	170,100	28,350	126	504
3	60 -125	187,700	31,283	139	556
4	60 -125	194,800	32,467	144	576
5	50 -100	136,000	22,667	101	404
All		744,100	124,017	552	2208
Roof	Regolith Shielding		77,344	344	1376

Table II-B

Load Estimates Per Level

Level	Force moon load (kN)	Force moon load (kN) inluding safety factor of 4
1	83.3	333.2
2	152.6	611.2
3	182.8	731.2
4	170.9	683.6
5	117.4	469.7

APPENDIX B3

CALCULATION TO DETERMINE NUMBER OF RADIAL MEMBERS

FOR WORST CASE LOADING, PRESSURE ON EACH FLOOR IS 125 lb/ft² = 998 N/m².

ADDING A SAFETY FACTOR OF 4 GIVES 3991 N/m².

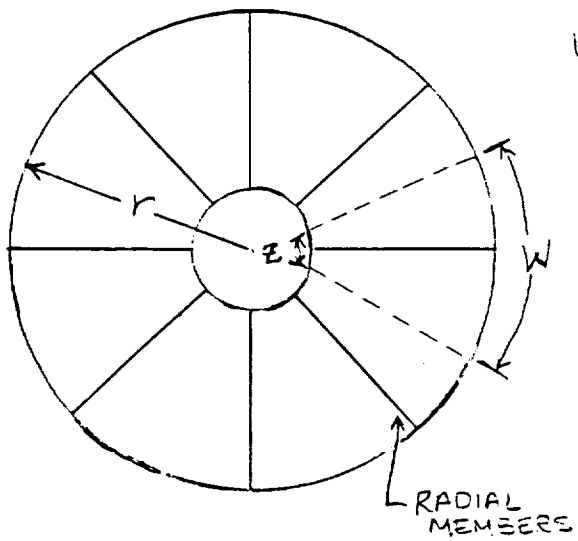

USE LEVEL 3 AS AN EXAMPLE:

$r = 7.7$

$R = 8$

$z = \frac{2\pi(1)}{8} = 0.79$

$W = \frac{2\pi(7.7)}{8} = 6.05$

R = # OF RADIAL MEMBERS	$z = \frac{2\pi(1)}{R}$	$W = \frac{2\pi(7.7)}{R}$	LOAD AT INNER SURFACE z × PRESSURE (kN/m)	LOAD AT OUTER SURFACE W × PRESSURE (kN/m)
6	1.05	8.06	4.19	32.2
7	0.9	6.91	3.59	27.6
8	0.79	6.05	3.15	24.1
9	0.698	5.35	2.75	21.5
10	0.63	4.84	2.51	19.3

APPENDIX B4

VENTILATION CALCULATIONS

FROM THE NASA 90-DAY STUDY, THE VOLUME FOR EACH LEVEL IS;

$$V_i = \pi \left[r_s^2 z_i - \frac{z_i^3}{3} \right] \qquad [1]$$

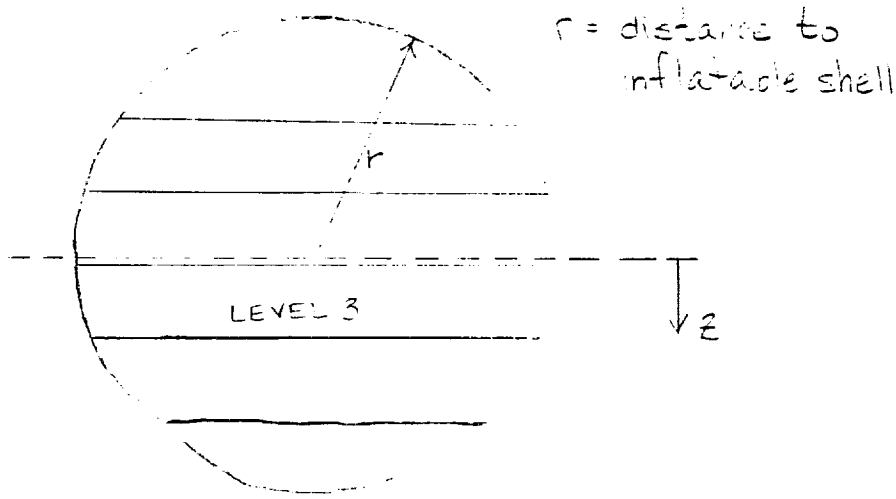

USE LEVEL 3 AS AN EXAMPLE

$$V_3 = \pi \left[(8m)^2 (0.5m) - \frac{(0.5)^3}{3} \right] + \pi \left[(8m)^2 (2.1m) - \frac{(2.1m)^3}{3} \right]$$

$$V_3 = 512.9 m^3$$

TO CALCULATE THE REPRESENTATIVE AREA FOR EACH LEVEL DIVIDE BY THE HEIGHTS,

$$A_3 = \frac{V_3}{h_3} = \frac{512.9\ m^3}{(2.6\ m)} = 197.3\ m^2$$

ASSUMING A REQUIRED FLOW RATES OF
7.62 m/s = 25 ft/s FOR THE MAJOR DUCTS [1,21]
6.10 m/s = 20 ft/s FOR THE BRANCH DUCTS

THE REQUIRED FLOW RATES FOR EACH LEVEL CAN BE CALCULATED

LEVEL 3 : $\dot{V}_3 = A_3 \cdot \frac{\dot{V}_3}{A_3}$ ASSUME $\frac{\dot{V}_3}{A_3} = 0.005\ \frac{m^3/s}{m^2}$

$$= (197.3\ m^2)(0.005\ m^3/s\ m^2)$$

$$\dot{V}_3 = 1.00528\ m^3/s$$

TO CALCULATE THE SUPPLY DUCT SIZES REQUIRED, ADD THE FLOW RATES FOR EACH LEVEL TO BE SUPPLIED AND DIVIDE BY THE VELOCITY.

FOR LEVEL 3,

FROM LEVEL 2 TO LEVEL 3, $\dot{V} = \dot{V}_3 + \dot{V}_1 + \dot{V}_5$

$$\dot{V} = 2.3754 \ m^3/s$$

ASSUMING THREE SUPPLY DUCTS, THE RATE IN EACH DUCT IS:

$$\dot{V} = \frac{2.3754 \ m^3/s}{3} = 0.7918 \ m^3/s \text{ PER DUCT}$$

$$A = \frac{\dot{V}}{V} = \frac{0.7918 \ m^3/s}{7.62 \ m/s} = 0.10391 \ m^2$$

FOR A SQUARE DUCT, THE SIZE REQUIRED IS 0.32 m x 0.32 m.

TO CALCULATE THE PRESSURE RING SIZES REQUIRED FOR SUPPLYING THE DUCTS ON EACH LEVEL, DIVIDE THE FLOW RATE BY THE VELOCITY.

FOR LEVEL 3, $\frac{\dot{V}}{V} = \frac{1.00228 \ m^3/s}{7.62 \ m/s}$

PRESSURE RING SIZE IS 0.36m x 0.36m.

TO CALCULATE SIZES OF BRANCH DUCTS, DIVIDE THE FLOW RATE PER FLOOR BY THE NUMBER OF DUCTS, THEN DIVIDE BY THE VELOCITY

ASSUME 4 SUPPLY DUCTS PER LEVEL.

FOR LEVEL 3,

$$\dot{V}_3 = \frac{1.00228\ m^3/s}{4\ \text{ducts}} = 0.25057\ m^3/s$$

$$A_3 = \frac{\dot{V}_3}{V} = \frac{0.25057\ m^3/s}{6.1\ m/s} = 0.04108\ m^2$$

REQUIRED SUPPLY DUCT SIZE IS 0.2 m × 0.2 m.

A SUMMARY OF THE VOLUMES, AREAS, VOLUME FLOW RATES, SUPPLY DUCT SIZES, PRESSURE RING SIZES, AND BRANCH DUCT SIZES IS PROVIDED IN THE TABLE ON THE FOLLOWING PAGE.

SUMMARY OF VENTILATION CALCULATIONS

LEVEL	VOLUME (m^3)	AREA (m^2)	VOLUME FLOW RATE (m^3/s)	SUPPLY DUCT SIZE (m×m)	PRESSURE RING SIZE (m×m)	BRANCH DUCT SIZE (m×m)
1	360	138.5	0.70358	L0-L1 0.42×0.42	0.3×0.3	0.17×0.17
2	491.7	189.1	0.86063	L1-L2 0.38×0.38	0.35×0.35	0.2×0.2
3	512.9	197.3	1.00228	L2-L3 0.32×0.32	0.36×0.36	0.2×0.2
4	423.8	163	0.83804	L3-L4 0.25×0.25	0.33×0.33	0.18×0.18
5	236	107.3	0.5408	L4-L5 0.15×0.15	0.27×0.27	0.15×0.15
0	120.2	78.4	0.39827			

APPENDIX C1

DISTRIBUTED LOAD CALCULATIONS

ASSUMING WORST CASE LOADING:

SO PRESSURE ON EACH LEVEL IS
$125\ lb/ft^2 = 998\ N/m^2$

WITH A SAFETY FACTOR OF 4, THE PRESSURE PER LEVEL IS

$$(998\ N/m^2)(4) = 3991\ N/m^2.$$

TO CALCULATE THE DISTRIBUTED LOAD PER LEVEL, FIRST FIND THE AREA.

EXAMPLE: USE LEVEL 3

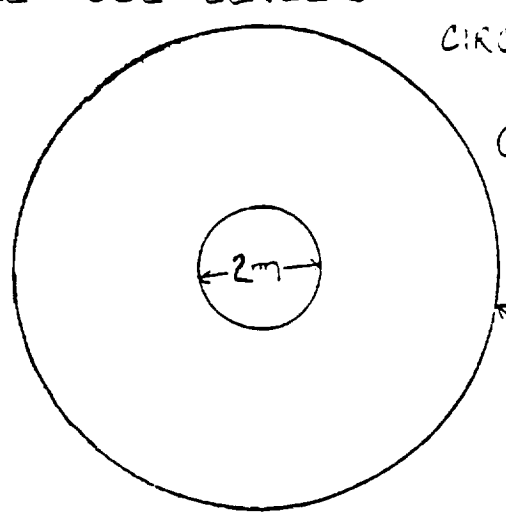

CIRCUMFERENCE = $2\pi R$
$= (2)(\pi)(7.7m)$
$C = 48.38m$

DISTRIBUTED LOADING

FORCE ON OUTER RING:

$$F = C \times \text{PRESSURE}$$
$$= (48.38\,m)(3991\ N/m^2)$$
$$F = 193.1\ kN/m$$

FORCE ON INNER RING:

$$F = C_i \times \text{PRESSURE}$$
$$= (2\pi)(1m)(3991\ N/m^2)$$
$$F = 25.1\ kN/m$$

∴ DISTRIBUTED LOAD FOR THE LEVEL

ASSUME LINEAR DISTRIBUTION

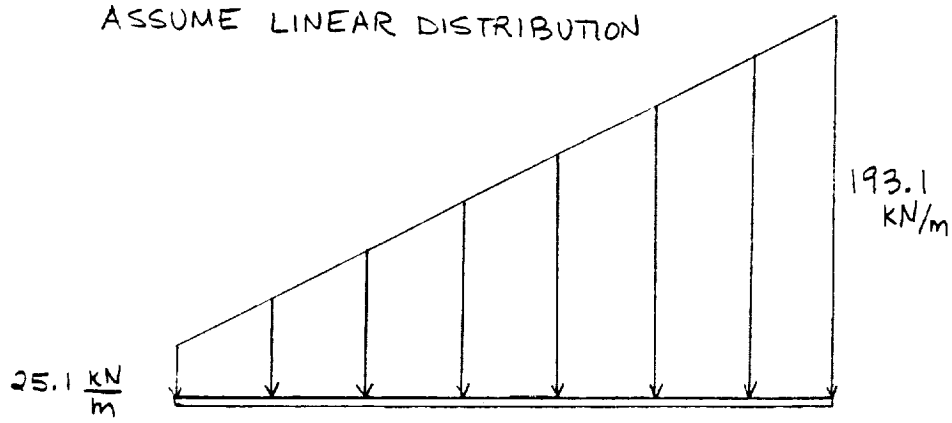

TO FIND THE DISTRIBUTED LOAD PER RADIAL MEMBER, DIVIDE THE LEVEL INTO 8 SECTIONS.

FORCE ON INNER END:

$$F = \frac{25.1\ KN/m}{8} = 3.14\ KN/m$$

FORCE ON OUTER END:

$$F = \frac{193.1\ KN/m}{8} = 24.1\ KN/m$$

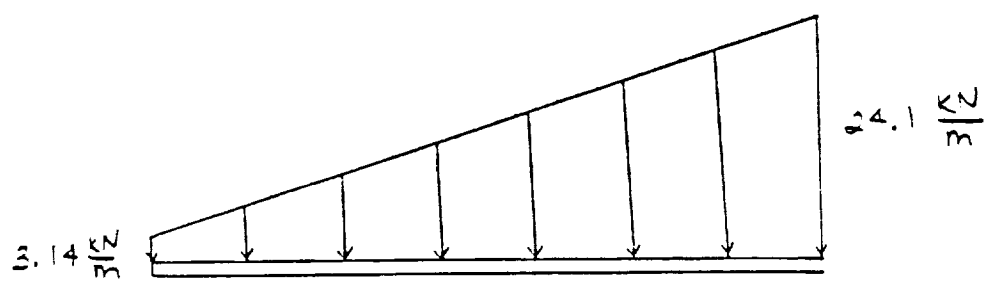

CHECK TO SEE IF THE LOADS ADD TO THE TOTAL LOAD CALCULATED FOR EACH FLOOR (SEE APPENDIX B2)

LOAD ON LEVEL 3 = 731.2 KN (SEE APPENDIX A)

CHECK (CONTINUED)

AREA OF TRAPEZOID = (AVERAGE HEIGHT)(BASE)

$$= \left[\frac{25.1 + 193.1}{2} \frac{kN}{m}\right][6.7m]$$

TOTAL FORCE = AREA = 731.4 kN

∴ DISTRIBUTED LOAD IS CORRECT.

DISTRIBUTED AND TOTAL LOAD SUMMARY:

LEVEL	F_{OUTER} $(\frac{kN}{m})$	F_{INNER} $(\frac{kN}{m})$	$F_{TOTAL\ PER\ LEVEL}$ (kN)
1	16.45	3.14	332.97
2	22.09	3.14	610.47
3	24.13	3.14	731.20
4	23.35	3.14	683.09
5	19.43	3.14	469.23

APPENDIX C2

REACTION FORCE CALCULATIONS

TO DETERMINE THE REACTION FORCES, ASSUME A SIMPLE BEAM FIXED AT BOTH ENDS.

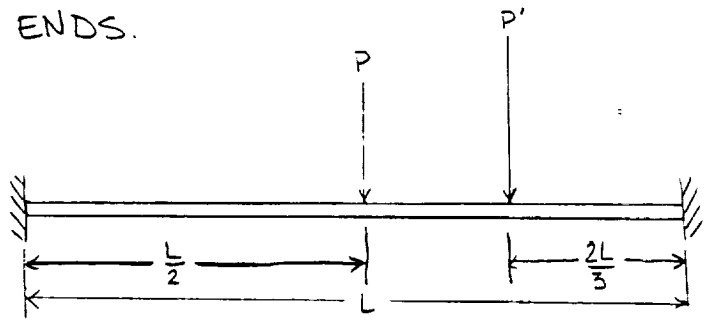

FORCES P AND P' REPRESENT THE DISTRIBUTED LOADS.

MOVING FORCE P' AND ADDING MOMENT M GIVES:

FREE BODY DIAGRAM

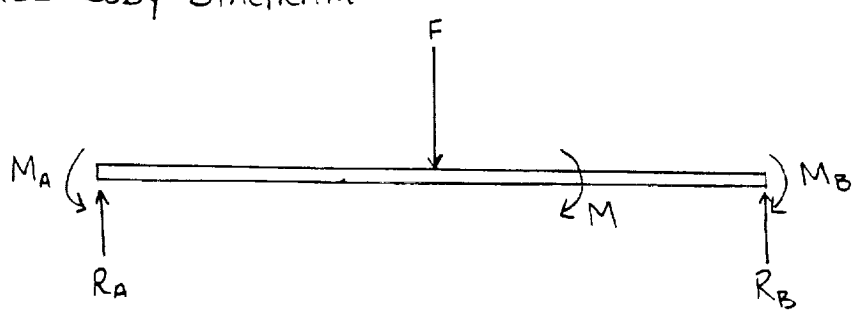

USE LEVEL 3 AS AN EXAMPLE:

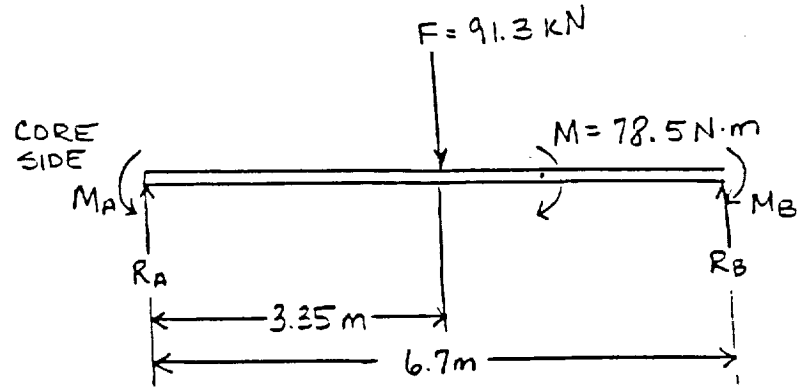

$$F = \frac{F_{OUTER} + F_{INNER}}{2}(L) = \frac{3.14\ kN/m + 24.1\ \frac{kN}{m}}{2}(6.7m)$$

$$F = 91.3\ kN$$

$$M = P'(L/2 - L/3) = (70.3\ kN)\left(\frac{6.7}{2} - \frac{6.7}{3}\ m\right)$$

$$M = 78.5\ N\ m$$

USE SUPERPOSITION: EQNS. FROM [20]

REACTIONS DUE TO F ONLY:

$$M_A = M_B = \frac{P\left(\frac{L}{2}\right)^2\left(L + \frac{L}{2}\right)}{3L^2}$$

$$M_A = M_B = \frac{(91.3\,kN)(3.35\,m)^2(6.7 + 3.35\,m)}{3\,(6.7\,m)^2}$$

$$M_A = M_B = 76.49\,kN\cdot m$$

$$R_A = R_B = \frac{F\left(\frac{L}{2}\right) - M_A + M_B}{L}$$

$$= \frac{(91.3\,kN)(3.35\,m) - 76.49\,N\cdot m + 76.49\,N\cdot m}{6.7\,m}$$

$$R_A = R_B = 45.67\,kN$$

REACTIONS DUE TO M ONLY:

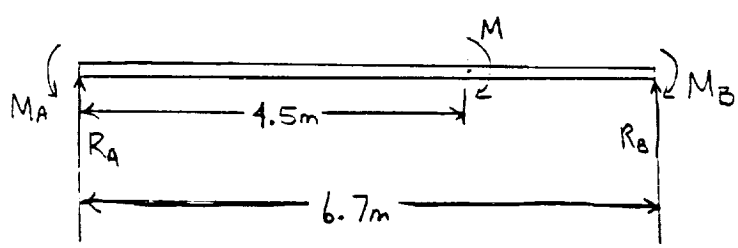

$$R_A = \frac{6M\left(\frac{L}{3} - L\right)}{L^3} = \frac{6(78.5\,kN\cdot m)(2.23 - 6.7\,m)}{(6.7\,m)^3}$$

$$R_A = -1.56\,kN$$

$$R_B = \frac{6M\left(\frac{2L}{3}\right)\left(L - \frac{2L}{3}\right)}{L^3}$$

$$= \frac{6(78.5\ \text{kN m})(4.47\text{m})(6.7 - 4.47\text{m})}{(6.7\text{m})^3}$$

$$R_B = 15.63\ \text{kN}$$

TOTAL REACTION FORCES FOR LEVEL 3

$$R_A = 45.67\ \text{kN} - 15.63\ \text{kN} = 30.04\ \text{kN}$$
$$R_B = 45.67\ \text{kN} + 15.63\ \text{kN} = 61.3\ \text{kN}$$

REACTION FORCE SUMMARY:

LEVEL	R_A (kN)	R_B (kN)
1	14.52	27.10
2	25.41	50.90
3	30.04	61.30
4	28.21	57.19
5	19.92	38.75

APPENDIX C3

SUMMARY OF MAXIMUM FORCES

The table shown below gives a summary of the maximum forces in the compressive and tensile truss members on each level. A complete set of data , provided to the sponsor in a separate report, gives a list of the forces in each member.

Level	Maximum Compressive Force (kN)	Maximum Tensile Force (kN)
1	22.0	29.5
2	75.4	57.7
3	111.0	133.0
4	82.8	102.0
5	45.0	57.3

APPENDIX C4

HORIZONTAL MEMBER SIZE CALCULATIONS

TO CALCULATE THE MINIMUM REQUIRED AREA, USE MAXIMUM FORCE ON MEMBERS;

P_{cr} (compression) = 110 KN $\quad \sigma_y = 434$ MPa

P_{cr} (tension) = 132 KN

$$A_{comp} = \frac{110\,kN}{434 \times 10^8\,Pa} = 0.000253\,m^2$$

$$A_{tens} = \frac{132\,kN}{434 \times 10^8\,Pa} = 0.000304\,m^2$$

$$A_{\substack{hollow \\ tube}} = \frac{\pi(d_o^2 - d_i^2)}{4}$$

ASSUME VALUES OF d_o, CALCULATE d_i AND THEN CHECK P_{cr}.

EXAMPLE: $d_o = 0.038m \Rightarrow d_i = \left(-\frac{4(0.000253\,m^2)}{\pi} + d_o^2\right)^{1/2}$

$d_i = 0.0335m$

THEN $I = \frac{\pi (d_m)^3 (t)}{8} = \frac{\pi \left(\frac{0.038 + 0.0335}{2}\right)^3 (0.0025)}{8}$

$$I = 4.05 \times 10^{-8}\ m^4$$

$$P_{cr} = \frac{\pi^2 E I}{L^2} = \frac{\pi^2 (72.4\ GPa)(4.05 \times 10^{-8} m^4)}{0.42\ m}$$

$$P_{cr} = 161{,}000\ N$$

∴ THE MEMBER WILL SUPPORT THE REQUIRED LOAD, BUT CAN BE SMALLER.

SUMMARY OF CALCULATIONS

d_o (m)	d_i (m)	t (m)	d_m (m)	I (m^4)	P_{cr} (kN)
0.039	0.0335	0.00225	0.0358	4.05×10^{-8}	161
0.035	0.030	0.0025	0.0325	3.37×10^{-8}	133.9
0.032	0.0265	0.00275	0.0293	2.72×10^{-8}	108
0.033	0.0277	0.00265	0.0304	2.92×10^{-8}	116 ⇐

$d_o = 0.033m$ SATISFIES P_{cr} WITH MINIMAL SIZE

FOR TENSION MEMBERS, ASSUME $d_o = 0.033m$

THEN $d_i = \left(\frac{-4(0.000304)}{\pi} - (0.033)^2\right)^{1/2}$

$$\underline{\underline{d_i = 0.0265m}}$$

APPENDIX C5

CROSS TRUSS MEMBER SIZE CALCULATIONS

TO CALCULATE THE SIZES OF THE CROSS TRUSSES AT THE PERIMETER AND CENTER OF EACH SECTION, THE TEAM USE THE LAW OF SINES.

EXAMPLE : LEVEL 3

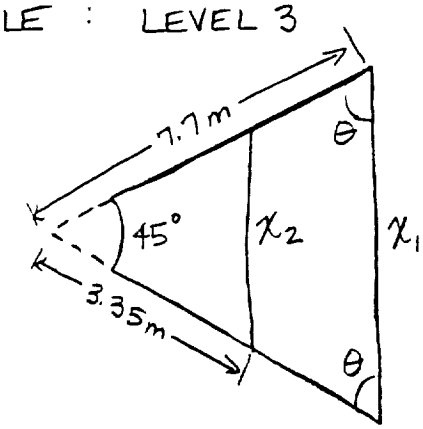

$$\theta = \frac{180-45}{2}$$

$$\theta = 67.5^\circ$$

$$\frac{\sin 45^\circ}{X_1} = \frac{\sin 67.5^\circ}{7.7} \Rightarrow X_1 = 5.89m$$

$$\frac{\sin 45^\circ}{X_2} = \frac{\sin 67.5^\circ}{4.35} \Rightarrow X_2 = 3.33m$$

SUMMARY OF HORIZONTAL CROSS MEMBER SIZES

LEVEL	X_1 (m)	X_2 (m)
1	4.02	2.40
2	5.40	3.08
3	5.89	3.33
4	5.70	3.24
5	3.98	2.76

APPENDIX C6

TRUSS LENGTH AND HEIGHT CALCULATIONS

TO DETERMINE THE HEIGHT OF EACH TRUSS SECTION, USE THE RADII CALCULATED IN APPENDIX B1.

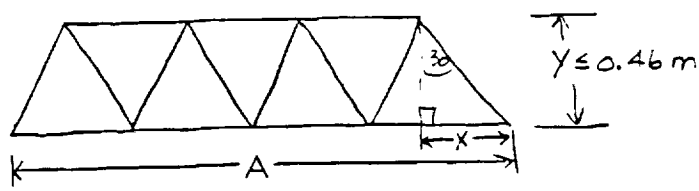

THE MINIMUM NUMBER OF HORIZONTAL TRUSS MEMBERS N, IS

$$N = \frac{A}{Y}$$ (ROUND TO NEXT WHOLE NUMBER)

THEN $\tan 30 = \frac{X}{Y}$ AND $\frac{A}{N} = 2X$

SUBSTITUTING,

$$Y = \frac{\left(\frac{A}{2N}\right)}{\tan 30^\circ}$$

EXAMPLE: LEVEL 3

$A = 5.89\,m$

$$N = \frac{A}{0.46} = \frac{5.89\,m}{0.46\,m} = 12.8 \Rightarrow \text{round to 14 members.}$$

$$X = \frac{A}{2N} = \frac{5.89\,m}{2(14)} = 0.21\,m$$

$$Y = \frac{X}{\tan 30^\circ} = \frac{0.21\,m}{\tan 30^\circ} = 0.36\,m$$

SUMMARY OF TRUSS HEIGHTS

LEVEL	HEIGHT (m)
1	0.37
2	0.37
3	0.36
4	0.40
5	0.38

APPENDIX D1

VERTICAL TRUSS FORCE AND MASS CALCULATIONS

TO COMPARE THE TWO VERTICAL SUPPORT ALTERNATES, THE TEAM PERFORMED A BUCKLING ANALYSIS FOR EACH CONFIGURATION.

FOR THE 7075 T73 AL : $\sigma_y = 434\ MPa$
$E_c = 72.4\ GPa$

FOR BUCKLING, $P_{cr} = \dfrac{\pi^2 E I}{L^2}$

$$A = \frac{P_{cr}}{\sigma_y} = \frac{42.93\,kN}{434\,MPa} = 0.0001\,m^2$$

$$I = \frac{P_{cr} L^2}{\pi^2 E} = \frac{\pi d^3 t}{8}$$

ASSUME : 8 RECTANGLES OR 8 TRIANGLES
$t = 0.005\,m$ FOR BOTH CASES

SET LOAD ON MEMBERS $= P_{cr}$
$\therefore P_{cr} = 42.93\,kN$

FOR TRIANGULAR SECTIONS,

$$\bar{d}^3 = \frac{8I}{\pi t} = \frac{8\,(7.141\times10^{-7}\,m^4)}{\pi\,(0.005\,m)} = 0.00036\,m^3$$

$$\bar{d} = 0.07138\,m$$

$$d_o = (0.07138 + 0.005) = 0.07638\,m$$
$$d_i = (0.07138 - 0.005) = 0.06638\,m$$

where $I = \left(\frac{P_{cr}}{2\cos 45^\circ}\right)\frac{L^2}{\pi^2 E} = \frac{(2035\,N)(4.1\,m)^2}{\pi^2\,(72.4\times10^9\,Pa)}$

$$I = 7.141\times10^{-7}\,m^4$$

FOR RECTANGULAR SECTIONS,

$$\bar{d}^3 = \frac{8I}{\pi t} = \frac{8\,(5.05\times10^{-7}\,m^4)}{\pi\,(0.005\,m)} = 0.00026\,m^3$$

$$\bar{d} = 0.0636\,m$$

$$d_o = 0.0686\,m$$
$$d_i = 0.0586\,m$$

$\therefore$ MEMBERS FOR RECTANGULAR SECTIONS ARE SMALLER

COMPARE MASSES OF THE MEMBERS FOR EACH CONFIGURATION:

TRIANGULAR SECTIONS,

$$V = AL = \frac{\pi}{4}(d_o^2 - d_i^2)L$$

$$= \frac{\pi}{4}\left[(0.0764\,m)^2 - (0.0664\,m)^2\right](4.1\,m)$$

$$V = 0.0046\,m^3$$

$$m = \rho \cdot V = \left(\frac{2.8 \times 10^6\,g}{m^3}\right)(0.0046)$$

$$m = 12{,}875\,g$$

RECTANGULAR SECTIONS,

$$V = \frac{\pi}{4}\left[(0.0686\,m)^2 - (0.0586\,m)^2\right](2.9\,m)$$

$$V = 0.0029\,m^3$$

$$m = \rho \cdot V = \left(\frac{2.8\,Mg}{m^3}\right)(0.0029\,m^3)$$

$$m = 8{,}112\,g$$

$\therefore$ TRIANGULAR SECTION MEMBERS ARE HEAVIER, INCREASING THE COST.

APPENDIX D2

PERIMETER TRUSS SIZE CALCULATIONS

CALCULATION OF THE VERTICAL SUPPORT MEMBER SIZES FOLLOWS THE SAME PROCEDURE AS THE HORIZONTAL SIZING.

FIRST, CALCULATE THE REACTION FORCES.

THE FORCES ARE THE VERTICAL REACTION FORCES, WITH THE ANGLES TAKEN INTO ACCOUNT.

EXAMPLE : LEVEL 3-4 SUPPORTS

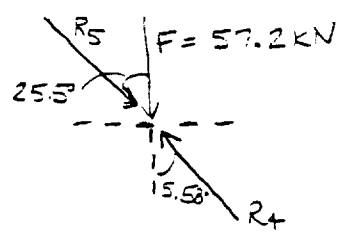

R_4 & R_5 ARE FORCES ON THE ANGLED MEMBERS.

$$R_5 \cos 25.5° = 38{,}746 \text{ N}$$

$$R_4 = \frac{(38{,}746 + 57{,}200 \text{ N})}{\cos 5.58°} = 96{,}388 \text{ N}$$

WITH $E_c = 72.4\,GPa$, $\sigma_y = 434\,MPa$ AND
$P_{cr} = 96{,}388\,N$

$$I = \frac{P_{cr} L^2}{4\pi^2 E} = \frac{(96{,}388\,N)(2.57)^2}{4\pi^2 (72.4\times10^9\,Pa)} = 2.23\times10^{-7}\,m^4$$

$$\bar{d}_3 = \frac{8I}{\pi t} = \frac{8(2.23\times10^{-7}\,m^4)}{\pi(0.005\,m)} = 0.00011\,m^3$$

(assuming $t = 5\,mm$)

$$\bar{d} = 0.04811\,m$$

$$d_o = (0.04811 + 0.005) = 0.05341\,m$$
$$d_i = (0.04811 - 0.005) = 0.04311\,m$$

CHECK FOR YIELDING: $P'_{cr} = \sigma_y A$
$= (434\times10^6)(0.00078)$
$P'_{cr} = 339{,}432\,N$

$P'_{cr} > P_{cr}$ ∴ YIELDING DOES NOT OCCUR

SUMMARY OF SIZES

LEVEL	d_o (m)	d_i (m)	P_{cr} (kN)	P'_{cr} (kN)
1	0.032	0.022	27.1	177.6
2	0.096	0.086	20.8	622.7
3	0.065	0.055	162	404.9
4	0.054	0.044	96.3	339.4
5	0.045	0.035	42.9	273.9

APPENDIX D3

I-BEAM AND CIRCULAR COLUMN COMPARISON

TO COMPARE THE SIZES OF I-BEAMS AND CIRCULAR COLUMNS REQUIRED, THE TEAM FIRST CALCULATED THE REQUIRED CIRCULAR SECTION.

$P_{cr} = 118{,}100\,N$, $L = 15.5\,m$

$$I = \frac{4L^2 P_{cr}}{\pi^2 E} = \frac{4(15.5m)^2(118{,}100N)}{\pi^2(72.4\times10^9 Pa)} = 0.00016\,m^4$$

$$d^3 = \frac{8I}{\pi t} = \frac{8(0.00016m^4)}{\pi(0.01m)} = 0.04045\,m^3$$

$d_o = 0.34326 + 0.01 = 0.35326\,m$
$d_i = 0.33326\,m$

$$\forall = A \cdot L = \frac{\pi}{4}\left[(0.35326)^2 - (0.33326)^2\right](15.5)$$
$$= 0.16715\,m^3$$

$$m = \rho\forall = (2.8\times10^6\,g/m^3)(0.16765) = 468\,Kg$$
per member

TO DETERMINE THE REQUIRED I-BEAM SIZES, THE TEAM SET I OF THE BEAM EQUAL TO I OF THE COLUMNS, AND SOLVED FOR THE VARIABLES BY TRIAL AND ERROR.

THE CLOSEST ESTIMATES WERE AS FOLLOWS:

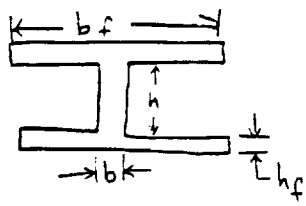

h	h_f	b	b_f
34cm	1 cm	1.5cm	20 cm
32	2	1.5cm	10 cm
34	1.5	1.5cm	12cm

THE CLOSEST ESTIMATE WAS

$h = 34cm$, $h_f = 1.5cm$, $b = 1.5cm$, $b_f = 12cm$

∴ THE TEAM CHOSE THESE DIMENSIONS FOR THE DESIGN.

$m = 377\ Kg$ PER MEMBER

APPENDIX E1

STRUCTURAL MEMBER MASS ESTIMATES

TO ESTIMATE THE MASS FOR EACH MEMBER, THE TEAM CALCULATED THE VOLUME OF EACH MEMBER AND MULTIPLIED BY THE DENSITY OF 7075 T73 Al.

HORIZONTAL SUPPORTS:

$A_{comp} = 0.000304\,m^2$ $\quad \forall = A \cdot l$

$A_{tens} = 0.000253\,m^2$

AND $m = \rho \cdot \forall$ FOR EACH MEMBER

SO TOTAL $m_{comp} = 379\,Kg$

TOTAL $m_{tens} = 328\,Kg$

CROSS TRUSSES:

TOTAL $m_{comp} = 515\,Kg$

TOTAL $m_{tens} = 461\,Kg$

TOTAL HORIZONTAL SUPPORT $m = 1683\,Kg$

VERTICAL SUPPORTS:

PERIMETER SUPPORT MEMBERS, $m = 400$ kg
I-BEAMS AT CENTER CORE, $m = 3021$ kg

TOTAL VERTICAL SUPPORT $m = 3421$ kg

TOTAL FOR HORIZONTAL AND VERTICAL
$m = 5104$ kg

ASSUMING \$10,000/lb TO SHIP TO THE MOON OR \$22,000/kg [14]

THE COST ESTIMATE FOR THE STRUCTURE IS

$$\$(22,000)(5104\,\text{kg}) = \$112,288,000$$

APPENDIX F1

ASSEMBLY SCHEMATICS

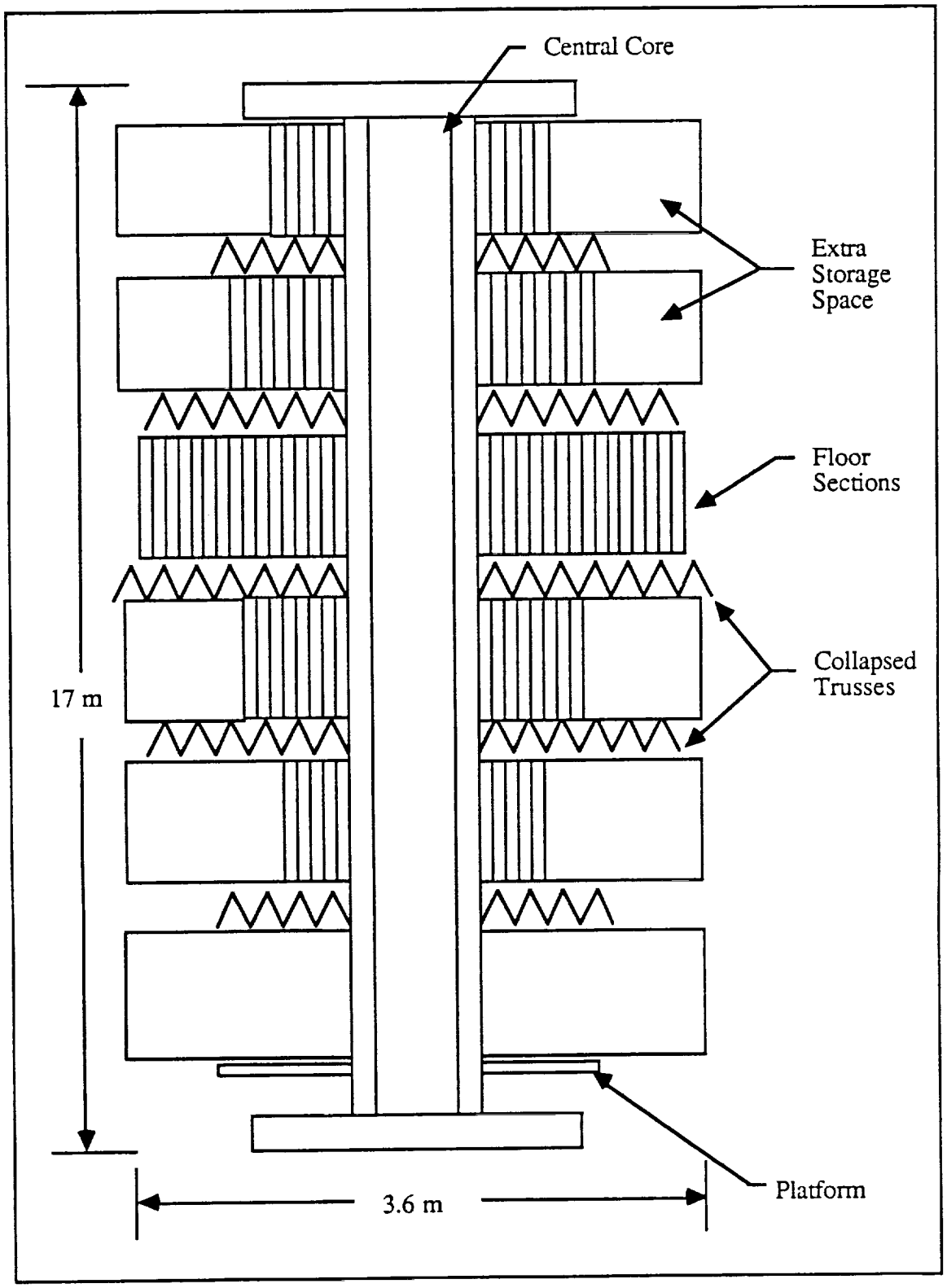

Stage one: Pre-assembly packaging.

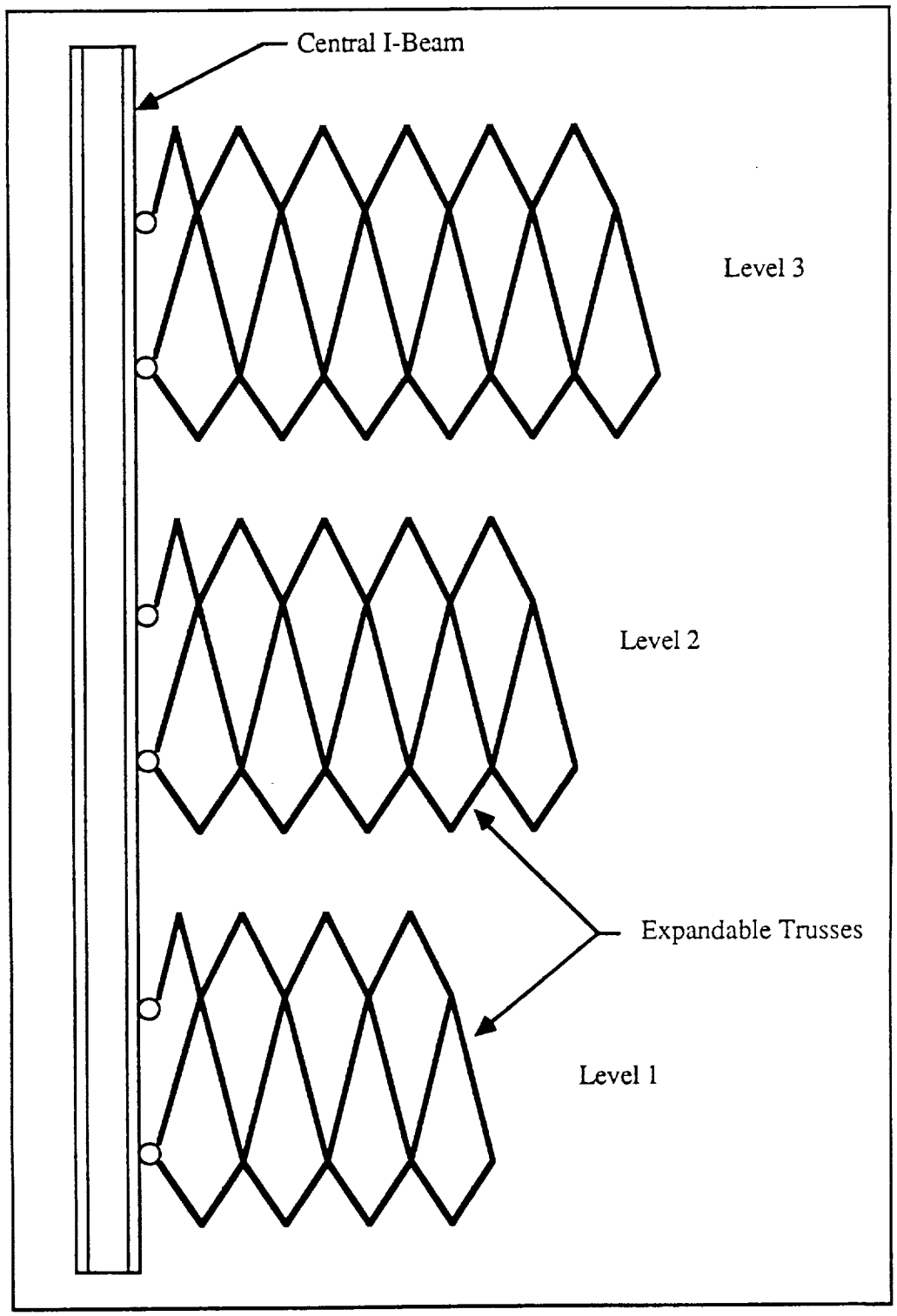

Stage three: Expansion of horizontal trusses.

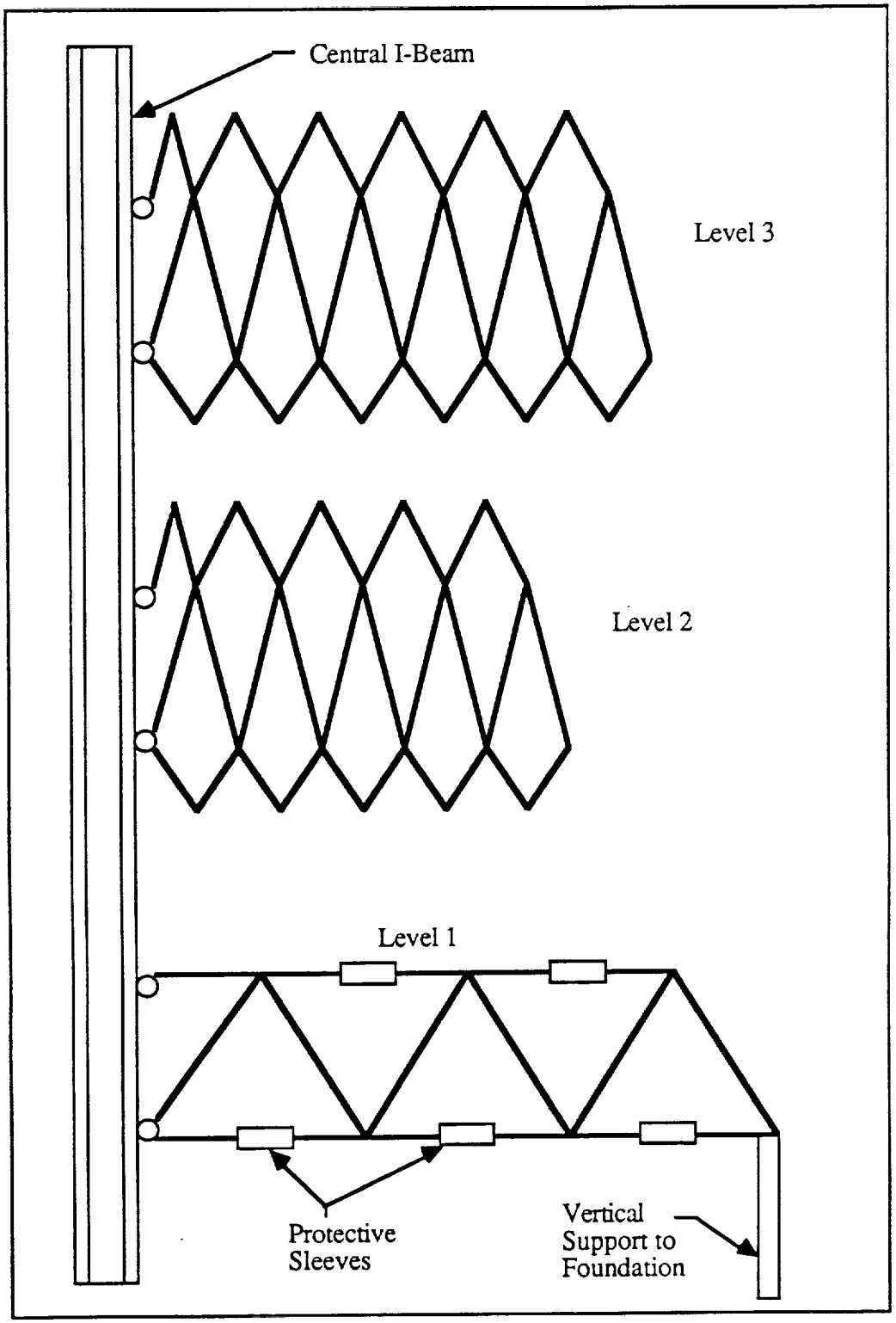

Stage three: Connection to external supports.

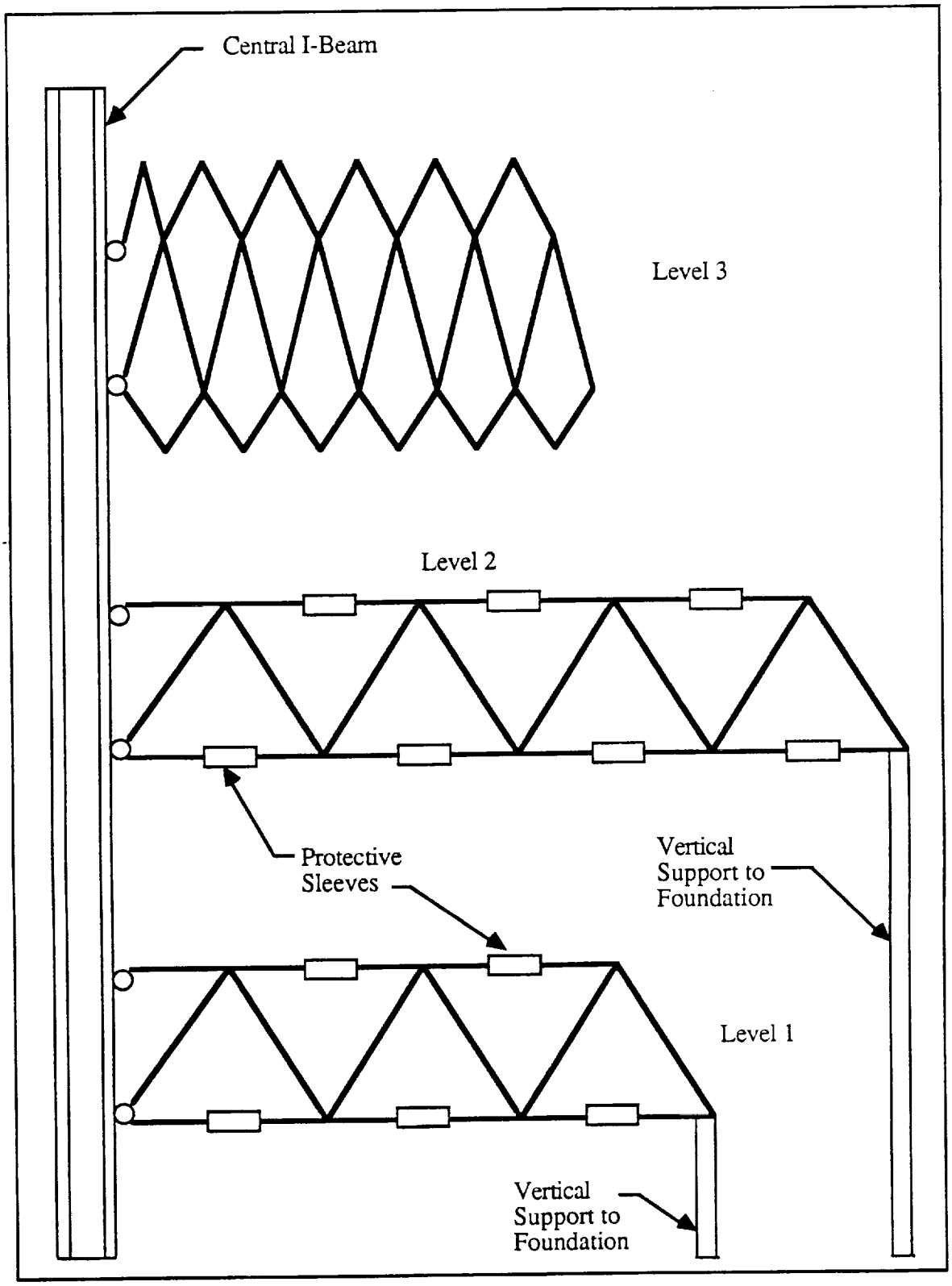

Stage three: Connection to external supports.

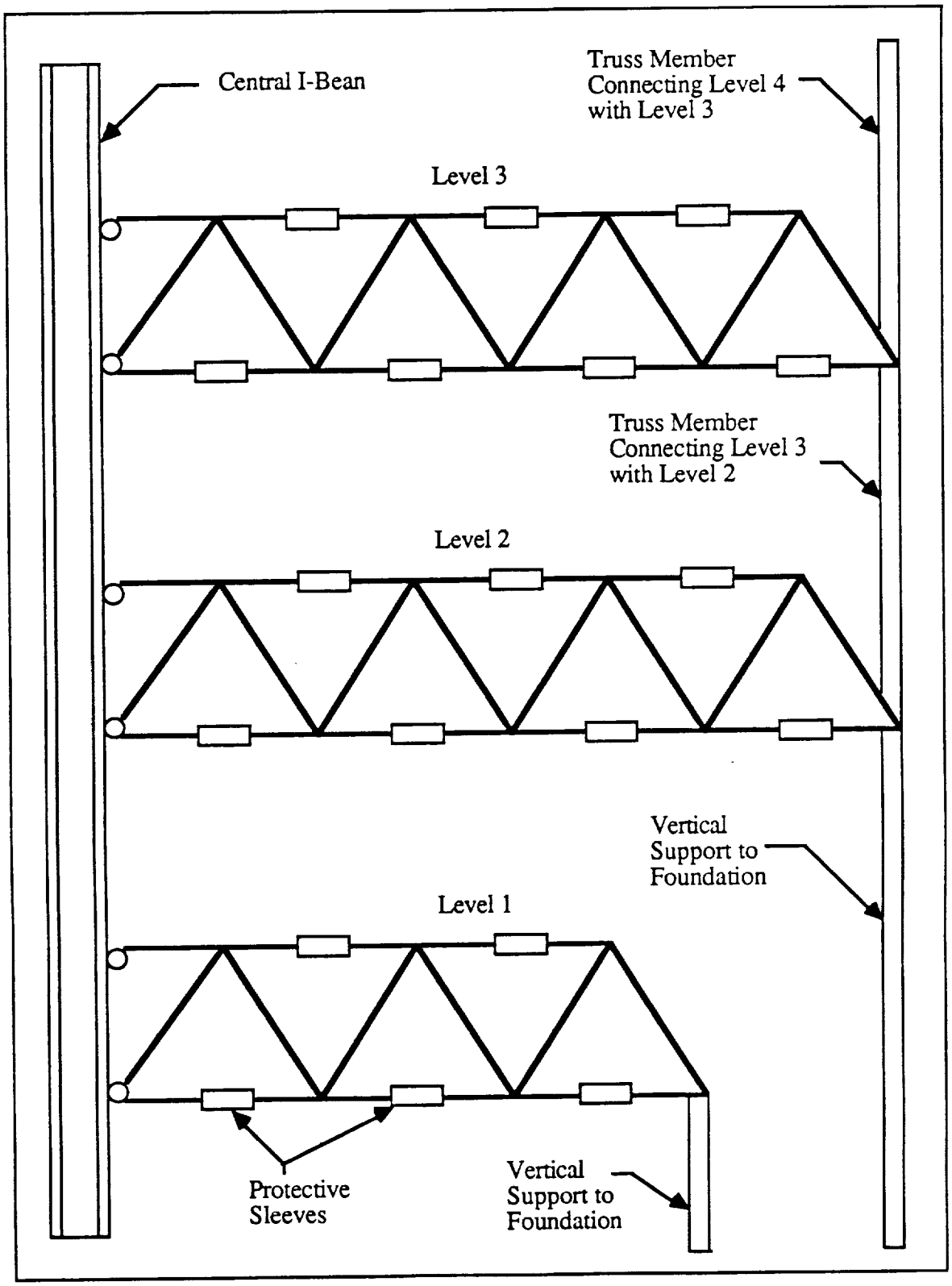

Stage three: Connection to vertical trusses.

APPENDIX G1

EXPANDABLE TRUSS ASSEMBLY

TABLE OF CONTENTS

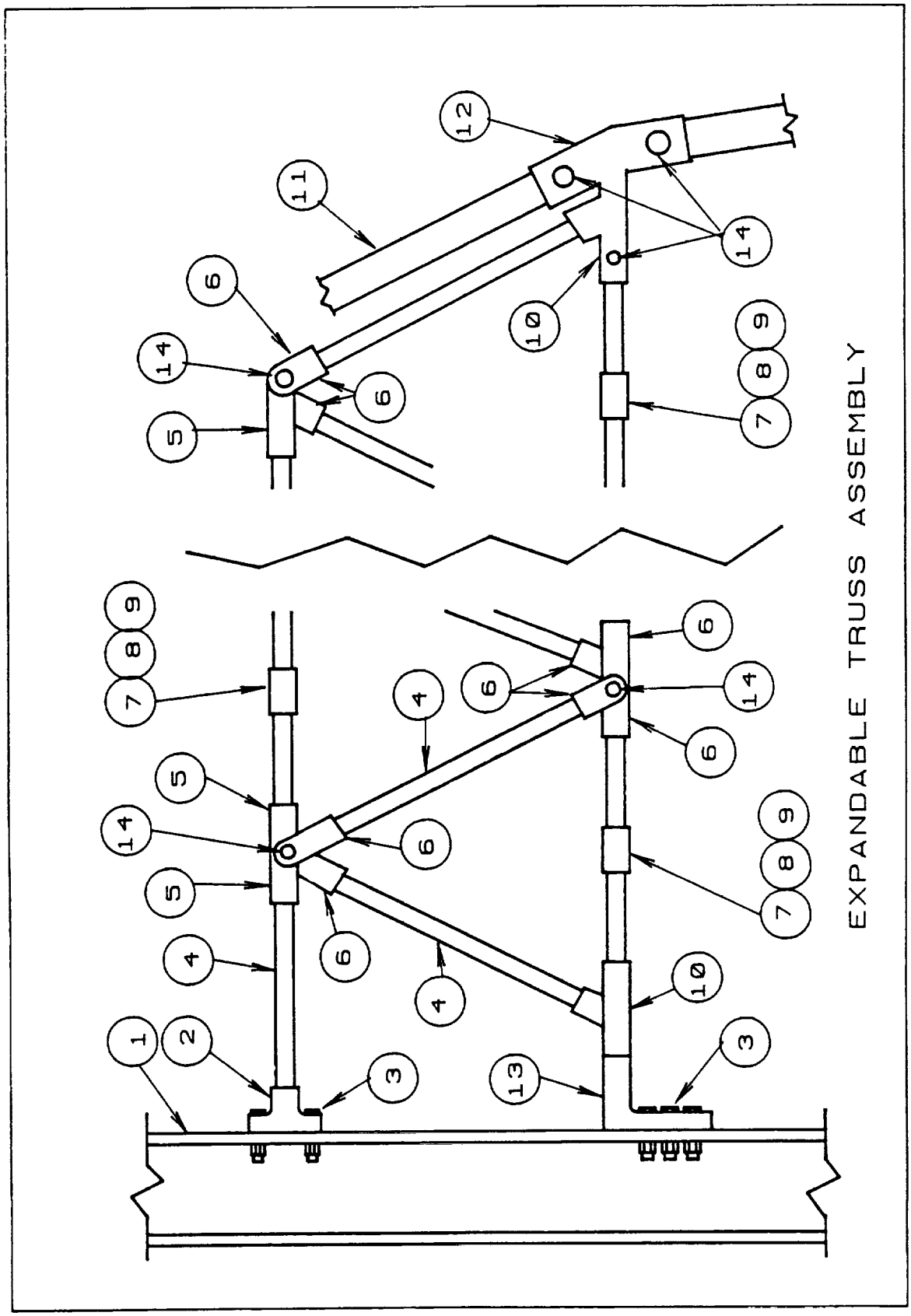
EXPANDABLE TRUSS ASSEMBLY

PART NUMBER	DESCRIPTION
1	I-BEAM COLUMN
2	UPPER FLANGE
3	NUTS AND BOLTS
4	TRUSS MEMBER
5	FLOOR SUPPORT TRUSS HINGE
6	TRUSS HINGE
7	SLEEVE
8	MAIN EYEBAR
9	EYEBAR FORK
10	END TRUSS CONNECTOR
11	VERTICAL SUPPORT
12	TRUSS/VERTICAL SUPPORT CONNECTOR
13	LOWER FLANGE
14	PIN

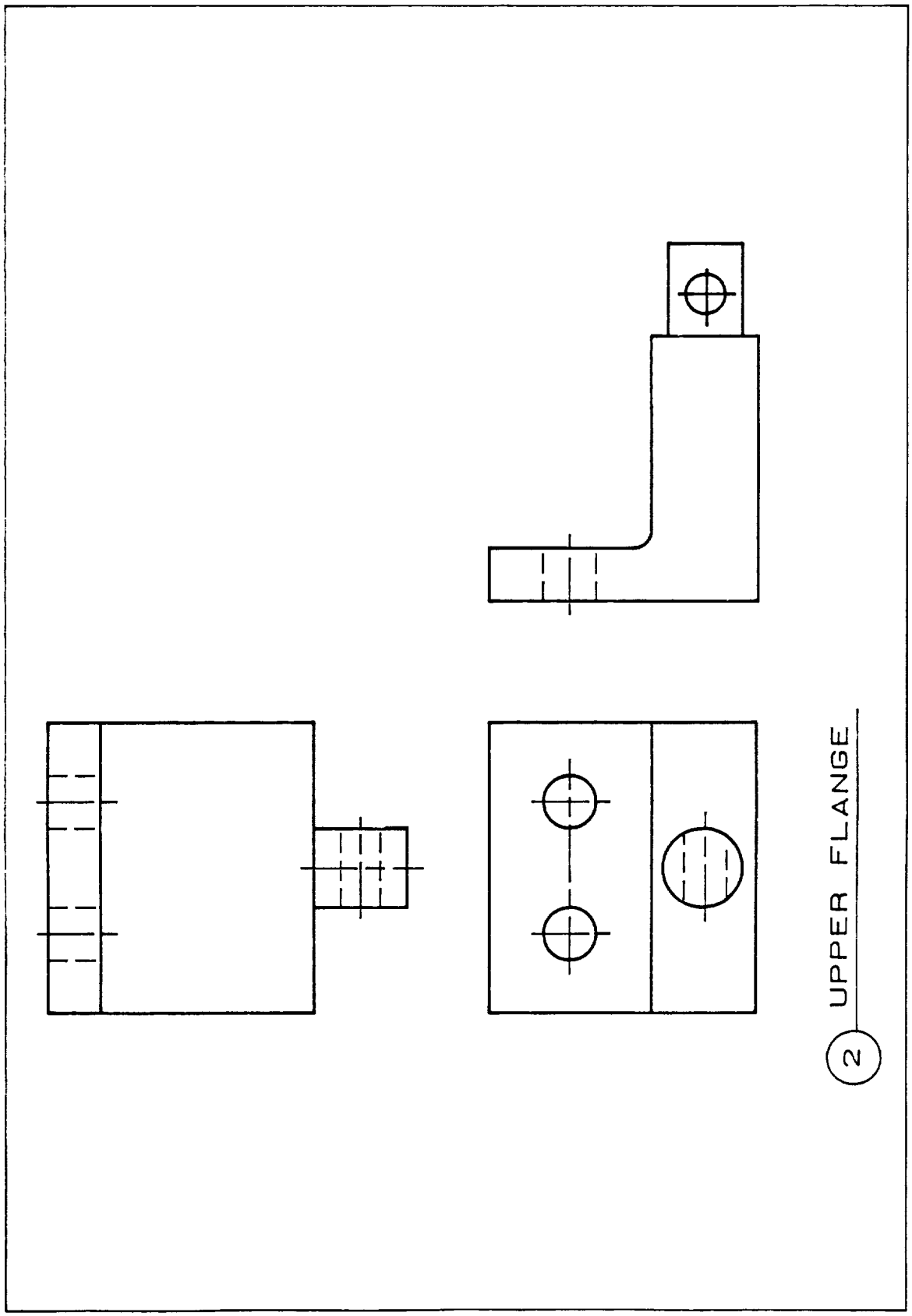
2
UPPER FLANGE

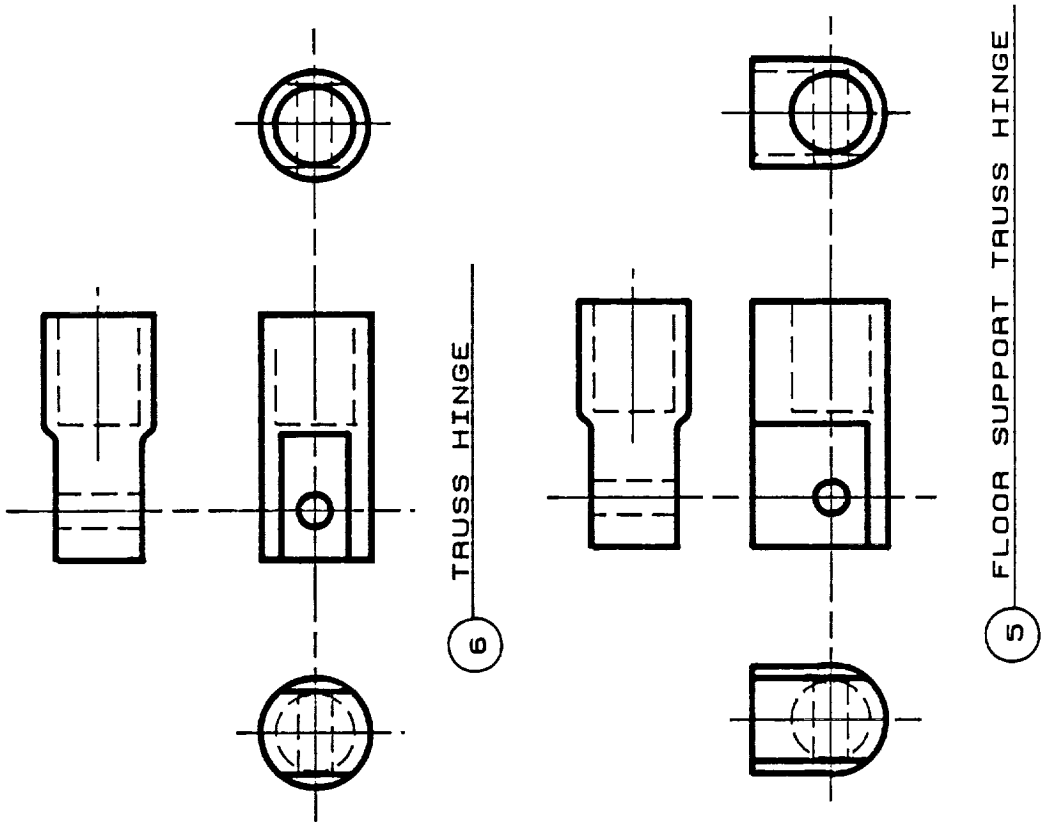
6
TRUSS HINGE
5
FLOOR SUPPORT TRUSS HINGE

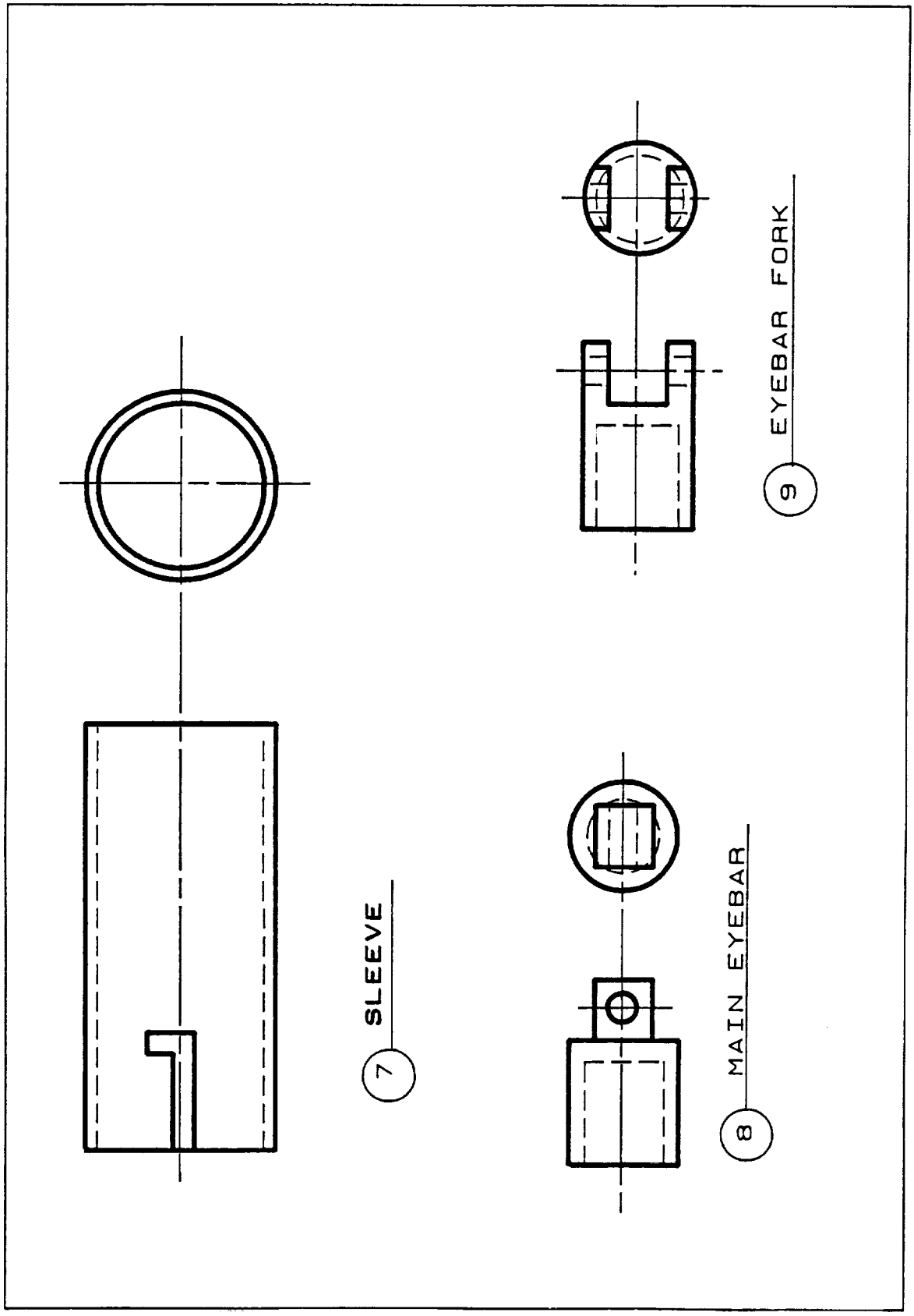
7
SLEEVE
8
MAIN EYEBAR
9
EYEBAR FORK

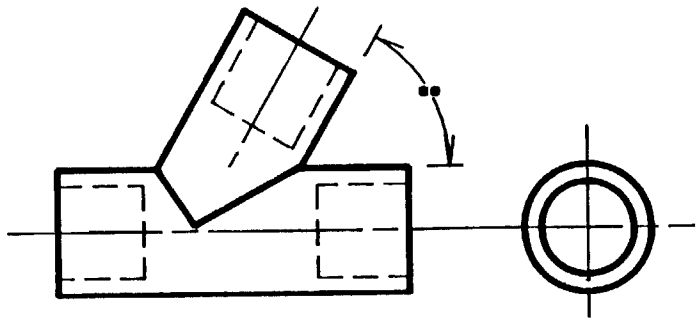

10 END TRUSS CONNECTOR

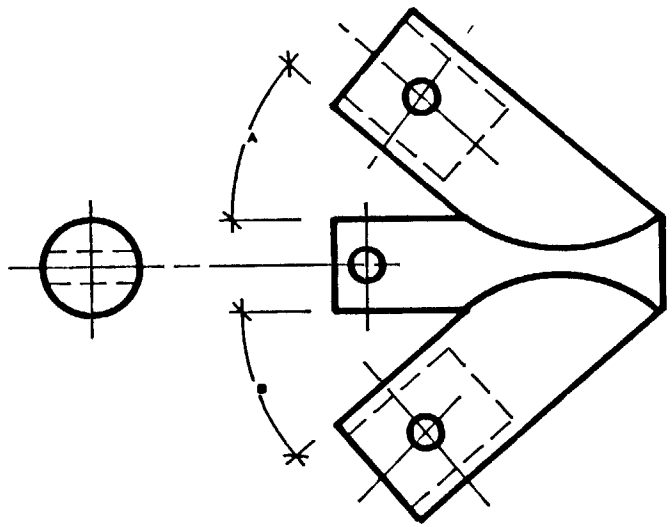

LEVEL	ANGLE A	ANGLE B
ONE	90	90
TWO	14.0	90
THRE=	5.58	14.0
FOUR	25.5	5.58
FIVE	---	25.5

12 TRUSS/VERTICAL SUPPORT CONNECTOR

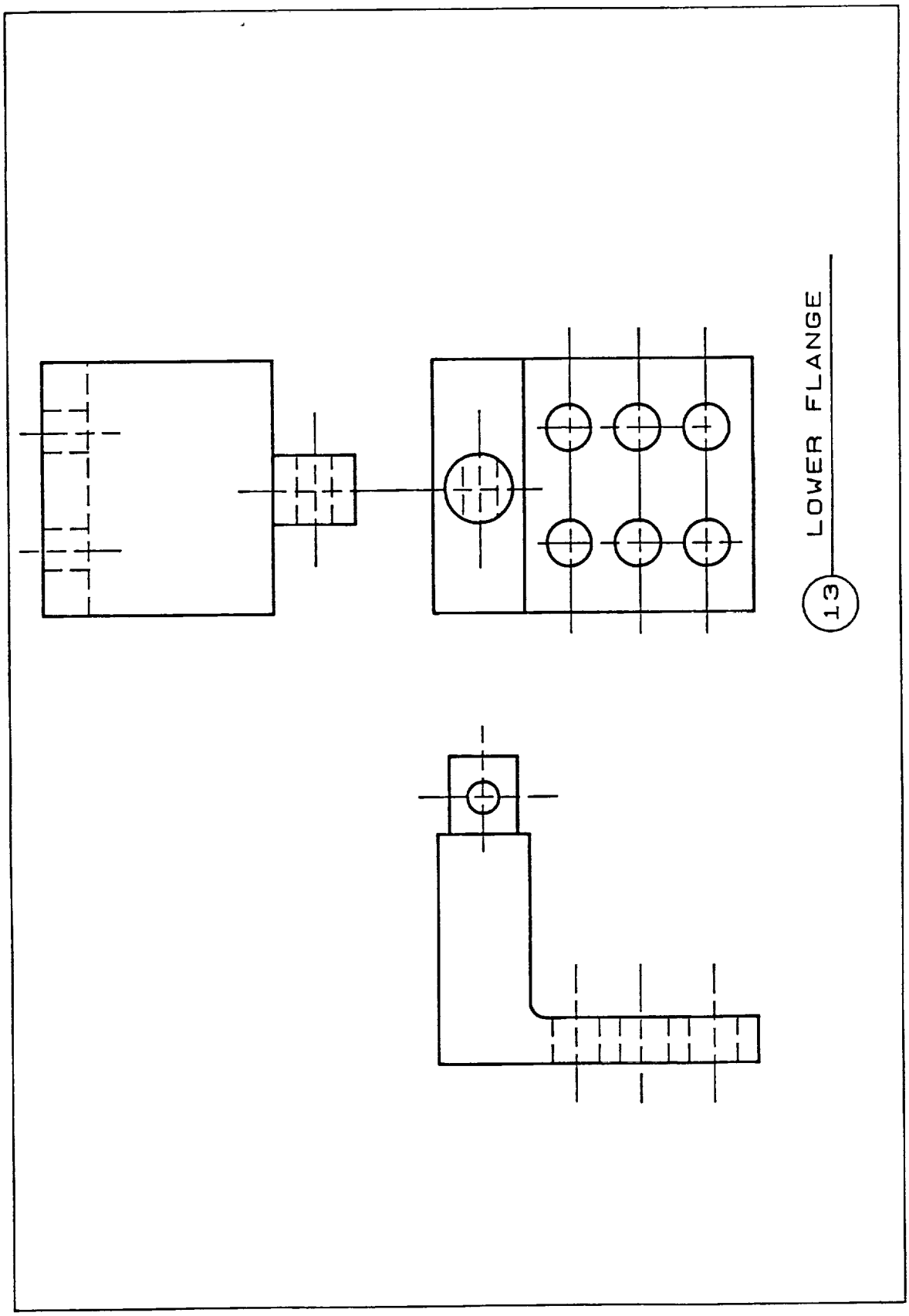
13
LOWER FLANGE