7388

NASA Technical Memorandum 105911

ISDN at NASA Lewis Research Center

Catherine Murphy Bakes
Kent State University
Kent, Ohio

and

Fredric Goldberg and Steven W. Eubanks
Lewis Research Center
Cleveland, Ohio

October 1992

NASA

ISDN AT NASA LEWIS RESEARCH CENTER

Catherine Murphy Bakes*
Kent State University
Kent, Ohio 44242

Fredric Goldberg
Steven W. Eubanks
National Aeronautics and Space Administration
Lewis Research Center
Cleveland, Ohio 44135

Abstract

The work described in this paper is an expository investigation of the potential impact of ISDN at NASA Lewis Research Center. To properly frame the subject, the paper contains a detailed survey of the components of Narrowband ISDN. The principles and objectives are presented as decreed by the CCITT. The various channel types are delineated and their associated service combinations are described. The subscriber-access network functions are explained pictorially via the ISDN reference configuration. A section on switching techniques is presented to enable the reader to understand the emergence of the concept of fast packet switching. This new technology is designed to operate over the high bandwidth, low error rate transmission media that characterizes the Lewis environment. A brief introduction to the next generation of networks is covered with sections on Broadband ISDN (B-ISDN), Asynchronous Transfer Mode (ATM), and Synchronous Optical Networks (SONET). Applications at Lewis are presented, first in terms of targets of opportunity, then in light of compatibility constraints. In-place pilot projects and testing are described that demonstrate actual usage at the Research Center.

*Summer Faculty Fellow at NASA Lewis Research Center.

Introduction

NASA Lewis Research Center has a long history of providing telecommunication and networking services to its user community. These services have completely encompassed the traditional elements of data, video, and voice. Research, management, technical, clerical, and other support staff have all shared in the benefits of a rich and varied menu of offered services. To accommodate the requirements of this diverse group of people, the telecommunication staff uses multiple networking disciplines and a wide variety of transmission media and signal technologies. Lewis, being an extended campus environment, requires a comprehensive local area network (LAN) topology. As the hub of research activity in the surrounding community, Lewis requires a metropolitan area network (MAN) topology. As a participant in the entire research community, Lewis also requires an extensive wide area network (WAN) topology. The networking challenge is to integrate these disciplines, media access, signal technologies, and topologies into an integrated well managed whole.

The primary local data support at Lewis comes from a LAN topology comprised of a set of Ethernet/IEEE 802.3 segments. The local segments are a mixture of 10base2 "thin net", 10base5 "thick net", and 10baseT technologies. These segments are formed into a campus network by connection to either a cable television (CATV) based broadband network or onto the new Lewis fiber optic Fiber Distributed Data Interface (FDDI) high speed network. In all cases, the data is transmitted using packet-switched technology over contention-based and deterministic networks, each imparting their characteristic latency and throughput behavior. Local video support is carried on the dual cable CATV Lewis Information Network (LINK) system. This broadcast system supports multiple channel two way video to the vast majority of the main campus. Voice traffic is carried by a primarily analog private branch exchange (PBX) which has recently been augmented with digital capabilities. This provides a digital switched network capability over copper twisted pair wiring to support voice and "voice like" requirements.

The metropolitan area of which Lewis is the research hub includes three areas of support: (1) a privately-owned technology park adjacent to the Lewis campus, (2) the Plumbrook experimental facility which lies about 60 miles from the main campus, and (3) a number of small groups of support personnel housed in scattered commercial buildings. These three areas are served by a unique support system which in aggregate comprises our MAN service. Area 1, the technology park, is connected to the main campus by an extensive fiber optic and coaxial cable infrastructure. Therefore data and video requirements are met in the same manner as on the main campus. Voice traffic is locally supported via a commercially provided Centrex service, and interconnected to the Lewis campus by dedicated fiber optic T1 carriers. Area 2 is beyond the reach of either the extended fiber plant or the coax-based video services. Data is supported by dedicated T1 carriers that provide serial data links between the two campus environments. Voice support is provided by a dedicated T1 connection. No video support is provided to Plumbrook at this time. Area 3 support is supplied by a variety of extended copper cable, dedicated commercial line, and dialed switched facilities.

WANs provide connectivity and interoperability between NASA centers, various universities, and other research establishments. Connectivity is provided by gateways that provide packet-switched service to both NASA private networks and the world-wide Internet. Video support is supplied by broadcast facilities interfaced to the Lewis LINK CATV system. Video conferencing is available to other NASA centers and support contractors over a circuit-switched satellite system. Voice traffic is supported by the interface of our PBX to the government's FTS 2000 telecommunications network.

A review of the Lewis networking structure shows it to be representative of the telecommunications industry as a whole. Each institution or organization in the industry has developed a networking strategy to satisfy its own requirements. These strategies combine circuit switching, packet switching, and broadcast technologies. Multiple media

and media access procedures are the rule rather than the exception. Questions of bandwidth utilization and network latency are addressed in terms of physical location and resource availability. Proprietary solutions are rampant and movement toward standard driven systems is just now gaining momentum.

There are new developments in the telecommunication and networking arena that are aimed at alleviating these problems. This paper, and the investigation which led to its production, address one of these developments-- the emergence of the Integrated Services Digital Network (ISDN). A detailed survey of the components of Narrowband ISDN (N-ISDN) is presented. An introduction to Broadband ISDN (B-ISDN) is included to indicate the direction being taken by the industry in the continuing development of ISDN. The investigation concludes with a section on the place of ISDN at Lewis Research Center. Proof of concept experiments are described, and potential application areas are highlighted.

Principles and Objectives of ISDN

The Consultative Committee for International Telephone and Telegraph (CCITT) has defined ISDN as follows: "A network evolved from the telephony Integrated Digital Network (IDN) that provides end-to-end digital connectivity to support a wide range of services, including voice and non-voice services, to which users have access by a limited set of standard multipurpose customer interfaces" [2][8][10][12][18][20][21][23]. The ISDN is planned to be a worldwide telecommunications network that will use digital transmission technology and digital switching technology to provide integrated services over digital connections between user-to-network interfaces (UNI).

The principles and objectives of ISDN, according to CCITT, include the following:

- support for voice and nonvoice (e.g., data and video) applications
- use of a limited set of standardized facilities
- support for switched and nonswitched applications
- reliance on 64 kbps connections as the fundamental building blocks of ISDN
- provision for connections at bit rates higher and lower than 64 kbps
- provision for sophisticated transmission service features, network management, and call management through intelligence in the network
- provision for a variety of physical implementations to allow for differences in national policy, the state of technology, and the customers' needs
- separation of competitively provided functions from those that are fundamentally part of the ISDN
- a framework for cost-related tariffs for ISDN service, independent of the type of data being carried, thus preventing one type of service from subsidizing others;
- provision for low-capacity support to accommodate individual users as well as multiplexed support to accommodate user-owned PBXs and LANs [21].

Another principle of CCITT is that ISDN should follow a layered protocol architecture which can be mapped into the International Standards Organization's (ISO) Open Systems Interconnection (OSI) model. This will allow existing standards for OSI-related applications to be used with ISDN, new ISDN- related standards to be based on existing standards, and standards to be developed and implemented independently for various layers and functions within a layer.

During the transition to a comprehensive ISDN, a smooth migration path will be provided for users. ISDN will evolve from existing telephone networks and the evolving network will be allowed to coexist with existing equipment and services. Interim user-network arrangements, including the use of modems and protocol conversion, will also facilitate early penetration of digital service capabilities until digital subscriber loops (DSLs) become widespread.

Channel Types

An ISDN customer may request an ISDN provider to supply any configuration of communication channels, in terms of the number of channels to be provided and the digital transmission rate on each channel. The CCITT has specified a variety of lower speed channels and is engaged in developing specifications for higher speed channels. Each channel is identified by a specific data rate (TABLE 1) and is suitable for the transmission of different services [2][8][10][21].

TABLE 1 ISDN channel types and data rates.

Channel	Data Rate
B	64 kbps
D	16 or 64 kbps
H0	384 kbps
H11	1.536 Mbps
H12	1.920 Mbps
H21	32.768 Mbps
H22	44.16 Mbps
H3	60-70 Mbps
H4	135.168 Mbps

The B channel may be used to transmit voice, circuit-switched or packet-switched data, facsimile, or slow-scan video at 64 kbps. Each B channel may be divided into two or more multiplexed subchannels, but all traffic on a single B channel must travel between the same pair of end nodes. Voice signals are digitized using pulse code modulation (PCM). Two versions of the PCM algorithm for 8-bit encoding of voice signals have been specified, mu-law and A-law [1]. The mu-law is used in North America and Japan while the A-law is used in the rest of the world. Thus, a voice signal that crosses these geographical boundaries must be automatically converted.

Two D channel data rates have been defined, 16 kbps for the basic rate interface (BRI) and 64 kbps for the primary rate interface (PRI). The BRI and PRI interfaces are described below. The primary function of the D channel is to carry signalling information for the management of circuit-switched connections on one or more B channels between the user and the network. However, at times when this signalling information requires less than the full capacity of the D channel, the excess capacity may be used to carry low speed packet-switched data, telemetry signals, or other information.

H channels are intended to transmit user information requiring data rates ranging from a few 100 kbps to hundreds of Mbps. Potential H channel applications include fast file

transfer, high resolution graphics, and videoconferencing. The CCITT has defined multiple levels of H channels which are listed, with their data rates, in (TABLE 1).

H0 channels are intended for applications such as data, voice, facsimile, or standard broadcast quality digital audio programs. Two versions of H1 channels, H11 and H12, and two versions of H2 channels, H21 and H22, have been specified. The H11 and H22 channels are designed to be compatible with the North American DS-1 and DS-3 transmission rates, respectively, while the H12 and H21 channels are related to the first and third levels of the European digital hierarchy. H1 channels are intended for applications such as standard compressed videoconferencing, private network trunks, PBX access, very fast digital facsimile, and high-speed data. H2 channels are for applications such as fast scan compressed video. H3 and H4 channels operate at higher rates and are suited for applications such as color television, compressed high definition television (HDTV), videoconferencing, video telephone, video messaging, and bulk transfer of text or facsimile [10].

Basic Service

Each user will have access to the ISDN through an interface to a "digital pipe" of a specified bit rate, selected by the user according to the user's requirements. For example, a residential customer may only require capacity to connect a telephone and microcomputer to the ISDN while an office may require capacity to connect a PBX or LAN. To date, CCITT has defined two interface structures, the BRI and PRI, each allowing a variety of combinations of channel types to be offered to the user as a package [8][10][21].

The BRI combines two full-duplex (FDX) 64 kbps B channels, one FDX 16 kbps D channel, and additional overhead for synchronization and framing which results in a total rate of 192 kbps. Two alternate versions of the basic rate channel structure, B + D

and D, have been defined for situations where the full 2B + D capacity is not required. In addition to signalling information, the 16 kbps D channel provided with basic service may be used to transmit low-speed packet-switched data, such as videotex or teletex, and telemetry signals for such applications as emergency services and energy management. The BRI is intended to allow individual users to simultaneously access voice and nonvoice services by connecting a single multipurpose terminal or multiple single-function terminals to one physical interface. For example, one B channel could be used to carry a voice call while the other is transmitting data, facsimile, low speed video, or any other signal with a data rate that does not exceed 64 kbps.

Primary Service

The PRI is intended to support users with requirements for higher transmission rates. Because of the different digital transmission hierarchies used in different countries, two PRI structures have been defined [8][10][21].

In North America and Japan, the PRI is 1.544 Mbps corresponding to AT&T's DS-1 transmission rate. A North American or Japanese customer may choose a PRI with any combination of 64 kbps B, 64 kbps D, 384 kbps H0, and 1536 kbps H11 channels, as long as the total PRI data rate is not exceeded. Each frame contains 193 bits and frames are transmitted at a rate of 8,000 frames per second. The most typical configuration consists of 23 B channels and one D channel. The 23B + D frame has 24 8-bit time slots assigned to the B and D channels plus an additional bit for framing and synchronization.

Similarly, the European PRI is 2.048 Mbps corresponding to the digital hierarchical rate provided in Europe. A European customer may choose a PRI with any combination of 64 kbps B, 64 kbps D, 384 kbps H0, and 1920 kbps H12 channels as long as the 2.048 Mbps total data rate is not exceeded. A typical European configuration consists of 30 B channels and one D channel.

If a customer has multiple PRIs, a single D channel may be used to carry the signalling information for all of the user's B and H channels. Consequently, a user may have some PRI configurations with no D channels. Possible American PRI configurations include 23B + D, 3H0 + 5B + D, 3H0 + D, 3H0 + 6B, 24B, 4H0, and H11. Similarly, possible European primary rate channel structures include 30B + D, 5H0 + D, 31B, 5H0, and H12 + D.

Reference Configurations

The architecture of an ISDN can be divided into three major parts, an interexchange network (IEN), a common channel signalling network (CCSN), and a subscriber access network (SAN) [2][10][18][21].

The IEN consists of the physical and logical transmission and switching facilities of the backbone network over which users' information is transmitted. It includes transit exchanges and transmission trunks interconnecting exchanges. The CCSN is superimposed on and interacts with the IEN. It provides the physical and logical functions required to transfer connection control signals between the IEN's components. These control signals are used for the management and allocation of network resources and for the performance of maintenance functions.

The SAN consists of the part of the ISDN between the subscriber and the IEN and CCSN. The SAN can, in turn, be divided into three components (FIGURE 1), namely the customer-premises installation (CPI), the digital section (DS), and the logical exchange termination (LET). The CPI combines those aspects of the SAN that are under the control of the subscriber. The DS consists of the digital transmission system (DTS) and the physical line termination equipment. The DTS (or local loop or DSL), provides capacity, possibly on a single twisted-pair, for FDX information transfer between the

customer premises and the local exchange. The LET terminates DTS transmissions in a logical sense.

FIGURE 1 Subscriber-access network (SAN) reference configuration

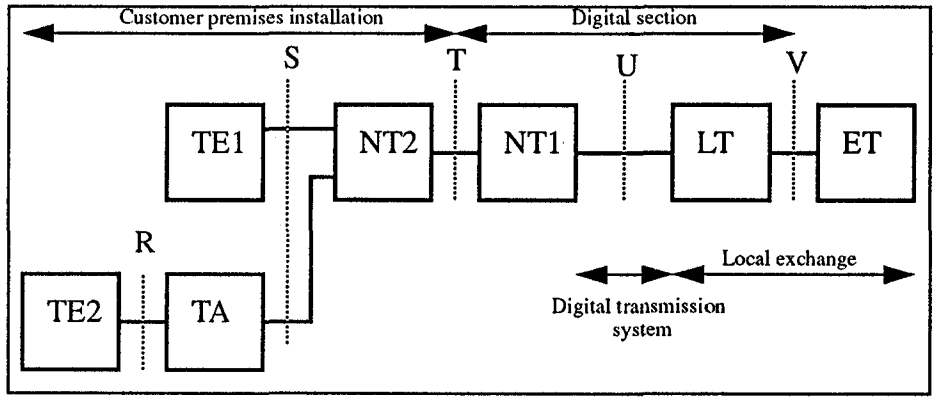

In order to allow many types of equipment to interface with an ISDN, the CCITT has developed reference configurations for the SAN, IEN, and CCSN. These reference configurations are conceptual decompositions into various categories of "functional groups" that interact with each other across so-called "reference points." The functional groups may or may not correspond to specific physical devices. The reference points define conceptual demarcation points between pairs of functional groups.

SAN Reference Configuration

The SAN reference configuration (FIGURE 1) decomposes the SAN into general functional groups and reference points (R, S, T, U, and V above), which are used to clearly define a demarcation line between the responsibilities of the subscriber and those of the network provider. The SAN reference configuration also allows the customer premises part of the ISDN to evolve independently of the network provider, as long as both adhere to a standard ISDN interface structure.

The exchange termination (ET) corresponds to the LET and is the logical part of a subscriber's central office (CO). It performs functions associated with the logical attachment of the SAN to the IEN, including signal insertion and extraction, conversion of information exchange codes, and frame alignment.

The line termination (LT) contains the physical aspects of terminating a DTS on the networks provider's premises. LT functions include feeding power across the DTS to the customer's installation and transmitting loopback signals for fault location. Together, the ET and LT are that part of a CO that is dedicated to a set of subscribers accessing the network over one DTS.

Network termination type 1 (NT1) performs functions associated with the physical and electrical termination of the ISDN on the customer premises side of the DTS. NT1 forms a boundary to the network, performs conversion between signals generated and received by customer equipment and those transmitted over the DTS, and presents a physical connector interface for attaching user devices. Other NT1 functions include transmission timing, power transfer to the customer premises equipment (CPE), layer 1 multiplexing, and contention resolution for multidrop line termination. NT1 also cooperates with ET in providing loopback testing, fault diagnosis, performance monitoring, and line maintenance for the SAN.

Network termination type 2 (NT2) allows construction of a private network. NT2 functions usually correspond to those of a switching device (e.g., a PBX, terminal cluster controller, or LAN) on the customer's premises. Key features include multiplexing, concentration, and protocol handling at OSI layers 2 and 3.

Terminal equipment (TE) corresponds to customer equipment that makes use of an ISDN and incorporates functions required for protocol handling and physical connection to equipment associated with NT1 or NT2 functions. Examples include digital fac-

simile equipment, integrated voice/data terminals, digital telephones, microcomputers, and workstations. Two types of TE are identified, TE type 1 (TE1) and TE type 2 (TE2). TE1 represents a device such as a digital telephone that is capable of supporting a standard ISDN interface. TE2 devices encompass existing non-ISDN data communications equipment with such interface characteristics as RS-232C, RS-232D, X.21, and X.25, as well as various nonstandard and proprietary protocols.

A terminal adaptor (TA) is required to allow a TE2 terminal to be served by an ISDN user-network interface. A TA provides the capability to convert the layer 1 to 3 protocols of a TE2 into those of a TE1, so that the combination of a TE2 and a TA appears as a TE1.

The functional groups in the SAN reference configuration interact with each other across five distinct reference points that correspond to physical or virtual interfaces between the functional groups (FIGURE 1). The R (Rate) reference point, between the TE2 and TA, provides a non-ISDN interface between TE2 and TA equipment. The R reference point, which may comply with older interface standards such as EIA-232D and X.25, allows an existing TE2 device to be connected to the ISDN without modification of the TE2. The S (System) reference point defines the demarcation between the TE1 or TA on one side and the NT2 on the other. It acts as an access point for an individual ISDN terminal and separates user terminal equipment from network related communications functions. The T (Terminal) reference point marks the interface between NT1 and NT2 and acts as the network termination on the customer's premises. The U (User) reference point defines the interface between the DTS and the NT1. The V reference point separates the physical and logical aspects of terminating the SAN on the network provider's premises.

Within the scope of the general SAN reference configuration of FIGURE 1, many different physical arrangements of functional groups and reference points are possible. For

example, the NT2 may be absent, in which case the terminal equipment connects directly to the physical NT1 and the S reference point disappears or coalesces into the T reference point. Alternately, two adjacent functional groups, e.g., TE1 and TE2, TA and NT2, or NT1 and NT2, may be combined into a single functional group thus eliminating one of the explicit reference points between them. Multipoint and star configurations, in which several terminals may be connected to a shared NT2 or NT1 are also permitted.

Note that the TE1, TE2, TA, and NT2 functional groups are contained in the CPI, NT1 and LT are contained in the DS, and ET corresponds to the LET. The components of the SAN reference configuration can be divided into two groups depending on whether they are considered to be the responsibility of the customer or of the network provider. Currently, the regulatory agencies in most countries consider TE1, TE2, and TA to be under the control of the subscriber and NT1 and NT2 to represent the physical and logical termination of the network. In such countries, the S and T reference points, which interface between user's equipment and provider's equipment, become the so-called UNI. In North America, the FCC and other regulatory agencies consider NT1 to also be a part of the user side, so that the physical boundary between the subscriber and the network provider corresponds to the U reference point.

Common Channel Signalling

Control signals are used in circuit-switched networks for network management and for establishing, maintaining, and terminating calls [2][10][11][18]. They are exchanged between subscribers and central office switches, among switches, and between switches and network management centers. The functions of call-related control signals include audible communication with the subscriber for transmission of a dial tone, ringing tone, or busy signal; transmission of the number dialed to allow switching offices to establish a connection; transmission of information between switches indicating that a call cannot

be completed; transmission of a signal to make a telephone ring; and transmission of information used for billing purposes. Control signals used for network management carry information giving the status of trunks and equipment for use in routing and maintenance.

Traditionally, control signals for circuit-switched networks have been transmitted using inchannel signalling in which the control signals are transmitted on the same circuit as the voice or data signal. In ISDNs, control signals are transmitted via common channel signalling (CCS)[3][7][13][15][16]. That is, they are transmitted over circuits which are dedicated to control signals, are common to a number of voice and/or data channels, and carry information to identify the mix of signals and bit rates multiplexed on the digital pipes. CCS offers a number of advantages over inchannel signalling, including reduced call-setup time and greater adaptability to evolving functional needs. Signalling System Number 7 (SS7), which is currently used to provide common channel signalling on ISDNs, follows a layered protocol architecture and offers some new features including Automatic Number Identification (ANI) which permits a caller's name and phone number to be displayed when a phone call is received [21].

Traditional Switching Techniques

A number of switching options will be supported by ISDN. These include circuit switching, packet switching (both semipermanent virtual circuit and datagram switching), and permanent virtual circuit (similar to a leased line, a connection to another user is set up by prior arrangement without requiring a call establishment protocol).

Circuit switching, which is used by PBXs and on national and international public telephone networks, is the basis on which ISDN services will be built. Communication via circuit switching involves three phases [10][21]. During the circuit establishment phase before signal transmission begins, a network subscriber places a call to another sub-

scriber and the network selects a route from the calling subscriber to the called subscriber. This path is a connected sequence of trunks between network switching nodes such that, on each of the physical links, a channel is dedicated to the connection. During the signal transfer phase, voice, data, or other digital/digitized signals are transferred along the end- to-end path. During the circuit disconnect phase, the connection is usually terminated by the action of one of the two subscribers.

With circuit switching, channel capacity is dedicated for the duration of a connection, even if no signal is being transferred. With the exception of the delay for circuit establishment and of the propagation delays during signal transfer, all other delays (e.g., node queueing delays) are negligible. Once established, the circuit is transparent to the subscribers and signals are transmitted with negligible and nonvarying delay. Circuit switching also avoids the routing, flow control, and error control of packet switching and provides relatively inexpensive and reliable service.

The long haul circuit-switched telecommunications network was originally designed to handle voice traffic. For voice connections on circuit-switched networks, utilization is high because someone is talking most of the time. However, circuit switching may be inappropriate for data connections because the line may be idle for much of the connection duration and because the line provides only one data rate. For data connections, a packet-switched network (PSN), which is a distributed collection of packet-switched nodes, may be more appropriate.

In packet switching, data are transmitted in short packets with longer messages broken into a series of such packets. Each packet contains some or all of a user's data message and some control information for routing and addressing. At each intermediate node between a source and destination, the packet is received, briefly stored, and passed on to the next node. In this manner, line efficiency is higher since an individual link can be

dynamically shared by many packets over time, and different data rates and priorities are possible. Two approaches are used in PSNs: datagram and virtual circuit (VC).

In the datagram approach, there is no call setup phase and each packet or datagram is treated independently. Thus, packets to the same destination may follow different routes and arrive in a different sequence from which they were sent. The destination must therefore reorder the packets and must know how to detect and recover when packets get lost.

With VC packet switching, a route is established during a call setup phase prior to data transfer between two stations. The stations may then exchange data over the established route, which is fixed for the duration of the logical connection, and each data packet contains a VC identifier as well as data. In VC switching, paths are not dedicated as they are in circuit switching and intermediate nodes do not make routing decisions as in the datagram approach. Also, since all packets follow the same route, they arrive in their original order.

The X.25 protocol standard, which specifies an interface between a host system and a PSN at the lowest three levels of the OSI model, will be used initially for packet switching in ISDN [8][21]. The physical level deals with the physical interface (i.e., X.21 or RS-232-C) between an attached station and the link attaching the station to the packet switching node. The link level provides for the reliable transfer of data across the physical link by transmitting the data as a sequence of frames. LAP-B, which is a subset of HDLC, is the link level standard in X.25. The packet (or network) level provides a VC service. In addition to user data, X.25 also transmits control information in control packets for the establishment, maintenance, and termination of VCs. These control packets include the VC number, packet type to identify the particular control function, and additional information related to that function.

Data traffic can be classified into two categories: stream and bursty. Stream traffic is characterized by lengthy and fairly continuous transmissions, e.g., file transfer, telemetry, batch processing applications, and digitized voice communications. Bursty traffic is characterized by short, sporadic transmissions, e.g., terminal-host traffic for transaction processing, data entry, and time-sharing applications.

Circuit switching costs depend on the data rate, connection time, and distance. While this is not efficient for bursty traffic, it is appropriate for occasional stream-oriented requirements. Dedicated (or leased or semipermanent) circuits may be more economical for high volumes of stream traffic between a few sites because they incur a fixed cost based on data rate and distance.

Packet switching is most appropriate if the traffic is primarily bursty and requires multiple data rates, e.g., via a public PSN where the cost is determined by the connection time and traffic volume, but not the distance. For high volume, bursty traffic concentrated among a small number of sites, a private PSN (or permanent virtual circuits) may provide the best solution.

Fast Packet Switching

Packet switching was developed to operate over transmission facilities characterized by relatively low speeds and relatively high bit error rates. The high speed transmission facilities and very low error rates of modern digital transmission links, such as optical fiber links, eliminate the need for error control on a per link basis. This evolution has led to the development of the fast packet switching (FPS) concept in which the hop by hop error control and flow control used in data link control protocols such as HDLC are eliminated. However, FPS networks can provide the option of using end-to-end error control in case a particular service requires completely error-free transmission.

While traditional packet switching requires each node to perform both data link layer and network layer processing, FPS only requires network layer processing. Since there is no link level error control or flow control, sequence numbers are no longer required. If a node detects that a packet contains an error, it discards that packet without requesting a link level retransmission. Consequently, the only fields required for control functions are two flags used as delimiters, a frame check sequence for error detection, and a VC number for routing. In order to further reduce processing delays at intermediate nodes in FPS networks, the virtual circuit approach is employed and routing functions are implemented in hardware or firmware [21].

ISDN Services

CCITT has divided ISDN telecommunications services into two categories known as bearer services and teleservices [2][10][12][21]. Bearer services provide the capability for information transfer between communicating terminals, as well as signalling between the terminals and the network. Generally, these information transfer and signalling functions extend only to layers 1 through 3 of the OSI reference model. Bearer services can be provided over circuit-switched connections or via packet switching, with the rates of information transfer conforming to the channel structure for basic access and primary access. Examples include 64 kbps circuit-switched connections with no restriction on bit pattern and 64kbps permanent virtual circuits.

Teleservices build on and extend the functions of bearer services by also including capabilities at layers 4 through 7. Telephony, teletex, Group 4 facsimile, videotex, and telex are examples of teleservices.

Bearer services and teleservices are further divided into basic services and supplementary services. The basic services (such as telephony) provide the essential aspects of the service and are available on a standalone basis. The supplementary services (such as

call-forwarding) modify or augment a basic service and are only offered in association with a basic service.

For circuit-switched bearer services, user information is carried across the SAN over one or more B or H channels and between SANs by a circuit-switched IEN. For example, basic access circuit-switched connections may be used for dialing up a voice connection between a pair of subscribers.

Packet mode bearer services are likely to be provided in a number of different ways. To accommodate existing X.25 PSNs, one method has been developed as a hybrid service. With this method, packet switching functions are carried out according to the X.25 protocols, but access to the PSN resources is provided by ISDN circuit-switched procedures. CCITT is also considering "additional packet mode bearer services" to integrate the protocols that control the access channel and the virtual circuits. Four bearer services of this type are under consideration.

In a packet-switched connection over a B channel between a pair of end-users, the packet-switched IEN (PSIEN) may be accessed via the basic access channel structure between a TE and a packet handler (PH). The PH performs functions of the ET and interfaces the SAN with the PSIEN. User information is then transferred over virtual circuits between the TEs.

To date, CCITT has identified eight circuit mode bearer services and one hybrid packet mode bearer service corresponding to presently envisioned ISDN applications.

Broadband ISDN

Today's networks typically provide a fixed allocation of bandwidth, data rates up to 1.544 Mbps, voice and data services, and heavyweight protocols to perform extensive error control. In the not too distant future, networks will be expected to provide data

rates up to 10 Gbps in order to meet user demands for applications such as HDTV, high quality image processing, high- capacity workstations, videoconferencing, and LAN-to-LAN interconnection [5][6][14][22]. Future networks will also be expected to support dynamic allocation of bandwidth and, due to the high reliability of fiber optics, light-weight protocols which use minimal overhead for error control. Broadband ISDN (B-ISDN) is intended to meet these requirements and, to contrast with B-ISDN, the original ISDN concept is referred to as narrowband ISDN (N-ISDN) [21].

The 1988 I-Series of recommendations included the first two recommendations relating to B-ISDN, I.113 and I.121, and defined B-ISDN as a service "requiring transmission channels capable of supporting rates greater than the primary rate." The first detailed plan for providing B-ISDN services was issued by CCITT in 1990 as an interim set of draft recommendations. Three transmission services were defined for B-ISDN: FDX 155.52 Mbps; asymmetric with 155.52 Mbps from subscriber to network and 622.08 Mbps in reverse direction; and FDX 622.08 Mbps. B-ISDN services were also classified into interactive services and distribution services [2].

Interactive services, which are intended for use in two-way information exchange between two subscribers or between a subscriber and a service provider, are divided into conversational, messaging, and retrieval services. Conversational services will provide means for real-time, end-to- end communication such as video telephony, videoconferencing, video surveillance, high-speed telefax, and high-speed data transfer for LAN, MAN and host interconnection. Messaging services will provide video and document mail service, possibly through the use of electronic mailboxes with store and forward or message handling functions. Retrieval services will support applications such as videotex retrieval from databases, possibly with sound and high resolution video, and video retrieval from a film or video library facility.

Distribution services, which will be primarily transmitted one- way from service provider to B-ISDN subscriber, are divided into distribution services with and without user presentation control. Distribution services "with user presentation control" will distribute information from a central source in a manner that allows the subscriber to control the start and order of presentation. Distribution services "without user presentation control" will include broadcast services such as TV program distribution, HDTV, and document distribution for access to electronic newspapers.

ATM and SONET

Synchronous time division multiplexing has been rejected for use with B-ISDN transmission and switching facilities because it is not sufficiently flexible to support widely differing bit rate requirements, delay requirements, burstiness levels, and call durations [21]. CCITT has therefore developed fast packet switching technologies such as Asynchronous Transfer Mode (ATM) to provide a flexible allocation of bandwidth and delay for various packet, circuit-switched, and dedicated services [4][5][6][8][9][10][12][17]. Unlike today's synchronous TDM networks, periodic time slots are not assigned to a channel in ATM. A consensus exists that ATM is fundamental for B-ISDN and that it will be used for all information transfer across the UNI.

ATM is a packet-oriented transfer mode that allows multiple logical connections to be multiplexed over a single physical interface. There is no link-by-link error control or flow control. The information flow on each logical connection is organized into fixed size packets called cells. Each cell contains 53 octets, including a 5 octet header and a 48 octet information field. Advantages of these small, fixed size cells include reduced queueing delays for high priority cells and more efficient switching. Furthermore, existing ISDN applications and control signalling protocols can be accommodated by

employing segmentation and reassembly to map LAP-D (the standard data link control protocol of N-ISDN and B-ISDN) frames into ATM cells.

A logical channel in ATM is referred to as a virtual channel (VC), analogous to an X.25 virtual circuit, and is the basic unit of switching in B-ISDN. A VC is set up between two end users through the network and a variable rate FDX flow of fixed size cells is exchanged over the connection. ATM also uses virtual paths (VP), which are bundles of VCs having the same end-points. All of the cells flowing over all of the VCs in a single VP are switched together. Some characteristics of VCs and VPs, along with methods for their establishment and release, are specified in interim recommendation I.150. For example, the user and the network can negotiate parameters such as average data rate, peak data rate, burstiness, and peak duration for each VC.

The American National Standards Institute standard for Synchronous Optical Network (SONET) and the CCITT recommendations (G.707, G.708, and G.709) for Synchronous Digital Hierarchy (SDH) are compatible specifications that can be used to transport ATM cells over optical networks [1]. The SONET standard uses any number of 51.84 Mbps STS-l signals as building blocks to define a multiplexing hierarchy of digital data rates ranging from 51.84 Mbps to 2.488 Gbps (TABLE 2). The STS-n electrical signals are then converted into OC-n optical signals. The SONET STS-l frame can logically be viewed as a 9 row by 90 column matrix in which each column is one octet wide. (FIGURE 2) The first 3 columns of the frame (i.e., 27 octets) are devoted to overhead and the remaining 87 columns (i.e., 783 octets) contain the payload. These 810 octet frames are transmitted 8000 times per second, providing the 51.84 Mbps data rate.

While older North American and CCITT hierarchial schemes are incompatible, SONET provides a standardized hierarchy of multiplexed digital transmission rates that accommodates existing North American and CCITT rates.

TABLE 2 SONET/SDH Signal Hierarchy

Electrical Signal	Optical Signal	CCITT Designation	Data Rate (Mbps)
STS-1	OC-1		51.84
STS-3	OC-3	STM-1	155.52
STS-9	OC-9	STM-3	466.56
STS-12	OC-12	STM-4	622.08
STS-18	OC-18	STM-6	933.12
STS-24	OC-24	STM-8	1244.16
STS-36	OC-36	STM-12	1866.24
STS-48	OC-48	STM-16	2488.32

FIGURE 2 STS-1 Frame Format

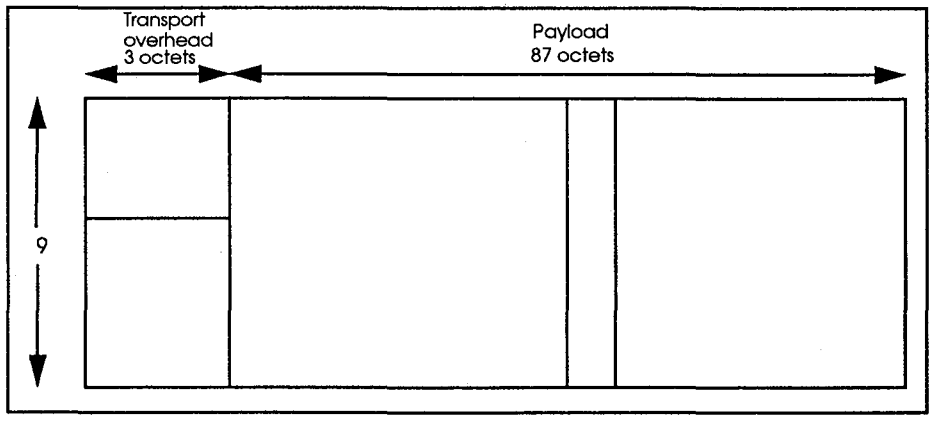

The SONET STS-3 signal at 155.52 Mbps corresponds to STM-l, which is the lowest rate in the CCITT SDH hierarchy. Through the use of pointers, SONET also offers flexible drop and insert capabilities to accommodate lower speed signals such as DS-1 provided by today's networks, as well as future high speed applications.

B-ISDN will continue to support circuit-mode applications, but over a packet-based transport mechanism. Thus ISDN, which began as an evolution from circuit switching telephone networks, will be transformed into a PSN as it evolves to B-ISDN by progressively including additional broadband functions and services.

Because fiber optic transmission systems offer low cost, high data rate transmission channels, the widespread introduction of B-ISDN depends on the pace of optical subscriber loop installation [17][19][22]. Fiber loops, using laser technology and SONET transport envelopes of 155 Mbps, will be able to carry information cells from the subscriber NT to the CO. Local exchanges must therefore be able to support B-ISDN subscribers using fiber optics, as well as N-ISDN subscribers using twisted-pair connections for basic and primary rate interfaces.

Application of ISDN at Lewis

Lewis Research Center has a wide range of scientific and administrative applications possessing diverse bandwidth requirements. Separate communications infrastructures exist to support telephony, video, and data networking and in many cases all of these infrastructures are extended to each office if not to each Lewis employee. Separate infrastructures cause large-scale duplication of transmission media as well as an inherent division between the often related information carried on these infrastructures. In investigating ISDN, Lewis seeks to find ways of most effectively using its transmission media to provide a diverse set of communications services and enhance the synergistic effects of combining video, data, and voice in integrated applications. Many of the advanced applications such as visualization or distance learning require bandwidths that will not be realized until B-ISDN becomes more prevalent. However, extending lower speed data and telephony services throughout the campus, as well as extending and enhancing these services between NASA centers and cooperative institutions, are within the bandwidth capabilities offered by N-ISDN.

Some of the target applications envisioned and piloted at Lewis include use of N-ISDN technology to provide telephone and LAN services to campus buildings/organizations either too small or transient to warrant more significant equipment investments. Indeed,

once local exchange carrier (LEC) compatibility issues have been resolved, telecommuting functionality could be extended to Lewis employee's homes.

Point to point data services at Lewis have traditionally required the installation of additional media or the use of existing media in finite supply. In many cases telephone service is already available at each endpoint requiring these data services. N-ISDN can integrate low-speed data services onto existing telephone circuits at speeds up to 64 kbps.

Once compatibility and interoperability issues have been resolved, media currently used to interconnect Lewis with local research organizations possessing their own PBXs could be reduced by replacing multiple tie lines with single higher-speed ISDN PRI interconnections, at the same time allowing increased functionality as supplementary services are extended between systems.

Compatibility Issues

Compatibility and interoperability are major concerns at Lewis. At present, the long-distance carriers frequently use ISDN and/or CCS for their own traffic, but the local telephone companies (Ohio Bell in the case of Lewis) do not offer ISDN service and thus form a barrier to the widespread availability of ISDN. Consequently, alternate options are being evaluated, such as bypassing the local carriers via private connections to the long-distance carriers or via NASA's private PSCN WAN and FTS 2000 which will soon provide ISDN to the U.S. Government.

FIGURE 3

Carrier Hierarchy and ISDN Compatibility

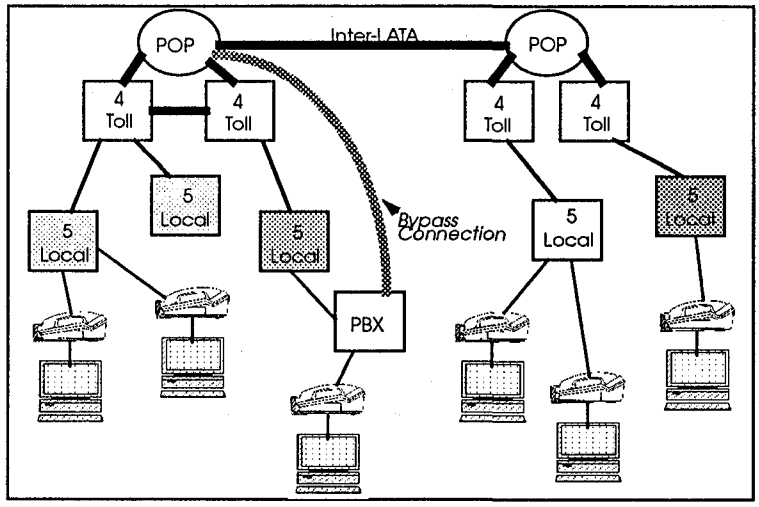

FIGURE 3 shows an example of the lower layers of the telephone carrier hierarchy, both inter-local access and transport area (LATA) and intra-LATA, and the possible incompatibilities which may exist. In this case, an ISDN-capable device may be connected to an ISDN-capable PBX; however, the local central office may not yet be ISDN-capable. If, as mentioned earlier, ISDN is being used at higher layers of the hierarchy, bypass connections may be sought with long-distance service carriers at their Points of Presence (POP).

In addition, the CCITT Recommendations still allow sufficient latitude to allow different and incompatible implementations of BRI and PRI. Currently, two international organizations, the Corporation for Open Systems International (COS) and the North American ISDN Users' Forum (NIU) are working with Bellcore to develop guidelines for CPE to promote greater interoperability. Until such implementation discrepancies are resolved, NT2, TE1, and TA equipment compatibility is often expressed in terms the central office switching equipment with which they will interoperate, sometimes to the extent that switch type has a corresponding switch setting on the CPE.

Pilot Projects and Testing

Potential applications for ISDN within Lewis include not only providing service to "orphan buildings"; those buildings not otherwise served by more conventional LAN techniques, but also:

- providing a backup for the fiber distributed data interface (FDDI) network,
- allowing access to Lewis computer systems from the home,
- replacement of low-speed dedicated circuits,
- and transmitting multiple services via a single digital subscriber line.

In the longterm, B-ISDN will also allow circuit-switched access to high bandwidth services such as videoconferencing and HDTV at affordable prices. B-ISDN is where ISDN is likely to offer the greatest benefit to NASA.

Lewis currently has N-ISDN capability via the Fujitsu F9600 PBX which has recently been upgraded to support BRI as well as PRI compatibility with current AT&T and Northern Telecom central office switches.

The F9600 is currently being used in an ISDN testbed at NASA Lewis. Preliminary experiments with ISDN have been successful. For example, 16 kbps and 64 kbps circuit-switched connections have been used to provide remote access to DEC and IBM computers from a PC while simultaneously using the same connection for a conversation on a digital telephone. The next step will be to interconnect the Lewis testbed with an agency-wide ISDN testbed at NASA Jet Propulsion Laboratories.

FIGURE 4

Lewis ISDN Testing

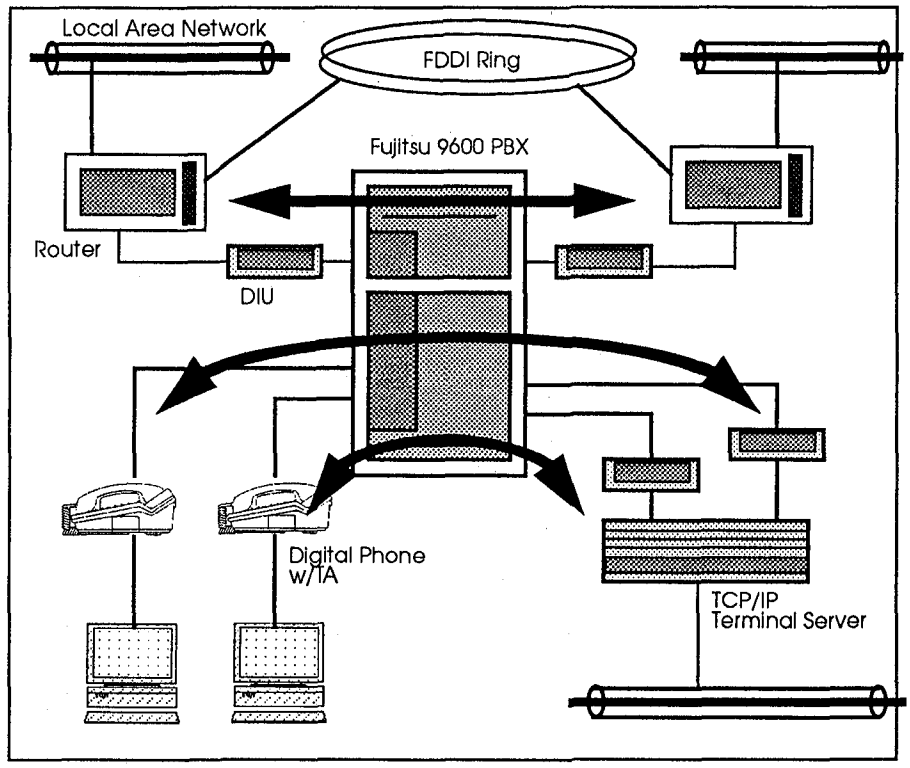

FIGURE 4 depicts some of the pilot projects which have been performed at Lewis. Initial tests included workstation to mainframe connectivity by attaching a PC or workstation to a TA module contained within a Fujitsu digital telephone via an RS-232 cable, and likewise attaching a TCP/IP terminal server to a stand-alone TA. A virtual circuit could then be established between the workstation and TCP/IP terminal server via either an interactive session with the phone-embedded TA, in which the user selects the "telephone number" of the stand-alone TA, or dialing via the telephone's keypad. Once the circuit has been established, the user can then invoke a 19.2 kbps interactive asynchronous terminal session using the facilities of the TCP/IP terminal server. Although this provides some basic service to users which may be in "non-networked" facilities at Lewis, simple terminal session capabilities are, in contrast to normal LAN functionality, rather prohibitive. An alternative is to use the asynchronous service provided by the TAs

to support a serial line protocol such as Serial Line IP (SLIP). For this second test, the same hardware configuration was used; however, the corresponding workstation and terminal server ports are now configured to support a SLIP connection. Enhanced functionality can then be obtained by using workstation/PC applications which can operate over TCP/IP, such as file transfer and electronic mail.

In addition to providing switched low-speed connectivity, higher-speed TAs called Data Interface Units (DIUs) may be used to provide point to point switched 56 kbps circuits. These TAs can replace dedicated point-to-point hardwired circuits and provide an alternative to the installation of new twisted-pair copper media in locations where existing unused telephone wiring may already exist. A proof of concept test was performed interconnecting two multiprotocol routers, each using a high-speed DIU to provide a 56 kbps path across the F9600 PBX. This same configuration could be used to support LAN/router configurations where alternative media may not exist, as a back-up path for a primary high-speed path, or for wide-area network (WAN) connectivity.

Conclusion

In this paper, a study of ISDN technologies and an investigation of the role of ISDN services at NASA Lewis Research Center were described. A detailed survey of ISDN channel types, the BRI and PRI interface structures, and the variety of applications supported by N-ISDN was presented. The reference configurations developed by CCITT to describe the architecture of an ISDN were explained and the locations where various types of equipment interface to an ISDN were identified. Bearer services and teleservices, as well as basic services and supplementary services, were defined. The use of CCS for the transmission of control signals over an ISDN was also briefly discussed.

The costs and performance of circuit switching and packet switching techniques in supporting stream and bursty traffic over ISDN networks were examined and were com-

pared to fast packet switching techniques such as ATM. ATM was developed by CCITT to provide the flexibility needed to transmit services with widely differing bandwidth and delay requirements over B-ISDNs of the future. ATM cells will be transported over optical networks using either the SONET or SDH multiplexing hierarchy.

Until B-ISDN arrives to support Lewis' more bandwidth intensive requirements, N-ISDN can provide a degree of service integration over existing media within the center. Pilot projects involving Lewis' PBX have demonstrated several potential applications including terminal-to-computer connectivity, low-speed TCP/IP network access and 56 kbps point to point data services. In addition to providing services to "orphan" or remote buildings, N-ISDN will allow Lewis personnel to extend voice, data, and compressed video services to any area that is wired for phone service.

As ISDN capabilities become more pervasive in the LEC's central office, Lewis will support BRI connections from staff members' homes. BRI may also be used for providing service to local technical meetings and conferences at nearby conference centers. PRI service will be used to interconnect the extended Lewis environment through MAN and WAN connectivity, enhancing shared research endeavors.

The largest impact from ISDN at Lewis Research Center will come from the implementation of B-ISDN as an enabling technology enhancing collaborative research projects through simultaneous visualization of analytic modeling solutions by multiple investigators, and sharing real time experimental test cell results among all participants. Related technologies such as high definition television (HDTV) will enable researchers to observe and participate in Lewis-sponsored, cooperative experimental efforts.

High-performance networking such as B-ISDN will allow collaborative research initiatives to be shared world-wide as the impediments of distance and time are diminished. The networking conduit will be first N-ISDN, followed rapidly by B-ISDN. The plain

old telephone service of today will evolve through the 1990s to become the broadband integrated services digital network of the next decade.

REFERENCES

[1] J. Bellamy, *Digital Telephony, Second Edition*, New York: Wiley, 1991.

[2] P. Bocker, *ISDN, The Integrated Services Digital Network: Concepts, Methods, Systems*, New York: Springer-Verlag, 1988.

[3] S. M. Boyles, R. L. Corn, and L. R. Moseley, "Common Channel Signaling: The Nexus of an Advanced Communications Network," *IEEE Communications Magazine*, vol. 28, no. 7, pp. 57-63, July, 1990.

[4] W. R. Byrne, T. A. Kilm, B. L. Nelson, and M. D. Soneru, "Broadband ISDN Technology and Architecture," *IEEE Network*, vol. 3, no. 1, pp. 23-28, January, 1989.

[5] D. J. Eigen, "Narrowband and Broadband ISDN CPE Directions," *IEEE Communications Magazine*, vol. 28, no. 4, pp. 39-46, April, 1990.

[6] M. Frame, "Broadband Service Needs," *IEEE Communications Magazine*, vol. 28, no. 4, pp. 59-62, April, 1990.

[7] R. R. Goldberg and D. C. Shrader, "Common Channel Signaling Interface for Local Exchange Carrier to Interexchange Carrier Interconnection," *IEEE Communications Magazine*, vol. 28, no. 7, pp. 64-71, July, 1990.

[8] J. M. Griffiths, *ISDN Explained: Worldwide Network and Applications Technology*, New York: Wiley, 1990.

[9] R. Handel, "Evolution of ISDN Towards Broadband ISDN," *IEEE Network*, vol. 3, no. 1, pp. 7-13, January, 1989.

[10] H. J. Helgert, *Integrated Services Digital Networks: Architectures, Protocols, Standards*, Reading: Addison- Wesley, 1991.

[11] B. Jabbari, "Common Channel Signalling System Number 7 for ISDN and Intelligent Networks," *Proceedings of the IEEE*, vol. 79, no. 2, pp. 155-169, February, 1991.

[12] S. Kano, K. Kitami, and M. Kawarasaki, "ISDN Standardization," *Proceedings of the IEEE*, vol. 79, no. 2, pp. 118-124, February, 1991.

[13] T. J. Kearns and M. C. Mellon, "The Role of ISDN Signaling in Global Networks," *IEEE Communications Magazine*, vol. 28, no. 7, pp. 36-43, July, 1990.

[14] L. Kleinrock, "ISDN-The Path to Broadband Networks," *Proceedings of the IEEE*, vol. 79, no. 2, pp. 112-117, February, 1991.

[15] F. K. Marr, "Signaling System No. 7 in Corporate Networks," *IEEE Communications Magazine*, vol. 28, no. 7, pp. 72-77, July, 1990.

[16] A. R. Modarressi and R. A. Skoog, "Signaling System No. 7: A Tutorial," *IEEE Communications Magazine*, vol. 28, no. 7, pp. 19-35, July, 1990.

[17] K. Murano, K. Murakami, E. Iwabuchi, T. Katsuki, and H. Ogasawara, "Technologies Towards Broadband ISDN," *IEEE Communications Magazine*, vol. 28, no. 4, pp. 66-70, April, 1990.

[18] J. Ronayne, *The Integrated Services Digital Network: from Concept to Application*, New York: Wiley, 1988.

[19] R. Snelling, J. Chernak, and K. Wilson Kaplan, "Future Fiber Access Needs and Systems," *IEEE Communications Magazine*, vol. 28, no. 4, pp. 63-65, April, 1990.

[20] W. Stallings, *Data and Computer Communications, Third Edition*, New York: Macmillan, pp. 697-751, 1991.

[21] W. Stallings, *ISDN and Broadband ISDN, Second Edition*, New York: Macmillan, 1992.

[22] I. Toda, "Migration to Broadband ISDN," *IEEE Communications Magazine*, vol. 28, no. 4, pp. 55-58, April, 1990.

[23] W. Wu and A. Livne, "ISDN: A Snapshot," *Proceedings of the IEEE*, vol. 79, no. 2, pp. 103-111, February, 1991.

GLOSSARY

ANI	Automatic Number Identification
ANSI	American National Standards Institute
ATM	Asynchronous Transfer Mode
AT&T	American Telephone and Telegraph
BRI	Basic Rate Interface
B-ISDN	Broadband-ISDN
CATV	Cable Television
CCITT	International Telephone and Telegraph Consultative Committee
CCS	Common Channel Signalling
CCSN	Common Channel Signalling Network
CO	Central Office
COS	Corporation for Open Systems
CPE	Customer Premises Equipment
CPI	Customer Premises Installation
DIU	Data Interface Unit
DS	Digital Section
DS-1	Digital Signal - 1
DSL	Digital Subscriber Loop
DTS	Digital Transmission System
EIA	Electronic Industries Association
ET	Exchange Termination
FCC	Federal Communications Commission
FDDI	Fiber Distributed Data Interface
FDX	Full-duplex
FPS	Fast Packet Switching
FTS	Federal Telecommunications System
Gbps	Giga-bits per second
HDLC	High-level Data Link Control
HDTV	High-Definition Television
IDN	Integrated Digital Network
IEEE	Institute of Electrical and Electronics Engineers
IEN	Interexchange Network
ISDN	Integrated Services Digital Network
ISO	International Standards Organization
JPL	Jet Propulsion Lab
kbps	Kilo-bits per second
LAN	Local Area Network
LAP-B	Link Access Protocol - Balanced
LAP-D	Link Access Protocol - D channel
LATA	Local Access and Transport Area

LEC	Local Exchange Carrier
LET	Logical Exchange Termination
LINK	Lewis Information Network
LT	Line Termination
MAN	Metropolitan Area Network
Mbps	Mega-bits per second
NASA	National Aeronautics and Space Administration
NIU	North American ISDN Users' Forum
NT	Network Termination
N-ISDN	Narrowband-ISDN
OC	Optical Carrier
OSI	Open Systems Interconnection
PBX	Private Branch Exchange
PCM	Pulse Code Modulation
PH	Packet Handler
POP	Point of Presence
PRI	Primary Rate Interface
PSCN	Program Support Communications Network
PSIEN	Packet-Switched Inter-Exchange Network
PSN	Packet-Switched Network
SAN	Subscriber Access Network
SDH	Synchronous Digital Hierarchy
SLIP	Serial Line Internet Protocol
SONET	Synchronous Optical Network
SS7	Signalling System Number 7
STM	Synchronous Transfer Mode
STS	Synchronous Transport Signal
TA	Terminal Adaptor
TCP/IP	Transmission Control Protocol/Internet Protocol
TDM	Time Division Multiplexing
TE	Terminal Equipment
UNI	User Network Interface
VC	Virtual Circuit or Virtual Channel
VP	Virtual Path
WAN	Wide Area Network

REPORT DOCUMENTATION PAGE

Form Approved
OMB No. 0704-0188

1. AGENCY USE ONLY *(Leave blank)*

2. REPORT DATE
October 1992

3. REPORT TYPE AND DATES COVERED
Technical Memorandum

4. TITLE AND SUBTITLE
ISDN at NASA Lewis Research Center

5. FUNDING NUMBERS

6. AUTHOR(S)
Catherine Murphy Bakes, Fredric Goldberg, and Steven W. Eubanks

7. PERFORMING ORGANIZATION NAME(S) AND ADDRESS(ES)
National Aeronautics and Space Administration
Lewis Research Center
Cleveland, Ohio 44135–3191

8. PERFORMING ORGANIZATION REPORT NUMBER
E–7388

9. SPONSORING/MONITORING AGENCY NAMES(S) AND ADDRESS(ES)
National Aeronautics and Space Administration
Washington, D.C. 20546–0001

10. SPONSORING/MONITORING AGENCY REPORT NUMBER
NASA TM–105911

11. SUPPLEMENTARY NOTES
Catherine Murphy Bakes, Kent State University, Kent, Ohio 44242, and Summer Faculty Fellow at NASA Lewis Research Center. Fredric N. Goldberg and Steven W. Eubanks, Lewis Research Center. Responsible person, Fredric N. Goldberg, (216) 433–5074.

12a. DISTRIBUTION/AVAILABILITY STATEMENT
Unclassified - Unlimited
Subject Category 62

12b. DISTRIBUTION CODE

13. ABSTRACT ***(Maximum 200 words)***
The work described in this paper is an expository investigation of the potential impact of ISDN at NASA Lewis Research Center. To properly frame the subject, the paper contains a detailed survey of the components of Narrowband ISDN. The principles and objectives are presented as decreed by the CCITT. The various channel types are delineated and their associated service combinations are described. The subscriber-access network functions are explained pictorially via the ISDN reference configuration. A section on switching techniques is presented to enable the reader to understand the emergence of the concept of fast packet switching. This new technology is designed to operate over the high bandwidth, low error rate transmission media that characterizes the Lewis environment. A brief introduction to the next generation of networks is covered with sections on Broadband ISDN (B-ISDN), Asynchronous Transfer Mode (ATM), and Synchronous Optical Networks (SONET). Applications at Lewis are presented, first in terms of targets of opportunity, then in light of compatibility constraints. In-place pilot projects and testing are described that demonstrate actual usage at the Research Center.

14. SUBJECT TERMS
Integrated services digital networks; Broadband ISDN; Telecommunications networks; Private branch exchange; Synchronous optical network

15. NUMBER OF PAGES
38

16. PRICE CODE
A03

17. SECURITY CLASSIFICATION OF REPORT
Unclassified

18. SECURITY CLASSIFICATION OF THIS PAGE
Unclassified

19. SECURITY CLASSIFICATION OF ABSTRACT
Unclassified

20. LIMITATION OF ABSTRACT

National Aeronautics and
Space Administration

Lewis Research Center
Cleveland, Ohio 44135

Official Business
Penalty for Private Use $300

FOURTH CLASS MAIL

ADDRESS CORRECTION REQUESTED

U.S.MAIL

Postage and Fees Paid
National Aeronautics and
Space Administration
NASA-451

NASA