E-7327

NASA Technical Memorandum 105270

Fabrication of Composite Propfan Blades for a Cruise Missile Wind Tunnel Model

E. Brian Fite
Lewis Research Center
Cleveland, Ohio

April 1993

NASA

FABRICATION OF COMPOSITE PROPFAN BLADES FOR A CRUISE MISSILE WIND TUNNEL MODEL

E. Brian Fite
National Aeronautics and Space Administration
Lewis Research Center
Cleveland, Ohio 44135

SUMMARY

This report outlines the procedures that were employed in fabricating prototype graphite-epoxy composite propfan blades. These blades were used in wind tunnel tests that investigated propfan propulsion system interactions with a missile airframe in order to study the feasibility of an advanced-technology-propfan-propelled missile. Major phases of the blade fabrication presented include machining of the master blade, mold fabrication, ply cutting and assembly, blade curing, and quality assurance. Specifically, four separate designs were fabricated, 18 blades of each geometry, using the same fabrication technique for each design.

INTRODUCTION

The U.S. Department of Defense (DOD), through the Navy and the Air Force, is investigating advanced propulsion technologies for the next generation of cruise missiles. One of the technologies being investigated for future cruise missile propulsion is the advanced unducted propfan. An unducted propfan is an ultra-high-bypass engine that passes 30 times more air past the external propfans than it passes internally through the combustor. In this engine design the fans are located outside of the engine. The system used in this study was a two-stage counterrotating propfan system that has two adjacent rows of propfan blades rotating in opposite directions (fig. 1). The aft row recovers the swirl generated by the forward row and results in higher efficiency relative to a single row of rotating propfan blades. This propulsion system is expected to improve efficiency by 20 to 30 percent over the turbofan engines it would replace. In support of this technology evaluation a joint DOD/NASA wind tunnel test project, the Propfan Missile Interactions Project, was initiated to design and evaluate the installed characteristics of propfan blades on a 0.55-scale cruise missile model in a NASA wind tunnel.

The lead center for the DOD on this project was the Naval Air Warfare Center–Weapons Division (NAWC–WPNS) in China Lake, California. The project was completed through a cooperative agreement between the DOD and NASA's Ames and Lewis Research Centers. Ames Research Center was responsible for the design and fabrication of the wind tunnel model as well as testing the model in their 14-Foot Transonic Wind Tunnel. The Lewis Research Center was responsible for the design and fabrication of the composite propfan blades. This report describes the procedure used to fabricate the propfan blades for the wind tunnel test. The appendix includes additional information on testing and quality assurance procedures that were performed during, and some after, the blades were fabricated.

The objective of the wind tunnel test was to evaluate propfan performance and suitability for its consideration as a viable propulsion option for next-generation cruise missiles. Two propfan designs were selected for testing, a low-rpm blade design, which was designated CM–1D, and a high-rpm design, which was designated CM–2D. Figure 2 presents a CM–1D aft blade. The CM–2D blade construction was identical to the CM–1D with only dimensional differences in span and chord. Both blades were aerodynamically and structurally designed at NASA Lewis (refs. 1 and 2) and were fabricated from graphite-epoxy composite material. Polymer matrix composites are used in the fabrication of propfan blades because the material properties can be tailored to suit the design specifications of the propfan. Frequencies can be tailored by changing ply stacking angles to change the blade dynamic characteristics (refs. 3 and 4) or the aeroelastic response (ref. 5).

The 0.003-in.-thick composite material that was used to fabricate the propfan blades for the cruise missile model was supplied by ICI Fiberite, Inc., of Winona, Minnesota, in a prepreg form. "Prepreg" refers to a ribbon or mat of fibers that has been preimpregnated with the resin system. The prepreg resin was a 250 °F curing epoxy, and the fiber was T300 graphite, Fiberite part number Hy-E 3048A1E (ref. 6). The selection of epoxy curing temperature is determined by the maximum material service temperature. The low operating temperature of the wind tunnel testing environment allowed for the use of the low-temperature epoxy material.

For completeness, some composite terminology used throughout this report will be defined. A ply, or lamina, is a single layer of the composite material. A stack of plies, usually with a specific stacking sequence, is called a laminate. The primary components of each blade are formed by separately stacking pressure-side plies and suction-side plies. Each of these stacks is called a preform. When the preforms are assembled to form a complete blade prior to molding, this is called a blade preform. The blade preform consists of the graphite-epoxy plies that make up the airfoil, any filler or specialized plies that are necessary, and a metal shank shell at the blade base.

The blades that were fabricated for the cruise missile model were an all-composite construction. This means there was no metal spar extending spanwise into the interior portion of the blades as with many past blade designs (refs. 7 and 8). The entire blade, except for the base region, was made of composite plies stacked to form an airfoil. Both the CM–1D and CM–2D blade designs used a metal shank shell at the blade base to transfer the blade centrifugal loads into the hub retention system (fig. 2). The metal shell was necessary because of the high compressive loads at the blade/hub interface. The components needed to fabricate a blade are shown in figure 3. They are, from left to right, outer filler plies, called thumb plies; interface plies, called mushroom plies; the suction-side preform; a shank shell; the pressure-side preform; mushroom plies; and thumb plies. The thumb plies and mushroom plies have the same geometry for both sides of the blade. The six composite pieces were stacked together and the composite tab was inserted into the shank shell. The composite tab refers to the square portion of the pressure- and suction-side plies, mushroom plies, and thumb plies that extended from the base of the respective component to transition into the shank shell. This assembly was placed in a mold and the tab was then separated at the pressure-side/suction-side interface. Loose, chopped graphite prepreg was packed between the separated halves of the tab. A cross section showing the various regions of material in a finished blade is shown in figure 4.

The fabrication process involved several steps that are shown schematically in figure 5. The process was initiated by machining a metal "master blade" from the computer-aided-design-generated (CAD) geometry data base. This machined master blade was used to fabricate split molds from a castable tooling compound. The two-part molds were used to form all the graphite-epoxy blades. Ply templates were made and used to hand cut the graphite-epoxy material into plies that were then stacked to create a blade preform. The mold was loaded with a blade preform, and a hydraulic press applied pressure and temperature in a specified manner to cure the blade. Once molded, the blades were de-flashed, inspected, and prepared for installation in the wind tunnel model.

BLADE MOLD AND COMPONENT FABRICATION

Master Blade Machining

The master blades were machined on a three-axis numerical control (NC) milling machine. The cutter paths were determined from a CAD three-dimensional geometry model. Figure 6 displays a completed CM–1D forward master blade. The material used for the master blade was selected on the basis of many design factors, such as machinability, stability, fixturability, coefficient of thermal expansion, stiffness, and durability. The material should be easily machinable yet be stiff and durable to permit handling without bending easily. The material must also be stable to maintain the proper aerodynamic shape once machining is completed. A low coefficient of thermal expansion was desired to allow the master to be postcured, in subsequent operations, along with the castable tooling compounds that were used to make the molds. On the basis of these considerations the material selected for the CM–1D and CM–2D master blades was leaded steel.

The surfaces required to generate the cutter paths were created by computer-augmented design and manufacturing (CADAM). Figure 7 presents a master blade fixtured in the machine tool ready for machining. Blade fixturing was accomplished with the large material bosses at the base and tip of the blade. The bosses remained an integral part of the blade until all rough machine cuts were made on the airfoil. A flat plate was bolted to each of these bosses to maintain torsional rigidity during fabrication. Set screws, which are visible in the tip area of the flat plate, were used to support the thin sections of the airfoil in order to minimize tool pressure deflections. The blade was inspected prior to final machining cuts and the computer numerical control (CNC) program was adjusted to provide a 0.002-in.-cross-sectional profile match with the CAD model.

Mold Fabrication

Two different molds were used to fabricate the composite blades. A blade-base filler mold was used to accurately form the filler pieces, or thumb plies, into a preform. The filler mold is shown in figure 8. Subsequently, a second mold was used to form and cure the graphite-epoxy blade preform into a finished blade. A finished blade mold for the CM–1D blade is shown in figure 9. The CM–1D mold shown was typical of all the molds that were fabricated to make both the CM–1D and CM–2D composite blades. In all mold fabrication steps a release agent was applied to the metal master blade to prevent adhesion to the tooling compounds. The following paragraphs describe the fabrication of both the filler mold and the blade mold.

Blade-base filler mold.—For repeatability of blade-to-blade structural integrity and dynamic uniformity, a mold was required to assemble the thumb ply filler pieces at the blade base. The filler material provided a transition between the square tab at the blade base and the shank shell inner diameter. This region was critical in obtaining high pull strength for the blades. Pull strength was critical because a safety factor of 5 was required by the NASA Ames safety specifications. In order to obtain consistently high pull strengths, the filler regions were fabricated in a manner that provided a high degree of consistency with respect to material orientation and compaction. In order to facilitate a repeatable method of producing the filler pieces, the master blade was used to cast a female half for the blade-base filler mold. Any stable, low-temperature castable tooling compound can be used for this mold because it does not require elevated-temperature capability. A corresponding male half was poured for use in compressing and forming the filler plug. The male portion of this mold had relief in the shank region that was equal to the volume of the filler material which was cut to fill the region between the airfoil tabs and the wall of the shank shell. Pins were utilized to ensure proper alignment during the filler compression operation.

Blade mold.—In order to fabricate the blade mold, castable tooling compounds were poured around the master blade. In comparison to machining metal molds, this method provided economical mold replacement or fabrication of multiple molds if required. The castable tooling compound consisted of Devcon Steel Filled Liquid and Furane Epocore F, an aluminum filler. The aluminum filler is supplied in random sized and shaped needles. The needles improve heat transfer characteristics and add strength. The Devcon-needle combination provided reasonable durability, minimal shrinkage, and good heat transer properties.

Each mold was composed of a male and female half. Each half was attached to an aluminum backing plate, and an embedded thermocouple was included for monitoring mold temperature near the blade/mold interface. The male half of the mold was poured first. The master blade was positioned on a base to serve as a working surface and was supported with wooden blocks and potting compound (fig. 10). The blade was positioned so that the finished mold parting line had minimal potential for capturing the blade in the mold. In particular, a molded blade had to be able to be removed from the mold by lifting the blade in a vertical direction. This had to be taken into account when determining the blade orientation for proper mold operation. Once the blade had been fixtured in the appropriate position, wooden dams were fabricated to match the leading edge, trailing edge, tip, and base contours. These dams were used to surround the blade as shown in figure 11. Release film, 0.004-in.-thick Teflon, was applied to the blocks and to the master blade surface in order to prevent adhesion to the cured Devcon. The film on the blocks also served to provide a 1° to 1.5° drag to allow for resin bleed and to provide for mold separation. Next, the cavity formed by the blocks was filled with the Devcon mixture.

An initial gel-coat layer of Devcon was carefully applied, by brush, to the master blade surface and wooden dams in order to ensure thorough coverage in tight corners. Filler needles were not used in the gel coat. This step prevented the possibility of the needles breaking through the mold surface. These needles, if present on the finished mold surface, print through to the final part and are a cosmetic problem and possibly an aerodynamic concern. Once the gel coat was applied, a mixture of Devcon and aluminum needles was used to fill the remaining volume of the male portion of the mold. At the appropriate level of mold fill, a thermocouple was embedded in the mold in close proximity to the mold/blade interface, approximately 0.25 in., to allow temperature monitoring during the blade curing cycle. The form was then filled to the top of the wooden dam structure with the Devcon-needle mixture. A bead-blasted aluminum plate, employing flathead fasteners as anchors, was then installed on top of the Devcon pour as shown on the right in figure 12. The flatheads were forced down into the Devcon–aluminum needle mixture, providing a high-strength bond between the backing plate and the cast mold. A finished male mold half is shown in figure 13. This half was allowed to cure at room temperature for 24 hr.

A similar procedure was used to pour the female half of the mold by using wooden dams at the outermost periphery of the mold as shown on the left side of figure 12. The master blade was not separated from the male mold half prior to pouring the female mold half in order to ensure proper alignment of the finished mold. The female mold half was poured and an aluminum backing plate was attached coinciding with the male-half backing plate orientation. A thermocouple was also placed in the female mold half to monitor temperature during blade molding. The mold assembly was allowed to cure at room temperature for 24 hr. With both mold halves poured and allowed to cure at room temperature, and the master blade still in place, the entire assembly was placed in an oven for a postcuring cycle. Once the mold was postcured, the halves were separated to reveal the mold surface. The surface to be in contact with the graphite-epoxy blades was visually inspected for absence of aluminum needles and for a smooth surface. A mold that was found to contain defects was refabricated.

Ply Cutting and Layup Procedures

With the necessary molds complete the graphite-epoxy prepreg material was cut in specified shapes to form the blade preforms, which were cured in the molds. The primary blade material was a unidirectional graphite-epoxy tape, part number Hy-E 3048A1E, that was manufactured by ICI Fiberite, Inc. The material used was a 12-in.-wide tape with a cured ply thickness of 3 mils (0.003 in.). The composite tape was delivered in a roll approximately 400 ft long. The rolls of material were stored in air-tight plastic bags and placed in a freezer. The material was removed from the freezer and allowed to reach room temperature before it was removed from the plastic bags in order to prevent moisture condensation on the material. (Moisture is a concern because it is absorbed by epoxy resins and will cause a reduction in cured material properties and also interfere with the cure of the material system because water vapor will be released when the cure is taking place.) A heavy paper backing was used as a carrier for the graphite-epoxy prepreg. The paper served to keep the materials separated and provided a surface for identifying plies as they were cut from the material roll. The material was relatively difficult to cut because of the tackiness of the resin and the hardness of the graphite fibers. Hand shears were used to cut the material. Gloves were always used to handle the material in order to prevent skin reactions and material contamination.

By using a CAD data base of ply template geometry, metal templates were cut from 1/16-in.-thick sheet steel by using a water knife. A water knife uses a high-pressure water jet, often containing abrasive grit, to cut raw materials to desired shapes. The cutting head is CNC controlled and can cut intricate shapes with reasonable accuracy. For a description of the generation of CAD ply template geometry, see reference 2. The metal templates served to expedite the process of tracing ply template geometries onto the backing paper of the graphite-epoxy material. A template is shown in figure 14. Plies were cut from the sheet of graphite-epoxy with hand cutters (fig. 15). The ply stacking position was marked on the backing paper, which remained attached to the cut ply. Once cut and marked, the pressure- and suction-side plies were placed in plastic bags. The plies were stored in a freezer until ready for stacking.

The blade plies were stacked by using a ply stacking fixture that was specifically designed for each blade geometry. Figure 16 shows a technician stacking plies in a fixture for the CM–2D blade. The plies were stacked starting with the innermost ply and working out to the airfoil surface ply, for both the pressure and suction sides. Ply angle alignment relative to the blade was accomplished by placing the base section of each ply squarely against a Plexiglas block at the fixture base. The stacking fixture also provided a visual check of the ply placement through a Teflon-coated, color-coded stacking guide. Once stacked, the two blade halves, or preforms, were placed in a plastic bag and stored in a freezer until molded. Figure 17 shows typical pressure- and suction-side preforms. The ply dropoffs on the interior of the preform are visible in the figure.

After a series of pull tests of different prototype blade configurations, it was determined that minor blade fabrication changes were necessary to meet the NASA Ames pull test criterion of 5000 lb. In order to improve pull strength, additional transition plies were required at the blade base on the airfoil surface. Thumb and mushroom plies, as previously defined, were added to serve as a transition region between the blade's tab and the inner diameter of the shank shell. By using the filler mold as a fixture, these plies were stacked starting with the smallest thumb ply and ending with the largest mushroom ply. This placed the smaller plies adjacent to the shank shell and the larger plies adjacent to the airfoil outermost ply and provided a smooth load transition and hence a higher pull strength. Figure 18 shows the thumb plies being formed in the blade-base filler mold. The overall blade geometry was not changed by adding these extra plies because a closed mold was used. However, the fiber-volume ratio was locally higher in areas where thumb and mushroom plies were added.

Shank Shell

The shank shell (fig. 19) provided a transition between the composite blade and the metal hub on the wind tunnel model. The shell was fabricated of 17–4PH stainless steel. A broach and a hydraulic press were used, as shown in figure 20, to score the inner diameter of the shell. This was done to increase both bonding area and torsional bond line strength. After broaching, the shell was chemically cleaned by placing it in a solution of 15 percent nitric acid, 4 percent hydrofluoric acid, and 81 percent distilled water. The shell was removed after 10 min and rinsed in distilled water. The shell was dried and coated with a thin layer of the Fiberite 948A1 resin to preserve the surface cleanliness and promote adhesion to the prepreg. The shell was stored in the freezer until final assembly with the blade preform components prior to molding. The shell, like the uncured prepreg material, was handled with gloves to prevent skin contact and shell bond surface contamination.

Blade Component Assembly

All of the components necessary to assemble a blade were now available. The shank shell, the mushroom plies, and the thumb plies were all stored in a common plastic bag and called a blade-base assembly kit (BBAK). The blade pressure- and suction-side plies, along with a BBAK, were assembled to create the entire blade preform. The plastic bag containing a BBAK and the bag of pressure- and suction-side preforms was removed from the freezer and allowed to reach room temperature prior to exposing the materials to the atmosphere. This was done to prevent moisture condensation on the blade components for the same reasons as were discussed for the ply cutting phase of the blade fabrication.

Next, the transition filler plies (i.e., mushroom and thumb plies) were assembled with the appropriate side of the airfoil plies for both the pressure- and suction-side preforms. One preform, either the pressure or suction side—depending on the blade surface corresponding to the female mold half—was placed in the female mold and the remaining side was positioned on top of the first. The mold was used as a guide to properly align the pressure- and suction-side preforms. The male half of the mold was assembled with the female half, and a clamp was applied to hold the assembly together while attaching the shank shell.

In order to assemble the shank shell, the mold was turned on end with the blade base facing upward. A shell was placed over the exposed tabs of the airfoil and filler plies. The shell was slid onto the composite tab until it bottomed on the shell seating surface (visible in fig. 9) within the mold. The exposed end tabs of the propfan blade were separated at the blade midplane, and each half of the composite tab was forced to conform to the inner diameter of the shell. A cone-shaped void resulted between the separated halves of the tab. This void was filled with randomly oriented, chopped, graphite-epoxy prepreg material. This region of the blade is shown in figure 4. Care was taken not to buckle fibers while completing this phase of the assembly. The bottom was completely filled and any excess filler was trimmed with a razor knife. Once the bottom had been trimmed, the blade preform was completely assembled and ready for molding.

BLADE MOLDING

Overview and Equipment

The final step in fabricating the composite blade was the molding process. The blades were compression molded in a closed die by using a hydraulic press with heated platens (fig. 21). The temperature and closure rates of the press were controlled by the fabricator. These parameters were varied to adjust the curing characteristics in order to account for both the composite material resin and the part geometry. The press used had a platen size of approximately 2.5 ft by 2.5 ft. Each upper and lower platen contained strip heaters for applying the temperature profile that was programmed into a digital controller. The temperature of each platen was controlled independently. The closure rate was controlled by an analog, drum type of controller. The closure curve for the system was scribed onto a conductive medium and placed on the rotating drum of the controller. The controller applied hydraulic pressure, through a servovalve, to control the platen position and thus the closure rate for the mold. Feedback of the platen position was through a linear variable differential transducer (LVDT) that was mounted at a stationary location on the press. A digital position readout was provided and was accurate to four decimal places. Once closed, the platens remain closed for 2 hr while polymerization of the resin system was completed at 250 °F. The temperatures of the upper and lower platens, along with the upper and lower mold temperatures, were monitored during the closure and during the cure.

Once cured, the blades were removed from the mold and placed immediately in a postcuring oven at 250 °F for at least 4 hr. The oven is shown on the right of the press in figure 21.

Process

The resin system used for the cruise missile blades was a 250 °F curing epoxy system made by ICI Fiberite, Inc. of Winona, Minnesota. This system was selected on the basis of the projected tunnel maximum operating temperature (150 °F), availability, and past experience. Most NASA Lewis in-house blade fabrication experience was gained while using this system. Past blade surface finish and mechanical properties, along with the fabrication and processing data base that existed, made the Fiberite 948A1 resin system the logical choice for this project. Curing cycles from previous blade projects were selected and used to fabricate sample plates for property and surface finish evaluation. Some adjustments to the processing were required to account for part and mold geometry, but the existing curing cycles provided a good starting point for the refinement of the curing process.

The closure rate for the platens, which apply pressure to the part being fabricated, and the platen temperature profile are interrelated. The resin system curing rheology determines the proper combination of heatup rate and pressure application for a particular resin system. This is presented graphically in figure 22. The cross-hatched band in the figure represents the pressurization window for a typical resin system. The manufacturer's recommendations for a curing cycle were followed initially. The final curing cycle was determined experimentally by trial and error or by using data from resin thermal analysis techniques. The difference between initial and final curing cycles is generally small but depends on the type of material being processed, the material age, and environmental considerations during cure.

The CM-1D and CM-2D curing cycle consisted of a 15-min closure curve begun when the mold temperature had reached 230 °F. The initial mold gap was approximately 0.040 in. The initial mold gap is the distance between mold halves when they are loaded with a preform and the press platens are closed to make initial contact with the mold backing plates. The thermal profile was monitored and a target range of 4 to 6 deg F/min was achieved for mold heating to 230 °F. This rate was also achieved during subsequent heating to the 250 °F molding temperature. The pressure applied to the platens was controlled so that the part experienced a maximum of approximately 100 psi during closure and cure of the propfan. The mold temperature and mold closure distance profiles are presented graphically in figure 23.

BLADE FINISHING OPERATIONS

Once the blade was molded and postcured, some flash remained along the periphery of the airfoil surface at the mold parting line. This flash was carefully trimmed and the edges lightly sanded. The final blade weight was recorded for use in blade placement within the hub and for quality control. The average standard deviations in blade weight for the CM–1D and CM–2D blades were 0.378 and 0.206 g, respectively. (Average blade weight was 43.27 g for CM–1D blades and 34.71 g for the CM–2D blades.) The blades were polished with a buffing wheel, using only the residual compound in the buffing pad, and the airfoil serial number was acid etched onto the stainless steel shank shell. No additional finish coats were necessary because the required smooth aerodynamic surface was obtained through close control of the curing process.

SUMMARY OF RESULTS

In support of a joint DOD/NASA Propfan Missile Interactions Project, two sets of graphite-epoxy, counterrotating propfan blades were successfully fabricated for a cruise missile wind tunnel model to be tested at the NASA Ames Research Center. The propfan blades were fabricated by using 0.003-in.-nominal-thickness plies composed of T300 fiber and a 250 °F curing epoxy resin. A compression molding process was utilized to mold the blades into their final geometry. In all, 72 propfan blades were fabricated for use in the wind tunnel test, 36 CM–1D blades and 36 CM–2D blades. The wind tunnel model rotor contained 12 blades in a full set, 6 forward blades and 6 aft blades. The fabrication of the cruise missile blades utilized technology that had been developed for use on NASA advanced propeller projects that were begun in the late 1970's. The blade fabrication technology is general in nature and can be applied to many types of composite structures. The Propfan Missile Interactions Project successfully achieved testing program objectives while using the composite propfan blades that were fabricated as described in this report.

ACKNOWLEDGMENT

The author wishes to express gratitude and admiration for the efforts of the Fabrication Support Division and particularly Joseph Kerka, Herbert Stannert, and Nick Wolansky. They worked diligently to develop the methodology needed to fabricate the composite propfan blades. Their efforts were significant in the overall success of this project.

APPENDIX—TESTING AND QUALITY ASSURANCE PROCEDURES

Master Blade Inspection and Inspection Equipment

A Pratt & Whitney model 128 automatic turbine blade plotter was used to perform dimensional inspection of the metal master blades and the molded composite blades. This machine plots cross sections of airfoil shapes in 3×, 5×, 10×, or 20× enlargement ratios. The blade was mounted on a rotating table that used a tracing disk to follow the blade contour. The tracing disk did not contact the blade, and the gap between the disk and the blade surface was maintained by a constant potential spark across the gap for controlling the tracer-control servomotor. A piece of Mylar was mounted on a corresponding table. The two tables, one for the airfoil and one for the Mylar, rotated synchronously. A pen mounted on an oscillating arm swung in a 100° arc. As the two tables rotated, the successive arcs traced out the blade cross-sectional profile. Further information on this machine can be obtained in reference 9. Figure 24 (upper right corner) shows a typical blade mounted in the inspection machine. The technician is setting the height of the tracing disk to a specified blade cross section. The lower lefthand part of the photograph shows the final cross-sectional tracing being compared with the master from the CAD system.

Four separate spanwise cross sections were plotted for each master blade at an enlargement ratio of 10 times actual blade size. These plots were then placed over a two-dimensional CADAM Mylar master, and the appropriate spanwise cross section was generated from the three-dimensional surface model that was used for the NC machining. By comparing the two blade cross sections, the profile dimensional deviations at a particular spanwise location were determined. This method of inspection was used in the preliminary NC machining, which was discussed previously, to evaluate tooling deflections and fixturing methods. This evaluation was done to determine if the tooling and fixturing methods were adequate to achieve the required surface accuracy (profile tolerances). The same procedure was then used to inspect the finished master blades before and after final polishing. The spanwise locations of the cross sections that were inspected, and some of the results of the inspection for the CM–1D forward and aft master blades, are shown in table I. The inspection data for the CM–2D forward and aft master blades are shown in table II.

Composite Propfan Dimensional Inspection

All of the composite propfan blades were also dimensionally inspected by using the Pratt & Whitney model 128 plotter. One cross section, the beta 3/4 cross section, was plotted for each blade fabricated. The spanwise location for the beta 3/4 cross section was found by multiplying the blade tip radius by 0.75. On five blades of each geometry, two additional cross sections were plotted at different spanwise locations. All cross sections were plotted at an enlargement ratio of 10×. The comparison and the method for determining the surface variations were completed in the same manner as for the metal master blades. The spanwise locations of the cross sections that were inspected and a summary of inspection results for the CM–1D composite propfan blades are shown in table III. The inspection summary for the CM–2D composite propfan blades is shown in table IV. The blade data included in table III are from blades 3, 9, 15, 21, and 25. (The 5 to 35 percent chord data were not included for blade 25 at the tip section location because they deviated greatly from the other blade data.) The blade data included in table IV are from blades 5, 9, 15, 21, and 25. (The CM–2D aft blade 21 data were not available and therefore only four sets of data were used for table IV(b).) All of the spanwise locations were measured from the blade-base cross section.

Blade Instrumentation

The blade instrumentation required for this test involved using of strain gages to monitor operating stress levels during tunnel testing. The gages were used to identify blade response at integral order crossings and blade flutter. Model instrumentation limitations dictated that six strain gage signals could be monitored in each of the forward and aft hubs. Two strain gages were applied to three of the six blades in each of the forward and aft hubs. Analysis indicated that suitable gage locations could be selected so that multiple modes of interest could be detected with one or two gage locations. A test was conducted to provide modal ratios at four analytically selected points on the blade and to verify potential wind tunnel testing stress limits. A complete discussion of the testing and strain limits can be found in reference 10. In order to accommodate instrumentation leads, each blade was drilled on the pressure and suction sides, and through the shank, by using a special drilling fixture. These holes were used for installing instrumentation and were placed in all the blades. One fixture was used to drill all the blade instrumentation holes. Figure 25 shows the fixture, which incorporated three adjustable drill guides for pressure, suction, and base hole drilling. The fixture provided control over hole locations by indexing all holes to the shank shell diameter. Figures 26 and 27 show the CM–1D and CM–2D blades, respectively, fixtured for drilling. The surface holes intersected the shank hole along the shank centerline. The two strain gage locations selected for each of the four blade geometries are shown in figures 28 and 29.

Fabrication Test Support

Mechanical property testing.—Mechanical properties for the cured prepreg material were supplied by the prepreg manufacturer at the time of material delivery per the procurement specification. The mechanical properties were obtained per ASTM standards and are shown in table V. These values were used in all analytical modeling of the CM–1 and CM–2 blades. Coupon testing was also performed at NASA Lewis to include the effects of local processing on the composite properties. The elastic modulus was the primary variable of interest because this type of blading is generally a stiffness-critical-driven design. Results of further coupon testing are shown in table VI.

Photomicrograph for void detection.—Curing the graphite-epoxy prepreg involves releasing volatiles during the curing cycle. Care must be taken in defining the curing cycle to allow outgassing to occur prior to closing the mold. If the mold closes too soon, volatiles will be trapped in the final part, the void percentage will be high, and the mechanical properties will degrade. In order to check void content, blades, plates, and/or coupons were fabricated and used to evaluate the approximate void content. The subject specimen was cured by using the press and a curing cycle designed for the material system. This specimen was sliced at desired locations and cross-sectional pieces were mounted for microphotographs. The microphotographs were evaluated to approximate void contents. Also, a visual assessment was made as to the void content at various locations in the part by evaluating slices at several cross sections. The void content for these blades was approximately 2 percent when using the final cure cycle and mold configuration.

Pull strength evaluations.—The NASA Ames safety requirements mandated a pull strength of 5000 lb for the all-composite CM–1 and CM–2 blades that were used in this test. A high pull strength is beneficial and will reduce the potential for a blade loss and subsequent damage to the wind tunnel. Pull strength was evaluated by positioning a blade into an aluminum cavity and potting the blade up to a level corresponding to the approximate center of gravity of the composite airfoil. Another fixture, which was fabricated to simulate the shank shell/hub interface surface, was attached to the shank shell of the blade. Load was applied by using a tensile machine that was attached by threaded lugs into each end of the fixtures. This assembly was used to test several blades to failure. Initially, pull testing indicated only 4000 to 4600 lb of pull strength. The shanks of the failed blades were cut axially for inspection. It was discovered that fibers were not flaring smoothly into the shell and some fibers were being buckled as the blade shank was being assembled. Several changes were made to the fabrication process. The first was to alter the assembly procedure to use preformed filler plies, called thumb plies, at the shank shell/ blade interface. (The previous filler method in this region involved forcing chopped fiber between the shell surface and the blade ply tabs until the region was completely filled.) Additionally, large transition plies, called mushroom plies, were added between the thumb plies and the blade surface plies. Both of these modifications improved pull strength to well above 5000 lb.

Composite propfan x-ray inspection.—The logistics of cutting, handling, stacking, and curing the 10 000 plies that were needed to fabricate these blades required some form of quality assurance to prevent a blade from being utilized that had a serious inclusion in its makeup. The inclusion materials of interest were polypropylene, which was used to protect the front side of the prepreg material, and the backing paper. Methods that are better suited to test for these inclusions would be ultrasonic or thermal techniques, but such facilities were not readily available for inspecting the complicated blade geometry given the tight schedule constraints. Therefore, x-ray inspection was utilized to provide data after fabrication in order to detect any incidental inclusions of polypropylene and/or backing paper. A sample specimen with a known inclusion was used to calibrate the x-ray power and exposure settings in order to provide the best inclusion visibility at the thicknesses of interest. All blades were x-rayed alongside the calibration piece on each film for direct comparison. As a result of this inspection step, only one blade was discarded owing to an indication of a backing paper inclusion within the blade.

Composite Propfan Dynamic Evaluation

Holography.—Blade frequencies were used to evaluate blade integrity, to construct final "as-built" Campbell diagrams, and to group blades for installation in a particular installation set. A holographic technique was used to test each blade for the first six to eight natural frequencies. An acoustic driver was used to drive the blade over the frequency range of interest (0 to 4000 Hz). A laser was used to monitor the blade response, and fringe patterns were recorded at resonance points along the frequency spectrum. The images for each blade were recorded digitally and were enhanced if necessary to improve mode shape interpretation. The variation in mode shape was evaluated from blade to blade as an indicator of potential mass and stiffness distribution anomalies within the blade. Blades with mode shapes that differed greatly from the norm were dropped from the useful blade set. Blades, in this case, were very closely matched with respect to frequency and mode shape. Because it was not the objective to have a perfectly tuned rotor, all blades were within acceptable blade variations for installation in any grouping. Further details of the holographic procedure and results of the holography testing can be found in reference 11.

Shake table.—One blade from each design geometry was instrumented with strain gages and evaluated dynamically on a shaker table. The purposes of this test were to set the strain limits for the wind tunnel test and to verify a reasonable value for blade fatigue strength. The blades were subjected to a sinusoidal forcing function at the blade base with a frequency corresponding to one of the blade's natural frequencies. The limiting factor for the test was found to be the fatigue strength of the strain gages that were selected for the test. Therefore, the strain limits were set primarily on the basis of the ability of the instrumentation to survive the test environment. The final strain limit selected was 1.2×10^{-3} in./in. for both the CM–1D and CM–2D blades. Further information on the dynamic testing of the blades can be found in reference 10.

REFERENCES

1. Miller C.J.: Aerodynamic Design of Aft-Mounted Counter Rotating Propfans for a Cruise Missile Model. NASA TM-105265, 1992.

2. Thorp, S.A.; and Downey, K.M.: Computer Aided Design and Manufacturing of Composite Propfan Blades for a Cruise Missile Wind Tunnel Model. NASA TM-105269, 1992.

3. Ernst, M.A.: Structural Analysis of Low RPM Composite Propfan Blades for the LRCSW Wind Tunnel Model. NASA TM-105266, 1992.

4. Carek, D.A.: Structural Analysis of High RPM Composite Propfan Blades for a Cruise Missile Wind Tunnel Model. NASA TM-105267, 1992.

5. Lucero, J.M.; et al.: High Speed Aeroelastic Stability Analysis of Two Counter Rotating Propfan Designs for a Cruise Missile Model. NASA TM-105268, 1992.

6. ICI Fiberite Materials Handbook. ICI Fiberite, Tempe, AZ.

7. Hoff, G.E.: Experimental Performance and Acoustic Investigation of Modern Counterrotating Blade Concepts. (RTOP535-03-01; General Electric Co., Cincinnati, OH, NASA Contract NAS3-24080.) NASA CR-185158, 1990.

8. Nagle, D.; Auyeung, S.; and Turnberg, J.E.: SR-7A Aeroelastic Model Design Report. (HSER-9251; Hamilton Standard, Windsor Locks, CT; NASA Contract NAS3-23051.) NASA CR-174791, 1986.

9. Operating and Maintenance Manual for the Pratt & Whitney New England Automatic Turbine Blade Plotter. Pratt & Whitney Machine Tool, Publication M1961-1, 1984.

10. Elgin, S.D.; and Sutliff, T.J.: Structural Dynamic Testing of Composite Propfan Blades for the LRCSW Wind Tunnel Model. NASA TM-105272, 1992.

11. Miller, C.J.: Holographic Testing of Composite Propfans for a Cruise Missile Wind Tunnel Model. NASA TM-105271, 1992.

TABLE I. - CM–1D MASTER BLADE INSPECTION DATA

(a) Forward blades

Station	Location, percent of span	Chord region, percent		
		5-35	35-65	65-95
		Maximum discrepancy, in.		
1	20	0.002	0.0035	0.003
2	40	.0025	.0035	.003
3	65	.004	.004	.0035
4	85	.002	.002	.002

(b) Aft blades

1	20	0.001	0.002	0.0025
2	40	.002	.0045	.0045
3	65	.002	.004	.0045
4	85	.0045	.005	.0055

TABLE II. - CM–2D MASTER BLADE INSPECTION DATA

(a) Forward blades

Station	Location, percent of span	Chord region, percent		
		5-35	35-65	65-95
		Maximum discrepancy, in.		
1	20	0.0025	0.0025	0.0015
2	40	.0035	.0045	.003
3	60	.003	.0045	.003
4	80	.0025	.003	.003

(b) Aft blades

1	20	0.0015	0.002	0.0015
2	40	.002	.003	.0015
3	60	.0025	.003	.001
4	80	.002	.003	.002

TABLE III. - CM–1D BLADE INSPECTION SUMMARY

(a) Forward blades

Spanwise location	Thickness deviation value	Chord region, percent		
		5-35	35-65	65-95
Tip section (3.506 in.)	Average	0.0071	0.0108	0.0133
	Standard deviation	.0052	.0059	.0047
Midsection (2.063 in.)	Average	.0063	.0093	.0083
	Standard deviation	.0011	.0016	.0009
Base section (0.825 in.)	Average	.0092	.0038	.0086
	Standard deviation	.0029	.0019	.0029

(b) Aft blades

Tip section (3.506 in.)	Average	0.0090	0.0083	0.0104
	Standard deviation	.0027	.0028	.0029
Midsection (2.063 in.)	Average	.0079	.0066	.0098
	Standard deviation	.0010	.0006	.0016
Base section (0.825 in.)	Average	.0077	.0094	.0125
	Standard deviation	.0014	.0023	.0021

TABLE IV. - CM–2D BLADE INSPECTION SUMMARY

(a) Forward blades

Spanwise location	Thickness deviation value	Chord region, percent		
		5-35	35-65	65-95
Tip section (2.350 in.)	Average	0.0078	0.0048	0.0083
	Standard deviation	.0031	.0013	.0025
Midsection (1.282 in.)	Average	.0041	.0043	.0076
	Standard deviation	.0007	.0008	.0016
Base section (0.640 in.)	Average	.0054	.0044	.0010
	Standard deviation	.0022	.0009	.0029

(b) Aft blades

Tip section (2.350 in.)	Average	0.0068	0.0055	0.0083
	Standard deviation	.0050	.0038	.0070
Midsection (1.282 in.)	Average	.0033	.0038	.0050
	Standard deviation	.0022	.0022	.0029
Base section (0.640 in.)	Average	.0044	.0054	.0047
	Standard deviation	.0040	.0034	.0031

TABLE V. - MECHANICAL PROPERTIES TEST DATA

[Fiberite HyE-3048A1E; lot F90–0067; room temperature.]

Property	Samples					
	1	2	3	4	5	Average
Tensile strength, 0°, ksi	279	251	270	279	250	266
Tensile modulus, 0°, Msi	19.6	19.2	19.2	19.3	19.2	19.4
Poisson's ratio, 0°	0.31	0.31	0.29	0.31	0.31	0.31
Tensile strength, 90°, ksi	9.4	10.0	7.5	10.1	9.5	9.3
Tensile modulus, 90°, Msi	1.2	1.2	1.2	1.2	1.2	1.2

Property	0° panel	90° panel
Cured ply thickness, in.	0.0032	0.0032
Specific gravity	1.55	1.54
Fiber volume, percent	60.4	59.0

TABLE VI. - MODULUS TEST DATA

[Fiberite HyE-3048A1E; room temperature.]

Property	Samples					
	1	2	3	4	5	Average
Tensile modulus, 0°, ksi	14.7	16.0	15.4	14.9	15.8	15.4

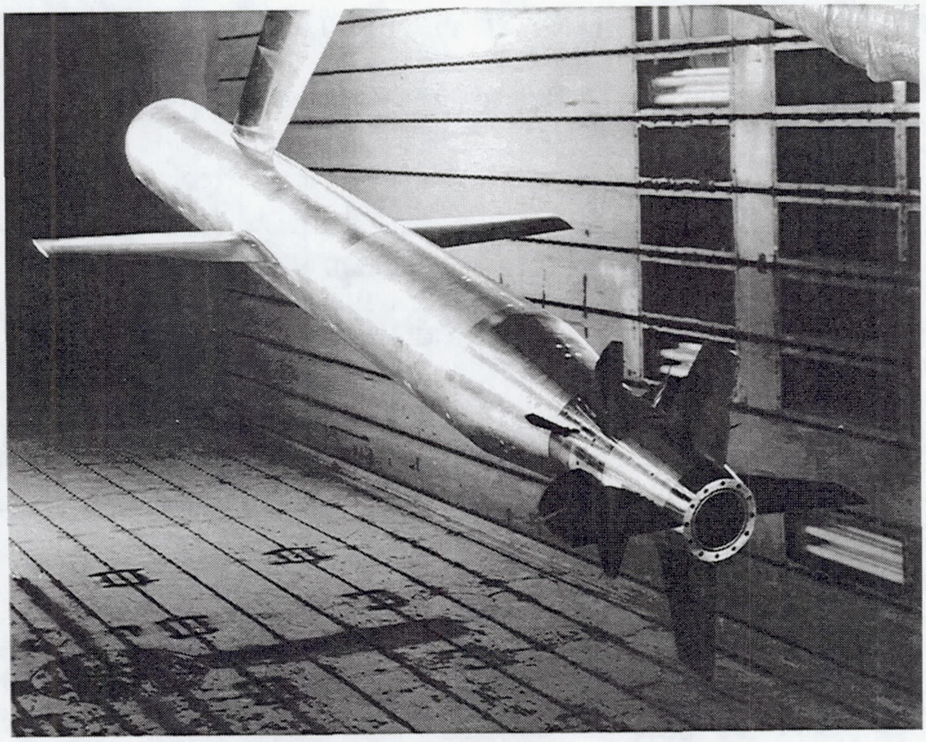

Figure 1.—0.55-Scale cruise missile model installed in wind tunnel.

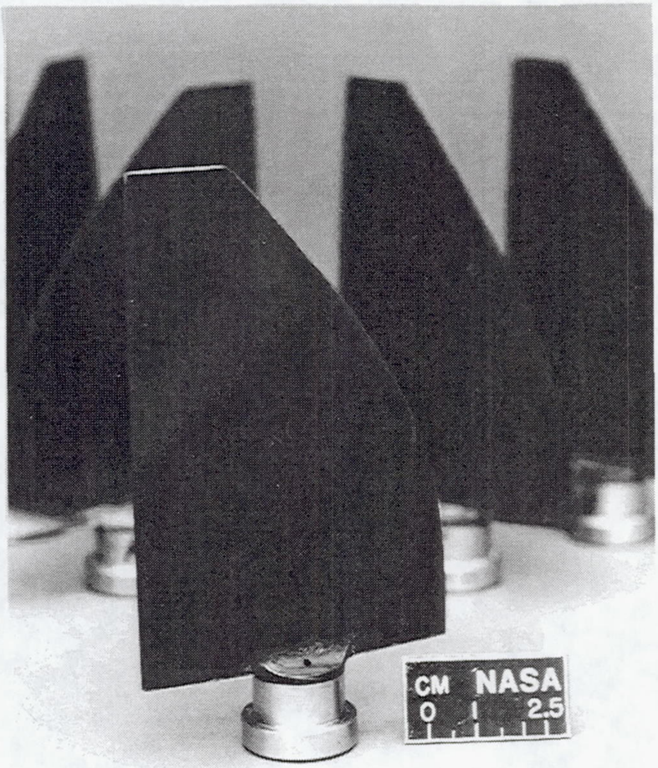

C-90-14578

Figure 2.—CM–1D aft blade, typical of CM–1D and CM–2D blades.

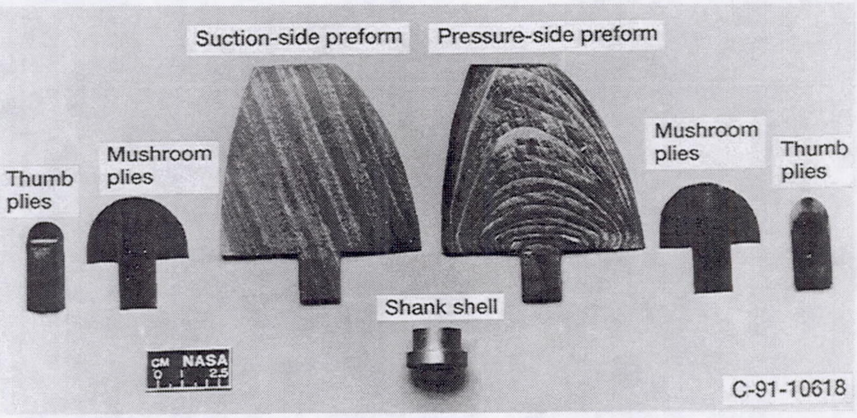

Figure 3.—Components used to assemble a CM–2D blade.

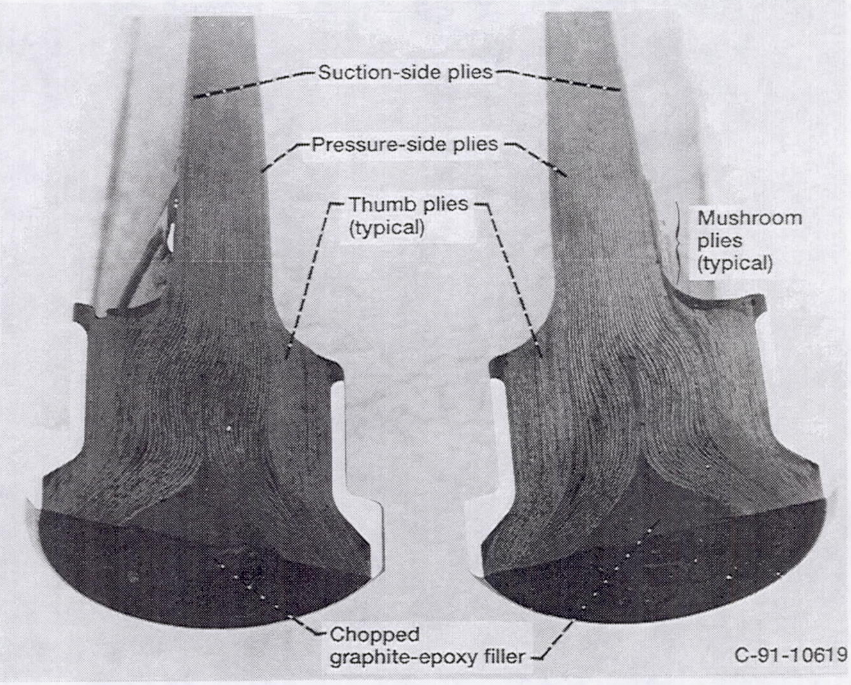

Figure 4.—Sectioned blade showing various blade component locations.

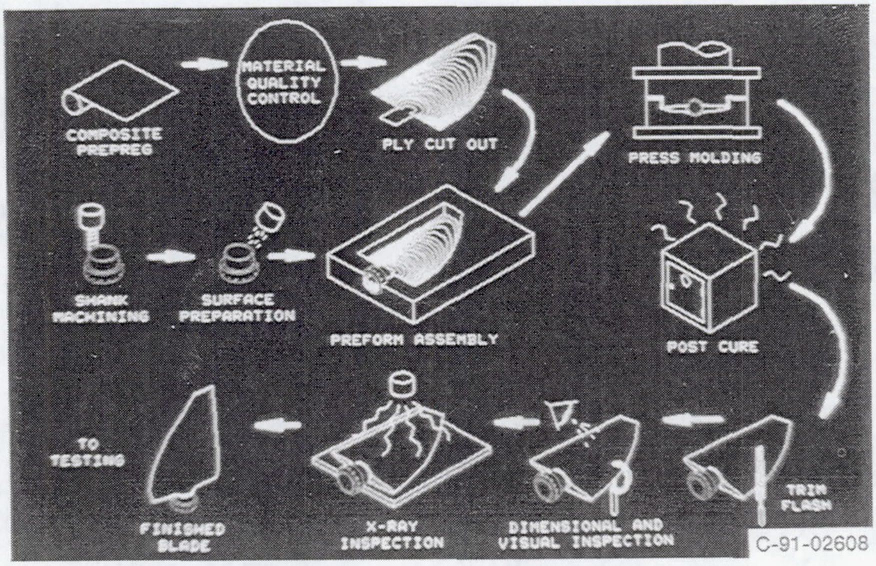

Figure 5.—Schematic of fabrication process steps (compression molding process).

Figure 6.—CM–1D foward master blade.

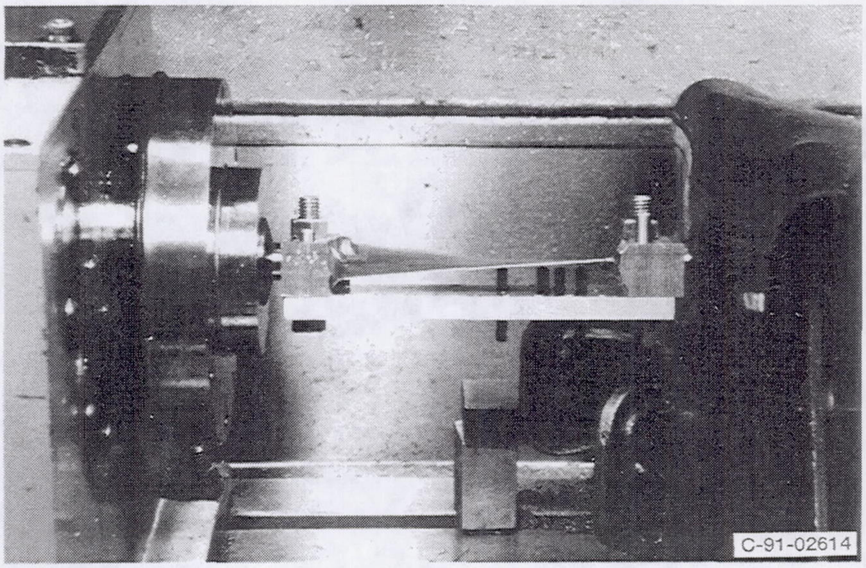

Figure 7.—Master blade fixtured in machine tool.

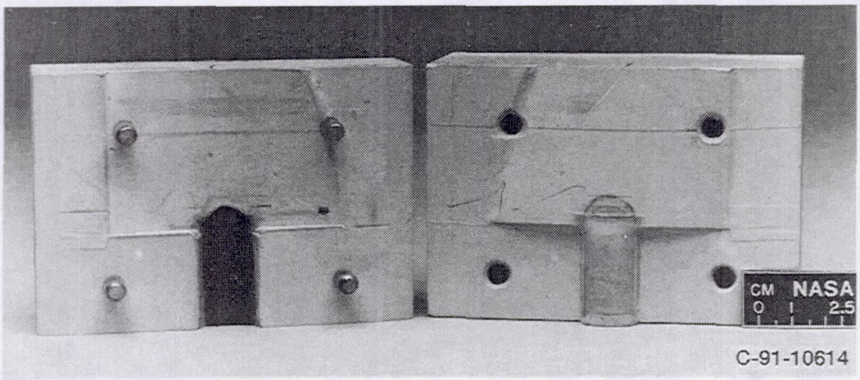

Figure 8.—Mold used to compact "thumb ply" filler pieces.

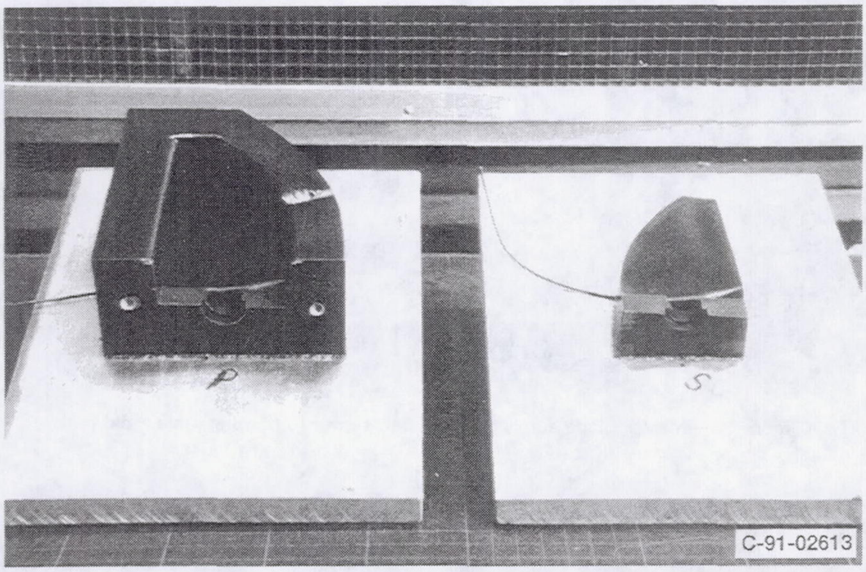

Figure 9.—CM-1D forward blade mold.

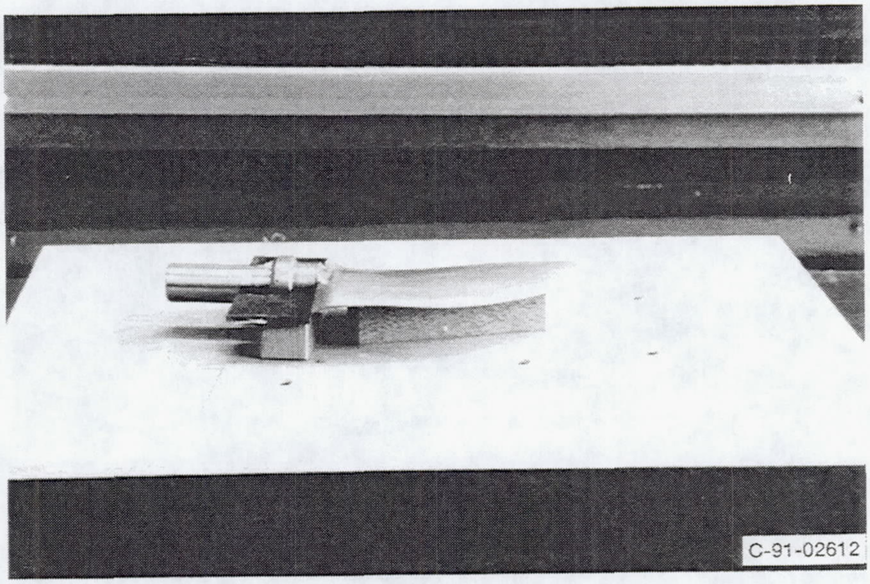

Figure 10.—Master blade positioned on base for proper mold parting line.

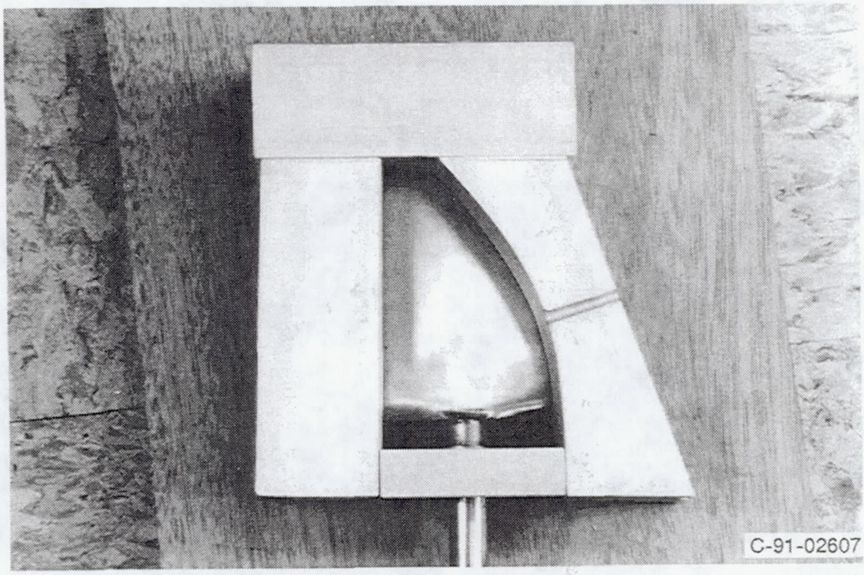

Figure 11.—Master blade surrounded by dams prior to pouring male mold half.

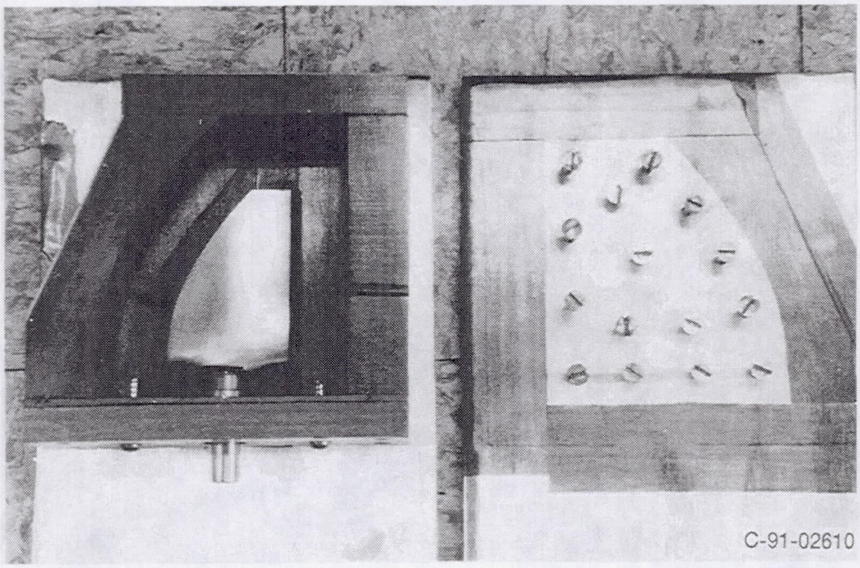

Figure 12.—Aluminum plate that has been bead blasted and has flathead screws installed.

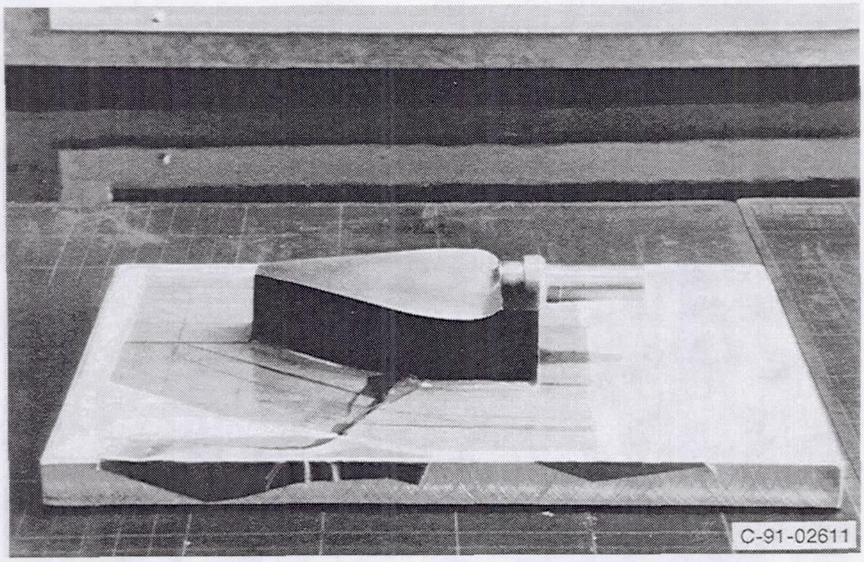

Figure 13.—Completed male half of mold for CM–1D forward blade.

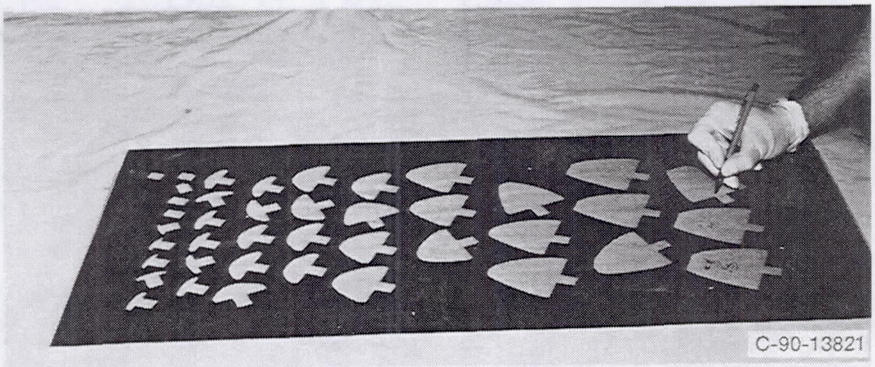

Figure 14.—Metal template for tracing ply shapes.

Figure 15.—Lewis technicians cutting plies with hand shears.

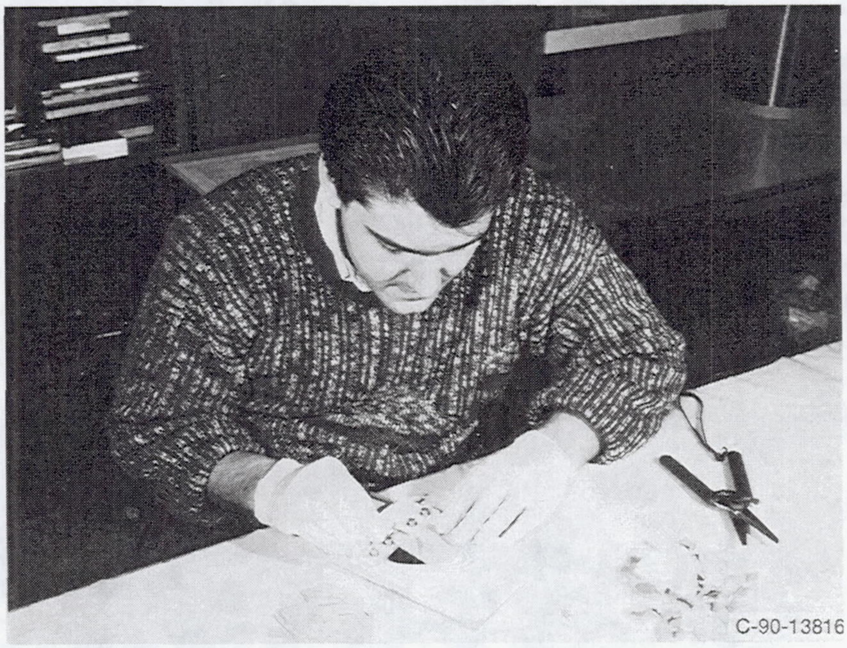

Figure 16.—Ply stacking fixture being used to stack CM–2D blade plies.

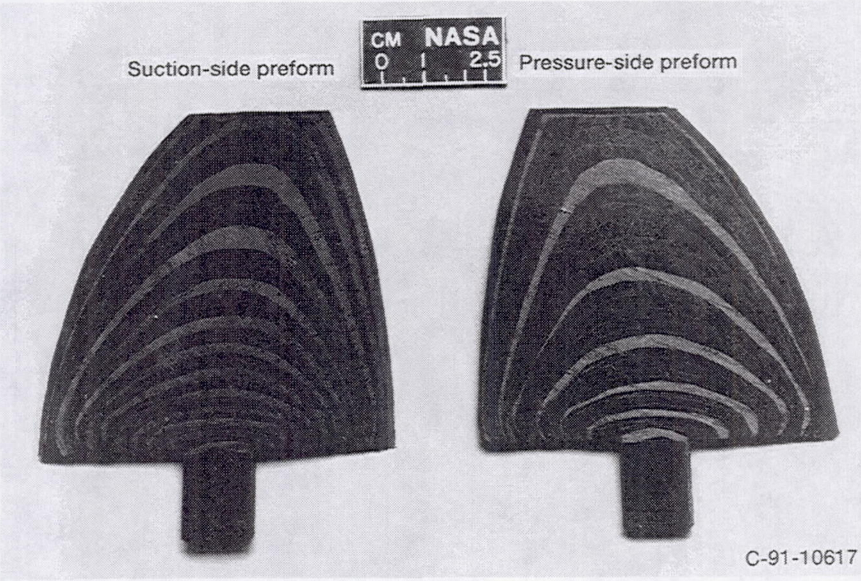

Figure 17.—CM–2D pressure- and suction-side preforms.

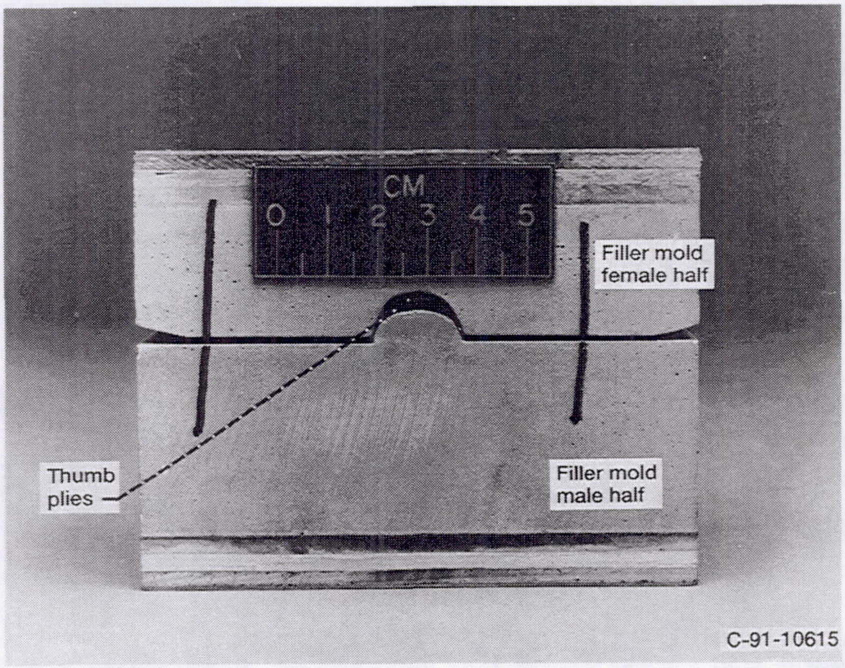

Figure 18.—Thumb plies being compacted in filler mold.

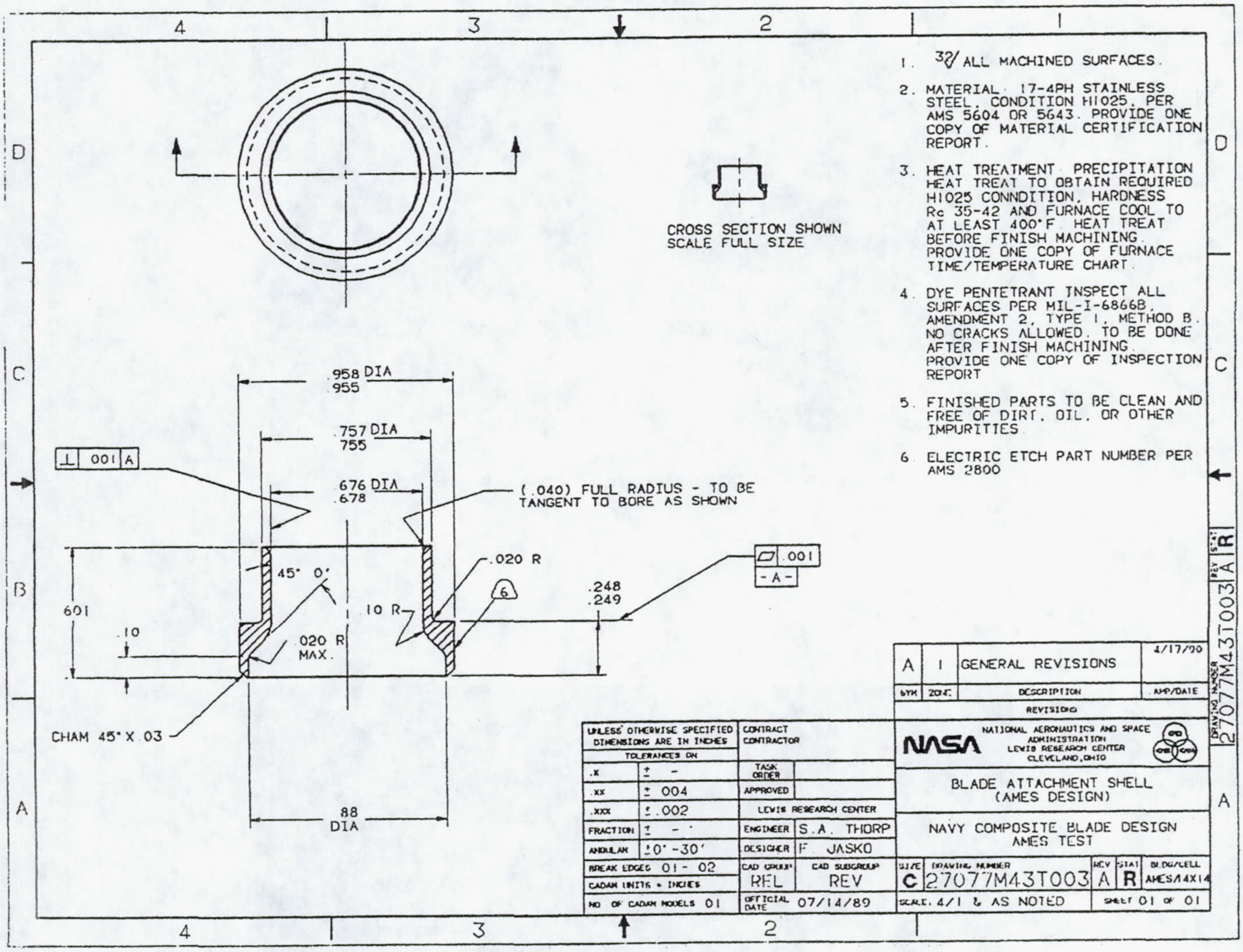

1. 32/ ALL MACHINED SURFACES.
2. MATERIAL: 17-4PH STAINLESS STEEL, CONDITION H1025, PER AMS 5604 OR 5643. PROVIDE ONE COPY OF MATERIAL CERTIFICATION REPORT.
3. HEAT TREATMENT: PRECIPITATION HEAT TREAT TO OBTAIN REQUIRED H1025 CONNDITION, HARDNESS Rc 35-42 AND FURNACE COOL TO AT LEAST 400°F. HEAT TREAT BEFORE FINISH MACHINING. PROVIDE ONE COPY OF FURNACE TIME/TEMPERATURE CHART.
4. DYE PENTETRANT INSPECT ALL SURFACES PER MIL-I-6866B, AMENDMENT 2, TYPE I, METHOD B. NO CRACKS ALLOWED. TO BE DONE AFTER FINISH MACHINING. PROVIDE ONE COPY OF INSPECTION REPORT
5. FINISHED PARTS TO BE CLEAN AND FREE OF DIRT, OIL, OR OTHER IMPURITIES.
6. ELECTRIC ETCH PART NUMBER PER AMS 2800

SYM	ZONE	DESCRIPTION	APP/DATE
A	1	GENERAL REVISIONS	4/17/90

REVISIONS

UNLESS OTHERWISE SPECIFIED DIMENSIONS ARE IN INCHES
TOLERANCES ON
.X ± -
.XX ± .004
.XXX ± .002
FRACTION ± -
ANGULAR ±0° -30'
BREAK EDGES .01 - .02
CADAM UNITS = INCHES
NO. OF CADAM MODELS 01

CONTRACT
CONTRACTOR
TASK ORDER
APPROVED
LEWIS RESEARCH CENTER
ENGINEER S.A. THORP
DESIGNER F. JASKO
CAD GROUP REL
CAD SUBGROUP REV
OFFICIAL DATE 07/14/89

NATIONAL AERONAUTICS AND SPACE ADMINISTRATION
LEWIS RESEARCH CENTER
CLEVELAND, OHIO

BLADE ATTACHMENT SHELL
(AMES DESIGN)

NAVY COMPOSITE BLADE DESIGN
AMES TEST

SIZE C
DRAWING NUMBER 27077M43T003
REV A
STAT R
BLDG/CELL AMES/14X14
SCALE: 4/1 & AS NOTED
SHEET 01 OF 01

DRAWING NUMBER 27077M43T003 REV A STAT R

Figure 19.—Drawing for metal shell used at base of composite blade.

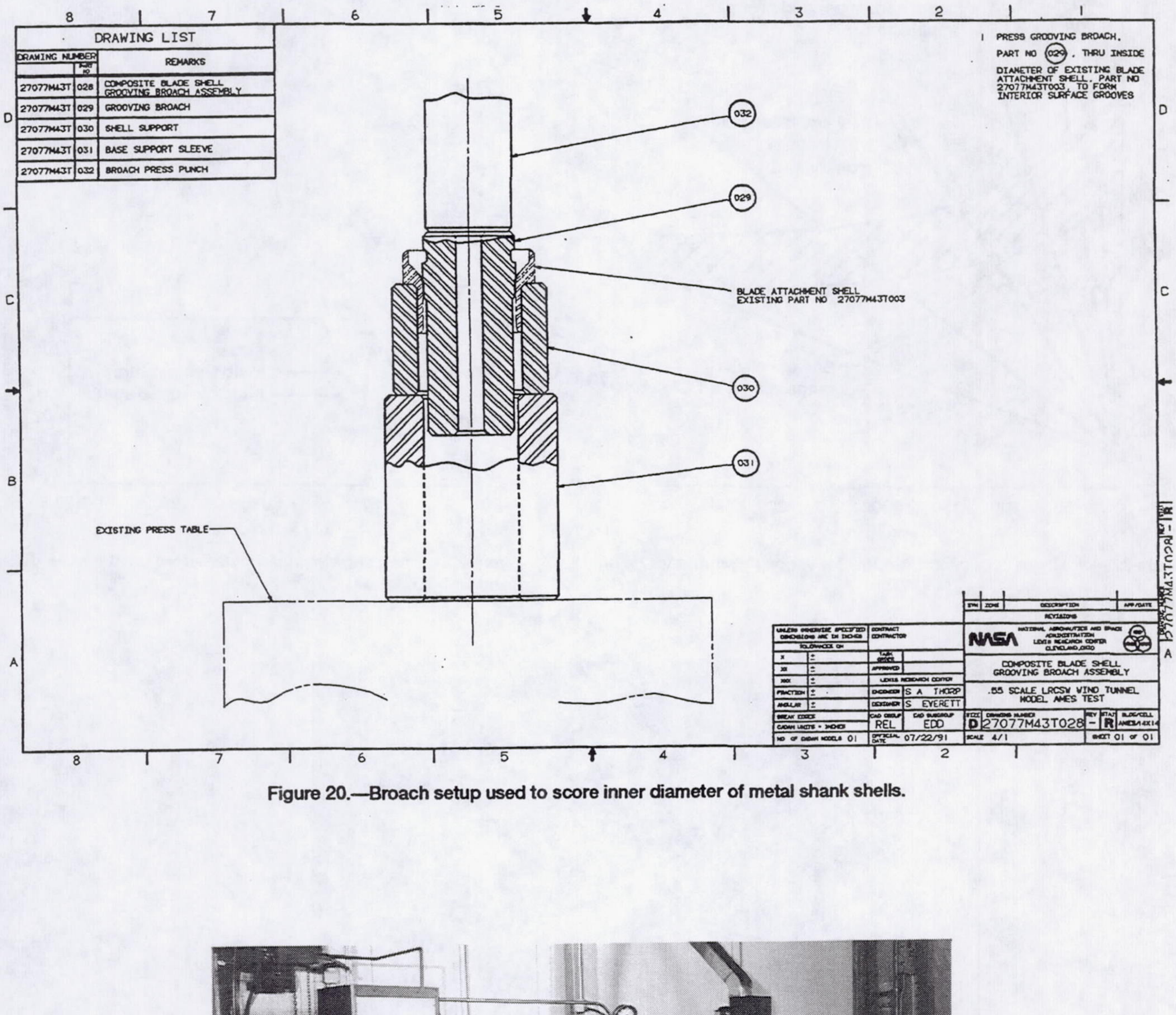

Figure 20.—Broach setup used to score inner diameter of metal shank shells.

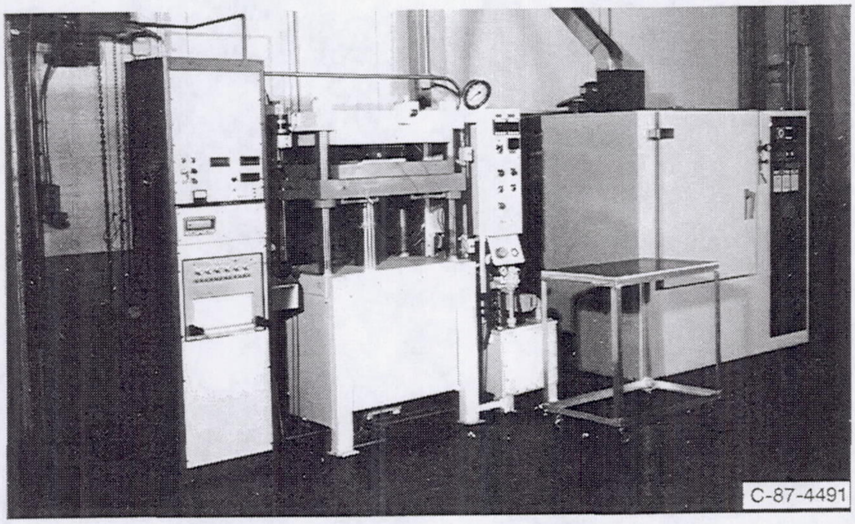

Figure 21.—Composite press and postcure oven.

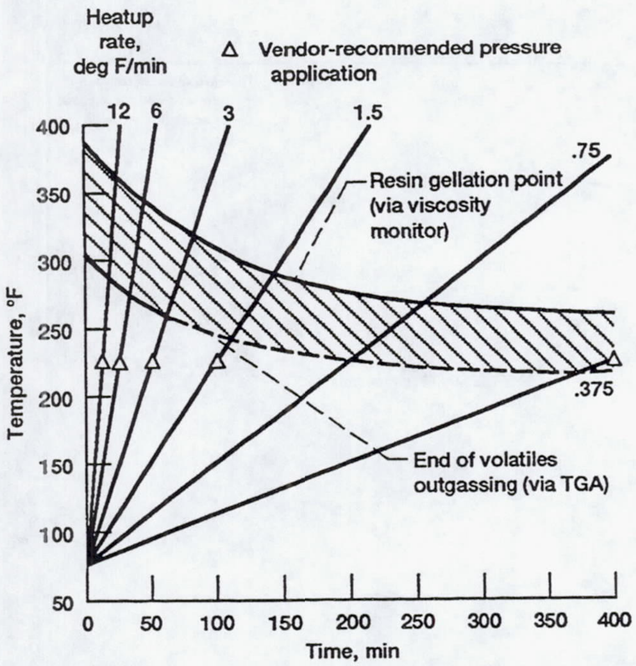

Figure 22.—Pressure application window for various heatup rates.

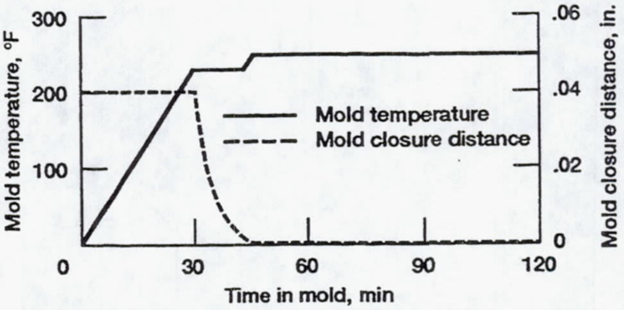

Figure 23.—Chart showing mold parameters used for CM–1D and CM-2D blades.

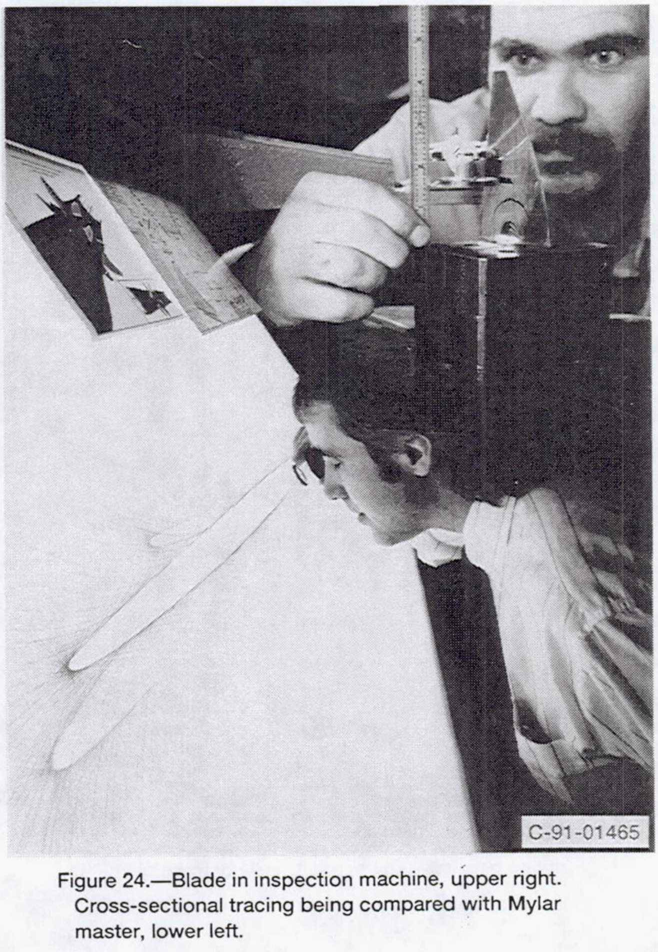

Figure 24.—Blade in inspection machine, upper right. Cross-sectional tracing being compared with Mylar master, lower left.

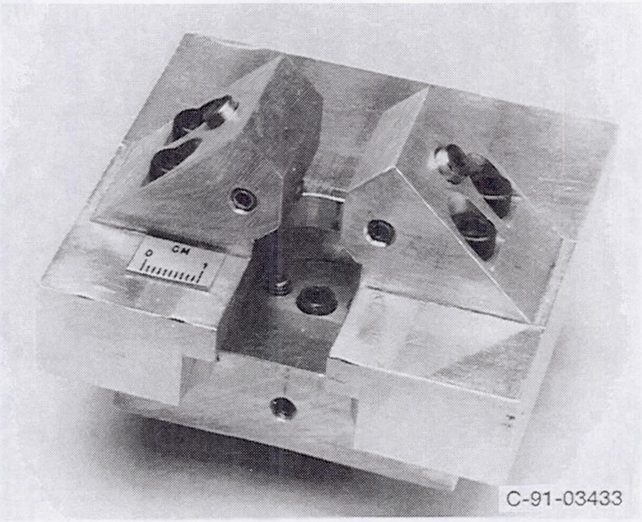

Figure 25.—Blade fixture for drilling instrumentation holes.

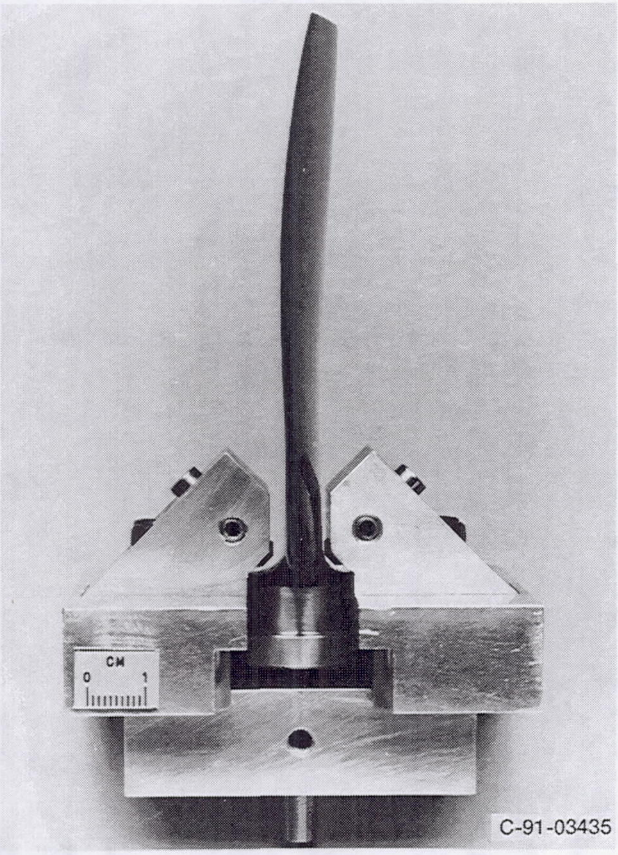

Figure 26.—CM–1D blade fixtured for drilling.

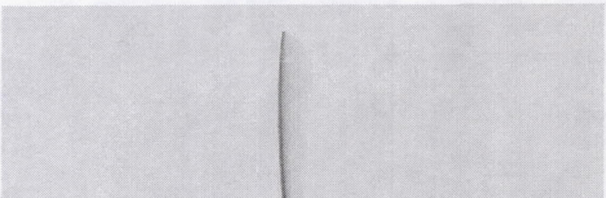

Figure 27.—CM–2D blade fixtured for drilling.

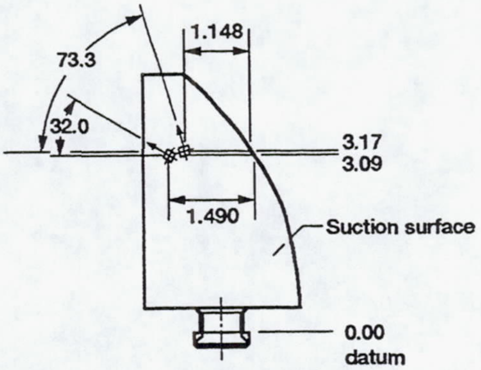

(a) Forward blade.

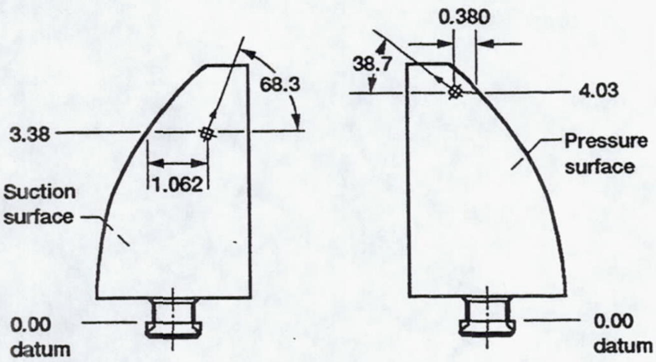

(b) Aft blade.

Figure 28.—CM-1D strain gage locations. (Linear dimensions are in inches.)

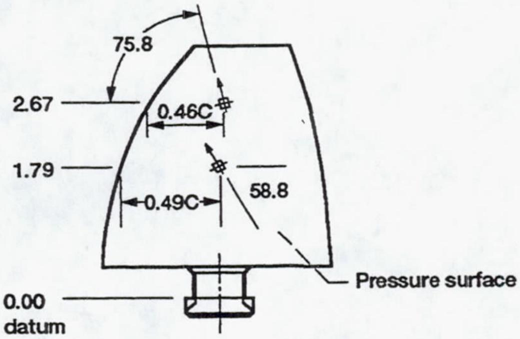

(a) Forward blade.

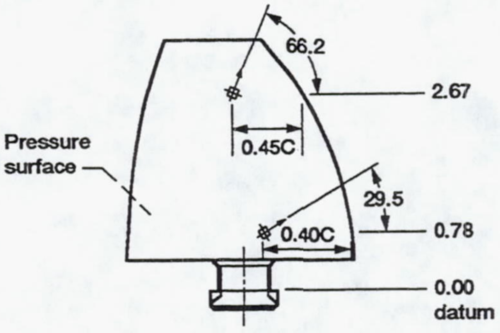

(b) Aft blade.

Figure 29.—CM-2D strain gage locations. (Linear dimensions are in inches.)

REPORT DOCUMENTATION PAGE	*Form Approved* *OMB No. 0704-0188*

1. AGENCY USE ONLY *(Leave blank)*	**2. REPORT DATE** April 1993	**3. REPORT TYPE AND DATES COVERED** Technical Memorandum

4. TITLE AND SUBTITLE Fabrication of Composite Propfan Blades for a Cruise Missile Wind Tunnel Model	**5. FUNDING NUMBERS** WU–535–03–10
6. AUTHOR(S) E. Brian Fite	
7. PERFORMING ORGANIZATION NAME(S) AND ADDRESS(ES) National Aeronautics and Space Administration Lewis Research Center Cleveland, Ohio 44135–3191	**8. PERFORMING ORGANIZATION REPORT NUMBER** E–7327
9. SPONSORING/MONITORING AGENCY NAMES(S) AND ADDRESS(ES) National Aeronautics and Space Administration Washington, D.C. 20546–0001	**10. SPONSORING/MONITORING AGENCY REPORT NUMBER** NASA TM–105270

11. SUPPLEMENTARY NOTES

Responsible person, E. Brian Fite, (216) 433–3892.

12a. DISTRIBUTION/AVAILABILITY STATEMENT Unclassified - Unlimited Subject Category 39	**12b. DISTRIBUTION CODE**

13. ABSTRACT ***(Maximum 200 words)***

This report outlines the procedures that were employed in fabricating prototype graphite-epoxy composite propfan blades. These blades were used in wind tunnel tests that investigated propfan propulsion system interactions with a missile airframe in order to study the feasibility of an advanced-technology-propfan-propelled missile. Major phases of the blade fabrication presented include machining of the master blade, mold fabrication, ply cutting and assembly, blade curing, and quality assurance. Specifically, four separate designs were fabricated, 18 blades of each geometry, using the same fabrication technique for each design.

14. SUBJECT TERMS Propfan blades; Composite structures; Fabrication	**15. NUMBER OF PAGES** 30
	16. PRICE CODE A03

17. SECURITY CLASSIFICATION OF REPORT Unclassified	**18. SECURITY CLASSIFICATION OF THIS PAGE** Unclassified	**19. SECURITY CLASSIFICATION OF ABSTRACT** Unclassified	**20. LIMITATION OF ABSTRACT**