R.J. Hayduk

1288

ANNUAL REPORT

November 1, 1991

CENTER FOR SPACE CONSTRUCTION

University of Colorado, Boulder

ANNUAL REPORT

November 1, 1991

CENTER FOR SPACE CONSTRUCTION

University of Colorado at Boulder
Boulder, CO 80309-0529

A NASA University Space Engineering Research Center
Grant NAGW-1388
NASA Program Monitor: Gordon I. Johnston
NASA Technical Monitor: Murray S. Hirschbein

155090

PRIMARY

INTRODUCTION

The Center for Space Construction at the University of Colorado at Boulder was established in 1988 as a University Space Engineering Research Center sponsored by the National Aeronautics and Space and Administration under Grant NAGW-1388. The mission of the Center is, on the one hand, to conduct interdisciplinary engineering research which is critical to the construction of future space structures and systems and, on the other hand, to educate students who will have the vision and technical skills to successfully lead future space construction activities.

As humans continue to expand their presence beyond the Earth for the purposes of exploration, science, or engineering, the ability to establish large structures in Earth orbit and shelters on remote planetary surfaces will become increasingly critical to the success of space missions. Construction of such space structures represents a whole new challenge to the engineering community. The cost of building these space structures is tremendous. The safety and reliability requirements are extremely stringent. The size of the orbital structures will be great—as large as tens or even hundreds of football fields. In addition, there is the problem of reduced gravity, which will add additional constraints to construction. For both orbital and extraterrestrial space structures the construction sites are remote from Earth, difficult to access and extremely different from terrestrial construction environments.

We can now draw upon a rich pool of technologies for operating spacecraft and for terrestrial construction, and much has been learned from past space missions. However, it is nevertheless very important to realize that when we are engaged in these unprecedented missions to establish a permanent presence in space, a new engineering culture is bound to emerge. This new culture will require a new level of analytical and planning capabilities. It will also require new concepts in structural mechanisms, construction equipment, construction automation with robots and telepresence, and the utilization of indigenous construction materials. These concepts need to be developed intimately within the context of space construction. In other words, the new culture will not be based on the conventional division and integration of engineering tasks. It requires a new level of integration of different disciplines.

The Center for Space Construction was established to pioneer this new culture of space construction. The Center's research activities are carefully planned and conducted to bring faculty and students together to focus on the overall problem of how future space structures may be built. The research activities are currently organized around two central projects: Orbital Construction and Lunar Construction. The expected research results of these two projects are the basic knowledge, methods, and techniques which will lead to better understanding of construction processes, and better design of space structures and their construction processes. We specifically search for new concepts in the areas of construction equipment, structural elements, construction materials, construction methods and processes, and analytical methods and tools which have greater construction automation, reliability, robustness, safety, and economy.

An even more important "product" of the Center is the students. Like the Center faculty, the student body comes from diverse backgrounds. Every student is involved in one of the interdisciplinary research projects, and students are advised to take courses in different disciplines to broaden their technical training. Students who are cultivated through CSC projects, course work, and weekly seminars emerge as a group of competent engineers with a broad view of space construction activities.

ORBITAL CONSTRUCTION

The main goal of the Orbital Construction Project is to advance engineering know-how for building large structure in Earth orbits. The dimensions of future orbital structures will be enormous. To construct these large structures it will be necessary to combine deployment and assembly techniques. Complete ground testing of construction processes for these large orbital structures and the structures themselves will not be possible. Therefore, to be sufficiently reliable structures must be designed with both control system redundancy and mechanical redundancy. Moreover, because moving materials and equipment into orbits is very expensive, construction sequences must be planned to minimize cost and optimize construction robustness. The six current research tasks for this project produce computational methods and simulation tools for analysis and design of deployment processes and assembly of substructures. A special emphasis of this research is to reduce the need for ground testing.

506675 S1-18
Pg 5 155091

N93-29109

INTERACTION DYNAMICS OF ON-ORBIT CONSTRUCTION

K.C. Park

Deployment and assembly of large structures in orbit is a critical technology to the overall problem of orbital construction. The attendant large configuration changes of structures will cause significant changes in the dynamic characteristics of the entire system, and perturbation to the orbital dynamics of the spacecraft from which the structures are deployed and/or assembled. To better design structures for deployment and assembly, and to better design controlled deployment/assembly processes, accurate modeling techniques are absolutely essential.

In the first part of this study, the problem of modeling the dynamics of deploying and retrieving beam-like structures from a rotating base has been addressed. A methodology for discrete modeling, and a computational procedure have been developed. These results give us the capability of understanding and predicting the effects on the overall satellite motion of deploying flexible appendages. This is an initial step towards a general capability of treating axially moving three-dimensional beams.

The second part of the study investigates the interaction dynamics of the orbiter, its flexible manipulator and the structures to be assembled/deployed, as a prerequisite in order to simulate incremental in-space structural construction processes. Preliminary results so obtained indicate that, as the inertia properties of the flexible large space structure under construction change during the space assembly/construction process, the interaction dynamics undergo significant changes in their characteristics, thus revealing the need for a variety of control strategies throughout construction.

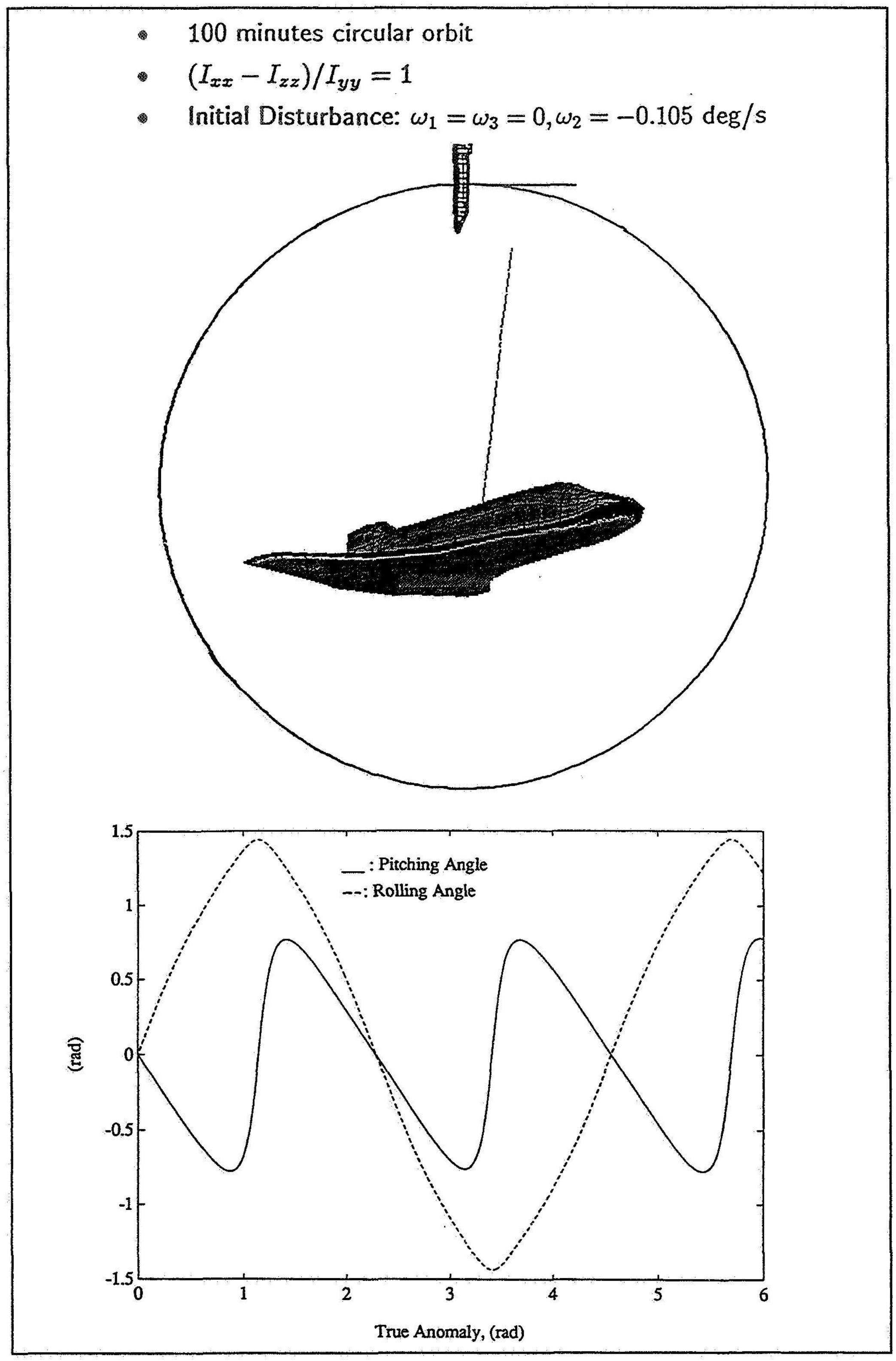

Fig 1.1 Librational motion of a space shuttle: (a) Orbiting space shuttle with MRMS; (b) three-dimensional librational response

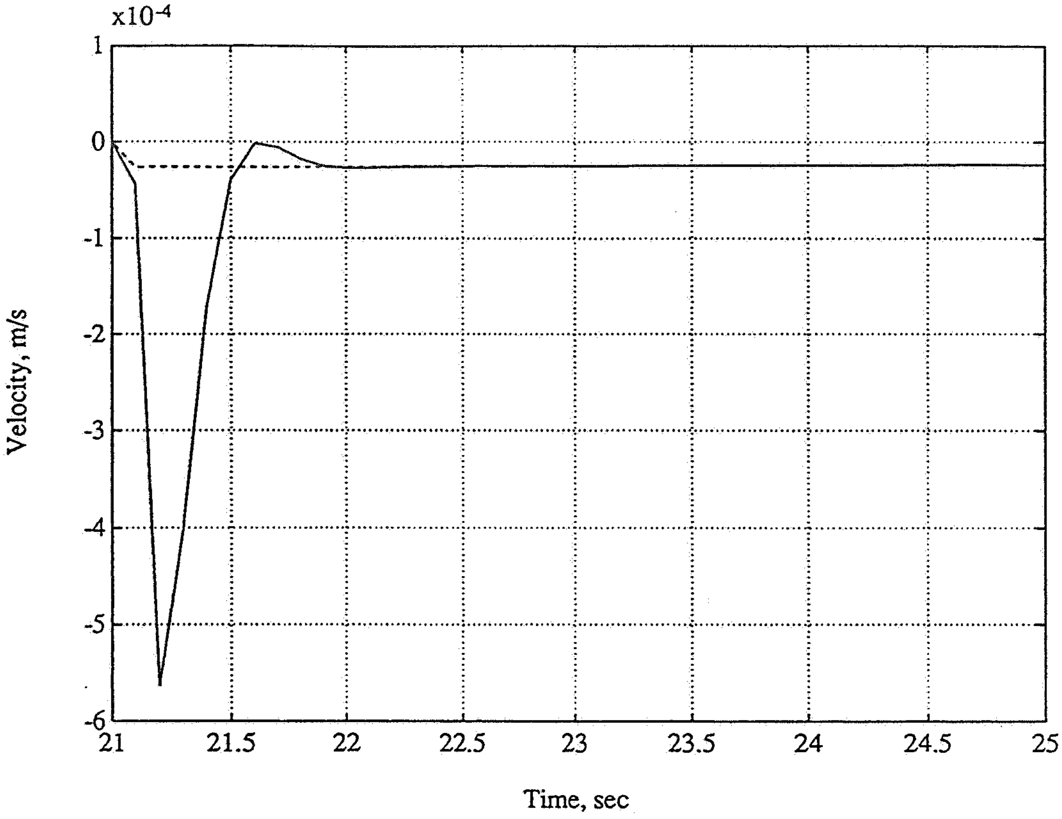

Fig. 1.2 Contact velocity of SRMS and payload: X-axis

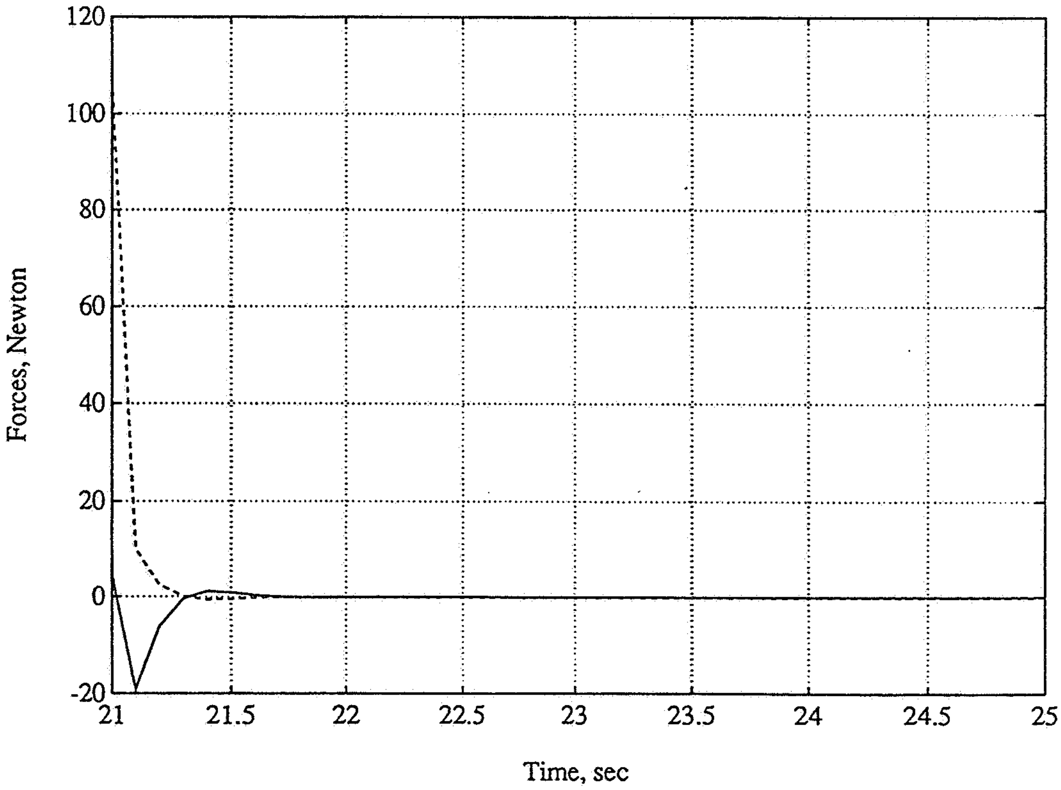

Fig. 1.3 Contact forces of SRMS and payload: X-axis

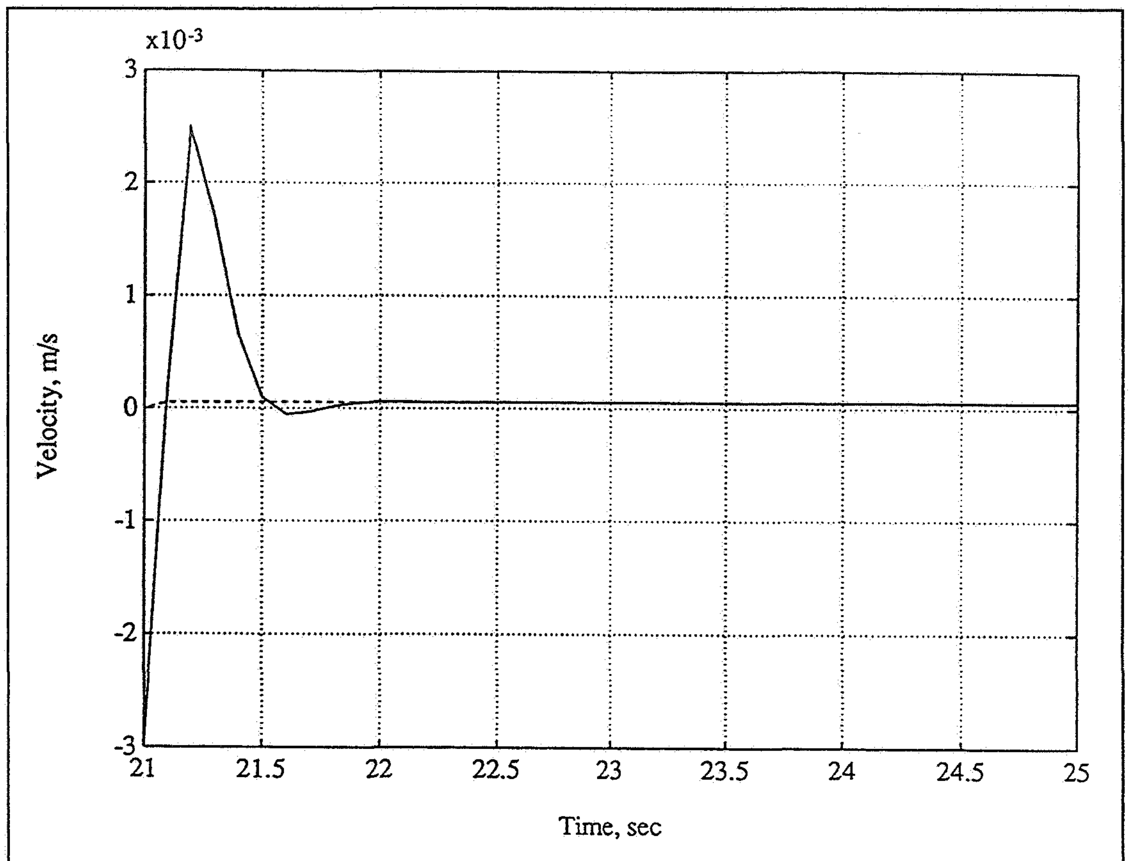

Fig. 1.4 Contact velocity of SRMS and payload: Y-axis

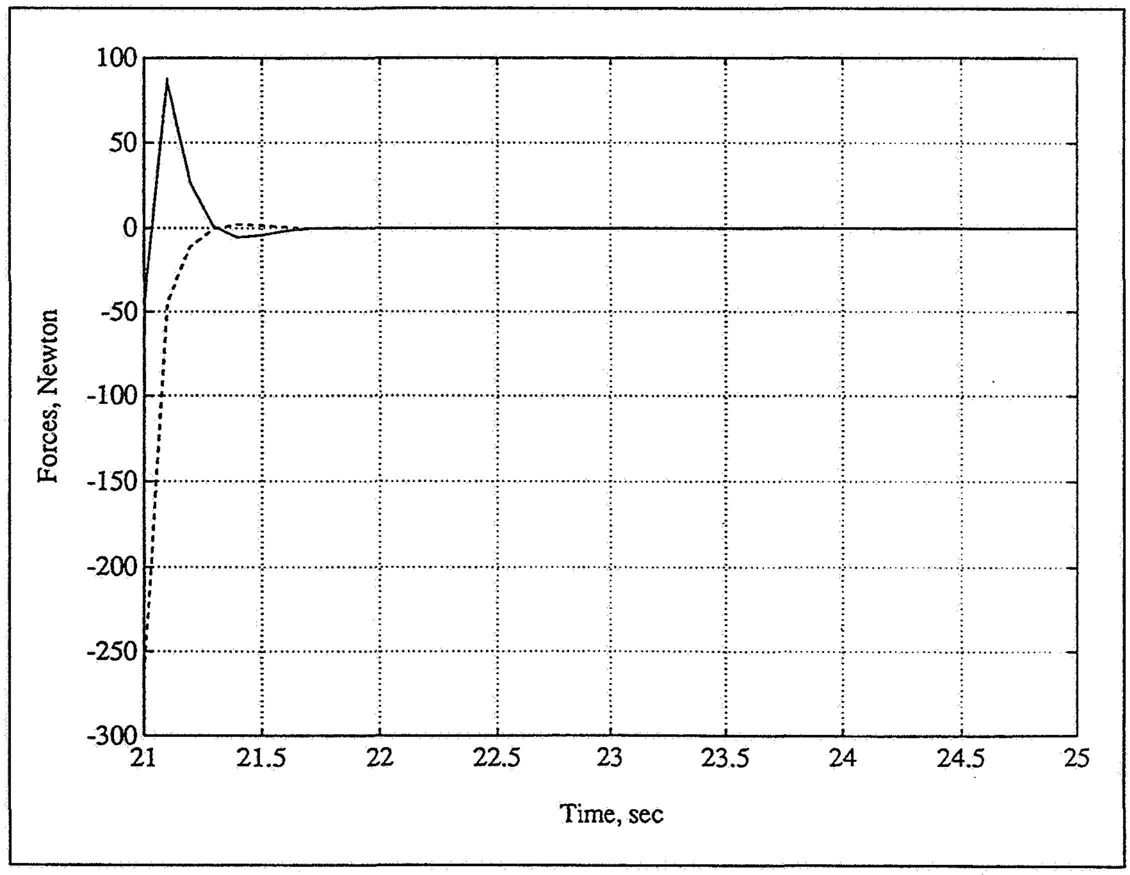

Fig. 1.5 Contact forces of SRMS and payload: Y-axis

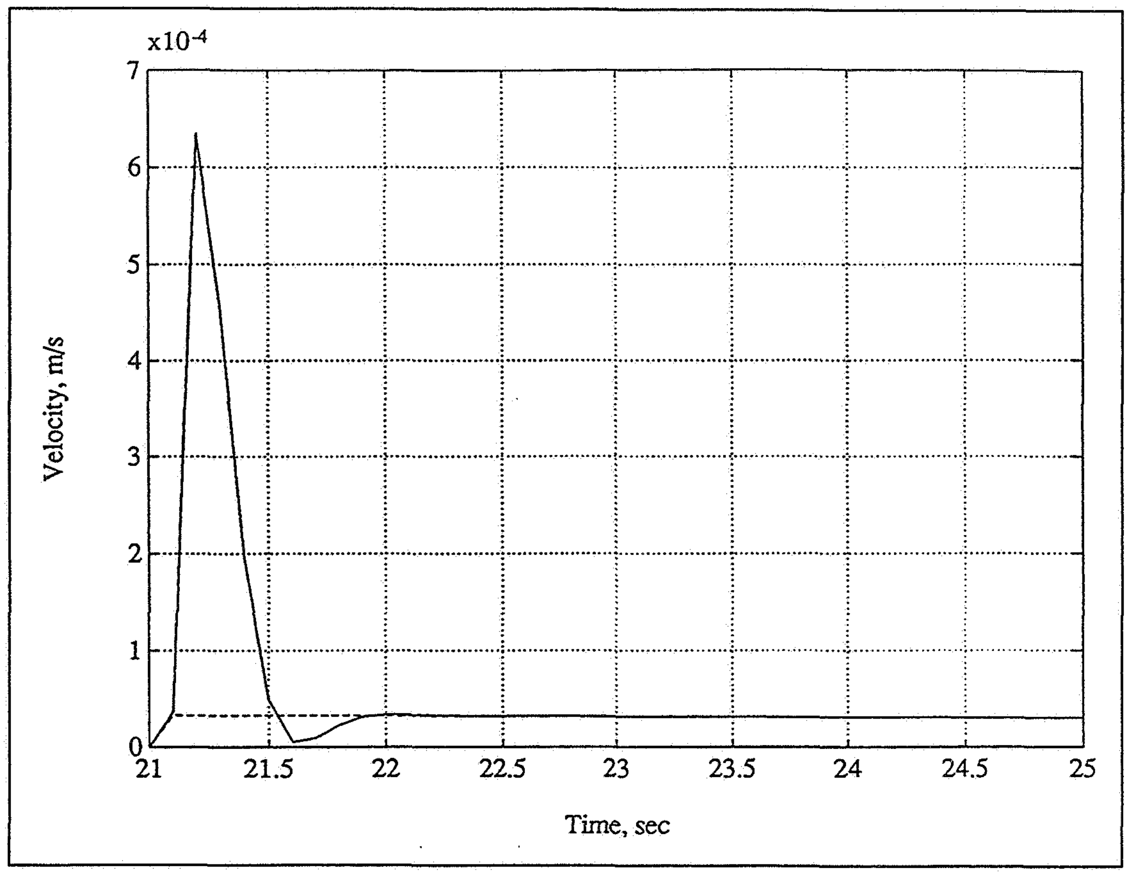

Fig. 1.6 Contact velocity of SRMS and payload: Z-axis

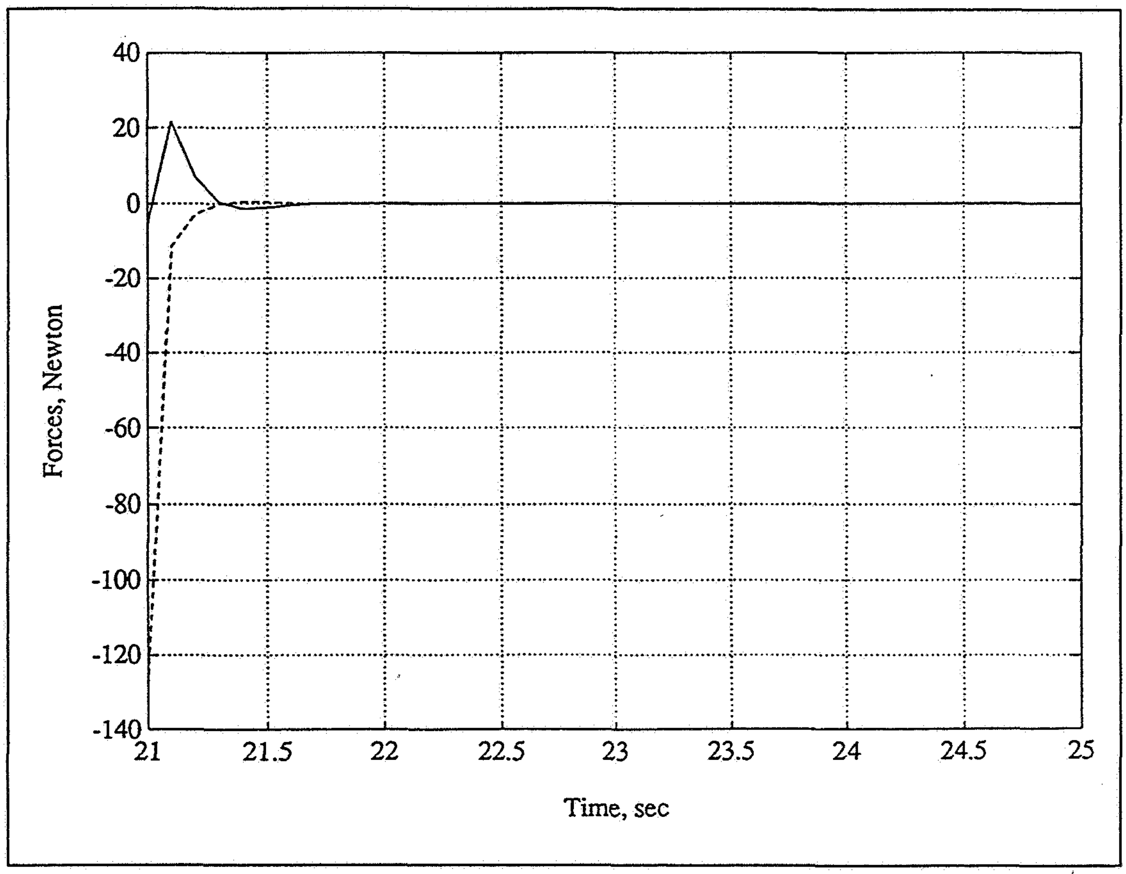

Fig. 1.7 Contact forces of SRMS and payload: Z-axis

S2-18
156092
p. 8

500697

N93-29110

HYBRID CMS METHODS WITH MODEL REDUCTION FOR ASSEMBLY OF STRUCTURES

Charbel Farhat

Future on-orbit structures will be designed and built in several stages, each with specific control requirements. Therefore there must be a methodology which can predict the dynamic characteristics of the assembled structure, based on the dynamic characteristics of the subassemblies and their interfaces. The methodology developed by CSC to address this issue is Hybrid Component Mode Synthesis (HCMS). HCMS distinguishes itself from standard component mode synthesis algorithms in the following features: (a) it does not require the subcomponents to have displacement compatible models, which makes it ideal for analyzing the deployment of heterogeneous flexible multibody systems, (b) it incorporates a second-level model reduction scheme at the interface, which makes it much faster than other algorithms and therefore suitable for control purposes, and (c) it does answer specific questions such as "how does the global fundamental frequency vary if I change the physical parameters of substructure k by a specified amount?". Because it is based on an energy principle rather than displacement compatibility, this methodology can also help the designer to define an assembly process. Current and future efforts are devoted to applying the HCMS method to design and analyze docking and berthing procedures in orbital construction.

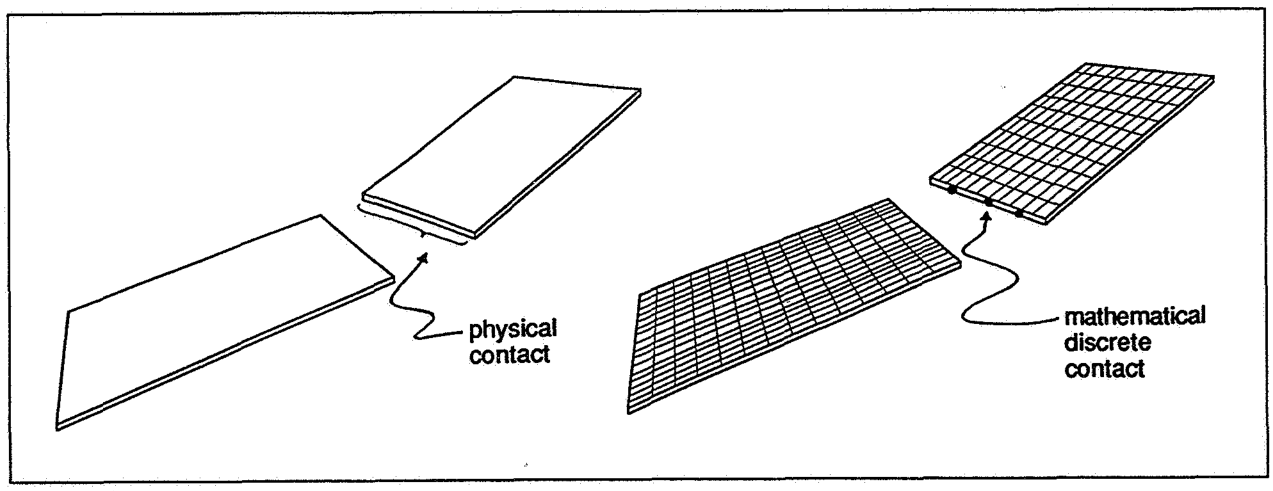

Fig. 2.1 Example of a plate

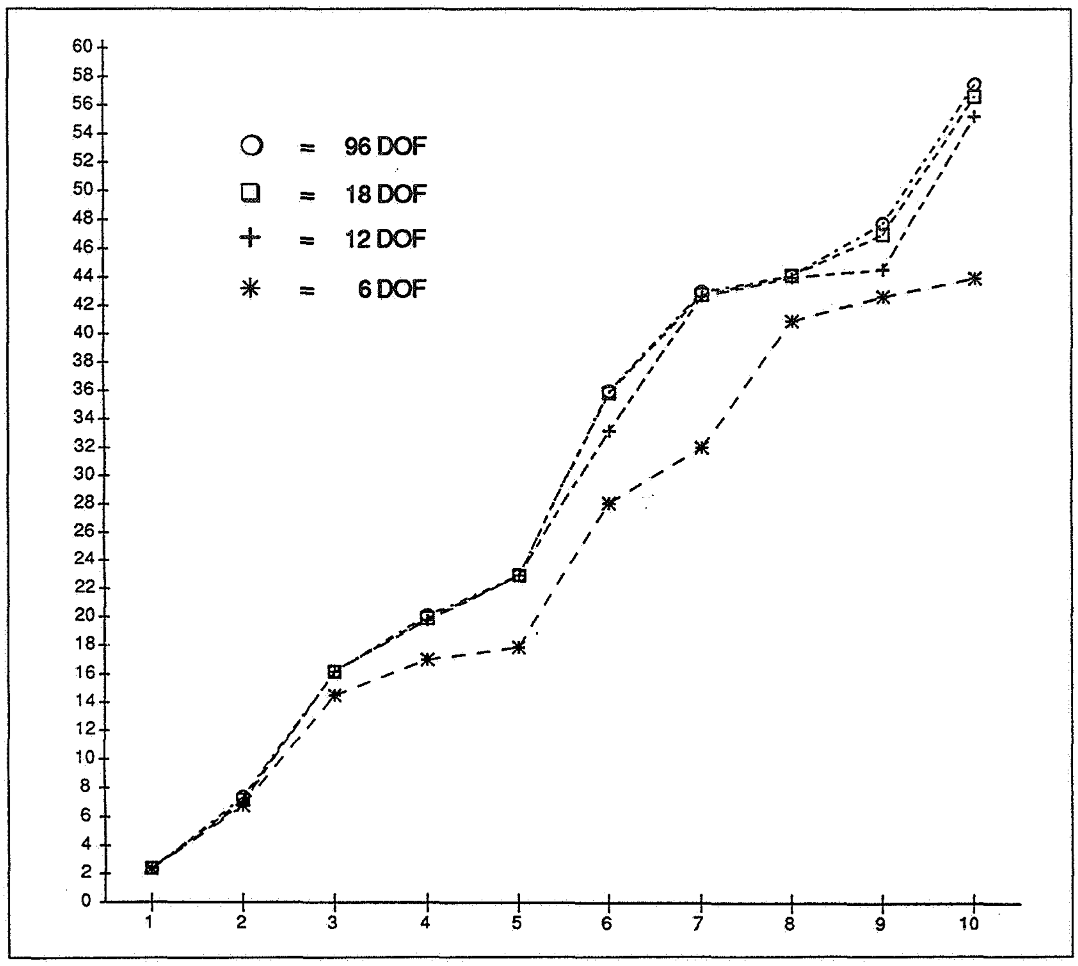

Fig. 2.2 Prediction accuracy with polynomials of varying degrees of freedom

S3-18
156023
P-4

500703
N93-29111

CONTROLS OF INTERACTION DYNAMICS OF ORBITAL ASSEMBLY

Renjeng Su

Building structures and spacecraft in orbit will require technologies for positioning, docking/berthing, and joining orbital structures. A fundamental problem underlying the operation of docking and berthing is that of controlling the contact dynamics of mechanical structures actuated by active mechanisms such as robotic devices. Control systems must be designed to control these active mechanisms so that both the free space motions and contact motions are stable and satisfy specifications on position accuracy and bounds on contact forces. For the large orbital structures of the future, the problem of interactive dynamics and control is fundamentally different in several ways than it was for spacecraft docking in the past. First, future space structures must be treated as flexible structures—the operations of docking, berthing and assembly will need to respect the vibrations of the structures. Second, the assembly of these structures will require multiple-point contact, rather than the essentially single-point positioning of conventional spacecraft docking. Third, some assembly operations require the subassemblies to be brought and held in contact so that successful joining can be accomplished.

A preliminary study of contact stability and compliance control design has resulted in the development of an analytical method and a design method to analyze stability. The analytical method analyzes the problem of stability when an actively-controlled structure contacts a passive structure. This method makes it possible to accurately estimate the stiffness of the passive structures with which the contact motion will become unstable.

The analytical results suggest that passivity is neither achievable in practice, nor necessary as a design concept. A contact control system need only be passive up to a certain frequency; beyond that frequency the system can be stabilized with sufficiently small gains. With this concept the Center has developed a design methodology for achieving desired compliant contact motions. This design method is based on H-infinity norm optimization, which makes it possible to consider both driving point mechanical impedance and systems robustness to modeling uncertainty. A laboratory facility has been set up to verify experimentally the analytical and design theory.

ORIGINAL PAGE
BLACK AND WHITE PHOTOGRAPH

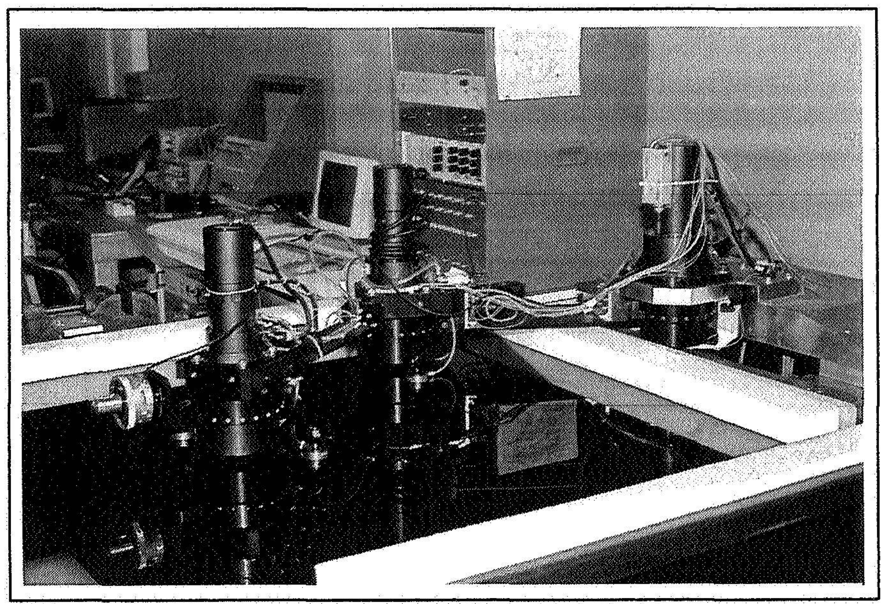

Fig 3.1 Planar robot manipulator testbed for interaction dynamics and control

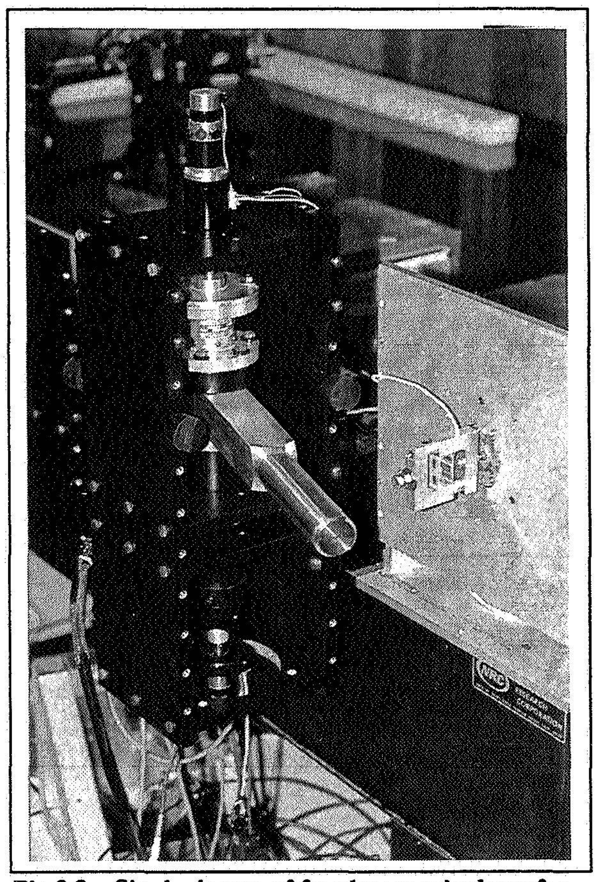

Fig 3.2 Single degree-of-freedom manipulator for interaction dynamics and control

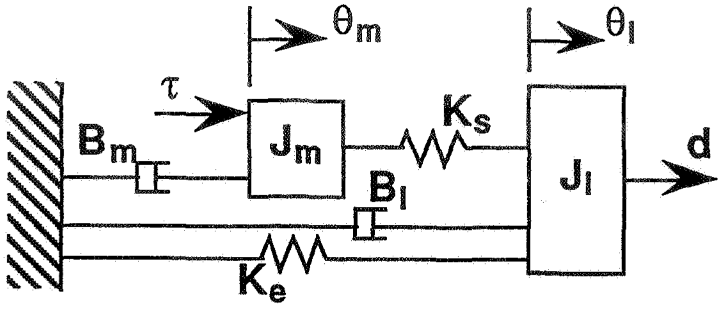

Parameter	Value	Units
Motor Inertia, J_m (reflected to output side)	0.0934	kg-m^2
Motor Viscous Damping, B_m (reflected to output side)	3.4	N-m/(rad/s)
Harmonic Drive Stiffness, K_s	1600	N-m/rad
Load Viscous Damping, B_l	0.7	N-m/(rad/s)
Representative Load Inertia, J_l	0.64	kg-m^2
Gear Ratio	100:1	N/A

Fig 3.3 Model and parameters of the testbed in Fig. 3.2

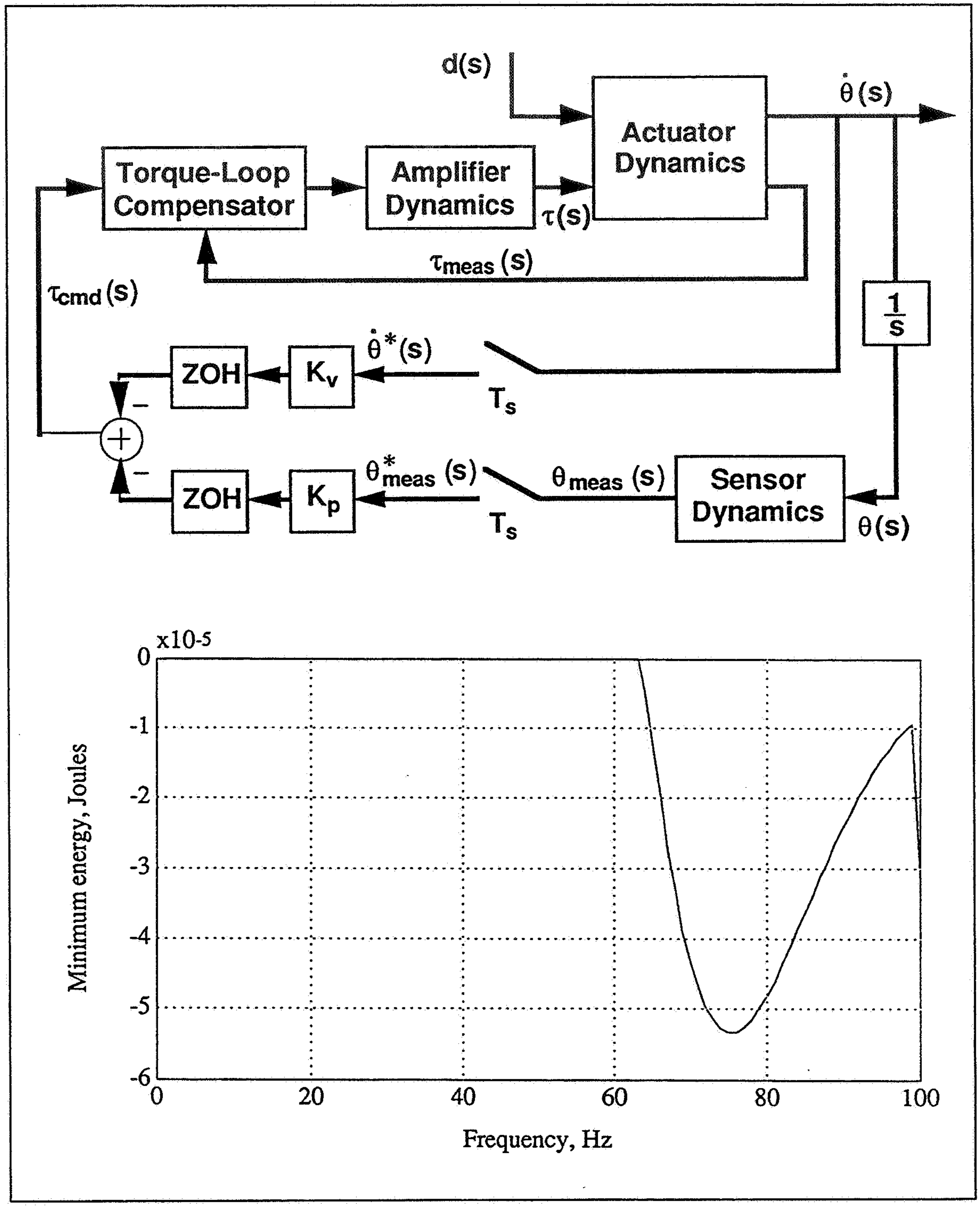

Fig 3.4 Model of the testbed with PD controller and passivity analysis

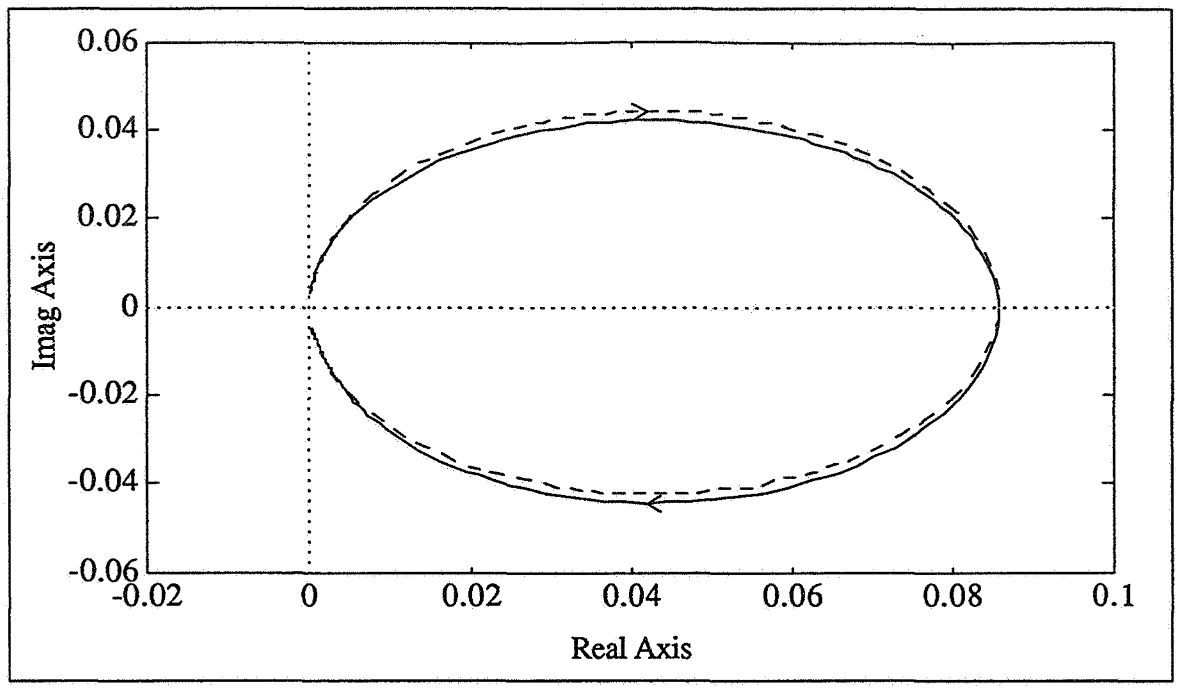

Fig 3.5 Nyquist diagram of the admittance

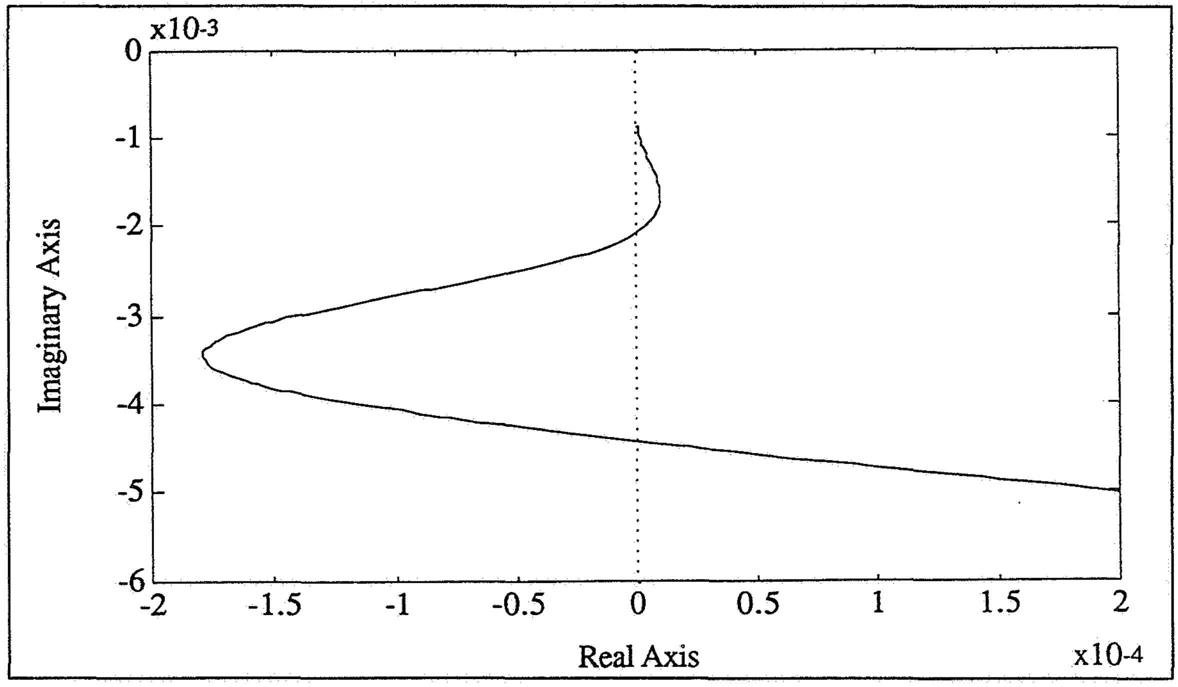

Fig 3.6 Nyquist diagram of the admittance above 50 Hz

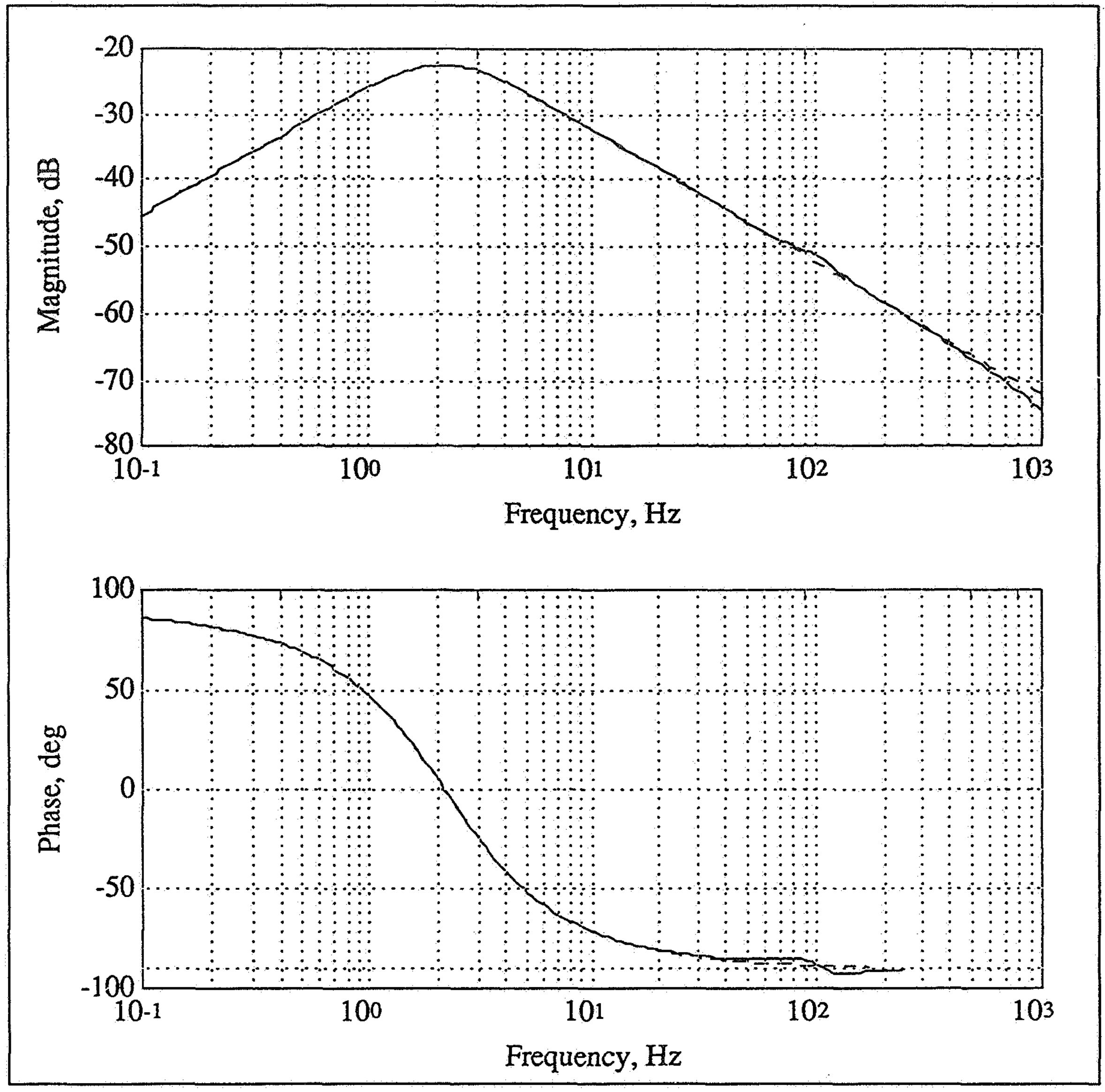

Fig 3.7 Achieved (solid line) and target (dashed line) admittance responses using H_∞ design method

S4-18

155694

P-4

506705

N93-29112

CONTROLS FOR SPACE STRUCTURES

Mark Balas

Assembly and operation of large space structures (LSS) in orbit will require robot-assisted docking and berthing of partially-assembled structures. These operations require new solutions to the problems of controls. This is true because of large transient and persistent disturbances, controller-structure interaction with unmodeled modes, poorly known structure parameters, slow actuator/sensor dynamical behavior, and excitation of nonlinear structure vibrations during control and assembly.

For on-orbit assembly, controllers must start with finite element models of LSS and adapt on line to the best operating points, without compromising stability. This is not easy to do, since there are often unmodeled dynamic interactions between the controller and the structure. The indirect adaptive controllers are based on parameter estimation. Due to the large number of modes in LSS, this approach leads to very high-order control schemes with consequent poor stability and performance. In contrast, direct model reference adaptive controllers operate to force the LSS to track the desirable behavior of a chosen model.

These schemes produce simple control algorithms which are easy to implement on line. One problem with their use for LSS has been that the model must be the same dimension as the LSS—i.e., quite large. We have developed a control theory based on the command generator tracker (CGT) ideas of Sobel, Mabins, Kaufman and Wen, Balas to obtain very low-order models based on adaptive algorithms. Closed-loop stability for both finite element models and distributed parameter models of LSS has been proved. In addition, successful numerical simulations on several LSS databases have been obtained. An adaptive controller based on our theory has also been implemented on a flexible robotic manipulator at Martin Mariettta Astronautics.

We have developed computation schemes for controller-structure interaction with unmodeled modes, the residual mode filters or RMF. At present, we have modified the RMF theory to compensate slow actuator/sensor dynamics. We are in the process of applying these new ideas to LSS simulations to demonstrate the ease with which we can incorporate slow actuator/sensor effects into our design. We have also shown that residual mode filter compensation can be modified for small nonlinearities to produce exponentially stable closed-loop control.

Accommodation for transient disturbances can be handled with the usual feedback design techniques. Persistent disturbances, however, require modification of the controller algorithms. We have developed a theory for disturbance-accommodating controllers based on reduced-order models of structures, and have obtained stability results for these controllers in closed-loop with large-scale finite element models of structures.

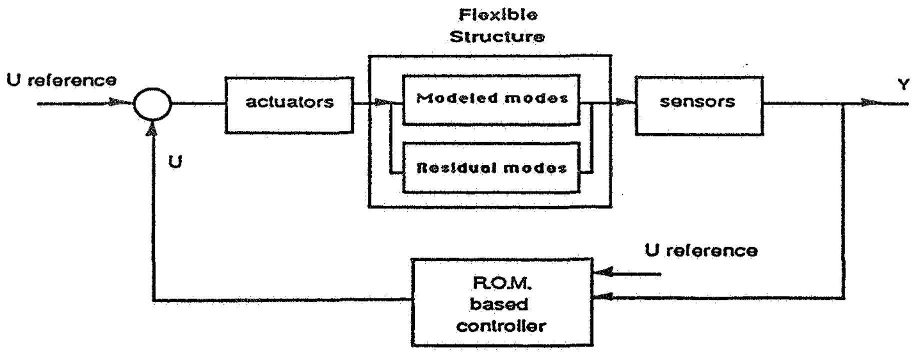

- Develop a R.O.M. controller, designed for performance.
- Dimension of the controller << dimension of the structure.

BUT

- Energy is pumped into all modes by the R.O.M. controller.
- Some residual modes may be driven unstable; this is known as Controller / Structure Interaction (C.S.I.)

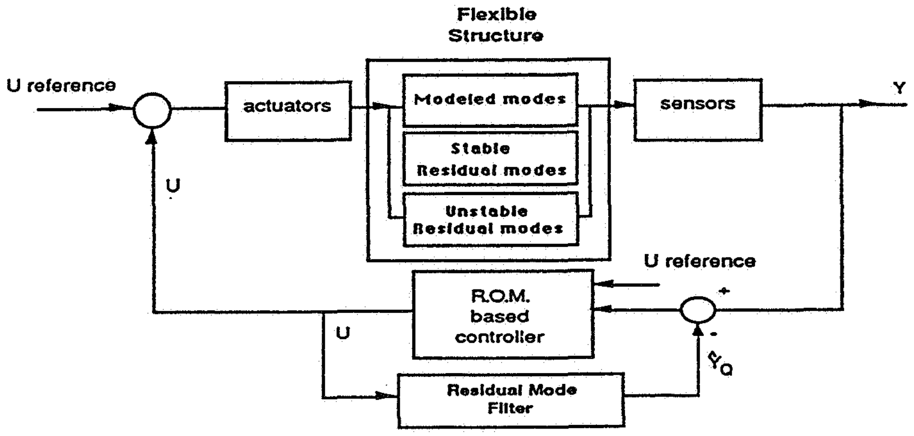

- Develop R.M.F. as a bank of parallel second-order filters; one filter for each unstable residual mode.
- R.M.F. interrupts the control loop around all unstable residual modes; R.O.M control input is screened.
- R.M.F. compensates for C.S.I. , insuring system stability.

Fig 4.1 Comparison of two methodologies for flexible structure control

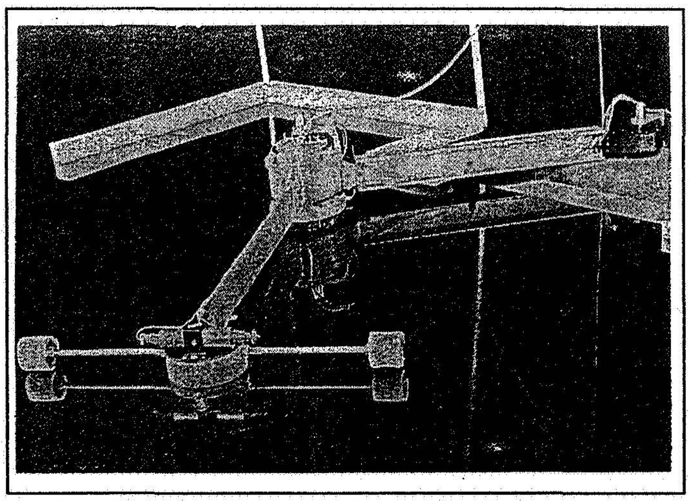

Fig 4.2 Flexible robot manipulator at Martin Marietta

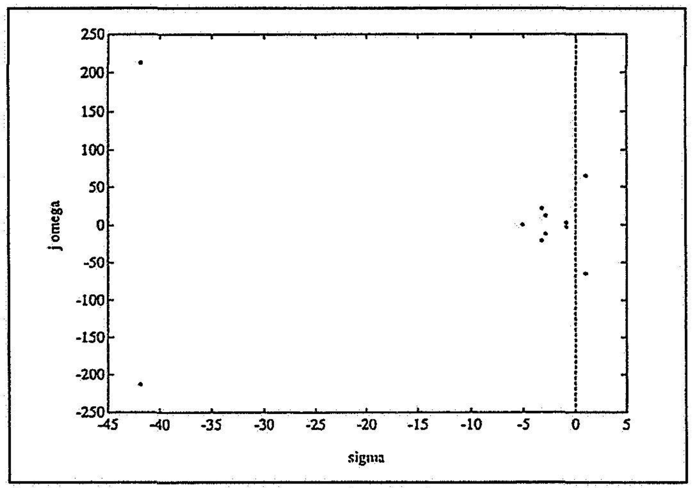

Fig 4.3 Closed loop poles without CSI compensation

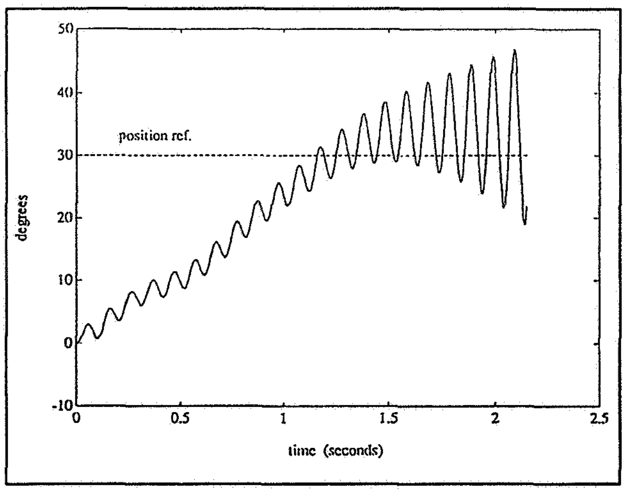

Fig 4.4 Hub position without CSI compensation

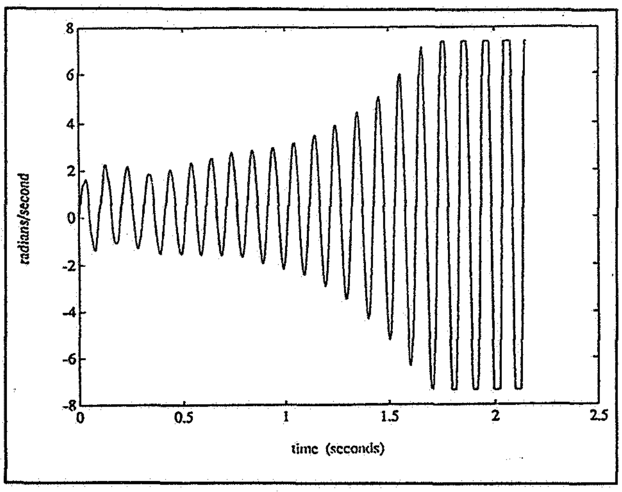

Fig 4.5 Hub velocity without CSI compensation

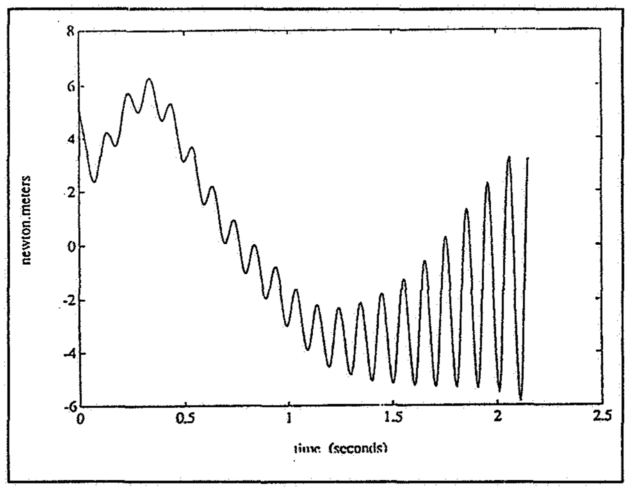

Fig 4.6 Control command without CSI compensation

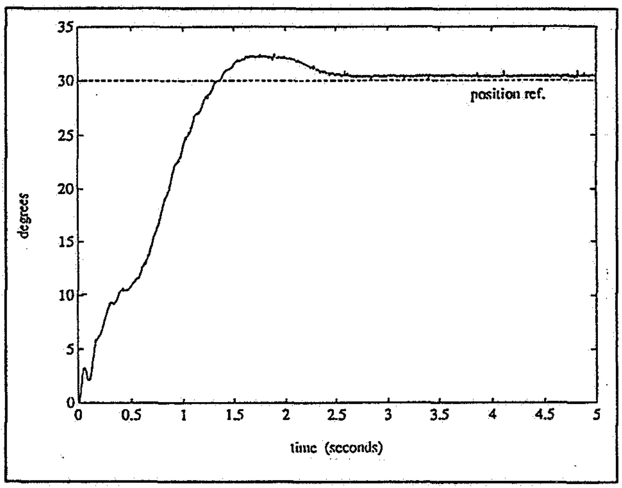

Fig 4.7 Hub position with CSI compensation

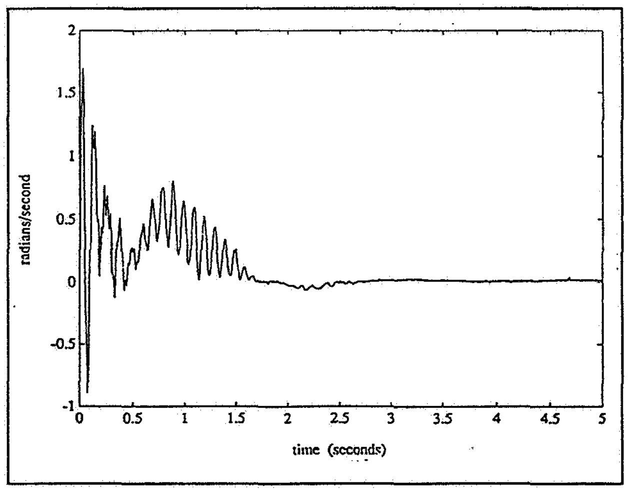

Fig 4.8 Hub velocity with CSI compensation

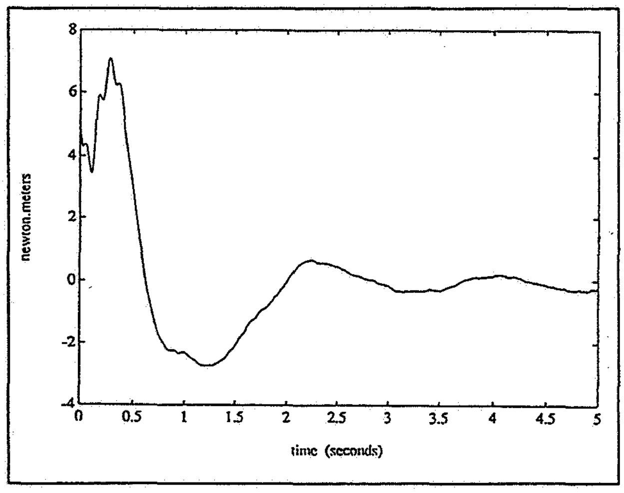

Fig 4.9 Control command with CSI compensation

/8
155695
p-3

500710

STRUCTURAL LOAD CONTROL DURING CONSTRUCTION

Martin M. Mikulas, Jr.

In the absence gravitational pull, the major design considerations for large space structures are stiffness for controllability, and transient dynamic loadings (as opposed to the traditional static load associated with earth-based structures). Because of the absence of gravitational loading, space structures can be designed to be significantly lighter than their counterparts on Earth. For example, the Space Shuttle manipulator arm is capable of moving and positioning a 60,000 lb payload, yet weighs less than 1,000 lbs. A recent design for the Space Station which had a total weight of about 500,000 lbs. used a primary load-carrying keel beam which weighed less than 10,000 lbs. For many large space structures designs it is quite common for the load-carrying structure to have a mass fraction on the order of one or two percent of the total spacecraft mass. This significant weight reduction for large space structures is commonly accompanied by very low natural frequencies. These low frequencies cause an unprecedented level of operational complexity for mission applications which require a high level of positioning and control accuracy. This control problem is currently the subject of considerable research directed towards reducing the flexibility problem. In addition, however, the small mass fraction typically results in structures which are quite unforgiving to inadvertent high loadings. In other words, the structures are "fragile."

In order to deal with the fragility issue CSC has developed a load-limiting concept for space truss structures. This concept is aimed at limiting the levels of load which can occur in a large space structure during the construction process as well as during subsequent operations. Currently, the approach for dealing with large loadings is to make the structure larger. The impact this has on construction is significant. The larger structures are more difficult to package in the launch vehicle, and in fact in some instances the concept must be changed from a deployable truss to an erectable truss to permit packaging. The new load-limiting concept is aimed at permitting the use in large space structures of smaller trusses with a high level of strength robustness, in order to simplify the construction process. To date several analyses conducted on the concept have demonstrated its feasibility, and an experiment is currently being designed to demonstrate its operation.

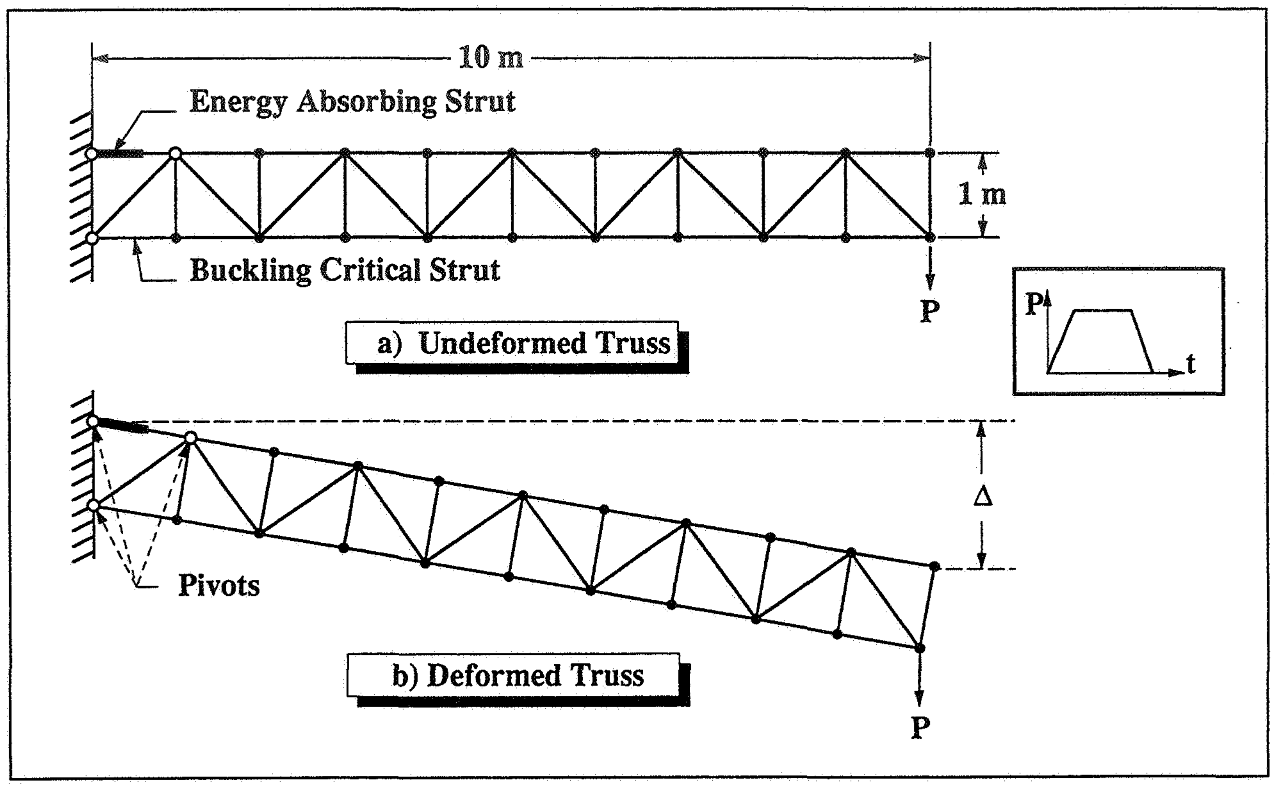

Fig 5.1 Example of a ten-bay long fail-safe truss

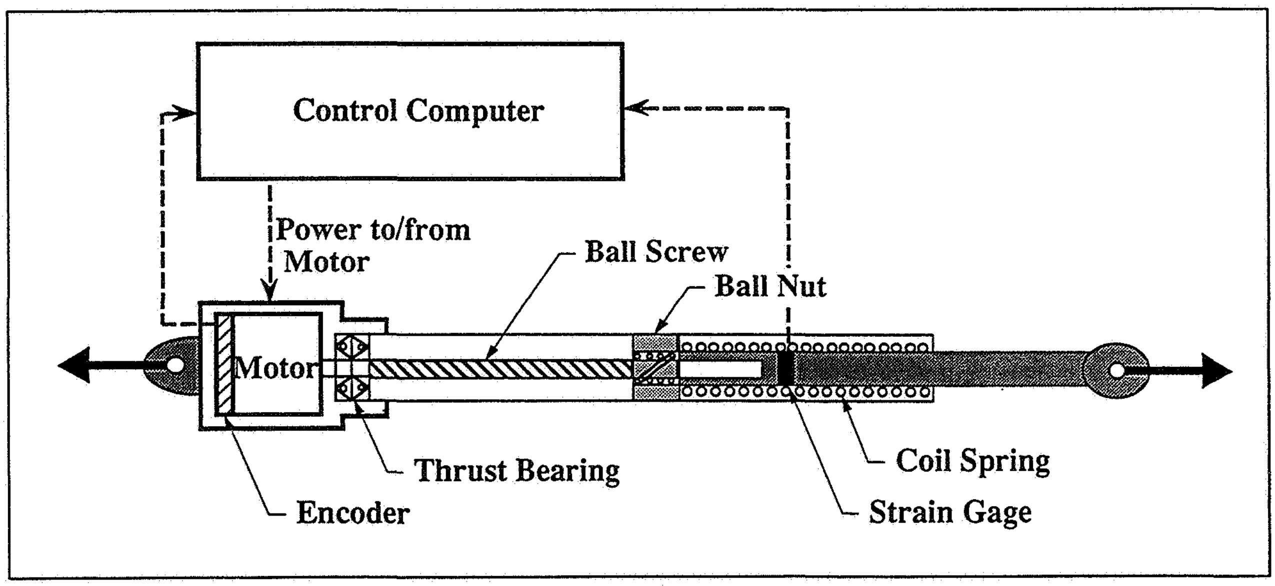

Fig 5.2 Linear load and motion control actuator (energy absorbing strut)

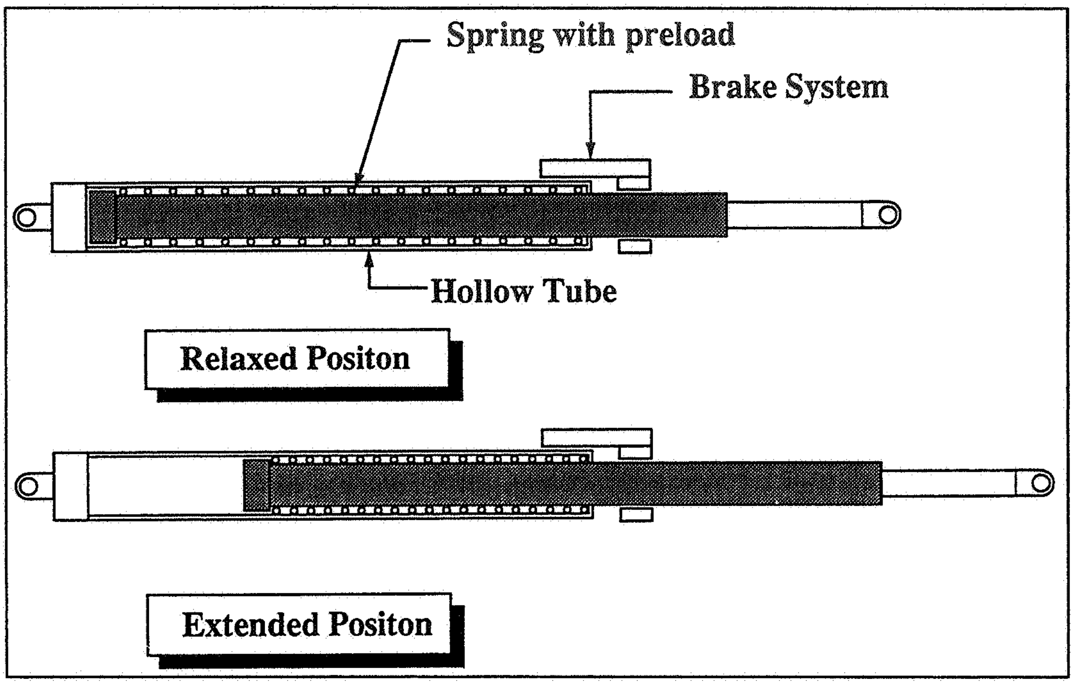

Fig 5.3 Schematics of energy-absorbing strut

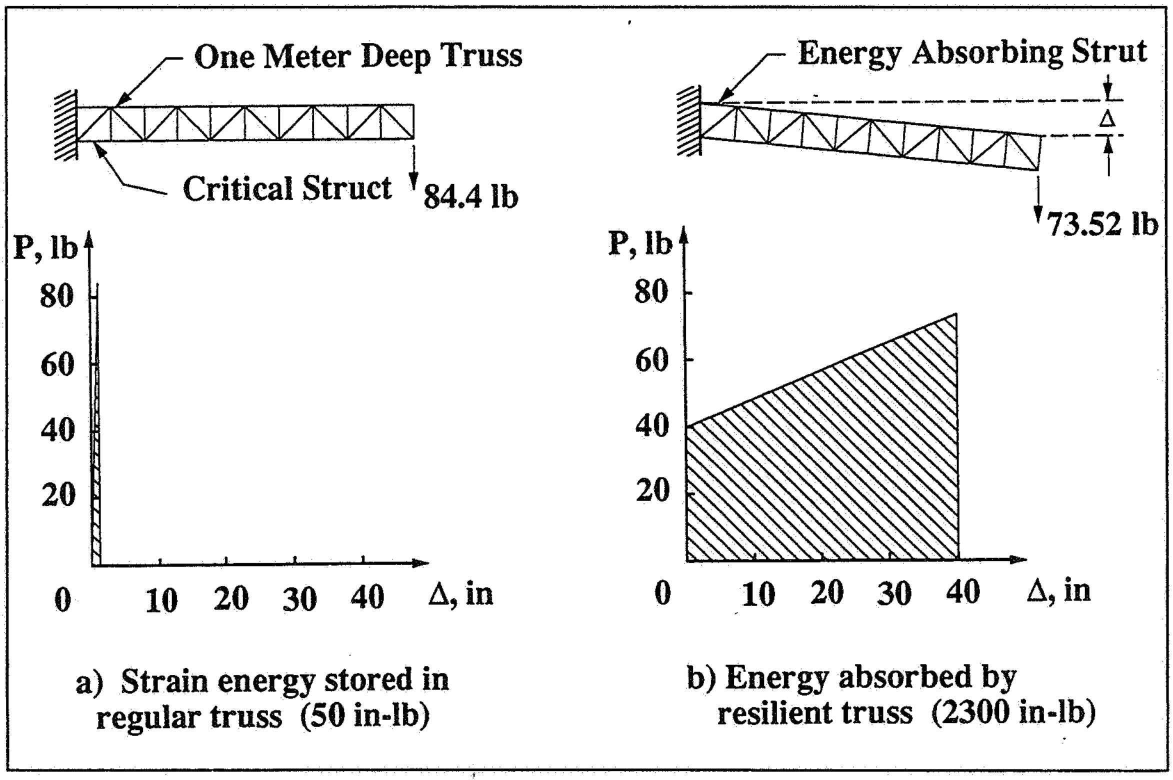

a) Strain energy stored in regular truss (50 in-lb)

b) Energy absorbed by resilient truss (2300 in-lb)

Fig 5.4 Stored energy characteristics of one-meter deep truss

SYSTEMS ENGINEERING STUDIES OF ON-ORBIT ASSEMBLY OPERATION

George W. Morgenthaler

While the practice of construction has a long history, the underlying theory of construction is relatively young. Very little has been documented as to techniques of logistic support, construction planning, construction scheduling, construction testing and inspection. The lack of "systems approaches" to construction processes is certainly one of the most serious roadblocks to the construction of space structures. System engineering research efforts at CSC are aimed at developing concepts and tools which contribute to a systems theory of space construction. The research is also aimed at providing means for trade-offs of design parameters for other research areas in CSC.

Systems engineering activity at CSC has divided space construction into the areas of orbital assembly, lunar base construction, interplanetary transport vehicle construction, and Mars base construction. A brief summary of recent results is given here.

Several models for "launch-on-time" have been developed. Launch-on-time is a critical concept to the assembly of such Earth-orbiting structures as the Space Station Freedom, and to planetary orbiters such as the Mars transfer vehicle. CSC has developed a launch vehicle selection model which uses linear programming to find optimal combinations of launch vehicles of various sizes (Atlas, Titan, Shuttles, HLLVs) to support SEI missions. Recently, the Center developed a cost trade-off model for studying on-orbit assembly logistics. With this model it was determined that the most effective size of the HLLV would be in the range of 120 to 200 metric tons to LEO, which is consistent with the choices of General Stafford's Synthesis Group Report.

A second-generation Dynamic Construction Activities Model ("DYCAM") process model has been under development, based on our past results in interruptability and our initial DYCAM model. This second-generation model is built on the paradigm of knowledge-based expert systems. It is aimed at providing answers to two questions: (1) What are some necessary or sufficient conditions for judging conceptual designs of spacecraft?, and (2) Can a methodology be formulated such that these conditions may be used to provide computer-aided tools for evaluating conceptual designs and planning for space assembly sequences? Early simulation results indicate that the DYCAM model has a clear ability to emulate and simulate human orbital construction processes.

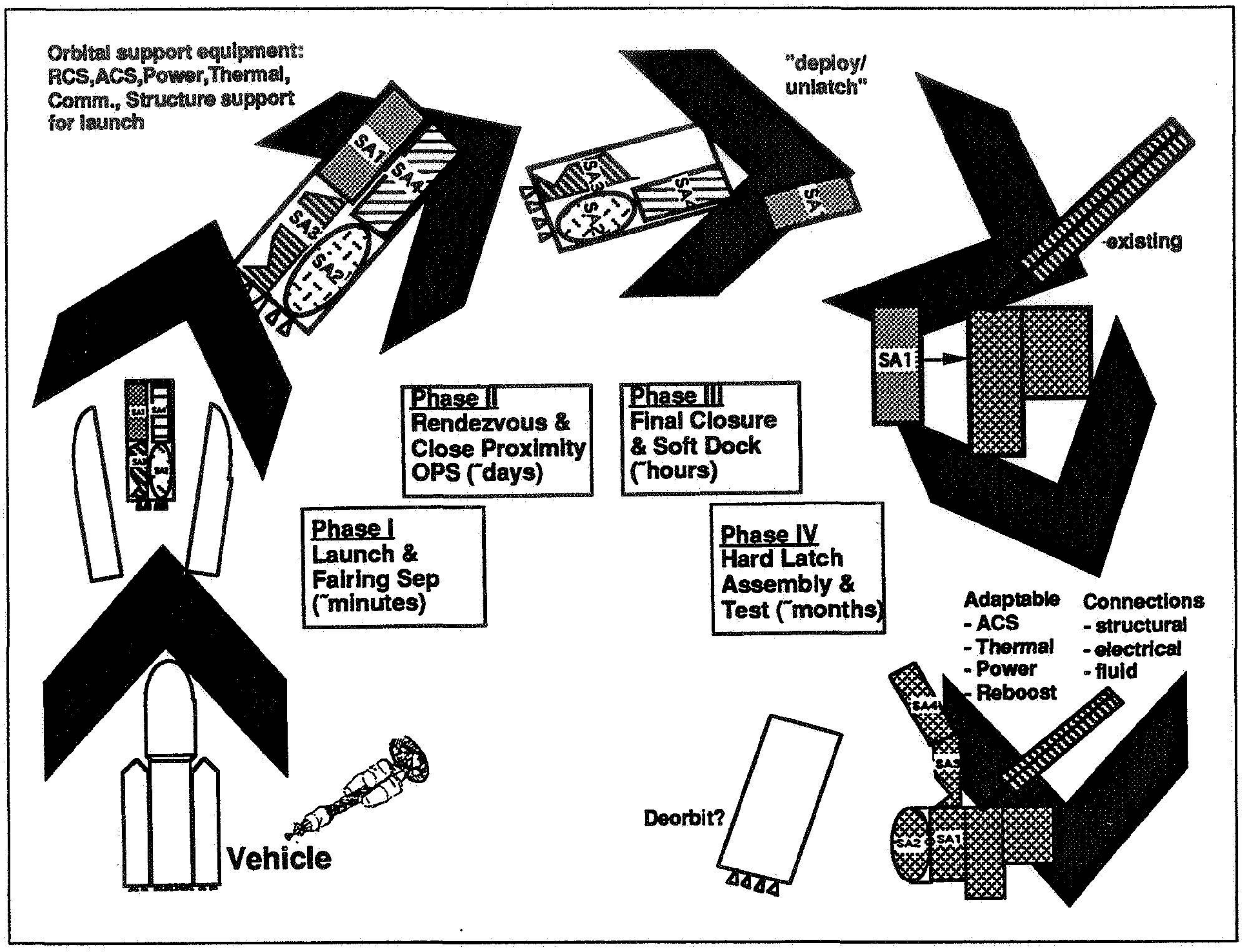

Fig 6.1   An orbital assembly scenario

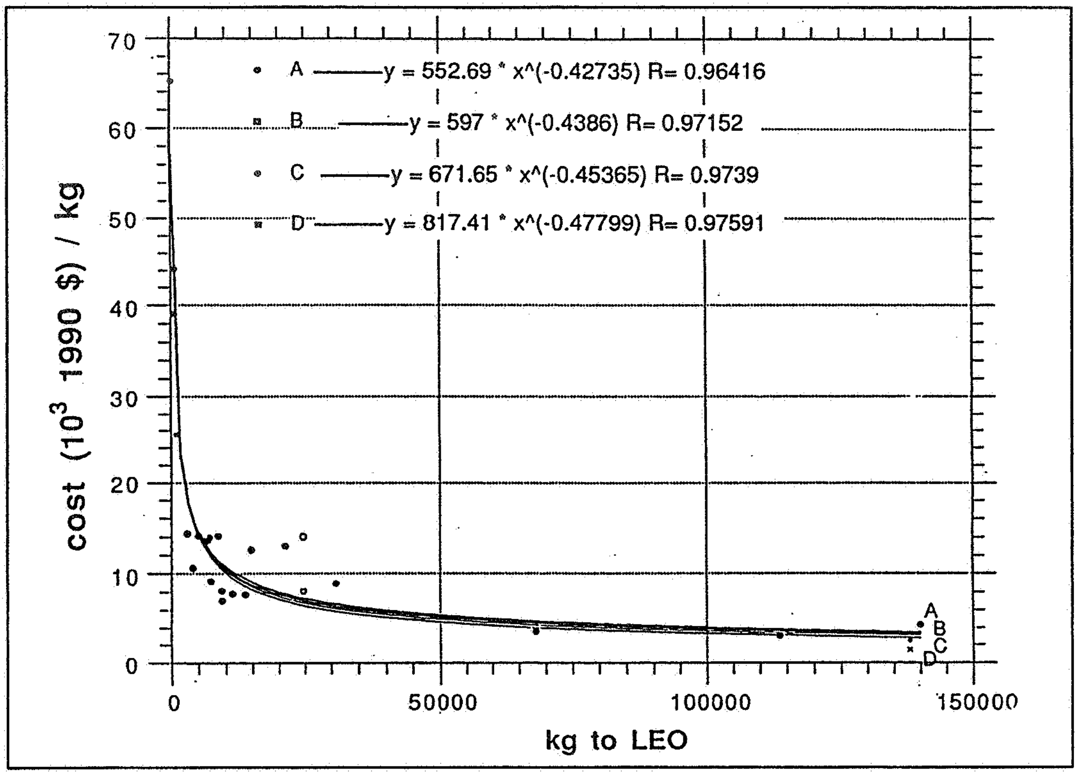

Fig 6.2 Cost/kg vs. kg to LEO

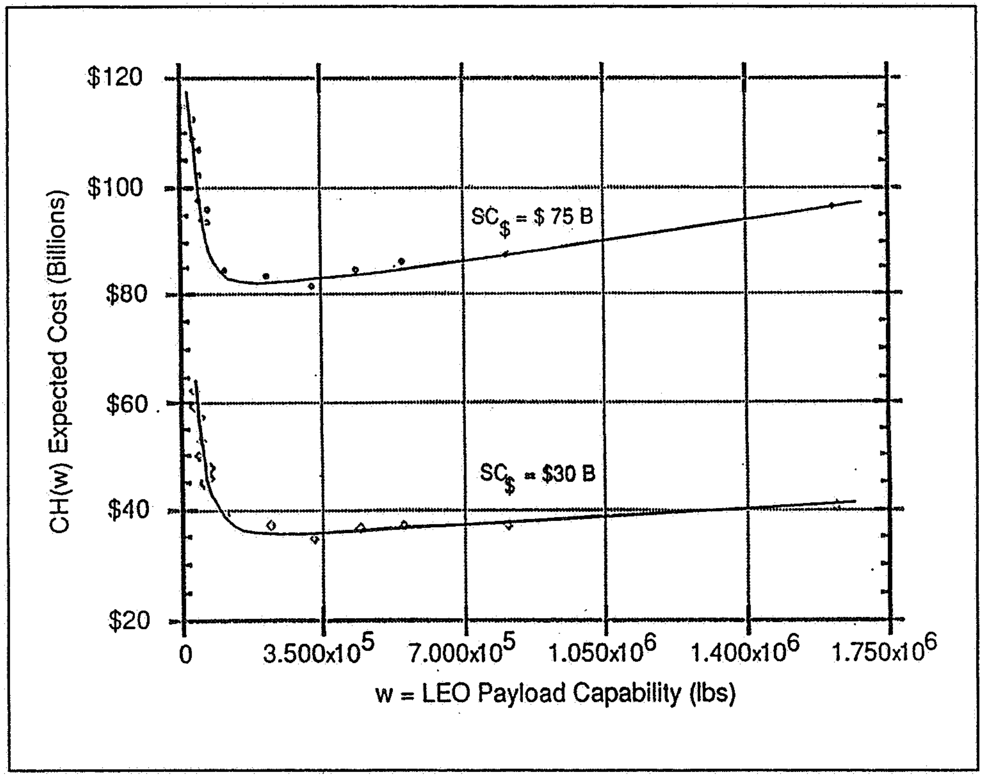

Fig 6.3 Total expected cost vs. LEO payload capability

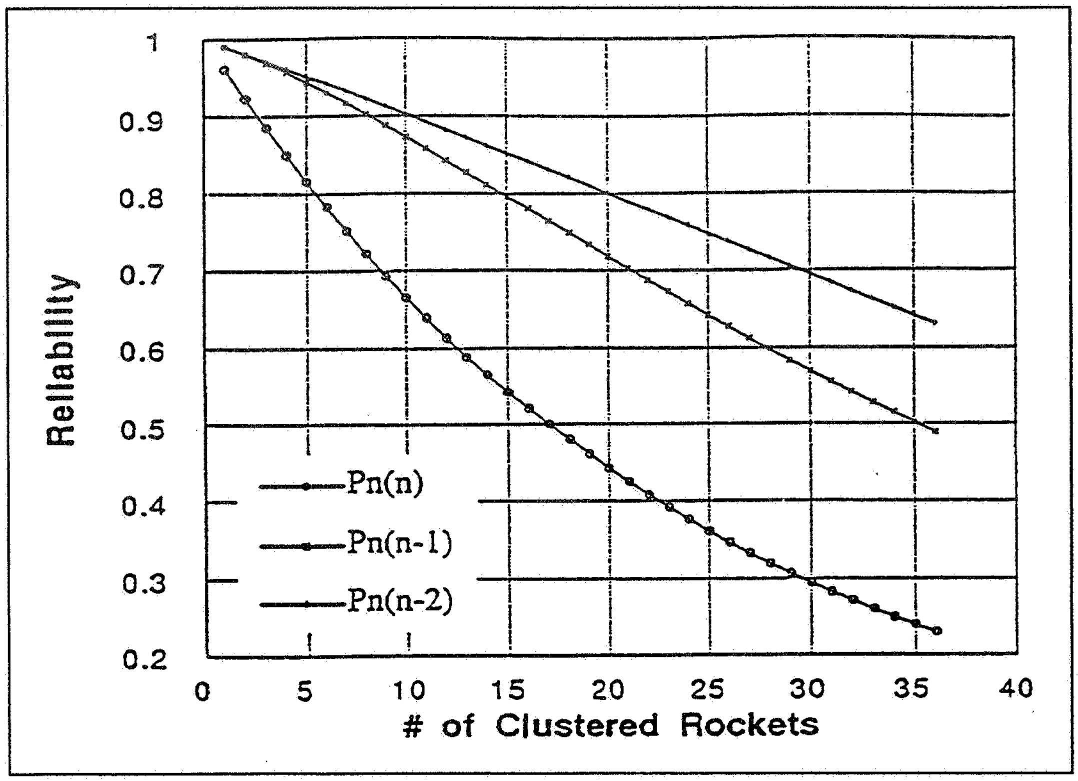

Fig 6.4 Launch vehicle reliability as a function of clustered rockets (p=0.96, r=0.25)

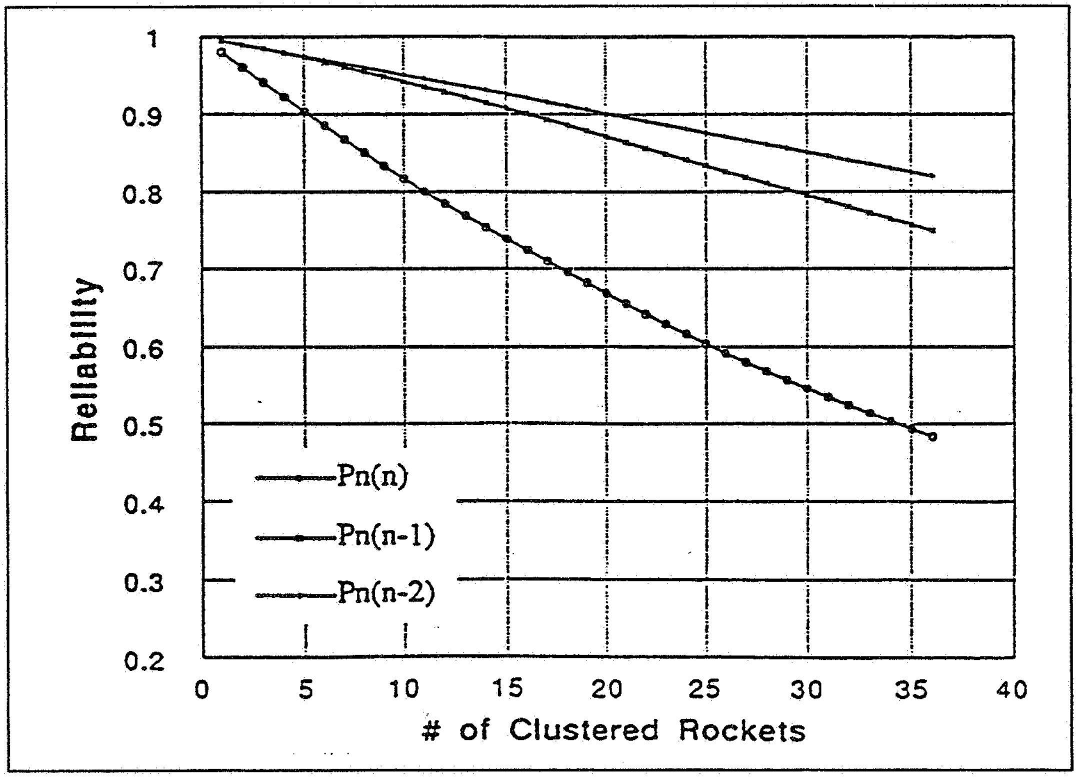

Fig 6.5 Launch vehicle reliability as a function of clustered rockets (p=0.98, r=0.25)

omit

LUNAR CONSTRUCTION

This project is a long-term effort to gain comprehensive insight into the problem of building structures on the moon and on planetary surfaces. Areas currently under investigation are lunar soil mechanics, lunar base radiation shielding, indigenous material processing, and construction equipment. Three types of construction equipment are being designed and prototyped in our laboratory. They are lunar cranes for material handling, lunar rovers for handling small construction jobs and surveying construction sites, and a lunar soil penetrator for excavating and preparing sites. In developing this equipment a key concern is to minimize human operations. The following summarizes recent research accomplishments for the eight tasks of the Lunar Construction Project.

S4-91
155097

506716

LUNAR REGOLITH DENSIFICATION

Hon-Yim Ko and Stein Sture

Core tube samples of the lunar regolith obtained during the Apollo missions showed a rapid increase in the density of the regolith with depth. Various hypotheses have been proposed for the possible cause of this phenomenon, including the densification of the loose regolith material by repeated shaking from the seismic tremors which have been found to occur at regular monthly intervals when the moon and earth are closest to one another. A testbed has been designed to study regolith densification. This testbed uses Minnesota Lunar Simulant (MLS) to conduct shaking experiments in the geotechnical centrifuge with an inflight shake table system. By reproducing realistic in-situ regolith properties, the experiment also serves to test penetrator concepts.

The shake table system has been designed and used for simulation experiments to study effects of earthquakes on terrestrial soil structures. It is mounted on a 15 g-ton geotechnical centrifuge in which the self-weight induced stresses are replicated by testing an n-th scale model in a gravity field which is n times larger than Earth's gravity. A similar concept applies when dealing with lunar prototypes, where the gravity ratio required for proper simulation of lunar gravity effects is that between the centrifugal acceleration and the lunar gravity.

Records of lunar seismic tremors, or moonquakes, have been obtained from Dr. Nakamura of the University of Texas for use in this study. Dr. Nakumura has been involved with lunar seismic studies for many years. While these records are being prepared for use as the input data to drive the shake table system, records from the El Centro earthquake of 1940 are being used to perform preliminary tests, using a soil container which was previously used for earthquake studies. This container has a laminar construction, with the layers free to slide on each other, so that the soil motion during the simulated earthquake will not be constrained by the otherwise rigid boundaries.

The soil model is prepared by pluviating the MLS from a hopper into the laminar container to a depth of 6 in. The container is mounted on the shake table and the centrifuge is operated to generate an acceleration of 10 times Earth's gravity or 60 times the lunar gravity, thus simulating a lunar regolith thickness of 30 ft. The shake table is then operated using the scaled "moonquake" as the input motion. One or more model moonquakes are used in each experiment, after which the soil is analyzed for its density profile with depth. This is accomplished by removing from the soil bed a column of soil contained within a thin rubber sleeve which has been previously embedded vertically in the soil during pluviation. This column of soil is transferred to a gamma ray device, in which the gamma ray transmission transversely through the soil is measured and compared with standard calibration samples. In this manner, the density profile can be determined.

Preliminary results to date are encouraging, and the Center plans to study the effects of duration of shaking, intensity of the shaking motion and the frequency of the motion.

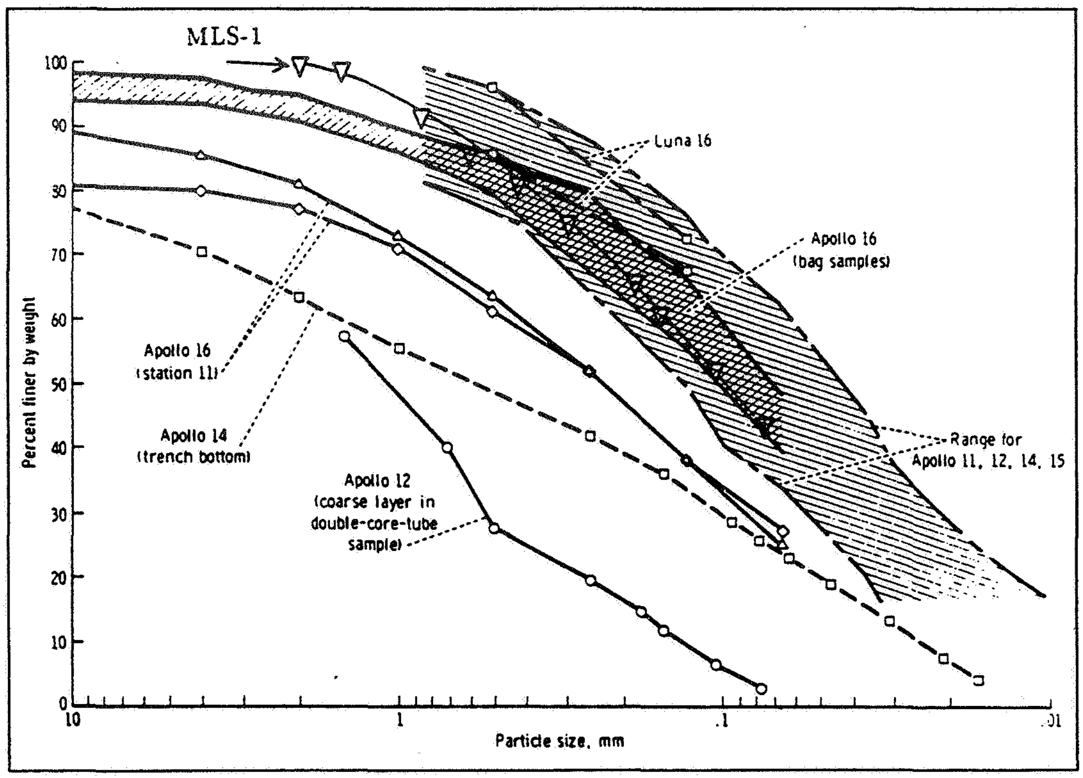

Fig 7.1 Grain size distribution curves for Apollo samples and recombined MSL-1

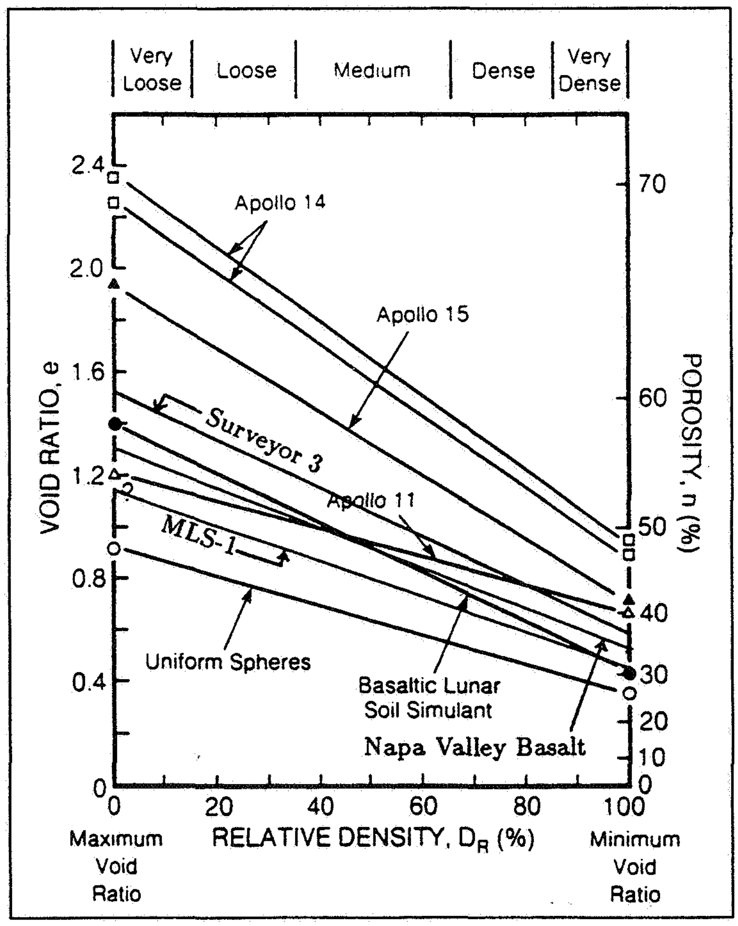

Fig 7.2 Maximum and minimum void ratio for lunar soil and simulants

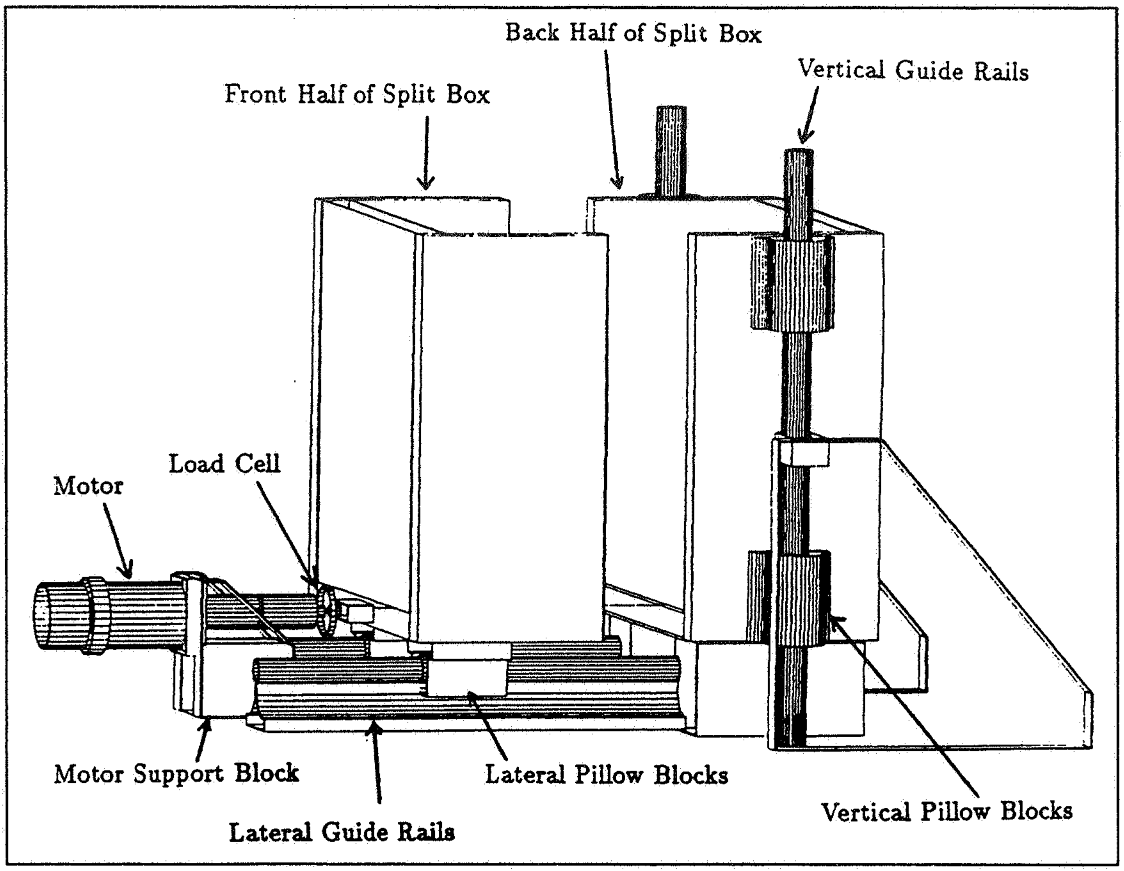

Fig 7.3 Direct tension device

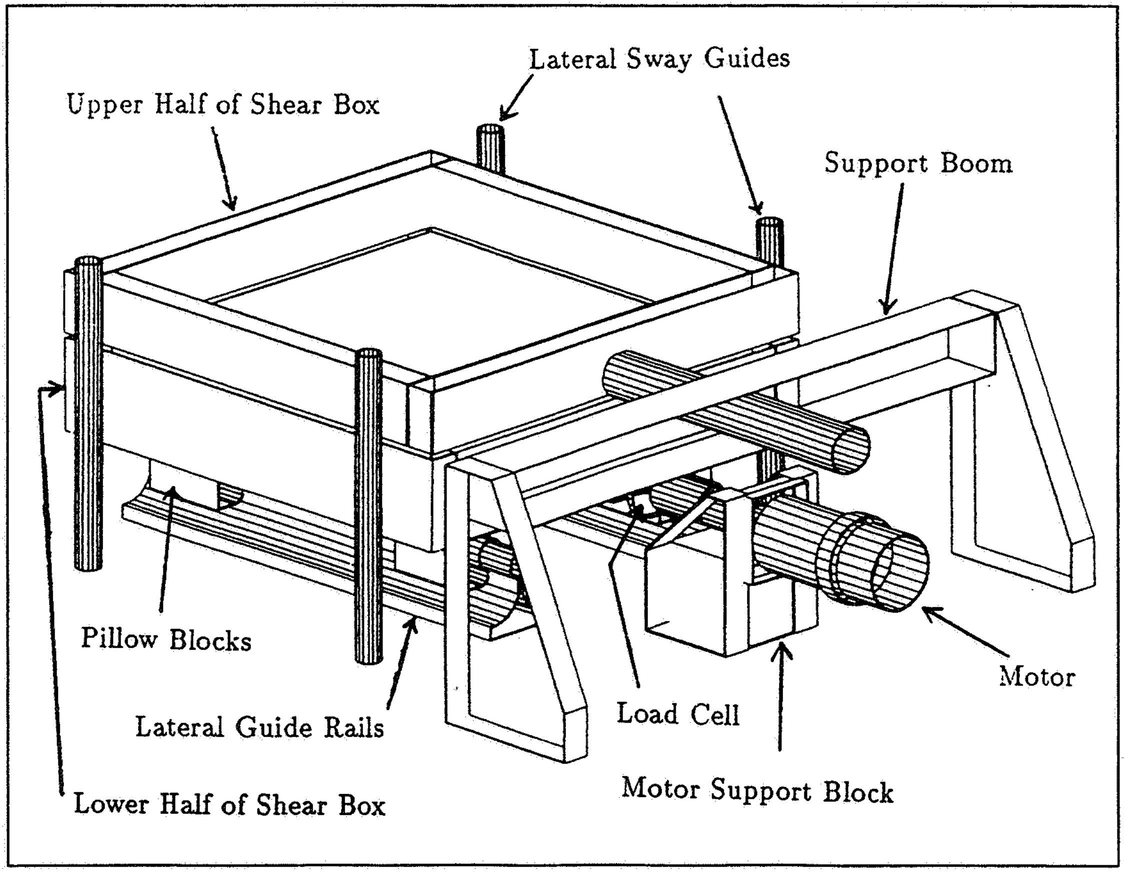

Fig 7.4 Direct shear device

500718
S8-91
155098
p 5

REGOLITH-STRUCTURE MODELING

Hon-Yim Ko and Stein Sture

Early lunar missions have provided a basic understanding of the physical and strength properties of lunar regolith, which have been shown to differ from those of dry terrestrial granular soils. Lunar regolith is predominantly a fine sand of which nearly 40% can be characterized as silt with a particle size smaller than 100 micrometers. The top 10 to 20 cm of the regolith can be characterized as being in a loose to medium-loose state. The density of the regolith, however, rapidly increases below a depth of 20 cm. The highly irregular and angular shapes of the regolith particles tend to interlock and create relatively strong mechanical bonds that give the particulate mass substantial cohesive properties and smaller amounts of tensile strength properties. In addition, the friction angle of lunar regolith at medium to high densities is quite high and often exceeds 55 degrees.

These known properties of lunar regolith have been matched in a terrestrially-manufactured analog known as Minnesota Lunar Simulant. A variety of experiments have been conducted using this simulant to both verify existing information and generate new information on the physical and constitutive properties of lunar regolith. These experiments include maximum and minimum density determinations, specific mass of solids, grain-size distribution, conventional triaxial compression and extension, isotropic compression, one-dimensional compression, direct shear and direct tension. Direct shear experiments have been conducted under atmospheric and vacuum conditions. Results of the physical and strength experiments compare closely to results obtained from lunar missions. Results of simulant strength experiments performed in vacuum indicated no observable difference from results obtained in air.

A testbed currently under study is one involving a regolith shield covering a first-generation human habitat module. We understand that regolith in depths ranging from 3 to 5 meters is required for radiation shielding for habitation and workspace. In our study the habitat module is treated as a rigid cylindrical tube with a smooth exterior. By making the cylinder rigid, we have reduced a complex interaction problem to a situation where we can consider the support regolith and the shielding regolith as behaving independently of the structural properties of the cylindrical structure. Medium-dense lunar simulant has been placed around a scaled model of the habitat module to provide a radiation shield. This embankment-type shield was constructed in relatively thin but fine layers by compacting, by mechanical vibratory means, layer upon layer of simulant placed adjacent to the horizontally-aligned cylinder. The slope angles were constructed at 55 degrees.

The model described above has been studied in a geotechnical centrifuge, which allows for the scaling of model dimensions to prototype dimensions by increasing the acceleration of gravity on the model. The deformation response can be scaled up to prototype dimensions to provide an assessment of the deformation patterns of the lunar structure. The actual process of local and/or global growth of instabilities or skip planes can also be observed.

Finite element techniques can be used to predict the response of the model in the geotechnical centrifuge, in order to validate the utility of the finite element analysis technique. The finite element model uses a plasticity-based constitutive model to describe the regolith material properties. This constitutive model has been calibrated (using the experiments described in the second paragraph above). The validated finite element model can then be used with a high degree of confidence to predict the response of other types of slope configurations with more complex geometries. These results will be of help to designers involved in cost-benefit studies of constructed lunar facilities.

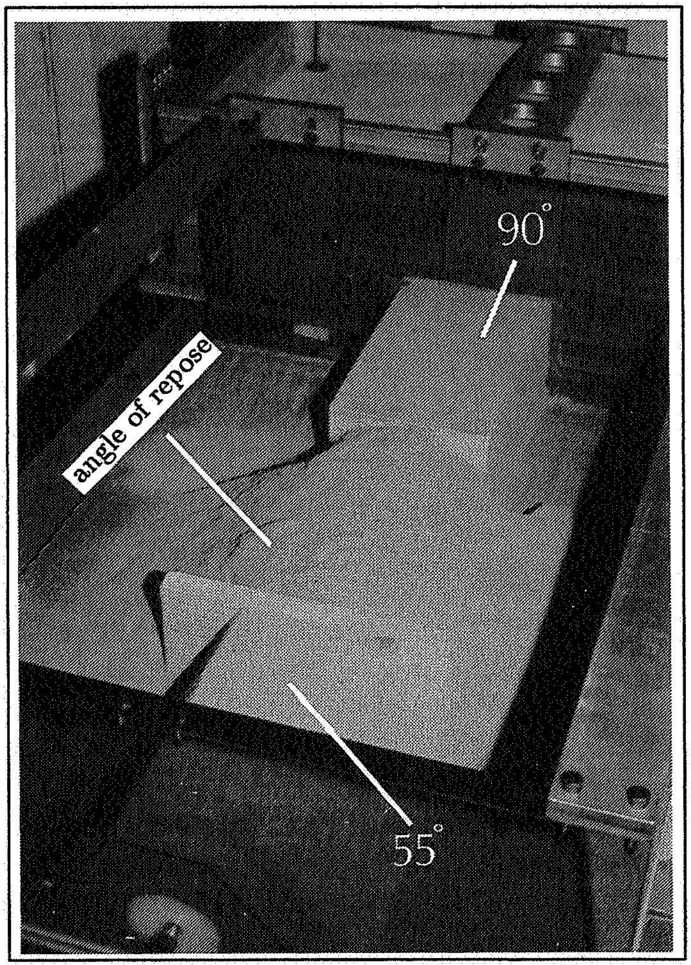

Fig 8.1 Demonstration models of 90°, 55° and angle of repose slopes for a regolith structure

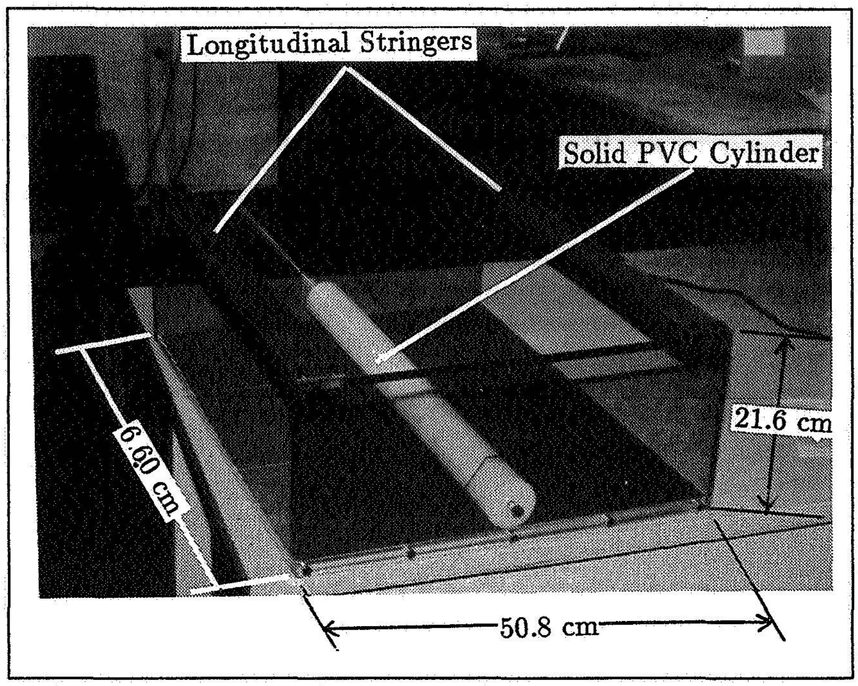

Fig 8.2 Centrifuge model slope container for a regolith structure

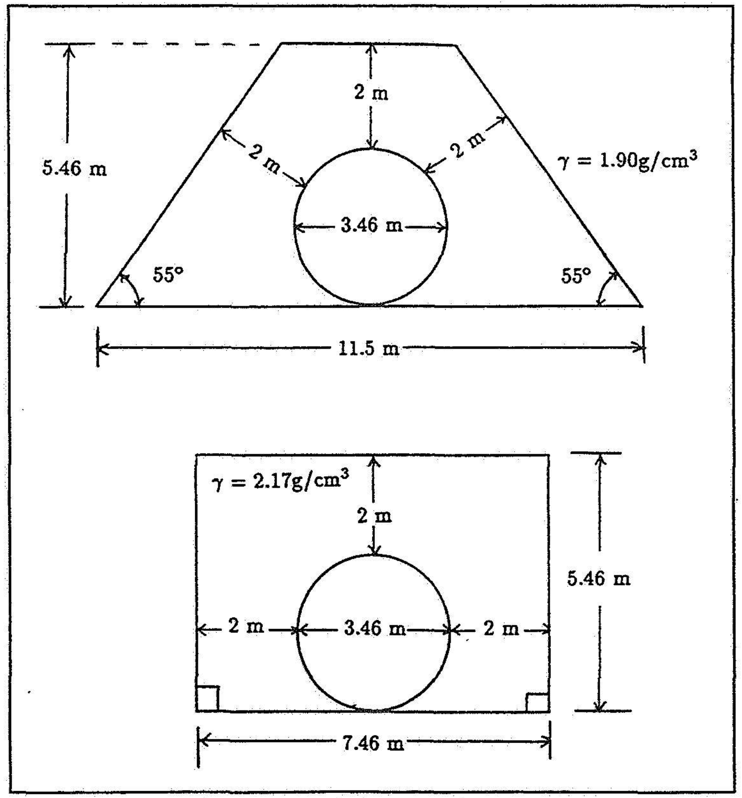

Fig 8.3 Lunar prototype H.H.M. dimensions

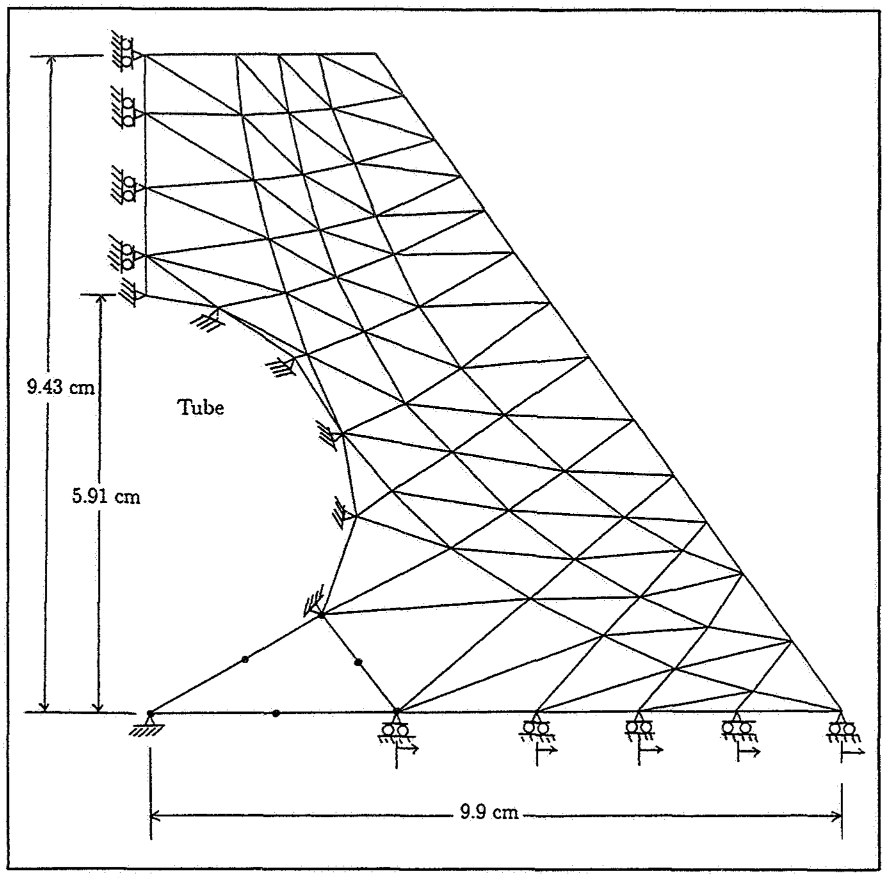

Fig 8.4 Finite-element model of the lunar habitat

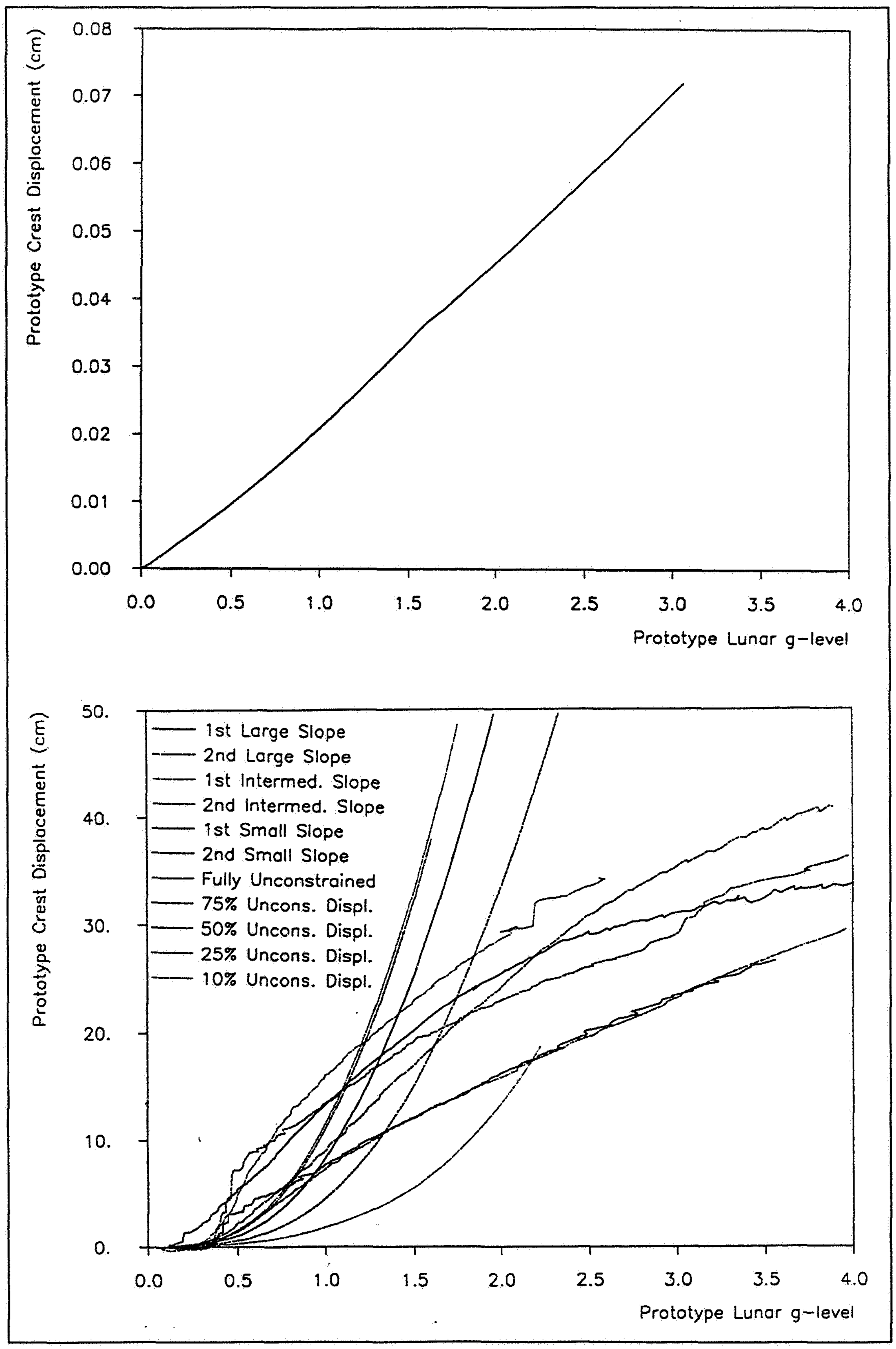

Fig 8.5 Influence of displacement condition of bottom nodes

39-91
155099
p- 2

506721

N93-29117

LUNAR REGOLITH PENETRATORS AND CUTTERS

Frank Barnes and Stein Sture

An apparatus has been designed and built for conducting simulation experiments on cutting tool penetration in the centrifuge. This equipment is mounted on the laminar container which is used for the regolith densification study, so that the end product of the latter, i.e., a regolith bed with the proper density profile, can be used directly for the penetration tests.

In this apparatus, an etching tool is suspended through a pulley system by the action of a double-acting air cylinder. By adjusting the air pressure acting on each side of the cylinder, the net downward force acting on the tool can be controlled. The penetration of the tool is measured by an LVDT. This apparatus has been proof-tested in the centrifuge and is ready for use in conjunction with the regolith densification experiments.

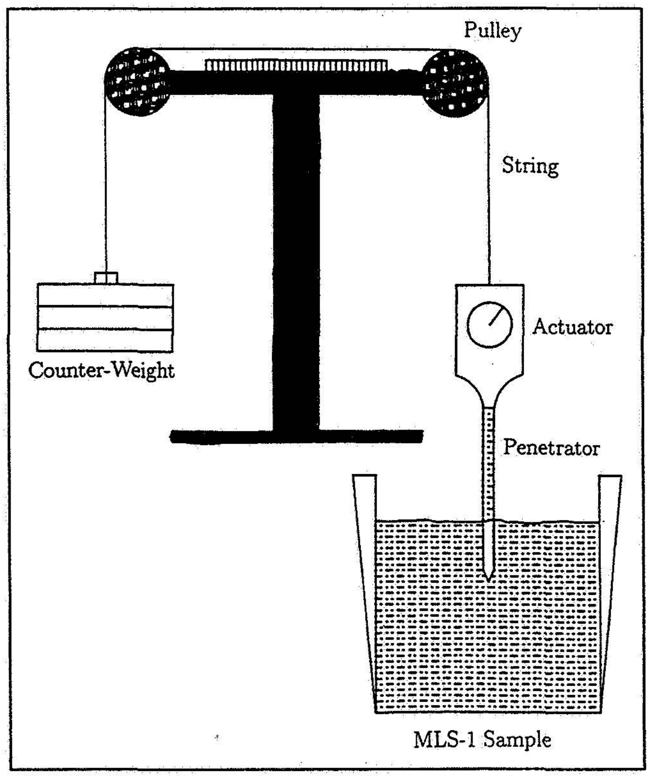

Fig 9.1 Experimental set-up of lunar regolith penetration study

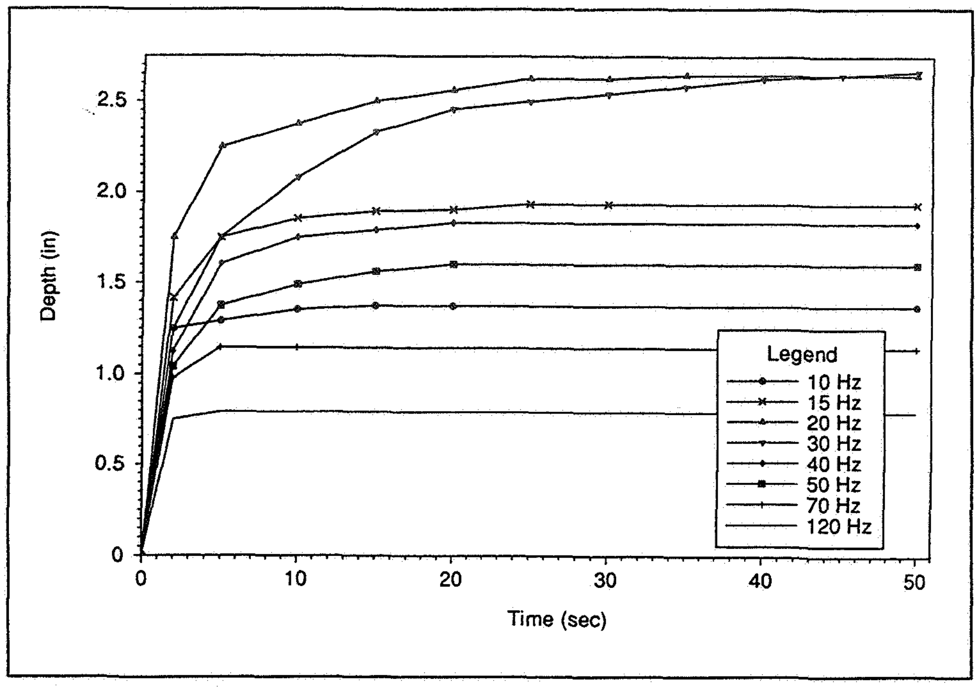

Fig 9.2 Average depth of 6"steel tip rod

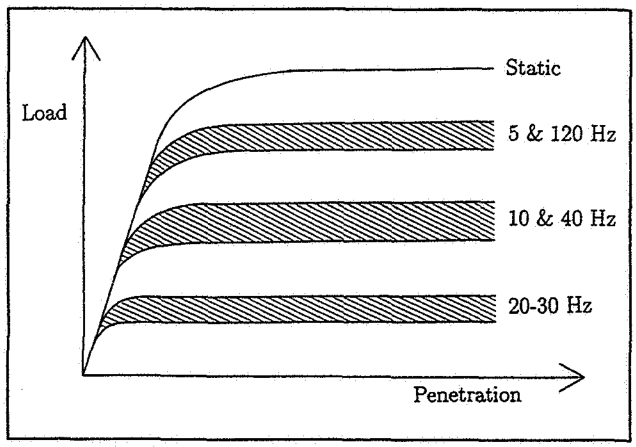

Fig 9.3 Static vs. vibrational assisted penetration

S1 37

150100

p-4

506723

N93-29118

LUNAR CRANE SYSTEM

Martin M. Mikulas, Jr.

In many lunar construction scenarios mechanical cranes in some form will be indispensible in moving large masses around with various degrees of fine positioning. While thorough experience exists in the use of terrestrial cranes, new thinking is required about the design of cranes to be used in extraterrestrial construction. The primary driving force for this new thinking is the need to automate the crane system so that space cranes can be operated as telerobotic machines with a large number of automatic capabilities. This is true because in extraterrestrial construction human resources will need to be critically rationed.

The design problems of mechanisms and control systems for a lunar crane must deal with at least two areas of performance. First, the automated crane must be capable of maneuvering a large mass, so that when the mass arrives at the target position there are only small vibrations. Secondly, any residue vibrations must be automatically damped out and a fine positioning must be achieved. For extraterrestrial use there are additional challenges to a crane design—for example, to design a crane system so that it can be transformed for other construction uses. This initial project in crane design does not address such additional issues, although they may be the subject of future CSC research.

To date the Center has designed and analyzed many mechanisms. The fundamental problem of trade-offs between passively stabilizing the load and actively controlling the load by actuators has been extensively studied. The capability of 3D dynamics modeling now exists for such studies. A scaled model of a lunar crane has been set up and it has been most fruitful in providing basic understanding of lunar cranes. Due to an interesting scaling match-up, this scaled model exhibits the load vibration frequencies one would expect in the real lunar case.

Using the analytical results achieved to date, a laboratory crane system is now being developed as a testbed for verifying a wide variety of mechanisms and control designs. Future development will be aimed at making the crane system a telerobotic testbed into which external sensors such computer vision systems, and other small robotic devices such as CSC lunar rovers, will be integrated.

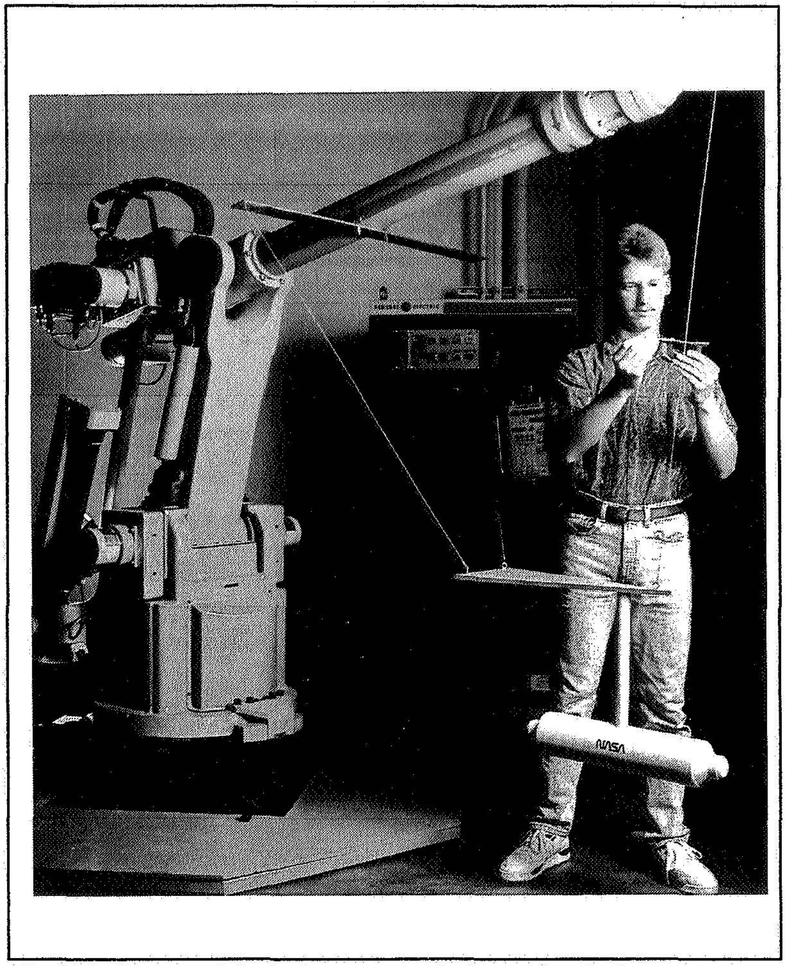

Fig 10.1 Scale model of a lunar crane design with robotic arm

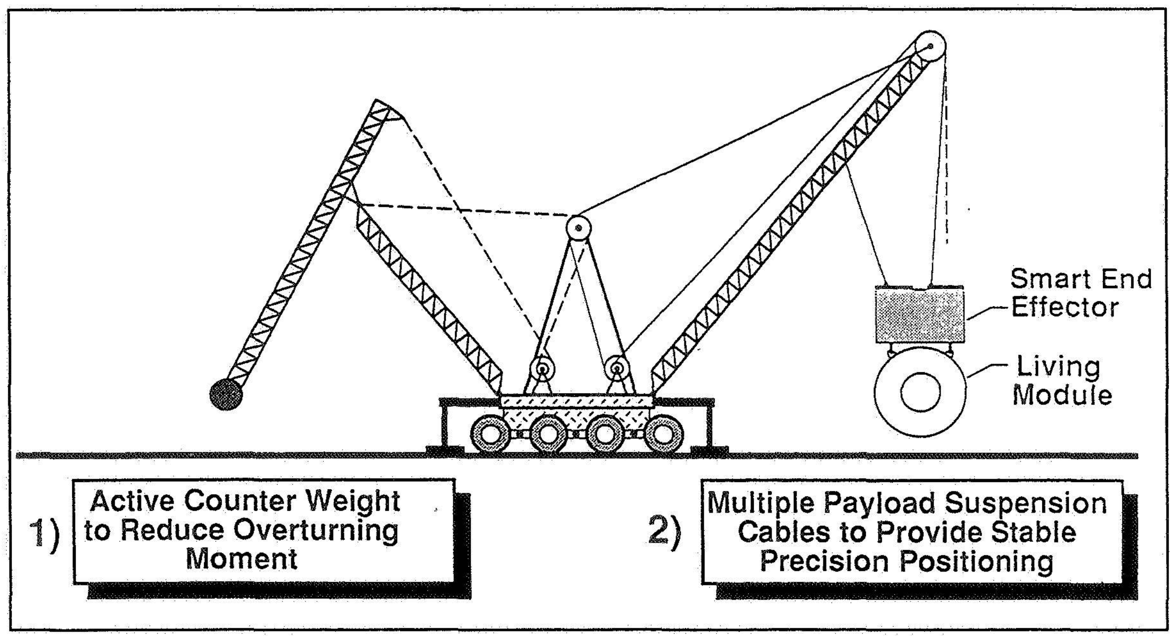

Fig 10.2 Counter-balanced actively-controlled lunar crane incorporating two new features for improved performance

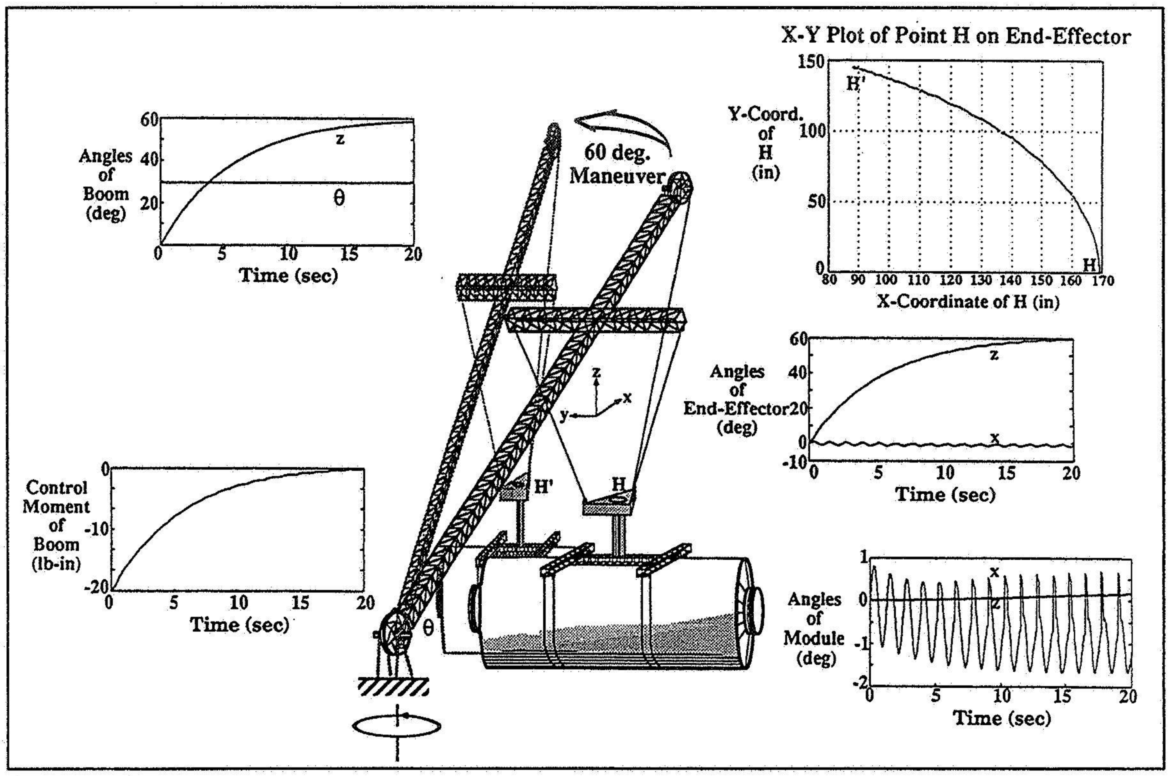

Fig 10.3 Slewing simulation results

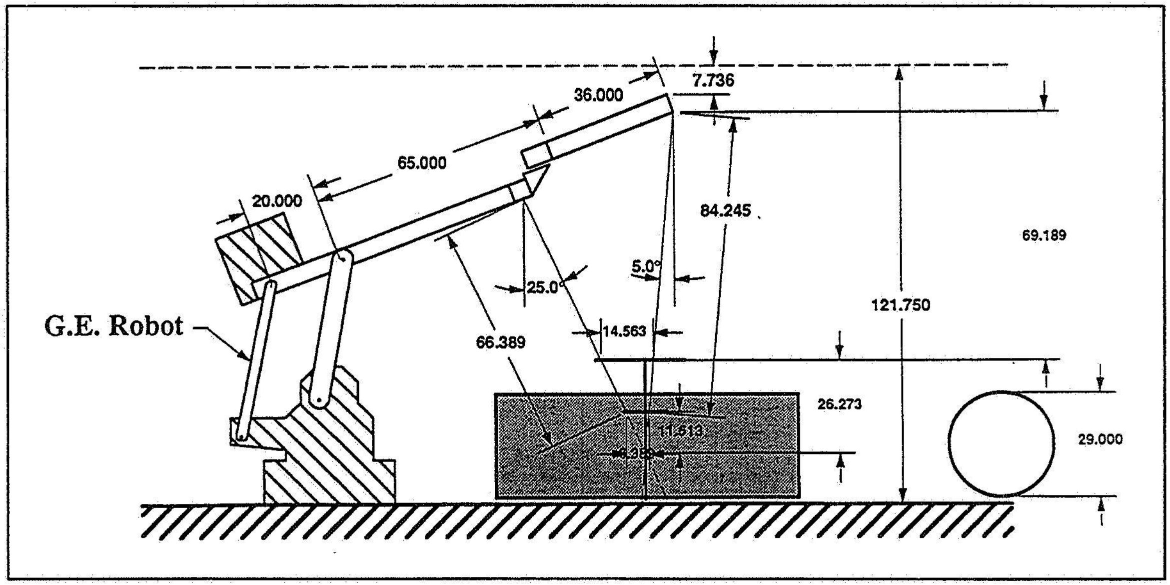

Fig 10.4 One-sixth scale lunar crane model

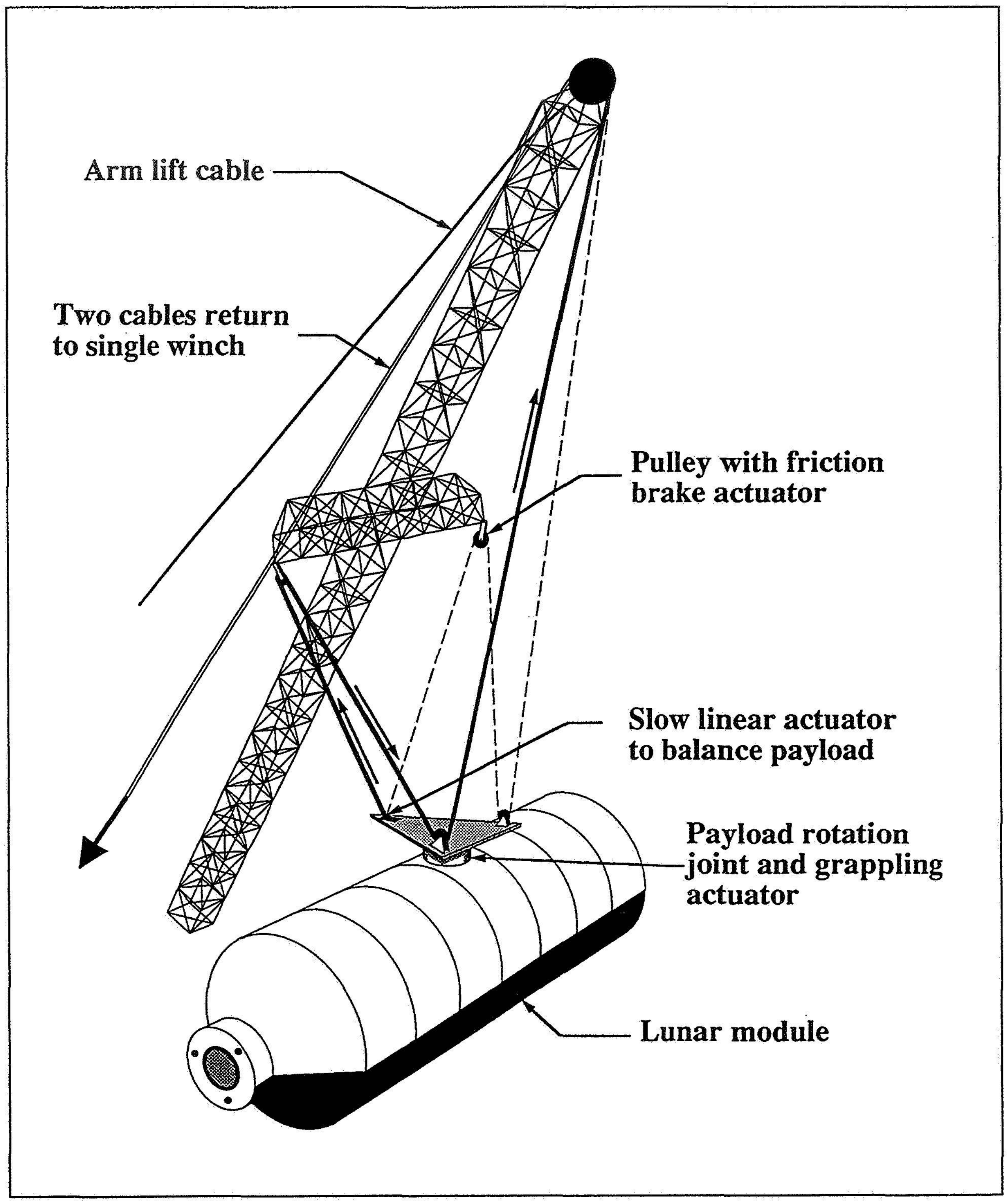

Fig 10.5 Lunar crane with modified Stewart platform

S11-37

155101

p-4

500725

N93-29119

LUNAR ROVERS AND LOCAL POSITIONING SYSTEM

James Avery and Renjeng Su

Telerobotic rovers equipped with adequate actuators and sensors are clearly necessary for extraterrestrial construction. They will be employed as substitutes for humans, to perform jobs like surveying, sensing, signaling, manipulating, and the handling of small materials. Important design criteria for these rovers include versatility and robustness. They must be easily programmed and reprogrammed to perform a wide variety of different functions, and they must be robust so that construction work will not be jeopardized by parts failures. The key qualities and functions necessary for these rovers to achieve the required versatility and robustness are modularity, redundancy, and coordination.

Three robotic rovers are being built by CSC as a testbed to implement the concepts of modularity and coordination. The specific goal of the design and construction of these robots is to demonstrate the software modularity and multi-robot control algorithms required for the physical manipulation of constructible elements. Each rover consists of a transporter platform, bus manager, simple manipulator and positioning receivers. These robots will be controlled from a central control console via a radio-frequency local area network (LAN).

To date, one prototype transporter platform frame has been built with batteries, motors, a prototype single-motor controller, and two prototype internal LAN boards. Software modules have been developed in C language for monitor functions, i/o, and parallel port usage in each computer board. Also completed are the fabrication of half of the required number of computer boards, the procurement of 19.2 Kbaud RF modems for inter-robot communications, and the simulation of processing requirements for positioning receivers. In addition to the robotic platform, the fabrication of a local positioning system based on infra-red signals is nearly completed. This positioning system will make the rovers into a moving reference system capable of performing site surveys. In addition, a four-degree mechanical manipulator especially suited for coordinated teleoperation has been conceptually designed and is currently being analyzed. This manipulator will be integrated into the rovers as their end effector.

We are now using 20 internal LAN cards fabricated by a commercial firm, have built a prototype manipulator and a range finder for a positioning system, have designed a prototype two-motor controller, and have one of the robots performing its first telerobotic motion. In addition, we have coordinated and tested the robots' internal LANs, have completed hardware design upgrades based on fabrication and fit experience, and have the positioning system running. The rover system is able to perform simple tasks such as sensing and signaling; coordination systems which allow construction tasks to begin have been established, and soon coordinated teams of robots in the laboratory will be able to manipulate common objects.

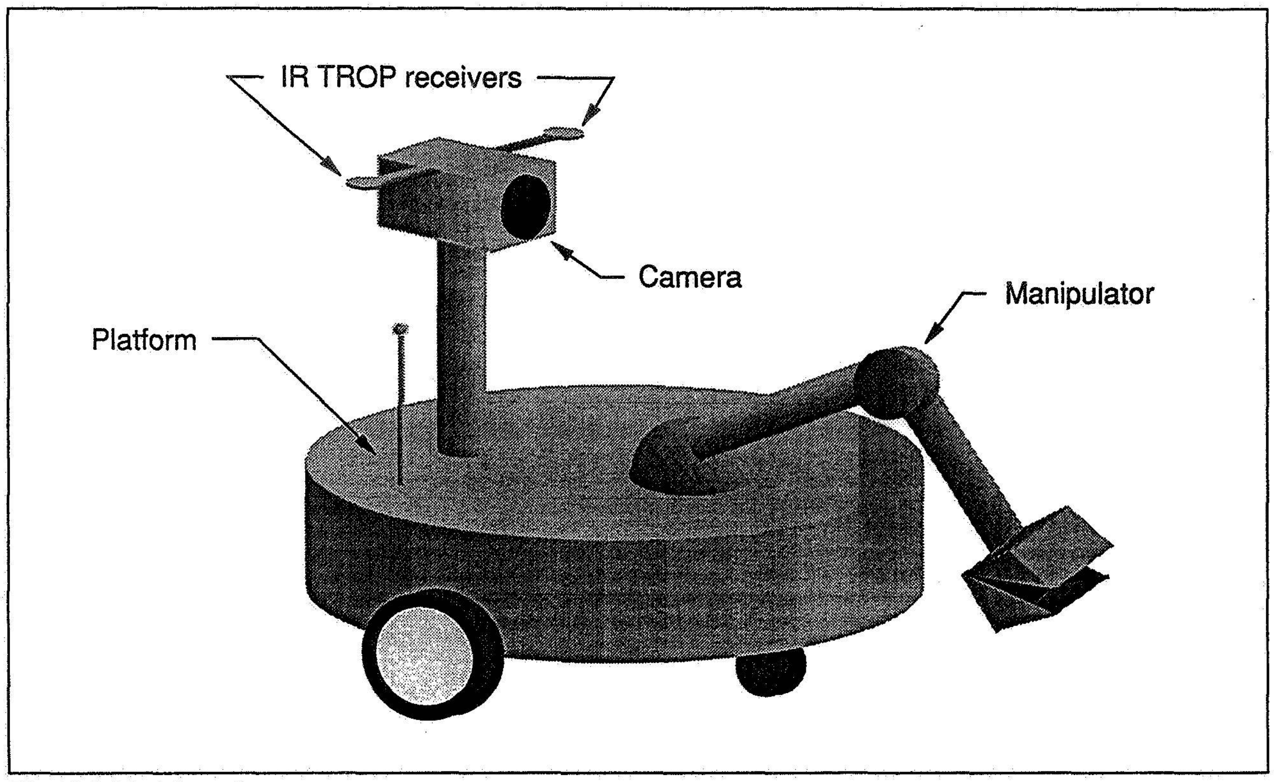

Fig 11.1 Modular robot

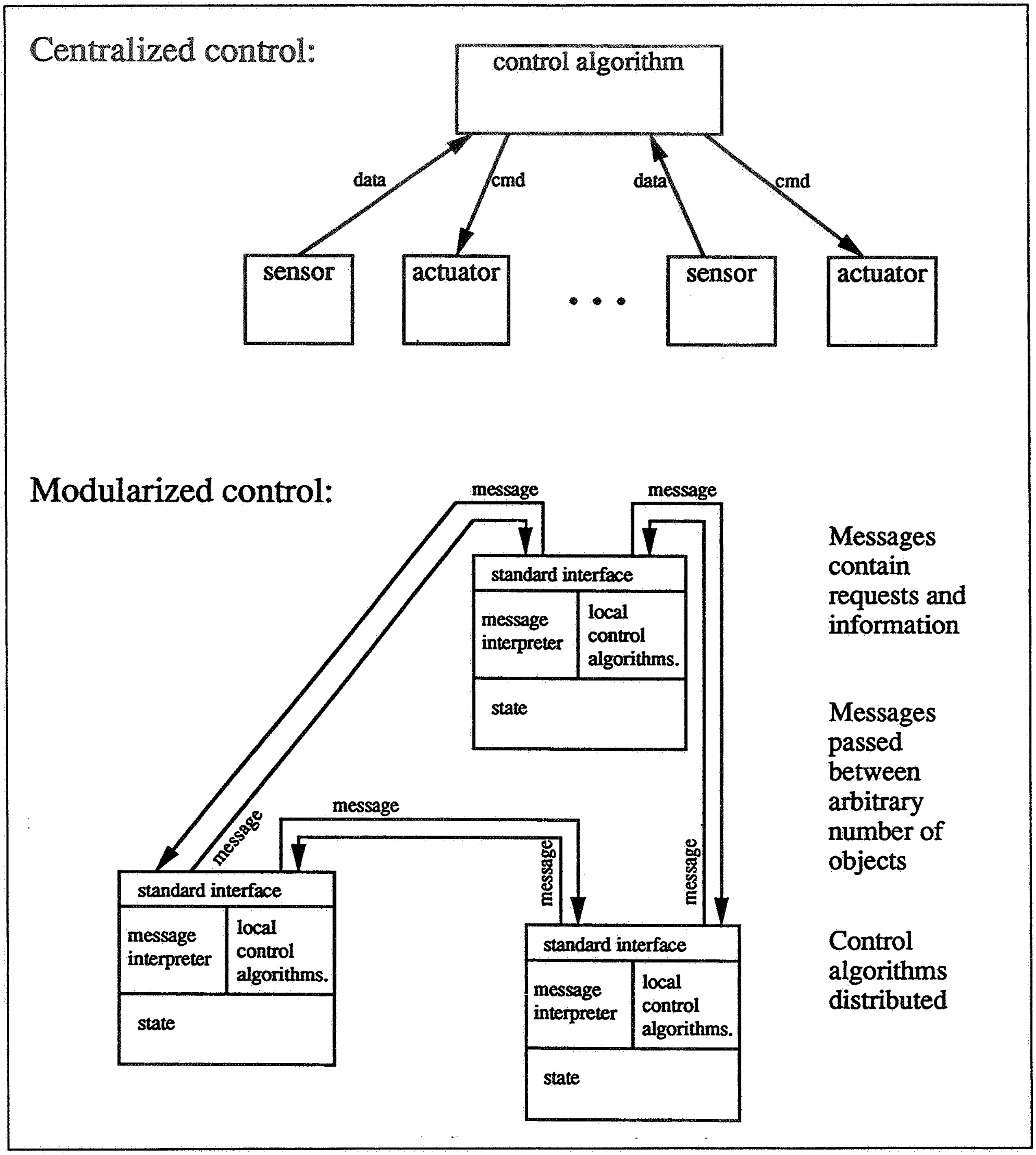

Fig 11.2 Centralized vs. modularized control

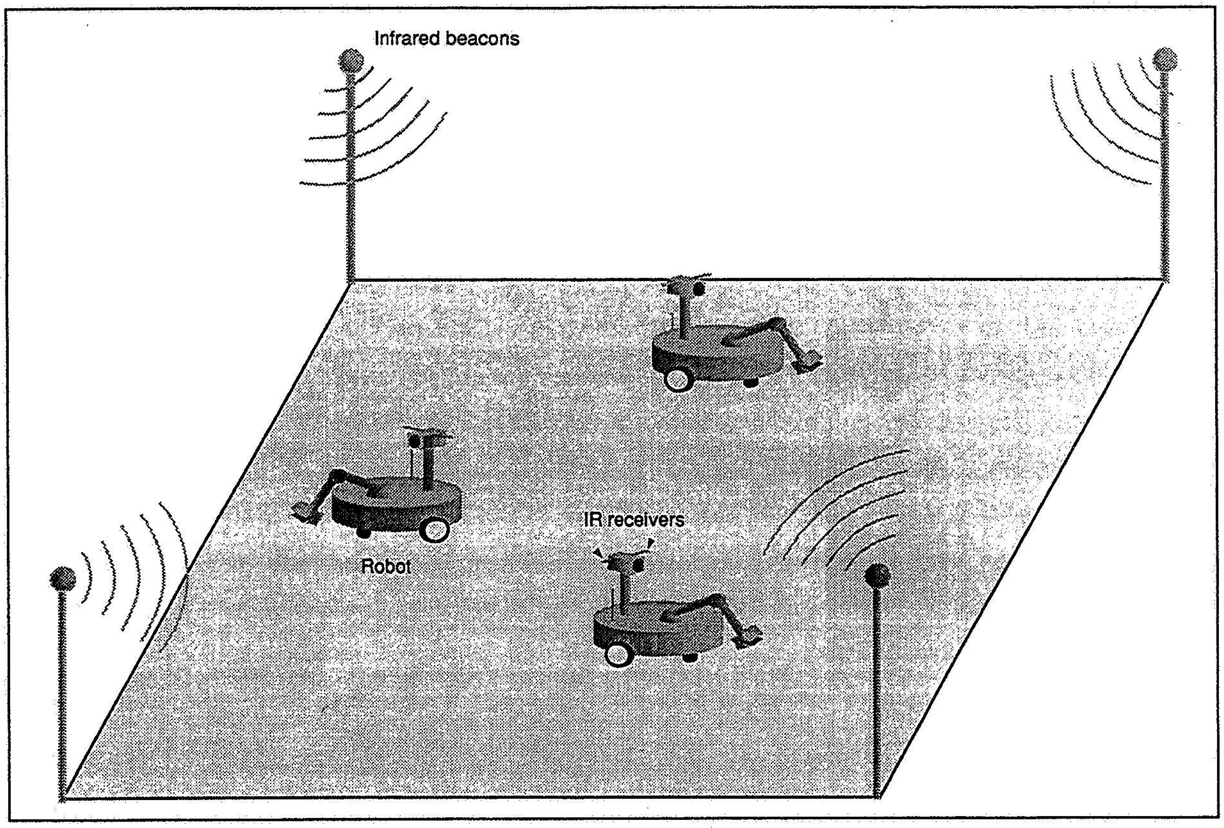

Fig 11.3 IR TROP system components and cooperating configuration

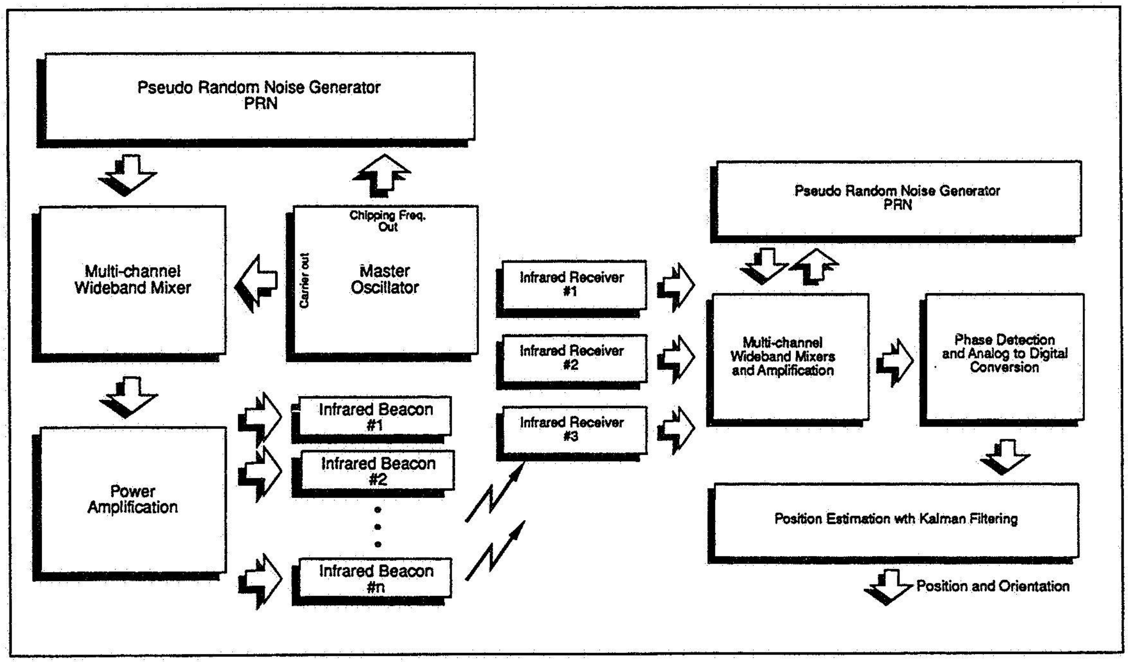

Fig 11.4 IR TROP system concept

S12-31
156102
P-5

500127

N93-29120

INDIGENOUS LUNAR CONSTRUCTION MATERIALS

Wayne P. Rogers and Stein Sture

The utilization of local resources for the construction and operation of a lunar base can significantly reduce the cost of transporting materials and supplies from Earth. This study investigates the feasibility of processing lunar regolith to form construction materials and structural components. A preliminary review of potential processing methods such as sintering, hot-pressing, liquification, and cast basalt techniques, has been completed.

The processing method proposed in this study is a variation on the cast basalt technique. It involves liquification of the regolith at 1200-1300°C, casting the liquid into a form, and controlled cooling. While the process temperature is higher than that for sintering or hot-pressing (1000-1100°C), this method is expected to yield a true engineering material with low variability in properties, high strength, and the potential to form large structural components.

A scenario for this processing method has been integrated with a design for a representative lunar base structure and potential construction techniques. The lunar shelter design is for a modular, segmented, pressurized, hemispherical dome which could serve as habitation and laboratory space. Based on this design, we have made estimates of requirements for power, processing equipment, and construction equipment. This proposed combination of material processing method, structural design, and support requirements will help to establish the feasibility of lunar base construction using indigenous materials.

Future work will refine the steps of the processing method. Specific areas where more information is needed are: furnace characteristics in vacuum; heat transfer during liquification; viscosity, pouring and forming behavior of molten regolith; design of high temperature forms; heat transfer during cooling; recrystallization of basalt; and refinement of estimates of elastic moduli, compressive and tensile strength, thermal expansion coefficient, thermal conductivity, and heat capacity.

The preliminary design of the lunar shelter showed us that joining is a critical technology needed for building a structure from large segments. The problem of joining is important to the design of any structure that is not completely prefabricated. It is especially important when the structure is subjected to tensile loading by an internal pressure. For a lunar shelter constructed from large segments the joints between these large segments must be strong, and they must permit automated construction. With a cast basalt building material which is brittle, there is the additional problem of connecting the joint with the material and avoiding stress concentration that would cause failure. Thus, a well-defined project which we intend to pursue during this coming year is the design of joints for cast basalt structural elements.

CAST MOLTEN REGOLITH

Key Data

- **Power:** 100 kW
- **Furnace efficiency:** 90%
- **Furnace capacity:** 3.6 m^3
- **Furnace weight:** 3 tons
- **Melt time:** 24 hrs
- **Regolith mass:** 6 tons
- **Structural element size:** 2 m^3
- **Form weight** (1 inch thick graphite)**:** 1 ton

Fig 12.1 Key data for cast molten regolith

	Cast Basalt	Concrete	Iron
Ultimate tensile strength (MPa)	36	6	367
Compressive strength (MPa)	550	76	510
Young's modulus (GPa)	110	21	196
Thermal expansion (/C)	7.8×10^{-7}	1.19×10^{-7}	1.2×10^{-5}
Density (g/cm^3)	2.9	2.4	7.8

Fig 12.2 Physical properties of basalt, concrete and iron

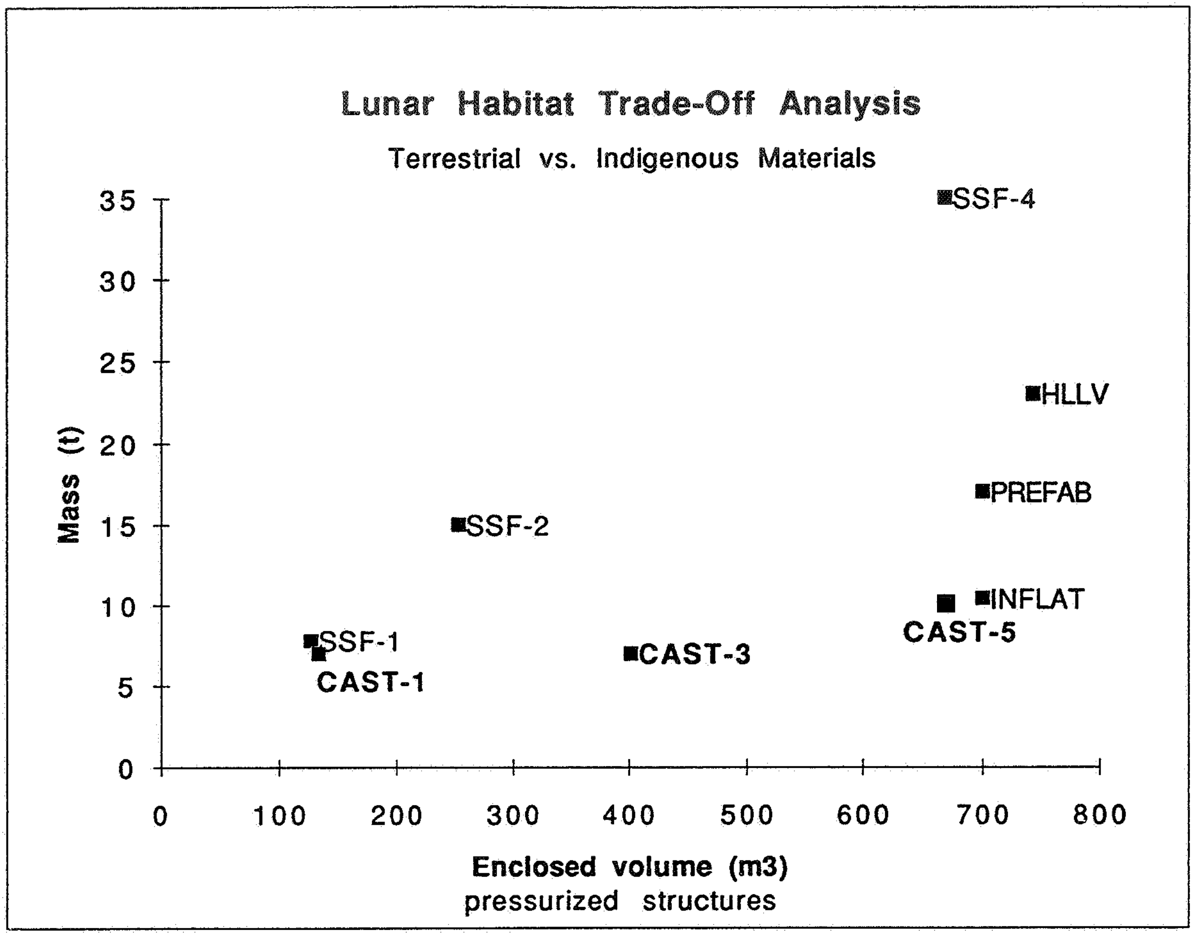

Abbreviation	Definition	Number of Airlocks	Description
SSF-1	Space Station Freedom Module	1	Cylinder: 4.5m diam. x 8m
CAST-1	1 cast basalt dome	1	Hemisphere: 8m diam.
SSF-2	2 SSF modules	2	
SSF-4	4 SSF modules	2	
INFLAT.	1 inflatible sphere	1	Sphere: includes support eqt.
PREFAB.	module requires assembly	1	Cylinder: 10.4m diam. x 8.2m
HLLV	heavy lift launch vehicle mod.	1	Cylinder: 7.6m diam. x 8.2m
CAST-5	5 cast basalt domes	2	
CAST-3	3 cast basalt domes	1	

Fig 12.3 Lunar habitat trade-off analysis for terrestrial vs. indigenous materials

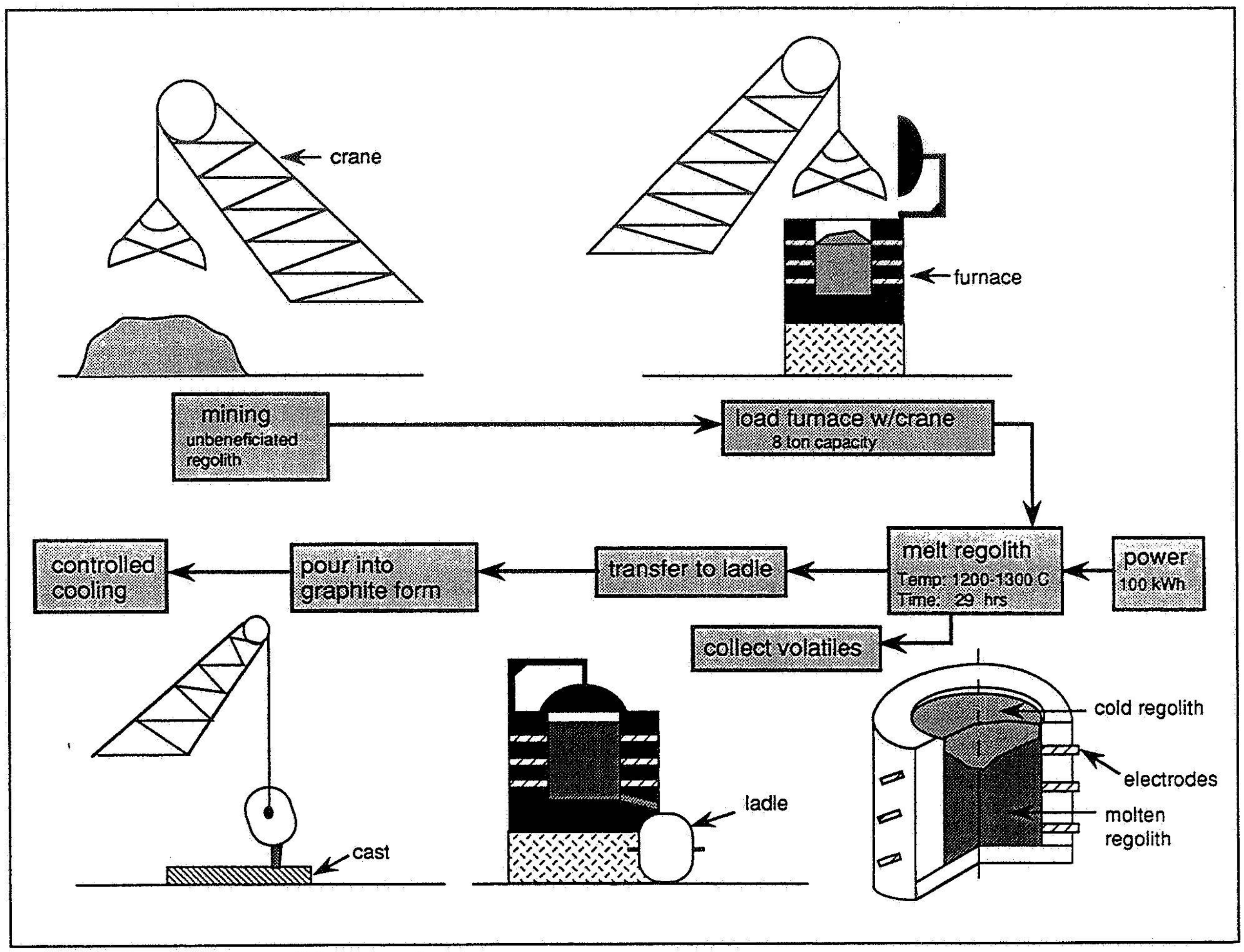

Fig 12.4 Cast molten regolith processing

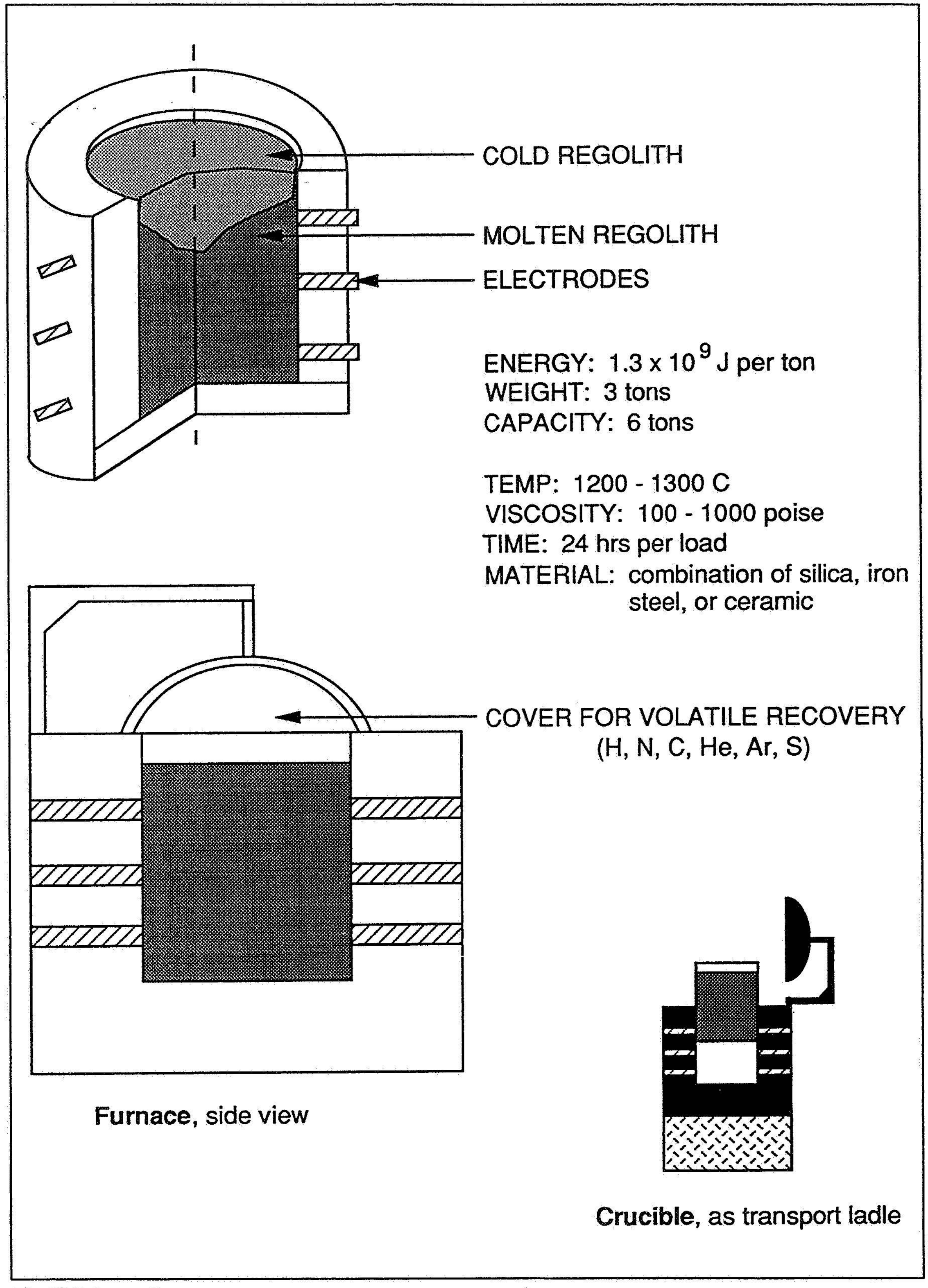

Furnace, side view

Crucible, as transport ladle

Fig 12.5 Lunar furnace concept

SYSTEMS ENGINEERING STUDIES OF LUNAR BASE CONSTRUCTION

George W. Morgenthaler

Many ingenious concepts have been proposed for lunar base construction, but few systematic studies exist which relate time-consistent lunar base construction technologies and the choice of lunar base approach with the long-term SEI objectives—i.e., lunar indigenous base construction and Mars Exploration equipment development.

To fill this gap, CSC has taken a two-pronged approach. First, the Center undertook basic geotechnical investigations of lunar soil, fabrication of a scale prototype of a lunar construction crane, a multi-robot construction team laboratory experiment, and a preliminary design of lunar base structures. Second, during June and July, 1991 two lunar base construction systems engineering studies were accomplished—a "near-term lunar base" study, and a "far-term lunar base" study. The goals of these studies were to define the major lunar base construction research problems in consistent technology/construction frameworks, and to define design requirements for construction equipment such as a lunar crane and a regolith mover.

The "near-term lunar base" study examined three different construction concepts for a lunar base comprised of pre-fabricated, pre-tested, Space Station Freedom-type modules, which would be covered with regolith shielding. Concept A used a lunar crane for unloading and transportation; concept B, a winch and cart; and concept C, a walker to move the modules from the landing site to the base site and assemble them. To evaluate the merits of each approach, calculations were made of mass efficiency measure, source mass, reliability, far-term base mass, Mars base mass, and base assembly time. The model thus established has also been used to define the requirements for crane speed and regolith mover m^3/sec. rates. A major problem addressed by this study is how to "mine" the regolith and stack it over the habitats as shielding.

To identify when the cost of using indigenous lunar materials to construct the base exceeds the cost of development and delivery of the equipment for processing lunar materials, a study of construction of a candidate sintered regolith "far-term lunar base" was undertaken. A technique was devised for casting slabs of sintered (basaltic) regolith and assembling these into a hemispherical (or geodesic) dome. The major problem occurs with the inner liner. At 14.7 psi and 20% oxygen internal atmosphere, the entire structure is in tension, even with the regolith load. Also, another study has indicated that at 14.7 psi major resupply of air will be needed because of leakage, and astronauts may have to engage in extensive pre-breathing and post-breathing for EVA tasks, thus detracting from useful mission work time. An alternative is to operate part of the base at, say, 5 psi and 70% oxygen, or to equip the astronauts with hard suits at 8.3 psi or greater. All of these choices directly influence base design and construction techniques.

S4-18
155104
P-3

500733

N93-29122

DESIGN OPTIMIZATION OF SPACE STRUCTURES

Carlos Felippa

This project investigates the topology-shape-size optimization of space structures through Kikuchi's homogenization method.

The method starts from a "design domain block," which is a region of space into which the structure is to materialize. This domain is initially filled with a finite element mesh, typically regular. Force and displacement boundary conditions corresponding to applied loads and supports are applied at specific points in the domain.

An optimal structure is to be "carved out" of the design under two conditions: (1) a cost function is to be minimized, and (2) equality or inequality constraints are to be satisfied. The "carving" process is accomplished by letting microstructure holes develop and grow in elements during the optimization process. These holes have a rectangular shape in two dimensions and a cubical shape in three dimensions, and may also rotate with respect to the reference axes. The properties of the perforated element are obtained through an homogenization procedure. Once a hole reaches the volume of the element, that element effectively disappears.

The project has two phases. In the first phase the method has been implemented as the combination of two computer programs: a finite element module, and an optimization driver. In the second part we plan to focus on the application of this technique to planetary structures.

The finite element part of the method has been programmed for the two-dimensional case using four-node quadrilateral elements to cover the design domain. An element homogenization technique different from that of Kikuchi and coworkers was implemented. The optimization driver is based on an augmented Lagrangian optimizer, with the volume constraint treated as a Courant penalty function. The optimizer has to be especially tuned to this type of optimization because the number of design variables can reach into the thousands. The driver is presently under development.

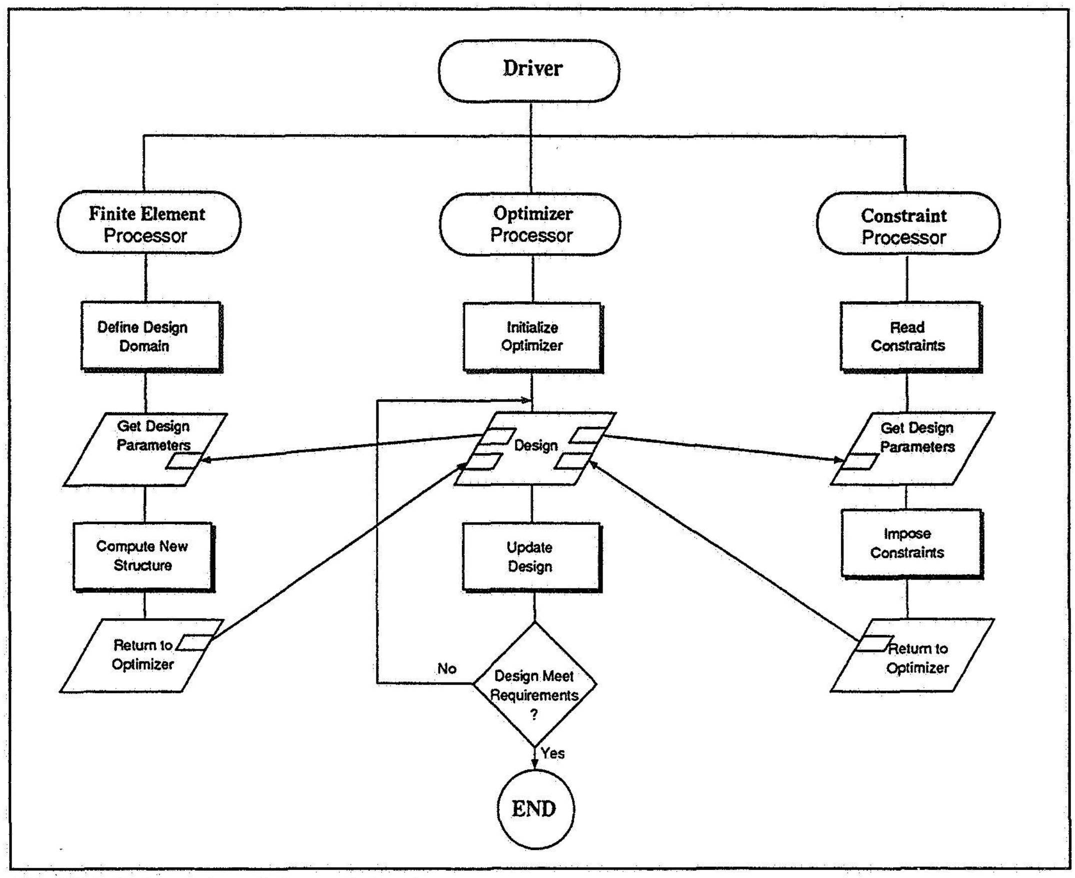

Fig 13.1 Schematics of the optimization program

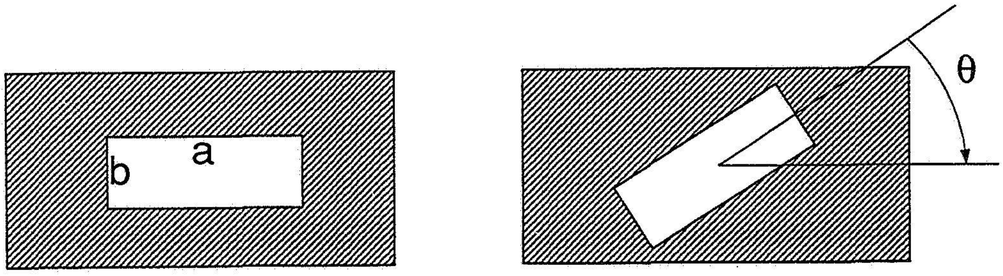

In two dimensions: a, b, θ in each element (3)

In three dimensions: a, b, c, θ_1, θ_2, θ_3 in each element (6)

100×100 2D mesh: 30,000 Design Variables

$30 \times 30 \times 30$ 3D mesh: 162,000 Design Variables

▷ Taking Advantage of Design-Variable Locality Essential

Fgi 13.2 Element-level design variables: micro-hole dimensions

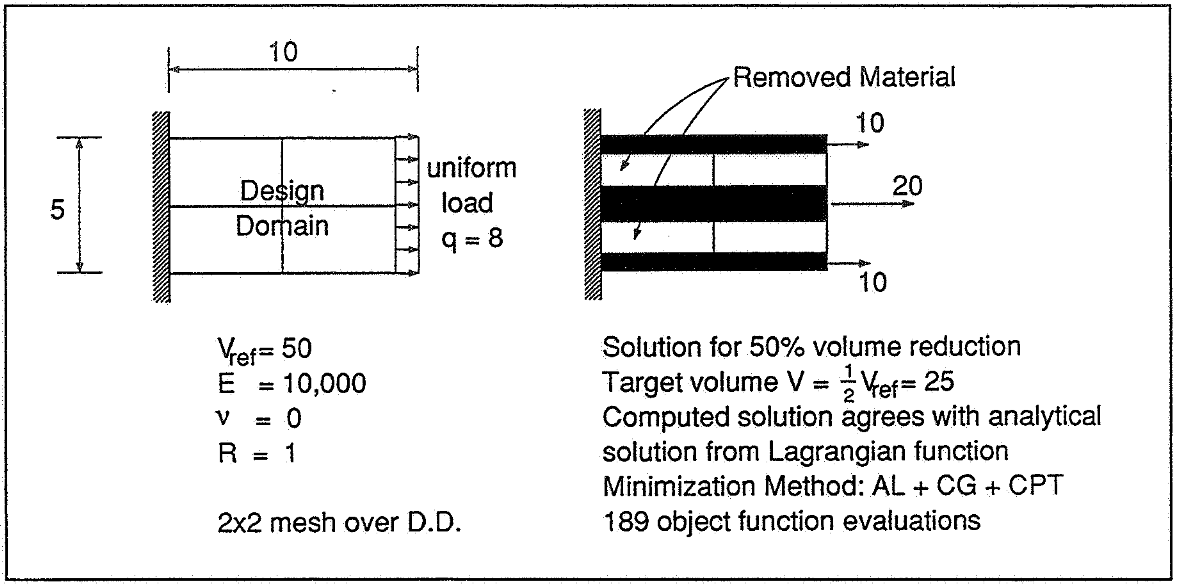

$V_{ref} = 50$
$E = 10{,}000$
$\nu = 0$
$R = 1$

2x2 mesh over D.D.

Solution for 50% volume reduction
Target volume $V = \frac{1}{2} V_{ref} = 25$
Computed solution agrees with analytical solution from Lagrangian function
Minimization Method: AL + CG + CPT
189 object function evaluations

Fig 13.3 First successful solution of the validation problem

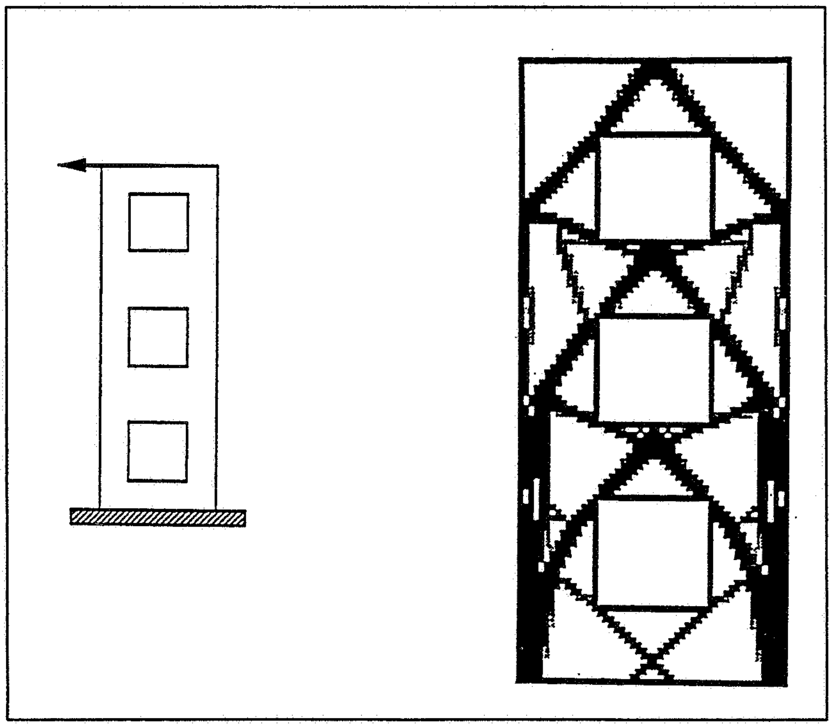

Fig 13.4 Example of predetermined holes which may be contained in the design domain

omit to
END

EDUCATIONAL PROGRESS

During the past year, 17 students associated with the Center received the BS degree, 7 received the MS, and 4 received the PhD. In the first three years of the Center, student participation was divided between graduates and undergaduates. The present emphasis—beginning in Spring 1991—is on graduate students.

BACHELOR OF SCIENCE

December 1990

Terri Martinez
Michael O'Shea
Lupita Sisneros

May 1991

Paul Carter
Kadett Chan
Ted Cobb
John Dorighi
Jack Hwang
Steve Maurich
Andrew Meiman
Alexander Montoya
Mark Nathan
Kendall Nii
David Pinter
Kenneth Rayment
Heather Sato
Robert M. Taylor

MASTER OF SCIENCE

December 1990

Janet Gleave
François Hemez
David Newell

May 1991

Cynthia Bingham
Chris Dalquist
Thomas Kohl
Jeffrey O'Brien

DOCTOR OF PHILOSOPHY

December 1990

Roger Davidson

May 1991

Ralph Quan
Herbert Schroeder

August 1991

James Wade

ORGANIZATION

PERSONNEL — RESEARCH

In the current program period the Center's research has been organized into two major projects: an orbital construction project and a planetary construction project. Each is composed of a number of tasks, listed below with the names of personnel currently involved in each task.

The Center's research is conducted by its faculty, research personnel and students, with guidance and direction from the Director and the Executive Committee. Weekly technical meetings are the forum for internal reporting on progress on the Center's several tasks. At these meetings both students, research professionals and faculty share results and engage in dialogue which guides future efforts.

As of October 31, 1991 the Center's research personnel included 13 faculty members, 3 postdoctoral research associates, 2 professional research assistants and 36 graduate and undergraduate students. Interaction between personnel engaged in the various tasks is good and continues to build.

ORBITAL CONSTRUCTION

Task: Interaction Dynamics of On-Orbit Construction
Personnel: K.C. Park, Prof
Renjeng Su, Prof
Charbel Farhat, Prof
Martin M. Mikulas, Jr., Prof
J.C. Chiou, Research Assoc.
Scott Alexander, Grad Student, RA

Task: Hybrid CMS Methods for Structural Assembly
Personnel: Charbel Farhat, Prof.
François Hemez, Grad Student
Russell Partch, Grad Student, RA
Paul Stern, Grad Student, RA

Task: Control of Interaction Dynamics of Orbital Assembly
Personnel: Renjeng Su, Prof
K.C. Park, Prof
Jim Chapel, Grad Student, RA

Task Controls for Space Structures
Personnel: Mark Balas, Prof
Ali Gooybadi, Grad Student, RA
Brian Reisenauer, Grad Student, Century XXI Fellow
L. Robbie Robertson, Grad Student, RA

Task: Structural Load Control During Construction
Personnel: Martin M. Mikulas, Jr., Prof
Chris Evans, Grad Student, RA
Robert Taylor, Grad Student, NASA Fellow
Greg Thorwald, Grad Student, RA
Peter Withnell, Grad Student, RA

Task: Systems Engineering Studies of On-Orbit Assembly Operation
Personnel: George W. Morgenthaler, Prof
Kadett Chan, Grad Student, RA
Steve Jolly, Grad Student, RA
Mike Loucks, Grad Student, Century XXI Fellow
Alex Montoya, Grad Student, RA

LUNAR CONSTRUCTION

Task: Lunar Regolith Densification
Personnel: Hon-Yim Ko, Prof
Stein Sture, Prof
Tyrone Carter, Grad Student
Kraig Evenson, Grad Student
Steven Perkins, Grad Student, RA

Task: Regolith-Structure Modeling
Personnel: Hon-Yim Ko, Prof
Stein Sture, Prof
Tyrone Carter, Grad Student
Kraig Evenson, Grad Student
Steven Perkins, Grad Student, RA

Task: Lunar Regolith Penetrators and Cutters
Personnel: Frank Barnes, Prof
Hon-Yim Ko, Prof
Stein Sture, Prof
Mark Nathan, Grad Student, RA

Task: Lunar Crane System
Personnel: Martin M. Mikulas, Jr., Prof
Renjeng Su, Prof
Li-Farn Yang, Research Assoc
Chris Evans, Grad Student, RA
Robert Taylor, Grad Student, NASA Fellow
Greg Thorwald, Grad Student, RA
Peter Withnell, Grad Student, RA

Task: Lunar Rovers and Local Positioning System
Personnel: James Avery, Prof
Renjeng Su, Prof
Chris Grasso, Grad Student, RA
Wayne Jermstad, Grad Student, RA
Mike Mathews, Grad Student, RA
Jane Pavlich, RA
Gary Snyder, Grad Student, Hourly

Task: Indigenous Lunar Construction Elements
Personnel: Wayne Rogers, Prof
Stein Sture, Prof
Martin M. Mikulas, Prof
Ann Campbell, Grad Student, RA
Andrew Wilson, Undergrad Student, Hourly

Task: Design of Lunar Shelters
Personnel: Kaspar Willam, Prof
John Happel, Grad Student, RA

Task: System Study of Lunar Bases
Personnel: George W. Morgenthaler, Prof
Kadett Chan, Grad Student, RA
Brent Helleckson, Grad Student, RA
Richard Johnson, Grad Student, RA
Mike Loucks, Grad Student, Century XXI Fellow
Alex Montoya, Grad Student, RA

Task: Design Optimization of Space Structures
Personnel: Carlos Felippa, Prof
Luis Crivelli, Research Assoc
David Vandenbelt, Grad Student, RA

PERSONNEL — ADMINISTRATION

Director:	Renjeng Su
Executive Committee:	Charbel Farhat Martin M. Mikulas, Jr. George W. Morgenthaler Stein Sture Renjeng Su
Assistant to the Director:	Carol Osborne
Professional Research Assistants:	Lisa Block Walter Lund
Staff Assistant:	Cindy Coffer
Student Assistants:	Laura Fields Kathleen Kryczka

BUDGET

The Center is funded by National Aeronautics and Space Administration Grant NAGW-1388, which is renewed annually. The University of Colorado provides matching funds. A summary of funding to date follows.

FUNDING TO DATE

Period	**Amount**
NASA, Program Period 1 (July 1, 1988 - February 28, 1989)	449,507
NASA, Program Period 2 (March 1, 1989 - February 28, 1990)	1,414,168
NASA, Program Period 3 (March 1, 1990 - February 28, 1991)	1,688,511
NASA, Program Period 4 (March 1, 1991 - October 31, 1991)	1,291,957
Subtotal	4,894,143
University of Colorado Matching Funds, FY 1988-1989	100,000
University of Colorado Matching Funds, FY 1989-1990	100,000
University of Colorado Matching Funds, FY 1990-1991	100,000
University of Colorado Matching Funds, FY 1991-1992	100,000
Subtotal	400,000
McDonnell Douglas Foundation Gifts, 1989 and 1990	7,000
Total	$5,301,143

Funding for Program Period Four, March 1, 1991 through October 31, 1992, is summarized below.

PERIOD FOUR FUNDING

	NASA	**UC Matching**
Salaries and Wages	677,211	
Fringe Benefits	83,388	
Computer Costs	1,541	
Materials, Supplies and Services	1,350	34,285
Capital Equipment	147,277	39,715
Tuition	58,863	
Indirect Costs	322,327	
Total	$1,291,957	$74,000

PUBLICATIONS

The following papers sponsored by CSC were presented at technical meetings or submitted for publication in 1991. CSC students defended the theses listed between November 1990 and October 1991. The "CSCR" number for a paper or thesis is its number in the Center for Space Construction Report Series.

"Compensation of Controller-Structure Interaction Using Adaptive Residual Model Filters", PhD Dissertation, Davidson, Roger E., Department of Aerospace Engineering Sciences, University of Colorado, December 1990

"Decision Model Development for the Evaluation and Selection of an Initial Lunar Base Concept", Master's Thesis, Gleave, Janet, Department of Aerospace Engineering Sciences, University of Colorado, December 1990

"Numerical Simulation of Large Actively Controlled Space Structures", PhD Dissertation, Quan, Ralph, Department of Aerospace Engineering Sciences, University of Colorado, May 1991

"DYCAM 1.0: Dynamic Construction Activity Model—A Decision Support Tool for Construction Planning", PhD Dissertation, Schroeder, Herbert, Department of Civil, Environmental and Architectural Engineering, University of Colorado, May 1991

"Assembly Interruptability Robustness Model with Application to Space Station Freedom", PhD Dissertation, Wade, James, Department of Aerospace Engineering Sciences, University of Colorado, August 1991

"Boundary Element Analysis of Small-Amplitude Fluid Oscillation in a Low-Gravity Environment", Master's Thesis, O'Brien, Jeffrey L., Department of Mechanical Engineering, University of Colorado, March 1991, Boulder, Colorado, CSCR.91.01

"Numerical Simulation of Large Actively Controlled Space Structures", PhD Dissertation, Quan, Ralph W., Aerospace Engineering Sciences, University of Colorado, April 1991, Boulder, Colorado, CSCR.91.02

"Pulse Propagation in a Laminated Composite Plate and Nondestructive Evaluation", Ju, T.H. and Subhendu K. Datta, Presented at Winter Meeting of the American Society of Mechanical Engineers, November 1991, Atlanta, Georgia, CSCR.91.03

"Launch Facility Constraints on the Space Exploration Initiative", Chan, Kadett and Alex J. Montoya, To be presented at Space 92 Conference, American Society of Civil Engineers, May 31 - June 4, 1992, Denver, Colorado, CSCR.91.04

"A Simulation of Operations (SIMOP) Model for Shuttle Logistic Support of Space Construction Projects", Chan, Kadett and Kendall Nii, Presented at AIAA 4th Annual Logistics Symposium, November 1991, Cocoa Beach, Florida, CSCR.91.05

"Coupled Stability Characteristics of Nearly Passive Robots", Chapel, Jim D. and Renjeng Su, To be presented at IEEE Automation and Robotics Conference, May 1992, Nice, France, CSCR.91.06

"Using Simulation as a Tool for Evaluating On-Orbit Assembly Support Equipment", D'Amara, Mark L. and George W. Morgenthaler, Presented at AIAA 4th Annual Logistics Symposium, November 1991, Cocoa Beach, Florida, CSCR.91.07

"Lunar Module Unloader: A Conceptual Design", Evans, G.C. and M. M. Mikulas, Jr., September 1991, CSCR.91.08

"Modular Robot Testbed", Grasso, Chris, Wayne Jermstad, Mike Mathews, Jane Pavlich and Jim Avery, To be presented at Space 92 Conference, American Society of Civil Engineers, May 31 - June 4, 1992, Denver, Colorado, CSCR.91.09

"Prototype Lunar Base Construction Using Indigenous Materials", Happel, John Amin, Kaspar Willam and Benson Shing, To be presented at Space 92 Conference, American Society of Civil Engineers, May 31 - June 4, 1992, Denver, Colorado, CSCR.91.10

"Evaluating Lunar Base Conceptual Designs", Helleckson, Brent, Richard Johnson and George W. Morgenthaler, To be presented at Space 92 Conference, American Society of Civil Engineers, May 31 - June 4, 1992, Denver, Colorado, CSCR.91.11

"Application of Expert System Modeling to Space-Based Construction and Manufacturing", Jolly, Steve, Presented at 10th Biennial SSI/Princeton Conference on Space Manufacturing, May 1991, Princeton, New Jersey, CSCR.91.12

"Orbital Construction of a NTR Mars Transfer Vehicle", Jolly, Steve, Mike Loucks and George W. Morgenthaler, To be presented at Space 92 Conference, American Society of Civil Engineers, May 31 - June 4, 1992, Denver, Colorado, CSCR.91.13

“Space-Based Assembly Sequence Formulation for Evaluation of Large Orbital Assemblies”, Jolly, Steve, To be presented at Space 92 Conference, American Society of Civil Engineers, May 31 - June 4, 1992, Denver, Colorado, CSCR.91.14

“Analysis of Low Effective Stress Characteristics of Granular Materials in Reduced Gravity”, Macari-Pasqualino, Emir J., Stein Sture and Kenneth Runesson, Presented at ASCE Geotechnical Engineering Congress”, June 1991, Boulder, Colorado, CSCR.91.15

“Development Testing, Non-Destructive Evaluation and Check-out in Space Construction and Its Impact on Space Logistics Support”, Morgenthaler, George W. and Rosario Nici, Presented at AIAA 4th Annual Logistics Symposium, November 1991, Cocoa Beach, Florida, CSCR.91.16

“Launch Vehicle Selection and Launch Facility Sizing Models for SEI Logistics Support”, “Morgenthaler, George W. and Alex J. Montoya, Presented at AIAA 4th Annual Logistics Symposium, November 1991, Cocoa Beach, Florida, CSCR.91.17

“Engineering Properties of Lunar Regolith and Their Impact on Mining”, Perkins, Steve, Stein Sture, Frank Barnes and Hon-Yim Ko, Presented at International Symposium on Mine Mechanization and Automation, June 1991, Golden, Colorado, CSCR.91.18

“Evaluation of Plastic Bifurcation for Plane Strain Versus Axisymmetry”, Peric, Dunja, Kenneth Runesson and Stein Sture, To be published in Journal of Engineering Mechanics, ASCE, March 1992, , CSCR.91.19

“Construction of a Far-Term (2020+ AD) Lunar Base”, Wade, James, George W. Morgenthaler, Alex J. Montoya, Ann Campbell, To be presented at Space 92 Conference, American Society of Civil Engineers, May 31 - June 4, 1992, Denver, Colorado, CSCR.91.20

“Mechanism Synthesis, Dynamics and Control Designs of an Active Three Cable Lunar Crane”, Yang, Li-Farn and Martin M. Mikulas, Jr., Submitted to 33rd Structures, Structural Dynamics and Materials Conference, AIAA, April 1992, Dallas, Texas, CSCR.91.21

“Stability and 3-D Spatial Dynamics Analysis of a Three Cable Crane”, Yang, Li-Farn, Martin M. Mikulas Jr. and Jin-Chern Chiou, Submitted to 33rd Structures, Structural Dynamics and Materials Conference, AIAA, April 1992, Dallas, Texas, CSCR.91.22

"A Cost Trade-off Model for On-Orbit Assembly Logistics", Morgenthaler, George W., Presented at AIAA 4th Annual Logistics Symposium, November 1991, Cocoa Beach, Florida, CSCR.91.23

"Finite Element with Inner Softening Band", Sture, Stein, Marek Klisinski and Kenneth Runesson, ASCE Journal of Engineering Mechanics, Vol. 117, No. 3, March 1991, pp 576-588.

"Finite Element Analysis of Boundary Value Problems Involving Strain Localization", Peric, Dunja, Stein Sture and Kenneth Runesson, *Constitutive Laws for Engineering Materials*, ASME Press, 1991, pp 759-767.

CONFERENCES AND MEETINGS

During the period November 1, 1990 to October 31, 1991, Center for Space Construction personnel attended the following conferences and technical meetings.

International Conference on Constitutive Modeling of Engineering Materials, Tucson, AZ, January 1991

American Aeronautical Society Guidance and Control Conference, Keystone, CO, February 1990

ASCE Structural Engineering Congress, Indianapolis, IN, April-May 1991

Fifth SIAM Conference on Domain Decomposition Methods for Partial Differential Equations, Philadelphia, PA, May 1991

Tenth Biennial Conference on Space Manufacturing, Princeton, NJ, May 1991

ASCE Engineering Mechanics Specialty Conference, Columbus, OH, May 1991

ASCE Geotechnical Engineering Congress, Boulder, CO, June 1991

International Symposium on Mine Mechanization and Automation, Golden, CO June 1991

International Conference on Centrifuge Modeling, Boulder, CO, June 1991

Third Conference on Nondestructive Evaluation for Aerospace Requirements, Huntsville, AL, June 1991

Canadian Congress on Applied Mechanics, Winnipeg, Canada, June 1991

Space Cryogenics Workshop, Lewis Research Center, June 1991

Cryogenic Engineering and International Cryogenic Materials Conference, Huntsville, AL, June 1991

BEMS Meeting, Salt Lake City, UT, June 1991

IAA Conference, Cologne, Germany, June 1991

MIT Controlled Structures Technology Center Symposium, Cambridge, MA, July 1991

First U.S. National Congress on Computational Mechanics, July 1991

Air Canada Airshow and Aerospace Conference, Vancouver, Canada, August 1991

IAA/IAF/AIAA 42nd World Astronautics Conference, Montreal, Canada, October 1991